N00164.AR.000878
NSWC CRANE
5090.3a

Resource Conservation and Recovery Act Facility Investigation Report for Round 1 and Round 2 Field Work

at

Mine Fill B (SWMU 13) and Cast High Explosives Fill/ Building 146 Incinerator (SWMU 16)

VOLUME II - APPENDICES A - C

Naval Surface Warfare Center Crane

Crane, Indiana

NAVFAC
Naval Facilities Engineering Command

Southern Division
Naval Facilities Engineering Command

Contract Number N62467-94-D-0888
Contract Task Order 0279

July 2004

APPENDIX A
PHOTOGRAPHS OF SWMU 13 AND SWMU 16
SURVEYED SAMPLE LOCATIONS
ROUND 1

APPENDIX A.1
FIGURE A-1 AND
PHOTOGRAPHS OF SWMU 13
ROUND 1

/GIS/NSWC_CRANE/APR/SWMU13_16.APR SWMU 13 PHOTOGRAPH DIRECTION LAYOUT 8/20/03 KMP

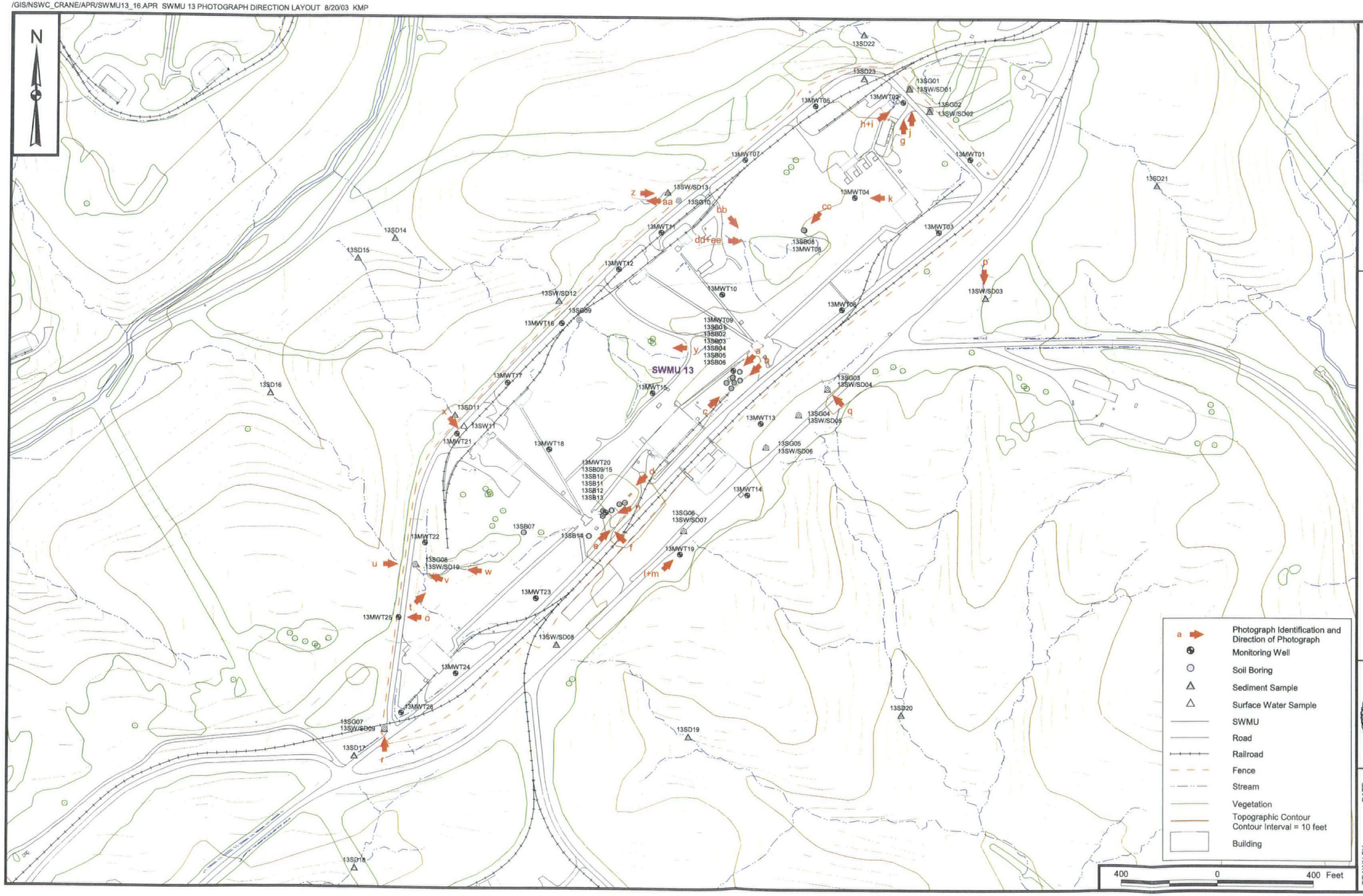

CONTRACT NO. 9060

APPROVED BY ___ DATE ___

APPROVED BY ___ DATE ___

DRAWING NO. FIGURE A - 1

REV 0

PHOTOGRAPH DIRECTION MARKERS AND SURVEYED LOCATIONS
MINEFILL B - SWMU 13
NSWC CRANE
CRANE, INDIANA

DRAWN BY A. JANOCHA DATE 6/26/03

CHECKED BY J. LUCAS DATE 6/26/03

COST/SCHED-AREA

SCALE AS NOTED

FIGURE A-1 PHOTOGRAPHS

SITE PHOTOGRAPHS
SWMU 13 – MINE FILL B
NSWC CRANE
CRANE, INDIANA

Figure A-1a- View southwest showing the former location of the Therminol Boiler Building in the vicinity of Building 166.

Figure A-1b - Close up view of Figure A-1a -showing soil boring locations 13SB04 (to the left), 13SB06 (back center of photo), and 13SB05 (to the right).

Figure A-1c - View northeast showing the former location of the Therminol Boiler Building in the vicinity of Building 166.

Figure A-1d - View southwest showing the former location of the Therminol Boiler Building in the vicinity of Building 171.

Figure A-1e - View northeast showing the former location of the Therminol Boiler Building in the vicinity of Building 171 with soil boring 13SB11 located at approximately the center of the photograph.

Figure A-1f - View northwest showing the downgradient side of the former location of the Therminol Boiler Building in the vicinity of Building 171 with soil boring 13SB09 located in the front and 13SB10 located in the background of the photograph.

Figure A-1g - View north of rotosonic rig drilling at monitoring well location 13MWT02.

Figure A-1h - View northeast showing the mud tub set up during the rock coring at 13MWT02.

Figure A-1i - Soil cores from 13MWT02 showing yellow orange clayey silt (5- to 7-foot interval) overlying the light gray/gray siltstone (7- to 17-foot interval).

Figure A-1j - View north of drillers finishing the installation of monitoring well 13MWT02.

Figure A-1k - View west of rotosonic rig drilling at monitoring well location 13MWT04.

Figure A-1l - View northeast of rotosonic rig drilling at monitoring well location 13MWT19.

Figure A-1m - Soil core from 13MWT19 showing mottled clayey silt at the 0- to 4- foot interval.

Figure A-1n - View southwest of rotosonic rig drilling at monitoring well location 13MWT20 near soil boring 13SB09 as presented in Figure A-1f.

Figure A-1o - View west of monitoring well 13MWT25 awaiting cleanup and yellow traffic paint.

Figure A-1p - View south of surface water and sediment sampling location 13SW/SD03 in a small intermittent stream or drainage ditch in a maintained grassy area.

Figure A-1q - View northwest of surface water and sediment sampling location 13SW/SD04 collected just below the wooden stake and the paint markings for staff gauge No. 3 (SG-03) on the near culvert concrete structure.

Figure A-1r - View north of surface water and sediment sampling location 13SW/SD09 and staff gauge location No. 7 (SG-07) marked on the top of the culvert's concrete structure.

Figure A-1t - View northeast of the southernmost woodlot within the boundary of SWMU 13.

Figure A-1u - View east of the same southernmost woodlot shown in Figure A-1t. This view reveals the the riparian nature of the woodlot.

Figure A-1v - View northwest of surface water and sediment sampling location 13SW/SD10 and staff gauge location No. 8 (SG-08) marked on the top of the culvert's stone structure.

Figure A-1w - View west of the same southernmost woodlot shown in Figure A-1t. This view also reveals the woodlot's riparian nature as well as the widest point in the intermittent stream.

Figure A-1x - View southeast of surface water sampling location 13SW/SD11. The sediment sample was collected further downstream (to the northwest) and outside of the SWMU's boundary.

Figure A-1y - View west showing the central woodlot within the boundary of SWMU 13. This woodlot has an intermittent stream running to its north and through its center.

Figure A-1z - View east showing culvert (about 4 feet in diameter) that drains the northernmost riparian woodlot within the boundary of SWMU 13. Also, the surface water and sediment sample was collected on the downstream side of the aquatic pool shown in this photograph.

Figure A-1aa - View west showing downstream of the discharge pipe and pool as shown in Figure A-1z.

Figure A-1bb - View southeast of the northernmost woodlot within the boundary of SWMU 13.

Figure A-1cc - View southwest of the northernmost woodlot behind completed monitoring well 13MWT08. This photograph also shows completed site restoration at this location. Site restoration included the filling of ruts with top soil, tamping, seeding, and the spreading of hay straw to protect the seed.

Figure A-1dd - View east of the same northernmost woodlot shown in Figure A-1bb. This view shows the intermittent stream's drainage pattern downgradient of the woodlot.

Figure A-1ee - Same view as Figure A-1dd except the discharge culvert is shown with more of the intermittent stream's drainage pattern.

APPENDIX A.2
FIGURE A-2 AND
PHOTOGRAPHS OF SWMU 16
ROUND 1

P:\GIS\NSWC_CRANE\APR\SWMU13_16.APR SWMU 16 PHOTOGRAPH DIRECTION LAYOUT 8/22/03 KMP

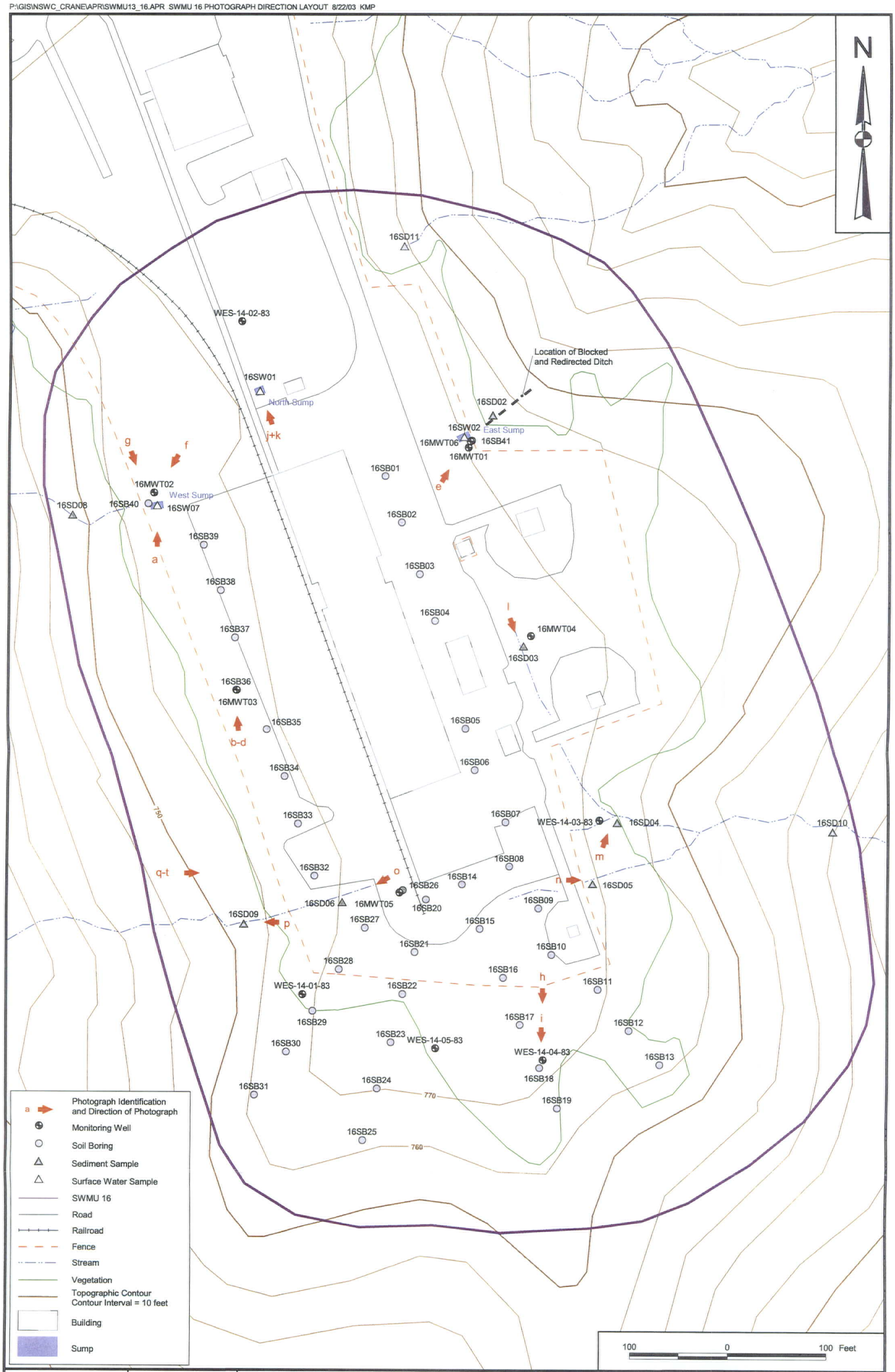

DRAWN BY A. JANOCHA	DATE 6/26/03	PHOTOGRAPH DIRECTION MARKERS AND SURVEYED SAMPLE LOCATIONS CAST HIGH EXPLOSIVES FILL/B146 INCINERATOR (SWMU 16) NSWC CRANE CRANE, INDIANA	CONTRACT NUMBER 9060
CHECKED BY J. LUCAS	DATE 6/26/03		APPROVED BY — DATE —
COST/SCHEDULE-AREA			APPROVED BY — DATE —
SCALE AS NOTED			DRAWING NO. FIGURE A - 2 REV 0

FIGURE A-2 PHOTOGRAPHS

SITE PHOTOGRAPHS
SWMU 16 – CAST HIGH EXPLOSIVES FILL/B146 INCINERATOR
NSWC CRANE
CRANE, INDIANA

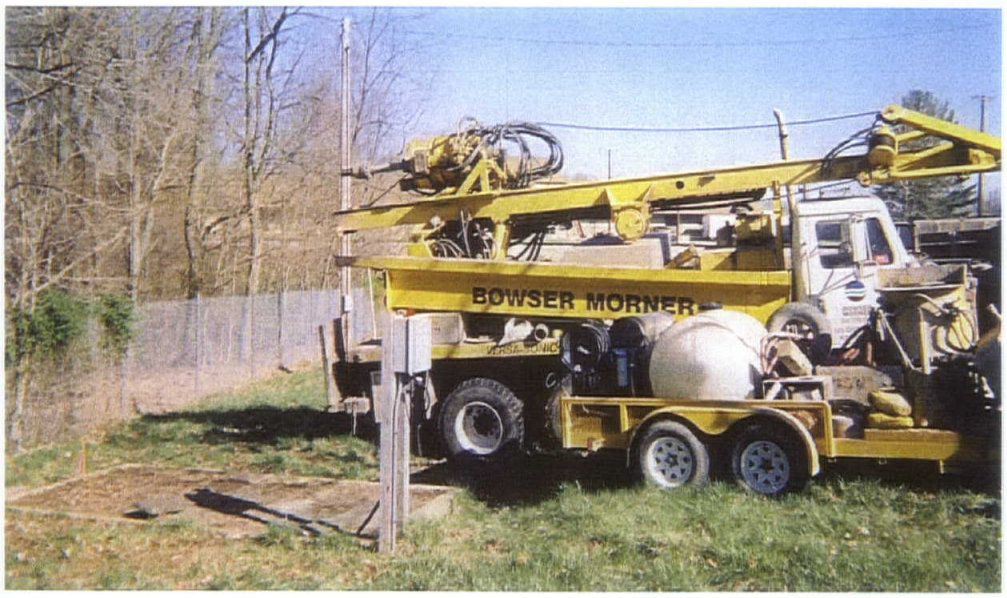

Figure A-2a - View north showing rotosonic rig setting up at monitoring well location 16MWT02.

Figure A-2b - View north of drillers installing PVC at monitoring well location 16MWT03.

FIGURE A-2 PHOTOGRAPHS

SITE PHOTOGRAPHS
SWMU 16 – CAST HIGH EXPLOSIVES FILL/B146 INCINERATOR
NSWC CRANE
CRANE, INDIANA

Figure A-2c - Soil cores from 16MWT03 showing yellow orange sandstone overlying gray shale.

Figure A-2d - View north showing drillers finishing up monitoring well installation at 16MWT03.

Figure A-2e - View northeast of the eastern sump where surface water sample 16SW02 was collected. Also shown are monitoring wells 16MWT01 (foreground and painted) and 16MWT06 (background and unpainted). Note that site restoration was completed at this location.

Figure A-2f - View southwest showing monitoring well 16MWT02 and the western sump where surface water sample 16SW07 was collected.

Figure A-2g - View south-southeast with monitoring well 16MWT02 and the western sump in the foreground and monitoring well 16MWT03 in the background.

Figure A-2h - View south of the former location of the incinerator ash piles with existing monitoring well WES-14-04-83 in the background.

Figure A-2i - View south showing the new well pad installed at existing monitoring well WES-14-04-83.

Figure A-2j - Photograph showing the northernmost sump where surface water sample 16SW01 was collected.

Figure A-2k - Photograph showing a close up of the northernmost sump's discharge pipe where frogs (spring peepers) are gathering.

Figure A-2l - View south-southeast showing the drainage ditch on the eastern side of SWMU 16 where sediment sample 16SD03 was collected.

Figure A-2m - View northeast showing the drainage ditch on the southeastern side of SWMU 16 where sediment sample 16SD04 was collected.

Figure A-2n - View east showing the drainage ditch on the southeastern side of SWMU 16 where sediment sample 16SD05 was collected.

Figure A-2o - View west showing the drainage ditch on the southwestern side of SWMU 16 where sediment sample 16SD06 was collected.

Figure A-2p - View west farther down the drainage ditch on the southwestern side of SWMU 16 - downgradient of 16SD06 and approximately 50 feet upgradient of where sediment sample 16SD09 was collected.

Figure A-2q - View east of metal debris and drum just north of 16SD09.

Figure A-2r - Close up of drum shown in Figure A-2q. Drum was empty except for dried leaves and twigs.

Figure A-2s - Close up of drum shown in Figure A-2q and its identification.

Figure A-2t - Close up of second drum found in the same vicinity as the first drum shown in Figure A-2q. This drum was also empty except for dried leaves and twigs.

APPENDIX B
SWMU 13 AND SWMU 16 BORING LOGS, MONITORING WELL CONSTRUCTION DIAGRAMS AND RELATED MATERIALS ROUND 1 AND ROUND 2

APPENDIX B.1.1
SWMU 13 BORING LOGS AND MONITORING WELL CONSTRUCTION DIAGRAMS
ROUND 1

Tetra Tech NUS, Inc.

BORING LOG

PROJECT NAME: NSWC CRANE
PROJECT NUMBER: N9060 CTO 0279
DRILLING COMPANY: BOWSER MORNER
DRILLING RIG: ROTOSONIC

BORING NUMBER: 13MWT01
DATE: 3/30/03
GEOLOGIST: BOB BALKOVEC
DRILLER: DAVE S.

Sample No. and Type or RQD	Depth (Ft.) or Run No.	Blows / 6" or RQD (%)	Sample Recovery / Sample Length	Lithology Change (Depth /Ft.) or Screened Interval	MATERIAL DESCRIPTION: Soil Density/ Consistency or Rock Hardness	Color	Material Classification	USCS*	Remarks	PID/FID Reading (ppm): Sample	Sampler BZ	Borehole**	Driller BZ**
	1					BR	2" TOP SOIL	ML	5" 0-6'	0.0			
	2					↓	↓						
	3				DRY	YELL	2'-6' CLAYEY SILT						
	4					OR &							
S-1 1125	5		4.9' / 5'			LT. GRAY						0.0	0.0
	6					YELLOW & LT. GRAY	CLAYEY SILT			0.0			
	7				MOIST	BR &	6'-9.5' SILTY SAND	SM	WEATHERED S.S.				
	8					YELL OR							
	9												
S-2 1145	10		4.8' / 5'		HARD DRY		5' SANDSTONE	BR	ROCK @ 9.5'				
	11					LT GRAY	WL @ 6' BGS						
	12						5" REAM TO 15'						
R-1	13						SANDY MATERIAL						
	14						IN CUTTINGS						
	15					OR GRAY	SILTY MATERIAL						
				T.D. 15'			WELL SET @ 15' 2" PVC						
							SCREENED 5'-15'						
							SAND TO 3'						
							BENT TO 1'						

* When rock coring, enter rock brokeness.

** Include monitor reading in 6 foot intervals @ borehole. Increase reading frequency if elevated reponse read.

Remarks:

Drilling Area Background (ppm): 0.0

Converted to Well: Yes X No

Well I.D. #: 13MWT01

Tetra Tech NUS, Inc.

BEDROCK
MONITORING WELL SHEET

WELL No.: 13MW101

PERMIT No:

PROJECT:	NSWC CRANE	DRILLING Co.:	BOWSER MORNER	BORING No.:	13MW101
PROJECT No.:	9060 CTO 0279	DRILLER:	DAVE S	DATE COMPLETED:	3/30/03
SITE:	SWMU 13	DRILLING METHOD:	ROTOSONIC	NORTHING:	1310541.574
GEOLOGIST:	B. BALKOVEC	DEV. METHOD:	WHALE PUMP	EASTING:	3025015.943

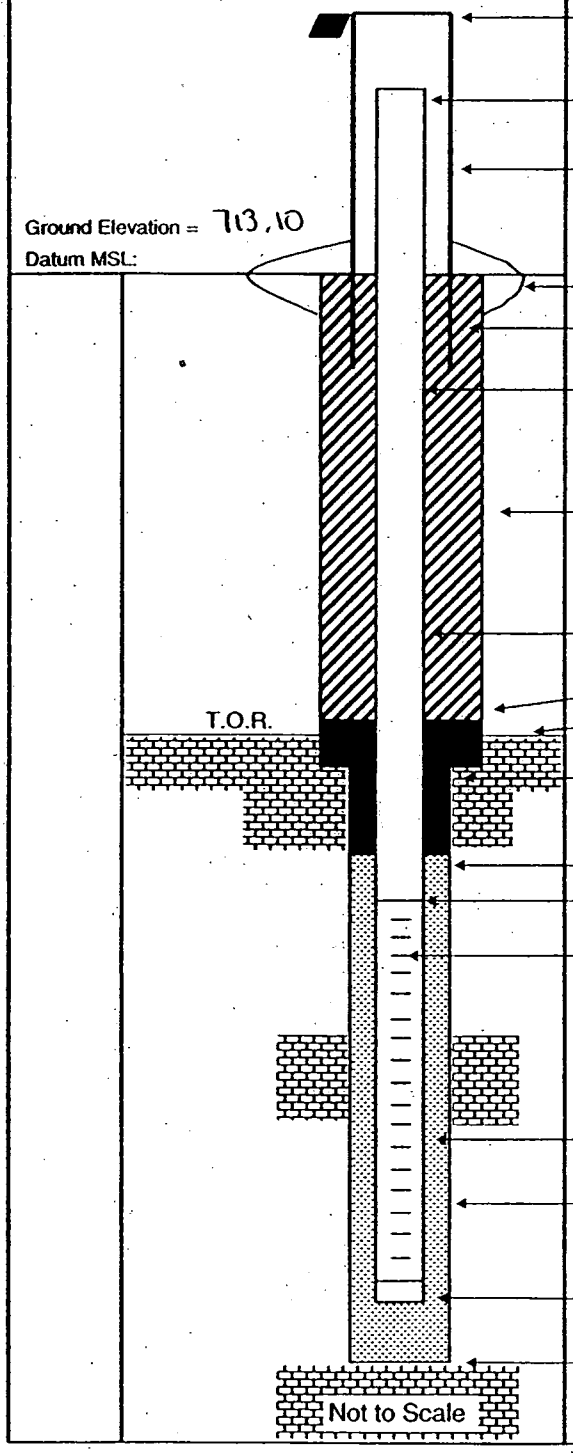

Elevation of Top of Casing: 715.91

Stick Up of Casing Above Ground Surface: 2.24'

Elevation of Top of Riser: 715.34

I.D. of Surface Casing: 4" SQUARE

Type of Surface Casing: STEEL

Type of Surface Seal: 4'x4'x6" PAD

I.D. of Permanent Casing: NA

I.D. of Riser: 2"

Type of Riser: PVC

Borehole Diameter: 5"

Type of Backfill: GROUT

Elevation / Depth Top of Seal: 712.1 / 1'

Elevation / Depth Top of Bedrock: 702.6 / 9.5'

Type of Seal: BENT CHIPS

Elevation / Depth of Top of Filter Pack: 710.1 / 3'

Elevation / Depth of Top of Screen: 708.1 / 5'

Type of Screen: PVC

Slot Size x Length: .20 x 10'

I.D. of Screen: 2"

Type of Filter Pack: No. 20-40 SAND

Diameter of Hole in Bedrock: Core / ~~Ream~~ 5"

Elevation / Depth of Bottom of Screen: 698.10 / 15'

Elevation / Total Depth of Borehole: 698.10 / 15'

Tetra Tech NUS, Inc.

BORING LOG

PROJECT NAME: NSWC CRANE
PROJECT NUMBER: N9060 CTO 0279
DRILLING COMPANY: BOWSER MORNER
DRILLING RIG: Roto Sonic

BORING NUMBER: 13MW102
DATE: 3/29/03
GEOLOGIST: BOB BALKOVEC
DRILLER: DAVE S.

Sample No. and Type or RQD	Depth (Ft.) or Run No.	Blows / 6" or RQD (%)	Sample Recovery / Sample Length	Lithology Change (Depth /Ft.) or Screened Interval	MATERIAL DESCRIPTION: Soil Density/ Consistency or Rock Hardness	Color	Material Classification	USCS *	Remarks	PID/FID Reading (ppm): Sample	Sampler BZ	Borehole**	Driller BZ**
	1					BR	TOP .5' TOP SOIL	ML	6" TO 7'	0.0			
	2						.5-3' SANDY SILT W/ S.S		FILL				
	3						FRAGS						
	4					YELL BR	3'-5' CLAYEY SILT		MOTTLED				
S-1 1030	5		4.7 / 5'			LT. GRAY						0.0	0.0
	6				DRY +		5'-7' SILT W/ SOME	ML		0.0			
S-2 1035	7		2' / 2'		STIFF		CLAY		REFUSAL 7'				
	8				HARD +	GRAY	7'-10' SILT STONE		THIN LAM.				
	9		70% RQD		DRY	BR							
C-1	10		C130			GRAY			ROCK @ 7'				
	11				SOFT +				POSS HOLE @ 11'				
	12		5' / 5'		MOIST								
	13				SOFT	GRAY	SHALE 12-13.5'						
	14		60% RQD				SILTSTONE 13.5'-15.5'		THIN LAM.				
C2	15		C149	COAL			COAL SEAM (14'-14.5')						
	16				HARD		SANDSTONE 15.5'	BR					
	17		4.5' / 5'						@ 17' WL=16.7' BGS				
	18								AFTER 2 HRS.				
	19		60% RQD						FRACT 17'-18'				
C3	20		C137						STAINING @ 19.5'				
	21								FRACT 19.5'-20'				
	22		5' / 5'						FRACT 22'-23.5'				
	23						22'-23.5' SANDSTONE	BR					
	24												
C4	25		C152		SOFT	DK GRAY	INTERBEDDED SHALE & SS	BR	POSS WATER ZONE				

* When rock coring, enter rock brokeness.

** Include monitor reading in 6 foot intervals @ borehole. Increase reading frequency if elevated reponse read.

Remarks:

Drilling Area Background (ppm): 0.0

Converted to Well: Yes X No ____ Well I.D. #: 13MW102

Tetra Tech NUS, Inc.

BORING LOG

PROJECT NAME: NSWC CRANE
PROJECT NUMBER: N9060 CTO 0279
DRILLING COMPANY: BOWSER MORNER
DRILLING RIG: Rotosonic

BORING NUMBER: 13MW02
DATE: 3/2/03
GEOLOGIST: BOB BALKOVEC
DRILLER: DAVE S.

Sample No. and Type or RQD	Depth (Ft.) or Run No.	Blows / 6" or RQD (%)	Sample Recovery / Sample Length	Lithology Change (Depth /Ft.) or Screened Interval	MATERIAL DESCRIPTION: Soil Density/ Consistency or Rock Hardness	Color	Material Classification	USCS*	Remarks	PID/FID Reading (ppm): Sample	Sampler BZ	Borehole**	Driller BZ**
L4	26		50%		SOFT	DK	INTERBEDDED	FRR		0.0	0.0		
↓	27		RQD		↓	GRAY	SHALE + S.S	↓		↓	↓		
				T.D. 27'									
							WELL SET @ 27' 2" PVC						
							SCREENED 17'-27'						
							SAND TO 15'						
							BENT TO 13'						
							VOL. CLAY TO 4'						

* When rock coring, enter rock brokeness.

** Include monitor reading in 6 foot intervals @ borehole. Increase reading frequency if elevated reponse read.

Drilling Area Background (ppm): 0.0

Remarks:

Converted to Well: Yes x No _____ Well I.D. #: 13MW02

Tetra Tech NUS, Inc.

BEDROCK MONITORING WELL SHEET

WELL No.: 13MW702

PERMIT No:

PROJECT:	NSWC CRANE	DRILLING Co.:	BOWSER MORNER	BORING No.:	13MW702
PROJECT No.:	9060 CTO 0279	DRILLER:	DAVE S.	DATE COMPLETED:	3/24/03
SITE:	SWMU 13	DRILLING METHOD:	ROTOSONIC	NORTHING:	1310776.555
GEOLOGIST:	B. BALKOVEC	DEV. METHOD:	BAILER S. STEEL	EASTING:	3024743.547

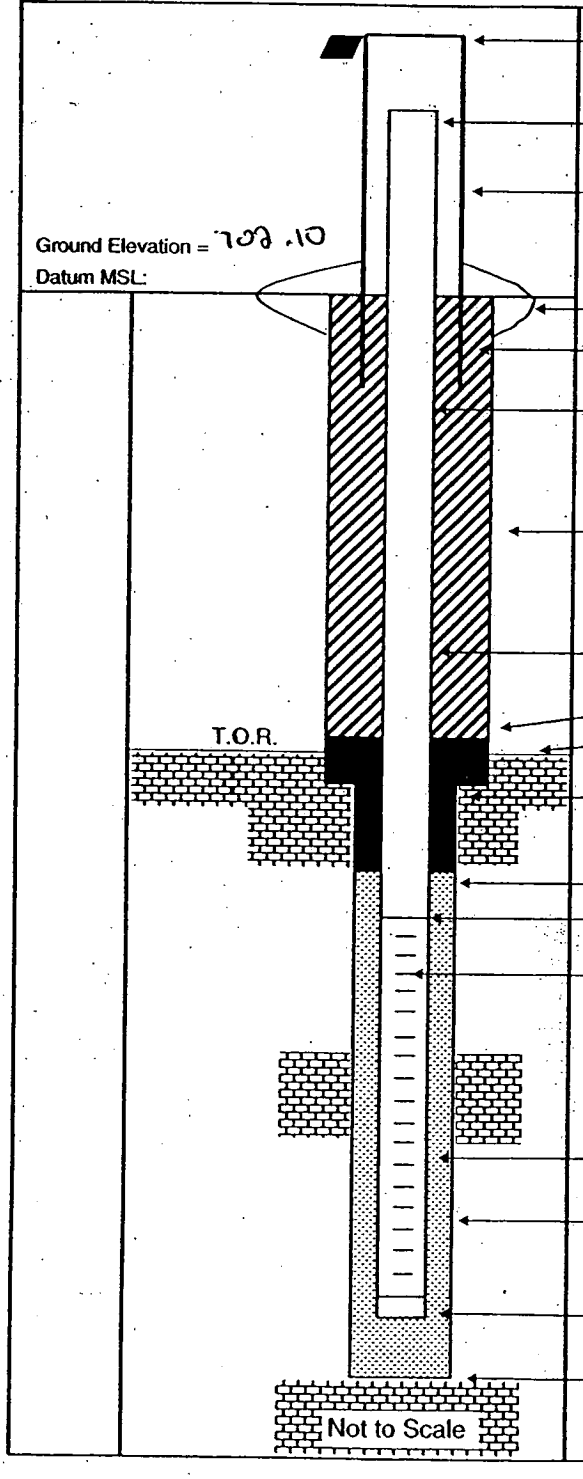

Elevation of Top of Casing: 705.28

Stick Up of Casing Above Ground Surface: 2.62'

Elevation of Top of Riser: 704.72

I.D. of Surface Casing: 4" SQUARE

Type of Surface Casing: STEEL

Type of Surface Seal: 4'x4'x6" PAD

I.D. of Permanent Casing: N/A

I.D. of Riser: 2"

Type of Riser: PVC

Borehole Diameter: 5" (7'-9') 6" (0-7')

Type of Backfill: VOL CLAY TO 4'

Elevation / Depth Top of Seal: 689.1 / 13'

Elevation / Depth Top of Bedrock: 695.1 / 7.0'

Type of Seal: BENT CHIPS

Elevation / Depth of Top of Filter Pack: 687.1 / 15'

Elevation / Depth of Top of Screen: 685.1 / 17'

Type of Screen: PVC

Slot Size x Length: .20 x 10'

I.D. of Screen: 2"

Type of Filter Pack: No. 20-40 SAND

Diameter of Hole in Bedrock: Core / Ream: 5"

Elevation / Depth of Bottom of Screen: 675.1 / 27'

Elevation / Total Depth of Borehole: 675.1 / 27'

Tetra Tech NUS, Inc.

BORING LOG

PROJECT NAME: NSWC CRANE
PROJECT NUMBER: N9060 CTO 0279
DRILLING COMPANY: BOWSER MORNER
DRILLING RIG: ROTOSONIC

BORING NUMBER: BMW103
DATE: 3/30/03
GEOLOGIST: BOB BALKOVEC
DRILLER: DAVE S.

Sample No. and Type or RQD	Depth (Ft.) or Run No.	Blows / 6" or RQD (%)	Sample Recovery / Sample Length	Lithology Change (Depth /Ft.) or Screened Interval	MATERIAL DESCRIPTION: Soil Density/ Consistency or Rock Hardness	Color	Material Classification	USCS *	Remarks	PID/FID Reading (ppm): Sample	Sampler BZ	Borehole**	Driller BZ**
	1						SEE BMW101 FOR LITHOLOGY		5" 0-15'				
						YELL OR	SILTY MATERIAL						
1515	5												
							SANDY MATERIAL						
1520	10								HARDER @ 10'				
							SANDY MATERIAL						
						GRAY	COLOR CHANGE @ 13'						
1530	15						SILTY MATERIAL						
				T.D. 15'			WELL SET @ 15' 2" PVC						
							SCREENED 5'-15'						
							SAND TO 3'						
							BENT TO 1'						

* When rock coring, enter rock brokeness.

** Include monitor reading in 6 foot intervals @ borehole. Increase reading frequency if elevated reponse read.

Remarks:

Drilling Area Background (ppm): —

Converted to Well: Yes X No ____ Well I.D. #: BMW103

Tetra Tech NUS, Inc.

BEDROCK
MONITORING WELL SHEET

WELL No.: 13MWT03

PERMIT No:

PROJECT:	NSWC CRANE	DRILLING Co.:	BOWSER MORNER	BORING No.:	13MWT03
PROJECT No.:	9060 CTO 0279	DRILLER:	DAVE S.	DATE COMPLETED:	3/30/03
SITE:	SWMU 13	DRILLING METHOD:	ROTOSONIC	NORTHING:	1310240.946
GEOLOGIST:	B. BALKOVEC	DEV. METHOD:	WHALE PUMP	EASTING:	3024891.661

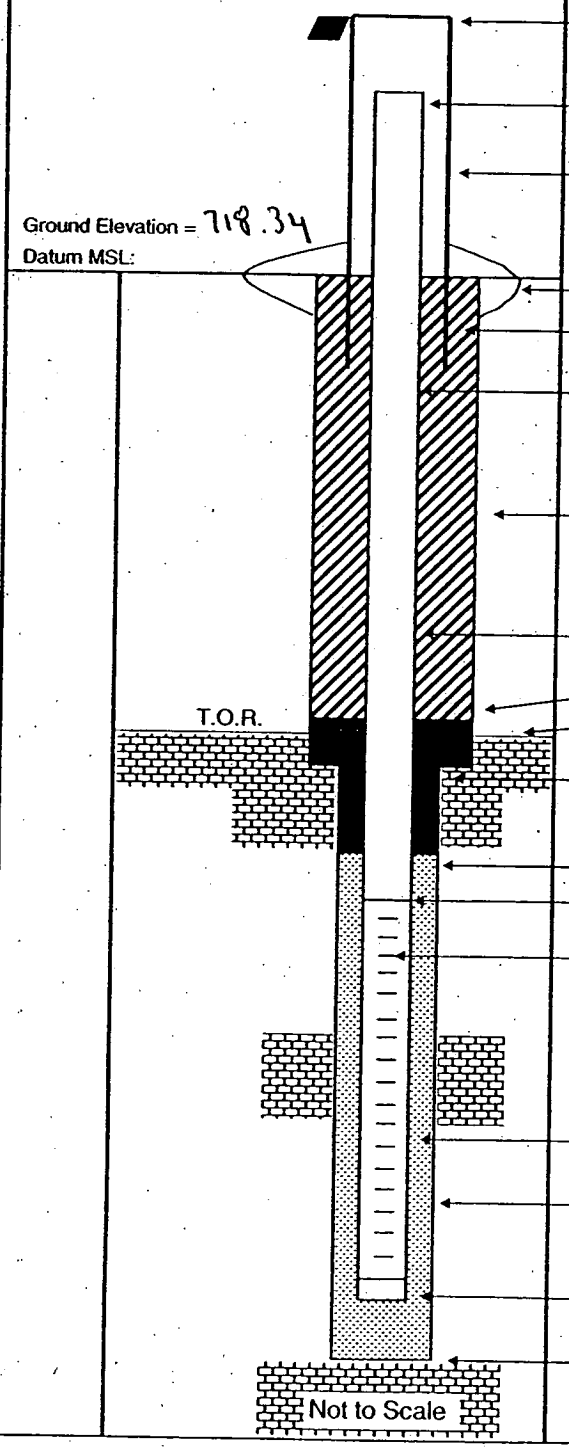

Elevation of Top of Casing: 721.60

Stick Up of Casing Above Ground Surface: 2.86'

Elevation of Top of Riser: 721.10

I.D. of Surface Casing: 4" SQUARE

Type of Surface Casing: STEEL

Type of Surface Seal: 4'x4'x6" PAD

I.D. of Permanent Casing: NA

I.D. of Riser: 2"

Type of Riser: PVC

Borehole Diameter: 5"

Type of Backfill: GROUT

Elevation / Depth Top of Seal: 717.34 / 1'

Elevation / Depth Top of Bedrock: 709.34 / 10'

Type of Seal: BENT. CHIPS

Elevation / Depth of Top of Filter Pack: 715.34 / 3'

Elevation / Depth of Top of Screen: 713.34 / 5'

Type of Screen: PVC

Slot Size x Length: 10' x .20

I.D. of Screen: 2"

Type of Filter Pack: No. 20-40 SAND

Diameter of Hole in Bedrock:
Core / Ream: 5"

Elevation / Depth of Bottom of Screen: 703.34 / 15'

Elevation / Total Depth of Borehole: 703.34 / 15'

Tetra Tech NUS, Inc.

BORING LOG

PROJECT NAME: NSWC CRANE
PROJECT NUMBER: N9060 CTO 0279
DRILLING COMPANY: BOWSER MORNER
DRILLING RIG: ROTOSONIC

BORING NUMBER: 13MW104
DATE: 3/30/03
GEOLOGIST: BOB BALKOVEC
DRILLER: DAVE S.

Sample No. and Type or RQD	Depth (Ft.) or Run No.	Blows / 6" or RQD (%)	Sample Recovery / Sample Length	Lithology Change (Depth /Ft.) or Screened Interval	MATERIAL DESCRIPTION: Soil Density/ Consistency or Rock Hardness	Color	Material Classification	USCS *	Remarks	PID/FID Reading (ppm): Sample	Sample BZ	Borehole**	Driller BZ**
	1				MOIST SOFT	BR	4' TOP SOIL	ML		0.0			
	2				MOIST	YELL OR	4'-7.5' CLAYEY SILT						
	3				M. STIFF	LT.	(MOTTLED)						
	4					GRAY							
S-1 0438	5		5' / 5'										
	6				MOIST		CLAYEY SILT SOME			0.0			
	7			▼?	M. STIFF		SOLUTION CAVITIES						
S-2 0438	8		3' / 3'		HARD + DRY	BR + GRAY	SANDY SILT STONE		REFUSAL @ 8'				
	9						SILTY MATERIAL IN		6" TO 5'				
	10						CUTTINGS		5" 5'-15'				
	11						5' REAM						
	12												
	13												
	14												
	15												
				TD 15'			SET WELL @ 15' 2" PVC						
							SCREENED 5'-15'						
							SAND TO 4'						
							BENT CHIPS TO 2'						

* When rock coring, enter rock brokeness.

** Include monitor reading in 6 foot intervals @ borehole. Increase reading frequency if elevated reponse read.

Remarks: 6" TO 5' 5" 5'-15'

Drilling Area Background (ppm): 0.0

Converted to Well: Yes X No _____ Well I.D. #: 13MW104

Tetra Tech NUS, Inc.

BEDROCK MONITORING WELL SHEET

WELL No.: 13MW704

PERMIT No:

PROJECT:	NSWC CRANE	DRILLING Co.:	BOWSER MORNER	BORING No.:	13MW704
PROJECT No.:	9060 CTO 0279	DRILLER:	DAVE S	DATE COMPLETED:	3/30/03
SITE:	SWMU 13	DRILLING METHOD:	ROTOSONIC	NORTHING:	1310383.346
GEOLOGIST:	B. BALKOVEC	DEV. METHOD:	WHALE PUMP	EASTING:	302454.6.113

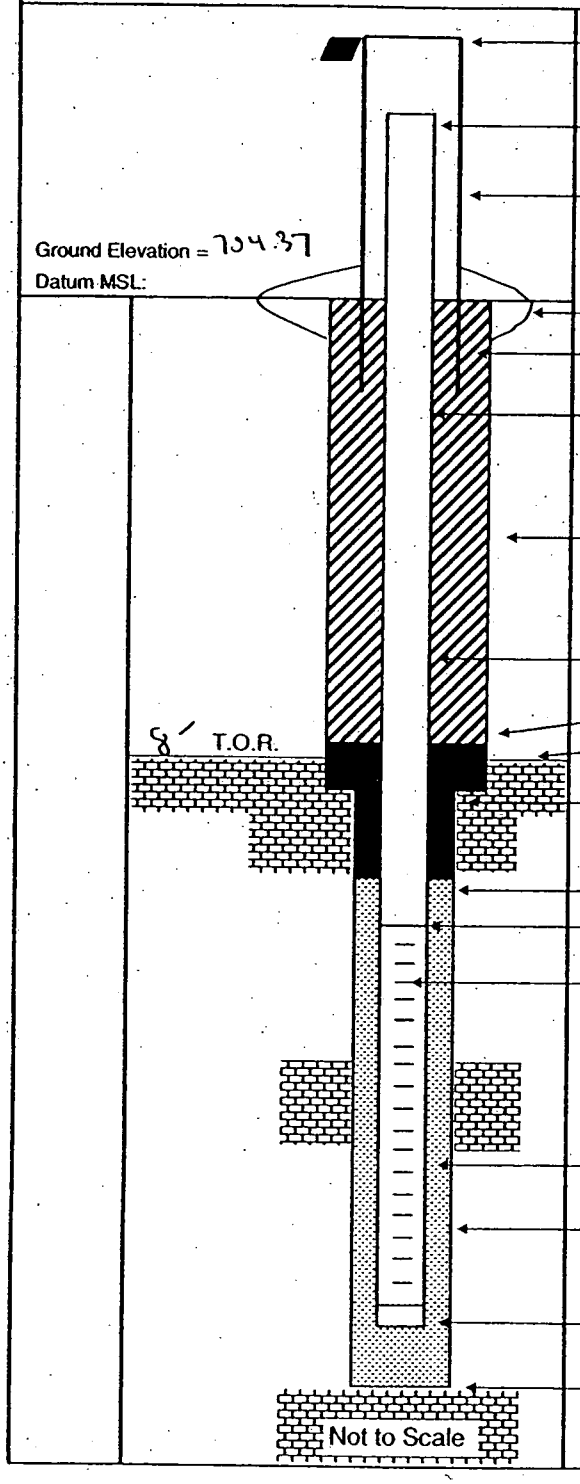

Elevation of Top of Casing: 707.32

Stick Up of Casing Above Ground Surface: 2.47'

Elevation of Top of Riser: 706.84

I.D. of Surface Casing: 4" SQUARE

Type of Surface Casing: STEEL

Type of Surface Seal: 4'x4'x6" PAD

I.D. of Permanent Casing: NA

I.D. of Riser: 2"

Type of Riser: PVC

Borehole Diameter: 5"

Type of Backfill: CEMENT

Elevation / Depth Top of Seal: 700.37 / 2'

Elevation / Depth Top of Bedrock: 696.37 / 8'

Type of Seal: BENT CHIPS

Elevation / Depth of Top of Filter Pack: 700.37 / 4'

Elevation / Depth of Top of Screen: 694.37 / 5'

Type of Screen: PVC

Slot Size x Length: .20 x 6'

I.D. of Screen: 2"

Type of Filter Pack: No. 20-40 SAND

Diameter of Hole in Bedrock:
Core / Ream: 5"

Elevation / Depth of Bottom of Screen: 684.37 / 15'

Elevation / Total Depth of Borehole: 684.37 / 15'

Tetra Tech NUS, Inc.

BORING LOG

PROJECT NAME: NSWC CRANE
PROJECT NUMBER: N9060 CTO 0279
DRILLING COMPANY: BOWSER MORNER
DRILLING RIG: ROTOSONIC
BORING NUMBER: BMW105
DATE: 3/29/03
GEOLOGIST: BOB BALKOVEC
DRILLER: DAVES

Sample No. and Type or RQD	Depth (Ft.) or Run No.	Blows / 6" or RQD (%)	Sample Recovery / Sample Length	Lithology Change (Depth /Ft.) or Screened Interval	MATERIAL DESCRIPTION: Soil Density/ Consistency or Rock Hardness	Color	Material Classification	USCS*	Remarks	PID/FID Reading (ppm): Sample	Sampler BZ	Borehole**	Driller BZ**
	1					BR	SEE BORING LOG BMW107						
						↓	FOR LITHOLOGY						
						GY							
						GRAY	5" REAM TO 6'						
0920	5					↓	SILTY MATERIAL						
						YELL	SILT & CLAY						
						OR	MATERIAL						
						↓	↓						
	10					GRAY	SILTY MATERIAL		HARDER @ 9'				
						↓	↓						
	15												
0930	16					↓	↓						
				TD 16'			SET WELL @ 16' 2" PVC						
							SCREENED 6'-16'						
							SAND TO 4'						
							BENT CHIPS TO 2'						

* When rock coring, enter rock brokeness.

** Include monitor reading in 6 foot intervals @ borehole. Increase reading frequency if elevated reponse read.

Remarks:

Drilling Area Background (ppm): —

Converted to Well: Yes X No

Well I.D. #: BMW105

Tetra Tech NUS, Inc.

BEDROCK
MONITORING WELL SHEET

WELL No.: 13MW105

PERMIT No:

PROJECT:	NSWC CRANE	DRILLING Co.:	BOWSER MORNER	BORING No.:	13MW105
PROJECT No.:	9060 CTO 0279	DRILLER:	DAVE S.	DATE COMPLETED:	3/29/03
SITE:	SWMU 13	DRILLING METHOD:	ROTOSONIC	NORTHING:	1310758.427
GEOLOGIST:	B. BALKOVEC	DEV. METHOD:	Whale Pump	EASTING:	3024980.025

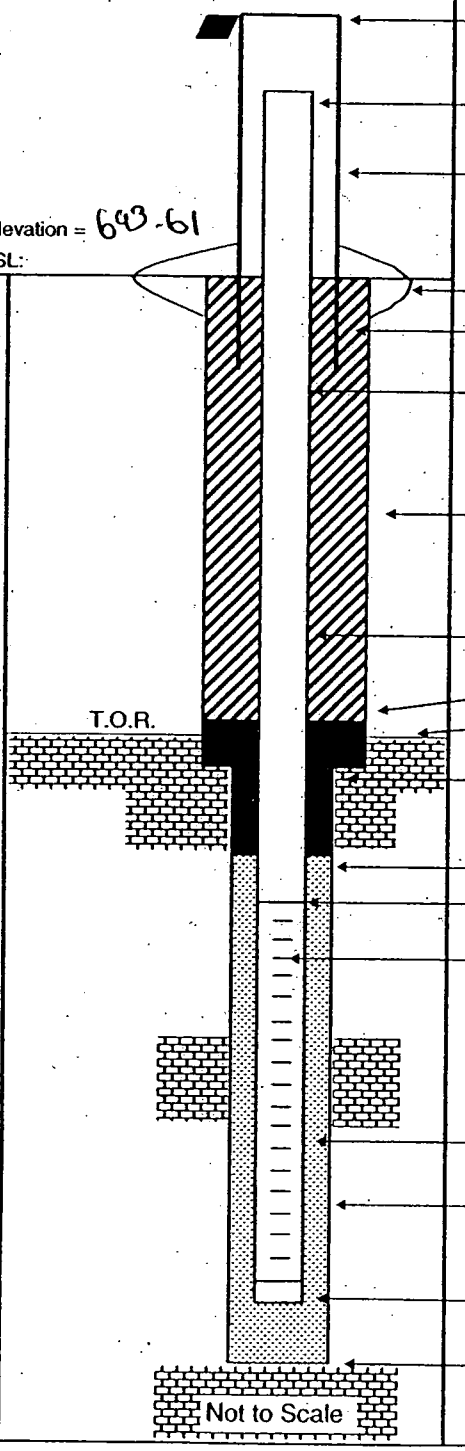

Elevation of Top of Casing:	697.12
Stick Up of Casing Above Ground Surface:	2.83'
Elevation of Top of Riser:	696.44
I.D. of Surface Casing:	4" SQUARE
Type of Surface Casing:	STEEL
Type of Surface Seal:	4' x 4' x 6" PAD
I.D. of Permanent Casing:	NA
I.D. of Riser:	2"
Type of Riser:	PVC
Borehole Diameter:	5"
Type of Backfill:	GROUT
Elevation / Depth Top of Seal:	691.61 / 2'
Elevation / Depth Top of Bedrock:	684.61 / 9'
Type of Seal:	BENT CHIPS
Elevation / Depth of Top of Filter Pack:	689.61 / 4'
Elevation / Depth of Top of Screen:	687.61 / 6'
Type of Screen:	PVC
Slot Size x Length:	.20 x 10'
I.D. of Screen:	2"
Type of Filter Pack:	No. 20-40 SAND
Diameter of Hole in Bedrock: Core / (Ream):	5'
Elevation / Depth of Bottom of Screen:	677.61 / 16'
Elevation / Total Depth of Borehole:	677.61 / 16'

Tetra Tech NUS, Inc.

BORING LOG

PROJECT NAME: NSWC CRANE
PROJECT NUMBER: N9060 CTO 0279
DRILLING COMPANY: BOWSER MORNER
DRILLING RIG: ROTOSONIC

BORING NUMBER: 13mw T06
DATE: 4/1/03
GEOLOGIST: BOB BALKOVEC
DRILLER: DAVE S.

Sample No. and Type or RQD	Depth (Ft.) or Run No.	Blows / 6" or RQD (%)	Sample Recovery / Sample Length	Lithology Change (Depth /Ft.) or Screened Interval	MATERIAL DESCRIPTION: Soil Density/ Consistency or Rock Hardness	Color	Material Classification	USCS *	Remarks	PID/FID Reading (ppm): Sample	Sampler BZ	Borehole**	Driller BZ**
	1				MOIST + SOFT	BR	.5' TOP SOIL	ML		0.0			
	2				MOIST +	BR +	.5'-4' CLAYEY SILT	↓	MOTTLED	↓			
	3				M. STIFF	LT GRAY	↓	↓		↓			
S-1 1705	4		4' / 4'		↓	↓	↓	↓		↓			
	5				↓	↓	CLAYEY SILT 4-7'	ML		0.0			
	6				↓	↓	↓	↓		↓			
	7			?	↓	↓	↓ SANDY 6.5'-7'	↓	POSS. SAT @ 6.5'	↓			
	8				DRY +	LT	7'-15' SILTSTONE	↓		↓			
S-2 1710	9		4.9' / 5'		SOFT	GRAY	↓	↓		↓			
	10				SOFT +	BR +	SILTSTONE W/ SAND	↓		0.0			
	11				MOIST	LT GRAY	SAND (FINE)	↓		↓			
	12				HARD +	LT	SILTSTONE	↓		↓			
	13				DRY	GRAY	↓	↓		↓			
	14				↓	LT GRAY	↓	↓		↓			
S-3 1729	15		5.5' / 6'		V. HARD + DRY	+ PURPLE	↓	↓		↓			
				15' T.D.			WELL SET @ 15' 2" PVC						
							SCREENED 5'-15'						
							SAND TO 3'						
							BENT TO 1'						

* When rock coring, enter rock brokeness.

** Include monitor reading in 6 foot intervals @ borehole. Increase reading frequency if elevated reponse read.

Remarks: 5" 0-15'

Drilling Area Background (ppm): 0.0

Converted to Well: Yes X No ____ Well I.D. #: 13mwT06

Tetra Tech NUS, Inc.

BEDROCK
MONITORING WELL SHEET

WELL No.: BMW706

PERMIT No:

PROJECT:	NSWC CRANE	DRILLING Co.:	BOWSER MORNER	BORING No.:	BMW706
PROJECT No.:	9060 CTO 0279	DRILLER:	DAVE S.	DATE COMPLETED:	4/7/03
SITE:	SWMU 13	DRILLING METHOD:	ROTOSONIC	NORTHING:	1304916.177
GEOLOGIST:	B. BALKOVEC	DEV. METHOD:	WHALE PUMP	EASTING:	3024445.270

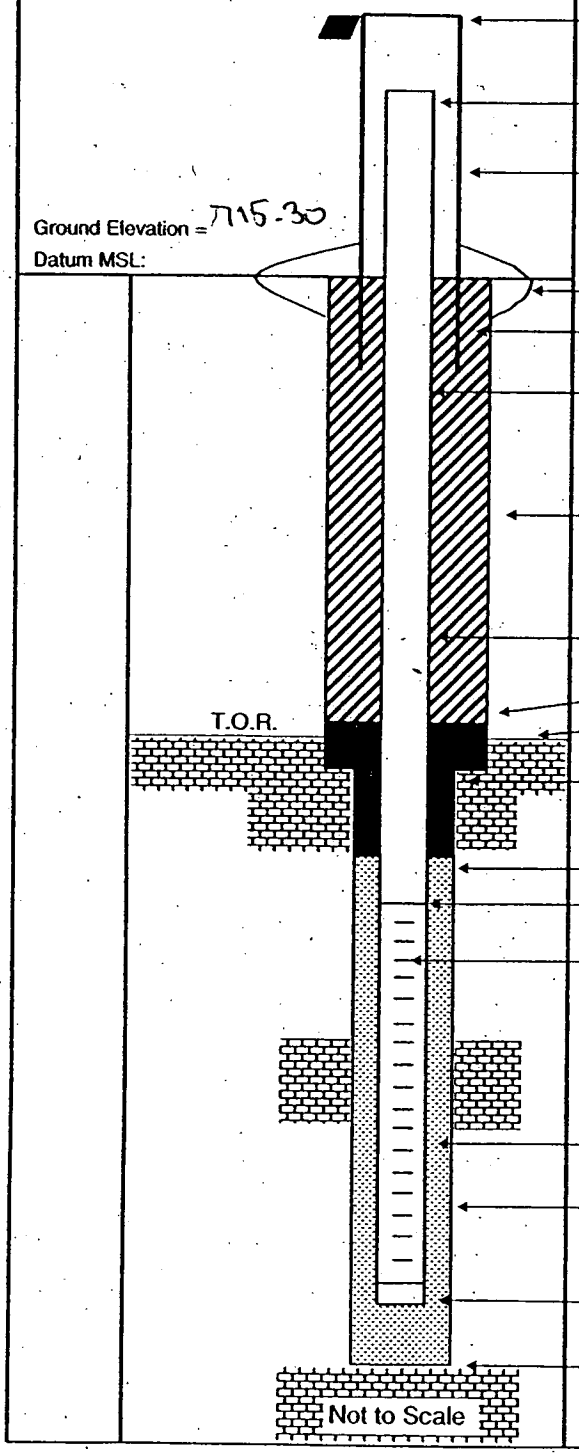

Elevation of Top of Casing: 718.47

Stick Up of Casing Above Ground Surface: 2.63'

Elevation of Top of Riser: 717.93

I.D. of Surface Casing: 4" SQUARE

Type of Surface Casing: STEEL

Type of Surface Seal: 4'x4'x6" PAD

I.D. of Permanent Casing: NA

I.D. of Riser: 2"

Type of Riser: PVC

Borehole Diameter: 5"

Type of Backfill: GROUT

Elevation / Depth Top of Seal: 714.3 / 1'

Elevation / Depth Top of Bedrock: 708.3 / 7.0

Type of Seal: BENT. CHIPS

Elevation / Depth of Top of Filter Pack: 712.3 / 3'

Elevation / Depth of Top of Screen: 710.3 / 5'

Type of Screen: PVC

Slot Size x Length: .20 x 10'

I.D. of Screen: 2"

Type of Filter Pack: No. 20-40 SAND

Diameter of Hole in Bedrock: Core / Ream: 5"

Elevation / Depth of Bottom of Screen: 700.3 / 15'

Elevation / Total Depth of Borehole: 700.3 / 15'

Tetra Tech NUS, Inc.

BORING LOG

PROJECT NAME: NSWC CRANE
PROJECT NUMBER: N9060 CTO 0279
DRILLING COMPANY: BOWSER MORNER
DRILLING RIG: ROTOSONIC
BORING NUMBER: 13MWT07
DATE: 3/29/03
GEOLOGIST: BOB BALKOVEC
DRILLER: DAVE S.

Sample No. and Type or RQD	Depth (Ft.) or Run No.	Blows / 6" or RQD (%)	Sample Recovery / Sample Length	Lithology Change (Depth /Ft.) or Screened Interval	MATERIAL DESCRIPTION: Soil Density/ Consistency or Rock Hardness	Color	Material Classification	USCS *	Remarks	PID/FID Reading (ppm): Sample	Sampler BZ	Borehole**	Driller BZ**
	1				MOIST +	BR	TOP 1' TOP SOIL	M	4'-TO 5'	0.0			
	2				M-STIFF	YELLOW BR	1'-3' SANDY SILT	↓	WELL SET 6"-TO 5'	↓			
	3				↓	LT GRAY	(MOTTLED)	↓	CALE 5'-	↓			
	4				DRY +	LT	3'-5' SILTSTONE		WEATHERED 3'-4'	↓			
H 0807	5		4.5' / 5'		SOFT	GRAY	ROCK @ 4' (COMPETENT)	DK		↓			
	6				MOIST +	YELLOW BR	5-7' SANDY SILT W/ SOME	M	MOTTLED	0.0			
	7				M-STIFF	GRAY	CLAY	↓	↓	↓			
	8		70%		SOFT + WET	BR	7'-8.5' SILTY CLAY	CL		↓			
	9		RQD		DRY +	LT	SILTSTONE W/ TRACE SAND	BR	ROCK @ 9.5'	↓			
CL	10		8.5'		SOFT	GRAY	↓	↓		↓			
	11				↓	↓	↓	↓		0.0			
	12				DRY + HARD	YELLOW BR	11.5'-13' SANDSTONE	↓		↓			
	13				MOIST +	LT + DK	SILTSTONE	↓		↓			
	14				SOFT	GRAY	↓	↓		↓			
	15		9.5' / 10'		↓	↓	↓	↓		0			
				T.D. 15'			SET WELL @ 15' 2" PVC						
							SCREENED 5'-15'						
							SAND TO 4'						
							BENT. CHIPS TO 2'						

* When rock coring, enter rock brokeness.

** Include monitor reading in 6 foot intervals @ borehole. Increase reading frequency if elevated reponse read.

Remarks:

Drilling Area Background (ppm): 0.0

Converted to Well: Yes X No

Well I.D. #: 13MWT07

Tetra Tech NUS, Inc.

BEDROCK
MONITORING WELL SHEET

WELL No.: 13MW707

PERMIT No:

PROJECT:	NSWC CRANE	DRILLING Co.:	BOWSER MORNER	BORING No.:	13MW707
PROJECT No.:	9060 CTO 0279	DRILLER:	DAVE S.	DATE COMPLETED:	3/24/03
SITE:	SWMU 13	DRILLING METHOD:	ROTOSONIC	NORTHING:	1310594.322
GEOLOGIST:	B. BALKOVEC	DEV. METHOD:	WHALE PUMP	EASTING:	3024094.128

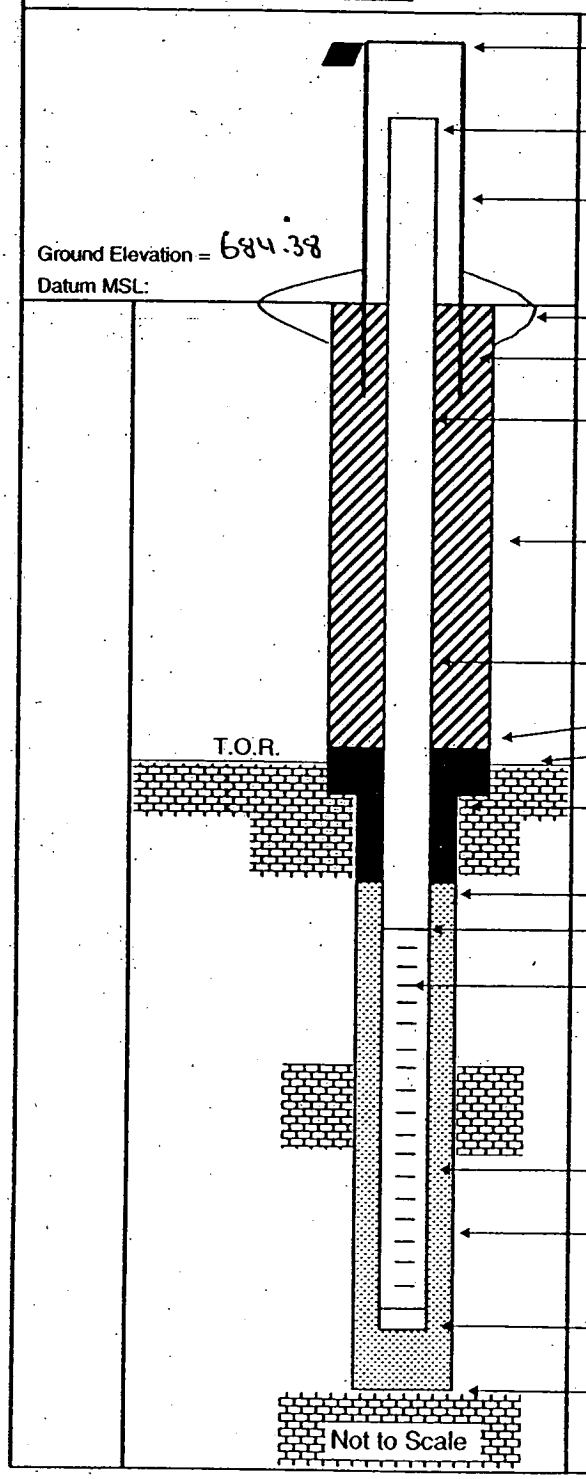

Elevation of Top of Casing: 687.70

Stick Up of Casing Above Ground Surface: 2.84

Elevation of Top of Riser: 687.22

I.D. of Surface Casing: 4" SQUARE

Type of Surface Casing: STEEL

Type of Surface Seal: 4'x4'x6" PAD

I.D. of Permanent Casing: NA

I.D. of Riser: 2"

Type of Riser: PVC

Borehole Diameter: 5"

Type of Backfill: GROUT

Elevation / Depth Top of Seal: 682.38 / 2'

Elevation / Depth Top of Bedrock: 676.88 / 8.5'

Type of Seal: BENT CHIPS

Elevation / Depth of Top of Filter Pack: 680.38 / 4'

Elevation / Depth of Top of Screen: 679.38 / 5'

Type of Screen: PVC

Slot Size x Length: .20 x 10'

I.D. of Screen: 2"

Type of Filter Pack: No. 20-40 SAND

Diameter of Hole in Bedrock:
Core / Ream: 5"

Elevation / Depth of Bottom of Screen: 669.38 / 15'

Elevation / Total Depth of Borehole: 669.38 / 15'

Tetra Tech NUS, Inc.

BORING LOG

PROJECT NAME: NSWC CRANE
PROJECT NUMBER: N9060 CTO 0279
DRILLING COMPANY: BOWSER MORNER
DRILLING RIG: ROTOSONIC

BORING NUMBER: 13MW108 / SB08
DATE: 3/30/03
GEOLOGIST: BOB BALKOVEC
DRILLER: DAVE S.

Sample No. and Type or RQD	Depth (Ft.) or Run No.	Blows / 6" or RQD (%)	Sample Recovery / Sample Length	Lithology Change (Depth /Ft.) or Screened Interval	MATERIAL DESCRIPTION: Soil Density/ Consistency or Rock Hardness	Color	Material Classification	USCS*	Remarks	PID/FID Reading (ppm): Sample	Sampler BZ	Borehole**	Driller BZ**
	1				MOIST SOFT	BR	TOP .5' TOP SOIL	ML		0.0			
	2				DRY +	YELL OR +	CLAYEY SILT		0-2 @ 0745				
	3				M. STIFF	GRAY	(MOTTLED)		OVP F0031003 04				
	4												
3-1 0943	5		4.5' / 5'										
	6					BR	5-6.5' CLAYEY SILT W/ S.S. FRAGS	ML		0.0			
	7					YELL OR	6.5-8' CLAYEY SILT		6.5' @ 0800				
	8						(MOTTLED)		MYMSD				
	9				SOFT +	LT GRAY	8-10' SILTSTONE	BR	POSS. WATER @ 8'				
3-2 1254	10		4.5' / 5'		DRY			BR					
	11				HARD	YELL OR	SANDSTONE 10-10.5'			0.0			
	12				HARD +	LT GRAY	10.5'-13.5' SILTSTONE						
	13				DRY	YELL OR	(MOTTLED)		MOISTURE ALONG				
	14				HARD +	LT/DK	THIN LAMINATED SILTSTONE		SIDE WALLS				
3-3 0810	15		5' / 5'		DRY	GRAY	13.5'-15'		6" TO 5' 5" REAM				
				TD 15'			WELL SET @ 15'		5'-15'				
							SCREENED 5'-15'		DRILLER CASING				
							SAND TO 4'		WATER				
							BENT TO 2'		WELL 9.5' BGS				
									AFTER BLOWOUT				

* When rock coring, enter rock brokeness.

** Include monitor reading in 6 foot intervals @ borehole. Increase reading frequency if elevated reponse read.

Remarks:

Drilling Area Background (ppm): 0.0

Converted to Well: Yes X No

Well I.D. #: 13MW108

Tetra Tech NUS, Inc.

BEDROCK
MONITORING WELL SHEET

WELL No.: BMW108

PERMIT No:

PROJECT:	NSWC CRANE	DRILLING Co.:	BOWSER MORNER	BORING No.:	BMW108/SB08
PROJECT No.:	9060 CTO 0279	DRILLER:	DAVES	DATE COMPLETED:	3/30/03
SITE:	SWMU 13	DRILLING METHOD:	ROTOSONIC	NORTHING:	1310747.860
GEOLOGIST:	B. BALKOVEC	DEV. METHOD:	WHALE PUMP	EASTING:	3024337.560

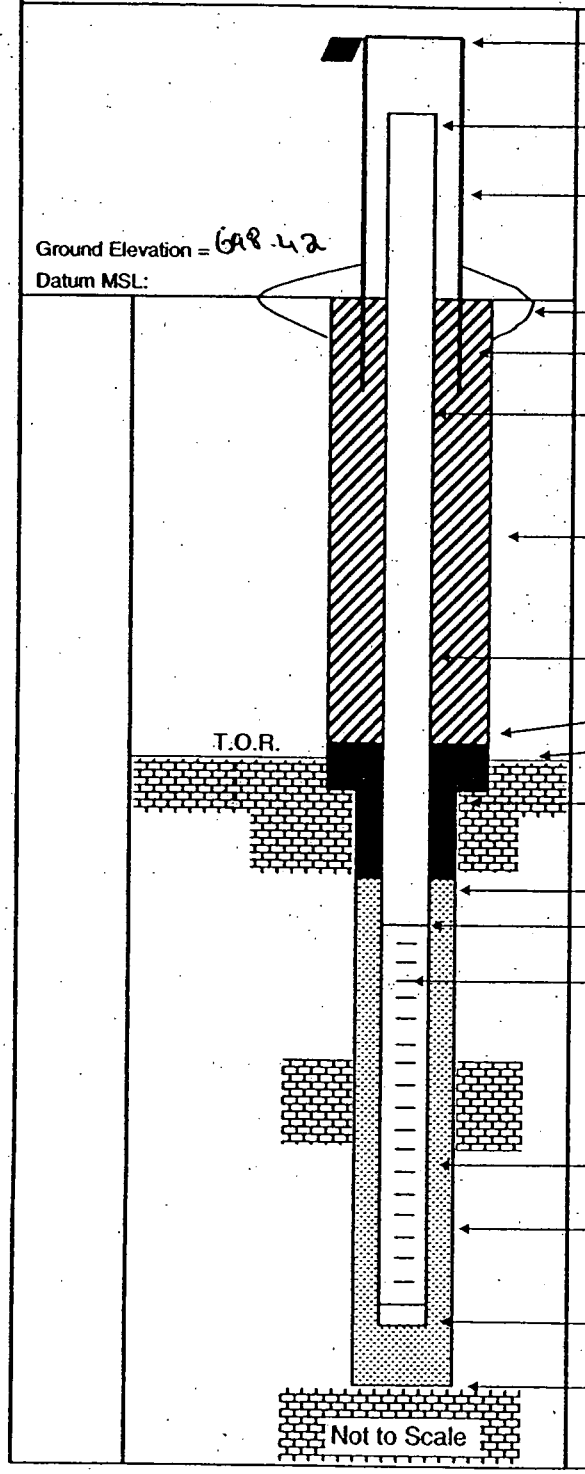

Elevation of Top of Casing:	701.11
Stick Up of Casing Above Ground Surface:	2.14
Elevation of Top of Riser:	700.56
I.D. of Surface Casing:	4" SQUARE
Type of Surface Casing:	STEEL
Type of Surface Seal:	4'x4'x6" PAD
I.D. of Permanent Casing:	NA
I.D. of Riser:	2"
Type of Riser:	PVC
Borehole Diameter:	6" (0-5') 5" (5'-15')
Type of Backfill:	GROUT
Elevation / Depth Top of Seal:	696.42 / 2'
Elevation / Depth Top of Bedrock:	690.42 / 8'
Type of Seal:	BENTONITE
Elevation / Depth of Top of Filter Pack:	694.42 / 4'
Elevation / Depth of Top of Screen:	693.42 / 5'
Type of Screen:	PVC
Slot Size x Length:	.20 x 10'
I.D. of Screen:	2"
Type of Filter Pack:	No. 20-40 SAND
Diameter of Hole in Bedrock: Core / Ream:	5"
Elevation / Depth of Bottom of Screen:	683.42 / 15'
Elevation / Total Depth of Borehole:	683.42 / 15'

Tetra Tech NUS, Inc.

BORING LOG

PROJECT NAME: NSWC CRANE
PROJECT NUMBER: N9060 CTO 0279
DRILLING COMPANY: BOWSER MORNER
DRILLING RIG: ROTOSONIC
BORING NUMBER: 13MW109
DATE: 4/1/03
GEOLOGIST: BOB BALKOVEC
DRILLER: DAVES

Sample No. and Type or RQD	Depth (Ft.) or Run No.	Blows / 6" or RQD (%)	Sample Recovery / Sample Length	Lithology Change (Depth /Ft.) or Screened Interval	MATERIAL DESCRIPTION: Soil Density/ Consistency or Rock Hardness	Color	Material Classification	USCS*	Remarks	PID/FID Reading (ppm): Sample	Sampler BZ	Borehole**	Driller BZ**
						YELL	FOR COMPLETE LITHOLOGY						
						OR	SEE 13MWT10						
							5" REAM TO 20'						
							SILTY MATERIAL						
	5												
									HARDER DRILLING				
									@ 6'				
						LT			COLOR CHANGE				
						GRAY			7'				
	10												
						DK	SILTY MATERIAL						
						GRAY							
	15												
							SHALEY MATERIAL						
	20												
							WELL SET @ 20' 2" PVC						
							SCREENED 10'-20'						
							SAND TO 8'						
							BEAD TO 2'						

* When rock coring, enter rock brokeness.

** Include monitor reading in 6 foot intervals @ borehole. Increase reading frequency if elevated reponse read.

Remarks:

Drilling Area Background (ppm): 7

Converted to Well: Yes X No

Well I.D. #: 13MW109

Tetra Tech NUS, Inc.

BEDROCK
MONITORING WELL SHEET

WELL No.: 13MWT09

PERMIT No:

PROJECT:	NSWC CRANE	DRILLING Co.:	BOWSER MORNER	BORING No.:	13MWT09
PROJECT No.:	9060 CTO 0279	DRILLER:	DAVES.	DATE COMPLETED:	4/1/03
SITE:	SWMU 13	DRILLING METHOD:	ROTOSONIC	NORTHING:	1309662.066
GEOLOGIST:	B. BALKOVEC	DEV. METHOD:	WATTERA	EASTING:	3024044.030

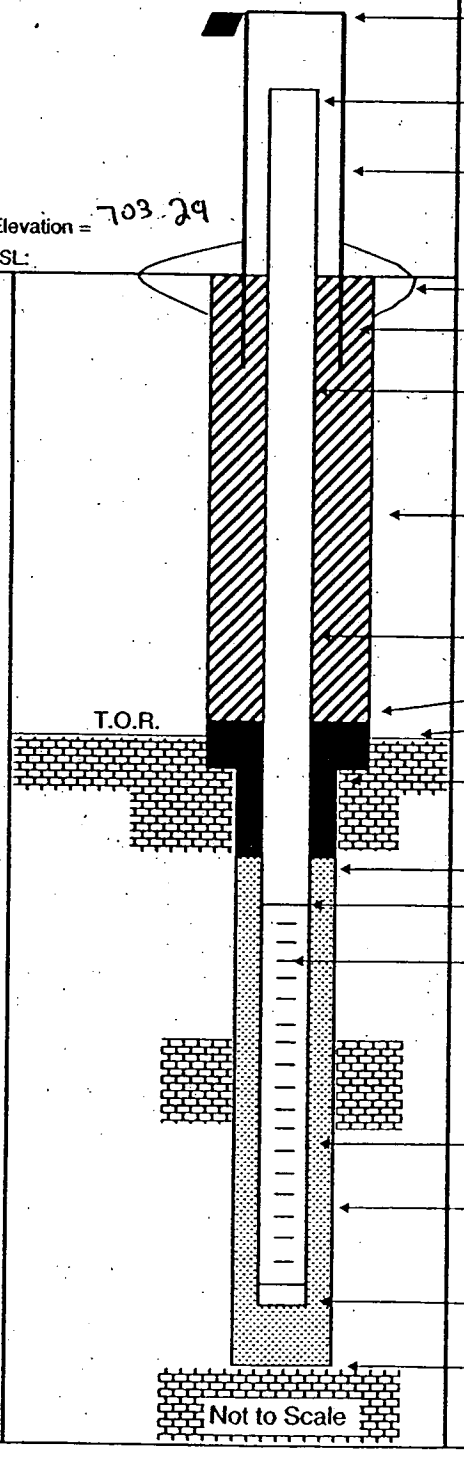

Elevation of Top of Casing: 706.37

Stick Up of Casing Above Ground Surface: 2.61'

Elevation of Top of Riser: 705.90

I.D. of Surface Casing: 4" SQUARE

Type of Surface Casing: STEEL

Type of Surface Seal: 4'x4'x6" PAD

I.D. of Permanent Casing: NA

I.D. of Riser: 2"

Type of Riser: PVC

Borehole Diameter: 5"

Type of Backfill: GROUT

Elevation / Depth Top of Seal: 701.29 / 2'

Elevation / Depth Top of Bedrock: 697.29 / ≈ 6'

Type of Seal: BENT CHIPS

Elevation / Depth of Top of Filter Pack: 695.29 / 8'

Elevation / Depth of Top of Screen: 693.29 / 10'

Type of Screen: PVC

Slot Size x Length: .20 x 10'

I.D. of Screen: 2"

Type of Filter Pack: No. 20-40 SAND

Diameter of Hole in Bedrock: Core / (Ream) 5"

Elevation / Depth of Bottom of Screen: 683.29 / 20'

Elevation / Total Depth of Borehole: 683.29 / 20'

Tetra Tech NUS, Inc.

BORING LOG

PROJECT NAME: NSWC CRANE
PROJECT NUMBER: N9060 CTO 0279
DRILLING COMPANY: BOWSER MORNER
DRILLING RIG: ROTOSONIC

BORING NUMBER: BMW TW
DATE: 3/27/03
GEOLOGIST: BOB BALKOVEC
DRILLER: DAVE S.

Sample No. and Type or RQD	Depth (Ft.) or Run No.	Blows / 6" or RQD (%)	Sample Recovery / Sample Length	Lithology Change (Depth /Ft.) or Screened Interval	MATERIAL DESCRIPTION: Soil Density/ Consistency or Rock Hardness	Color	Material Classification	USCS*	Remarks	PID/FID Reading (ppm): Sample	Sampler BZ	Borehole**	Driller BZ**
	1				MOIST &	BR	TOP .5' TOP SOIL		HIT CONCRETE @	0.0	0.0		
	2				MOIST	↓	.5' CLAY & SILT W/ S.S. GRAV.	ML	3' WELL OFFSET				
	3					LT BR	2-5.5' SANDY SILT W/ SOME	ML	HIT CONCRETE AGAIN				
	4					+ GRAY	CLAY						
S-1 1337	5		4.5' / 5'									0.0	0.0
	6					YELL BR	SANDY SILT	ML		0.0			
	7				SOFT & DRY	LT	SILTSTONE 5.5'-14.5'	R4	ROCK @ 5.5'				
	8					GRAY		BR					
	9												
S-2 1351	10		5' / 5'			DK GRAY	(COLOR CHANGE)						
	11			?	MOIST?		SILTSTONE		COLD TO THE	0.0			
	12				STIFF				TOUCH (10'-12')				
	13												
	14												
S-3 1403	15		4.9' / 5'		DRY & LOOSE	BLK	.5' COAL SEAM		6" TO 15'				
	16					BLK	BLACK MATERIAL TO		5" BEAM 15'				
	17						CUTTINGS (COAL)						
	18					GRAY	SHALEY MATERIAL						
	19												
R-1 1520	20								BLOW OUT HOLE				
	21					GRAY	SHALEY MATERIAL		WATER @ 19' BGS				
	22												
	23					DK GRAY	SILTY MATERIAL						
	24												
R-2 1530	25								BLOW OUT HOLE W/ 19' BGS.				

* When rock coring, enter rock brokeness.

** Include monitor reading in 6 foot intervals @ borehole. Increase reading frequency if elevated reponse read.

Drilling Area Background (ppm): 0.0

Remarks: 6' OFFSET SET WELL @ 25' 10' SCREEN
SAND TO 13'
BENT TO 11' VOL CLAY TO 4'

Converted to Well: Yes X No ___ Well I.D. #: BMWTW

Tetra Tech NUS, Inc.

BEDROCK
MONITORING WELL SHEET

WELL No.: 13MWT10

PERMIT No:

PROJECT:	NSWC CRANE	DRILLING Co.:	BOWSER MORNER	BORING No.:	13MWT10
PROJECT No.:	9060 CTO 0279	DRILLER:	DAVE S.	DATE COMPLETED:	3/27/03
SITE:	SWMU 13	DRILLING METHOD:	ROTOSONIC	NORTHING:	1304479.643
GEOLOGIST:	B. BALKOVEC	DEV. METHOD:	WHALE PUMP	EASTING:	3024001.262

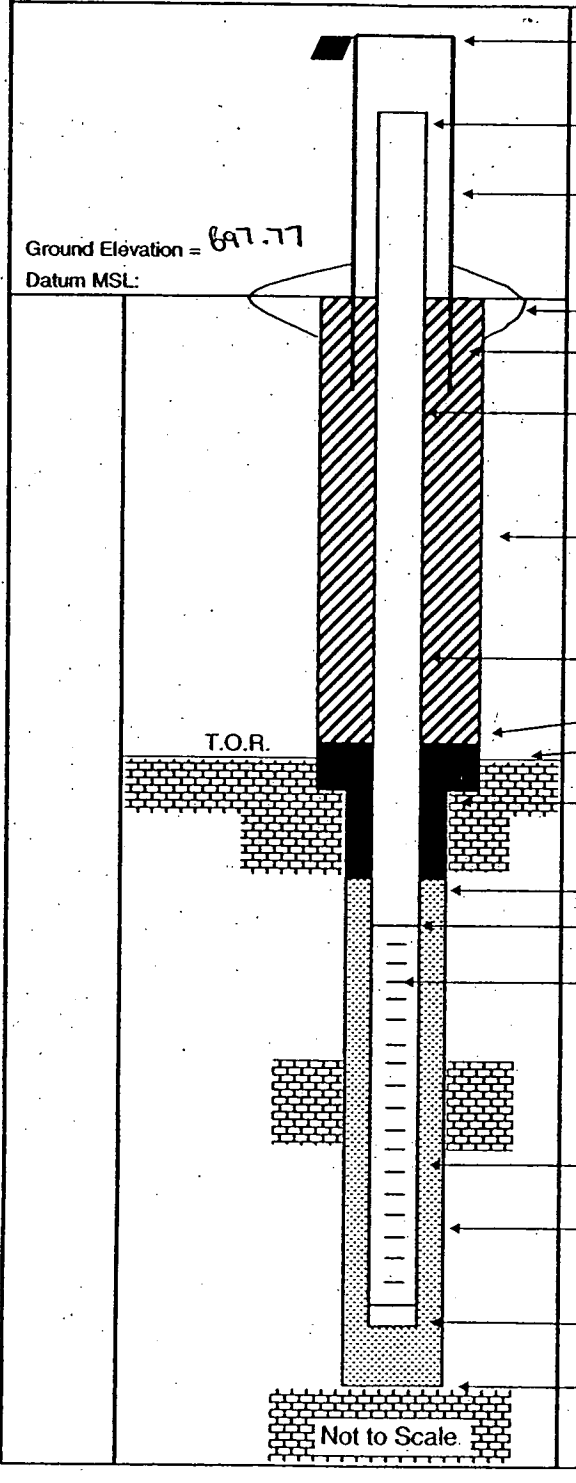

Elevation of Top of Casing: 700.64

Stick Up of Casing Above Ground Surface: 2.38

Elevation of Top of Riser: 700.15

I.D. of Surface Casing: 4" SQUARE

Type of Surface Casing: STEEL

Type of Surface Seal: 4'x4'x6" PAD

I.D. of Permanent Casing: NA

I.D. of Riser: 2"

Type of Riser: PVC

Borehole Diameter: 6" (0-15') 5" (15'-25')

Type of Backfill: VOL CLAY TO 4'

Elevation / Depth Top of Seal: 686.77 / 11'

Elevation / Depth Top of Bedrock: 692.77 / 5.5'

Type of Seal: BENT. CHIPS

Elevation / Depth of Top of Filter Pack: 684.77 / 13'

Elevation / Depth of Top of Screen: 682.77 / 15'

Type of Screen: PVC

Slot Size x Length: .20 x 10'

I.D. of Screen: 2"

Type of Filter Pack: No. 20-40 SAND

Diameter of Hole in Bedrock: Core / Ream: 5"

Elevation / Depth of Bottom of Screen: 672.77 / 25'

Elevation / Total Depth of Borehole: 672.77 / 25'

Tetra Tech NUS, Inc.

BORING LOG

PROJECT NAME: NSWC CRANE
PROJECT NUMBER: N9060 CTO 0279
DRILLING COMPANY: BOWSER MORNER
DRILLING RIG: ROTOSONIC
BORING NUMBER: 13 MW T11
DATE: 3/28/03
GEOLOGIST: BOB BALKOVEC
DRILLER: DAVE S.

Sample No. and Type or RQD	Depth (Ft.) or Run No.	Blows / 6" or RQD (%)	Sample Recovery / Sample Length	Lithology Change (Depth /Ft.) or Screened Interval	MATERIAL DESCRIPTION: Soil Density/ Consistency or Rock Hardness	Color	Material Classification	USCS *	Remarks	PID/FID Reading (ppm): Sample	Sampler BZ	Borehole**	Driller BZ**
						PRE	REFER TO 13 MW T12						
							FOR COMPLETE LITHOLOGY						
							6" CASING TO 5'						
	5						5" REAM TO 15'						
							0-7' SILTY MATERIAL						
									HARDER DRILLING				
						GRAY	SANDY MATERIAL		@ 7'				
	10												
	15												
				T.D. 15'			SET WELL @ 15' 2" PVC						
							SCREENED 5'-15'						
							SAND TO 4'						
							BENT CHIPS 2'						

* When rock coring, enter rock brokeness.

** Include monitor reading in 6 foot intervals @ borehole. Increase reading frequency if elevated reponse read.

Remarks:

Drilling Area Background (ppm): —

Converted to Well: Yes X No

Well I.D. #: 13 MW T11

Tetra Tech NUS, Inc.

BEDROCK MONITORING WELL SHEET

WELL No.: 13MW711

PERMIT No:

PROJECT:	NSWC CRANE	DRILLING Co.:	BOWSER MORNER	BORING No.:	13MW711
PROJECT No.:	9060 CTO 0279	DRILLER:	DAVE S.	DATE COMPLETED:	3/28/03
SITE:	SWMU 13	DRILLING METHOD:	ROTOSONIC	NORTHING:	1310233.721
GEOLOGIST:	B. BALKOVEC	DEV. METHOD:	WHALE PUMP	EASTING:	3023750.087

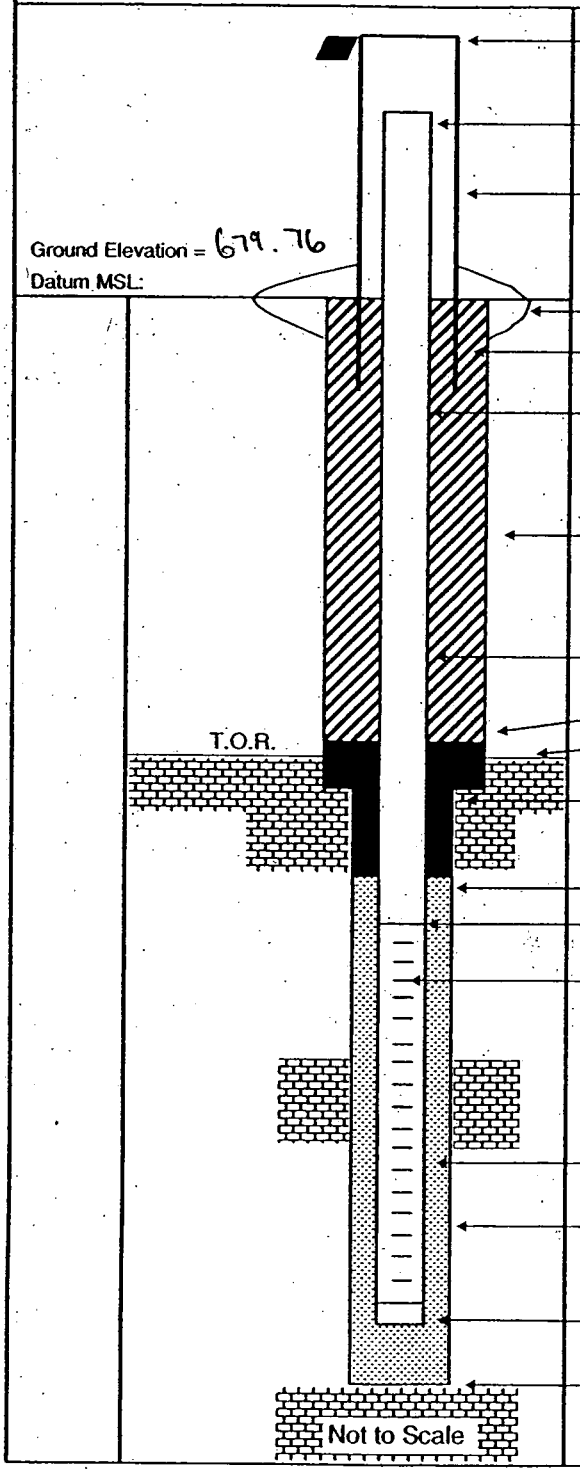

Elevation of Top of Casing: 682.82

Stick Up of Casing Above Ground Surface: 2.53

Elevation of Top of Riser: 682.29

I.D. of Surface Casing: 4" SQUARE

Type of Surface Casing: STEEL

Type of Surface Seal: 4'x4'x6" PAD

I.D. of Permanent Casing: NA

I.D. of Riser: 2"

Type of Riser: PVC

Borehole Diameter: 6" (0-5') 5" (5'-15')

Type of Backfill: GROUT

Elevation / Depth Top of Seal: 677.76 / 2'

Elevation / Depth Top of Bedrock: 672.76 / ≈7'

Type of Seal: BENT. CHIPS

Elevation / Depth of Top of Filter Pack: 675.76 / 4'

Elevation / Depth of Top of Screen: 674.76 / 5'

Type of Screen: PVC

Slot Size x Length: .20 x 10'

I.D. of Screen: 2"

Type of Filter Pack: No. 20-40 SAND

Diameter of Hole in Bedrock: Core / Ream: 5"

Elevation / Depth of Bottom of Screen: 664.76 / 15'

Elevation / Total Depth of Borehole: 664.76 / 15'

Tetra Tech NUS, Inc.

BORING LOG

PROJECT NAME: NSWC CRANE
PROJECT NUMBER: N9060 CTO 0279
DRILLING COMPANY: BOWSER MORNER
DRILLING RIG: Rotosonic

BORING NUMBER: 13MWT12
DATE: 3/27/03
GEOLOGIST: BOB BALKOVEC
DRILLER: DAVE S.

Sample No. and Type or RQD	Depth (Ft.) or Run No.	Blows / 6" or RQD (%)	Sample Recovery / Sample Length	Lithology Change (Depth /Ft.) or Screened Interval	Soil Density/ Consistency or Rock Hardness	Color	Material Classification	USCS*	Remarks	PID/FID Reading (ppm) Sample	Sample BZ	Borehole**	Driller BZ**
	1				MOIST	BR	TOP .5' TOPSOIL	ML	16" 0-10'	0.0			
	2				M. STIFF	LT	.5'-7' SILTY CLAY W/SS. FRAGS	CL	FILL .5'-2.5'				
	3				DRY	BR	SOME SAND						
	4												
S-1 0930	5		4.7' / 5'									0.0	0.0
	6					BRN	NO SS OR SAND	CL		0.0			
	7					RED							
	8				HARD	YELLOW	7'-10' SANDSTONE W/	VBR	ROCK @ 7'				
	9					GRAY	CLAYSTONE SEAMS						
S-2 0939	10		5' / 5'		DRY								
	11					G.	SANDSTONE 10-10.5'	BR		0.0			
	12		70% RQD			GRAY	SILTSTONE 10.5-14.5'						
C-1	13		@ 1014		SOFT + WET				POSSIBLE WATER @ 13'				
	14												
	15		5' / 5'			YELL							
	16				HARD	GR	SANDSTONE 14.5'-16'			0.0			
	17		64% RQD			GRAY	16'-18.5' SILTSTONE		MODERATE FRACT. 16'-19.5'				
C-2	18		@ 1027										
	19												
	20		4.9' / 5'				18.5-20' SANDSTONE						
				TD 20'			WELL SET @ 20' 2" PVC						
							SCREENED 10'-20'						
							SAND 8'						
							BENT ~ 4'						

* When rock coring, enter rock brokeness.

** Include monitor reading in 6 foot intervals @ borehole. Increase reading frequency if elevated reponse read.

Remarks:

Drilling Area Background (ppm): 0.0

Converted to Well: Yes X No ____ Well I.D. #: 13MWT12

Tetra Tech NUS, Inc.

BEDROCK
MONITORING WELL SHEET

WELL No.: 13MW712

PERMIT No:

PROJECT:	NSWC CRANE	DRILLING Co.:	BOWSER MORNER	BORING No.:	13MW712
PROJECT No.:	9060 CTO 0279	DRILLER:	DAVE S	DATE COMPLETED:	3/27/03
SITE:	SWMU 13	DRILLING METHOD:	ROTOSONIC	NORTHING:	1310080.207
GEOLOGIST:	B. BALKOVEC	DEV. METHOD:	WHALE PUMP	EASTING:	302357.4.945

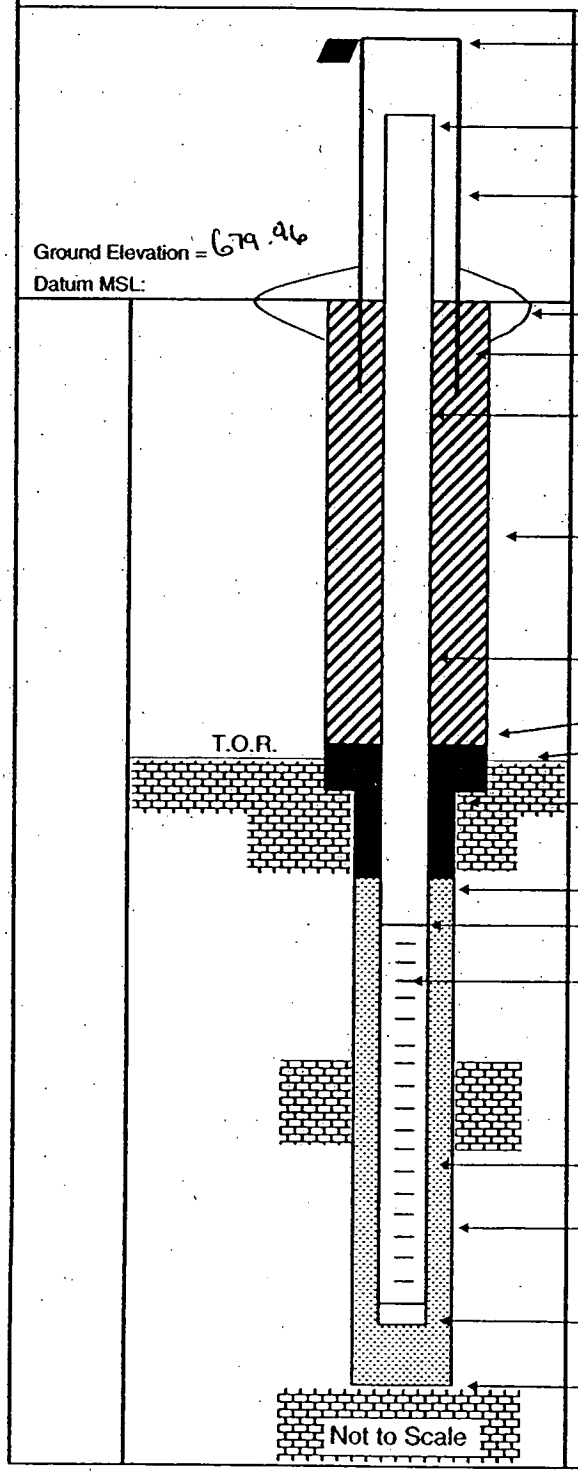

Elevation of Top of Casing: 682.66

Stick Up of Casing Above Ground Surface: 2.16

Elevation of Top of Riser: 682.12

I.D. of Surface Casing: 4" SQUARE

Type of Surface Casing: STEEL

Type of Surface Seal: 4'x4'x6" PAD

I.D. of Permanent Casing: NA

I.D. of Riser: 2"

Type of Riser: PVC

Borehole Diameter: 6" (0-10') 5" (10'-20')

Type of Backfill: GROUT/CEMENT

Elevation / Depth Top of Seal: 675.96 / 4'

Elevation / Depth Top of Bedrock: 672.96 / 7'

Type of Seal: BENT. CHIPS

Elevation / Depth of Top of Filter Pack: 671.96 / 8'

Elevation / Depth of Top of Screen: 669.96 / 10'

Type of Screen: PVC

Slot Size x Length: .20 x 10'

I.D. of Screen: 2"

Type of Filter Pack: No. 20-40 SAND

Diameter of Hole in Bedrock: Core / Ream: 5"

Elevation / Depth of Bottom of Screen: 659.96 / 20'

Elevation / Total Depth of Borehole: 659.96 / 20'

Tetra Tech NUS, Inc.

BORING LOG

PROJECT NAME: NSWC CRANE
PROJECT NUMBER: N9060 CTO 0279
DRILLING COMPANY: BOWSER MORNER
DRILLING RIG: [redacted] HSA Rig
BORING NUMBER: 13MW713
DATE: 4/23/03
GEOLOGIST: BOB BALKOVEC
DRILLER: DENNIS SINK

Sample No. and Type or RQD	Depth (Ft.) or Run No.	Blows / 6" or RQD (%)	Sample Recovery / Sample Length	Lithology Change (Depth /Ft.) or Screened Interval	MATERIAL DESCRIPTION: Soil Density/ Consistency or Rock Hardness	Color	Material Classification	USCS*	Remarks	PID/FID Reading (ppm): Sample	Sampler BZ	Borehole**	Driller BZ**
	1	3 / 3				BR	.5' TOP SOIL	ML		0.0	0.0		
S-1 1240	2	3 / 4	1.5' / 2'				5'-3.5' SILTY CLAY	CL		0.0			
	3	3 / 5					↓	L					
S-2 1242	4	7 / 7	2' / 2'			YEL	3.5'-6' SANDY SILT	ML		0.0		0.0	0.0
	5	1 / 1				GR + GRAY							
S-3 1248	6	3 / 5	1.6' / 2'							0.0			
	7	14 / 25			MOIST	YEL	6'-8' F-SAND	SP					
S-4 1302	8	27 / 31	2' / 2'		V. DENSE	GR				0.0			
	9	22 / 20			WET		F-SAND W/ SOME SILT	SM	WATER @ 10'				
S-5 1304	10	7 / 5	2' / 2'		DENSE		S.S. FRAGS. (8'-10.5')			0.0			
	11	17 / 22				BLK	COAL 10.5'-12.5'						
S-6 1321	12	36 / 21	2' / 2'		DRY					0.0			
	13	22 / 30			HARD	GRAY	12.5'-15' SHALE		REFUSAL @ 13'	0.0			
S-7 1335	14	50/.4	.5' / .8'				SHALE @ 13'		ROCK @ 12.5'				
	15						WELL AUGERED TO 19'						
	16						SHALE MATERIAL IN						
	17						CUTTINGS						
	18												
1350	19												
				T.D. 19'			WELL SET @ 18' 2" PVC						
							SCREENED 8'-18'						
							SAND 6'						
							BENT 2'						

* When rock coring, enter rock brokeness.

** Include monitor reading in 6 foot intervals @ borehole. Increase reading frequency if elevated reponse read.

Remarks:

Drilling Area Background (ppm): 0.0

Converted to Well: Yes X No

Well I.D. #: 13MW713

Tetra Tech NUS, Inc.

BEDROCK MONITORING WELL SHEET

WELL No.: 13MW713

PERMIT No:

PROJECT:	NSWC CRANE	DRILLING Co.:	BOWSER MORNER	BORING No.:	13MW713
PROJECT No.:	9060 CTO 0279	DRILLER:	DENNIS SZUK	DATE COMPLETED:	4/23/03
SITE:	SWMU 13	DRILLING METHOD:	HSA ~~ROTOSONIC~~	NORTHING:	1304441.270
GEOLOGIST:	B. BALKOVEC	DEV. METHOD:	WATERRA	EASTING:	302463.605

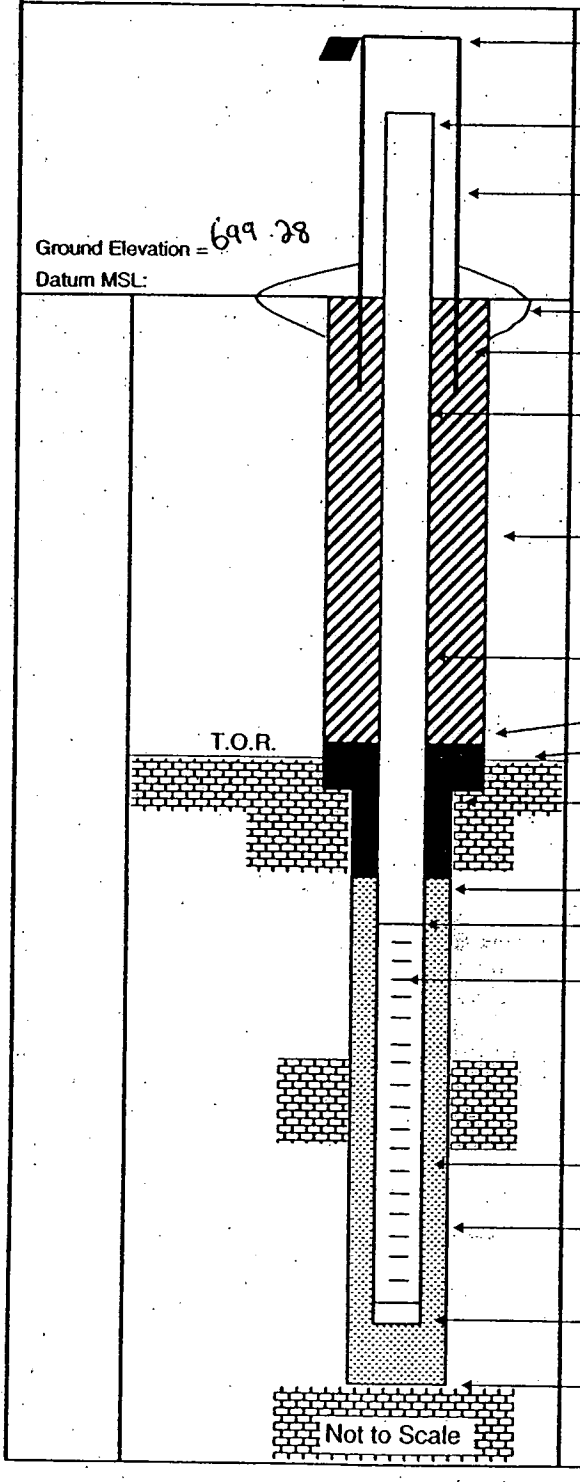

Elevation of Top of Casing: 702.40

Stick Up of Casing Above Ground Surface: 2.70

Elevation of Top of Riser: 701.98

I.D. of Surface Casing: 4" SQUARE

Type of Surface Casing: STEEL

Type of Surface Seal: 4'x4'x6" PAD

I.D. of Permanent Casing: NA

I.D. of Riser: 2"

Type of Riser: PVC

Borehole Diameter: 6"

Type of Backfill: CEMENT

Elevation / Depth Top of Seal: 697.28 / 2'

Elevation / Depth Top of Bedrock: 686.78 / 12.5'

Type of Seal: BENTONITE

Elevation / Depth of Top of Filter Pack: 643.28 / 6'

Elevation / Depth of Top of Screen: 641.28 / 8'

Type of Screen: PVC

Slot Size x Length: .20 x 10'

I.D. of Screen: 2"

Type of Filter Pack: No. 20-40 SAND

Diameter of Hole in Bedrock: Core / Ream: 6"

Elevation / Depth of Bottom of Screen: 681.28 / 18'

Elevation / Total Depth of Borehole: 680.28 / 19'

Tetra Tech NUS, Inc.

BORING LOG

PROJECT NAME: NSWC CRANE
PROJECT NUMBER: N9060 CTO 0279
DRILLING COMPANY: BOWSER MORNER
DRILLING RIG: ROTOSONIC

BORING NUMBER: 13MWT14
DATE: 3/31/03
GEOLOGIST: BOB BALKOVEC
DRILLER: DAVE S.

Sample No. and Type or RQD	Depth (Ft.) or Run No.	Blows / 6" or RQD (%)	Sample Recovery / Sample Length	Lithology Change (Depth /Ft.) or Screened Interval	MATERIAL DESCRIPTION: Soil Density/ Consistency or Rock Hardness	Color	Material Classification	USCS*	Remarks	PID/FID Reading (ppm): Sample	Sampler BZ	Borehole**	Driller BZ**
	1					BR	5' TOP SOIL	ML	4" SAMPLE TO 17.5'	0.0			
	2						5'-3' CLAY & SILT						
	3												
	4					YELL BRN	3-5' SANDY SILT W/ SOME						
S-1 0914	5		4.8' / 5'			LT. GRAY	CLAY						
	6				MOIST + MISTAR	BR	5-6.5' SANDY SILT W/ S.S FRAGS	ML	WEATHERED S.S.	0.0			
	7				SOFT	LT GRAY	6.5-7' SILT	ML					
	8				WET +	BR	7-9.5' SILT + SAND W/ S.S	SM	THIN LAMINATION				
	9			▼ ?	MISTAR		FRAGS		POSSIBLE @ 9'				
S-2 0921	10		4.9' / 5'	11=11=11=		LT GRAY	9.5-10' SILTSTONE	ML	RAN @ 9.5'				
	11				SOFT +	DK	10-15' SHALEY SILTSTONE			0.0			
	12				DRY	LT							
	13					GRAY							
	14												
S-3 0835	15		5' / 5'										
	16					LT. DK	15-17' SHALE						
	17					GRAY							
S-4 0944	17.5		2' / 2.5'	▼	HARD	GRAY	17-17.5' SANDSTONE		REFUSAL @ 17.5'				
	18						SAND + SILT						
	19						MATRIX						
R-1	20												
	21												
	22												
W15	23												
				TD 23'									

* When rock coring, enter rock brokeness.

** Include monitor reading in 6 foot intervals @ borehole. Increase reading frequency if elevated reponse read.

Drilling Area Background (ppm): 0.0

Remarks: 5" TO 23' SET WELL @ 23' SCREENED 13'-23'
SAND TO 11'
BEAD TO 9' VOL CLAY TO 8'

Converted to Well: Yes X No ___ Well I.D. #: 13MWT14

Tetra Tech NUS, Inc.

BEDROCK
MONITORING WELL SHEET

WELL No.: 13MWT14

PERMIT No:

PROJECT:	NSWC CRANE	DRILLING Co.:	BOWSER MORNER	BORING No.:	13MWT14
PROJECT No.:	9060 CTO 0279	DRILLER:	DAVE S.	DATE COMPLETED:	3/31/03
SITE:	SWMU 13	DRILLING METHOD:	ROTOSONIC	NORTHING:	1309142.232
GEOLOGIST:	B. BALKOVEC	DEV. METHOD:	WATTERA	EASTING:	302410.167

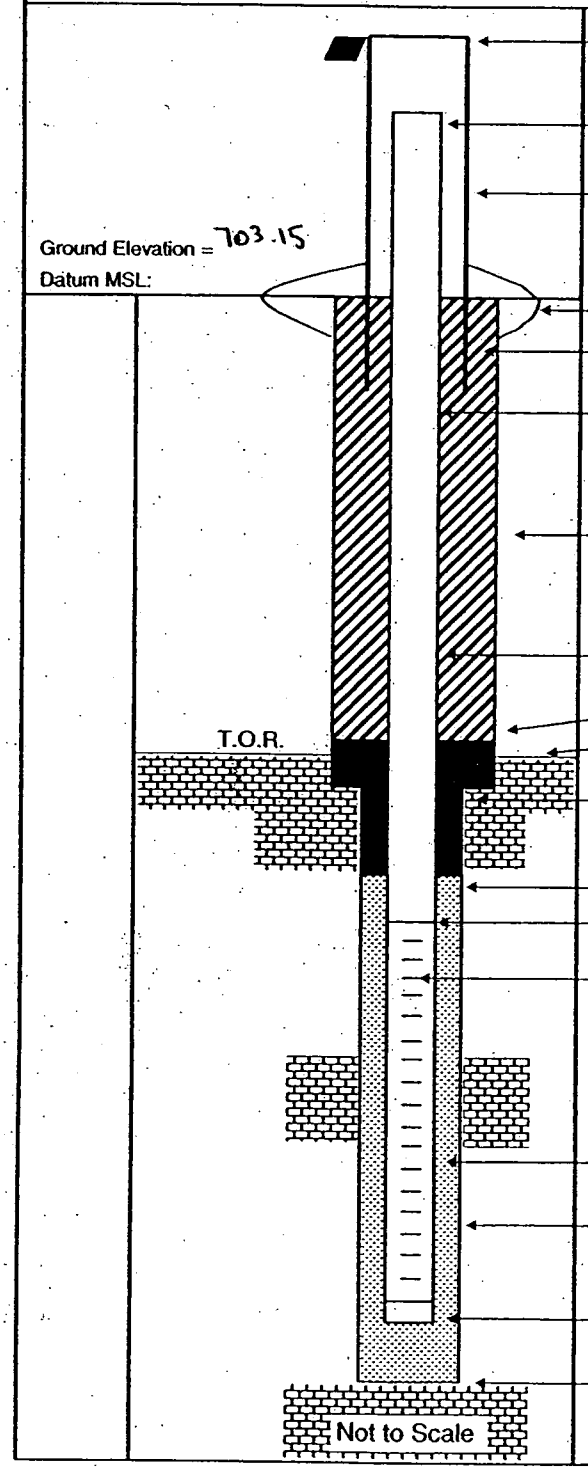

Elevation of Top of Casing: 705.98

Stick Up of Casing Above Ground Surface: 2.35

Elevation of Top of Riser: 705.50

I.D. of Surface Casing: 4" SQUARE

Type of Surface Casing: STEEL

Type of Surface Seal: 4'x4'x6" PAD

I.D. of Permanent Casing: NA

I.D. of Riser: 2"

Type of Riser: PVC

Borehole Diameter: 5"

Type of Backfill: VOL CLAY (2'-4')

Elevation / Depth Top of Seal: 694.15 / 9'

Elevation / Depth Top of Bedrock: 693.65 / 9.5'

Type of Seal: BENT. CHIPS

Elevation / Depth of Top of Filter Pack: 692.15 / 11'

Elevation / Depth of Top of Screen: 690.15 / 13'

Type of Screen: PVC

Slot Size x Length: .20 x 10'

I.D. of Screen: 2"

Type of Filter Pack: No. 20-40 SAND

Diameter of Hole in Bedrock:
Core / Ream: 5"

Elevation / Depth of Bottom of Screen: 680.15 / 23'

Elevation / Total Depth of Borehole: 680.15 / 23'

Tetra Tech NUS, Inc.

BORING LOG

PROJECT NAME: NSWC CRANE
PROJECT NUMBER: N9060 CTO 0279
DRILLING COMPANY: BOWSER MORNER
DRILLING RIG: ROTOSONIC

BORING NUMBER: 13MW T15
DATE: 3/25/03
GEOLOGIST: BOB BALKOVEC
DRILLER: DAVE S.

Sample No. and Type or RQD	Depth (Ft.) or Run No.	Blows / 6" or RQD (%)	Sample Recovery / Sample Length	Lithology Change (Depth /Ft.) or Screened Interval	MATERIAL DESCRIPTION: Soil Density/ Consistency or Rock Hardness	Color	Material Classification	USCS*	Remarks	PID/FID Reading (ppm): Sample	Sampler BZ	Borehole**	Driller BZ**
	1				DRY M.STIFF	BR	SILTY CLAY 0-2.5'	CL	6" LASTING 0-15'	0.0			
	2						T-SAND						
	3					YELL	CLAY W/ SILT 2.5-7.5'						
	4					OR				1.7			
S1 0237	5		4.5 / 5'							0.0			
	6					YELL OR		CL	MOTTLED	0.0			
	7					LT							
	8					GRAY							
	9						CLAY W/ INTERBEDDED						
S-2 1236	10		5' / 5'				SILT SEAMS (HARD FORM)						
	11							CL		0.0			
	12												
	13												
	14				SOFT	GRAY	SILTSTONE 13'-18'	RK	RK				
S-3 1245	15		5' / 5'		DRY				6" TO 15'				
	16						SILTY MATERIAL		5" TO 25'				
	17								WL @ 17' @ 1341				
	18								AFTER FLUSHING				
	19					BLACK	BLACK MATERIAL COMING		@ 25'				
R-1	20						OUT OF THE HOLE						
	21					GRAY	SILTY MATERIAL						
	22												
	23					LT							
	24					GRAY							
	25												

* When rock coring, enter rock brokeness.

** Include monitor reading in 6 foot intervals @ borehole. Increase reading frequency if elevated reponse read.

Drilling Area Background (ppm): 0.0

Remarks: 4" TO 15' FOLLOWED BY 6" WELL SET @ 25' (15-25) SAND TO 13 BENT TO 11 WELL CAVE TO 4'

Converted to Well: Yes X No ___ Well I.D. #: ___

Tetra Tech NUS, Inc.

BEDROCK MONITORING WELL SHEET

WELL No.: 13MW715

PERMIT No:

PROJECT:	NSWC CRANE	DRILLING Co.:	BOWSER MORNER	BORING No.:	13MW715
PROJECT No.:	9060 CTO 0279	DRILLER:	DAVES	DATE COMPLETED:	3/25/03
SITE:	SWMU 13	DRILLING METHOD:	ROTOSONIC	NORTHING:	1304565.518
GEOLOGIST:	B. BALKOVEC	DEV. METHOD:	WHALE PUMP	EASTING:	3023717.803

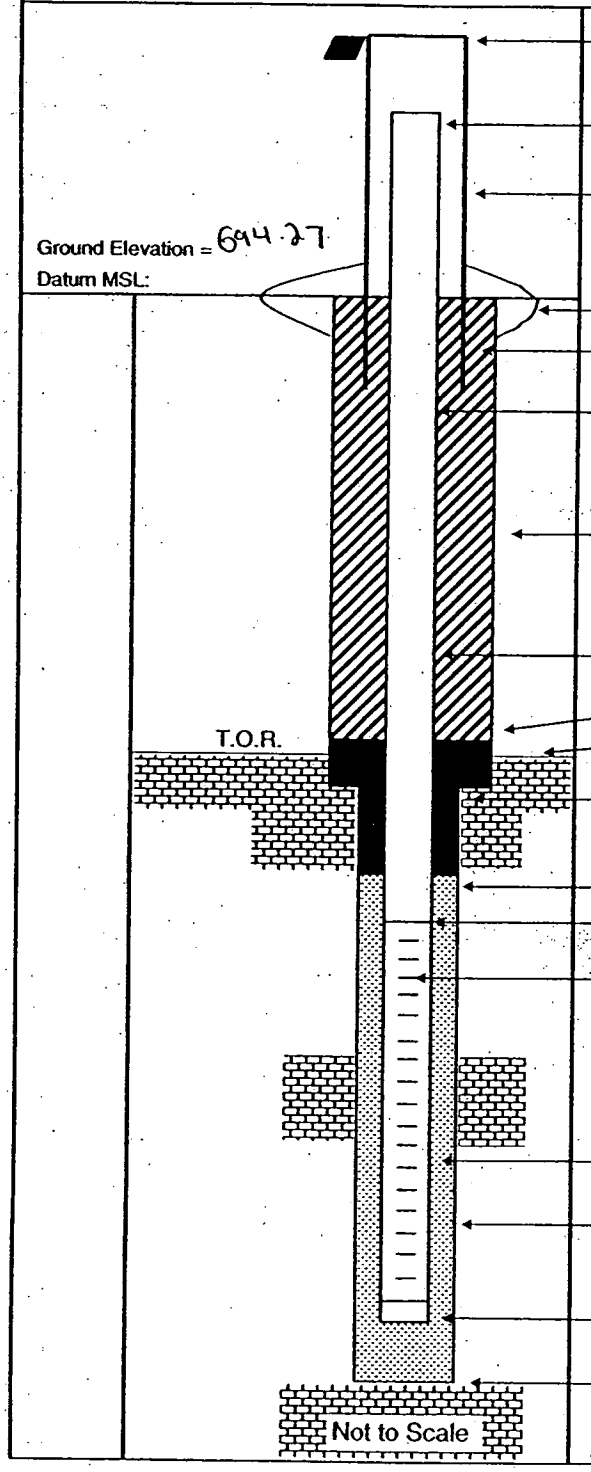

Elevation of Top of Casing: 697.16

Stick Up of Casing Above Ground Surface: 2.38'

Elevation of Top of Riser: 696.65

I.D. of Surface Casing: 4" SQUARE

Type of Surface Casing: STEEL

Type of Surface Seal: 4'x4'x6" PAD

I.D. of Permanent Casing: NA

I.D. of Riser: 2"

Type of Riser: PVC

Borehole Diameter: 6" (0-15') 5" (15'-25')

Type of Backfill: VOL-CLAY (4'-11')

Elevation / Depth Top of Seal: 683.27 / 11'

Elevation / Depth Top of Bedrock: 681.27 / 13'

Type of Seal: BENT CHIPS

Elevation / Depth of Top of Filter Pack: 681.27 / 13'

Elevation / Depth of Top of Screen: 679.27 / 15'

Type of Screen: PVC

Slot Size x Length: .20 x 10'

I.D. of Screen: 2"

Type of Filter Pack: No. 20-40 SAND

Diameter of Hole in Bedrock: Core / Ream: 5"

Elevation / Depth of Bottom of Screen: 669.27 / 25'

Elevation / Total Depth of Borehole: 669.27 / 25'

Tetra Tech NUS, Inc.

BORING LOG

PROJECT NAME: NSWC CRANE
PROJECT NUMBER: N9060 CTO 0279
DRILLING COMPANY: BOWSER MORNER
DRILLING RIG: ROTOSONIC

BORING NUMBER: 13MWT16
DATE: 5/27/03
GEOLOGIST: BOB BALKOVEC
DRILLER: DAVE S.

Sample No. and Type or RQD	Depth (Ft.) or Run No.	Blows / 6" or RQD (%)	Sample Recovery / Sample Length	Lithology Change (Depth /Ft.) or Screened Interval	MATERIAL DESCRIPTION: Soil Density/ Consistency or Rock Hardness	Color	Material Classification	USCS *	Remarks	PID/FID Reading (ppm): Sample	Sampler BZ	Borehole**	Driller BZ**
	0						DRILLED 6" CASING TO 15'				0.0		0.0
							WASHED OUT HOLE						
							REFER TO 13MWT17						
							FOR COMPLETE						
							LITHOLOGY						
							0-5' SANDY MATERIAL						
							5'-10' CLAYEY MATERIAL						
									HARD DRILLING				
							10-15' SILTY MATERIAL		@ 10'				0.0
	15												
				T.D. 15'			SET WELL @ 15' 2" PVC						
							SCREENED 5'-15'						
							SAND TO 4'						
							BENT TO 2'						

* When rock coring, enter rock brokeness.

** Include monitor reading in 6 foot intervals @ borehole. Increase reading frequency if elevated reponse read.

Remarks:

Drilling Area Background (ppm): 0.0

Converted to Well: Yes X No ____ Well I.D. #: 13MWT16

Tetra Tech NUS, Inc.

BEDROCK
MONITORING WELL SHEET

WELL No.: 13MWT16

PERMIT No:

PROJECT:	NSWC CRANE	DRILLING Co.:	BOWSER MORNER	BORING No.:	13MWT16
PROJECT No.:	9060 CTO 0279	DRILLER:	DAVE S.	DATE COMPLETED:	3/27/03
SITE:	SWMU 13	DRILLING METHOD:	ROTOSONIC	NORTHING:	1304854.276
GEOLOGIST:	B. BALKOVEC	DEV. METHOD:	WHALE PUMP	EASTING:	3023341.96

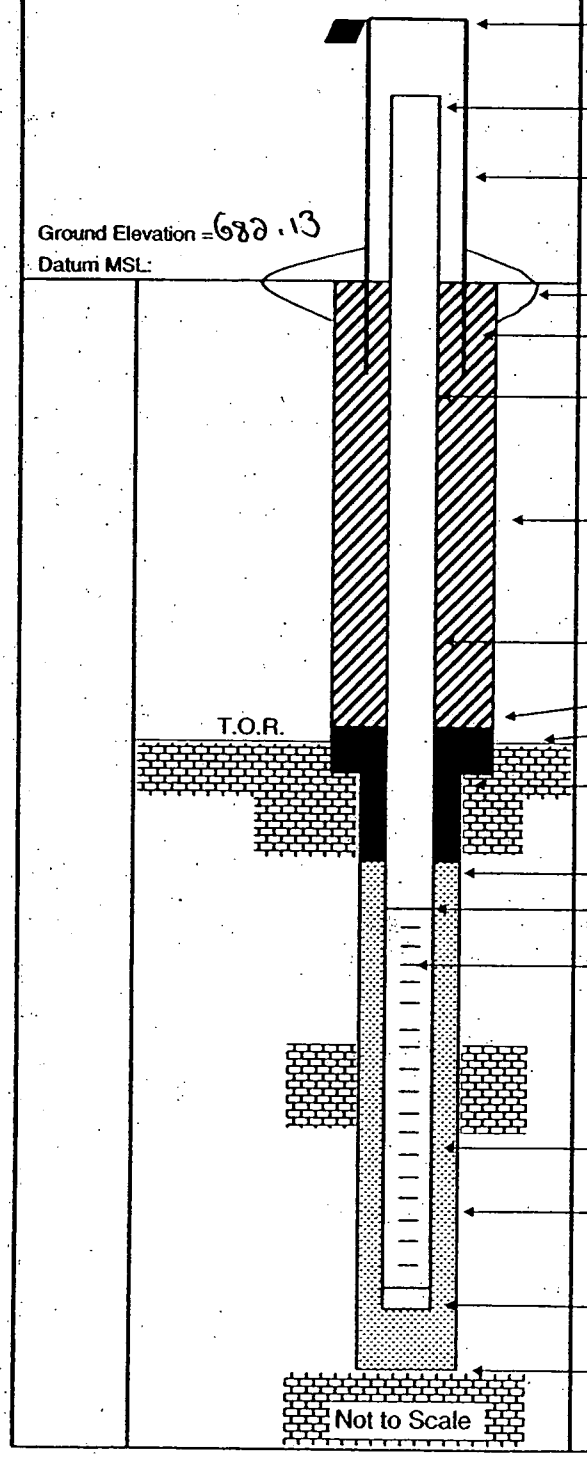

Elevation of Top of Casing: 684.83

Stick Up of Casing Above Ground Surface: 2.22

Elevation of Top of Riser: 684.35

I.D. of Surface Casing: 4" SQUARE

Type of Surface Casing: STEEL

Type of Surface Seal: 4'x4'x6" PAD

I.D. of Permanent Casing: NA

I.D. of Riser: 2"

Type of Riser: PVC

Borehole Diameter: 5"

Type of Backfill: GROUT

Elevation / Depth Top of Seal: 680.13 / 2'

Elevation / Depth Top of Bedrock: 672.13 / 10'

Type of Seal: BENT CHIPS

Elevation / Depth of Top of Filter Pack: 678.13 / 4'

Elevation / Depth of Top of Screen: 677.13 / 5'

Type of Screen: PVC

Slot Size x Length: .20 x 10'

I.D. of Screen: 2"

Type of Filter Pack: No. 20-40 SAND

Diameter of Hole in Bedrock:
Core / Ream: 5"

Elevation / Depth of Bottom of Screen: 667.13 / 15'

Elevation / Total Depth of Borehole: 667.13 / 15'

Tetra Tech NUS, Inc.

BORING LOG

PROJECT NAME: NSWC CRANE
PROJECT NUMBER: N9060 CTO 0279
DRILLING COMPANY: BOWSER MORNER
DRILLING RIG: ROTOSONIC

BORING NUMBER: 13MW717
DATE: 3/26/03
GEOLOGIST: BOB BALKOVEC
DRILLER: DAVE S.

Sample No. and Type or RQD	Depth (Ft.) or Run No.	Blows / 6" or RQD (%) *	Sample Recovery / Sample Length	Lithology Change (Depth /Ft.) or Screened Interval	MATERIAL DESCRIPTION: Soil Density/ Consistency or Rock Hardness	Color	Material Classification	USCS *	Remarks	PID/FID Reading (ppm): Sample	Sampler BZ	Borehole**	Driller BZ**
	1				DRY & LOSE	BLK	CINDERS + GRAVEL .5'	GM	4" SAMPLE 0-.5'	0.0			
	2				↓	↓	↓	↓	.5'-2' FILL	↓			
	3					BR	SANDSTONE FRAGS						
	4					↓	↓						
S1 1506	5		1.5'/5'		↓	↓	↓	↓		↓			
	6				DRY M. STIFF	YELL OR	SILTY CLAY 5-8.5	CL	MOD PLASTICITY	0.0			
	7				↓	& LT	↓	↓		↓			
	8				↓	GRAY	↓	↓					
	9				STIFF	↓	CLAYEY SILT 8.5-10'	ML					
S2 1540	10		5'/5'	▼	↓	↓	↓ T-SAND	↓		↓			
	11			WET	↓	YELL OR	SILT - SANDSTONE	PX	WET 10-11.5'	0.0			
	12				↓	& LT GRAY	FRAGS 10-13'	↓	WELL SET 6" TO 8'	↓			
	13				DRY & LOSE	BLK	COAL SEAM 13-13.5'		+ BEAM 8'-18'				
	14				↓	GRAY	13.5'-15' SILT STONE		POSS. WATER @ 10'				
S3 1550	15		5'/5'		↓	↓	HIGH WEATHERED			↓			
	16					GRAY	15'-18' SILTY MATERIAL						
	17					↓	COMING OUT OF THE						
	18					↓	CASING	↓					
				T.D. 18'									
							WATER TO 11 @ 1558						
							WELL SET @ 18' 2" PVC						
							SCREENED 8'-18'						
							SAND TO 6'						
							BENT TO 3'						

* When rock coring, enter rock brokeness.

** Include monitor reading in 6 foot intervals @ borehole. Increase reading frequency if elevated reponse read.

Remarks: 1

Drilling Area Background (ppm): 0.0

Converted to Well: Yes X No ___ Well I.D. #: 13MW717

Tetra Tech NUS, Inc.

BEDROCK
MONITORING WELL SHEET

WELL No.: 13MWT17

PERMIT No:

PROJECT:	NSWC CRANE	DRILLING Co.:	BOWSER MORNER	BORING No.:	13MWT17
PROJECT No.:	9060 CTO 0279	DRILLER:	DAVE S.	DATE COMPLETED:	3/26/03
SITE:	SWMU 13	DRILLING METHOD:	ROTOSONIC	NORTHING:	1309605.272
GEOLOGIST:	B. BALKOVEC	DEV. METHOD:	WATTERA	EASTING:	3023123.466

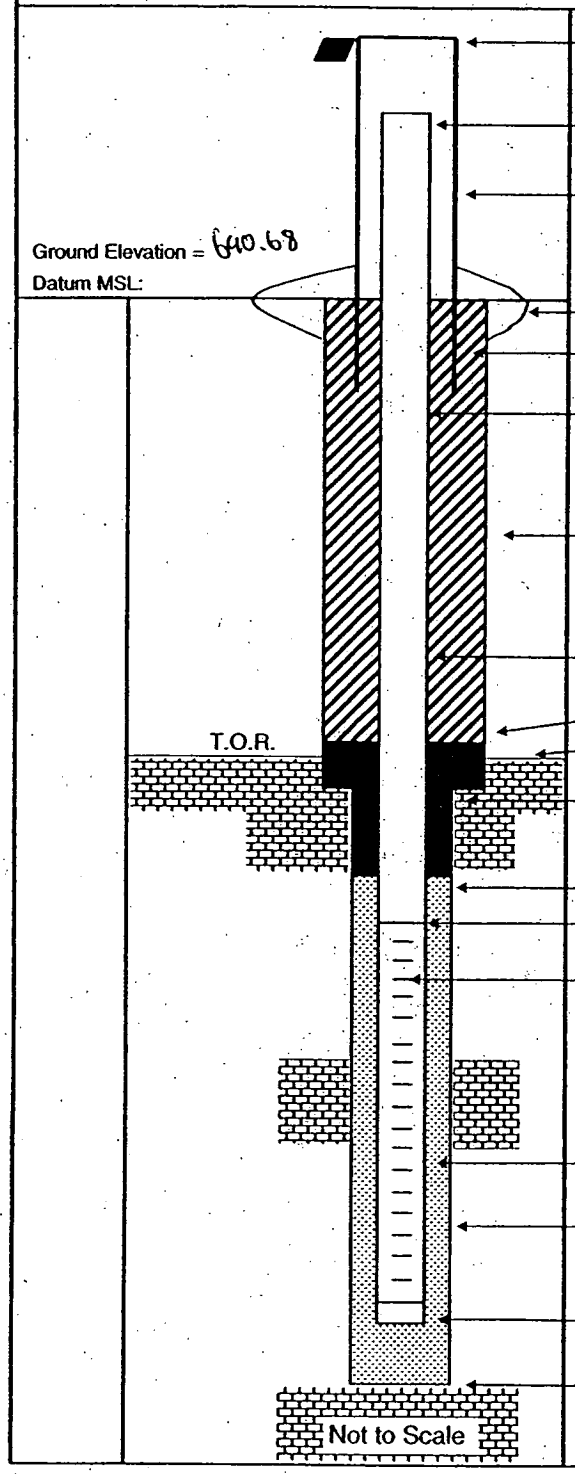

Elevation of Top of Casing: 643.68

Stick Up of Casing Above Ground Surface: 2.37'

Elevation of Top of Riser: 643.01

I.D. of Surface Casing: 4" SQUARE

Type of Surface Casing: STEEL

Type of Surface Seal: 4'x4'x6" PAD

I.D. of Permanent Casing: NA

I.D. of Riser: 2"

Type of Riser: PVC

Borehole Diameter: 6" 0-8'
5" 8'-18'

Type of Backfill: CEMENT

Elevation / Depth Top of Seal: 687.68 / 3'

Elevation / Depth Top of Bedrock: 680.68 / 10'

Type of Seal: BENT. CHIPS

Elevation / Depth of Top of Filter Pack: 684.68 / 6'

Elevation / Depth of Top of Screen: 682.68 / 8'

Type of Screen: PVC

Slot Size x Length: .20 x 10'

I.D. of Screen: 2"

Type of Filter Pack: No. 20-40 SAND

Diameter of Hole in Bedrock:
Core / Ream: 5" CORE 10'-15'
5" REAM 15'-18'

Elevation / Depth of Bottom of Screen: 672.68 / 18'

Elevation / Total Depth of Borehole: 672.68 / 18'

Tetra Tech NUS, Inc.

BORING LOG

PROJECT NAME: NSWC CRANE
PROJECT NUMBER: N9060 CTO 0279
DRILLING COMPANY: BOWSER MORNER
DRILLING RIG: Roto Sonic

BORING NUMBER: 13MW718
DATE: 3/25/03 - 3/26/03
GEOLOGIST: BOB BALKOVEC
DRILLER: DAVE S.

Sample No. and Type or RQD	Depth (Ft.) or Run No.	Blows / 6" or RQD (%)	Sample Recovery / Sample Length	Lithology Change (Depth /Ft.) or Screened Interval	MATERIAL DESCRIPTION: Soil Density/ Consistency or Rock Hardness	Color	Material Classification	USCS*	Remarks	PID/FID Reading (ppm): Sample	Sample BZ	Borehole**	Driller BZ*
	1				M.STIFF	YELL	0-8' SILTY CLAY	CL	MOTTLED	0.0			
	2				DRY	GR			6" CASING 0-20'				
	3					LT GRAY							
	4												
S-1 1634	5		4.5'/5'										
	6									0.0		0.0	0.0
	7												
	8												
1/25	9				M.STIFF		8'-10' INTERBEDDED	ML					
S-2 1638	10		5'/5'				CLAY + SILT						
	11				M.STIFF	YELL	WEATHERED SILTSTONE	WR		0.0			
	12				MOIST	GR	(10'-15')						
	13					GRAY							
	14					PURPLE							
S-3 1654	15		4.5'/5'										
	16				HARD	LT	SILTSTONE 15'-20'	BR	COMPETENT ROCK	0.0			
	17					GRAY			@ 15'				
	18												
	19								DRY 0-20'				
S-4 1716	20		5'/5'										
	21				HARD	LT	SANDSTONE 20-21.5'	MS		0.0			
	22		22'/RQD			BR							
1/26 C-1	23		08:04		WET	LT GRAY	SHALE 21.5'-25'	BR	POSSIBLE WATER				
	24				HARD				ZONE.				
	25		5'/5'										

* When rock coring, enter rock brokeness.

** Include monitor reading in 6 foot intervals @ borehole. Increase reading frequency if elevated reponse read.

Drilling Area Background (ppm): 0.0

Remarks:

Converted to Well: Yes ✓ No _____ Well I.D. #: 13MW718

Tetra Tech NUS, Inc.

BORING LOG

PROJECT NAME: NSWC CRANE
PROJECT NUMBER: N9060.CTO 0279
DRILLING COMPANY: BOWSER MORNER
DRILLING RIG: Rotary Sonic

BORING NUMBER: B MW718
DATE: 3/26/03
GEOLOGIST: BOB BALKOVEC
DRILLER: DAVE S.

Sample No. and Type or RQD	Depth (Ft.) or Run No.	Blows / 6" or RQD (%)	Sample Recovery / Sample Length	Lithology Change (Depth /Ft.) or Screened Interval	MATERIAL DESCRIPTION: Soil Density/ Consistency or Rock Hardness	Color	Material Classification	U.S.C.S.*	Remarks	PID/FID Reading (ppm): Sample	Sampler BZ	Borehole**	Driller BZ**
	26				SOFT	LT GRAY	25'-27' SILTSTONE	VBR		0.0			
	27				↓	↓	↓	↓		↓			
	28					LT BR	27'-29.5' SANDSTONE	BR					
	29					↓		↓		↓			
	30		9.5' / 10'			BLK	29.5'-30' COAL	-					
				T.D. 30'									
							WELL SET @ 30' 2" PVC						
							SCREENED 20'-30'						
							SAND TO 18'						
							BENT TO 16'						
							VOL CHK TO 3'						

* When rock coring, enter rock brokeness.

** Include monitor reading in 6 foot intervals @ borehole. Increase reading frequency if elevated reponse read.

Drilling Area Background (ppm): 0.0

Remarks:

Converted to Well: Yes ✓ No ____ Well I.D. #: BMW718

Tetra Tech NUS, Inc.

BEDROCK
MONITORING WELL SHEET

WELL No.: 13MW118

PERMIT No:

PROJECT:	NSWC CRANE	DRILLING Co.:	BOWSER MORNER	BORING No.:	13MW118
PROJECT No.:	9060 CTO 0279	DRILLER:	DAVE S	DATE COMPLETED:	3/26/03
SITE:	SWMU 13	DRILLING METHOD:	ROTOSONIC	NORTHING:	1309326.980
GEOLOGIST:	B. BALKOVEC	DEV. METHOD:	WHALE PUMP	EASTING:	3023293.416

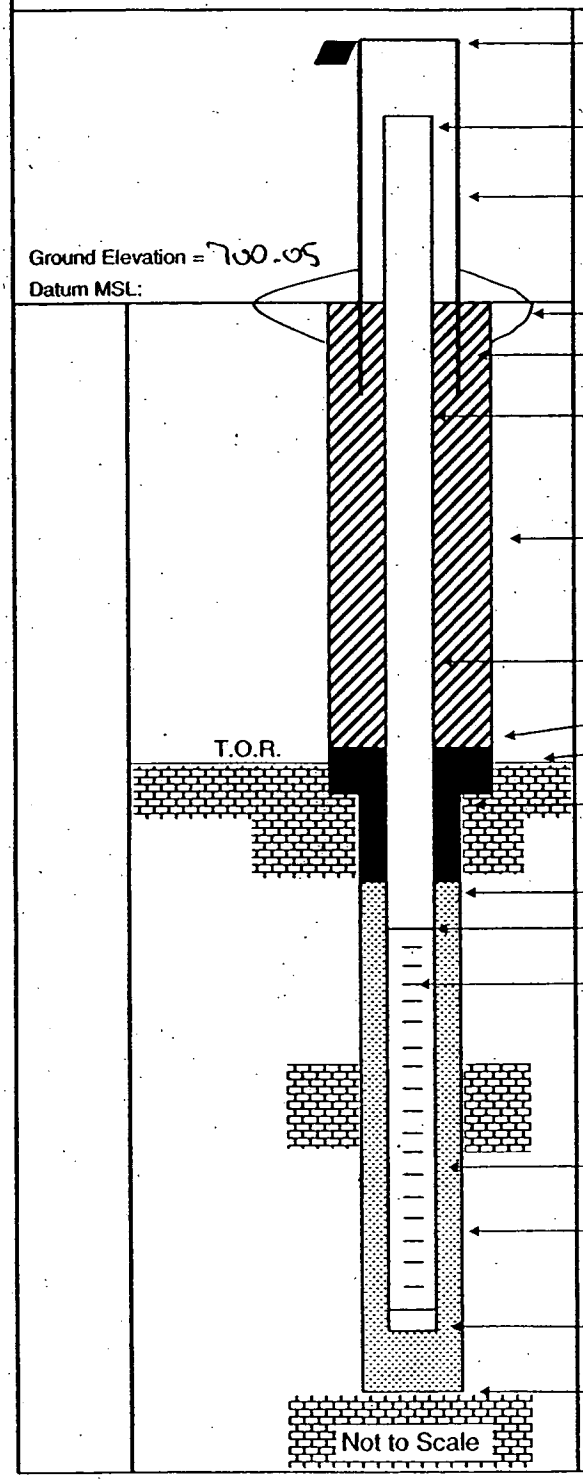

Elevation of Top of Casing: 703.43

Stick Up of Casing Above Ground Surface: 3.87'

Elevation of Top of Riser: 702.92

I.D. of Surface Casing: 4" SQUARE

Type of Surface Casing: STEEL

Type of Surface Seal: 4'x4'x6" PAD

I.D. of Permanent Casing: NA

I.D. of Riser: 2"

Type of Riser: PVC

Borehole Diameter: 6" 0-15' / 5" 15'-30'

Type of Backfill: VOL CLAY (3'-16')

Elevation / Depth Top of Seal: 684.05 / 16'

Elevation / Depth Top of Bedrock: 685.05 / 15'

Type of Seal: BENT. CHIPS

Elevation / Depth of Top of Filter Pack: 682.05 / 18'

Elevation / Depth of Top of Screen: 680.05 / 20'

Type of Screen: PVC

Slot Size x Length: .20 x 10'

I.D. of Screen: 2"

Type of Filter Pack: No. 20-40 SAND

Diameter of Hole in Bedrock: (Core) / Ream: 5"

Elevation / Depth of Bottom of Screen: 670.05 / 30'

Elevation / Total Depth of Borehole: 670.05 / 30'

Tetra Tech NUS, Inc.

BORING LOG

PROJECT NAME: NSWC CRANE
PROJECT NUMBER: N9060 CTO 0279
DRILLING COMPANY: BOWSER MORNER
DRILLING RIG: ROTOSONIC

BORING NUMBER: 13MW719
DATE: 3/31/03
GEOLOGIST: BOB BALKOVEC
DRILLER: DAVE S.

Sample No. and Type or RQD	Depth (Ft.) or Run No.	Blows / 6" or RQD (%)	Sample Recovery / Sample Length	Lithology Change (Depth /Ft.) or Screened Interval	MATERIAL DESCRIPTION: Soil Density/ Consistency or Rock Hardness	Color	Material Classification	USCS*	Remarks	PID/FID Reading (ppm): Sample	Sampler BZ	Borehole**	Driller BZ**
	1				DRY & SOFT	BR	.5' TOP SOIL	ML		0.0			
	2				MOIST M.STIFF	PALE LT	.5'-4' CLAYEY SILT + GRAVEL		(MOTTLED)				
	3					GRAY			FILL				
S1 1344	4		3.9' / 4'				4-5.5' SANDY SILT W/ SOME CLAY		WEATHERED S.S				
	5				DRY & M.STIFF		SANDY SILT + SS CHUNKS		6" TO 5'	0.0			
	6				HARD		5.5'-6' CLAYSTONE SEAM						
	7				DRY & M. DENSE	BR & TAN	SANDY SILT 6'-8'						
	8			?	MOIST &		SANDSTONE 7'-9'		WEATHERED @ 7.5'				
S2 1352	9		5' / 5'		M. DENSE	YELL BR		BR	HARD 8-9'				
	10				MOIST &		SANDY SILT 9-11'	ML	5" CORE 9-19'				
	11		61% RQD		M.STIFF								
C1	12		@1346		WET & SOFT		.5' SILT 11-11.5'	ML					
	13			?	WET & M.DENSE		11.5'-13' SILTY SAND + SSTONES	SM	POSS WATER @ 13'				
	14		4.9' / 5'		STIFF & DRY		SILTSTONE	BR	THIN LAM.				
	15					GRAY	SILTY SHALE	DR					
	16												
C2	17		50% RQD										
	18		@1420										
	19		4.7' / 5'										
				T.D. 19'			WELL SET @ 19' 2" PVC						
							SCREENED 9'-19'						
							SAND TO 7'						
							BENT CHIPS TO 2'						

* When rock coring, enter rock brokeness.

** Include monitor reading in 6 foot intervals @ borehole. Increase reading frequency if elevated reponse read.

Remarks:

Drilling Area Background (ppm): 0.0

Converted to Well: Yes X No

Well I.D. #: 13MW719

Tetra Tech NUS, Inc.

BEDROCK MONITORING WELL SHEET

WELL No.: 13MW714

PERMIT No:

PROJECT:	NSWC CRANE	DRILLING Co.:	BOWSER MORNER	BORING No.:	13MW714
PROJECT No.:	9060 CTO 0279	DRILLER:	DAVE S.	DATE COMPLETED:	3/31/03
SITE:	SWMU 13	DRILLING METHOD:	ROTOSONIC	NORTHING:	1308893.971
GEOLOGIST:	B. BALKOVEC	DEV. METHOD:	WATTERA	EASTING:	3023834.565

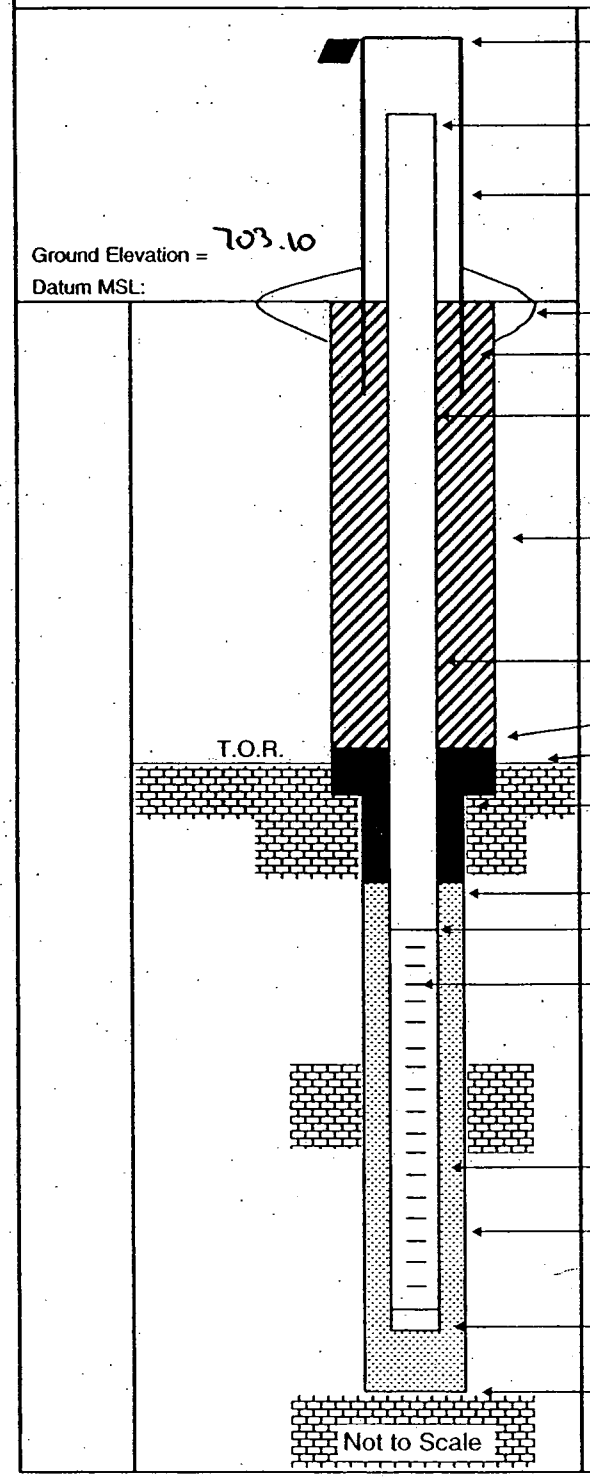

Elevation of Top of Casing: 706.32

Stick Up of Casing Above Ground Surface: 2.72'

Elevation of Top of Riser: 705.82

I.D. of Surface Casing: 4" SQUARE

Type of Surface Casing: STEEL

Type of Surface Seal: 4'x4'x6" PAD

I.D. of Permanent Casing: NA

I.D. of Riser: 2"

Type of Riser: PVC

Borehole Diameter: 6" to 5'
5" 5'-19'

Type of Backfill: CEMENT

Elevation / Depth Top of Seal: 701.1 / 2'

Elevation / Depth Top of Bedrock: 690.1 / 13'

Type of Seal: BENT-CHIPS

Elevation / Depth of Top of Filter Pack: 696.1 / 7'

Elevation / Depth of Top of Screen: 694.1 / 9'

Type of Screen: PVC

Slot Size x Length: .20 x 10'

I.D. of Screen: 2"

Type of Filter Pack: No. 20-40 SAND

Diameter of Hole in Bedrock:
Core / Ream: 5"

Elevation / Depth of Bottom of Screen: 684.1 / 19'

Elevation / Total Depth of Borehole: 684.1 / 19'

Tetra Tech NUS, Inc.

BORING LOG

PROJECT NAME: NSWC CRANE
PROJECT NUMBER: N9060 CTO 0279
DRILLING COMPANY: BOWSER MORNER
DRILLING RIG: ROTOSONIC

BORING NUMBER: 13MW720
DATE: 7/1/03
GEOLOGIST: BOB BALKOVEC
DRILLER: DAVES

Sample No. and Type or RQD	Depth (Ft.) or Run No.	Blows / 6" or RQD (%)	Sample Recovery / Sample Length	Lithology Change (Depth /Ft.) or Screened Interval	MATERIAL DESCRIPTION: Soil Density/ Consistency or Rock Hardness	Color	Material Classification	USCS *	Remarks	PID/FID Reading (ppm): Sample	Sampler BZ	Borehole**	Driller BZ**
	1				MOIST SOFT	BR	.5' TOP SOIL	ML		0.0			
	2				MOIST	YELL OR	.5'-6' CLAYEY SILT + SAND	ML					
	3				MOIST FF	LT	(FILL)	ML/SC					
	4					GRAY			MOTTLED (3'-5')				
S.1 0817	5		4.7' / 5'										
	6					YELL OR	CLAYEY SILT	ML		0.0			
	7			11'-11'	HARD	LT	6'-13.5' SILTSTONE	BR	THIN LAMINATION				
	8					DK GRAY							
	9												
S.2 0835	10		4.4' / 5'				SHALEY 9'-10'						
	11						SILTSTONE 10'-13.5'			0.0			
	12												
	13												
	14				WET + SOFT								
S.3 0847	15		4.8' / 5'		HARD +	WHITE	SANDSTONE 13.5'-15.5'	MS	WATER @ Bottom of				
	16				DRY				HOLE 13.2' @ 0909	0.0			
	17				SOFT +	LT DK	15.5'-20' SILTY SHALE	BR					
	18				DRY	GRAY							
	19												
S.4 0924	20		5' / 5'										
				T.D. 20'			WELL SET @ 20' 2" PVC						
							SCREENED 10'-20'						
							SAND TO 8'						
							BENT TO 2'						

* When rock coring, enter rock brokeness.

** Include monitor reading in 6 foot intervals @ borehole. Increase reading frequency if elevated reponse read.

Remarks:

Drilling Area Background (ppm): 0.0

Converted to Well: Yes X No

Well I.D. #: 13MW720

Tetra Tech NUS, Inc.

BEDROCK
MONITORING WELL SHEET

WELL No.: 13MW720

PERMIT No:

PROJECT:	NSWC CRANE	DRILLING Co.:	BOWSER MORNER	BORING No.:	13MW720
PROJECT No.:	9060 CTO 0279	DRILLER:	DAVE S.	DATE COMPLETED:	4/1/03
SITE:	SWMU 13	DRILLING METHOD:	ROTOSONIC	NORTHING:	1304066.757
GEOLOGIST:	B. BALKOVEC	DEV. METHOD:	WATTERRA	EASTING:	3023527.233

Ground Elevation = 689.33
Datum MSL:

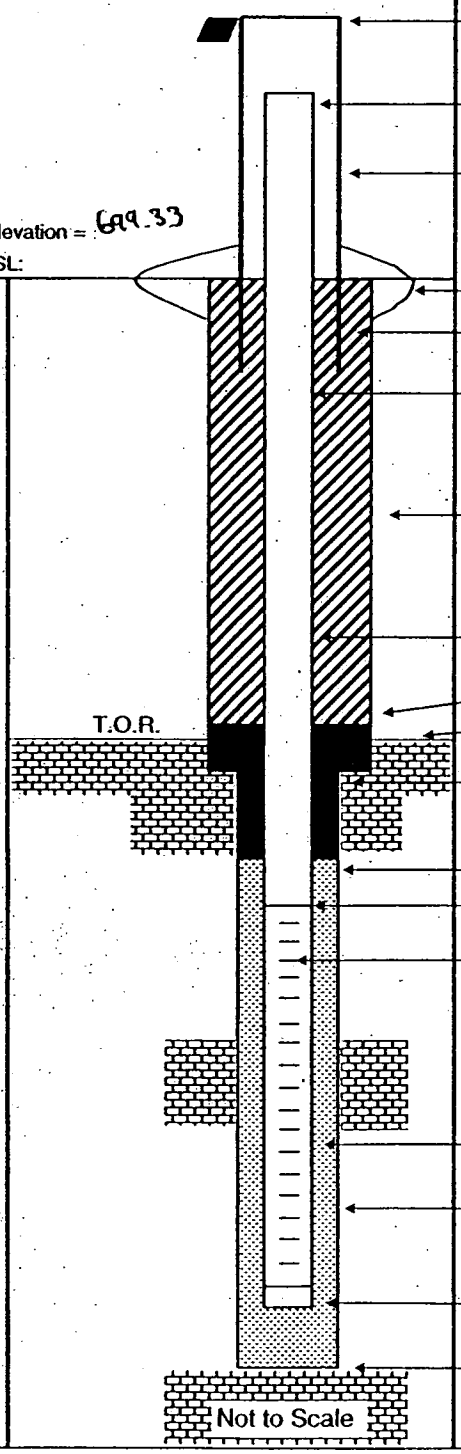

Elevation of Top of Casing: 702.65

Stick Up of Casing Above Ground Surface: 2.74

Elevation of Top of Riser: 702.07

I.D. of Surface Casing: 4" SQUARE

Type of Surface Casing: STEEL

Type of Surface Seal: 4'x4'x6" PAD

I.D. of Permanent Casing: NA

I.D. of Riser: 2"

Type of Riser: PVC

Borehole Diameter: 5"

Type of Backfill: CEMENT

Elevation / Depth Top of Seal: 687.33 / 2'

Elevation / Depth Top of Bedrock: 683.33 / 6'

Type of Seal: BENT. CHIPS

Elevation / Depth of Top of Filter Pack: 681.33 / 8'

Elevation / Depth of Top of Screen: 689.33 / 10'

Type of Screen: PVC

Slot Size x Length: .20 x 10'

I.D. of Screen: 2"

Type of Filter Pack: No. 20-40 SAND

Diameter of Hole in Bedrock:
Core / Ream: 5"

Elevation / Depth of Bottom of Screen: 679.33 / 20'

Elevation / Total Depth of Borehole: 679.33 / 20'

Tetra Tech NUS, Inc.

BORING LOG

PROJECT NAME: NSWC CRANE
PROJECT NUMBER: N9060 CTO 0279
DRILLING COMPANY: BOWSER MORNER
DRILLING RIG: ROTOSONIC

BORING NUMBER: 13MW721
DATE: 3/28/03
GEOLOGIST: BOB BALKOVEC
DRILLER: DAVES

Sample No. and Type or RQD	Depth (Ft.) or Run No.	Blows / 6" or RQD (%)	Sample Recovery / Sample Length	Lithology Change (Depth /Ft.) or Screened Interval	MATERIAL DESCRIPTION: Soil Density/ Consistency or Rock Hardness	Color	Material Classification	USCS *	Remarks	PID/FID Reading (ppm): Sample	Sampler BZ	Borehole**	Driller BZ**
	1					BR	SEE 13MW717 FOR		5" 0-15'				
							COMPLETE LITHOLOGY						
							SILTY MATERIAL						
1051	5												
						GRAY							
1100	10								HARD DRILLING @ 10'				
							SILTY MATERIAL						
1105	15												
				T.D 15'			WELL SET @ 15' 2" PVC						
							SCREENED 5'-15'						
							SAND TO 4'						
							BENT 2'						

* When rock coring, enter rock brokeness.

** Include monitor reading in 6 foot intervals @ borehole. Increase reading frequency if elevated reponse read.

Remarks:

Drilling Area Background (ppm): 00

Converted to Well: Yes X No

Well I.D. #: 13MW721

Tetra Tech NUS, Inc.

BEDROCK
MONITORING WELL SHEET

WELL No.: 13MW721

PERMIT No:

PROJECT:	NSWC CRANE	DRILLING Co.:	BOWSER MORNER	BORING No.:	13MW721
PROJECT No.:	9060 CTO 0279	DRILLER:	DAVES.	DATE COMPLETED:	3/28/03
SITE:	SWMU 13	DRILLING METHOD:	ROTOSONIC	NORTHING:	1309391.009
GEOLOGIST:	B. BALKOVEC	DEV. METHOD:	WATTERRA	EASTING:	3022916.218

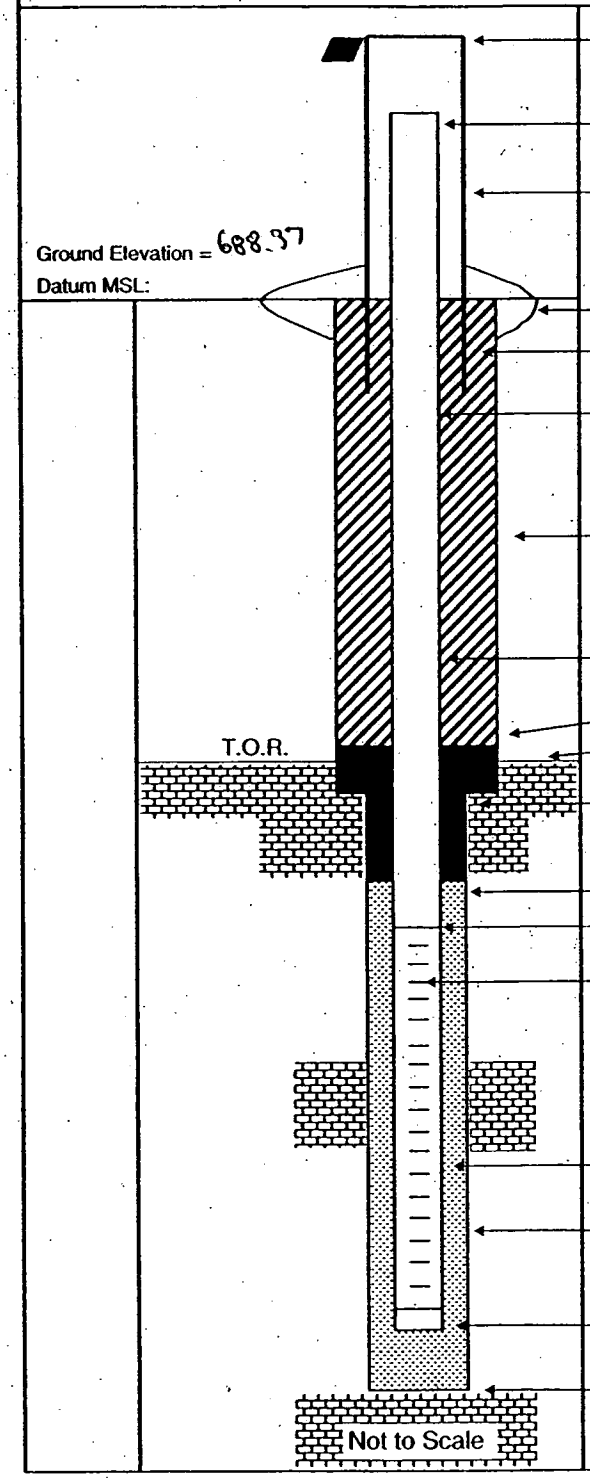

Elevation of Top of Casing: 691.26

Stick Up of Casing Above Ground Surface: 2.37

Elevation of Top of Riser: 690.74

I.D. of Surface Casing: 4" SQUARE

Type of Surface Casing: STEEL

Type of Surface Seal: 4'x4'x6" PAD

I.D. of Permanent Casing: N/A

I.D. of Riser: 2"

Type of Riser: PVC

Borehole Diameter: 5"

Type of Backfill: CEMENT

Elevation / Depth Top of Seal: 686.37 / 2'

Elevation / Depth Top of Bedrock: 678.37 / 10'

Type of Seal: BENT. CHIPS

Elevation / Depth of Top of Filter Pack: 684.37 / 4'

Elevation / Depth of Top of Screen: 683.37 / 5'

Type of Screen: PVC

Slot Size x Length: .20 x 10'

I.D. of Screen: 2"

Type of Filter Pack: No. 20-40 SAND

Diameter of Hole in Bedrock:
Core / Ream: 5"

Elevation / Depth of Bottom of Screen: 673.37 / 15'

Elevation / Total Depth of Borehole: 673.37 / 15'

Tetra Tech NUS, Inc.

BORING LOG

PROJECT NAME: NSWC CRANE
PROJECT NUMBER: N9060 CTO 0279
DRILLING COMPANY: BOWSER MORNER
DRILLING RIG: ROTOSONIC

BORING NUMBER: 13MWT22
DATE: 3/28/03
GEOLOGIST: BOB BALKOVEC
DRILLER: DAVE S.

Sample No. and Type or RQD	Depth (Ft.) or Run No.	Blows / 6" or RQD (%)	Sample Recovery / Sample Length	Lithology Change (Depth /Ft.) or Screened Interval	Soil Density/ Consistency or Rock Hardness	Color	Material Classification	USCS*	Remarks	PID/FID Reading (ppm) Sample	Sampler BZ	Borehole**	Driller BZ**
	1					BR	.5' TOP SOIL	ML		0.0	0.0		
	2					YELL BR	CLAYEY SILT .5-3'						
	3					↓	↓						
	4					YELL BR & GRAY	SANDY SILT 3'-5'		MOTTLED				
SW 0813	5		5' / 5'				↓ SOME WEATHERED RX			↓			0.0
	6					↓	5-6' ↓	ML		0.0			
	7				SOFT &	YELL BR & GRAY	6'-11' SILT STONE	BR	COL TO THE				
	8				DRY		↓		TOUCH. PLS				
	9				HARD &	LT GRAY			WATER @ 7'	↓			
SW 0819	10		4.9' / 5'		DRY	↓	↓			0.0			
	11					↓	SILT STONE			0.0			
	12					LT GRAY	11-15' S.S						
	13					↓							
	14					BR			WATER UP TO 14'				
SW 0829	15		4.9' / 5'		↓	BLK	↓	↓	@ 0848	↓	↓		0.0
				T.D. 15'			SET WELL @ 15' 2" PVC		6" TO 5' REAM				
							SCREENED 5'-15'		5'-15' (5")				
							SAND TO 4'						
							BEAD CHIPS TO 2'						

* When rock coring, enter rock brokeness.

** Include monitor reading in 6 foot intervals @ borehole. Increase reading frequency if elevated reponse read.

Remarks:

Drilling Area Background (ppm): 0.0

Converted to Well: Yes X No

Well I.D. #: 13MWT22

Tetra Tech NUS, Inc.

BEDROCK
MONITORING WELL SHEET

WELL No.: 13MW-122

PERMIT No:

PROJECT:	NSWC CRANE	DRILLING Co.:	BOWSER MORNER	BORING No.:	13MW122
PROJECT No.:	9060 CTO 0279	DRILLER:	DAVE S.	DATE COMPLETED:	3/28/03
SITE:	SWMU 13	DRILLING METHOD:	ROTOSONIC	NORTHING:	1308436.338
GEOLOGIST:	B. BALKOVEC	DEV. METHOD:	WATTERA	EASTING:	3022785.672

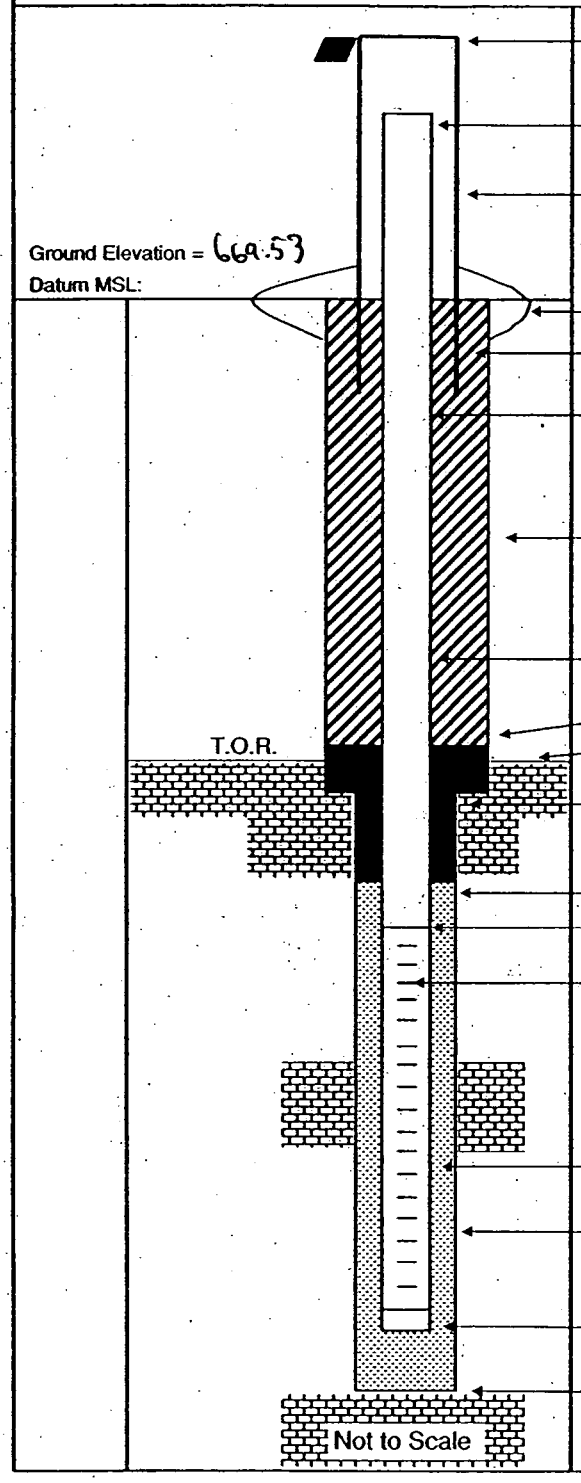

Elevation of Top of Casing: 672.38

Stick Up of Casing Above Ground Surface: 2.43

Elevation of Top of Riser: 671.96

I.D. of Surface Casing: 4" SQUARE

Type of Surface Casing: STEEL

Type of Surface Seal: 4'x4'x6" PAD

I.D. of Permanent Casing: NA

I.D. of Riser: 2"

Type of Riser: PVC

Borehole Diameter: 6" 0-5'
5" 5'-15'

Type of Backfill: CEMENT

Elevation / Depth Top of Seal: 667.53 / 2'

Elevation / Depth Top of Bedrock: 663.53 / 6'

Type of Seal: BENT CHIPS

Elevation / Depth of Top of Filter Pack: 665.53 / 4'

Elevation / Depth of Top of Screen: 664.53 / 5'

Type of Screen: PVC

Slot Size x Length: .20 x 10'

I.D. of Screen: 2"

Type of Filter Pack: No. 20-40 SAND

Diameter of Hole in Bedrock:
Core / Ream: 5"

Elevation / Depth of Bottom of Screen: 654.53 / 15'

Elevation / Total Depth of Borehole: 654.53 / 15'

Tetra Tech NUS, Inc.

BORING LOG

PROJECT NAME: NSWC CRANE
PROJECT NUMBER: N9060 CTO 0279
DRILLING COMPANY: BOWSER MORNER
DRILLING RIG: ROTOSONIC

BORING NUMBER: 13MW723
DATE: 4/1/03
GEOLOGIST: BOB BALKOVEC
DRILLER: DAVE S.

Sample No. and Type or RQD	Depth (Ft.) or Run No.	Blows / 6" or RQD (%)	Sample Recovery / Sample Length	Lithology Change (Depth /Ft.) or Screened Interval	MATERIAL DESCRIPTION: Soil Density/ Consistency or Rock Hardness	Color	Material Classification	USCS*	Remarks	PID/FID Reading (ppm): Sample	Sampler BZ	Borehole**	Driller BZ**
	1				DAMP	BR	TOP .5' TOP SOIL	ML		0.0			
	2				MOIST	BR	.5'-5.5' CLAYEY SILT						
	3				M.STIFF	↓							
	4					LT GRY			MOTTLED (3'-5')				
S-1 1225	5		4.5'/5'			↓							
	6					BR	CLAYEY SILT	ML		0.0			
	7				MOIST M.STIFF	YELL	5.5'-10.8' SANDY SILT						
	8					BR							
	9					LT GRY							
S-2 1233	10		5'/5'			↓			WET SAND SEAM @ 10'				
	11				DAMP M.STIFF	↓	SANDY SILT	ML	ROCK @ 10.8'	0.0			
	12					DK GRY	SILTSTONE 10.8'-13.2'	RX	THIN LAM				
	13												
	14					LT GRY	13.2'-22' SILTSTONE W/SS						
S-3 1242	15		4.9'/5'			LT GRY	SEAMS 2 1" THICK						
	16			▼?		↓	SILTSTONE W/SS						
	17			STATIC		BR	SANDSTONE		POSS WATER @ 16'				
	18					LT. GRY							
	19												
S-4 1252	20		4.5'/5'										
	21				WET -								
S-5 1312	22		1.5'/2'										
				TD. 22'			WELL SET @ 21.5' 2" PVC		5' OF SAND FILL				
							SCREENED 11.5'-21.5'		BACK 2W.				
							SAND TO 9.5' BENT TO 2'						

* When rock coring, enter rock brokeness.

** Include monitor reading in 6 foot intervals @ borehole. Increase reading frequency if elevated reponse read.

Remarks: 5" TO 22'

Drilling Area Background (ppm): 0.0

Converted to Well: Yes X No ____ Well I.D. #: 13MW723

Tetra Tech NUS, Inc.

BEDROCK
MONITORING WELL SHEET

WELL No.: BMWT23

PERMIT No:

PROJECT:	NSWC CRANE	DRILLING Co.:	BOWSER MORNER	BORING No.:	BMWT23
PROJECT No.:	9060 CTO 0279	DRILLER:	DAVES.	DATE COMPLETED:	4/1/03
SITE:	SWMU 13	DRILLING METHOD:	ROTOSONIC	NORTHING:	1308708.016
GEOLOGIST:	B. BALKOVEC	DEV. METHOD:	WATTERA	EASTING:	3023245.117

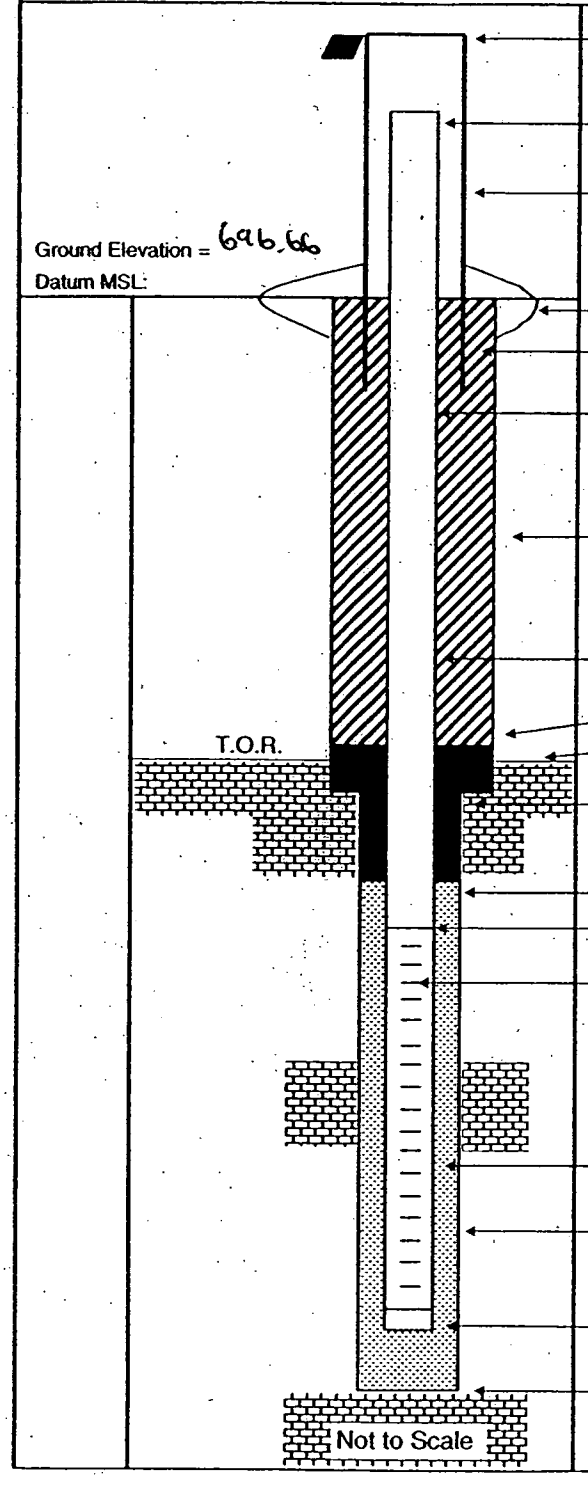

Elevation of Top of Casing: 699.69

Stick Up of Casing Above Ground Surface: 2.48

Elevation of Top of Riser: 699.14

I.D. of Surface Casing: 4" SQUARE

Type of Surface Casing: STEEL

Type of Surface Seal: 4'x4'x6" PAD

I.D. of Permanent Casing: NA

I.D. of Riser: 2"

Type of Riser: PVC

Borehole Diameter: 5"

Type of Backfill: VOL CLAY (2-7.5')

Elevation / Depth Top of Seal: 689.16 / 7.5'

Elevation / Depth Top of Bedrock: 685.86 / 10.5'

Type of Seal: BENT. CHIPS

Elevation / Depth of Top of Filter Pack: 687.16 / 9.5'

Elevation / Depth of Top of Screen: 685.16 / 11.5'

Type of Screen: PVC

Slot Size x Length: .20 x 10'

I.D. of Screen: 2"

Type of Filter Pack: No. 20-40 SAND

Diameter of Hole in Bedrock:
Core / Ream: 5"

Elevation / Depth of Bottom of Screen: 675.16 / 21.5'

Elevation / Total Depth of Borehole: 674.66 / 22.0'

Tetra Tech NUS, Inc.

BORING LOG

PROJECT NAME: NSWC CRANE
PROJECT NUMBER: N9060 CTO 0279
DRILLING COMPANY: BOWSER MORNER
DRILLING RIG: ROTOSONIC

BORING NUMBER: 13MW724
DATE: 4/1/03
GEOLOGIST: BOB BALKOVEC
DRILLER: DAVE S.

Sample No. and Type or RQD	Depth (Ft.) or Run No.	Blows / 6" or RQD (%)	Sample Recovery / Sample Length	Lithology Change (Depth /Ft.) or Screened Interval	Soil Density/ Consistency or Rock Hardness	Color	Material Classification	USCS*	Remarks	PID/FID Reading (ppm) Sample	Sampler BZ	Borehole**	Driller BZ**
	1					YELL BR	SEE BORING LOG 13MW721 + 13MW723 FOR COMPLETE LITHOLOGIC DETAILS	ML	LOGGED SOIL CUTTINGS				
							5" REAM 0-22'						
	5						-SILTY CUTTINGS						
						YELL BR							
	10												
						GRAY	SILTY MATERIAL	ML	ROCK @10'				
							SILTSTONE?		HARDER TO REAM: SLOWER PROGRESS				
	15												
	20												
						GRAY			FLUSHED OUT				
	22								HOLE WATER				
				TD 22'			WELL SET @ 22' 2" PVC		@19.0'				
							SCREENED 12'-22'						
							SAND TO 10' BENT TO 8' VOL CLAY TO 2'						

* When rock coring, enter rock brokeness.
** Include monitor reading in 6 foot intervals @ borehole. Increase reading frequency if elevated reponse read.

Drilling Area Background (ppm): –

Remarks: 5" REAM 0-22'

Converted to Well: Yes X No ___ Well I.D. #: 13MW724

Tetra Tech NUS, Inc.

BEDROCK
MONITORING WELL SHEET

WELL No.: 13MW724

PERMIT No:

PROJECT:	NSWC CRANE	DRILLING Co.:	BOWSER MORNER	BORING No.:	13MW724
PROJECT No.:	9060 CTO 0279	DRILLER:	DAVES.	DATE COMPLETED:	4/1/03
SITE:	SWMU 13	DRILLING METHOD:	ROTOSONIC	NORTHING:	1308397.230
GEOLOGIST:	B. BALKOVEC	DEV. METHOD:	WATTERA	EASTING:	302296.484

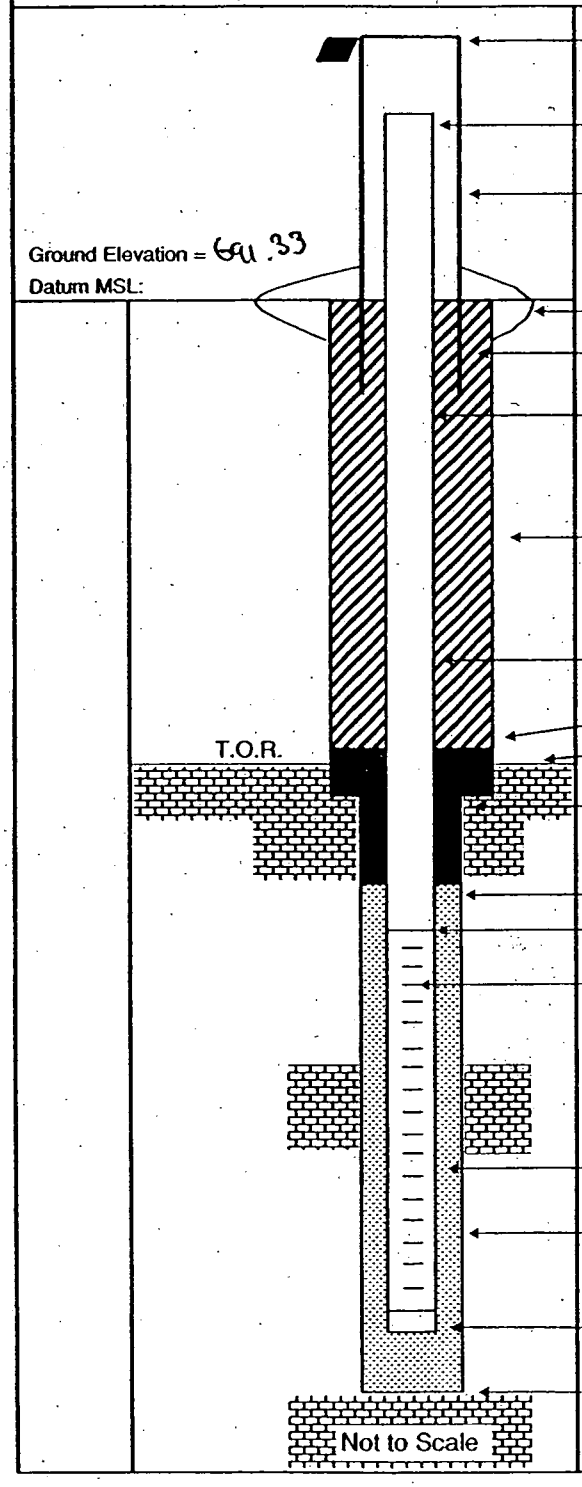

Elevation of Top of Casing: 694.39

Stick Up of Casing Above Ground Surface: 2.6

Elevation of Top of Riser: 693.93

I.D. of Surface Casing: 4" SQUARE

Type of Surface Casing: STEEL

Type of Surface Seal: 4'x4'x6" PAD

I.D. of Permanent Casing: NA

I.D. of Riser: 2"

Type of Riser: PVC

Borehole Diameter: 5"

Type of Backfill: VOL CLAY (2'-8')

Elevation / Depth Top of Seal: 683.33 / 8'

Elevation / Depth Top of Bedrock: 680.33 / 11'

Type of Seal: BENT. CHIPS

Elevation / Depth of Top of Filter Pack: 681.33 / 10'

Elevation / Depth of Top of Screen: 679.33 / 12'

Type of Screen: PVC

Slot Size x Length: .20 x 10'

I.D. of Screen: 2"

Type of Filter Pack: No. 20-40 SAND

Diameter of Hole in Bedrock: Core / Ream: 5"

Elevation / Depth of Bottom of Screen: 669.33 / 22'

Elevation / Total Depth of Borehole: 669.33 / 22'

Tetra Tech NUS, Inc.

BORING LOG

PROJECT NAME: NSWC CRANE
PROJECT NUMBER: N9060 CTO 0279
DRILLING COMPANY: BOWSER MORNER
DRILLING RIG: ROTOSONIC

BORING NUMBER: BMWT25
DATE: 3/28/03
GEOLOGIST: BOB BALKOVEC
DRILLER: DAVE S.

Sample No. and Type or RQD	Depth (Ft.) or Run No.	Blows / 6" or RQD (%)	Sample Recovery / Sample Length	Lithology Change (Depth /Ft.) or Screened Interval	MATERIAL DESCRIPTION: Soil Density/ Consistency or Rock Hardness	Color	Material Classification	USCS*	Remarks	PID/FID Reading (ppm): Sample	Sampler BZ	Borehole**	Driller BZ**
	1					BR	TOP 5' TOP SOIL	ML		0.0			
	2					LT	5'-4' SILTY CLAY W/	CL					
	3					BR	F-C SAND						
	4												
S-1 B302	5		4.5' / 5'			YELLOW BROWN	SANDY SILT W/ T-CLAY	ML	MOTTLED				
	6				MOIST -		CLAYEY SILT			0.0			
	7				STIFF		4'-8'						
	8				SOFT + WET				WET @ 8'				
	9				STIFF - DRY	YELLOW	SAND & SILT 8'-9'	ML	WEATHERED RK				
S-2 B310	10		4.5' / 5'		DRY - SOFT	LT GRAY	SILTSTONE 9'-15'	RK	BLACK CLAY LAYER @ 9' x 2" WIDE				
	11									0.0			
	12												
	13												
S-3 B323	14		4 / 4'						REFUSAL @ 14'				
	15						5" REAM TO 15'		RUN 5" TO 15'				
				T.D. 15'									
							SET WELL @ 15' 2" PVC						
							SCREENED FROM 5'-15'						
							SAND TO 4'						
							BENT CHIPS TO 2'						

* When rock coring, enter rock brokeness.

** Include monitor reading in 6 foot intervals @ borehole. Increase reading frequency if elevated reponse read.

Remarks: SAMPLED 0-14' 1' OF REAM.

Drilling Area Background (ppm): 0.0

Converted to Well: Yes X No ____ Well I.D. #: BMWT25

Tetra Tech NUS, Inc.

BEDROCK MONITORING WELL SHEET

WELL No.: BMW725

PERMIT No:

PROJECT:	NSWC CRANE	DRILLING Co.:	BOWSER MORNER	BORING No.:	BMW725
PROJECT No.:	9060 CTO 0279	DRILLER:	DAVE S.	DATE COMPLETED:	7/28/03
SITE:	SWMU 13	DRILLING METHOD:	ROTOSONIC	NORTHING:	1308625.618
GEOLOGIST:	B. BALKOVEC	DEV. METHOD:	WATTERA	EASTING:	3072677.444

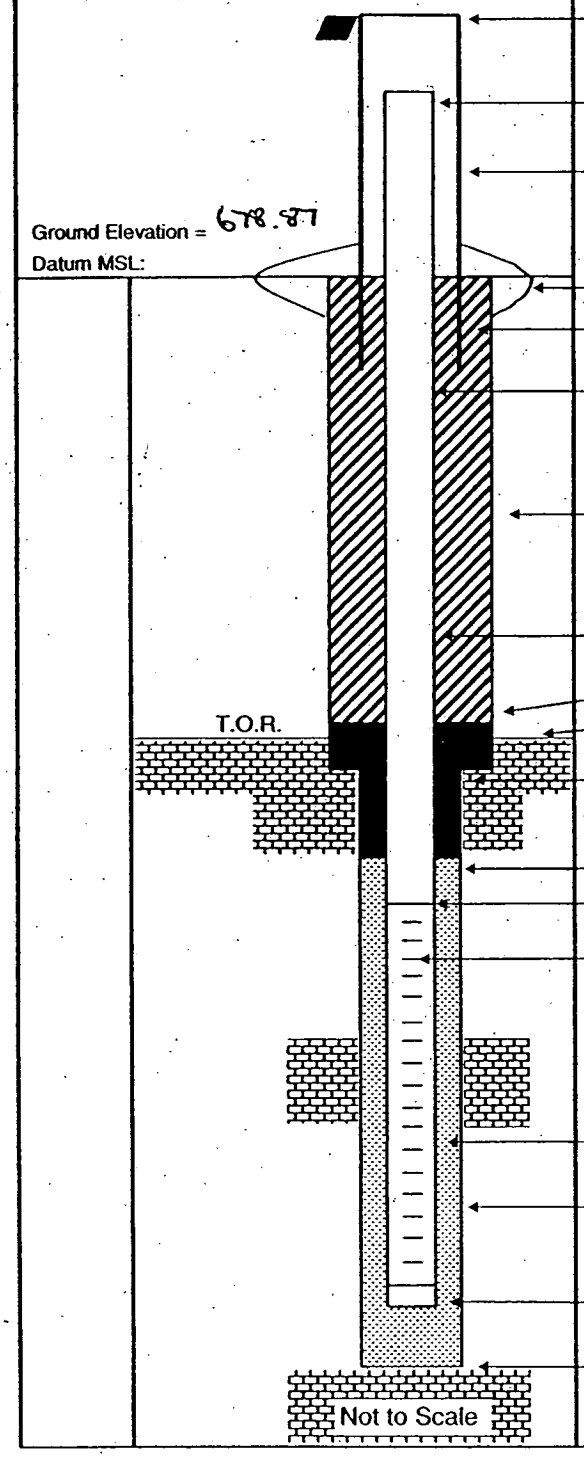

Elevation of Top of Casing: 682.00

Stick Up of Casing Above Ground Surface: 2.70

Elevation of Top of Riser: 681.57

I.D. of Surface Casing: 4" SQUARE

Type of Surface Casing: STEEL

Type of Surface Seal: 4'x4'x6" PAD

I.D. of Permanent Casing: NA

I.D. of Riser: 2"

Type of Riser: PVC

Borehole Diameter: 5"

Type of Backfill: CEMENT

Elevation / Depth Top of Seal: 676.87 / 2'

Elevation / Depth Top of Bedrock: 669.87 / 9'

Type of Seal: BENT. CHIPS

Elevation / Depth of Top of Filter Pack: 674.87 / 4'

Elevation / Depth of Top of Screen: 673.87 / 5'

Type of Screen: PVC

Slot Size x Length: .20 x 10'

I.D. of Screen: 2"

Type of Filter Pack: No. 20-40 SAND

Diameter of Hole in Bedrock:
Core / Ream: 5"

Elevation / Depth of Bottom of Screen: 663.87 / 15'

Elevation / Total Depth of Borehole: 663.87 / 15'

Tetra Tech NUS, Inc.

BORING LOG

PROJECT NAME: NSWC CRANE
PROJECT NUMBER: N9060 CTO 0279
DRILLING COMPANY: BOWSER MORNER
DRILLING RIG: ROTOSONIC

BORING NUMBER: 13MWT26
DATE: 3/28/03
GEOLOGIST: BOB BALKOVEC
DRILLER: DAVE S.

Sample No. and Type or RQD	Depth (Ft.) or Run No.	Blows / 6" or RQD (%)	Sample Recovery / Sample Length	Lithology Change (Depth /Ft.) or Screened Interval	MATERIAL DESCRIPTION: Soil Density/ Consistency or Rock Hardness	Color	Material Classification	USCS*	Remarks	PID/FID Reading (ppm): Sample	Sampler BZ	Borehole**	Driller BZ**
	1				MOIST	BR	TOP .5 TOP SOIL	ML		0.0	0.0		
	2				M STIFF		.5-6.5' SANDY SILT						
	3												
	4												
S1 1452	5		4.7 / 5'									0.0	0.0
	6					BR	SANDY SILT			0.0			
	7					YELL OR &	6.5-8.5' SANDY SILT W/ SOME						
	8					GRAY	CLAY & S.S. FRAGS		SOME MOISTURE				
	9								@ 8' NOT				
S-2 1456	10		5 / 5'				MORE S.S. @ 10'		MUCH				
	11			?			CASING PLUGGED UP						
	12						SANDY SILT W/ SOME						
	13		@				CLAY & SS FRAGS						
	14			?		LT GRAY	13.5-17' SANDSTONE		S.S @ 13.5'				
S3 1514	15		2 / 5'						DRILLER OBSERV.				
	16				HARD	BR		MS	SET 6" TO 10'				
	17		@1543										
C4	18		40%		SOFT +	LT. DK	ALTERNATING BEDS OF	VBR	CLAYEY 17-19'				
	19		RQD		HARD.	GRAY	SANDSTONE & SHALESTONE						
	20		5 / 5'		SOFT	LT GRAY	1' SANDSTONE BRITTLE						
				T.D. 20'			WELL SET @ 20' 2" PVC						
							SCREENED 10'-20'						
							SAND TO 8'						
							BENT CHIPS TO 3'						
							NO VOC CLAY.						

* When rock coring, enter rock brokeness.

** Include monitor reading in 6 foot intervals @ borehole. Increase reading frequency if elevated reponse read.

Remarks: DRY @ 15' AFTER REAMING. WC @ 19' AFTER BLOW OUT

Drilling Area Background (ppm): 0.0

Converted to Well: Yes X No ____ Well I.D. #: 13MWT26

Tetra Tech NUS, Inc.

BEDROCK MONITORING WELL SHEET

WELL No.: 13MW726

PERMIT No:

PROJECT:	NSWC CRANE	DRILLING Co.:	BOWSER MORNER	BORING No.:	13MW726
PROJECT No.:	9060 CTO 0279	DRILLER:	DAVE S.	DATE COMPLETED:	3/28/03
SITE:	SWMU 13	DRILLING METHOD:	ROTOSONIC	NORTHING:	1308232.686
GEOLOGIST:	B. BALKOVEC	DEV. METHOD:	WHALE	EASTING:	3022690.142

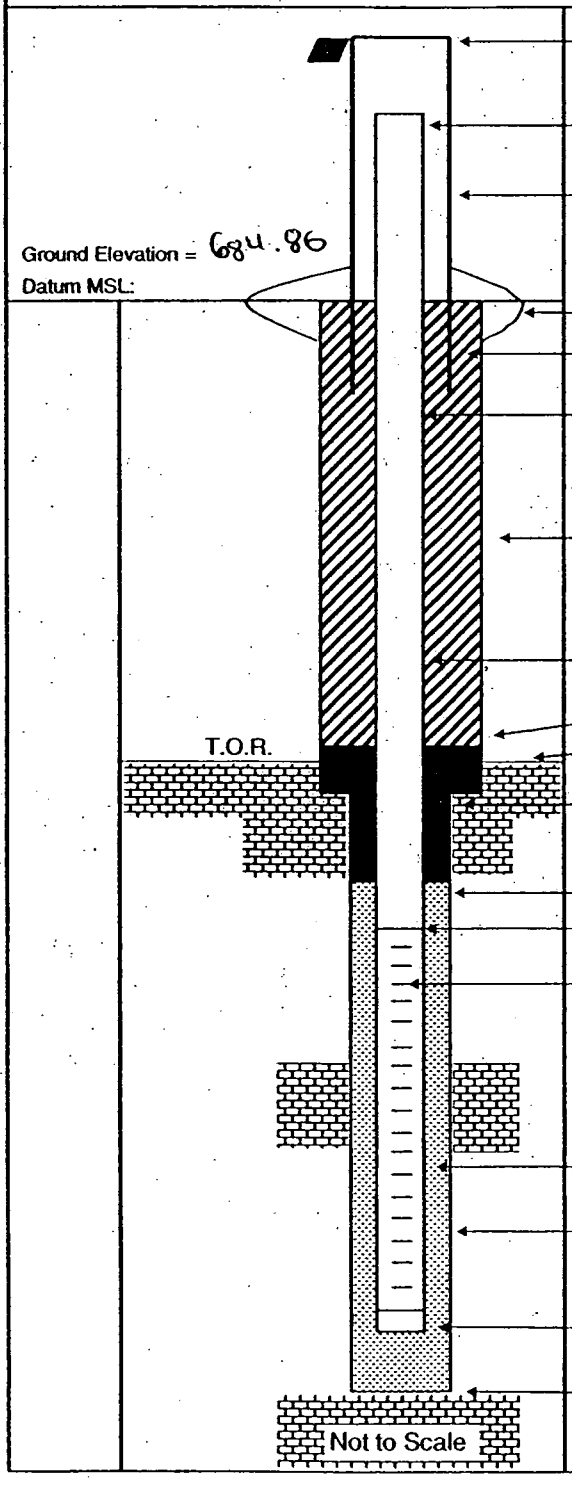

Elevation of Top of Casing: 687.42

Stick Up of Casing Above Ground Surface: 2.63'

Elevation of Top of Riser: 687.49

I.D. of Surface Casing: 4" SQUARE

Type of Surface Casing: STEEL

Type of Surface Seal: 4'x4'x6" PAD

I.D. of Permanent Casing: NA

I.D. of Riser: 2"

Type of Riser: PVC

Borehole Diameter: 6" 0-10' / 5" 10-20'

Type of Backfill: CEMENT

Elevation / Depth Top of Seal: 681.86 / 3'

Elevation / Depth Top of Bedrock: 672.36 / 12.5

Type of Seal: BENT. CHIPS

Elevation / Depth of Top of Filter Pack: 676.86 / 8'

Elevation / Depth of Top of Screen: 674.86 / 10'

Type of Screen: PVC

Slot Size x Length: .20 x 10'

I.D. of Screen: 2"

Type of Filter Pack: No. 20-40 SAND

Diameter of Hole in Bedrock: Core / Ream: 5"

Elevation / Depth of Bottom of Screen: 664.86 / 20'

Elevation / Total Depth of Borehole: 664.86 / 20'

Tetra Tech NUS, Inc.

BORING LOG

PROJECT NAME: NSWC CRANE
PROJECT NUMBER: N9060 CTO 0279
DRILLING COMPANY: BOWSER MORNER
DRILLING RIG: GEOPROBE 54 LT

BORING NUMBER: 13SB01
DATE: 3-25-03
GEOLOGIST: M. G. COCHRAN
DRILLER: J. AKERS

Sample No. and Type or RQD	Depth (FL) or Run No.	Blows / 6" or RQD (%)	Sample Recovery / Sample Length	Lithology Change (Depth /FL) or Screened Interval	MATERIAL DESCRIPTION: Soil Density/ Consistency or Rock Hardness	Color	Material Classification	USCS *	Remarks	PID/FID Reading (ppm): Sample	Sampler BZ.	Borehole**	Driller BZ.**
0	1		2.3/		—	GR-BRN	SANDY SILT	SM	MOIST	3.6	3.6	3.6	3.6
	2		4.0						FE STAINED	↓	↓	↓	↓
	3								FILL				
4	4								MORE FE				
	5						TD 4.0'		BTM. BTM DAMP				
	6												
	7												
	8												
	9												
	10												
	11												
	12												
	13												
	14												
	15												
						SAMPLED 13SS010002 @ 1240							
						SAMPLED 13SB010204 @ 1245							

* When rock coring, enter rock brokeness.

** Include monitor reading in 6 foot intervals @ borehole. Increase reading frequency if elevated reponse read.

Remarks: DPT W/ MACRO CORE

Drilling Area Background (ppm): 3.6

Converted to Well: Yes ____ No ✓ Well I.D. #: —

Tetra Tech NUS, Inc.

BORING LOG

PROJECT NAME: NSWC CRANE
PROJECT NUMBER: N9060 CTO 0279
DRILLING COMPANY: BOWSER MORNER
DRILLING RIG: GEOPROBE 54 LT
BORING NUMBER: 13SB02
DATE: 3-25-03
GEOLOGIST: M. G. COCHRAN
DRILLER: J. AKERS

Sample No. and Type or RQD	Depth (FL) or Run No.	Blows / 6" or RQD (%)	Sample Recovery / Sample Length	Lithology Change (Depth /FL) or Screened Interval	MATERIAL DESCRIPTION: Soil Density/ Consistency or Rock Hardness	Color	Material Classification	USCS*	Remarks	PID/FID Reading (ppm): Sample	Sampler BZ	Borehole**	Driller BZ**
O	1		2.5/		—	GR BRN	SANDY SILT	SM	MOIST	2.1	2.1	2.1	2.1
	2		4.0						FE STAINED	↓	↓	↓	↓
	3								FILL				
4	4								DAMP @ BTM				
	5						TD 4.0						
	6												
	7												
	8												
	9												
	10												
	11												
	12												
	13												
	14												
	15												
						SAMPLED	13SS020002						
						@	1255						
						SAMPLED	13SB020204						
						@	1300						

* When rock coring, enter rock brokeness.

** Include monitor reading in 6 foot intervals @ borehole. Increase reading frequency if elevated reponse read.

Remarks: DPT W/ MACRO CORE

Drilling Area Background (ppm): 2.1

Converted to Well: Yes ____ No ✓ Well I.D. #: ____

Tetra Tech NUS, Inc.

BORING LOG

PROJECT NAME: NSWC CRANE
PROJECT NUMBER: N9060 CTO 0279
DRILLING COMPANY: BOWSER MORNER
DRILLING RIG: GEOPROBE 54 LT

BORING NUMBER: 13SB03
DATE: 3-25-03
GEOLOGIST: M. G. COCHRAN
DRILLER: J. AKERS

Sample No. and Type or RQD	Depth (Ft.) or Run No.	Blows / 6" or RQD (%)	Sample Recovery / Sample Length	Lithology Change (Depth /Ft.) or Screened Interval	MATERIAL DESCRIPTION: Soil Density/ Consistency or Rock Hardness	Color	Material Classification	USCS*	Remarks	PID/FID Reading (ppm): Sample	Sampler BZ	Borehole**	Driller BZ**
	1		2.8/			GR BRN	SANDY SILT	SM	moist @ TOP	1.8	1.8	1.8	1.8
	2		4.0						FILL	↓	↓	↓	↓
	3								DAMP @ BTM				
	4								Fe STAINED @				
	5						TD 4.0		HARD @ BTM BTM				
	6												
	7												
	8												
	9												
	10												
	11												
	12												
	13												
	14												
	15												
						SAMPLED	13SS030002						
						@	1310						
						SAMPLED	13SB030204						
						@	1315						

* When rock coring, enter rock brokeness.

** Include monitor reading in 6 foot intervals @ borehole. Increase reading frequency if elevated reponse read.

Remarks: DPT W/ MACRO CORE

Drilling Area Background (ppm): 1.8

Converted to Well: Yes ____ No ✓ Well I.D. #: —

Tetra Tech NUS, Inc.

BORING LOG

PROJECT NAME: NSWC CRANE
PROJECT NUMBER: N9060 CTO 0279
DRILLING COMPANY: BOWSER MORNER
DRILLING RIG: GEOPROBE 54LT

BORING NUMBER: 13SB04
DATE: 3-25-03
GEOLOGIST: M.G. COCHRAN
DRILLER: J. AKERS

Sample No. and Type or RQD	Depth (Ft.) or Run No.	Blows / 6" or RQD (%)	Sample Recovery / Sample Length	Lithology Change (Depth /Ft.) or Screened Interval	MATERIAL DESCRIPTION: Soil Density/ Consistency or Rock Hardness	Color	Material Classification	USCS*	Remarks	PID/FID Reading (ppm): Sample	Sampler BZ	Borehole**	Driller BZ**
	1		1.81			GR BRN	SANDY SILT	SM	MOIST@TOP	22	22	22	22
	2		4.0							↓	↓	↓	↓
	3								FILL				
	4								FE STAINED @ BTM				
	5						TD 4.0		DAMP@BTM				
	6												
	7												
	8												
	9												
	10												
	11												
	12												
	13												
	14												
	15												
						SAMPLED 13SB040002 @ 1415							
						SAMPLED 13SB040204 @ 1420							

* When rock coring, enter rock brokeness.

** Include monitor reading in 6 foot intervals @ borehole. Increase reading frequency if elevated reponse read.

Remarks: DPT W/ MACRO CORE

Drilling Area Background (ppm): 2.2

Converted to Well: Yes ____ No ✓ Well I.D. #: —

Tetra Tech NUS, Inc.

BORING LOG

PROJECT NAME: NSWC CRANE
PROJECT NUMBER: N9060 CTO 0279
DRILLING COMPANY: BOWSER MORNER
DRILLING RIG: GEOPROBE 54 LT

BORING NUMBER: 13 SB05
DATE: 3-25-03
GEOLOGIST: M. G. COCHRAN
DRILLER: J. ACKERS

Sample No. and Type or RQD	Depth (Ft.) or Run No.	Blows / 6" or RQD (%)	Sample Recovery / Sample Length	Lithology Change (Depth /Ft.) or Screened Interval	MATERIAL DESCRIPTION: Soil Density/ Consistency or Rock Hardness*	Color	Material Classification	USCS*	Remarks	PID/FID Reading (ppm): Sample	Sampler BZ	Borehole**	Driller BZ**
	1		1.2/			GR BRN	SANDY SILT	SM	SAT @ TOP	1.8	1.8	1.8	1.8
	2		4.0							↓	↓	↓	↓
	3								FILL				
	4								DAMP @ BTM FE STAINED				
	5						TD 4.0						
	6												
	7												
	8												
	9												
	10												
	11												
	12												
	13												
	14												
	15												
						SAMPLED	13SS050002						
						@	1350						
						SAMPLED	13SB050204						
						@	1355						

* When rock coring, enter rock brokeness.

** Include monitor reading in 6 foot intervals @ borehole. Increase reading frequency if elevated reponse read.

Remarks: DPT W/ MACRO CORE

Drilling Area Background (ppm): 1.8

Converted to Well: Yes ____ No ✓ Well I.D. #: —

Tetra Tech NUS, Inc.

BORING LOG

PROJECT NAME: NSWC CRANE
PROJECT NUMBER: N9060 CTO 0279
DRILLING COMPANY: BOWSER MORNER
DRILLING RIG: GEOPROBE 54 LT

BORING NUMBER: 13SB06
DATE: 3-25-03
GEOLOGIST: M. G. COCHRAN
DRILLER: J. AKER

Sample No. and Type or RQD	Depth (Ft.) or Run No.	Blows / 6" or RQD (%)	Sample Recovery / Sample Length	Lithology Change (Depth /Ft.) or Screened Interval	MATERIAL DESCRIPTION: Soil Density/ Consistency or Rock Hardness	Color	Material Classification	USCS *	Remarks	PID/FID Reading (ppm): Sample	Sampler BZ	Borehole**	Driller BZ**
0	1		2.5/			GR. BRN	SILTY SAND	SM	MOIST @ TOP	1.9	1.9	1.9	1.9
	2		4.0						FILL				
	3												
4	4								DAMP @ BTM FE STAINED				
	5						TD 4.0						
	6												
	7												
	8												
	9												
	10												
	11												
	12												
	13												
	14												
	15												
						SAMPLED 13SS060002 @ 1330							
						SAMPLED 13SB060204 @ 1335							

* When rock coring, enter rock brokeness.

** Include monitor reading in 6 foot intervals @ borehole. Increase reading frequency if elevated reponse read.

Remarks: DPT W/ MACRO CORE

Drilling Area Background (ppm): 1.9

Converted to Well: Yes ____ No ✓ Well I.D. #: —

Tetra Tech NUS, Inc.

BORING LOG

PROJECT NAME: NSWC CRANE
PROJECT NUMBER: N9060 CTO 0279
DRILLING COMPANY: BOWSER MORNER
DRILLING RIG: GEOPROBE 54LT

BORING NUMBER: 13SB07
DATE: 3-26-03
GEOLOGIST: M G COCHRAN
DRILLER: J. AKERS

Sample No. and Type or RQD	Depth (FL) or Run No.	Blows / 6" or RQD (%)	Sample Recovery / Sample Length	Lithology Change (Depth /FL) or Screened Interval	MATERIAL DESCRIPTION: Soil Density/ Consistency or Rock Hardness	Color	Material Classification	USCS*	Remarks	PID/FID Reading (ppm): Sample	Sampler BZ	Borehole**	Driller BZ**
0	1		3.8/			DK BRN	TOPSOIL - .5' SILT, LITTLE	SM	DAMP	1.7	1.7	1.7	1.7
	2		4.0				SAND		FILL - 5.5'?	↓	↓	↓	↓
	3												
4	4												
	5		3.3/						SATURATED				
	6		4.0						S.S. FRAG				
	7			5.5		RD BRN	SILT, [illegible]		GREY MOTTLING	1.7	1.7	1.7	1.7
8	8								DAMP				
	9												
	10								WEATHERED RK				
11	11						REFUSAL @ 11'		SHALY @ BTM				
	12												
	13												
	14												
	15												
						SAMPLED 13SS070002							
						@ 1320							
						SAMPLED 13SB070810							
						@ 1330							

* When rock coring, enter rock brokeness.

** Include monitor reading in 6 foot intervals @ borehole. Increase reading frequency if elevated reponse read.

Remarks: GEOPROBE MACROCORE
HOLE BACKFILLED W/ HOLEPLUG

Drilling Area Background (ppm): 1.7

Converted to Well: Yes ____ No ✓ Well I.D. #: ____

Tetra Tech NUS, Inc.

BORING LOG

PROJECT NAME: NSWC CRANE
PROJECT NUMBER: N9060 CTO 0279
DRILLING COMPANY: BOWSER MORNER
DRILLING RIG: ROTOSONIC

BORING NUMBER: 13MWT08 / SB08
DATE: 3/30/03
GEOLOGIST: BOB BALKOVEC
DRILLER: DAVE S.

Sample No. and Type or RQD	Depth (Ft.) or Run No.	Blows / 6" or RQD (%)	Sample Recovery / Sample Length	Lithology Change (Depth /Ft.) or Screened Interval	MATERIAL DESCRIPTION: Soil Density/ Consistency or Rock Hardness	Color	Material Classification	USCS*	Remarks	PID/FID Reading (ppm): Sample	Sampler BZ	Borehole**	Driller BZ**
	1				MOIST + SOFT	BR	TOP .5' TOP SOIL	ML		0.0			
	2				DRY +	YELL OR	CLAYEY SILT		03-2 @ 0745				
	3				MOIST	GRAY	(MOTTLED)		DUP F0030304				
	4												
3-1 0743	5		4.5' / 5'										
	6					BR	5-6.5' CLAYEY SILT W/ S.S. PEBBLES	ML		0.0			
	7					YELL OR	6.5-8' CLAYEY SILT		6.5' @ 0800				
	8			?			(MOTTLED)		MOIST				
	9				SOFT +	GRAY	SILTSTONE	DK	POSS. WATER @ 8'				
3-2 1754	10		4.9' / 5'		DRY			BR					
	11				HARD	YELL OR	SANDSTONE 10-10.5'			0.0			
	12				HARD +	GRAY	10.5'-13.5' SILTSTONE						
	13				DRY	YELL OR	(MOTTLED)		MOISTURE ALONG				
	14				HARD +	G/DK	THIN LAMINATED SILTSTONE		STOL WALLS				
3-3 0810	15		5' / 5'		DRY	GRAY	13.5'-15'		6" TO 5' 5" REAM				
				TD 15'			WELL SET @ 15'		5'-15'				
							SCREENED 5'-15'		DRILLER CASING				
							SAND TO 4'		WATER				
							BENT TO 2'		WELL 9 1/2 BGS				
									AFTER BLOWOUT				

* When rock coring, enter rock brokeness.

** Include monitor reading in 6 foot intervals @ borehole. Increase reading frequency if elevated reponse read.

Drilling Area Background (ppm): 0.0

Remarks:

Converted to Well: Yes X No ____ Well I.D. #: 13MWT08

Tetra Tech NUS, Inc.

BORING LOG

PROJECT NAME: NSWC CRANE
PROJECT NUMBER: N9060 CTO 0279
DRILLING COMPANY: BOWSER MORNER
DRILLING RIG: GEOPROBE 54 LT

BORING NUMBER: 13SB09/15
DATE: 3-26-03
GEOLOGIST: M.G COCHRAN
DRILLER: J AKERS

Sample No. and Type or RQD	Depth (Ft.) or Run No.	Blows / 6" or RQD (%)	Sample Recovery / Sample Length	Lithology Change (Depth /Ft.) or Screened Interval	MATERIAL DESCRIPTION: Soil Density/ Consistency or Rock Hardness	Color	Material Classification	USCS *	Remarks	PID/FID Reading (ppm): Sample	Sampler BZ	Borehole**	Driller BZ**
0	1		1.7/			BL	COMPOST		MANURE ODOR, MOIST	2.1	2.1	2.1	2.1
	2		4.0			BRN	SILTY SAND		FILL				
	3												
4	4								DAMP @ BTM				
	5						TD 4.0						
	6												
	7												
	8												
	9												
	10												
	11												
	12												
	13												
	14												
	15												
						SAMPLED	13SS090002 @ 945						
						SAMPLED	13SB090204 @ 950						

* When rock coring, enter rock brokeness.

** Include monitor reading in 6 foot intervals @ borehole. Increase reading frequency if elevated reponse read.

Remarks: GEO PROBE MACRO CORE BACKFILLED W HOLE PLUG

Drilling Area Background (ppm): 2.1

Converted to Well: Yes ____ No ✓ Well I.D. #: ____

Tetra Tech NUS, Inc.

BORING LOG

PROJECT NAME: NSWC CRANE
PROJECT NUMBER: N9060 CTO 0279
DRILLING COMPANY: BOWSER MORNER
DRILLING RIG: GEOPROBE 54LT

BORING NUMBER: 13SB10
DATE: 3-26-03
GEOLOGIST: M. G. COCHRAN
DRILLER: J. AKERS

Sample No. and Type or RQD	Depth (Ft.) or Run No.	Blows / 6" or RQD (%)	Sample Recovery / Sample Length	Lithology Change (Depth /Ft.) or Screened Interval	MATERIAL DESCRIPTION: Soil Density/ Consistency or Rock Hardness	Color	Material Classification	USCS *	Remarks	PID/FID Reading (ppm): Sample	Sampler BZ	Borehole	Driller BZ**
	1					BL BRN	TOPSOIL .5' SANDY SILT	SM	MD MOIST	1.9	1.9	1.9	1.9
	2								FILL				
	3												
	4								DAMP @ BTM				
	5						TB 4.0						
	6												
	7												
	8												
	9												
	10												
	11												
	12												
	13												
	14												
	15												
						SAMPLED	135S100002						
						@	930						
						SAMPLED	13SB100204						
						@	935						

* When rock coring, enter rock brokeness.

** Include monitor reading in 6 foot intervals @ borehole. Increase reading frequency if elevated reponse read.

Remarks: GEOPROBE MACRO CORE

Drilling Area Background (ppm): 1.9

Converted to Well: Yes ____ No ✓ Well I.D. #: ____

Tetra Tech NUS, Inc.

BORING LOG

PROJECT NAME: NSWC CRANE
PROJECT NUMBER: N9060 CTO 0279
DRILLING COMPANY: BOWSER MORNER
DRILLING RIG: GEO PROBE 54LT

BORING NUMBER: 13 SB 11
DATE: 3-26-03
GEOLOGIST: M. G. COCHRAN
DRILLER: J AKERS

Sample No. and Type or RQD	Depth (FL) or Run No.	Blows / 6" or RQD (%)	Sample Recovery / Sample Length	Lithology Change (Depth /FL) or Screened Interval	MATERIAL DESCRIPTION: Soil Density/ Consistency or Rock Hardness	Color	Material Classification	USCS *	Remarks	PID/FID Reading (ppm): Sample	Bamper BZ	Borehole**	Driller BZ**
0	1		2.6/			BL	TOPSOIL						
					RO	BRN	SILTY SAND	SM	MOIST@TOP	1.9	1.9	1.9	1.9
	2		4.0						FILL				
	3								DAMP@BTM				
4	4								HARD@BTM				
	5						TD 4.0						
	6												
	7												
	8												
	9												
	10												
	11												
	12												
	13												
	14												
	15												
						SAMPLED	13 S S 11 0002						
						@	915						
						SAMPLED	13 SB 110204						
						@	920						

* When rock coring, enter rock brokeness.

** Include monitor reading in 6 foot intervals @ borehole. Increase reading frequency if elevated reponse read.

Remarks: GEOPROBE MACRO CORE

Drilling Area Background (ppm): 1.9

Converted to Well: Yes ____ No ✓ Well I.D. #: ____

Tetra Tech NUS, Inc.

BORING LOG

PROJECT NAME: NSWC CRANE
PROJECT NUMBER: N9060 CTO 0279
DRILLING COMPANY: BOWSER MORNER
DRILLING RIG: GEO PROBE 54LT
BORING NUMBER: 13SB12
DATE: 3-26-03
GEOLOGIST: M. G. COCHRAN
DRILLER: J. AKERS

Sample No. and Type or RQD	Depth (Ft.) or Run No.	Blows / 6" or RQD (%)	Sample Recovery / Sample Length	Lithology Change (Depth /Ft.) or Screened Interval	MATERIAL DESCRIPTION: Soil Density/ Consistency or Rock Hardness	Color	Material Classification	USCS*	Remarks	PID/FID Reading (ppm): Sample	Sample/BZ	Borehole**	Driller BZ**
G	1		2.3/			BRN	SANDY SILT	SM	DAMP	2.1	2.1	2.1	2.1
	2		4.0						FILL	↓	↓	↓	↓
	3								BLACK @ 1.5-2.0,				
4	4								RK FRAG IN				
	5						T.D. 4.0		BTM				
	6												
	7												
	8												
	9												
	10												
	11												
	12												
	13												
	14												
	15												
						SAMPLED 13SS120002							
						@ 830							
						SAMPLED 13SB120204							
						@ 835							

* When rock coring, enter rock brokeness.

** Include monitor reading in 6 foot intervals @ borehole. Increase reading frequency if elevated reponse read.

Remarks: GEOPROBE MACRO CORE

Drilling Area Background (ppm): 2.1

Converted to Well: Yes ____ No ✓ Well I.D. #: ____

Tetra Tech NUS, Inc.

BORING LOG

PROJECT NAME: NSWC CRANE
PROJECT NUMBER: N9060 CTO 0279
DRILLING COMPANY: BOWSER MORNER
DRILLING RIG: GEOPROBE 54 LT

BORING NUMBER: 13SB13
DATE: 3-26-03
GEOLOGIST: M. G. COCHRAN
DRILLER: J. AKERS

Sample No. and Type or RQD	Depth (Ft.) or Run No.	Blows / 6" or RQD (%)	Sample Recovery / Sample Length	Lithology Change (Depth /Ft.) or Screened Interval	MATERIAL DESCRIPTION: Soil Density/ Consistency or Rock Hardness	Color	Material Classification	USCS*	Remarks	PID/FID Reading (ppm): Sample	Sampler BZ	Borehole**	Driller BZ**
0	1		3.1/			BRN	SANDY SILT	SM	DAMP	0	0	0	0
	2		4.0						FILL				
	3												
4	4												
	5						TD 4.0						
	6												
	7												
	8												
	9												
	10												
	11												
	12												
	13												
	14												
	15												
						SAMPLED 13SS130002 @ 750							
						SAMPLED 13SB130204 @ 755							

* When rock coring, enter rock brokeness.

** Include monitor reading in 6 foot intervals @ borehole. Increase reading frequency if elevated reponse read.

Remarks: GEOPROBE MACRO CORE

Drilling Area Background (ppm): 0

Converted to Well: Yes ____ No ✓ Well I.D. #: ____

Tetra Tech NUS, Inc.

BORING LOG

PROJECT NAME: NSWC CRANE
PROJECT NUMBER: N9060 CTO 0279
DRILLING COMPANY: BOWSER MORNER
DRILLING RIG: HAND AUGER
BORING NUMBER: 13SB14
DATE: 4/10/03
GEOLOGIST: Bob Balkovec
DRILLER: Jeff Akers

Sample No. and Type or RQD	Depth (FL) or Run No.	Blows / 6" or RQD (%)	Sample Recovery / Sample Length	Lithology Change (Depth /FL) or Screened Interval	MATERIAL DESCRIPTION: Soil Density/ Consistency or Rock Hardness	Color	Material Classification	USCS *	Remarks	PID/FID Reading (ppm): Sample	Sampler BZ	Borehole**	Driller BZ**
	1		1' / 1'			BR	SANDY SILT w/ SOME TOPSOIL	ML	MOIST	00			
	2			T.D. 1'									
	3						REFUSAL @ 1'						
	4						2 OFFSETS						
	5												
	6												
	7												
	8												
	9												
	10												
	11												
	12												
	13												
	14												
	15												
						SAMPLED 13SS140001							
						@ 1210							
						SAMPLED							
						@							

* When rock coring, enter rock brokeness.

** Include monitor reading in 6 foot intervals @ borehole. Increase reading frequency if elevated reponse read.

Drilling Area Background (ppm): 0.0

Remarks:

Converted to Well: Yes ____ No ✓ Well I.D. #: ____

APPENDIX B.1.2
SWMU 13 BORING LOGS AND MONITORING WELL CONSTRUCTION DIAGRAMS
ROUND 2

Tetra Tech NUS, Inc.

BORING LOG

PROJECT NAME: Crane NSWC
PROJECT NUMBER: 9060
DRILLING COMPANY: BOWSER MORNER
DRILLING RIG: VERSA SONIC

BORING No.: 13MWT27
DATE: 11-5-03
GEOLOGIST: FRED W. RAMSER
DRILLER: JON KEIFER

Sample No. and Type or RQD	Depth (Ft.) or Run No.	Blows / 6" or RQD (%)	Sample Recovery / Sample Length	Lithology Change (Depth/Ft.) or Screened Interval	Soil Density/ Consistency or Rock Hardness	Color	Material Classification	USCS*	Remarks	PID/FID Reading (ppm) Sample	Sampler BZ	Borehole**	Driller BZ**
							YEL BRN SILT+CLAY TR SAND		TOP SOIL				
							SILT + f g SAND	SC/SM					
							VARIEGATED		DECOMPOSED				
							YEL, BRN ORG GREY		BEDROCK				0
S-1	5						LAM.						
									GRADES TO A				
						YEL BRN	f-g SAND + SILT	SC	LESS DEC.				
						ORG BRN	— MOTTLED		BD RK				0
						GREY	— LAM.		STRONGLY WEATHERED				
	10		10/10	TOP OF BD RK		YEL ORG	SANDSTONE	BR					
					MED HARD		IRREGULAR LAM.						
							ABUNDANT FE STAIN						
							SOME VUGS			10			0
							PLANT FOSSILS						
S-2	15	20%											
					SOFT		COAL.	V.BR	BRITTLE				
					SOFT	V. LIGHT GREY CLAY			UNCONSOLIDATED	12			0
							GRADING TO A						
	20		10/10		MED HARD	V. LIGHT GREY SAND STONE, VUGS		BR	PLANT FOSSILS				
				TD@21'									
							SAND: 7-21						
							SCREEN 10-20						
							BENTONITE: 2-7						

* When rock coring, enter rock brokeness.

** Include monitor reading in 6 foot intervals @ borehole. Increase reading frequency if elevated reponse read.

Remarks: DRILLED TO 21 TO INSTALL SCREEN 10-20'

Drilling Area Background (ppm): 0

Converted to Well: Yes ✓ No _____ Well I.D. #: 13MWT27

WELL NO.: 13MWT27

Tetra Tech NUS, Inc.

BEDROCK
MONITORING WELL SHEET
WELL INSTALLED IN BEDROCK

PROJECT CRANE NSWC
PROJECT NO. 9060
DATE BEGUN 11-5-03
FIELD GEOLOGIST FRED W. RAMSER
GROUND ELEVATION 696.09

LOCATION SWMU 13
BORING 13MWT27
DATE COMPLETED 11-5-03
DATUM NAVD 88

DRILLER JON K
DRILLING METHOD ROTO SONIC
DEVELOPMENT METHOD BAILER/SURGE/PUMP

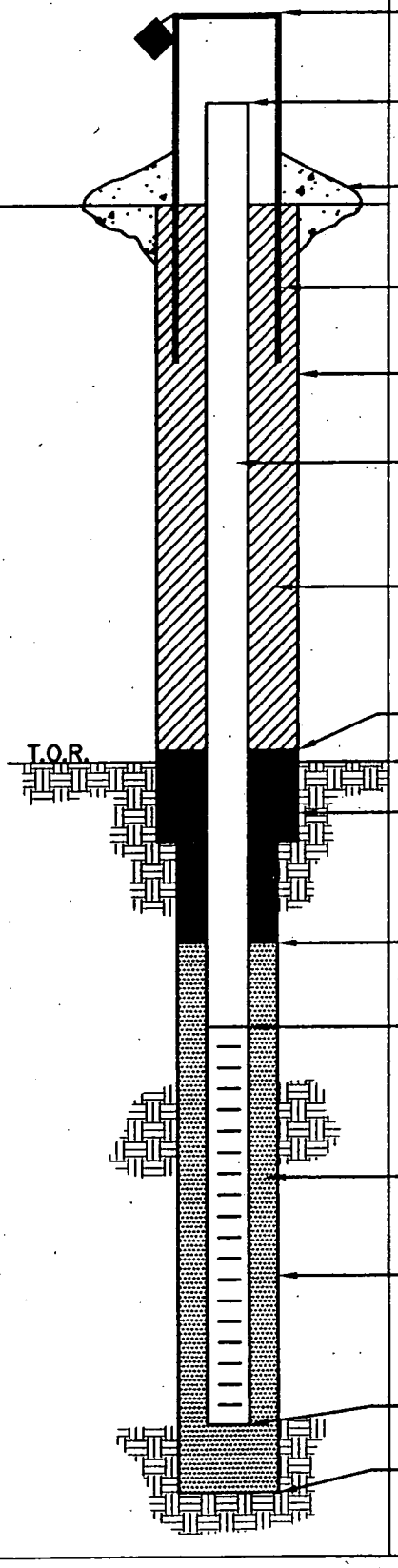

ELEVATION/HEIGHT OF TOP OF SURFACE CASING: 698.18/~3.0

ELEVATION/HEIGHT TOP OF RISER: 698.13/~2.5

TYPE OF SURFACE SEAL: 4' x 4' x 6"

I.D. OF SURFACE CASING: 4" x 4" SQ

DIAMETER OF HOLE: 8"

RISER PIPE I.D.: 2"
TYPE OF RISER PIPE: SCH 40 PVC

TYPE OF BACKFILL: BENTONITE CHIPS CETCO PURE GOLD

ELEVATION/DEPTH TOP OF SEAL: 692.09/ 4'

ELEVATION/DEPTH TOP OF BEDROCK: 687.09/ 9'

TYPE OF SEAL: BENTONITE CHIPS CETCO PURE GOLD

ELEVATION/DEPTH TOP OF SAND: 689.09/ 7'

ELEVATION/DEPTH TOP OF SCREEN: 686.09/10'
TYPE OF SCREEN: PVC
SLOT SIZE x LENGTH: 0.02 x 10'
I.D. SCREEN: 2"

TYPE OF SAND PACK: QTZ SAND 10/30 SEP/18B

DIAMETER OF HOLE IN BEDROCK: 5"
CORE/REAM: CORE

ELEVATION/DEPTH BOTTOM SCREEN: 676.09/20'
ELEVATION/DEPTH BOTTOM OF SAND: 675.09/21'
ELEVATION/DEPTH BOTTOM OF HOLE: 675.09/21'
BACKFILL MATERIAL BELOW SAND: SAND

ACAD:FORM_MWINBR.dwg 07/20/99 INL

Tetra Tech NUS, Inc.

BORING LOG

PROJECT NAME: Crane NSWC
PROJECT NUMBER: 9060
DRILLING COMPANY: BOWSER MORNER
DRILLING RIG: ROTO-SONIC

BORING No.: 13MWT28
DATE: 11-3-03
GEOLOGIST: FRED W RAMSER
DRILLER: JON KEIFER

Sample No. and Type or RQD	Depth (Ft.) or Run No.	Blows / 6" or RQD (%)	Sample Recovery / Sample Length	Lithology Change (Depth/Ft.) or Screened Interval	Soil Density/ Consistency or Rock Hardness	Color	Material Classification	USCS *	Remarks	PID/FID Reading (ppm) Sample	Sampler BZ	Borehole**	Driller BZ**
	16							SM/SC	DRILLED TO				
	17								0-17.5 W/O SPL				
	18			TOP OF BDRK					CUTTINGS YEL BRN SILT				
	19				SOFT	DK	YEL BRN MUDSTONE W/ ROCK FRAG.	VBR	+ F. GRAVEL + CLAY ~10'				
	20						MOTTLED GREY		MOTTLED GREY 16-20 WEATHERED				0
					SOFT	BLK	COAL, BRITTLE	VBR	BD RK COAL ~18'	10			
S-1		0%			MED SOFT	MED	GREY SANDSTONE,	BR					
					MED	MED	GREY SANDSTONE	VBR					
	25				SOFT								
							V. THIN BEDDED						
			7/10							8			
					MED								0
					HARD	MED	TO LIGHT GREY SANDSTONE	BR					
	30						IRREGULAR LAM.						
							OCC VUGS ~1/4"						
S-2		5%					HOR. FRAG.			9			
													0
	35												
										12			0
			4.5/10										
	40												

* When rock coring, enter rock brokeness.

** Include monitor reading in 6 foot intervals @ borehole. Increase reading frequency if elevated reponse read.

Drilling Area Background (ppm): 0.8

Remarks: CASING TO 38.5, 6" ID INSTALLED W/ 11" OD

Converted to Well: Yes ✓ No ____ Well I.D. #: 13MWT28

WELL NO.: 13 MWT 28

Tetra Tech NUS, Inc.

BEDROCK
MONITORING WELL SHEET
WELL INSTALLED IN BEDROCK

PROJECT NSWC CRANE	LOCATION SWMU 13	DRILLER JON KEIFER
PROJECT NO. 9060	BORING 13 MWT 28	DRILLING METHOD ROTO-SONIC
DATE BEGUN 11/19/03	DATE COMPLETED 11/19/03	
FIELD GEOLOGIST SCOTT GRIER		DEVELOPMENT METHOD BAILER/SURGE/PUMP
GROUND ELEVATION 703.54	DATUM NAVD 88	

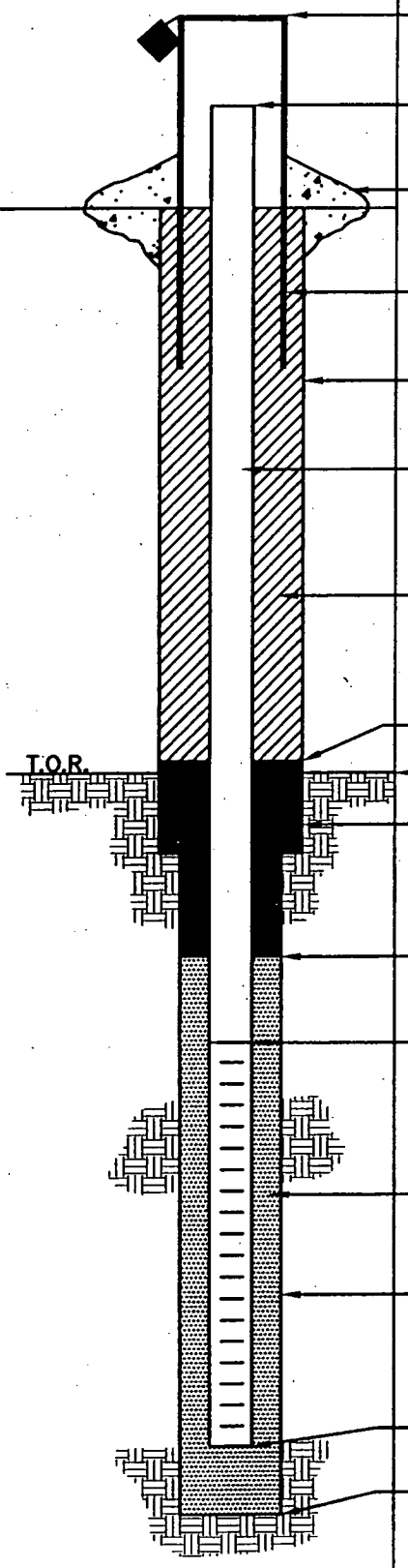

ELEVATION/HEIGHT OF TOP OF SURFACE CASING: 705.53 / 2.0

ELEVATION/HEIGHT TOP OF RISER: 705.55 / 2.0

TYPE OF SURFACE SEAL: CONCRETE

I.D. OF SURFACE CASING: 4" x 4" STEEL

DIAMETER OF HOLE: 11" down to 38.5

ISOLATION CASING 6" DIA. DEPTH: 38.5

RISER PIPE I.D.: 2"

TYPE OF RISER PIPE: 2.5" PVC

TYPE OF BACKFILL: BENTONITE

ELEVATION/DEPTH TOP OF SEAL: 700.54 / 3'

ELEVATION/DEPTH TOP OF BEDROCK: 685.04 / 18.5

TYPE OF SEAL: BENTONITE PURE GOLD CHIPS GEL CETOO

ELEVATION/DEPTH TOP OF SAND: 628.54 / 75

ELEVATION/DEPTH TOP OF SCREEN: 625.54 / 78

TYPE OF SCREEN: PVC

SLOT SIZE x LENGTH: 20 x 10'

I.D. SCREEN: 2" - 20 slot

TYPE OF SAND PACK: QTZ MED SAND

DIAMETER OF HOLE IN BEDROCK:

CORE/REAM: 4" / 5"

ELEVATION/DEPTH BOTTOM SCREEN: 615.54 / 88

ELEVATION/DEPTH BOTTOM OF SAND: 615.54 / 88

ELEVATION/DEPTH BOTTOM OF HOLE: 615.54 / 88

BACKFILL MATERIAL BELOW SAND: N/A

ACAD:FORM_MWINBR.dwg 07/20/99 INL

Tetra Tech NUS, Inc.

BORING LOG

PROJECT NAME: Crane NSWC
PROJECT NUMBER: 9060
DRILLING COMPANY: BOWSER
DRILLING RIG: VERSA-SONIC

BORING No.: 13 MWT 28
DATE: 11/19/03
GEOLOGIST: S. GRIER
DRILLER: J. REIFER

Sample No. and Type or RQD	Depth (Ft.) or Run No.	Blows / 6" or RQD (%)	Sample Recovery / Sample Length	Lithology Change (Depth/Ft.) or Screened Interval	MATERIAL DESCRIPTION: Soil Density/ Consistency or Rock Hardness	Color	Material Classification	USCS*	Remarks	PID/FID Reading (ppm): Sample	Sampler BZ	Borehole**	Driller BZ**
	38				~~HARD~~ MED	DARK GREY	SILTY SANDSTONE		GREY W/ BLACK LAMS	0.0			0.8
							GREY SANDSTONE W/ BLACK LAMS OF SILT						
					VERY HARD	GREY	SANDSTONE ~~[illegible]~~ few lams						
					HARD	GREY-BLACK	SILTY SANDSTONE GREY S.S. W BLACK LAMS OF SILT INCREASING SILT						
C1	48	27 10%	9/10							10.0			0.8
C2	58	5%	10/10							1.0			0.8
					MED SOFT ~~HARD~~	BLACK	BLACK SHALE THINLY LAMINATED		FISSILE THIN LAMS				
					HARD	GREY	SILTY SANDSTONE						
					MED. SOFT	BLACK	SHALE ~~DECREASING SILT~~		FISSILE THIN LAMS				

* When rock coring, enter rock brokeness.

** Include monitor reading in 6 foot intervals @ borehole. Increase reading frequency if elevated reponse read.

Drilling Area Background (ppm): 0.8

Remarks: ~~0830~~ 100 cleaned out hole - H_2O level = 77.0'
1100 H_2O level = 76.45

Converted to Well: Yes ✓ No _____ Well I.D. #: 13 MWT 28

Tetra Tech NUS, Inc.

BORING LOG

PROJECT NAME: Crane NSWC
PROJECT NUMBER: 9060
DRILLING COMPANY: BOWSER MORNER
DRILLING RIG: VERSA-SONIC

BORING No.: 13 MWT 28
DATE: 11/19/03
GEOLOGIST: SCOTT GRIER
DRILLER: JON KEIFER

Sample No. and Type or RQD	Depth (Ft.) or Run No.	Blows / 6" or RQD (%)	Sample Recovery / Sample Length	Lithology Change (Depth/Ft.) or Screened Interval	MATERIAL DESCRIPTION: Soil Density/ Consistency or Rock Hardness	Color	Material Classification	USCS*	Remarks	PID/FID Reading (ppm): Sample	Sampler BZ	Borehole**	Driller BZ**
	63	~~43~~			MED ~~HARD SOFT~~	BLACK	~~SILTY SAND~~ SHALE BLACK, BRITTLE	BR	FISSILE - THIN LAMS				
							SILTY SANDSTONE	SM					
C3							DECREASING SILT						
	68	3%	9/10							80			0.0
					VERY HARD	GREY	GREY SANDSTONE						
					MED SOFT ~~BRITTLE~~	BLACK	SHALE THIN LAMINATIONS						
C4													
	78	3%	8.5/10							65			0.8
					VERY HARD	GREY BROWN BLACK	SANDSTONE (VARVED)						
					MED SOFT ~~HARD~~	BLACK	SHALE THIN LAMS		FISSILE - THIN LAMS				
									Screen set @ 98' → 78'				
C5													
	88	5%	7.5/10		VERY HARD	GREY BROWN	SANDSTONE (VARVED)			02			0.8

* When rock coring, enter rock brokeness.

**Include monitor reading in 6 foot intervals @ borehole. Increase reading frequency if elevated reponse read.

Drilling Area Background (ppm): 0.8

Remarks: 1130 hole is blown out + H_2O level = 86'
1230 H_2O level = 85.5'

Converted to Well: Yes ✓ No _____ Well I.D. #: 13 MWT 28

Tetra Tech NUS, Inc.

BORING LOG

PROJECT NAME: Crane NSWC
PROJECT NUMBER: 9060
DRILLING COMPANY: BOWSER-MORNER
DRILLING RIG: CME 550
BORING No.: 13MWT29
DATE: 11-4-03
GEOLOGIST: M. G. COCHRAN
DRILLER: J. WALSH

Sample No. and Type or RQD	Depth (Ft.) or Run No.	Blows / 6" or RQD (%)	Sample Recovery / Sample Length	Lithology Change (Depth/Ft.) or Screened Interval	MATERIAL DESCRIPTION: Soil Density/ Consistency or Rock Hardness	Color	Material Classification	USCS *	Remarks	PID/FID Reading (ppm): Sample	Sampler BZ	Borehole**	Driller BZ**
						BRN	SILT	SM		—	—	0	0
	4												
S1		4/5	2.0/		M. DENSE	BRN	CLAYEY SILT	SM	DAMP	0	0	0	0
	6	6/4	2.0			GR BRN			FILL TO 9'?				
				9.0									
	9			XXX									
S2		6/100/3"	1.4/		SOFT	RD BRN	SHALE, WEATHERED		HARD DRILLING	0	0	0	0
	11		2.0										
									HSA REFUSAL @13.5'				
									H_2O IN CHIPS FROM HOLE				
									H_2O ZONE @19' PER DRILLER				
							TD 20'						

* When rock coring, enter rock brokeness.

** Include monitor reading in 6 foot intervals @ borehole. Increase reading frequency if elevated reponse read.

Drilling Area Background (ppm): 0

Remarks: HSA 4 1/4" ID, 8 1/2" O.D. TO 13.5', 4" ROLLER BIT W/ AIR @ 13.5' THRU HSA. 4" ROLLER BIT

Converted to Well: Yes ✓ No ____ Well I.D. #: 13MWT29

WELL NO.: 13MWT29

Tetra Tech NUS, Inc.

BEDROCK MONITORING WELL SHEET WELL INSTALLED IN BEDROCK

PROJECT CRANE	LOCATION CRANE, IN.	DRILLER J. WALSH
PROJECT NO. 9060	BORING 13 MW T29	DRILLING METHOD HSA / A.R.
DATE BEGUN 11-4-03	DATE COMPLETED 11-4-03	
FIELD GEOLOGIST M. G. COCHRAN		DEVELOPMENT METHOD BAILER/SURGE/PUMP
GROUND ELEVATION 698.10	DATUM NAVD 88	

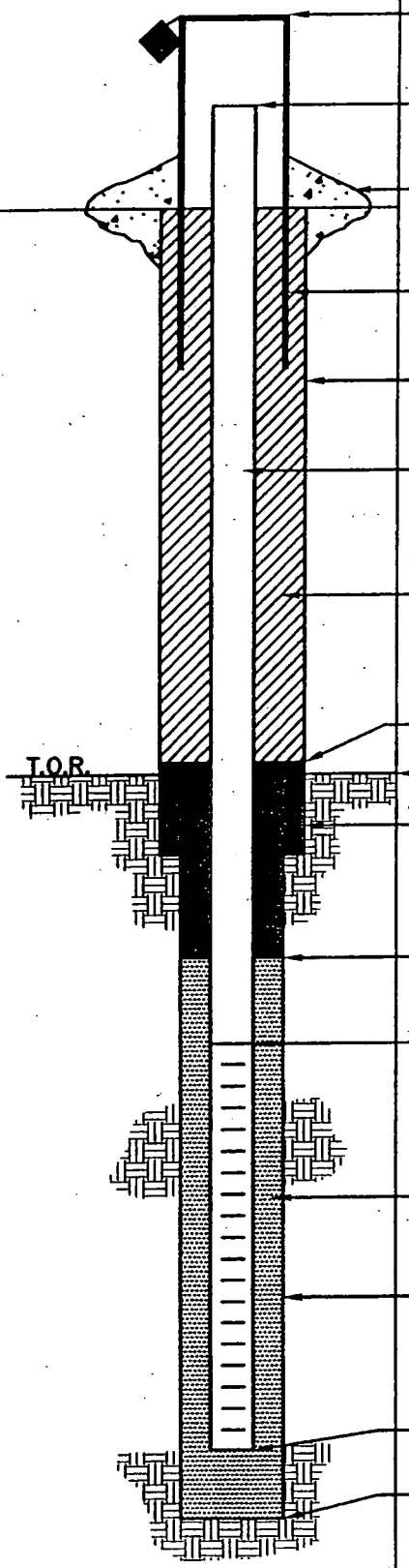

ELEVATION/HEIGHT OF TOP OF SURFACE CASING: 700.50 / 2.4

ELEVATION/HEIGHT TOP OF RISER: 700.44 / 2.34

TYPE OF SURFACE SEAL: CONCRETE

I.D. OF SURFACE CASING: 4" x 4" SQ STEEL

DIAMETER OF HOLE: 8 1/2 → 13', 4" → TD

RISER PIPE I.D.: 2"

TYPE OF RISER PIPE: SCH 40 PVC

TYPE OF BACKFILL: BENTONITE CHIPS

ELEVATION/DEPTH TOP OF SEAL: 695.1 / 3'

ELEVATION/DEPTH TOP OF BEDROCK: 689.1 9'

TYPE OF SEAL: CETCO PURE GOLD BENTONITE CHIPS

ELEVATION/DEPTH TOP OF SAND: 691.1 / 7

ELEVATION/DEPTH TOP OF SCREEN: 689.1 / 9

TYPE OF SCREEN: PVC SCH 40

SLOT SIZE x LENGTH: .020 x 10'

I.D. SCREEN: 2"

TYPE OF SAND PACK: GLOBAL MEDIUM SAND

DIAMETER OF HOLE IN BEDROCK: 4"

CORE/REAM:

ELEVATION/DEPTH BOTTOM SCREEN: 679.1 / 19

ELEVATION/DEPTH BOTTOM OF SAND: 678.1 / 20

ELEVATION/DEPTH BOTTOM OF HOLE: 678.1 / 20

BACKFILL MATERIAL BELOW SAND:

ACAD:FORM_MWINBR.dwg 07/20/99 INL

Tetra Tech NUS, Inc.

BORING LOG

PROJECT NAME: Crane NSWC
PROJECT NUMBER: 9060
DRILLING COMPANY: BOWSER MORNER
DRILLING RIG: CME 550 ATV

BORING No.: 13 MWT 30
DATE: 11-6-03
GEOLOGIST: M. G. COCHRAN
DRILLER: J WALSH

Sample No. and Type or RQD	Depth (Ft.) or Run No.	Blows / 6" or RQD (%)	Sample Recovery / Sample Length	Lithology Change (Depth/Ft.) or Screened Interval	MATERIAL DESCRIPTION: Soil Density/ Consistency or Rock Hardness	Color	Material Classification	USCS *	Remarks	PID/FID Reading (ppm): Sample	Sampler BZ	Borehole**	Driller BZ**
						DK. BRN	CLAYEY SILT			–	–	0	0
						LT BRN	CLAYEY SILT						
				15					HARD DRILLING @ 15'				
						LT BRN							
						BL	COAL						
						LT GREY							
							TD 25.0						

* When rock coring, enter rock brokeness.

** Include monitor reading in 6 foot intervals @ borehole. Increase reading frequency if elevated reponse read.

Drilling Area Background (ppm): –

Remarks: 4 1/4 ID / 8 1/2 OD HSA TO 15' 4" ARW ROLLER BIT THERE AFTER. LOGGED DRILL CUTTINGS

Converted to Well: Yes ✓ No _____ Well I.D. #: 13MWT30

WELL NO.: 13MWT30

Tetra Tech NUS, Inc.

BEDROCK
MONITORING WELL SHEET
WELL INSTALLED IN BEDROCK

PROJECT CRANE	LOCATION CRANE, IN	DRILLER BONSER-MORNE
PROJECT NO. 9060	BORING 13MWT30	DRILLING METHOD HSA / AR
DATE BEGUN 11-6-03	DATE COMPLETED 11-6-03	
FIELD GEOLOGIST M.G. COCHRAN		DEVELOPMENT METHOD BAILER/PUMP/SURGE
GROUND ELEVATION 696.57	DATUM NAVD 88	

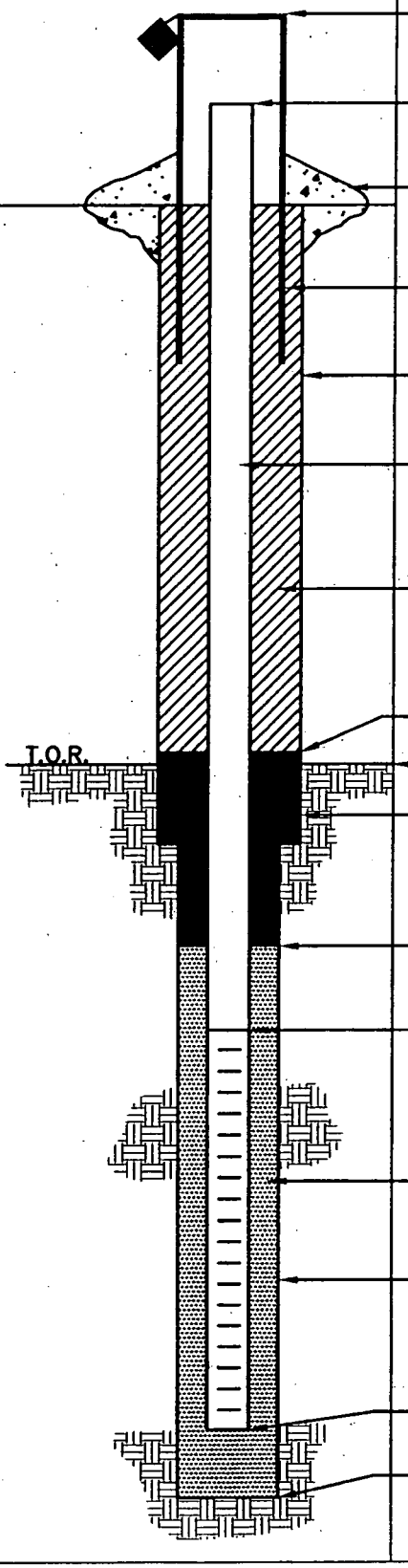

ELEVATION/HEIGHT OF TOP OF SURFACE CASING: 698.97/2.5

ELEVATION/HEIGHT TOP OF RISER: 698.94/2.5

TYPE OF SURFACE SEAL: CONCRETE

I.D. OF SURFACE CASING: 4"x4"

DIAMETER OF HOLE: 8 1/2" TO 15', 4" TO TD

RISER PIPE I.D.: 2"

TYPE OF RISER PIPE: PVC SCHEDULE 40

TYPE OF BACKFILL: CETCO PURE GOLD MEDIUM CHIPS

ELEVATION/DEPTH TOP OF SEAL: 693.57/3'

ELEVATION/DEPTH TOP OF BEDROCK: 681.57/15

TYPE OF SEAL: CETCO PURE GOLD MEDIUM CHIPS

ELEVATION/DEPTH TOP OF SAND: 684.57/12

ELEVATION/DEPTH TOP OF SCREEN: 682.57/14

TYPE OF SCREEN: PVC SLOTTED

SLOT SIZE x LENGTH: .020 x 10'

I.D. SCREEN: 2"

TYPE OF SAND PACK: BEST MEDIUM SAND

DIAMETER OF HOLE IN BEDROCK: 4"

CORE/REAM:

ELEVATION/DEPTH BOTTOM SCREEN: 672.57/24

ELEVATION/DEPTH BOTTOM OF SAND: 671.57/25

ELEVATION/DEPTH BOTTOM OF HOLE: 671.57/25

BACKFILL MATERIAL BELOW SAND: N/A

ACAD:FORM_MWINBR.dwg 07/20/99 INL

Tetra Tech NUS, Inc.

BORING LOG

PROJECT NAME: Crane NSWC
PROJECT NUMBER: 9060
DRILLING COMPANY: BOWSER-MORNER
DRILLING RIG: CME 550

BORING No.: 13MWT31
DATE: 11-5-03
GEOLOGIST: M. G. COCHRAN
DRILLER: J. WALSH

Sample No. and Type or RQD	Depth (Ft.) or Run No.	Blows / 6" or RQD (%)	Sample Recovery / Sample Length	Lithology Change (Depth/Ft.) or Screened Interval	MATERIAL DESCRIPTION: Soil Density/ Consistency or Rock Hardness	Color	Material Classification	USCS*	Remarks	PID/FID Reading (ppm): Sample	Sampler BZ	Borehole**	Driller BZ**
						LT BRN	CLAYEY SILT	SM	LOOKS NATL. DAMP			0	0
				10.0					HARD DRILL @10'				
				XXXX									
	12.5												
		36	.4/.8		SOFT	GREY	SHALE.		LAMINATED, DAMP	0	0	0	0
	14.5	50/3"											
							TD 20.0						

* When rock coring, enter rock brokeness.

** Include monitor reading in 6 foot intervals @ borehole. Increase reading frequency if elevated reponse read.

Drilling Area Background (ppm): 0

Remarks: 4 1/4 ID / 8 1/2 OD HSA TO 14.5', 4" ROTARY BIT W AIR TO TD. STANDBY FOR 1/2 HR AT 20' TO WAIT FOR N_2O, 2" H_2O IN HOLE

Converted to Well: Yes ✓ No _____ Well I.D. #: 13MWT31

WELL NO.: 13MWT31

Tetra Tech NUS, Inc.

BEDROCK MONITORING WELL SHEET WELL INSTALLED IN BEDROCK

PROJECT: CRANE
PROJECT NO.: 9060
DATE BEGUN: 11-5-03
FIELD GEOLOGIST: M. G. COCHRAN
GROUND ELEVATION: 693.56

LOCATION: CRANE IN
BORING: 13MWT31
DATE COMPLETED: 11-5-03
DATUM: NAVD 88

DRILLER: BOWSER-MORNER
DRILLING METHOD: HSA / AR
DEVELOPMENT METHOD: BAILER/ PUMP/SURGE

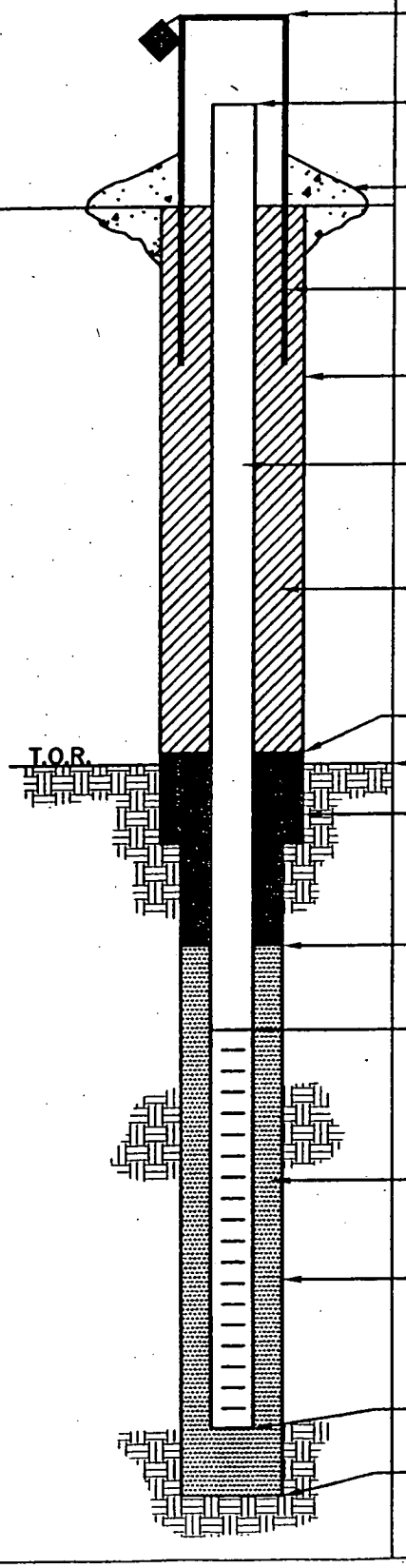

ELEVATION/HEIGHT OF TOP OF SURFACE CASING: 696.15/2.59

ELEVATION/HEIGHT TOP OF RISER: 696.21/2.65

TYPE OF SURFACE SEAL: CONCRETE

I.D. OF SURFACE CASING: 4" x 4" SQ STEEL

DIAMETER OF HOLE: 8 1/2" TO 14.5; 4" TO TD

RISER PIPE I.D.: 2" ID
TYPE OF RISER PIPE: PVC SCHEDULE 40

TYPE OF BACKFILL: CETCO PURE GOLD BENTONITE CHIPS

ELEVATION/DEPTH TOP OF SEAL: 690.56/3'

ELEVATION/DEPTH TOP OF BEDROCK: 683.56/10'

TYPE OF SEAL: CETCO PURE GOLD BENTONITE CHIPS

ELEVATION/DEPTH TOP OF SAND: 685.56/8'

ELEVATION/DEPTH TOP OF SCREEN: 683.56/10.
TYPE OF SCREEN: PVC SLOTTED
SLOT SIZE x LENGTH: .020 X 10'
I.D. SCREEN: 2"

TYPE OF SAND PACK: GLOBAL MEDIUM SAND

DIAMETER OF HOLE IN BEDROCK: 4"
CORE/REAM:

ELEVATION/DEPTH BOTTOM SCREEN: 673.56/20
ELEVATION/DEPTH BOTTOM OF SAND: 673.56/20.
ELEVATION/DEPTH BOTTOM OF HOLE: 673.56/20.
BACKFILL MATERIAL BELOW SAND: N/A

ACAD:FORM_MWNBR.dwg 07/20/99 INL

Tetra Tech NUS, Inc.

BORING LOG

PROJECT NAME: Crane NSWC
PROJECT NUMBER: 9060
DRILLING COMPANY: BOWSER MORNER
DRILLING RIG: VERSA-SONIC

BORING No.: 13MWT32
DATE: 10-28-03
GEOLOGIST: FRED W RAMSER
DRILLER: JON K

Sample No. and Type or RQD	Depth (FL) or Run No.	Blows / 6" or RQD (%)	Sample Recovery / Sample Length	Lithology Change (Depth/Ft.) or Screened Interval	Soil Density/ Consistency or Rock Hardness	Color	Material Classification	USCS*	Remarks	PID/FID Reading (ppm) Sample	Sampler BZ	Borehole**	Driller BZ**
						MOD	YEL BRN SILT + SAND GRADING TO	SC/SM					
S-1 1521						LT YEL BRN	WEATHERED SAND STONE @ 2.5						
				TOP OF BDRK									
							STRONGLY WEATHERED						
	5						SAND STONE			2			0
							SANDSTONE		NO RECOVERY @ 5-10				
							WEATHERED		WEATHERED				
									BDRK ? YEL BRN				
									@ CUTTINGS	5			
	10												0
					MED	YEL	BRN SANDSTONE	BR					
					HARD		MED BEDDING		IRON				
									STAINING				
									LAMINATIONS	10			0
S-2	15	1.99%			SOFT		SAND + SILT	BR	STRONGLY WEATHERED				
					MED	YEL	BRN SANDSTONE	BR	V. BR				
					HARD		LOW ∡ FRAC						
							Fe STAINED LAM.		H_2O=26'4" @				
									1652 (BTC)	12			0
	20		8/10										
							LESS Fe STAINING		WL=9' BGS 10-29-03				
S-3					MED SOFT	LT	GREY SILT SAND STONE	VBR	-SCREEN 8-18				
		20%			SOFT	DK	GREY SILT STONE		-SAND 5-20	7			0
							GRADING TO MUDSTONE		-BENT CHIP 20-25				
			5/5			BLK	SHALE		-SEAL 2-5				

* When rock coring, enter rock brokeness.

** Include monitor reading in 6 foot intervals @ borehole. Increase reading frequency if elevated reponse read.

Drilling Area Background (ppm): —

Remarks: STARTED USING AIR ONLY, HIT BDRK @ 2.5' WILL CONVERT TO H_2O. SHALLOW WELL
TD=25'

Converted to Well: Yes ✓ No _____ Well I.D. #: 13MWT32

WELL NO.: 13TMWT32

Tetra Tech NUS, Inc.

BEDROCK MONITORING WELL SHEET WELL INSTALLED IN BEDROCK

PROJECT CRANE NSWC	LOCATION SWMU 13	DRILLER JON KEIFER
PROJECT NO. 9060	BORING 13MWT32	DRILLING METHOD ROTO-SONIC
DATE BEGUN 10-28-03	DATE COMPLETED 10-29-03	
FIELD GEOLOGIST FRED W. RAMSER		DEVELOPMENT METHOD BAILER/PUMP/SURGE
GROUND ELEVATION 693.62	DATUM NAVD	

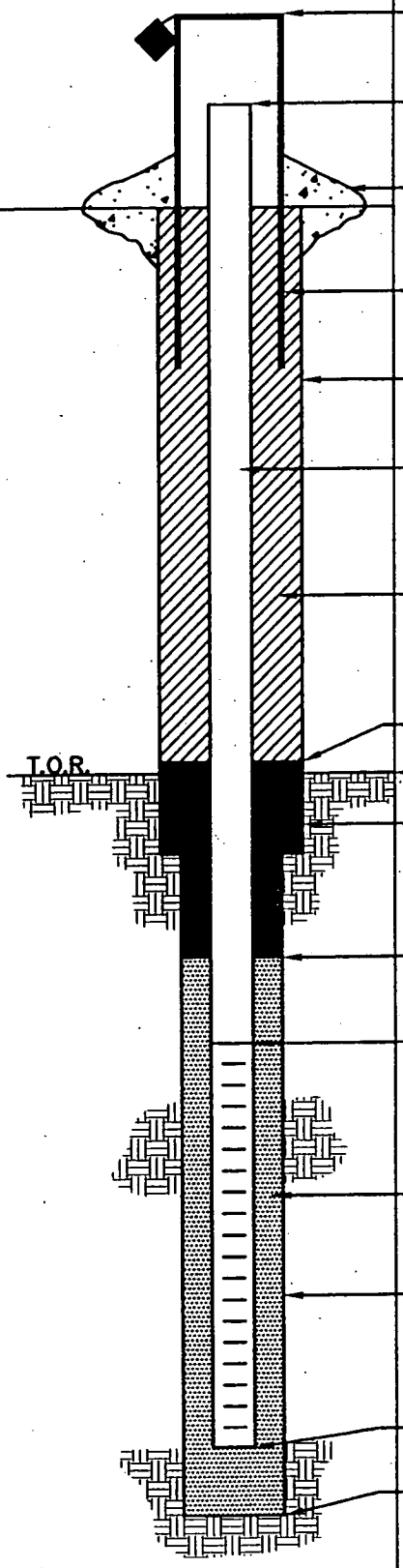

ELEVATION/HEIGHT OF TOP OF SURFACE CASING: 696.06 / 2.44

ELEVATION/HEIGHT TOP OF RISER: 696.04 / 2.42

TYPE OF SURFACE SEAL: CONCRETE 4' x 4' x 6"

I.D. OF SURFACE CASING: 4" x 4"

DIAMETER OF HOLE: 8"

RISER PIPE I.D.: 2"

TYPE OF RISER PIPE: SCH 40 PVC 2" Ø

TYPE OF BACKFILL: BENTONITE CHIPS CETCO PURE GOLD

ELEVATION/DEPTH TOP OF SEAL: 691.62 / 2'

ELEVATION/DEPTH TOP OF BEDROCK: 691.12 / 2.5'

TYPE OF SEAL: BENTONITE CHIPS CETCO PURE GOLD

ELEVATION/DEPTH TOP OF SAND: 688.62 / 5'

ELEVATION/DEPTH TOP OF SCREEN: 685.62 / 8'

TYPE OF SCREEN: PVC

SLOT SIZE x LENGTH: 0.02 x 10'

I.D. SCREEN: 2"

TYPE OF SAND PACK: QTZ SAND 10/30 SEP/18B

DIAMETER OF HOLE IN BEDROCK: 5"

CORE/REAM: CORE BIT (4.25 IN DIA)

ELEVATION/DEPTH BOTTOM SCREEN: 675.62 / 18'

ELEVATION/DEPTH BOTTOM OF SAND: 673.62 / 20'

ELEVATION/DEPTH BOTTOM OF HOLE: 668.62 / 25'

BACKFILL MATERIAL BELOW SAND: BENTONITE CHIPS

ACAD:FORM_MWINBR.dwg 07/20/99 INL

Tetra Tech NUS, Inc.

BORING LOG

PROJECT NAME: Crane NSWC
PROJECT NUMBER: 9060
DRILLING COMPANY: BOWSER-MORNER
DRILLING RIG: CME 550 ATV

BORING No.: 13MWT33
DATE: 11-6-03
GEOLOGIST: M. G. COCHRAN
DRILLER: J. WALSH

Sample No. and Type or RQD	Depth (Ft.) or Run No.	Blows / 6" or RQD (%)	Sample Recovery / Sample Length	Lithology Change (Depth/Ft.) or Screened Interval	MATERIAL DESCRIPTION: Soil Density/ Consistency or Rock Hardness	Color	Material Classification	USCS *	Remarks	PID/FID Reading (ppm): Sample	Sampler BZ	Borehole**	Driller BZ**
	0												
S1		2/4	1.5/		LOOSE	DK BRN	CLAYEY SILT	SM	DAMP, LOOKS NAT	0	0	0	0
	2	6/7	2.0				TR SAND @ BTM						
S2		7/9	1.5/		M DENSE	LT BRN	SANDY SILT	SM	DAMP. LOOKS NAT.	0	0	0	0
	4	9/12	2.0										
S3		6/7	1.1/		M DENSE	LT BRN	SILT, TR CLAY	SM	DAMP,	0	0	0	0
	6	8/13	2.0										
S4		10/12	1.7/		M DENSE	LT BRN	SILT, MICACEOUS	SM		0	0	0	0
	8	18/26	2.0										
S5		28/46	1.3/		V. DENSE	LT BRN	SILTY SAND/	SM	FE STAINED. LAMINATED AT	0	0	0	0
	10	38/100/5"	2.0	10.0			SAPROLITE		BTM,				
				XXX									
C1			3.9/										
3.9/		39%	10.0		SOFT	DK GREY	SHALE,		DAMP, SLIGHT FE STAINING IN 1 VERT FRAC AT BTM.	0	0	0	0
10.0									BLOCKY				
							TD 20'						

* When rock coring, enter rock brokeness.

** Include monitor reading in 6 foot intervals @ borehole. Increase reading frequency if elevated reponse read.

Drilling Area Background (ppm): 0

Remarks: HSA TO 10' 4¼ ID. 8½ OD. 4" A.R. CORE FROM 10' TO TD. 2" H2O IN HOLE AT BTM OF RUN

Converted to Well: Yes ✓ No _____ Well I.D. #: _____

WELL NO.: 13MWT33

Tetra Tech NUS, Inc.

BEDROCK MONITORING WELL SHEET WELL INSTALLED IN BEDROCK

PROJECT CRANE	LOCATION CRANE IN	DRILLER BOWSER-MORNER
PROJECT NO. 9060	BORING 13MWT33	DRILLING METHOD HSA / AR
DATE BEGUN 11-6-03	DATE COMPLETED 11-6-03	
FIELD GEOLOGIST M. G. COCHRAN		DEVELOPMENT METHOD BAILER/PUMP/SURGE
GROUND ELEVATION 700.14	DATUM NAVD	

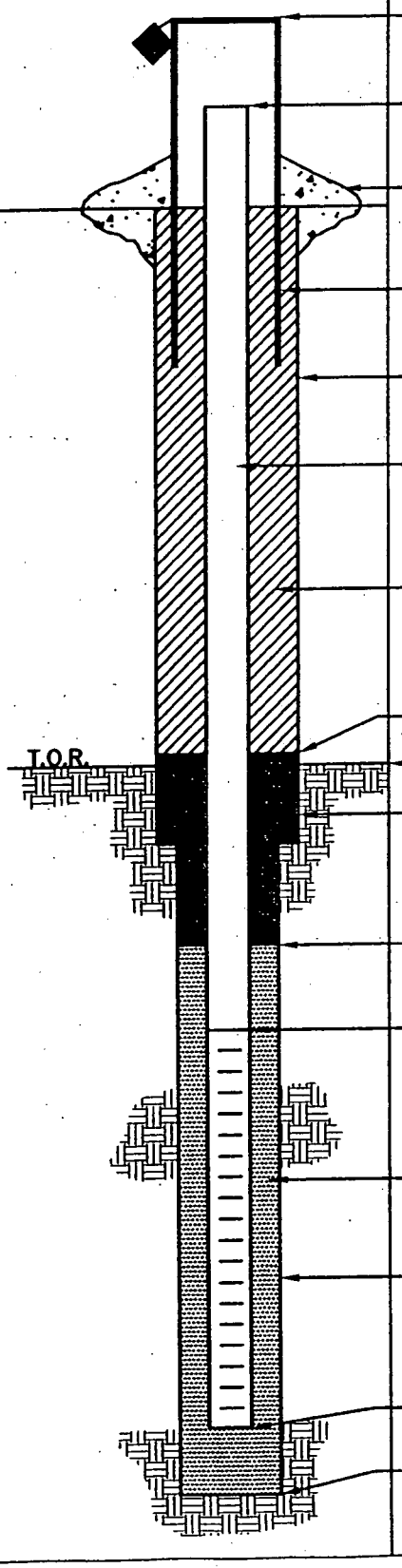

ELEVATION/HEIGHT OF TOP OF SURFACE CASING: 702.05/2.0

ELEVATION/HEIGHT TOP OF RISER: 701.97/1.9

TYPE OF SURFACE SEAL: CONCRETE

I.D. OF SURFACE CASING: 4" x 4" SQ

DIAMETER OF HOLE: 8 1/2 TO 10', 4" TO TD

RISER PIPE I.D.: 2"

TYPE OF RISER PIPE: PVC

TYPE OF BACKFILL: CETCO PURE GOLD MEDIUM PELLETS

ELEVATION/DEPTH TOP OF SEAL: 697.14/3

ELEVATION/DEPTH TOP OF BEDROCK: 690.14/10

TYPE OF SEAL: CETCO PURE GOLD MEDIUM PELLETS

ELEVATION/DEPTH TOP OF SAND: 692.14/8

ELEVATION/DEPTH TOP OF SCREEN: 690.14/10

TYPE OF SCREEN: PVC SLOTTED

SLOT SIZE x LENGTH: 020 X 10'

I.D. SCREEN: 2"

TYPE OF SAND PACK: BEST MEDIUM SAND

DIAMETER OF HOLE IN BEDROCK: 4"

CORE/REAM:

ELEVATION/DEPTH BOTTOM SCREEN: 680.14/20

ELEVATION/DEPTH BOTTOM OF SAND: 680.14/20

ELEVATION/DEPTH BOTTOM OF HOLE: 680.14/20

BACKFILL MATERIAL BELOW SAND:

ACAD:FORM_MWINBR.dwg 07/28/99 INL

Tetra Tech NUS, Inc.

BORING LOG

PROJECT NAME: Crane NSWC
PROJECT NUMBER: 9060
DRILLING COMPANY: BOWSER-MORNER
DRILLING RIG: CME 550 ATV

BORING No.: 13MWT34
DATE: 11-11-03
GEOLOGIST: M.G. COCHRAN
DRILLER: J. WALSH

Sample No. and Type or RQD	Depth (Ft.) or Run No.	Blows / 6" or RQD (%)	Sample Recovery / Sample Length	Lithology Change (Depth/Ft.) or Screened Interval	Soil Density/ Consistency or Rock Hardness	Color	Material Classification	USCS *	Remarks	PID/FID Reading (ppm) Sample	Sampler BZ	Borehole**	Driller BZ**
						BRN BL	SILT		FILL, BORING LOCATED IN REMEDIATION AREA FILL - 4'	-	-	.6	0
	4												
S1		10/10	.9/			RD BRN	SILTY SAND	SM	LOOKS NTL	.6	0	.6	0
	6	47/50	2.0	6.0					WEATHERED SS @ BTM				
	8												
S2		18/50/5"	.4/			LT GREY	SHALY SILTSTONE		DAMP WEATHERED.	.6	.6	.6	.6
	10		.7										
									WIT H2O @ 12.5'				
							TD 20.5'						

* When rock coring, enter rock brokeness.

** Include monitor reading in 6 foot intervals @ borehole. Increase reading frequency if elevated reponse read.

Drilling Area Background (ppm): 0-.6

Remarks: 8 1/2 OD 4 1/4 ID HSA TO 10', 4" ROLLER BIT TO TD.

Converted to Well: Yes ✓ No _____ Well I.D. #: 13MWT34

WELL NO.: 13MWT34

Tetra Tech NUS, Inc.

BEDROCK MONITORING WELL SHEET WELL INSTALLED IN BEDROCK

PROJECT: NWSC CRANE
PROJECT NO.: 9060
DATE BEGUN: 11-11-03
FIELD GEOLOGIST: M. G. COCHRAN
GROUND ELEVATION: 693.35

LOCATION: CRANE IN.
BORING: 13MWT34
DATE COMPLETED: 11-11-03
DATUM: NAVD

DRILLER: BOWSER-MORNER
DRILLING METHOD: HSA/AR
DEVELOPMENT METHOD: BAILER/SURGE/PUMP

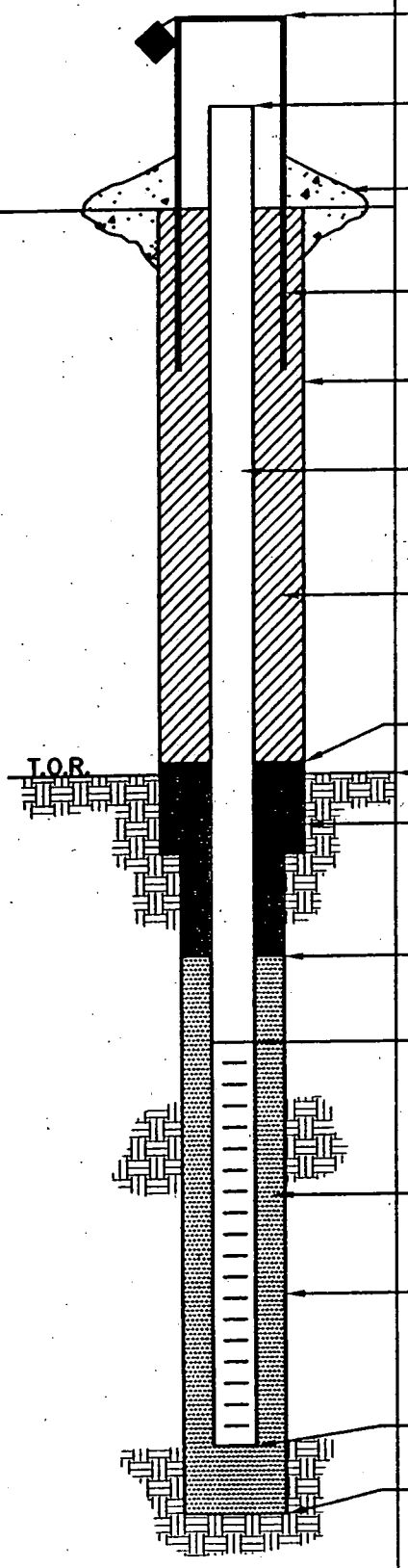

ELEVATION/HEIGHT OF TOP OF SURFACE CASING: 695.83/2.5

ELEVATION/HEIGHT TOP OF RISER: 695.93/2.5

TYPE OF SURFACE SEAL: CONCRETE

I.D. OF SURFACE CASING: 4" x 4" SQ

DIAMETER OF HOLE: 8 1/2 TO 10', 4" TO TD

RISER PIPE I.D.: 2"
TYPE OF RISER PIPE: PVC SCHEDULE 40

TYPE OF BACKFILL: CETCO PURE GOLD MEDIUM BENTONITE CHIPS

ELEVATION/DEPTH TOP OF SEAL: 690.35/3

ELEVATION/DEPTH TOP OF BEDROCK: 687.35/6

TYPE OF SEAL: CETCO PURE GOLD MEDIUM BENTONITE CHIPS

ELEVATION/DEPTH TOP OF SAND: 685.35/8

ELEVATION/DEPTH TOP OF SCREEN: 683.35/10
TYPE OF SCREEN: PVC SLOTTED
SLOT SIZE x LENGTH: .020 x 10'
I.D. SCREEN: 2"

TYPE OF SAND PACK: GLOBAL MEDIUM SAND

DIAMETER OF HOLE IN BEDROCK: 4"
CORE/REAM:

ELEVATION/DEPTH BOTTOM SCREEN: 673.35/20
ELEVATION/DEPTH BOTTOM OF SAND: 672.85/20.5
ELEVATION/DEPTH BOTTOM OF HOLE: 672.85/20.5
BACKFILL MATERIAL BELOW SAND: N/A

ACAD:FORM_MWINBR.dwg 07/20/99 INL

Tetra Tech NUS, Inc.

BORING LOG

PROJECT NAME: Crane NSWC
PROJECT NUMBER: 9060
DRILLING COMPANY: BOWSER MORNER
DRILLING RIG: VERSA-SONIC

BORING No.: 13MWT35
DATE: 10-28-03
GEOLOGIST: FRED WRAMSER
DRILLER: JOHN K

Sample No. and Type or RQD	Depth (Ft.) or Run No.	Blows / 6" or RQD (%)	Sample Recovery / Sample Length	Lithology Change (Depth/Ft.) or Screened Interval	Soil Density/ Consistency or Rock Hardness	Color	Material Classification	USCS *	Remarks	PID/FID Reading (ppm) Sample	Sampler BZ	Borehole**	Driller BZ**
									YEL-BRN				
									MOTTLED GREY 0-10'				
									10-20 YEL BRN CHANGING TO				
	19								MED BRN GREY TO 20'	2			
	20				MED	GREY	SAND STONE	BR	TRACE AMOUNT				0
					HARD		MED BEDDED		CHARCOAL/PLANT FOSSILS				
					SOFT	DK	IRREGULAR LAMINATION						
						GREY	SILT + CLAY W/ ROCK FRAG.		FRAGS = SHALE SILTSTONE				
		15%			MED SOFT		SILTSTONE ALT LAMINATION BLK	V.BR	BLK = CHARCOAL GREY = SILTSTONE	5			0
S-1	25				HARD	GREY	+ GREY SAND STONE		TRACE				
1048							MED BEDDED		CHARCOAL/ PLANT FOSSIL				
							W/IRREGULAR LAM.						
							SILT STONE ALT		CHARCOAL	6			0
			8 10'				LAMINATION BLK+GREY	V.BR	+SILTSTONE				
	30				MED SOFT	DK	ALT V. THIN BEDS	V.BR	W/PLANT FOSSILS				
						GREY	OF SILT + SAND STONE		AND CHARCOAL				
							-CHARCOAL LAYER @ 31-32'		BRITTLE				
										3			0
S-2		10%			SOFT	BLK	TO DK GREY MUDSTONE	BR	ISOLATION				
1100	35						MED F. BEDDING		CASING INSTALLED				
							W/LAM.		TO 39' BGS				
							-V. WEATHERED			21			0
	39												
	40												

* When rock coring, enter rock brokeness.

** Include monitor reading in 6 foot intervals @ borehole. Increase reading frequency if elevated reponse read.

Remarks: STARTED W/ ADVANCE 8" DRILL PIPE 0-10' BEGIN TO USE H_2O @ 10' DEEP WELL

Drilling Area Background (ppm): 0

Converted to Well: Yes ✓ No ____ Well I.D. #: 13MWT35

WELL NO.: 13MWT35

Tetra Tech NUS, Inc.

BEDROCK MONITORING WELL SHEET WELL INSTALLED IN BEDROCK

PROJECT: NSWC CRANE
LOCATION: CRANE, IN
PROJECT NO.: 9060
BORING: 13MWT35
DATE BEGUN: 10-28-03
DATE COMPLETED: 11-19-03
FIELD GEOLOGIST: M.G. COCHRAN
GROUND ELEVATION: 679.51
DATUM: NAVD 88

DRILLER: BOWSER MORNER
DRILLING METHOD: SONIC / A.R.
DEVELOPMENT METHOD: PUMP/BAILER SURGE

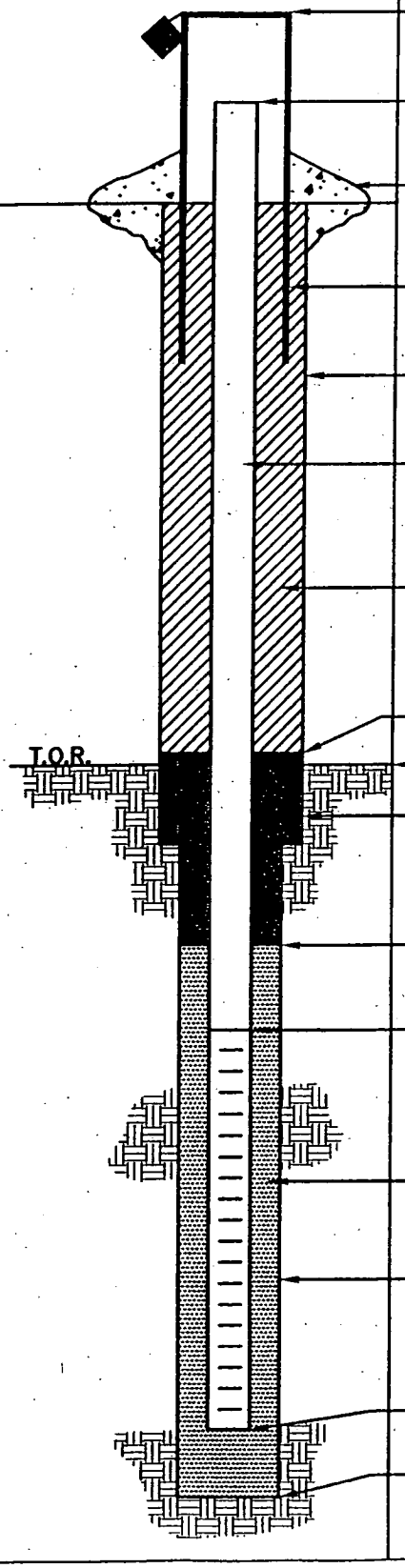

ELEVATION/HEIGHT OF TOP OF SURFACE CASING: 681.73/2.22

ELEVATION/HEIGHT TOP OF RISER: 681.73/2.22

TYPE OF SURFACE SEAL: CONCRETE

I.D. OF SURFACE CASING: 4" x 4" SQ

DIAMETER OF HOLE: 8 1/2 IN

RISER PIPE I.D.: 2"
TYPE OF RISER PIPE: PVC SCH 40

TYPE OF BACKFILL: CETCO VOLCLAY COARSE CHIPS

ELEVATION/DEPTH TOP OF SEAL: 676.51/3

ELEVATION/DEPTH TOP OF BEDROCK: 672.51/7

TYPE OF SEAL: CETCO VOLCLAY COARSE CHIPS

ELEVATION/DEPTH TOP OF SAND: 624.51/55

ELEVATION/DEPTH TOP OF SCREEN: 622.51/57
TYPE OF SCREEN: PVC SLOTTED
SLOT SIZE x LENGTH: .020 X 10'
I.D. SCREEN: 2"

TYPE OF SAND PACK: MED QTZ SAND

DIAMETER OF HOLE IN BEDROCK: 4"
CORE/REAM:

ELEVATION/DEPTH BOTTOM SCREEN: 612.51/67
ELEVATION/DEPTH BOTTOM OF SAND: 610.51/69
ELEVATION/DEPTH BOTTOM OF HOLE: 610.51/69
BACKFILL MATERIAL BELOW SAND: NA

ACAD:FORM_MWINBR.dwg 07/28/99 INL

Tetra Tech NUS, Inc.

BORING LOG

PROJECT NAME: Crane NSWC
PROJECT NUMBER: 90160
DRILLING COMPANY: BOWSER-MORNER
DRILLING RIG: CME 550 ATV

BORING No.: 13MWT35
DATE: 11-19-03
GEOLOGIST: M.G. COCHRAN
DRILLER: J. WALSH

Sample No. and Type or RQD	Depth (Ft.) or Run No.	Blows / 6" or RQD (%)	Sample Recovery / Sample Length	Lithology Change (Depth/Ft.) or Screened Interval	MATERIAL DESCRIPTION: Soil Density/ Consistency or Rock Hardness	Color	Material Classification	USCS *	Remarks	PID/FID Reading (ppm): Sample	Sampler BZ	Borehole**	Driller BZ**
	40												
				41	M HARD	LT GREY	SANDSTONE			0	0	0	0
					SOFT	LT GREY	SHALY SILTSTONE		V.F. LAMS, SLIGHT FISSLE, DAMP.				
C1									BROKEN, HOR. FRACS.				
9.5/		95%	10.0/										
10.0			10.0						VERT FRACS @ 45' + 46'				
									DRY ALONG FRAC FACES				
					SOFT	LT GREY	SILTSTONE		MORE BLOCKY THAN ABOVE				
	49												
									H2O IN HOR + VERT FRACS @ 51-53'				
C2													
9.0/		90%	10.0/		SOFT	LT GREY	SILTSTONE		LOCALIZED SHALY ZONES,	0	0	0	0
10.0			10.0						MOSTLY DAMP EXCEPT 51-53'				
									BLOCKY				
	59												
						DK GREY	SHALE		SATURATED, FISSLE, V. BR.				
				62.5									
						LT GREY	SANDSTONE		LOW ∠ FRACS THRU OUT				

* When rock coring, enter rock brokeness.

** Include monitor reading in 6 foot intervals @ borehole. Increase reading frequency if elevated reponse read.

Remarks:

Drilling Area Background (ppm): 0

Converted to Well: Yes ✓ No ____ Well I.D. #: 13MWT35

Tetra Tech NUS, Inc.

BORING LOG

PROJECT NAME: Crane NSWC
PROJECT NUMBER: 9060
DRILLING COMPANY: BOWSER MORNER
DRILLING RIG: CME 550

BORING No.: 13MWT35
DATE: 11-19-03
GEOLOGIST: M. G. COCHRAN
DRILLER: J. WALSH

Sample No. and Type or RQD	Depth (Ft.) or Run No.	Blows / 6" or RQD (%)	Sample Recovery / Sample Length	Lithology Change (Depth/Ft.) or Screened Interval	MATERIAL DESCRIPTION: Soil Density/ Consistency or Rock Hardness	Color	Material Classification	USCS*	Remarks	PID/FID Reading (ppm): Sample	Sampler BZ	Borehole**	Driller BZ**
C3									SATURATED TO 67; DRY	0	0	0	0
1.0/		10%	9.5/						67-69'				
10.0			10.0										
	69												
							TD 69.0'						

* When rock coring, enter rock brokeness.

** Include monitor reading in 6 foot intervals @ borehole. Increase reading frequency if elevated reponse read.

Drilling Area Background (ppm): 0

Remarks: 8" IN BTM OF HOLE @ 69' AFTER 1 HR STANDBY

Converted to Well: Yes ✓ No _____ Well I.D. #: 13MWT35

Tetra Tech NUS, Inc.

BORING LOG

PROJECT NAME: Crane NSWC
PROJECT NUMBER: 9060
DRILLING COMPANY: BOWSER-MORNER
DRILLING RIG: CME 550

BORING No.: 13MWT36
DATE: 11-5-03
GEOLOGIST: M.G. COCHRAN
DRILLER: J. WALSH

Sample No. and Type or RQD	Depth (Ft.) or Run No.	Blows / 6" or RQD (%)	Sample Recovery / Sample Length	Lithology Change (Depth/Ft.) or Screened Interval	MATERIAL DESCRIPTION: Soil Density/ Consistency or Rock Hardness	Color	Material Classification	USCS *	Remarks	PID/FID Reading (ppm): Sample	Sampler BZ	Borehole**	Driller BZ**
	0					BRN	SILT + CLAY		AMA NATURAL	–	–	0	0
									REFER TO LOG OF 13MWT37 FOR LITH. OF AREA				
	5												
						BRN	SHALE ?						
	10												
	15												
	20												
	25						TD 26.0'						

* When rock coring, enter rock brokeness.

** Include monitor reading in 6 foot intervals @ borehole. Increase reading frequency if elevated reponse read.

Drilling Area Background (ppm): 0

Remarks: 4 1/4" ID 8 1/2" OD HSA TO REFUSAL AT 8'. 4" ROLLER BIT W A.R FROM 8' TO TD. LOGGED HOLE W/ DRILL CUTTINGS

Converted to Well: Yes ✓ No _____ Well I.D. #: 13MWT36

WELL NO.: 13MWT36

Tetra Tech NUS, Inc.

BEDROCK MONITORING WELL SHEET WELL INSTALLED IN BEDROCK

PROJECT CRANE	LOCATION CRANE IN	DRILLER J. WALSH
PROJECT NO.	BORING 13MWT36	DRILLING METHOD HSA / A.R.
DATE BEGUN 11-5-03	DATE COMPLETED 11-5-03	
FIELD GEOLOGIST M.G. COCHRAN		DEVELOPMENT METHOD BAILER/ SURGE/PUMP
GROUND ELEVATION 664.91	DATUM NAVD 88	

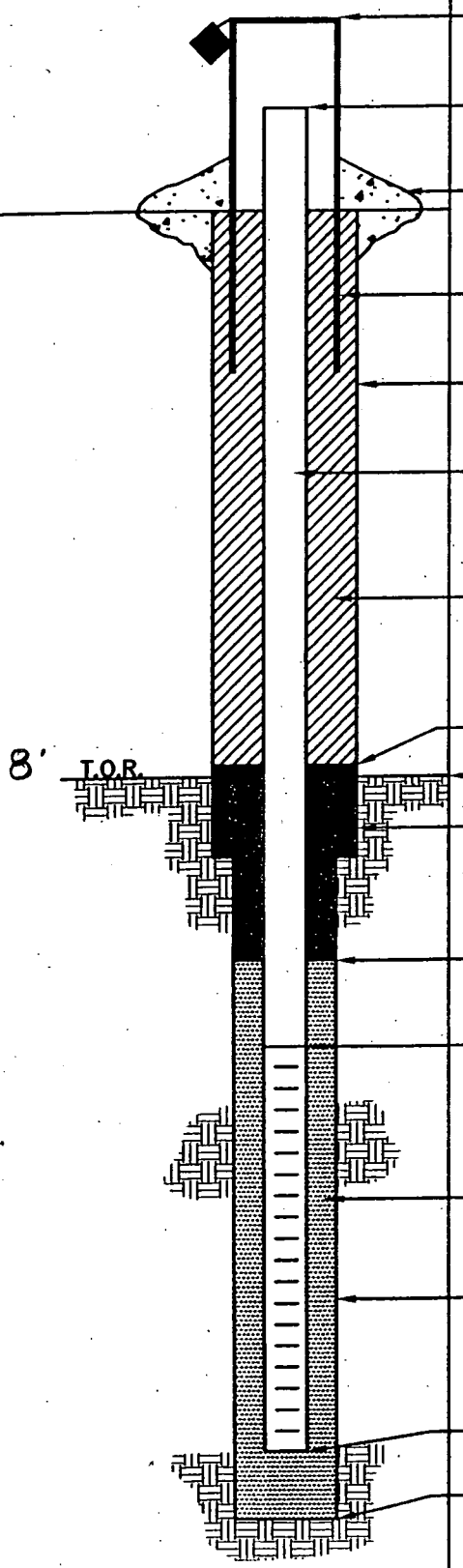

ELEVATION/HEIGHT OF TOP OF SURFACE CASING: 667.17/2.26

ELEVATION/HEIGHT TOP OF RISER: 667.21/2.3

TYPE OF SURFACE SEAL: CONCRETE

I.D. OF SURFACE CASING: 4"x4" SQ STEEL

DIAMETER OF HOLE: 8 1/2" TO 8'. 4" TO TD

RISER PIPE I.D.: 2"
TYPE OF RISER PIPE: PVC SCH 40

TYPE OF BACKFILL: BENTONITE CHIPS

ELEVATION/DEPTH TOP OF SEAL: 661.91/3

ELEVATION/DEPTH TOP OF BEDROCK: 656.91/8

TYPE OF SEAL: CETCO PURE GOLD BENTONITE CHIPS

ELEVATION/DEPTH TOP OF SAND: 651.91/13

ELEVATION/DEPTH TOP OF SCREEN: 649.91/15
TYPE OF SCREEN: PVC SCH 40
SLOT SIZE x LENGTH: .020 X 10'
I.D. SCREEN: 2"

TYPE OF SAND PACK: GLOBAL MEDIUM SAND

DIAMETER OF HOLE IN BEDROCK: 4"
CORE/REAM:

ELEVATION/DEPTH BOTTOM SCREEN: 639.91/25
ELEVATION/DEPTH BOTTOM OF SAND: 638.91/26
ELEVATION/DEPTH BOTTOM OF HOLE: 638.91/26
BACKFILL MATERIAL BELOW SAND:

ACAD:FORM_MWINBR.dwg 07/20/99 INL

WELL NO.: 13MWT37

Tetra Tech NUS, Inc.

BEDROCK MONITORING WELL SHEET WELL INSTALLED IN BEDROCK

PROJECT CRANE NSWC	LOCATION SWMU 13	DRILLER JON KEIFER
PROJECT NO. 9060	BORING 13MWT37	DRILLING METHOD ROTO-SONIC
DATE BEGUN 10-24-03	DATE COMPLETED 10-24-03	DEVELOPMENT METHOD BAILER/PUMP/SURGE
FIELD GEOLOGIST FRED W. RAMSER		
GROUND ELEVATION 659.96	DATUM NAVD 88	

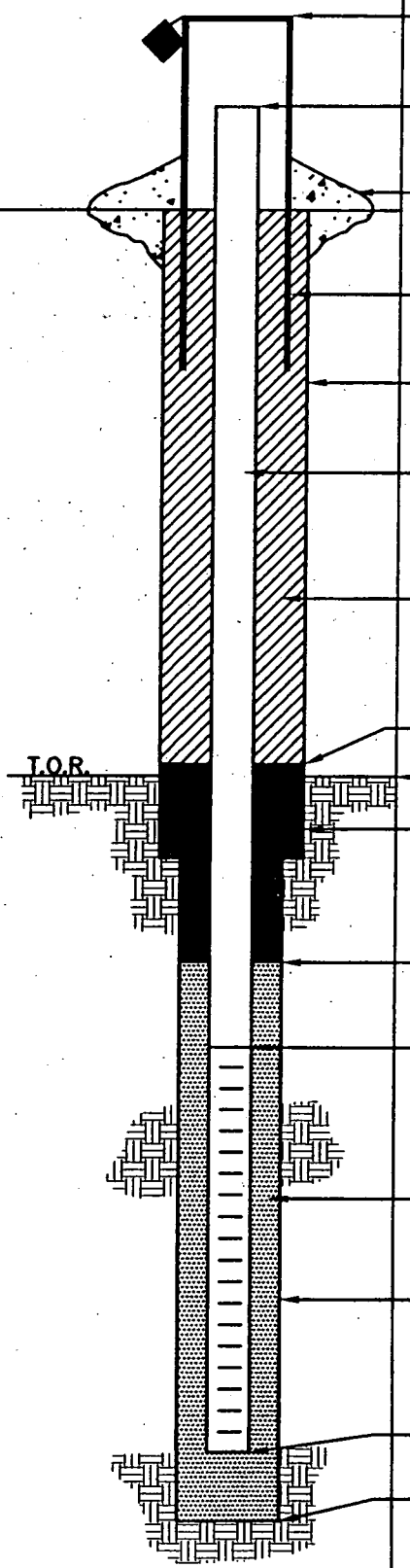

ELEVATION/HEIGHT OF TOP OF SURFACE CASING: 662.38/3.0

ELEVATION/HEIGHT TOP OF RISER: 662.29/2.5'

TYPE OF SURFACE SEAL: CONCRETE 4'x4'x6"

I.D. OF SURFACE CASING: 4"x4" SQ

DIAMETER OF HOLE: 8"

RISER PIPE I.D.: 2"

TYPE OF RISER PIPE: SCH 40 PVC 2" Ø

TYPE OF BACKFILL: CEMENT/BENTONITE GROUT

ELEVATION/DEPTH TOP OF SEAL: 651.46/8.5

ELEVATION/DEPTH TOP OF BEDROCK: 650.16 9.8'

TYPE OF SEAL: BENTONITE CHIPS CETCO PURE GOLD

ELEVATION/DEPTH TOP OF SAND: 648.46/11.5

ELEVATION/DEPTH TOP OF SCREEN: 645.46/14.5

TYPE OF SCREEN: PVC

SLOT SIZE x LENGTH: 0.02 x 10'

I.D. SCREEN: 2"

TYPE OF SAND PACK: QTZ SAND 10/30 SEP / 18B

DIAMETER OF HOLE IN BEDROCK: ~~4"~~ FWR ~5"

CORE/REAM: CORE

ELEVATION/DEPTH BOTTOM SCREEN: 635.46/24.5

ELEVATION/DEPTH BOTTOM OF SAND: 634.46/25.0

ELEVATION/DEPTH BOTTOM OF HOLE: 634.96/25.0

BACKFILL MATERIAL BELOW SAND:

ACAD:FORM_MWINBR.dwg 07/20/99 INL

Tetra Tech NUS, Inc.

BORING LOG

PROJECT NAME: Crane NSWC
PROJECT NUMBER: 9060
DRILLING COMPANY: BOWSER MORNER
DRILLING RIG: VERSA-SONIC

BORING No.: 13MWT37
DATE: 10-24-03
GEOLOGIST: FRED W. RAMSER
DRILLER: JON K

Sample No. and Type or RQD *	Depth (Ft.) or Run No.	Blows / 6" or RQD (%)	Sample Recovery / Sample Length	Lithology Change (Depth/Ft.) or Screened Interval	Soil Density/ Consistency or Rock Hardness	Color	Material Classification	USCS *	Remarks	PID/FID Reading (ppm) Sample	Sampler BZ	Borehole**	Driller BZ**
					MED	MED	YEL BRN SILT + SAND	SM	DRY				
1S 0910		NA			DENSE				TRACE SANDSTONE CLASTS	0			
						YEL BRN	SILT + SAND	SM	MOTTLING IRON STAINING				
	5		5/5				DEC. BEDROCK		LAYERING DRY	0			
2S 940		NA		TOP OF ROCK	SOFT	YEL BRN	SAND + SILT w/ ROCK FRAG.	VSM	WEATHERED BORK	0			
	10		4.5/5		MED STIFF	PALE GREY	CLAY		PLASTIC STRONGLY WEATHERED	0			
					HARD	VERY LIGHT GREY	SAND STONE 9.8'		FE STAIN LAYERING				
3S 0950	15	25%			MED HARD		SANDSTONE HOR + LOW ∆ FRACTURES IRON STAINED CROSS BEDDING + HOR. LAYERING	BR	RARE HIGH ∆ FRAC				
	20		7.5/10				VARIEGATED VERY PALE ORANGE TO DARK YELLOWISH ORANGE		COLOR ∆ OCCURS DOWNWARD DARKER/ ABUNDANT STAIN MAY BE INDICATION OF H_2O ~17'				
S4 1010		0/0			MED HARD		MOD YEL BRN SAND STONE HOR + LOW ∆ FRAC.	BR					
	25		2.5/5.0										

* When rock coring, enter rock brokeness.

** Include monitor reading in 6 foot intervals @ borehole. Increase reading frequency if elevated reponse read.

Drilling Area Background (ppm): —

Remarks: H_2O @ 11ft BGS 10-25-03

Converted to Well: Yes ✓ No _____ Well I.D. #: 13MWT37

WELL NO.: 13MWT38

Tetra Tech NUS, Inc.

BEDROCK MONITORING WELL SHEET WELL INSTALLED IN BEDROCK

PROJECT CRANE NSWC	LOCATION SWMU 13	DRILLER JON KEIFER
PROJECT NO. 9060	BORING 13MWT38	DRILLING METHOD ROTO-SONIC
DATE BEGUN 10-24-03	DATE COMPLETED 11-4-03	
FIELD GEOLOGIST FRED W. RAMSER		DEVELOPMENT METHOD BAILER/PUMP/SURGE
GROUND ELEVATION 659.03	DATUM NAVD 88	

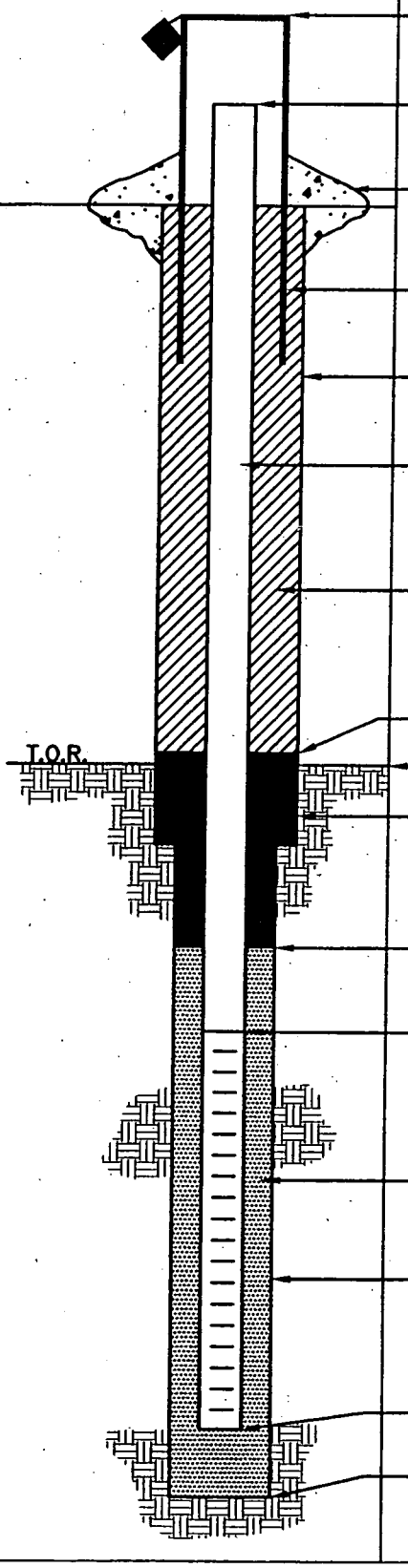

ELEVATION/HEIGHT OF TOP OF SURFACE CASING: 661.03/~3.0'

ELEVATION/HEIGHT TOP OF RISER: 661.04/~2.5'

TYPE OF SURFACE SEAL: 4' x 4' x 6" SQ CONCRETE PAD

I.D. OF SURFACE CASING: 4" x 4" SQ STEEL

DIAMETER OF HOLE: 11" DOWN TO 39'

ISOLATION CASING 6" DIA, DEPTH 39'

RISER PIPE I.D.: 2"

TYPE OF RISER PIPE: 2" PVC SCH. 40

TYPE OF BACKFILL: BENTONITE PURE GOLD CHIPS GEL CETCO

CEMENT/BENTONITE OUTSIDE OF ISO. CASING

ELEVATION/DEPTH TOP OF SEAL: 611.03/48'

ELEVATION/DEPTH TOP OF BEDROCK: 649.03/10'

TYPE OF SEAL: BENTONITE PURE GOLD CHIPS GEL CETCO

ELEVATION/DEPTH TOP OF SAND: 607.03/52

ELEVATION/DEPTH TOP OF SCREEN: 604.03/55

TYPE OF SCREEN: PVC SCH. 40

SLOT SIZE x LENGTH: .020 x 10'

I.D. SCREEN: 2"

TYPE OF SAND PACK: QTZ SAND 10/30 SEP 18/B

DIAMETER OF HOLE IN BEDROCK: 5" (BELOW ISO. CASING)

CORE/REAM: CORE

ELEVATION/DEPTH BOTTOM SCREEN: 594.03/65

ELEVATION/DEPTH BOTTOM OF SAND: 591.03/68

ELEVATION/DEPTH BOTTOM OF HOLE: 579.03/80

BACKFILL MATERIAL BELOW SAND: BENTONITE PURE GOLD CHIPS GEL CETCO

ACAD: FORM_MWINBR.dwg 07/28/99 INL

Tetra Tech NUS, Inc.

BORING LOG

PROJECT NAME: Crane NSWC
PROJECT NUMBER: 9060
DRILLING COMPANY: BOWSER, MORNER
DRILLING RIG: VERSA-SONIC

BORING No.: 13MWT38
DATE: 10-24-03 / 11-4-03
GEOLOGIST: FRED W. RAMSER
DRILLER: DENNIS SINK

Sample No. and Type or RQD	Depth (Ft.) or Run No.	Blows / 6" or RQD (%)	Sample Recovery / Sample Length	Lithology Change (Depth/Ft.) or Screened Interval	Soil Density/ Consistency or Rock Hardness	Color	Material Classification	USCS *	Remarks	PID/FID Reading (ppm) Sample	Sampler BZ	Borehole**	Driller BZ**
					MED HARD	YEL BRN	(PALE) SANDSTONE	V.BR	SEE LOG				
							IRON STAINING + LAYERING		13MWT37				
					MED	DK TO	SILTY SANDSTONE		FOR LITHO.				
					SOFT	MOD GREY	(25'-26' CLAY+SILT PLASTIC)		DESCRIPTION				
S1 1625	25	0%							OF 0'-25'				
					MED	LT	SANDSTONE						
	30		G 10		HARD	GREY							
					SOFT	DK	MUDSTONE W/	BR	DECOMPOSED				
						GREY	ROCK FRAGS +		ROCK, WET				
							COARSE SAND		-SLIGHTLY				
S-2			*				VERY		COHESIVE				
1640	35	30%					SOFT		STRONGLY WEATHERED				
									-MOIST				
					SOFT	GREYISH BLACK	MUDSTONE/						
							W ROCK FRAGS						
							VERY SOFT						
	40		9 10										
					SOFT	GREYISH BLUE	MUDSTONE		STARTED 11-4-03				
							V. THIN BEDDED TO	V.BR					
							-THINLY LAMINATED						
							-MOSTLY CLAY						
S3	45						STONE						

* When rock coring, enter rock brokeness.

** Include monitor reading in 6 foot intervals @ borehole. Increase reading frequency if elevated reponse read.

Drilling Area Background (ppm): 0

Remarks: INSTALLED ~6" ISOLATION CASING 10-25-03 1000 HRS TO 39' BGS

Converted to Well: Yes ✓ No _____ Well I.D. #: 13MWT38

RUN | RECOVERY | RQD

Tetra Tech NUS, Inc.

BORING LOG

PROJECT NAME: Crane NSWC
PROJECT NUMBER: 9060
DRILLING COMPANY: BOWSER MORNER
DRILLING RIG: VERSA-SONIC

BORING No.: 13MWT38
DATE: 11-4-03
GEOLOGIST: FRED W. RAMSER
DRILLER: JON KEIFER

Sample No. and Type or RQD	Depth (Ft.) or Run No.	Blows / 6" or RQD (%)	Sample Recovery / Sample Length	Lithology Change (Depth/Ft.) or Screened Interval	MATERIAL DESCRIPTION: Soil Density/ Consistency or Rock Hardness	Color	Material Classification	USCS *	Remarks	PID/FID Reading (ppm): Sample	Sampler BZ	Borehole**	Driller BZ**
					MED	DK	MUDSTONE	V.BR					
					SOFT	GRY	-THIN BEDDED						
						TO	TO V.THIN LAM.			10			
						BLK	-FINING DOWNWARD						
S6	75	0%											0
	80		10/10		HARD	GREY	SILT STONE	BR	CALCITE FILLED FUGS OCC FUGS/VOIDS				

* When rock coring, enter rock brokeness.

** Include monitor reading in 6 foot intervals @ borehole. Increase reading frequency if elevated reponse read.

Remarks:

Drilling Area Background (ppm): 0

Converted to Well: Yes ✓ No _____ Well I.D. #: 13MWT38

Tetra Tech NUS, Inc.

BORING LOG

PROJECT NAME: Crane NSWC
PROJECT NUMBER: 9060
DRILLING COMPANY: BOWSER MORNER
DRILLING RIG: VERSA-SONIC

BORING No.: 13MWT38
DATE: 11-4-03
GEOLOGIST: FRED W RAMSER
DRILLER: JON KEIFER

Sample No. and Type or RQD	Depth (Ft.) or Run No.	Blows / 6" or RQD (%)	Sample Recovery / Sample Length	Lithology Change (Depth/Ft.) or Screened Interval	MATERIAL DESCRIPTION: Soil Density/ Consistency or Rock Hardness	Color	Material Classification	USCS*	Remarks	PID/FID Reading (ppm): Sample	Sampler BZ	Borehole**	Driller BZ**
S-3		0%			SOFT	DK GREY/BLK	CLAY STONE	V.Br					
							LAM. TO THINLY LAM.			10			0
	50		10/10										
						BLK	CLAYSTONE	V.Br					
							- LAM. TO THINLY LAM.			12			
					MED HARD	LT GREY	SANDSTONE	Br					0
S-4	55	0%					- F grain						
							- THIN BEDDED TO THINLY LAM.			13			
							-						0
	60		7/10										
					MED HARD	LT GREY	SANDSTONE	Br					
							- F GRAIN		OCC VUGS				
							COARSENING DOWN WARD TO M. GRAIN			10			
							~63'		SCREEN				
S-5	65	90					- THIN BEDDED		55'-65'				
							TO LAM.		52-68				
							-OCC PLANT FOSSIL		49				0
					MED HARD	DK GREY	SILTSTONE	V.Br					
							-V.THIN BEDDED		68'				
	70		5/10				TO LAM.						

When rock coring, enter rock brokeness.
Include monitor reading in 6 foot intervals @ borehole. Increase reading frequency if elevated reponse read.

Drilling Area Background (ppm): 0

Remarks:

Converted to Well: Yes ✓ No _____ Well I.D. #: 13MWT38

WELL NO.: 13MWT39

Tetra Tech NUS, Inc.

BEDROCK MONITORING WELL SHEET WELL INSTALLED IN BEDROCK

PROJECT CRANE NSWC	LOCATION SWMU 13	DRILLER JON KEIFER
PROJECT NO. 9060	BORING 13MWT39	DRILLING METHOD ROTO SONIC
DATE BEGUN 11-4-03	DATE COMPLETED 11-4-03	
FIELD GEOLOGIST FRED W RAMSER		DEVELOPMENT METHOD BAILER/ PUMP/SURGE
GROUND ELEVATION 652.42	DATUM NAVD 88	

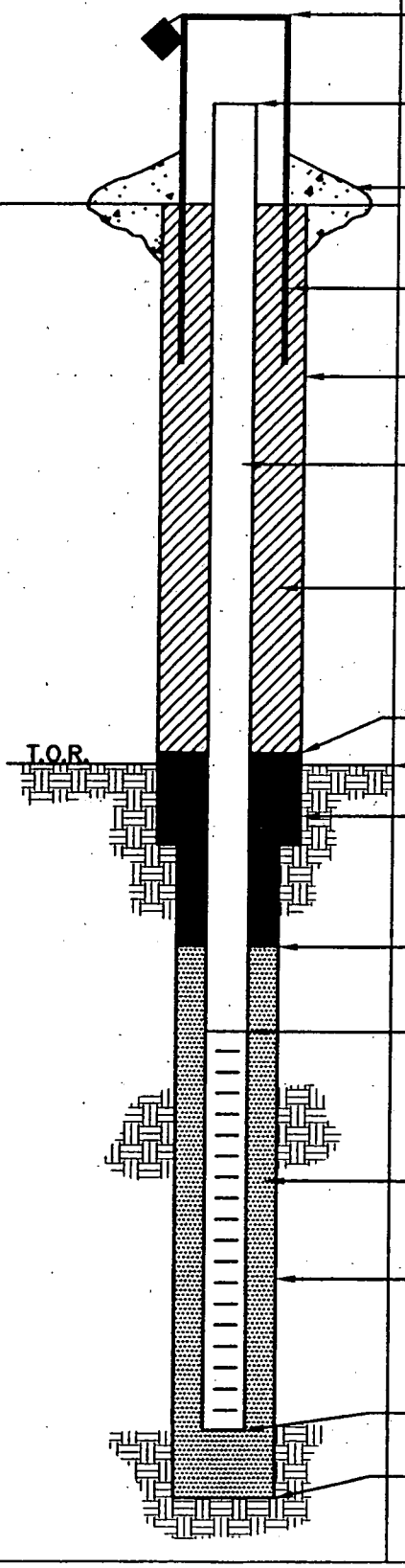

ELEVATION/HEIGHT OF TOP OF SURFACE CASING: 654.39/ ~3'

ELEVATION/HEIGHT TOP OF RISER: 654.44/ ~2.5'

TYPE OF SURFACE SEAL: 4' x 4' x 6" SQ CONCRETE PAD

I.D. OF SURFACE CASING: 4" x 4" SQ

DIAMETER OF HOLE: 8"

RISER PIPE I.D.: 2"

TYPE OF RISER PIPE: PVC SCH. 40

TYPE OF BACKFILL: BENTONITE CHIPS PUREGOLD CETCO GEL

ELEVATION/DEPTH TOP OF SEAL: 644.42/ 8

ELEVATION/DEPTH TOP OF BEDROCK: 649.42/ 3'

TYPE OF SEAL: BENTONITE CHIPS PUREGOLD CETCO GEL

ELEVATION/DEPTH TOP OF SAND: 641.42/ 11

ELEVATION/DEPTH TOP OF SCREEN: 638.42/ 14

TYPE OF SCREEN: PVC

SLOT SIZE x LENGTH: 0.020 x 10'

I.D. SCREEN: 2"

TYPE OF SAND PACK: QTZ SAND 10/30, SEP 18/B

DIAMETER OF HOLE IN BEDROCK: 5"

CORE/REAM: CORE

ELEVATION/DEPTH BOTTOM SCREEN: 628.42/ 24

ELEVATION/DEPTH BOTTOM OF SAND: 627.42/ 25

ELEVATION/DEPTH BOTTOM OF HOLE: 627.42/ 25

BACKFILL MATERIAL BELOW SAND: NONE

ACAD:FORM_MWINBR.dwg 07/20/99 INL

Tetra Tech NUS, Inc.

BORING LOG

PROJECT NAME: Crane NSWC
PROJECT NUMBER: 9060
DRILLING COMPANY: BOWSER MORNER
DRILLING RIG: VERSA-SONIC

BORING No.: 13MWT39
DATE: 11-4-03
GEOLOGIST: FRED W RAMSER
DRILLER: JON KEIFER

Sample No. and Type or RQD	Depth (Ft.) or Run No.	Blows / 6" or RQD (%)	Sample Recovery / Sample Length	Lithology Change (Depth/Ft.) or Screened Interval	Soil Density/ Consistency or Rock Hardness	Color	Material Classification	USCS *	Remarks	PID/FID Reading (ppm) Sample	Sampler BZ	Borehole**	Driller BZ**
						YEL	BRN SILT + CLAY W/ SAND						
				TOP OF BDRK									
	5												
S-1 1305		10%			MED SOFT	YEL	BRN SANDSTONE	V.BR					
							ABUN. Fe STAIN + LAM.						
							CROSS BEDDING LAM.						0
							OCC. VUG/VOIDS	BR		10			
	10		4/5				MED & FRAC (RARE)						
													0
S-2 1315	15	11%											
								V.BR					
										12			0
					SOFT	DK	GREY SILTSTONE	V.BR					
	20		6/10				MUDSTONE						
S-3 1355							SILTSTONE -ALT. BLK + GREY LAM.		SCREEN 14-24 SAND 11-25 BENTONITE				
		0%			SOFT	BLK	COAL BRITTLE						
	25		4/5.0							13			

* When rock coring, enter rock brokeness.
** Include monitor reading in 6 foot intervals @ borehole. Increase reading frequency if elevated reponse read.

Drilling Area Background (ppm): –

Remarks:

Converted to Well: Yes ✓ No _____ Well I.D. #: 13MWT39

15" / 1.1/10

WELL NO.: 13MWT40

Tetra Tech NUS, Inc.

BEDROCK MONITORING WELL SHEET WELL INSTALLED IN BEDROCK

PROJECT CRANE NSWC	LOCATION SWMU 13	DRILLER JON KEIFER
PROJECT NO. 9060	BORING 13MWT40	DRILLING METHOD ROTO-SONIC
DATE BEGUN 10-22-03	DATE COMPLETED 10-23-03	
FIELD GEOLOGIST FRED W. RAMSER		DEVELOPMENT METHOD BAILER/PUMP/SURGE
GROUND ELEVATION 664.93	DATUM NAVD 88	

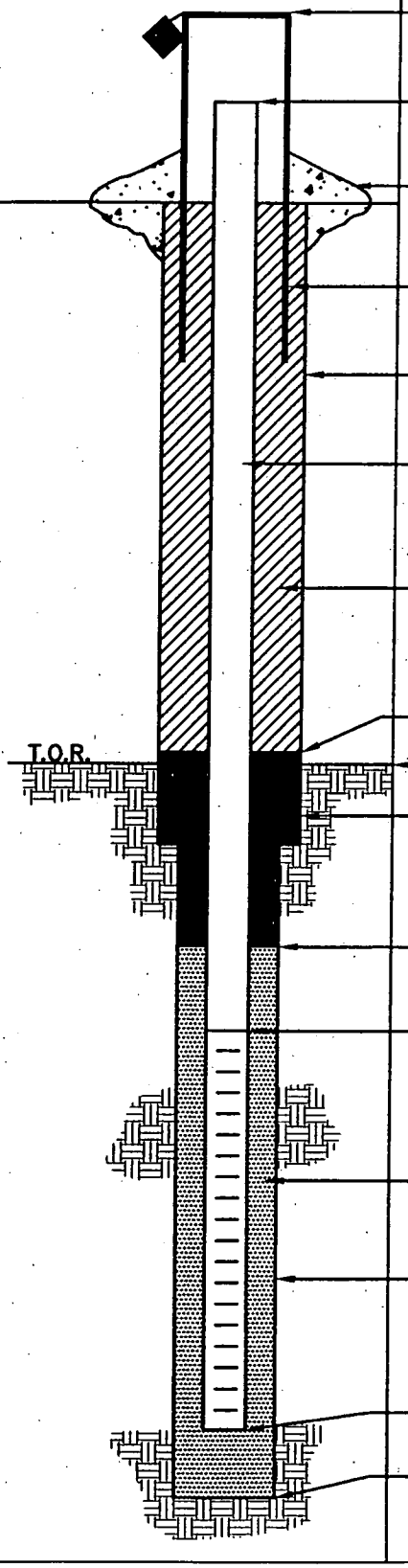

ELEVATION/HEIGHT OF TOP OF SURFACE CASING: 667.27/~3.0

ELEVATION/HEIGHT TOP OF RISER: 667.18/2.5

TYPE OF SURFACE SEAL: 4' x 4' x 6" CONCRETE

I.D. OF SURFACE CASING: 4" x 4" SQ

DIAMETER OF HOLE: 8"

RISER PIPE I.D.: 2"

TYPE OF RISER PIPE: SCH 40 PVC 2" Ø

TYPE OF BACKFILL: CEMENT/BENTONITE GROUT

ELEVATION/DEPTH TOP OF SEAL: 655.93/9'

ELEVATION/DEPTH TOP OF BEDROCK: 659.93/5'

TYPE OF SEAL: BENTONITE CHIPS CETCO PURE GOLD

ELEVATION/DEPTH TOP OF SAND: 652.93/12'

ELEVATION/DEPTH TOP OF SCREEN: 649.93/15'

TYPE OF SCREEN: PVC

SLOT SIZE x LENGTH: 0.02 x 10'

I.D. SCREEN: 2"

TYPE OF SAND PACK: QTZ SAND 10/30 SEP/18B

DIAMETER OF HOLE IN BEDROCK: ~~4"~~ 5"

CORE/REAM: CORE

ELEVATION/DEPTH BOTTOM SCREEN: 639.93/25

ELEVATION/DEPTH BOTTOM OF SAND: 639.43/25.5

ELEVATION/DEPTH BOTTOM OF HOLE: 639.43/25.5

BACKFILL MATERIAL BELOW SAND: NONE

ACAD:FORM_MWINBR.dwg 07/20/99 INL

Tetra Tech NUS, Inc.

BORING LOG

PROJECT NAME: Crane NSWC
PROJECT NUMBER: 9060
DRILLING COMPANY: BOWSER MORNER
DRILLING RIG: VERSA-SONIC

BORING No.: 13MWT40
DATE: 10-22-03 / 10-23-03
GEOLOGIST: FRED W RAMSER
DRILLER: JON KEIFER

Sample No. and Type or RQD	Depth (Ft.) or Run No.	Blows / 6" or RQD (%)	Sample Recovery / Sample Length	Lithology Change (Depth/Ft.) or Screened Interval	Soil Density/ Consistency or Rock Hardness	Color	Material Classification	USCS *	Remarks	PID/FID Reading (ppm) Sample	Sampler BZ	Borehole**	Driller BZ**
S-1 1615						MED BRN	SILT + SAND	SM	TOP SOIL				
							↓	↓					
			2.0 / 3.0			YEL BRN	WEATHERED SANDSTONE @ 2.5	SM					
S-2 1650	5	0%	2.0 / 2.0		SOFT		REDDISH BRN ↓	SM					
					↓	LT	YEL BRN WEATHERED SANDSTONE	↓	SOME IRON STAINING	15			
				BORK"	MED	VERY LT BRNISH GREY SANDSTONE		BR	MOTTLED				
					SOFT		IRON STAINING		CLAY LAYERC" @ 6.5'				0
S-3 0830		10%											
					MED SOFT	LT GREY	SILTY SANDSTONE	V.BR					
	10		3.5 / 5.0				- MED GREY		CLAY LAYERC" @ 9.5-10'	20			
							LAYERING		VERY SOFT				
							- CLAY PARTINGS + SILT						0
					↓		↓						
					MED	VERY LT BRNISH GREY		BR	CLAY LAYER				
S-4 0836	15	10%			SOFT		IRON STAINING		W/GRA.	15			
					MED		MOTTLED SAND STONE						
					HARD		ABUNDANT						0
							HOR. FRAC, TRACE LOW ∠ FRAC		H_2O @ 25'				
									@ 0855 HRS				
	20		8.5 / 10		↓		↓ ON BEDDING PLANE	↓	BELOW DRILL	3			
					MED		REDDISH ORANGE	BR	PLATFORM				
					HARD		SAND STONE		(PLATFORM IS				
S-5 0845		0%							3.5' AGS				0
									@ 0900 23.5'				
	25		3.5 / 5						@ 0906 23'				

* When rock coring, enter rock brokeness.

** Include monitor reading in 6 foot intervals @ borehole. Increase reading frequency if elevated reponse read.

Drilling Area Background (ppm): 0

Remarks: BEGIN W/ 4" CORE PIPE (DRY), INSTALLED 6" CASING (TEMP) TO 5' BGS

Converted to Well: Yes ✓ No _____ Well I.D. #: 13MWT40

WELL NO.: 13MWT41

Tetra Tech NUS, Inc.

BEDROCK MONITORING WELL SHEET WELL INSTALLED IN BEDROCK

PROJECT CRANE NSWC	LOCATION SWMU 13	DRILLER JON KEIFER
PROJECT NO. 9060	BORING 13MWT41	DRILLING METHOD ROTO SONIC
DATE BEGUN 10-23-03	DATE COMPLETED 11-10-03	
FIELD GEOLOGIST FRED W RAMSER		DEVELOPMENT METHOD BAILER / PUMP / SURGE
GROUND ELEVATION 663.65	DATUM NAVD 88	

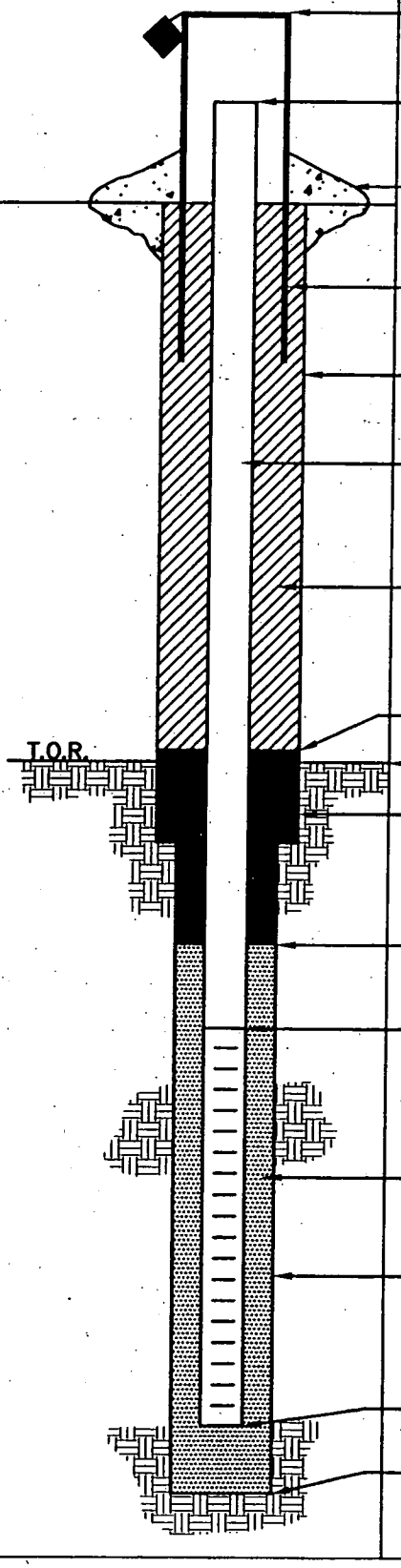

ELEVATION/HEIGHT OF TOP OF SURFACE CASING: 665.81 / 3.0

ELEVATION/HEIGHT TOP OF RISER: 665.67 / 2.5

TYPE OF SURFACE SEAL: CONCRETE 4' x 4' x 6"

I.D. OF SURFACE CASING: 4" x 4" SQ

DIAMETER OF HOLE: 11"

RISER PIPE I.D.: 2"

TYPE OF RISER PIPE: SCH. 40 PVC

TYPE OF BACKFILL: BENTONITE "PURE GOLD" CHIPS CETCO, 6" ISOLATION CASING INSTALLED USING CEMENT/BENTONITE GROUT TO 39.5'

ELEVATION/DEPTH TOP OF SEAL: 658.65 / 5'

ELEVATION/DEPTH TOP OF BEDROCK: 658.65 / 5'

TYPE OF SEAL: BENTONITE "PURE GOLD" CHIPS CETCO

ELEVATION/DEPTH TOP OF SAND: 611.65 / 52'

ELEVATION/DEPTH TOP OF SCREEN: 608.65 / 55'

TYPE OF SCREEN: PVC SCH. 40

SLOT SIZE x LENGTH: 0.02 x 10'

I.D. SCREEN: 2"

TYPE OF SAND PACK: QTZ SAND 10/30 SEP / 18 B

DIAMETER OF HOLE IN BEDROCK: 5"

CORE/REAM: CORE

ELEVATION/DEPTH BOTTOM SCREEN: 598.65 / 65'

ELEVATION/DEPTH BOTTOM OF SAND: 597.65 / 66'

ELEVATION/DEPTH BOTTOM OF HOLE: 597.65 / 66'

BACKFILL MATERIAL BELOW SAND: NONE

ACAD:FORM_MWINBR.dwg 07/28/99 INL

Tetra Tech NUS, Inc.

BORING LOG

PROJECT NAME: Crane NSWC
PROJECT NUMBER: 9060
DRILLING COMPANY: BOWSER MORNER
DRILLING RIG: VERSA-SONIC / CME 550

BORING No.: 13MWT41
DATE: 10-23-03
GEOLOGIST: FRED W RAMSER
DRILLER: JOHN KEIFER

Sample No. and Type or RQD	Depth (Ft.) or Run No.	Blows / 6" or RQD (%)	Sample Recovery / Sample Length	Lithology Change (Depth/Ft.) or Screened Interval	Soil Density/ Consistency or Rock Hardness	Color	Material Classification	USCS *	Remarks	PID/FID Reading (ppm) Sample	Sampler BZ	Borehole**	Driller BZ**
					MED HARD	YEL BRN	SANDSTONE	BR	SEE LOG	10			
		50%					LOW ∆ FRACS IRON STAINING LAYERING		FOR 13MWT40				
S-1 1345									FOR LITHO.	98			
		0%			MED SOFT	VERY LITH GREY	SILTY SANDSTONE	V.BR	DESCRIPTION				
	30		4.5/5						0' TO 25'	125			
					SOFT		LIGHT GREY SILT + SAND	V.BR	BGS.				
							GRADING TO CLAY + SILT @ ~32'			5			
									COHESIVE,				
						DARK GREY	CLAY + SILT	V.BR	PLASTIC				
S-2 1435	35						DECOMPOSED		W/TR SHALE				
		0%					MUD STONE?		PARTINGS	92			
									INSTALLED				
			6.0/10						6" CASING TO				
									38'				
C1		86%	9.0		SOFT	DK GREY	SHALE		BROKEN, DAMP,	0	0	0	0
			10.0						DRILL RATE 1'-				
									@ 8 MIN.				
									HOR BED				
									PLANE FRACS				
	50								THRU CORE				

* When rock coring, enter rock brokeness.

** Include monitor reading in 6 foot intervals @ borehole. Increase reading frequency if elevated reponse read.

Drilling Area Background (ppm): 0

Remarks: DRILL TO 25' WITH 8" DRILL PIPE, SET UP TO CORE @ 38' W ATV ON 11-4-04. REAMED OUT PLUG IN LOWER 10' OF HOLE PRIOR TO CORING, START CORING @ 40'

Converted to Well: Yes ✓ No _____ Well I.D. #: 13MW T41

Tetra Tech NUS, Inc.

BORING LOG

PROJECT NAME: Crane NSWC
PROJECT NUMBER: 9060
DRILLING COMPANY: RONSER-MORNER
DRILLING RIG: CME 550 ATV

BORING No.: 13 MWT 41
DATE: 11-4-03
GEOLOGIST: M. G. COCHRAN
DRILLER: J. WALSH

Sample No. and Type or RQD	Depth (Ft.) or Run No.	Blows / 6" or RQD (%)	Sample Recovery / Sample Length	Lithology Change (Depth/Ft.) or Screened Interval	Soil Density/ Consistency or Rock Hardness	Color	Material Classification	USCS *	Remarks	PID/FID Reading (ppm) Sample	Sampler BZ	Borehole**	Driller BZ**
	50												
					SOFT	DK GREY	SHALE		DAMP, THIN LAMINATED, DRILL RATE 5 MIN/FT, BROKEN				
C 2		94%	10'	55.1						0	0	0	0
			10'		M. HARD	LT GREY	SANDSTONE		LOW & FRACS @ 1' INTERVALS, MOIST ALONG FRACS & IN PORES, FE STAINED IN FRACS + GREY LAMINATIONS @ LOW ∠S IN CORE, ~5MM THICK				
	60				M. HARD	LT. GREY	SANDSTONE	BR					
S-3		39%					PLANT FOSILS, BLK LAMINATIONS, ~~V. FINE BEDDING~~, LO ∠ FRACS		IRREGULAR BEDDING				
	65				M. SOFT	LT GRY	SILTY SANDSTONE	V. BR					
	66		2.5 / 6.0										
							PLACE SCREEN @ 55 TO 65						

* When rock coring, enter rock brokeness.

** Include monitor reading in 6 foot intervals @ borehole. Increase reading frequency if elevated reponse read.

Drilling Area

Remarks: STOPPED @ 60' ON 11-4-03. RESUMED DRILLING ON 11-5-03. LOST BIT @ 60'. WILL OVERDRILL W/ ROTASONIC RETRIEVED BIT W/ 4" SOIL BIT USING ROTO SONIC RIG

Background (ppm): 0

Converted to Well: Yes ✓ No _____ Well I.D. #: 13 MWT41

WELL NO.: 13MWT42

Tetra Tech NUS, Inc.

BEDROCK MONITORING WELL SHEET WELL INSTALLED IN BEDROCK

PROJECT CRANE NSWC	LOCATION SWMU 13	DRILLER JON KEIFER
PROJECT NO. 9060	BORING 13MWT42	DRILLING METHOD ROTO-SONIC
DATE BEGUN 10-22-03	DATE COMPLETED 10-22-03	
FIELD GEOLOGIST FRED W RAMSER		DEVELOPMENT METHOD BAILER/PUMP SURGE
GROUND ELEVATION 668.05	DATUM NAVD 88	

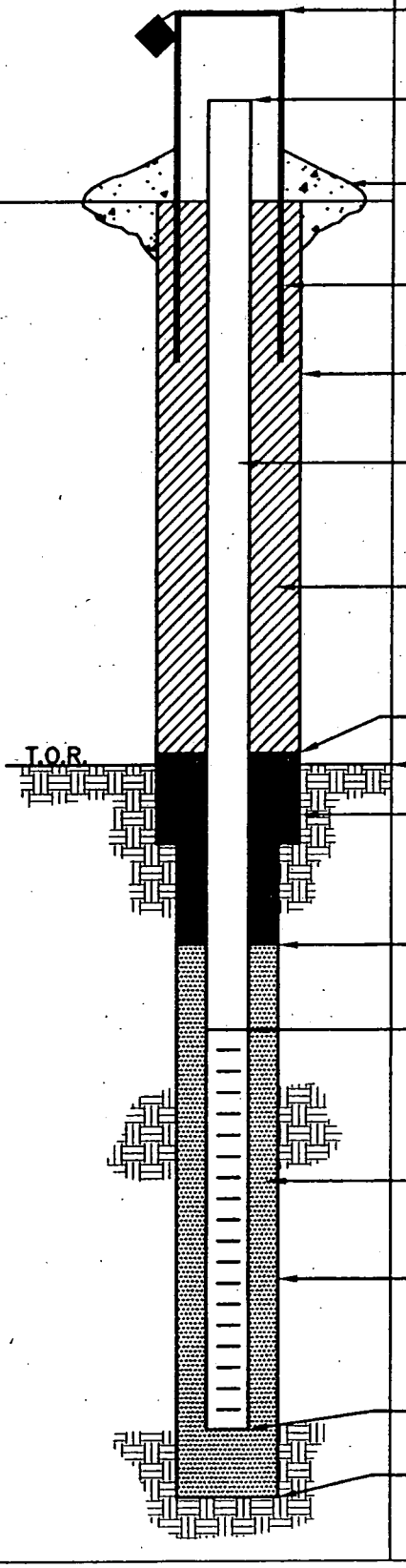

ELEVATION/HEIGHT OF TOP OF SURFACE CASING: 670.35/ 2.3

ELEVATION/HEIGHT TOP OF RISER: 670.31/ 2.26

TYPE OF SURFACE SEAL: CONCRETE 4' x 4' x 6"

I.D. OF SURFACE CASING: 4" x 4"

DIAMETER OF HOLE: 8"

RISER PIPE I.D.: 2"

TYPE OF RISER PIPE: SCH. 40 PVC 2" Ø

TYPE OF BACKFILL: CEMENT/BENTONITE GROUT

ELEVATION/DEPTH TOP OF SEAL: 662.05/ 6'

ELEVATION/DEPTH TOP OF BEDROCK: 658.05/10'

TYPE OF SEAL: BENTONITE CHIPS CETCO PURE GOLD

ELEVATION/DEPTH TOP OF SAND: 659.05/ 9'

ELEVATION/DEPTH TOP OF SCREEN: 657.05/ 11'

TYPE OF SCREEN: PVC

SLOT SIZE x LENGTH: 0.02 x 10'

I.D. SCREEN: 2"

TYPE OF SAND PACK: QTZ SAND 10/30 SEP/18B

DIAMETER OF HOLE IN BEDROCK: ~~4.5~~ 5"

CORE/REAM: CORE

ELEVATION/DEPTH BOTTOM SCREEN: 647.05/21'

ELEVATION/DEPTH BOTTOM OF SAND: 643.05/25

ELEVATION/DEPTH BOTTOM OF HOLE: 643.05/25

BACKFILL MATERIAL BELOW SAND: NONE

ACAD: FORM_MWINBR.dwg 07/20/99 INL

Tetra Tech NUS, Inc.

BORING LOG

PROJECT NAME: Crane NSWC
PROJECT NUMBER: 9060
DRILLING COMPANY: BOWSER MORNER
DRILLING RIG: VERSA-SONIC

BORING No.: 13MWT42
DATE: 10-22-03
GEOLOGIST: FRED W. RAMSER
DRILLER: JON KEIFER

Sample No. and Type or RQD	Depth (Ft.) or Run No.	Blows / 6" or RQD (%)	Sample Recovery / Sample Length	Lithology Change (Depth/Ft.) or Screened Interval	Soil Density/ Consistency or Rock Hardness	Color	Material Classification	USCS*	Remarks	PID/FID Reading (ppm) Sample	Sampler BZ	Borehole**	Driller BZ**
					MED		MED BRN	SC					
	2				DENSE		SILT + F.g SAND	SC/SM	Fe STAINING				
1S							TR CLAY	SM	MOIST	2.6			
1015 HR	4				SOFT	YEL	WEATHERED						
	5		5.0 / 5.0			BRN	S.S.		MOTTLED GREY	3.5			
					SOFT	YEL	WEATHERED S.S		RQD NOT	10			
		0%				BRN	W/GRAY LAYERING		RELIABLE				
2S							LESS WEATHERING		DRILLING W/				
1025			4.0 / 4.0		MED SOFT		TO 10'		ROTOSONIC	21			
1030 3S	10	0%	2.0 / 2.0				V.BR 5'-10'	V.BR	DESTROYS SAMPLE				
						LT			CORE. MOIST @				
					MED	YEL	SAND STONE Br	Br	10' NO H_2O	2.1			
					HARD	BRN	IRON STAINING/		IN HOLE @ 1045 HRS				
						+ GREY	LAYERING		MOTTLING				
	15								HOR FRACTURES	3.0			
3S 1443									* H_2O @ 22'.9" @ 1508				
									* H_2O @ 22' 4" @ 1516				
		20%							* H_2O @ 22' 3"	3.0			
	20		8.5 / 10						@ 1524				
					MED	DK	GREY SILT STONE	V.BR	BLK MOTTLED	0.0			
5-4 1500		0%			SOFT		V.BR		SAND 25'-9'				
									SCREEN 21'-11'				
	25		3.5 / 5				TD @ 25'		BENT 6'-9'				

* When rock coring, enter rock brokeness.

** Include monitor reading in 6 foot intervals @ borehole. Increase reading frequency if elevated reponse read.

Drilling Area Background (ppm): —

Remarks: USE-4' CASING TO ADVANCE HOLE FOR 2" PVC WELL
INSTALLED TEMP 6" CASING 0-10' BGS
START TO TO USE H_2O TO DRILL @ 10' @ 1430 HRS

Converted to Well: Yes ✓ No _____ Well I.D. #: 13MWT42

* MEASURED FROM TOP OF RIG PLATFORM (3' ABOVE GROUND SURFACE)
4" CORE PIPE ⇒ 5" HOLE 10' TO 25' 6" CASING ⇒ 7½ HOLE 0'-10'

WELL NO.: 13MWT43

Tetra Tech NUS, Inc.

BEDROCK MONITORING WELL SHEET WELL INSTALLED IN BEDROCK

PROJECT CRANE NSWC	LOCATION SWMU 13	DRILLER JON KEIFER
PROJECT NO. 9060	BORING 13MWT43	DRILLING METHOD ROTO-SONIC
DATE BEGUN 11-6-03	DATE COMPLETED 11-6-03	
FIELD GEOLOGIST FRED W. RAMSER		DEVELOPMENT METHOD BAILER/ PUMP/ SURGE
GROUND ELEVATION 688.88	DATUM NAVD 88	

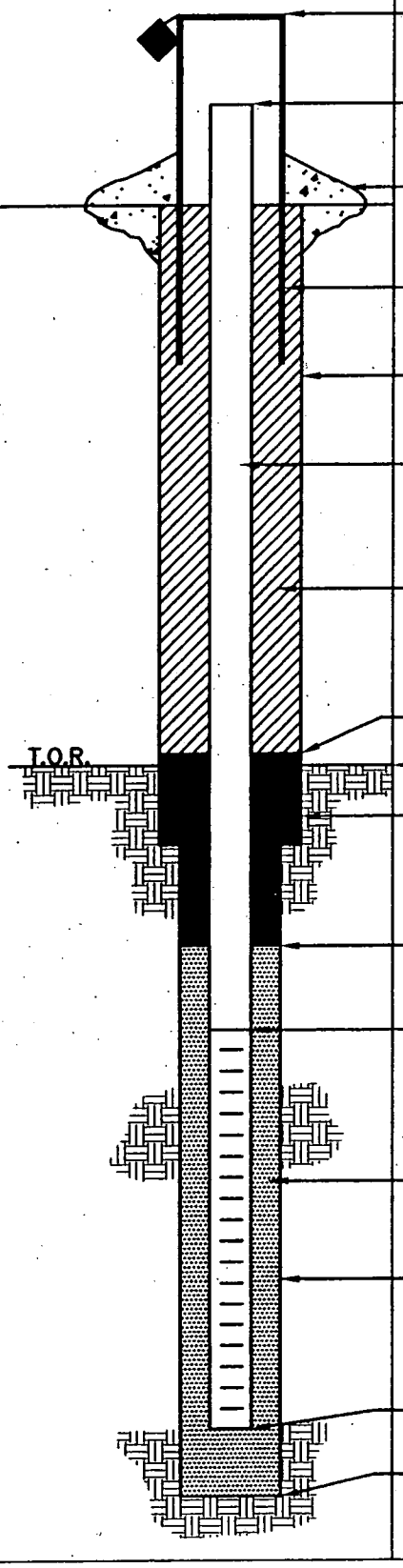

ELEVATION/HEIGHT OF TOP OF SURFACE CASING: 690.96/~3'

ELEVATION/HEIGHT TOP OF RISER: 690.90/-25'

TYPE OF SURFACE SEAL: 4'x4'x6" CONCRETE PAD

I.D. OF SURFACE CASING: 4" x 4" SQ

DIAMETER OF HOLE: 8"

RISER PIPE I.D.: 2"
TYPE OF RISER PIPE: SCH.40 PVC

TYPE OF BACKFILL: BENTONITE PURE GOLD CETCO GEL

ELEVATION/DEPTH TOP OF SEAL: 683.88/ 5'

ELEVATION/DEPTH TOP OF BEDROCK: 678.88 / 10'

TYPE OF SEAL: BENTONITE PURE GOLD GEL CETCO

ELEVATION/DEPTH TOP OF SAND: 681.88/ 7'

ELEVATION/DEPTH TOP OF SCREEN: 678.88/10'
TYPE OF SCREEN: PVC
SLOT SIZE x LENGTH: 0.02 x10'
I.D. SCREEN: 2"

TYPE OF SAND PACK: QTZ SAND 10/30 SEP/18B

DIAMETER OF HOLE IN BEDROCK: ~5"
CORE/REAM: CORE

ELEVATION/DEPTH BOTTOM SCREEN: 668.88/ 20'
ELEVATION/DEPTH BOTTOM OF SAND: 667.88/ 21'
ELEVATION/DEPTH BOTTOM OF HOLE: 667.88/ 21'
BACKFILL MATERIAL BELOW SAND: NONE

ACAD:FORM_MWINBR.dwg 07/20/99 INL

Tetra Tech NUS, Inc.

BORING LOG

PROJECT NAME: Crane NSWC
PROJECT NUMBER: 9060
DRILLING COMPANY: BOWSER MORNER
DRILLING RIG: VERSA-SONIC

BORING No.: 13MWT43
DATE: 11-06-03
GEOLOGIST: FRED WRAMSER
DRILLER: JON KEIFER

Sample No. and Type or RQD	Depth (Ft.) or Run No.	Blows / 6" or RQD (%)	Sample Recovery / Sample Length	Lithology Change (Depth/Ft.) or Screened Interval	Soil Density/ Consistency or Rock Hardness	Color	Material Classification	USCS*	Remarks	PID/FID Reading (ppm) Sample	Sampler BZ	Borehole**	Driller BZ**
						DK BRN	SILT + CLAY		TOP SOIL				
							YEL BRN						
							CLAY + SILT		LOG CUTTINGS				
							f-g SAND						
	5						MOTTLED			3.0			
							GREY						
				7			SILTY f-g SAND						0
							RELIC LAM.		DEC. BRK				
							LIGHT YEL BRN			8			
	10						GREY						
					MED SOFT	YEL	SAND STONE		WL=22' BTC				
					SOFT	BRN	DK GREY MUD		@ 1435 HRS				
							STONE		WL=21' 8" @				0
					SOFT	DK GREY	SILT STONE	BT	1445				
20%	15						- LAM. LGT GREY BLK		WL=21' 6" @				
							- IRREGULAR LAM.		1448				
							-		WL=21' 4" @	10			
									1452				
									1500, WL=21' 0"				
	20		8.5/10						MAKING H_2O				
									DECIDED TO				
							SCREEN 10-20		INSTALL WELL				
							SAND 7-21		10'-20'				
							BENT. 2-7						
	25												

* When rock coring, enter rock brokeness.

** Include monitor reading in 6 foot intervals @ borehole. Increase reading frequency if elevated reponse read.

Drilling Area Background (ppm): —

Remarks:

Converted to Well: Yes ✓ No _____ Well I.D. #: 13MWT43

WELL NO.: 13MWT44

Tetra Tech NUS, Inc.

BEDROCK MONITORING WELL SHEET WELL INSTALLED IN BEDROCK

PROJECT CRANE NSWC	LOCATION CRANE IN	DRILLER J WALSH
PROJECT NO. 9060	BORING 13MWT44	DRILLING METHOD A.R.
DATE BEGUN 11-6-03	DATE COMPLETED 11-10-03	
FIELD GEOLOGIST M.G. COCHRAN		DEVELOPMENT METHOD BAILER/PUMP SURGE
GROUND ELEVATION 682.11	DATUM NAVD 88	

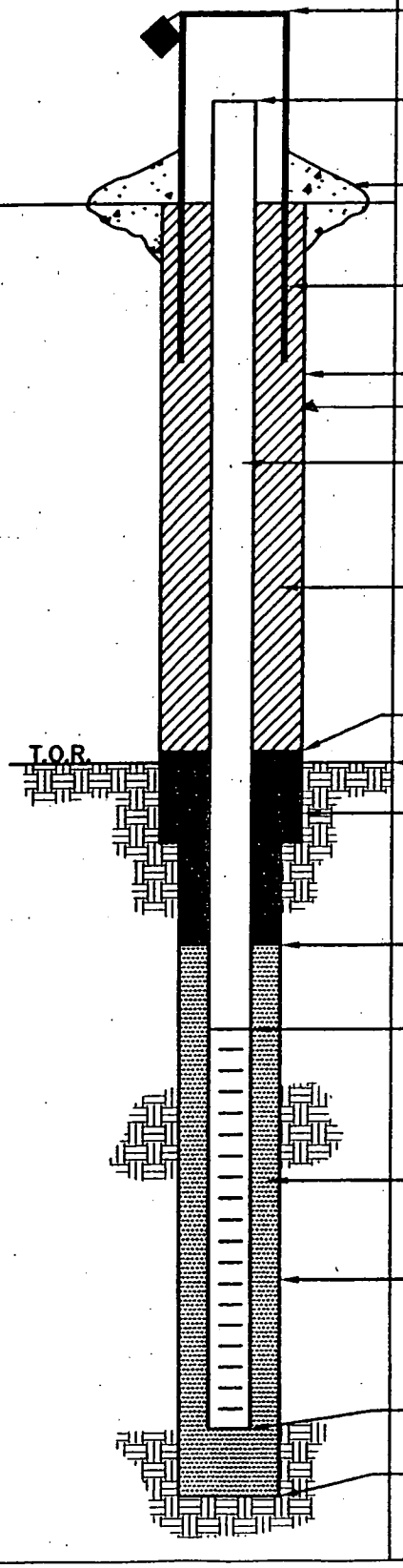

ELEVATION/HEIGHT OF TOP OF SURFACE CASING: 684.06/1.95

ELEVATION/HEIGHT TOP OF RISER: 683.82/1.71

TYPE OF SURFACE SEAL: CONCRETE

I.D. OF SURFACE CASING: 4" x 4" SQ STEEL

DIAMETER OF HOLE: 11" TO 40', 5 7/8" TO TD,
6" DIA ISOLATION CASING TO 40'

RISER PIPE I.D.: 2"
TYPE OF RISER PIPE: PVC SCHEDULE 40

TYPE OF BACKFILL: PURE GOLD MEDIUM BENTONITE CHIPS

ELEVATION/DEPTH TOP OF SEAL: 679.11 / 3'

ELEVATION/DEPTH TOP OF BEDROCK: 670.11 / 12'

TYPE OF SEAL: PURE GOLD MEDIUM BENTONITE CHIPS

ELEVATION/DEPTH TOP OF SAND: 612.11 / 70

ELEVATION/DEPTH TOP OF SCREEN: 609.11 / 73
TYPE OF SCREEN: PVC SLOTTED
SLOT SIZE x LENGTH: .020 X 10'
I.D. SCREEN: 2"

TYPE OF SAND PACK: GLOBAL MEDIUM SAND

DIAMETER OF HOLE IN BEDROCK: 5 7/8"
CORE/REAM: 3" / 5 7/8"

ELEVATION/DEPTH BOTTOM SCREEN: 599.11 / 83
ELEVATION/DEPTH BOTTOM OF SAND: 599.11 / 83
ELEVATION/DEPTH BOTTOM OF HOLE: 594.11 / 88
BACKFILL MATERIAL BELOW SAND: PURE GOLD MEDIUM BENTONITE CHIPS

ACAD:FORM_MWINBR.dwg 07/20/99 INL

Tetra Tech NUS, Inc.

BORING LOG

PROJECT NAME: Crane NSWC
PROJECT NUMBER: 9060
DRILLING COMPANY: BOWSER MORNER
DRILLING RIG: VERSA-SONIC

BORING No.: 13MWT44
DATE: 11-6-03
GEOLOGIST: FRED W RAMSER
DRILLER: JON KEIFER

Sample No. and Type or RQD	Depth (Ft.) or Run No.	Blows / 6" or RQD (%)	Sample Recovery / Sample Length	Lithology Change (Depth/Ft.) or Screened Interval	Soil Density/ Consistency or Rock Hardness	Color	Material Classification	USCS *	Remarks	PID/FID Reading (ppm) Sample	Sampler BZ	Borehole**	Driller BZ**
					STIFF	MED BRN	SILT + CLAY	CL	MOIST				
							SILT CONTENT INC. DOWNWARD						
							- MOTTLED						
S-1	5						BRN		MOIST			0	
0900					MED DENSE	YEL	SILT + CLAY +	SM/SC	DEC. BDRK				
						BRN	f-g SAND		MOTTLED	10			
									YEL BRN + GREY				
						LT.	YEL BRN + GREY		LAM. STRONGLY				
	10		10/10				f-g SAND w/SOME SILT	SM	WEATHERED				
							MUD STONE		BDRK				
							- STRONGLY WEATHERED		VERY SOFT UNCONSOLIDATED				
				TOP OF BDRK	SOFT	YEL	SAND STONE	BR					
						BRN	- ABUNDANT Fe STAIN - THINLY BEDDED						
	15	15%				+ GREY	- INTERLAYERED			8		0	
S-2							W/STRONGLY WEATH.						
							SILT + CLAY STONE						
							-S.S. MOD						
							WEATHERED						
	20		8/10				SAND STONE LESS WEATHERED						
					MED HARD		@20'						
					SOFT		INTERLAYERED MUDSTONE	YBr					
							AND SAND STONE		MUDSTONE = DK GREY	10			
S-3							V. THINLY BEDDED + LAM.		SANDSTONE = LT GREY				
	25	20%										0	

* When rock coring, enter rock brokeness.

** Include monitor reading in 6 foot intervals @ borehole. Increase reading frequency if elevated reponse read.

Drilling Area Background (ppm): 0.0

Remarks: INSTALLED 6" ISOLATION CASING TO 40' BGS USING 11" DRILLPIPE.

Converted to Well: Yes ✓ No _____ Well I.D. #: _____

Tetra Tech NUS, Inc.

BORING LOG

PROJECT NAME: Crane NSWC
PROJECT NUMBER: 9060
DRILLING COMPANY: BOWSER MORNER
DRILLING RIG: VERSA-SONIC

BORING No.: 13MWT44
DATE: 11-6-03
GEOLOGIST: FRED W. RAMSER
DRILLER: JON KEIFER

Sample No. and Type or RQD	Depth (Ft.) or Run No.	Blows / 6" or RQD (%)	Sample Recovery / Sample Length	Lithology Change (Depth/Ft.) or Screened Interval	Soil Density/ Consistency or Rock Hardness	Color	Material Classification	USCS *	Remarks	PID/FID Reading (ppm) Sample	Sampler BZ	Borehole**	Driller BZ**
						MOD GREY	SANDSTONE	BR					
							ABUNDANT FE STAIN						
					SOFT	DK GREY	INTERLAYERED	VFR	M. STONE DK GREY S. STONE LT GREY				
							MUD STONE AND SANDSTONE						
	30		9/10										
												0	
					MED HARD	MOD GREY	SANDSTONE	BR					
							THINLY BEDDED W/ BLK LAM.			10			
	35		5/10				OCC VUGS						
										5		0	
	40		6/10										
					SOFT	DK GREY	SHALE		FISSILE SMALL H_2O ON TOP OTHERWISE DRY				
									CORE RATE 3 MIN/FOOT. BLOCKY				
C-1		95%	10/							0	0	0	0
9.5/			10	46									
10					M. HARD	LT GREY	SILTSTONE		V.F. LAMS, STREAK IN WHITE. DRY CORE RATE 5 MIN/FOOT. BLOCKY				
	50												

* When rock coring, enter rock brokeness.

** Include monitor reading in 6 foot intervals @ borehole. Increase reading frequency if elevated reponse read.

Drilling Area Background (ppm): 0.0

Remarks: SET UP ON HOLE ON 11-10-03 TO DRILL THROUGH CASING W ATV RIG STARTING @ 40'

Converted to Well: Yes ✓ No _____ Well I.D. #: _____

Tetra Tech NUS, Inc.

BORING LOG

PROJECT NAME: Crane NSWC
PROJECT NUMBER: 9060
DRILLING COMPANY: BOWSER MORNER
DRILLING RIG: CME 550 ATV

BORING No.: 13MWT44
DATE: 11-10-03
GEOLOGIST: M.G. COCHRAN
DRILLER: J. WALSH

Sample No. and Type or RQD	Depth (Ft.) or Run No.	Blows / 6" or RQD (%)	Sample Recovery / Sample Length	Lithology Change (Depth/Ft.) or Screened Interval	MATERIAL DESCRIPTION: Soil Density/ Consistency or Rock Hardness	Color	Material Classification	USCS *	Remarks	PID/FID Reading (ppm): Sample	Sampler BZ	Borehole**	Driller BZ**
	50												
					M HARD	LT GREY	SILTSTONE		CORE 3 MIN/FT				
									V. F. LAMS.				
									STREAKS IN WHITE				
									DRY, HOR BEDDING				
									BECOMING SHALY				
									BLOCKY	0	0	0	0
C2													
9.5/		95%	10/	57					LOOKS MOIST @ 57'				
10.0			10		SOFT	LT GREY	SHALE		DRY. V.F LAMS WHITE STREAK,				
									HOR BEDDING				
	60								BLOCKY				
				61									
				62	M HARD	LT GREY	SANDSTONE		1 LOW & FRAC @ 61.5.				
					SOFT	BL	SHALE		DRY				
C3			8/										
7.4		94%	10						CORE SLIPPED OUT OF BARREL PER DRILLER	0	0	0	0
10.0				65.5					BLOCKY				
					M HARD	LT GREY	SILTSTONE						
									DRY, GRADES				
									INTO SS AT BTM.				
	70			70.									
					SOFT	GREY	SHALY SILTSTONE		V. BROKEN, FRACS THRU				
									OUT. SLIGHT MOISTURE				
C4									THRU OUT. MOST FRACS ARE				
0/		0%	8/						HOR, FEW VERT FOSSILIFEROUS	0	0	0	0
8			8										

* When rock coring, enter rock brokeness.

** Include monitor reading in 6 foot intervals @ borehole. Increase reading frequency if elevated reponse read.

Drilling Area Background (ppm): 0

Remarks: WAITED AFTER 70' FOR H2O. NO H2O IN HOLE AFTER 1 HR
H2O LEVEL @ 64' B.G.S. IN INSTALLED WELL ON 11-11-03

Converted to Well: Yes ✓ No _____ Well I.D. #: 13MWT44

Tetra Tech NUS, Inc.

BORING LOG

PROJECT NAME: Crane NSWC
PROJECT NUMBER: 9060
DRILLING COMPANY: BOWSER-MORNER
DRILLING RIG: CME 550 ATV

BORING No.: 13MWT44
DATE: 11-10-03
GEOLOGIST: M. G. COCHRAN
DRILLER: J. WALSH

Sample No. and Type or RQD	Depth (Ft.) or Run No.	Blows / 6" or RQD (%)	Sample Recovery / Sample Length	Lithology Change (Depth/Ft.) or Screened Interval	Soil Density/ Consistency or Rock Hardness	Color	Material Classification	USCS *	Remarks	PID/FID Reading (ppm) Sample	Sampler BZ	Borehole**	Driller BZ**
	1				SOFT	GREY	SHALY SILTSTONE		V. BROKEN, FRACS THRU OUT, HOR. FRACS FREQUENT, VERT FRACS FEW, MOIST THRU RUN TO 82.5'				
	78												
C5			10/							0	0	0	0
4.0/		40%	10										
10.0					MHARD	GREY	SHALY SILTSTONE		DRY, + BLOCKY AT 82.5				
				86									
	88				MHARD	LT GREY	SANDSTONE		V. F. LAMS ALONG HOR. BEDDING, DK GREY LAMS.				
							TD 88'						

* When rock coring, enter rock brokeness.

** Include monitor reading in 6 foot intervals @ borehole. Increase reading frequency if elevated reponse read.

Drilling Area Background (ppm): 0

Remarks: CHECKED FOR H2O AFTER 88', 1' OF H2O IN HOLE AFTER 1 HR.

Converted to Well: Yes ✓ No _____ Well I.D. #: 13MWT44

WELL NO.: 13MWT45

Tetra Tech NUS, Inc.

BEDROCK MONITORING WELL SHEET WELL INSTALLED IN BEDROCK

PROJECT CRANE NSWC	LOCATION SWMU 13	DRILLER JON KELFER
PROJECT NO. 9060	BORING 13MWT45	DRILLING METHOD ROTA-SONIC
DATE BEGUN 10-27-03	DATE COMPLETED 11-10-03	
FIELD GEOLOGIST FRED W. RAMSER		DEVELOPMENT METHOD BAILER/ WATER/SURGED
GROUND ELEVATION 688.76	DATUM NAVD 88	

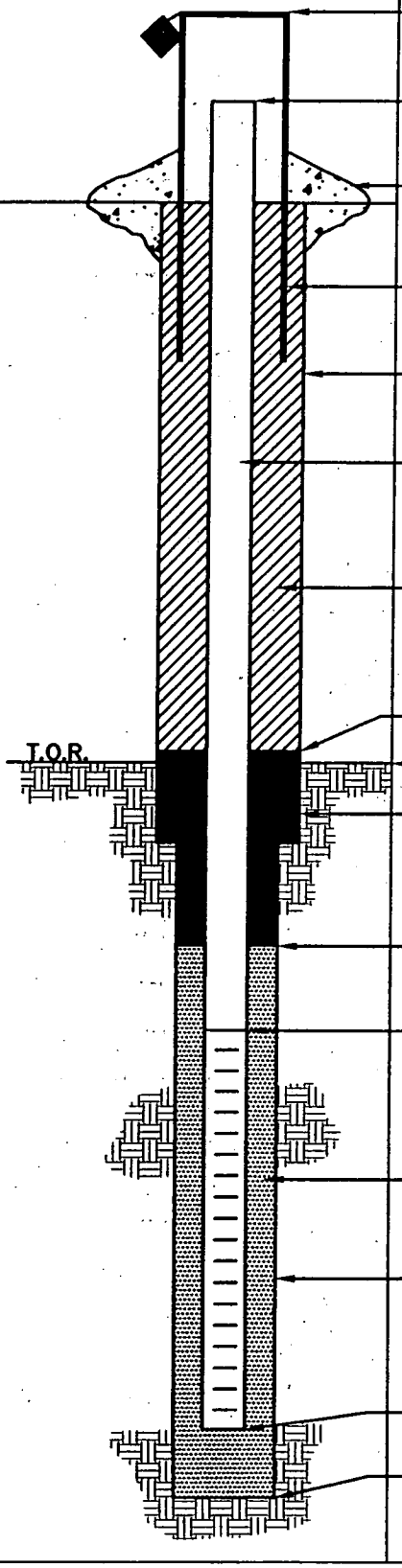

ELEVATION/HEIGHT OF TOP OF SURFACE CASING: 690.54/1.78

ELEVATION/HEIGHT TOP OF RISER: 690.59/1.83

TYPE OF SURFACE SEAL: CONCRETE 4' x 4' x 6"

I.D. OF SURFACE CASING: 4" x 4" SQ

DIAMETER OF HOLE: 11"

RISER PIPE I.D.: 2"

TYPE OF RISER PIPE: SCH. 40 PVC

TYPE OF BACKFILL: BENTONITE "PURE GOLD" CETCO. 6" ISOLATION CASING INSTALLED USING CEMENT/BENTONITE GROUT TO 39'

ELEVATION/DEPTH TOP OF SEAL: 683.76/5'

ELEVATION/DEPTH TOP OF BEDROCK: 678.76/10'

TYPE OF SEAL: BENTONITE "PURE GOLD" CHIPS CETCO

ELEVATION/DEPTH TOP OF SAND: 621.76/67

ELEVATION/DEPTH TOP OF SCREEN: 618.76/70

TYPE OF SCREEN: PVC SCH. 40

SLOT SIZE x LENGTH: 0.02 x 10'

I.D. SCREEN: 2"

TYPE OF SAND PACK: QTZ SAND 10/30 SEP/188

DIAMETER OF HOLE IN BEDROCK: 5"

CORE/REAM: CORE

ELEVATION/DEPTH BOTTOM SCREEN: 608.76/80

ELEVATION/DEPTH BOTTOM OF SAND: 604.76/84

ELEVATION/DEPTH BOTTOM OF HOLE: 604.76/84

BACKFILL MATERIAL BELOW SAND: NONE

ACAD: FORM_MWINBR.dwg 07/20/99 INL

Tetra Tech NUS, Inc.

BORING LOG

PROJECT NAME: Crane NSWC
PROJECT NUMBER: 9060
DRILLING COMPANY: BOWSER MORNER
DRILLING RIG: VERSA-SONIC

BORING No.: 13MWT45
DATE: 10-27-03
GEOLOGIST: FRED W. RAMSER
DRILLER: JON KEIFER

Sample No. and Type or RQD	Depth (Ft.) or Run No.	Blows / 6" or RQD (%)	Sample Recovery / Sample Length	Lithology Change (Depth/Ft.) or Screened Interval	Soil Density/ Consistency or Rock Hardness	Color	Material Classification	USCS *	Remarks	PID/FID Reading (ppm) Sample	Sampler BZ	Borehole**	Driller BZ**
									0-6' YEL BRN OCC MOTTLING				
									GRAY SILT + fg sand CUTTINGS YEL				
									BRN 6' TO ~ 15' BGS TURNING DK GREY				
									TO BLK DOWN TO 19' BGS				
	20				SOFT	BLK	COAL		BRITTLE				
					MED HARD	LT GREY	SILTSTONE	BR					
					VERY SOFT	LT GREY	CLAY W/ROCK FRAG.	↓	UNCONSOLIDATED				
		0%			HARD	↓	SANDSTONE	BR		10			
							GRADING DOWN	↓					
S-1	25					↓	WARD TO	V.BR					
1555						RED	& LAMINATED	↓					
						GREY	SILTSTONE	↓					
					SOFT	↓	CLAY + SILT + SAND W/OCCA ROCK FRAG.		UNCONSOLIDATED ↓	12			
			8/10				DK GREY						
	30				MED HARD	LT.	SILTY SANDSTONE						
					HARD	GREY	SANDSTONE	BR	IRREGULAR LAMINATION				
					↓		POORLY BEDDED	↓		13			
S-2 1620		10%											
	35				MED SOFT	DK	SILTSTONE	V.BR					
						GREY	ALT. BLK + GREY						
							LAMINATIONS		SANDSTONE	5			
					SOFT	DK	SILT + CLAY +		CLASTS. UNCONSOLIDATED				
			6/10		↓	GREY	fg SAND	↓					
	40												

* When rock coring, enter rock brokeness.

** Include monitor reading in 6 foot intervals @ borehole. Increase reading frequency if elevated reponse read.

Drilling Area Background (ppm): —

Remarks: STARTED @ 0' USING AIR, SWITCHED TO WATER @ ~10' USING 8" DRILL PIPE NO SAMPLING. INSTALLED ISOLATION CASING 10-28-03 TO 39'

Converted to Well: Yes ✓ No _____ Well I.D. #: 13MWT45

l/r

Tetra Tech NUS, Inc.

BORING LOG

PROJECT NAME: Crane NSWC
PROJECT NUMBER: 9060
DRILLING COMPANY: BOWSER MORNER
DRILLING RIG: VERSA-SONIC

BORING No.: 13MWT45
DATE: 11-10-03
GEOLOGIST: FRED W. RAMSER
DRILLER: JON KEIFER

Sample No. and Type or RQD	Depth (Ft.) or Run No.	Blows / 6" or RQD (%)	Sample Recovery / Sample Length	Lithology Change (Depth/Ft.) or Screened Interval	MATERIAL DESCRIPTION: Soil Density/ Consistency or Rock Hardness	Color	Material Classification	USCS *	Remarks	PID/FID Reading (ppm): Sample	Sampler BZ	Borehole**	Driller BZ**
	40						DK GREY						
							(SILTSTONE)					2	0
	45												
												0	
							CUTTINGS TURN						
							YEL BRN SILT+						
	50						SAND						
							(SANDSTONE)						
												0	
	55												
							CUTTINGS DK GREY						
							SILT+CLAY						
					SOFT	DK GRAY	SILTSTONE	V.BR					
							LAM. VTHIN		FISSIL TO				
	60						BEDDING.		66'	11			
							CLAYEY 59'-61'						
S-B							SILTSTONE					0	
		10											
	65									12			

* When rock coring, enter rock brokeness.
** Include monitor reading in 6-foot intervals @ borehole. Increase reading frequency if elevated reponse read.

Drilling Area Background (ppm): —

Remarks: LOG CUTTINGS FROM 39' TO 57, BEGIN TO CORE @ 57 W/4" TO CORE PIPE

Converted to Well: Yes ✓ No ____ Well I.D. #: 13MWT45

Tetra Tech NUS, Inc.

BORING LOG

PROJECT NAME: Crane NSWC
PROJECT NUMBER: 9060
DRILLING COMPANY: BOWSER MORNER
DRILLING RIG: VERSA-SONIC

BORING No.: 13MWT45
DATE: 11-10-03
GEOLOGIST: FRED W RAMSER
DRILLER: JON KEIFER

Sample No. and Type or RQD	Depth (Ft.) or Run No.	Blows / 6" or RQD (%)	Sample Recovery / Sample Length	Lithology Change (Depth/Ft.) or Screened Interval	Soil Density/ Consistency or Rock Hardness	Color	Material Classification	USCS *	Remarks	PID/FID Reading (ppm) Sample	Sampler BZ	Borehole**	Driller BZ**
	65						SILT STONE						
						DK	MUD STONE	B1					
			8 / 11			GREY	↓ POORLY BEDDED					0	
					VERY SOFT		NO RECOVERY		AS PER				
	70				BASED ON		CUTTINGS		DRY CORE				
					DRILL RATE		AND DRILL		RUNS FROM				
							RATE INDICATE		WELL 13MWT44				
S-4							(SHALE). TO		WILL INSTALL				
							78' BGS		WELL FROM				
	75								70' TO 80'				
									SAND: 67 - 84			0	
			0 / 10				↓						
							SILT STONE	V.BR					
	80						↓						
S-5		15/6								11			
						GREY	SANDSTONE	B1				0	
							↓						
	85			TD-84									

* When rock coring, enter rock brokeness.

** Include monitor reading in 6 foot intervals @ borehole. Increase reading frequency if elevated reponse read.

Drilling Area Background (ppm): —

Remarks: INSTALLED WELL 70'-80'
SAND 67 - 84'

Converted to Well: Yes ✓ No _____ Well I.D. #: 13MWT45

WELL NO.: 13MW146

Tetra Tech NUS, Inc.

BEDROCK MONITORING WELL SHEET WELL INSTALLED IN BEDROCK

PROJECT: NSWC CRANE
PROJECT NO.: 9060
DATE BEGUN: 11/21/03
FIELD GEOLOGIST: S. GRIER
GROUND ELEVATION: 651.64

LOCATION: SWMU 13
BORING: 13MWT46
DATE COMPLETED: 11/22/03
DATUM: NAVD 88

DRILLER: J. KEIFER
DRILLING METHOD: ROTO-SONIC
DEVELOPMENT METHOD: BAILER/WATERA/SURGE

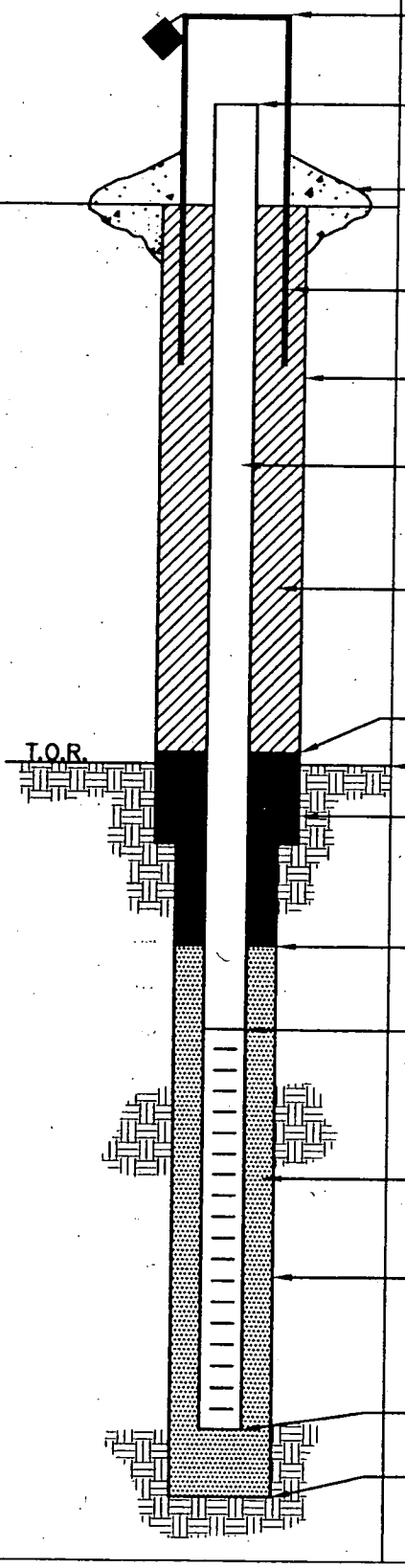

ELEVATION/HEIGHT OF TOP OF SURFACE CASING: 653.63/2.04

ELEVATION/HEIGHT TOP OF RISER: 653.61/1.97

TYPE OF SURFACE SEAL: CONCRETE

I.D. OF SURFACE CASING: 4" steel

DIAMETER OF HOLE: 11" down to 39'
ISOLATION CASING 6" DIA. SET TO 39' BGS.

RISER PIPE I.D.: 2"
TYPE OF RISER PIPE: 2.5" PVC

TYPE OF BACKFILL: BENTONITE PURE GOLD
ISOLATION CASING GROUTED w/ CEMENT/BENTONITE SLURRY.

ELEVATION/DEPTH TOP OF SEAL: 648.64 / 3'

ELEVATION/DEPTH TOP OF BEDROCK: 648.64 / 3'

TYPE OF SEAL: BENTONITE PURE GOLD GEL CHIPS

ELEVATION/DEPTH TOP OF SAND: 599.64 / 52'

ELEVATION/DEPTH TOP OF SCREEN: 596.64 / 55'
TYPE OF SCREEN: PVC
SLOT SIZE x LENGTH: 20 x 10'
I.D. SCREEN: 2"

TYPE OF SAND PACK: GLOBAL MED. QTZ SAND

DIAMETER OF HOLE IN BEDROCK: 4"/5"
CORE/REAM:

ELEVATION/DEPTH BOTTOM SCREEN: 586.64 / 65'
ELEVATION/DEPTH BOTTOM OF SAND: 583.64 / 68'
ELEVATION/DEPTH BOTTOM OF HOLE: /
BACKFILL MATERIAL BELOW SAND: N/A

ACAD: FORM_MWINBR.dwg 07/20/99 INL

Tetra Tech NUS, Inc.

BORING LOG

PROJECT NAME: Crane NSWC
PROJECT NUMBER: 9060
DRILLING COMPANY: BOWSER MORNER
DRILLING RIG: VERSA-SONIC

BORING No.: 13 MWT 46
DATE: 11/21/03
GEOLOGIST: S. GRIER
DRILLER: J. REIFER

Sample No. and Type or RQD	Depth (Ft.) or Run No.	Blows / 6" or RQD (%)	Sample Recovery / Sample Length	Lithology Change (Depth/Ft.) or Screened Interval	Soil Density/ Consistency or Rock Hardness	Color	Material Classification	USCS *	Remarks	PID/FID Reading (ppm) Sample	Sampler BZ	Borehole**	Driller BZ**
	25												
C 1	28	25%	3/3		VERY SOFT TO MED SOFT	GR	CLAYSTONE + SILTSTONE LAYERS 40% CLAY	BR/VBR	CLAY IS VERY SOFT + WEATHERED SILT IS MORE COH.				
									ROCK FRAGS ARE LARGEST				0.8
					MED TO MED. SOFT	GR/BLK	SILTSTONE W/ LAYERS OF SHALE	BR	THIN LAMS OF SHALE + ROCK FRAGS				
	30												
					VERY SOFT	GR	CLAYSTONE W/ POCKETS OF SILTSTONE	VBR	HIGHLY WEATHERED				
	35						SILTSTONE W/ Very thin lams of F.sand + shale	BR	V. THIN LAMS OF FINE SAND				
C 2						GR	CLAYSTONE W/ LAYERS OF SHALE	VBR	LENSES OF SHALE				
	38	25%	10/10			GR	SILTSTONE W/ LAMS OF F.SAND + SHALE		ROCK CHIPS			15.9	
									LOW RECOVERY PROBABLY SILTSTONE				
	40												
	45				VERY SOFT	GR/BLUE	SILTSTONE		HIGHLY WEATHERED				
C 3		14%											
	48		2.5/10						LOW RECOVERY				

* When rock coring, enter rock brokeness.
** Include monitor reading in 6 foot intervals @ borehole. Increase reading frequency if elevated reponse read.

Drilling Area Background (ppm): 0.6

Remarks: VERY LOW RECOVERY BETWEEN 40' → 68'
HIGHLY FRACTURED ROCK
6" ISOLATION CASING SET TO 39' BGS.

Converted to Well: Yes ✓ No _____ Well I.D. #: 13 MWT 46

Tetra Tech NUS, Inc.

BORING LOG

PROJECT NAME: Crane NSWC
PROJECT NUMBER: 9060
DRILLING COMPANY: BOWSER MORNER
DRILLING RIG: VERSA-SONIC

BORING No.: 13 MWT 46
DATE: 11/22/03
GEOLOGIST: S. GRIER
DRILLER: J. KEIFER

Sample No. and Type or RQD	Depth (Ft.) or Run No.	Blows / 6" or RQD (%)	Sample Recovery / Sample Length	Lithology Change (Depth/Ft.) or Screened Interval	MATERIAL DESCRIPTION: Soil Density/ Consistency or Rock Hardness	Color	Material Classification	USCS*	Remarks	PID/FID Reading (ppm): Sample	Sampler BZ	Borehole**	Driller BZ**
	50	5					SILTSTONE	BR	LOW RECOVERY				
	55												109
				HARD	VERY HARD	YELLOW GR	SANDSTONE		FINE GRAINED				
C4									LOW RECOVERY				
		0%	15/10										
	60												
	65				VERY SIFT	GREY BLUE	SILTSTONE		Screen set				1
									@ 65'-55'				
C5					VERY HARD	YELLOW BLUE	SANDSTONE						
	68	0%											

* When rock coring, enter rock brokeness.

** Include monitor reading in 6 foot intervals @ borehole. Increase reading frequency if elevated reponse read.

Remarks: HIGHLY FRACTURED BETWEEN 40'-68'

Drilling Area Background (ppm): 0.6

Converted to Well: Yes ✓ No _____ Well I.D. #: 13 MWT 46

WELL NO.: 13MWT47

Tetra Tech NUS, Inc.

BEDROCK
MONITORING WELL SHEET
WELL INSTALLED IN BEDROCK

PROJECT NWSC CRANE	LOCATION CRANE, IN	DRILLER BOWSER MORNER
PROJECT NO. 9060	BORING 13MWT47	DRILLING METHOD HSA/AR
DATE BEGUN 11-19-03	DATE COMPLETED 11-20-03	
FIELD GEOLOGIST M. G. COCHRAN		DEVELOPMENT METHOD BAILER/PUMP/SURGE
GROUND ELEVATION 675.41	DATUM NAVD 88	

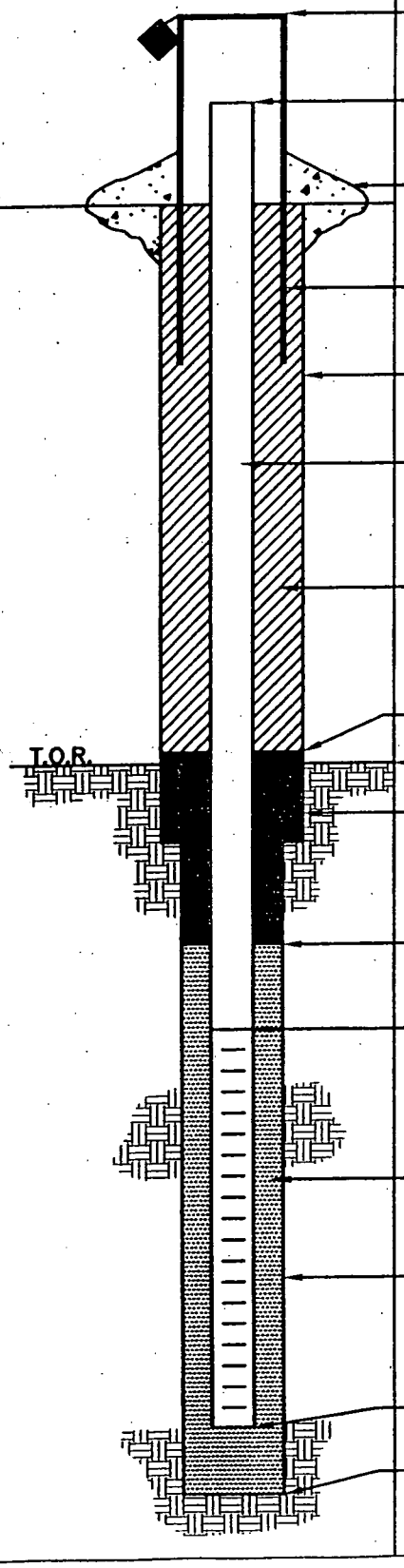

ELEVATION/HEIGHT OF TOP OF SURFACE CASING: 677.34/1.91

ELEVATION/HEIGHT TOP OF RISER: 677.23/1.82

TYPE OF SURFACE SEAL: CONCRETE

I.D. OF SURFACE CASING: 4"x4" SQ.

DIAMETER OF HOLE: 8 1/2 TO 4', 4" TO TD

RISER PIPE I.D.: 2"

TYPE OF RISER PIPE: PVC SCH. 40

TYPE OF BACKFILL: CETCO VOLCLAY BENTONITE CHIPS

ELEVATION/DEPTH TOP OF SEAL: 672.41/3'

ELEVATION/DEPTH TOP OF BEDROCK: 671.41/4'

TYPE OF SEAL: CETCO VOLCLAY BENTONITE CHIPS

ELEVATION/DEPTH TOP OF SAND: 669.41/6

ELEVATION/DEPTH TOP OF SCREEN: 667.41/8

TYPE OF SCREEN: PVC SLOTTED

SLOT SIZE x LENGTH: .020X10'

I.D. SCREEN: 2"

TYPE OF SAND PACK: BEST MEDIUM SAND

DIAMETER OF HOLE IN BEDROCK: 4"

CORE/REAM:

ELEVATION/DEPTH BOTTOM SCREEN: 657.41/18

ELEVATION/DEPTH BOTTOM OF SAND: 654.41/21

ELEVATION/DEPTH BOTTOM OF HOLE: 654.41/21

BACKFILL MATERIAL BELOW SAND: N/A

ACAD:FORM_MWINBR.dwg 07/20/99 INL

Tetra Tech NUS, Inc.

BORING LOG

PROJECT NAME: Crane NSWC
PROJECT NUMBER: 9060
DRILLING COMPANY: BOWSER MORNER
DRILLING RIG: CME 550

BORING No.: 13MWT47
DATE: 11-19-03
GEOLOGIST: M. G. COCHRAN
DRILLER: J. WALSH

Sample No. and Type or RQD	Depth (Ft.) or Run No.	Blows / 6" or RQD (%)	Sample Recovery / Sample Length	Lithology Change (Depth/Ft.) or Screened Interval	Soil Density/ Consistency or Rock Hardness	Color	Material Classification	USCS *	Remarks	PID/FID Reading (ppm) Sample	Sampler BZ	Borehole**	Driller BZ**
						LT BRN	CLAYEY SILT		LOOKS NTL	0	0	0	0
	4			4.0									
S1		50/4"	.2/		SOFT	LT BRN	SANDSTONE						
	6		.3										
									HIT H2O @ 6' BLOCKY, HOR.				
C1									FRACS @ .4' INTERVALS	0	0	0	0
7.3/		91%	.8/						FE STAINED ZONES ~.4'				
8'			8						THICK THRU CORE AT .5'				
									INTERVALS				
					M. HARD	LT BRN							
	12				M. HARD	LT GREY	SANDSTONE		LAMINATED W V.F LMS. PK				
									GREY. ENTIRE CORE IS DAMP.				
									LITTLE H2O. BLOCKY				
C2										0	0	0	0
8.8/		97%	9/										
9			9										
	21						TD 21'						

* When rock coring, enter rock brokeness.

** Include monitor reading in 6 foot intervals @ borehole. Increase reading frequency if elevated reponse read.

Drilling Area Background (ppm): 0

Remarks: H2O @ 3.7' BGS ON 11-20-03

Converted to Well: Yes ✓ No _____ Well I.D. #: 13MWT47

Tetra Tech NUS, Inc.

BORING LOG

PROJECT NAME: Crane NSWC
PROJECT NUMBER: 9060
DRILLING COMPANY: NA
DRILLING RIG: HAND AUGER

BORING No.: 13SB16
DATE: 12/8/03
GEOLOGIST: S. GRIER
DRILLER: NA

Sample No. and Type or RQD	Depth (Ft.) or Run No.	Blows / 6" or RQD (%)	Sample Recovery / Sample Length	Lithology Change (Depth/Ft.) or Screened Interval	MATERIAL DESCRIPTION: Soil Density/ Consistency or Rock Hardness	Color	Material Classification	USCS*	Remarks	PID/FID Reading (ppm): Sample	Sampler BZ	Borehole**	Driller BZ**
	0					BLK	SILTY LOAM		SLIGHTLY MOIST				
0002						LT BR	SILTY CLAY		MOIST + COHESIVE				
0204	4												

* When rock coring, enter rock brokeness.

** Include monitor reading in 6 foot intervals @ borehole. Increase reading frequency if elevated reponse read.

Remarks: WATER IN HOLE AT 2.0'

Drilling Area Background (ppm):

Converted to Well: Yes ____ No ✓ Well I.D. #: ____

Tetra Tech NUS, Inc.

BORING LOG

PROJECT NAME: Crane NSWC
PROJECT NUMBER: 9060
DRILLING COMPANY: NA
DRILLING RIG: HAND AUGER

BORING No.: 13SB17
DATE: 12/8/03
GEOLOGIST: S. BRIER
DRILLER: NA

Sample No. and Type or RQD	Depth (Ft.) or Run No.	Blows / 6" or RQD (%)	Sample Recovery / Sample Length	Lithology Change (Depth/Ft.) or Screened Interval	MATERIAL DESCRIPTION: Soil Density/ Consistency or Rock Hardness	Color	Material Classification	USCS *	Remarks	PID/FID Reading (ppm): Sample	Sampler BZ	Borehole**	Driller BZ**
	0												
	1					Br.	SILTY LOAM		SLIGHTLY MOIST				
0002						Lt. Br./ Gr.	SILTY CLAY		MOIST + COHESIVE				
0204	4					Gr.	INCREASING CLAY % + FINE SAND						

* When rock coring, enter rock brokeness.

** Include monitor reading in 6 foot intervals @ borehole. Increase reading frequency if elevated reponse read.

Remarks: NO WATER IN HOLE

Drilling Area Background (ppm):

Converted to Well: Yes ____ No ✓ Well I.D. #: N/A

Tetra Tech NUS, Inc.

BORING LOG

PROJECT NAME: Crane NSWC
PROJECT NUMBER: 9060
DRILLING COMPANY: NA
DRILLING RIG: HAND AUGER

BORING No.: 13 SB 18
DATE: 12/8/03
GEOLOGIST: S. GRIER
DRILLER: NA

Sample No. and Type or RQD	Depth (Ft.) or Run No.	Blows / 6" or RQD (%)	Sample Recovery / Sample Length	Lithology Change (Depth/Ft.) or Screened Interval	MATERIAL DESCRIPTION: Soil Density/ Consistency or Rock Hardness	Color	Material Classification	USCS *	Remarks	PID/FID Reading (ppm): Sample	Sampler BZ	Borehole**	Driller BZ**
	0												
						BLK.	SILTY LOAM		SLIGHTLY MOIST				
0002						LT. BR.	SILTY CLAY		MOIST + COHESIVE				
0204	4					ORNG.	CLAYEY FINE SAND 80% SAND		MOIST + SLIGHTLY COHESIVE				

* When rock coring, enter rock brokeness.

** Include monitor reading in 6 foot intervals @ borehole. Increase reading frequency if elevated reponse read.

Remarks: WATER IN HOLE AT 3.0'

Drilling Area Background (ppm):

Converted to Well: Yes ____ No ✓ Well I.D. #: N/A

Tetra Tech NUS, Inc.

BORING LOG

PROJECT NAME: Crane NSWC
PROJECT NUMBER: 9060
DRILLING COMPANY: NA
DRILLING RIG: HAND AUGER

BORING No.: 13 SB 19
DATE: 12/8/03
GEOLOGIST: S. GRIER
DRILLER: NA

Sample No. and Type or RQD	Depth (Ft.) or Run No.	Blows / 6" or RQD (%)	Sample Recovery / Sample Length	Lithology Change (Depth/Ft.) or Screened Interval	MATERIAL DESCRIPTION: Soil Density/ Consistency or Rock Hardness	Color	Material Classification	USCS*	Remarks	PID/FID Reading (ppm): Sample	Sampler BZ	Borehole**	Driller BZ**
	0												
	1					BLK.	SILTY LOAM		SLIGHTLY MOIST				
						Br.	SILTY CLAY		MOIST + COHESIVE				
0002	2					Br.	SILTY LOAM W/ GRAVEL + FILL		SLIGHTLY MOIST				
0203	3					Br.	SILTY CLAY		MOIST + COHESIVE				

* When rock coring, enter rock brokeness.

** Include monitor reading in 6 foot intervals @ borehole. Increase reading frequency if elevated reponse read.

Drilling Area Background (ppm):

Remarks: REFUSAL AT 3.0'

Converted to Well: Yes ____ No ✓ Well I.D. #: N/A

Tetra Tech NUS, Inc.

BORING LOG

PROJECT NAME: Crane NSWC
PROJECT NUMBER: 9060
DRILLING COMPANY: NA
DRILLING RIG: HAND AUGER

BORING No.: 13 SB 20
DATE: 12/8/03
GEOLOGIST: S. GRIER
DRILLER: NA

Sample No. and Type or RQD	Depth (Ft.) or Run No.	Blows / 6" or RQD (%)	Sample Recovery / Sample Length	Lithology Change (Depth/Ft.) or Screened Interval	MATERIAL DESCRIPTION: Soil Density/ Consistency or Rock Hardness	Color	Material Classification	USCS*	Remarks	PID/FID Reading (ppm): Sample	Sampler BZ	Borehole**	Driller BZ**
0001	1						SILTY LOAM W/ ORGANIC MTL CLAYEY SAND W/GRAVEL + ROCKS		SLIGHTLY MOIST				

* When rock coring, enter rock brokeness.

** Include monitor reading in 6 foot intervals @ borehole. Increase reading frequency if elevated reponse read.

Remarks: REFUSAL AT 1.0'

Drilling Area Background (ppm):

Converted to Well: Yes ____ No ✓ Well I.D. #: N/A

Tetra Tech NUS, Inc.

BORING LOG

PROJECT NAME: Crane NSWC
PROJECT NUMBER: 9060
DRILLING COMPANY: NA
DRILLING RIG: HAND AUGER

BORING No.: 13SB21
DATE: 12/8/03
GEOLOGIST: S GRIER
DRILLER: NA

Sample No. and Type or RQD	Depth (Ft.) or Run No.	Blows / 6" or RQD (%)	Sample Recovery / Sample Length	Lithology Change (Depth/Ft.) or Screened Interval	MATERIAL DESCRIPTION: Soil Density/ Consistency or Rock Hardness	Color	Material Classification	USCS *	Remarks	PID/FID Reading (ppm): Sample	Sampler BZ	Borehole**	Driller BZ**
	0					BK.	SILTY LOAM		SLIGHTLY MOIST				
0002						Lt Br.	SILTY CLAY W/ SOME FINE SAND		MOIST + COHESIVE				
						Org.	CLAYEY SAND		MOIST + SEMI COHESIVE				
0204	4					Lt Br.	SILTY CLAY W/ SAND (FINE)		MOIST + COHESIVE				

* When rock coring, enter rock brokeness.
** Include monitor reading in 6 foot intervals @ borehole. Increase reading frequency if elevated reponse read.

Drilling Area Background (ppm):

Remarks:

Converted to Well: Yes ____ No ✓ Well I.D. #: N/A

Tetra Tech NUS, Inc.

BORING LOG

PROJECT NAME: Crane NSWC
PROJECT NUMBER: 9060
DRILLING COMPANY: NA
DRILLING RIG: HAND AUGER

BORING No.: 13 SB 22
DATE: 12/8/03
GEOLOGIST: S. GRIER
DRILLER: NA

Sample No. and Type or RQD	Depth (Ft.) or Run No.	Blows / 6" or RQD (%)	Sample Recovery / Sample Length	Lithology Change (Depth/Ft.) or Screened Interval	MATERIAL DESCRIPTION: Soil Density/ Consistency or Rock Hardness	Color	Material Classification	USCS *	Remarks	PID/FID Reading (ppm): Sample	Sampler BZ	Borehole**	Driller BZ**
	0				BLK.	BLK	SILTY LOAM / GRAVEL		SLIGHTLY MOIST				
					Br.	Br.	SILTY CLAY		MOIST + COHESIVE				
0.002							CLAYEY SAND W/ GRAVEL						
							INCREASING GRAVEL						
0264	3.5					org.	SANDY CLAY W/GRAVEL						

* When rock coring, enter rock brokeness.

** Include monitor reading in 6 foot intervals @ borehole. Increase reading frequency if elevated reponse read.

Drilling Area Background (ppm):

Remarks: REFUSAL AT 3.5'

Converted to Well: Yes ____ No ✓ Well I.D. #: N/A

Tetra Tech NUS, Inc.

BORING LOG

PROJECT NAME: Crane NSWC
PROJECT NUMBER: 9060
DRILLING COMPANY: NA
DRILLING RIG: HAND AUGER

BORING No.: 13 SB 23
DATE: 12/8/03
GEOLOGIST: S. GRIER
DRILLER: NA

Sample No. and Type or RQD	Depth (Ft.) or Run No.	Blows / 6" or RQD (%)	Sample Recovery / Sample Length	Lithology Change (Depth/Ft.) or Screened Interval	MATERIAL DESCRIPTION: Soil Density/ Consistency or Rock Hardness	Color	Material Classification	USCS *	Remarks	PID/FID Reading (ppm): Sample	Sampler BZ	Borehole**	Driller BZ**
	0												
						BK.	SILTY LOAM W/ GRAVEL		SLIGHTLY MOIST				
0202						ORG/BLK	SANDY CLAY W/ PATCHES OF ORGANIC MAT'RL		MOIST + SLIGHTLY COHESIVE				
						Org.	CLAYEY SAND						
0204	4								↓				

* When rock coring, enter rock brokeness.

** Include monitor reading in 6 foot intervals @ borehole. Increase reading frequency if elevated reponse read.

Drilling Area Background (ppm):

Remarks:

Converted to Well: Yes ____ No ✓ Well I.D. #: N/A

Tetra Tech NUS, Inc.

BORING LOG

PROJECT NAME: Crane NSWC
PROJECT NUMBER: 9060
DRILLING COMPANY: NA
DRILLING RIG: HAND AUGER

BORING No.: 13 SB24
DATE: 12/8/03
GEOLOGIST: S. GRIER
DRILLER: NA

Sample No. and Type or RQD	Depth (Ft.) or Run No.	Blows / 6" or RQD (%)	Sample Recovery / Sample Length	Lithology Change (Depth/Ft.) or Screened Interval	MATERIAL DESCRIPTION: Soil Density/ Consistency or Rock Hardness	Color	Material Classification	USCS *	Remarks	PID/FID Reading (ppm): Sample	Sampler BZ	Borehole**	Driller BZ**
	0					Blk. Org.	SILTY LOAM CLAYEY SAND		MOIST + SEMI COHESIVE				
0002						Br.	SANDY CLAY 70% clay		MOIST + COHESIVE				
0203	3					Org.	SILTY SAND W/GRAVEL		MOIST + SEMI COHESIVE				

* When rock coring, enter rock brokeness.

** Include monitor reading in 6 foot intervals @ borehole. Increase reading frequency if elevated reponse read.

Remarks: REFUSAL AT 3.0'

Drilling Area Background (ppm):

Converted to Well: Yes ____ No ✓ Well I.D. #: N/A

Tetra Tech NUS, Inc.

BORING LOG

PROJECT NAME: Crane NSWC
PROJECT NUMBER: 9060
DRILLING COMPANY: NA
DRILLING RIG: HAND AUGER

BORING No.: 13 SB 25
DATE: 12/8/03
GEOLOGIST: S. GRIER
DRILLER: NA

Sample No. and Type or RQD	Depth (Ft.) or Run No.	Blows / 6" or RQD (%)	Sample Recovery / Sample Length	Lithology Change (Depth/Ft.) or Screened Interval	MATERIAL DESCRIPTION: Soil Density/ Consistency or Rock Hardness	Color	Material Classification	USCS*	Remarks	PID/FID Reading (ppm): Sample	Sampler BZ	Borehole**	Driller BZ**
	0												
						Blk.	SILTY LOAM W/GRAVEL		SLIGHTLY MOIST				
0002						Org.	SILTY SAND W/CLAY (FINE)		MOIST SEMI COHESIVE				
0204	4												

* When rock coring, enter rock brokeness.

** Include monitor reading in 6 foot intervals @ borehole. Increase reading frequency if elevated reponse read.

Drilling Area Background (ppm):

Remarks:

Converted to Well: Yes ____ No ✓ Well I.D. #: N/A

APPENDIX B.1.3
SWMU 16 BORING LOGS AND MONITORING WELL CONSTRUCTION DIAGRAMS
ROUND 1

Tetra Tech NUS, Inc.

BORING LOG

PROJECT NAME: NSWC CRANE
PROJECT NUMBER: N9060 CTO 0279
DRILLING COMPANY: BOWSER MORNER
DRILLING RIG: Roto Sonic

BORING NUMBER: 16MW701 / SB41
DATE: 4/8/03
GEOLOGIST: BOB BALKOVEC
DRILLER: DAVE S.

Sample No. and Type or RQD	Depth (Ft.) or Run No.	Blows / 6" or RQD (%)	Sample Recovery / Sample Length	Lithology Change (Depth /Ft.) or Screened Interval	Soil Density/ Consistency or Rock Hardness	Color	Material Classification	USCS*	Remarks	PID/FID Reading (ppm) Sample	Sampler BZ	Borehole**	Driller BZ**
	1				MUSTY & SOFT	BR	.5' TOP SOIL	ML		0.0			
	2				MUSTY &		.5'-7' CLAY	CL					
	3				M. STIFF								
S-1 1024	4		3.9'/4'										
	5				DRY &				MED PLASTICITY				
	6				M. STIFF				4'-7'	0.0			
	7												
	8					YELL OR	7'-8' SANDY CLAY		6" CASING TO 9'				
S-2 1040	9		4.9'/5'		DRY & SOFT		SILTSTONE 8'-14'	BR	THIN LAM				
	10				DRY &								
	11				M STIFF					0.0			
	12					LT							
	13					BR							
S-3 1103	14		4.8'/5'		DRY & HARD	LT GRAY	SHALEY 13'-14'						
	15				MUSTY &	YELL	SANDY CLAY W/ 14'-18'		WEATHERED				
	16				M STIFF	OR	S.S. FRAGS		SANDSTONE	0.0			
	17								POSS SATURATION				
	18								@ 16-16.5'				
S-4 1147	19		4.8'/5'		WET &	LT GRAY	SHALEY SILTSTONE 18'-19'	MS					
	20					DK	SHALE 19'-24'	BR					
	21					GRAY				0.0			
	22												
	23												
S-5 1400	24		4.9'/5'										

* When rock coring, enter rock brokeness.

** Include monitor reading in 6 foot intervals @ borehole. Increase reading frequency if elevated reponse read.

Drilling Area Background (ppm): 0.0

Remarks: 6" 0-4' WELL SET @ 24' 10' SCREEN
5" 4'-24' SAND TO 12'
BENT TO 10' VER. CLAY TO 2'

Converted to Well: Yes X No ____ Well I.D. #: 16MW701

Tetra Tech NUS, Inc.

BEDROCK
MONITORING WELL SHEET

WELL No.: 16MW101

PERMIT No:

PROJECT:	NSWC CRANE	DRILLING Co.:	BOWSER MORNER	BORING No.:	16MW101/SB41
PROJECT No.:	9060 CTO 0279	DRILLER:	DAVE S.	DATE COMPLETED:	4/9/03
SITE:	SWMU 16	DRILLING METHOD:	ROTOSONIC	NORTHING:	1371193.488
GEOLOGIST:	B. BALKOVEC	DEV. METHOD:	WATTERA	EASTING:	3037881.785

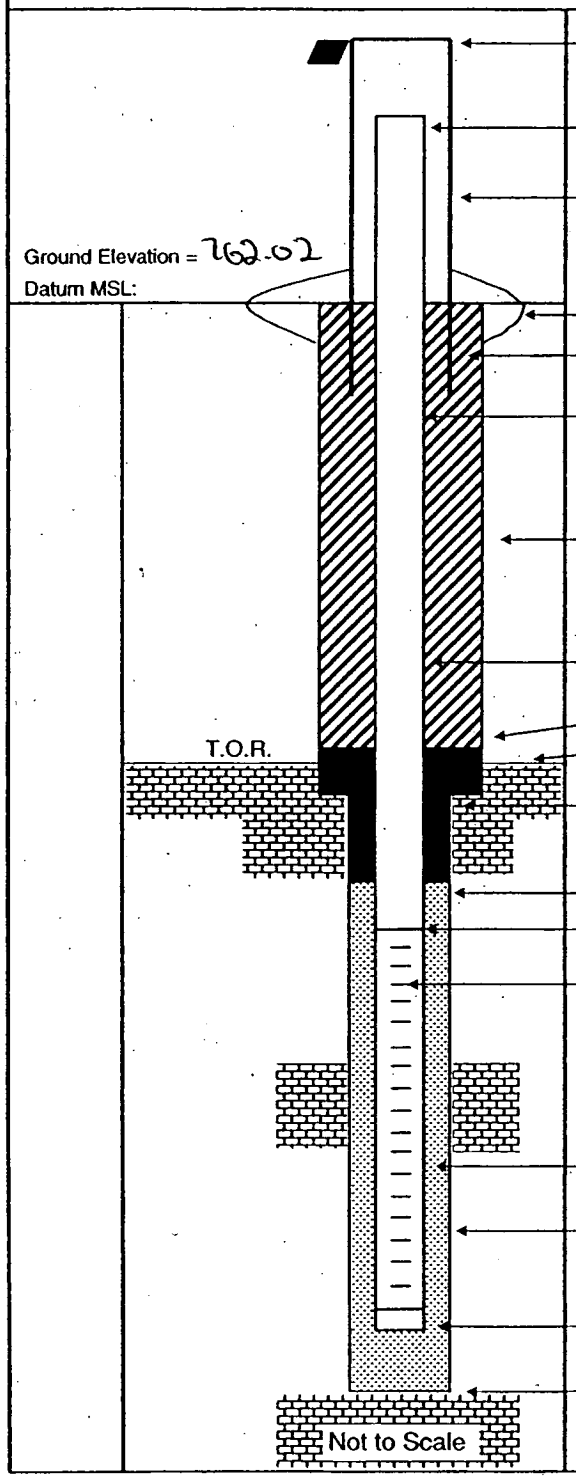

Elevation of Top of Casing: 765.00

Stick Up of Casing Above Ground Surface: 2.48

Elevation of Top of Riser: 764.5

I.D. of Surface Casing: 4" SQUARE

Type of Surface Casing: STEEL

Type of Surface Seal: 4"x4"x6" PAD

I.D. of Permanent Casing: NA

I.D. of Riser: 2"

Type of Riser: PVC

Borehole Diameter: 5"

Type of Backfill: VOL CLAY

Elevation / Depth Top of Seal: 752.02 / 10'

Elevation / Depth Top of Bedrock: 754.02 / 8'

Type of Seal: BENT CHIPS

Elevation / Depth of Top of Filter Pack: 750.02 / 12'

Elevation / Depth of Top of Screen: 748.02 / 14'

Type of Screen: PVC

Slot Size x Length: .20 x 10'

I.D. of Screen: 2"

Type of Filter Pack: No. 20-40 SAND

Diameter of Hole in Bedrock:
Core / Ream: 5"

Elevation / Depth of Bottom of Screen: 738.02 / 24'

Elevation / Total Depth of Borehole: 738.02 / 24'

Tetra Tech NUS, Inc.

BORING LOG

PROJECT NAME: NSWC CRANE
PROJECT NUMBER: N9060 CTO 0279
DRILLING COMPANY: BOWSER MORNER
DRILLING RIG: ROTOSONIC

BORING NUMBER: 16MW702
DATE: 4/11/03
GEOLOGIST: BOB BALKOVEC
DRILLER: DAVE S.

Sample No. and Type or RQD	Depth (Ft.) or Run No.	Blows / 6" or RQD (%)	Sample Recovery / Sample Length	Lithology Change (Depth /Ft.) or Screened Interval	MATERIAL DESCRIPTION: Soil Density/ Consistency or Rock Hardness	Color	Material Classification	USCS *	Remarks	PID/FID Reading (ppm): Sample	Sampler BZ	Borehole**	Driller BZ**
	1				MOIST	BR	.5' TOP SOIL			0.0			
	2				MOIST		CLAYEY SILT	ML					
	3				M. STIFF								
S-1 0829	4		1.5' / 4'										
	5					BR	4-4.5 CLAYEY SILT			0.0	0.0	0.0	0.0
	6				SOFT +	GRAY	4.5-8' SILTY CLAY	CL					
	7				MOIST				V.SAT @ 7'-8'				
S-2 0811	8		4' / 4'										
	9				STIFF +	YELL	8-10.5' SILTY SAND W/ SS		WEATHERED SS				
	10					GR	FRAGS		8'-13'				
	11			▼?	HARD		SAND SEAM 10.5'-13'		POSS WATER @ 10.5'				
	12				STIFF +								
S-3 0848	13		4.5' / 5'		MOIST								
	14					DK	SHALE 13'-18'	VAR					
	15					GRAY							
	16												
	17								WELL @ 16' @ 0838				
S-4 0838	18		5' / 5'						WATER RUNNING				
				T.D. 18'			WELL SET @ 18 2" PVC		INTO HOLE.				
							SCREENED 8'-18'						
							SAND 6'						
							BENTCHIPS TO 2'						

* When rock coring, enter rock brokeness.

** Include monitor reading in 6 foot intervals @ borehole. Increase reading frequency if elevated reponse read.

Remarks: 5" 0-18'

Drilling Area Background (ppm): 0.0

Converted to Well: Yes X No _____ Well I.D. #: 16MW702

Tetra Tech NUS, Inc.

BEDROCK MONITORING WELL SHEET

WELL No.: 16MW702

PERMIT No:

PROJECT:	NSWC CRANE	DRILLING Co.:	BOWSER MORNER	BORING No.:	16MW702
PROJECT No.:	9060 CTO 0279	DRILLER:	DAVES	DATE COMPLETED:	4/1/03
SITE:	SWMU 16	DRILLING METHOD:	ROTOSONIC	NORTHING:	1371146.42
GEOLOGIST:	B. BALKOVEC	DEV. METHOD:	WATTERA	EASTING:	3032554.16

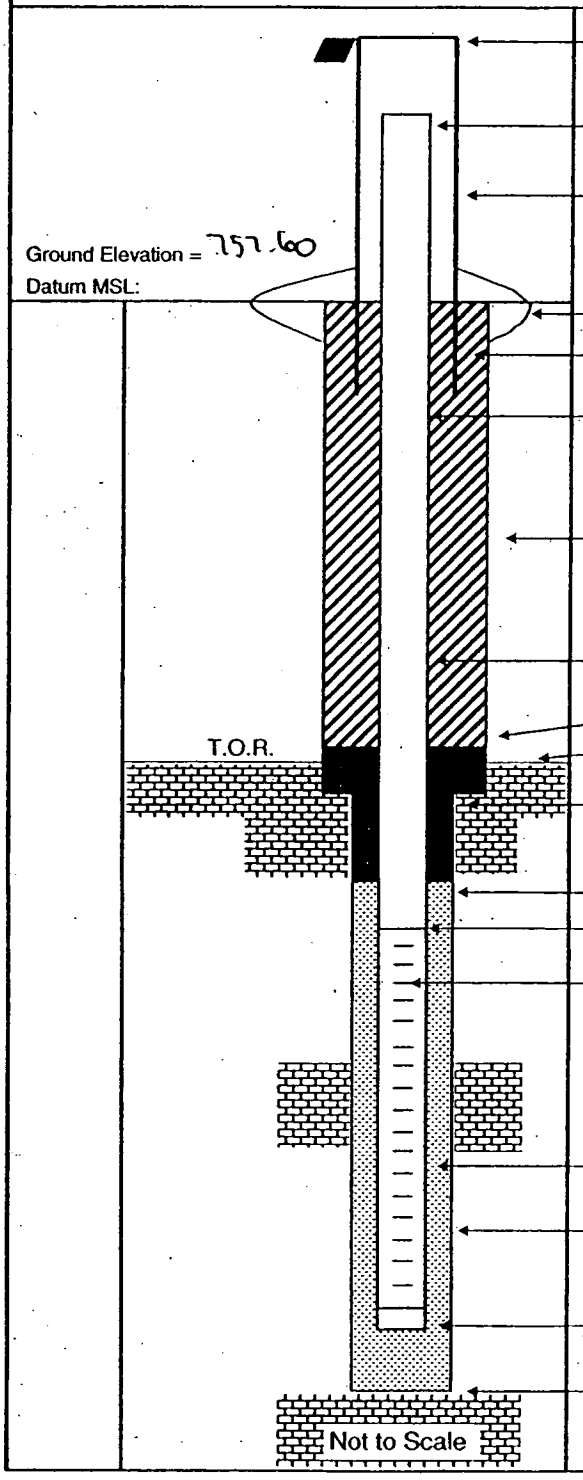

Elevation of Top of Casing: 760.98

Stick Up of Casing Above Ground Surface: 2.76

Elevation of Top of Riser: 760.36

I.D. of Surface Casing: 4" SQUARE

Type of Surface Casing: STEEL

Type of Surface Seal: 4'x4'x6" PAD

I.D. of Permanent Casing: NA

I.D. of Riser: 2"

Type of Riser: PVC

Borehole Diameter: 5"

Type of Backfill: CEMENT

Elevation / Depth Top of Seal: 755.6 / 2'

Elevation / Depth Top of Bedrock: 744.6 / 13'

Type of Seal: BENT. CHIPS

Elevation / Depth of Top of Filter Pack: 751.6 / 6'

Elevation / Depth of Top of Screen: 749.6 / 8'

Type of Screen: PVC

Slot Size x Length: .20 x 10'

I.D. of Screen: 2"

Type of Filter Pack: No. 20-40 SAND

Diameter of Hole in Bedrock:
Core / Ream: 5"

Elevation / Depth of Bottom of Screen: 739.6 / 18'

Elevation / Total Depth of Borehole: 739.6 / 18'

Tetra Tech NUS, Inc.

BORING LOG

PROJECT NAME: NSWC CRANE
PROJECT NUMBER: N9060 CTO 0279
DRILLING COMPANY: BOWSER MORNER
DRILLING RIG: ROTOSONIC

BORING NUMBER: 16MW103 / SB36
DATE: 4/10/03
GEOLOGIST: BOB BALKOVEC
DRILLER: DAVE S.

Sample No. and Type or RQD	Depth (Ft.) or Run No.	Blows / 6" or RQD (%)	Sample Recovery / Sample Length	Lithology Change (Depth /Ft.) or Screened Interval	MATERIAL DESCRIPTION: Soil Density/ Consistency or Rock Hardness	Color	Material Classification	USCS*	Remarks	PID/FID Reading (ppm): Sample	Sampler BZ	Borehole**	Driller BZ**
	1					LT.	CLAY 0-1'	CL	6" TO 3'	0.0			
	2					BR	SILTY SAND W/ SS FRAGS	SM					
	3					↓	(1'-3')	↓		↓			
	4		0884	4 = 11 = 5 = 4 = 11	HARD	YELL	3'-10.5 SANDSTONE	BR	THIN BEDDING	0.0			
	5					OR							
C-1	6												
C-1	7		70% RQD					MS	MASSIVE 5-8'				
	8												
	9		55%	6'									
	10				HARD	YELL OR	SANDSTONE	BR		0.0			
	11				BRITTLE	DK GRAY	10.5'-16' SHALE	VBR	HIGHLY FRACTURED				
	12								V.BR				
	13												
	14		51% RQD										
C-2	15		0845										
	16												
	17				SOFT TO	GRAY	16'-21' CLAYEY SHALE						
	18				BRITTLE								
	19		97%	16'	-DRY-								
	20					DK GRAY	CLAYEY SHALE			0.0			
	21				V.SOFT								
	22		47%		TO BRITTLE								
	23		RQD						V.WET FROM 24'				
C-3	24								TO 27'				
	25				WET - SOFT				WATER @ 25.5' AFTER BLOW OUT				

* When rock coring, enter rock brokeness.

** Include monitor reading in 6 foot intervals @ borehole. Increase reading frequency if elevated reponse read.

Remarks: 6" 0-3' 5" 3'-34'

Drilling Area Background (ppm): 0.0

Converted to Well: Yes X No _____ Well I.D. #: 16MW103

Tetra Tech NUS, Inc.

BORING LOG

PROJECT NAME: NSWC CRANE
PROJECT NUMBER: N9060 CTO 0279
DRILLING COMPANY: BOWSER MORNER
DRILLING RIG: ROTOSONIC

BORING NUMBER: 16MWT03 / SB36
DATE: 4/10/03
GEOLOGIST: BOB BALKOVEC
DRILLER: DAVE S.

Sample No. and Type or RQD	Depth (Ft.) or Run No.	Blows / 6" or RQD (%)	Sample Recovery / Sample Length	Lithology Change (Depth /Ft.) or Screened Interval	MATERIAL DESCRIPTION: Soil Density/ Consistency or Rock Hardness	Color	Material Classification	USCS *	Remarks	PID/FID Reading (ppm): Sample	Sampler BZ	Borehole**	Driller BZ**
	26		C0910		WET	DK	CLAYEY SHALE	VAR	WET	0.0			
	27				SOFT	GRAY							
	28				MOIST	DK GRAY	27-29' SHALE						
	29		9.5'/10'		STIFF								
	30						29-32 SHALE CLAYEY						
	31		46% RQD										
C4	32		C0943										
	33					BLK	COAL SEAM 32-33'						
	34		4.0'/5'			DK GRAY	SHALE						
				T.D. 34'			WELL SET @ 35 2" PVC		DRILLER SET				
							SCREENED 25-35'		WELL @ 35'				
							SAND TO 23'		OVERDRILLED.				
							BENT CHIPS TO 20'		DURING CLEANOUT				
							VOL. CLAY TO 2'						

* When rock coring, enter rock brokeness.

** Include monitor reading in 6 foot intervals @ borehole. Increase reading frequency if elevated reponse read.

Remarks:

Drilling Area Background (ppm): 0.0

Converted to Well: Yes X No ____ Well I.D. #: 16MWT03

Tetra Tech NUS, Inc.

BEDROCK
MONITORING WELL SHEET

WELL No.: 16MW103

PERMIT No:

PROJECT:	NSWC CRANE	DRILLING Co.:	BOWSER MORNER	BORING No.:	16MW103/5036
PROJECT No.:	9060 CTO 0279	DRILLER:	DAVE S.	DATE COMPLETED:	4/10/03
SITE:	SWMU 16	DRILLING METHOD:	ROTOSONIC	NORTHING:	1320946.468
GEOLOGIST:	B. BALKOVEC	DEV. METHOD:	WATTERA	EASTING:	3032559.16

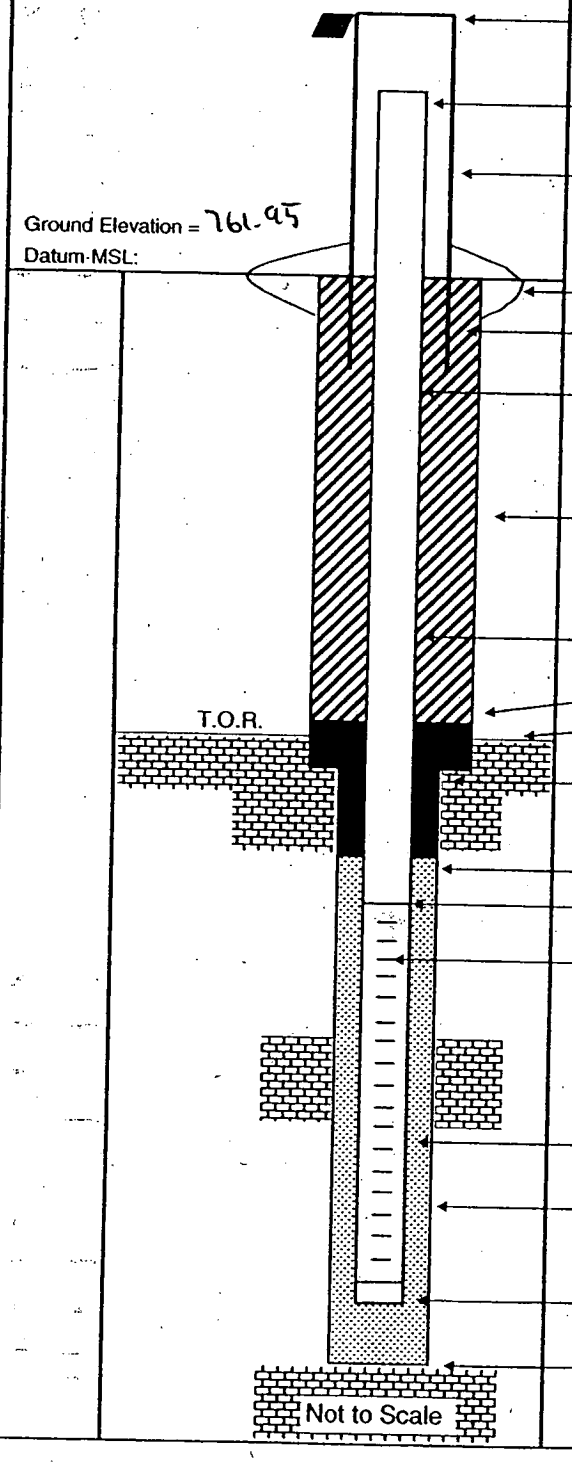

Elevation of Top of Casing: 764.96

Stick Up of Casing Above Ground Surface: 2.46

Elevation of Top of Riser: 764.41

I.D. of Surface Casing: 4" SQUARE

Type of Surface Casing: STEEL

Type of Surface Seal: 4'x4'x6" PAD

I.D. of Permanent Casing: NA

I.D. of Riser: 2"

Type of Riser: PVC

Borehole Diameter: 5"

Type of Backfill: VOL CLAY

Elevation / Depth Top of Seal: 741.95 / 20'

Elevation / Depth Top of Bedrock: 758.95 / 3'

Type of Seal: BENT CHIPS

Elevation / Depth of Top of Filter Pack: 738.95 / 23'

Elevation / Depth of Top of Screen: 736.95 / 25'

Type of Screen: PVC

Slot Size x Length: .20 x 10'

I.D. of Screen: 2"

Type of Filter Pack: No. 20-40 SAND

Diameter of Hole in Bedrock: Core / Ream: 5"

Elevation / Depth of Bottom of Screen: 726.95 / 35'

Elevation / Total Depth of Borehole: 726.95 / 35'

Tetra Tech NUS, Inc.

BORING LOG

PROJECT NAME: NSWC CRANE
PROJECT NUMBER: N9060 CTO 0279
DRILLING COMPANY: BOWSER MORNER
DRILLING RIG: ROTOSONIC

BORING NUMBER: 16MW104
DATE: 4/8/03 - 4/9/03
GEOLOGIST: BOB BALKOVEC
DRILLER: DAVE S.

Sample No. and Type or RQD	Depth (Ft.) or Run No.	Blows / 6" or RQD (%)	Sample Recovery / Sample Length	Lithology Change (Depth /Ft.) or Screened Interval	MATERIAL DESCRIPTION: Soil Density/ Consistency or Rock Hardness	Color	Material Classification	USCS*	Remarks	PID/FID Reading (ppm): Sample	Sampler BZ	Borehole**	Driller BZ**
	1				MUSSL & SOFT	BR	.5' TOP SOIL	TM		0.0			
	2				MUSSL	LT GRAY	.5'-3' CLAY	CL					
	3				STIFF	& YELLOW							
S-1 1540	4		4' / 4'		DRY & SOFT		3'-8.5' SANDSTONE	BR	ROCK @ 3'				
S-2 1546	5		1' / 7'		HARD				REFUSAL @ 5'	0.0			
	6					RED	SANDSTONE		MODERATE WEATH.				
	7		64% RQD						LIGHT. FRACT.				
C-1	8		@1615										
	9				SOFT	RED &	SILTY SANDSTONE 8.5'-9'	BR	HIGHLY FRACTURED				
	10		47 / 5'		HARD	LT GRAY	SANDSTONE 9'-18'						
	11				HARD &	RED			HIGHLY FRACT.				
4/8	12					& BR							
	13												
	14		47% RQD										
C-2	15		1628										
	16												
	17												
	18								POSS SAT @ 18'				
	19				SOFT	DK GRAY	SHALE 18'-25'		FLUSH OUT HOLE.				
	20		96 / 10'						LET SIT OVERNIGHT				
	21					DK	SHALY MATERIAL	BR	CONTINUOUS TO 20'				
4/9	22					GRAY	IN CUTTINGS						
R-1	23								WL = 15' BGS				
	24								@ 0738				
	25		0800	TD 25									

* When rock coring, enter rock brokeness.

** Include monitor reading in 6 foot intervals @ borehole. Increase reading frequency if elevated reponse read.

Drilling Area Background (ppm): 0.0

Remarks: 6" 0-4' 5" CORE 4'-20' 5" REAM 20'-25'
WELL SET @ 25' SAND TO 13' BENT TO 12' VOLCLAY TO 2'

Converted to Well: Yes X No ___ Well I.D. #: 16MW104

Tetra Tech NUS, Inc.

BEDROCK
MONITORING WELL SHEET

WELL No.: 16MWT04

PERMIT No:

PROJECT:	NSWC CRANE	DRILLING Co.:	BOWSER MORNER	BORING No.:	16MWT04
PROJECT No.:	9060 CTO 0279	DRILLER:	DAVE S.	DATE COMPLETED:	4/9/03
SITE:	SWMU 16	DRILLING METHOD:	ROTOSONIC	NORTHING:	1321003.281
GEOLOGIST:	B. BALKOVEC	DEV. METHOD:	WATTERA	EASTING:	3032946.466

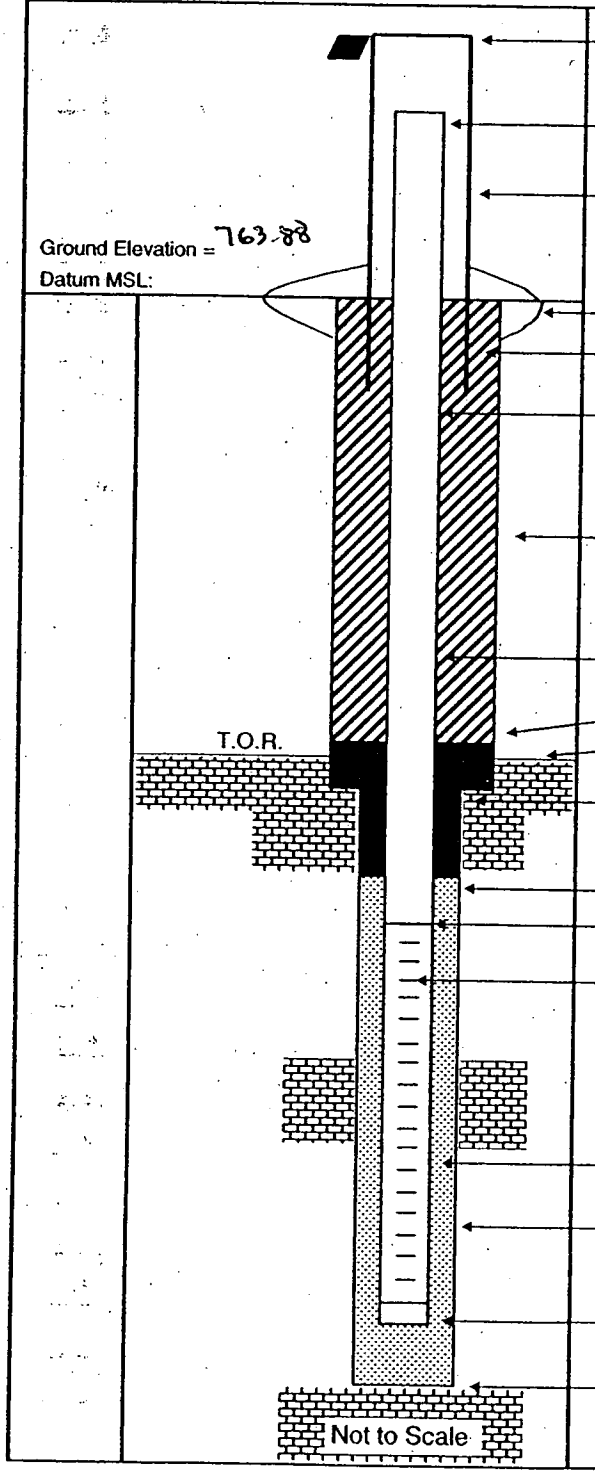

Elevation of Top of Casing: 766.21

Stick Up of Casing Above Ground Surface: 2.26

Elevation of Top of Riser: 766.14

I.D. of Surface Casing: 4" SQUARE

Type of Surface Casing: STEEL

Type of Surface Seal: 4'x4'x6" PAD

I.D. of Permanent Casing: NA

I.D. of Riser: 2"

Type of Riser: PVC

Borehole Diameter: 5"

Type of Backfill: CEMENT 0-2' VOLCLAY 2-12'

Elevation / Depth Top of Seal: 751.88 / 12'

Elevation / Depth Top of Bedrock: 760.88 / 3'

Type of Seal: BENT CHIPS

Elevation / Depth of Top of Filter Pack: 750.88 / 13'

Elevation / Depth of Top of Screen: 748.88 / 15'

Type of Screen: PVC

Slot Size x Length: .20 x 10'

I.D. of Screen: 2"

Type of Filter Pack: No. 20-40 SAND

Diameter of Hole in Bedrock: Core / Ream: 5"

Elevation / Depth of Bottom of Screen: 738.88 / 25'

Elevation / Total Depth of Borehole: 738.88 / 25'

Tetra Tech NUS, Inc.

BORING LOG

PROJECT NAME: NSWC CRANE
PROJECT NUMBER: N9060 CTO 0279
DRILLING COMPANY: BOWSER MORNER
DRILLING RIG: ROTOSONIC

BORING NUMBER: 16MW105 / SB26
DATE: 4/9/03
GEOLOGIST: BOB BALKOVEC
DRILLER: DAVES

Sample No. and Type or RQD	Depth (Ft.) or Run No.	Blows / 6" or RQD (%)	Sample Recovery / Sample Length	Lithology Change (Depth /Ft.) or Screened Interval	MATERIAL DESCRIPTION: Soil Density/ Consistency or Rock Hardness	Color	Material Classification	USCS *	Remarks	PID/FID Reading (ppm): Sample	Sampler BZ	Borehole**	Driller BZ**
	1				MOIST	BR	0-1' CLAY	CL		0.0			
	2				M. STIFF		1'-4' SILTY SAND w/	SM					
	3						SS FRAGS						
SM	4								6" to 4"				
	5				HARD	LT BR	4'-6' SANDSTONE	BR		0.0			
	6				DRY								
C-1	7		60% RQD		HARD	LT	6'-8.5' SILTY STONE	VAR					
	8		@1320			GRAY							
	9		4.8' / 5'			GRAY	8.5'-9' SANDSTONE	MS					
	10				SOFT TO	LT	9'-12' CLAYEY SHALE	BR		0.0			
	11				STIFF	GRAY							
	12												
	13				LOOSE	BLK	COAL SEAM 12-12.5'						
C-2	14		@1335		HARD	LT GRAY	SANDSTONE 12.5'-14'	MS					
	15				SOFT TO	DK GRAY	SHALE (14'-40')	VAR		0.0			
	16		47%		BRITTLE	BR	SANDY FROM 15'-16.5'						
	17		RQD										
	18					BLK	SHALE 16.5'-19'						
	19		9.5' / 10'			DK GRAY							
	20				SOFT TO	LT	19-25' SHALE & CLAYEY 14			0.0			
	21				BRITTLE	DK							
	22					GRAY							
	23												
C-3	24												
	25												

* When rock coring, enter rock brokeness.

** Include monitor reading in 6 foot intervals @ borehole. Increase reading frequency if elevated reponse read.

Drilling Area Background (ppm): 0.0

Remarks:

Converted to Well: Yes X No _____ Well I.D. #: 16MW105

Tetra Tech NUS, Inc.

BORING LOG

PROJECT NAME: NSWC CRANE
PROJECT NUMBER: N9060 CTO 0279
DRILLING COMPANY: BOWSER MORNER
DRILLING RIG: ROTOSONIC

BORING NUMBER: 16MW105/SB26
DATE: 4/9/03
GEOLOGIST: BOB BALKOVEC
DRILLER: DAVE S.

Sample No. and Type or RQD	Depth (Ft.) or Run No.	Blows / 6" or RQD (%)	Sample Recovery / Sample Length	Lithology Change (Depth /Ft.) or Screened Interval	MATERIAL DESCRIPTION: Soil Density/ Consistency or Rock Hardness	Color	Material Classification	USCS*	Remarks	PID/FID Reading (ppm): Sample	Sampler BZ	Borehole**	Driller BZ**
	26		@1354		SOFT TO	GY	SHALE 25'-40'	BR		0.0			
	27		37%		BRITTLE	DK							
	28		RQD			GRAY							
	29												
	30		42'/40'										
	31				SOFT TO		SHALE:	BR	V. SOFT @ 31'				
	32				BRITTLE		- CLAYEY 30-32'		POSS WATER				
	33		45%						V. WET 30-36'				
	34		RQD										
C-4	35		@1445										
	36												
	37												
	38						THIN COAL SEAM 37'-37.4'						
	39							VBR					
	40		42'/40'										
							WELL SET @ 39' 2" PVC						
							SAND TO 27'						
							BENT CHIPS TO 25'						
							VOL-CLAY TO '						

* When rock coring, enter rock brokeness.

** Include monitor reading in 6 foot intervals @ borehole. Increase reading frequency if elevated reponse read.

Remarks:

Drilling Area Background (ppm): 0.0

Converted to Well: Yes X No ____ Well I.D. #: 16MW105

Tetra Tech NUS, Inc.

BEDROCK MONITORING WELL SHEET

WELL No.: 16MW105

PERMIT No:

PROJECT:	NSWC CRANE	DRILLING Co.:	BOWSER MORNER	BORING No.:	16MW105/SB26
PROJECT No.:	9060 CTO 0279	DRILLER:	DAVES	DATE COMPLETED:	4/9/03
SITE:	SWMU 16	DRILLING METHOD:	ROTOSONIC	NORTHING:	[redacted] 1320741.793
GEOLOGIST:	B. BALKOVEC	DEV. METHOD:	WHALE PUMP	EASTING:	[redacted] 3032812.77

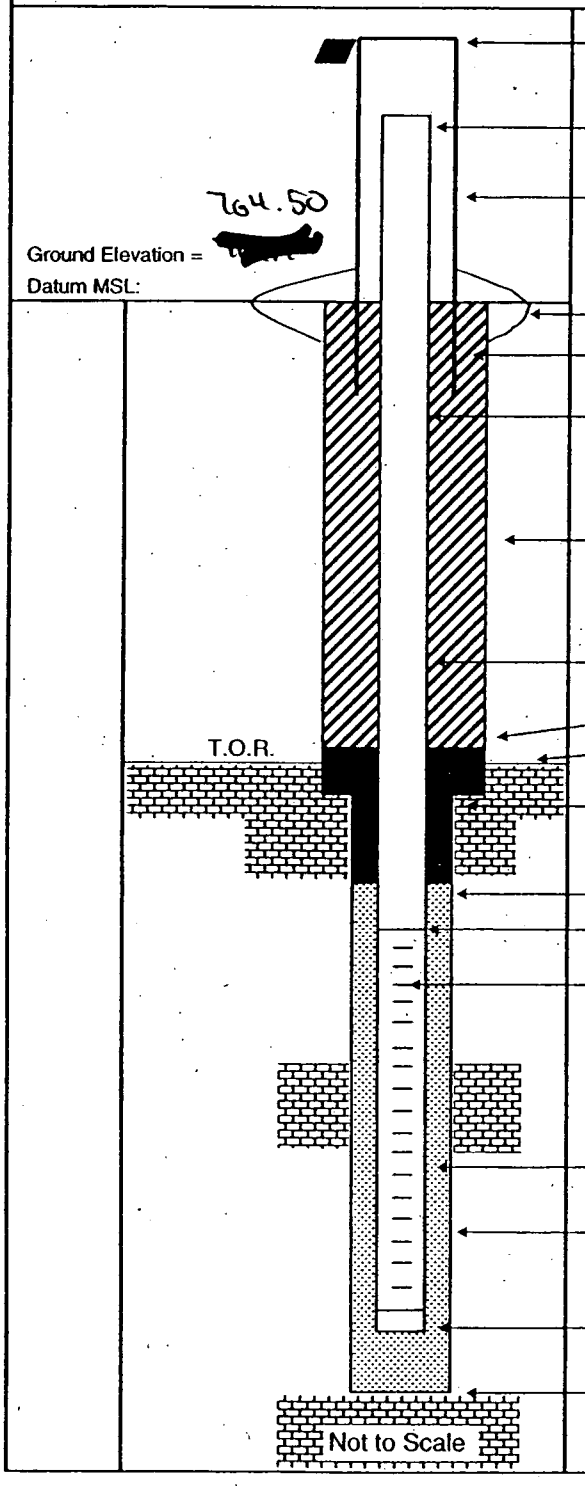

Elevation of Top of Casing: [redacted] 767.45

Stick Up of Casing Above Ground Surface: 2.38

Elevation of Top of Riser: [redacted] 766.88

I.D. of Surface Casing: 4" SQUARE

Type of Surface Casing: STEEL

Type of Surface Seal: 4'x4'x6" PAD

I.D. of Permanent Casing: NA

I.D. of Riser: 2"

Type of Riser: PVC

Borehole Diameter: 5"

Type of Backfill: VOL CLAY (0-25')

Elevation / Depth Top of Seal: 739.5 / 25'

Elevation / Depth Top of Bedrock: 760.5 / 4'

Type of Seal: BENT CHIPS

Elevation / Depth of Top of Filter Pack: 737.5 / 27'

Elevation / Depth of Top of Screen: 735.5 / 29'

Type of Screen: PVC

Slot Size x Length: .20 x 10'

I.D. of Screen: 2"

Type of Filter Pack: No. 20-40 SAND

Diameter of Hole in Bedrock: (Core) / Ream: 5"

Elevation / Depth of Bottom of Screen: 725.5 / 39'

Elevation / Total Depth of Borehole: 724.5 / 40'

Tetra Tech NUS, Inc.

BORING LOG

PROJECT NAME: NSWC CRANE
PROJECT NUMBER: N9060 CTO 0279
DRILLING COMPANY: BOWSER MORNER
DRILLING RIG: ROTOSONIC

BORING NUMBER: 16MW106
DATE: 4/24/03
GEOLOGIST: BOB BALKOVEC
DRILLER: DENNIS SZAK.

Sample No. and Type or RQD	Depth (Ft.) or Run No.	Blows / 6" or RQD (%)	Sample Recovery / Sample Length	Lithology Change (Depth /Ft.) or Screened Interval	MATERIAL DESCRIPTION: Soil Density/ Consistency or Rock Hardness	Color	Material Classification	USCS *	Remarks	PID/FID Reading (ppm): Sample	Sampler BZ	Borehole**	Driller BZ**
	1						REFER TO 16MW101						
							FOR COMPLETE						
							LITH. DETAILS						
	5												
	10												
	15												
							16 FT U-WET						
							CUTTINGS						
	20						SET WELL @ 25' 2" PVC						
							SCREENED 15'-25'						
	25												

* When rock coring, enter rock brokeness.

** Include monitor reading in 6 foot intervals @ borehole. Increase reading frequency if elevated reponse read.

Remarks:

Drilling Area Background (ppm):

Converted to Well: Yes X No

Well I.D. #: 16MW106

Tetra Tech NUS, Inc.

BEDROCK MONITORING WELL SHEET

WELL No.: 16MW706

PERMIT No:

PROJECT:	NSWC CRANE	DRILLING Co.:	BOWSER MORNER	BORING No.:	16MW706
PROJECT No.:	9060 CTO 0279	DRILLER:	DENNIS SPAK	DATE COMPLETED:	4/24/03
SITE:	SWMU 16	DRILLING METHOD:	[redacted]	NORTHING:	1321199.519
GEOLOGIST:	B. BALKOVEC	DEV. METHOD:	WATTERA	EASTING:	3032883.373

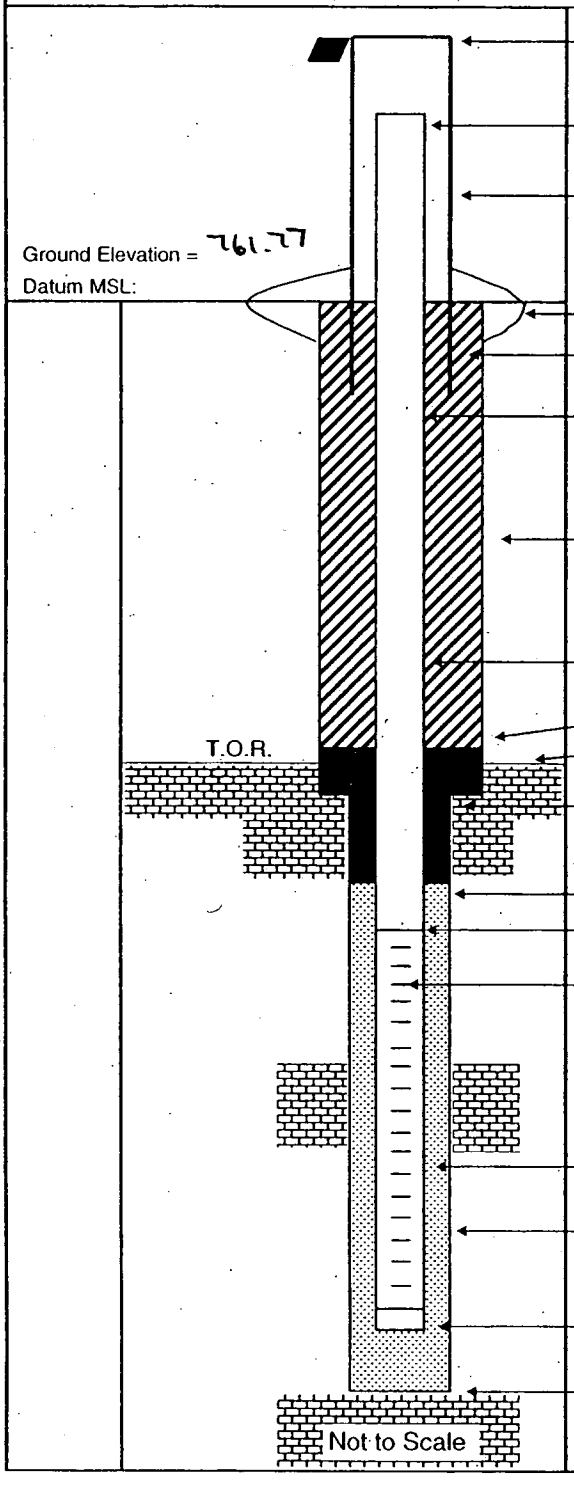

Elevation of Top of Casing: 764.85

Stick Up of Casing Above Ground Surface: 2.67

Elevation of Top of Riser: 764.44

I.D. of Surface Casing: 4" SQUARE

Type of Surface Casing: NA

Type of Surface Seal: 4'x4'x6" PAD

I.D. of Permanent Casing: NA

I.D. of Riser: 2"

Type of Riser: PVC

Borehole Diameter: 6"

Type of Backfill: VOL CLAY 11'-2'

Elevation / Depth Top of Seal: 750.77 / 11'

Elevation / Depth Top of Bedrock: 753.77 / 8'

Type of Seal: BENT CHIPS

Elevation / Depth of Top of Filter Pack: 748.77 / 13'

Elevation / Depth of Top of Screen: 746.77 / 15'

Type of Screen: PVC

Slot Size x Length: .20 x 10'

I.D. of Screen: 2"

Type of Filter Pack: No. 20-40 SAND

Diameter of Hole in Bedrock:
Core / Ream: 6"

Elevation / Depth of Bottom of Screen: 736.77 / 25'

Elevation / Total Depth of Borehole: 736.77 / 25'

Tetra Tech NUS, Inc.

BORING LOG

PROJECT NAME: NSWC CRANE
PROJECT NUMBER: N9060 CTO 0279
DRILLING COMPANY: BOWSER MORNER
DRILLING RIG: GEOPROBE 54LT

BORING NUMBER: 16SB01
DATE: 3-27-03
GEOLOGIST: M. G. COCHRAN
DRILLER: J. AKERS

Sample No. and Type or RQD	Depth (Ft.) or Run No.	Blows / 6" or RQD (%)	Sample Recovery / Sample Length	Lithology Change (Depth /Ft.) or Screened Interval	MATERIAL DESCRIPTION: Soil Density/ Consistency or Rock Hardness	Color	Material Classification	USCS*	Remarks	PID/FID Reading (ppm): Sample	Sampler BZ	Borehole**	Driller BZ**
S1	1		1.0/1.0			BL	ASPHALT + GRAVEL			1.7	1.7	1.7	1.7
S2	2		2.8/			GR BRN	CLAYEY SILT		DAMP, FILL MOTTLED 2-4'	1.7	1.7	1.7	1.7
	3		3.0										
	4					BRN	CLAYEY SILT			1.7	1.7	1.7	1.7
S3	5												
	6						REFUSAL @ 6'						
	7												
	8												
	9												
	10												
	11												
	12												
	13												
	14												
	15												
						SAMPLED	16SS010002 @ 0845						
						SAMPLED	16SB010406 @ 0900						

* When rock coring, enter rock brokeness.

** Include monitor reading in 6 foot intervals @ borehole. Increase reading frequency if elevated reponse read.

Remarks: GEOPROBE MACRO CORE

Drilling Area Background (ppm): 1.7

Converted to Well: Yes ____ No ✓ Well I.D. #: ____

Tetra Tech NUS, Inc.

BORING LOG

PROJECT NAME: NSWC CRANE
PROJECT NUMBER: N9060 CTO 0279
DRILLING COMPANY: BOWSER MORNER
DRILLING RIG: GEOPROBE 54LT

BORING NUMBER: 16SB02
DATE: 3-27-03
GEOLOGIST: MG COCHRAN
DRILLER: JAKERS

Sample No. and Type or RQD	Depth (Ft.) or Run No.	Blows / 6" or RQD (%)	Sample Recovery / Sample Length	Lithology Change (Depth /Ft.) or Screened Interval	MATERIAL DESCRIPTION: Soil Density/ Consistency or Rock Hardness	Color	Material Classification	USCS*	Remarks	PID/FID Reading (ppm): Sample	Sampler BZ	Borehole**	Driller BZ**
S1	1		3.7/	1.0		BL	ASPHALT			1.7	1.7	1.7	1.7
	2		4.0			BRN	CLAYEY SILT	ML	DAMP				
	3								FILL				
	4												
S2	5		2.6/			GR-BRN	SILTY SAND	SM	DAMP	1.7	1.7	1.7	1.7
	6		2.0						SS FRAG IN BTM.				
	7						REFUSAL @ 6'		WEATHERED SS IN BTM.				
	8												
	9												
	10												
	11												
	12												
	13												
	14												
	15												
						SAMPLED 16SS02 0002							
						@ 905							
						SAMPLED 16 SB 02 0406							
						@ 915							

* When rock coring, enter rock brokeness.

** Include monitor reading in 6 foot intervals @ borehole. Increase reading frequency if elevated reponse read.

Remarks: GEO PROBE 54 LT

Drilling Area Background (ppm): 1.7

Converted to Well: Yes ____ No ✓ Well I.D. #: ____

Tetra Tech NUS, Inc.

BORING LOG

PROJECT NAME: NSWC CRANE
PROJECT NUMBER: N9060 CTO 0279
DRILLING COMPANY: BOWSER MORNER
DRILLING RIG: GEOPROBE 54LI

BORING NUMBER: 16SB03
DATE: 3-27-03
GEOLOGIST: M G. COCHRAN
DRILLER: J. AKERS

Sample No. and Type or RQD	Depth (FL) or Run No.	Blows / 6" or RQD (%)	Sample Recovery / Sample Length	Lithology Change (Depth /FL) or Screened Interval	MATERIAL DESCRIPTION: Soil Density/ Consistency or Rock Hardness	Color	Material Classification	USCS*	Remarks	PID/FID Reading (ppm): Sample	Sampler BZ	Borehole**	Driller BZ**
S1	1		1.7/			BL	ASPHALT		REFUSAL @ 2' FIRST TRY	1.7	1.7	1.7	1.7
	2		2.0			RD BRN	CLAYEY SILT		REFUSAL 2ND TRY SS FRAG				
	3						TD 2.0		IN BTM - MOVE HOLE 2'				
	4								REFUSAL @ 2' DAMP @ BTM FILL				
	5								NO SUB. SPL TAKEN				
	6												
	7												
	8												
	9												
	10												
	11												
	12												
	13												
	14												
	15												
						SAMPLED	16SS030002						
						@	940						
						SAMPLED	NO SUB SPL						
						@	TAKEN						

* When rock coring, enter rock brokeness.

** Include monitor reading in 6 foot intervals @ borehole. Increase reading frequency if elevated reponse read.

Remarks:

Drilling Area Background (ppm): 1.7

Converted to Well: Yes ____ No ✓ Well I.D. #: ____

Tetra Tech NUS, Inc.

BORING LOG

PROJECT NAME: NSWC CRANE
PROJECT NUMBER: N9060 CTO 0279
DRILLING COMPANY: BOWSER MORNER
DRILLING RIG: GEOPROBE 54LT

BORING NUMBER: 16SB04
DATE: 3-27-03
GEOLOGIST: M. G. COCHRAN
DRILLER: J. AKERS

Sample No. and Type or RQD	Depth (FL) or Run No.	Blows / 6" or RQD (%)	Sample Recovery / Sample Length	Lithology Change (Depth /FL) or Screened Interval	MATERIAL DESCRIPTION: Soil Density/ Consistency or Rock Hardness	Color	Material Classification	USCS*	Remarks	PID/FID Reading (ppm): Sample	Sampler BZ	Borehole**	Driller BZ**
S1	1		1.7/	1.0		BL	ASPHALT + GRAVEL			1.7	1.7	1.7	1.7
	2		2.5			BRN	CLAYEY SILT	ML	DAMP, FILL	↓	↓	↓	↓
	3						REFUSAL @ 2.5						
	4												
	5												
	6												
	7												
	8												
	9												
	10												
	11												
	12												
	13												
	14												
	15												
						SAMPLED 16SS04000Z @ 1000							
						SAMPLED NO SUBSURFACE @ SPL TAKEN							

* When rock coring, enter rock brokeness.

** Include monitor reading in 6 foot intervals @ borehole. Increase reading frequency if elevated reponse read.

Remarks:

Drilling Area Background (ppm): 1.7

Converted to Well: Yes ____ No ✓ Well I.D. #: ____

Tetra Tech NUS, Inc.

BORING LOG

PROJECT NAME: NSWC CRANE
PROJECT NUMBER: N9060 CTO 0279
DRILLING COMPANY: BOWSER MORNER
DRILLING RIG: GEOPROBE 54LT

BORING NUMBER: 16SB05
DATE: 3-27-03
GEOLOGIST: M. G COCHRAN
DRILLER: J. AKERS

Sample No. and Type or RQD	Depth (FL) or Run No.	Blows / 6" or RQD (%)	Sample Recovery / Sample Length	Lithology Change (Depth /FL) or Screened Interval	MATERIAL DESCRIPTION: Soil Density/ Consistency or Rock Hardness	Color	Material Classification	USCS*	Remarks	PID/FID Reading (ppm): Sample	Sampler BZ	Borehole**	Driller BZ**
S1	1			1.0		BL	ASPHALT		TOOK 2 CORES FOR	1.7	1.7	1.7	1.7
	2					RD BRN	CLAYEY SILT	ML	DAMP	↓	↓	↓	↓
	3						REFUSAL @ 2'						
	4												
	5												
	6												
	7												
	8												
	9												
	10												
	11												
	12												
	13												
	14												
	15												
						SAMPLED 16SS050002 @ 1035							
						SAMPLED NO SUBSURFACE @ SPL TAKEN							

* When rock coring, enter rock brokeness.

** Include monitor reading in 6 foot intervals @ borehole. Increase reading frequency if elevated reponse read.

Remarks:

Drilling Area Background (ppm): 1.7

Converted to Well: Yes ____ No ✓ Well I.D. #: ____

Tetra Tech NUS, Inc.

BORING LOG

PROJECT NAME: NSWC CRANE
PROJECT NUMBER: N9060 CTO 0279
DRILLING COMPANY: BOWSER MORNER
DRILLING RIG: GEOPROBE 54LT

BORING NUMBER: 165B06
DATE: 3-27-03
GEOLOGIST: M. G. COCHRAN
DRILLER: J AKERS

Sample No. and Type or RQD	Depth (Ft.) or Run No.	Blows / 6" or RQD (%)	Sample Recovery / Sample Length	Lithology Change (Depth /Ft.) or Screened Interval	MATERIAL DESCRIPTION: Soil Density/ Consistency or Rock Hardness	Color	Material Classification	USCS*	Remarks	PID/FID Reading (ppm): Sample	Sampler BZ	Borehole**	Driller BZ**
S1	1			1.0		BL	ASPHALT		TOOK 3 CORES FOR SPL. VOL.	1.7	1.7	1.7	1.7
	2					BRN	CLAYEY SILT	ML	DAMP, FILL	↓	↓	↓	↓
	3						REFUSAL @ 2.5'						
	4												
	5												
	6												
	7												
	8												
	9												
	10												
	11												
	12												
	13												
	14												
	15												
						SAMPLED	165S06.0002 @ 1055						
						SAMPLED	NO SUBSURFACE @ SPL TAKEN						

* When rock coring, enter rock brokeness.

** Include monitor reading in 6 foot intervals @ borehole. Increase reading frequency if elevated reponse read.

Remarks:

Drilling Area Background (ppm): 1.7

Converted to Well: Yes ____ No ✓ Well I.D. #: ____

Tetra Tech NUS, Inc.

BORING LOG

PROJECT NAME: NSWC CRANE
PROJECT NUMBER: N9060 CTO 0279
DRILLING COMPANY: BOWSER MORNER
DRILLING RIG: GEOPROBE 54 LT

BORING NUMBER: 16SB07
DATE: 3-27-03
GEOLOGIST: M. G. COCHRAN
DRILLER: J. AKERS

Sample No. and Type or RQD	Depth (FL) or Run No.	Blows / 6" or RQD (%)	Sample Recovery / Sample Length	Lithology Change (Depth /FL) or Screened Interval	MATERIAL DESCRIPTION: Soil Density/ Consistency or Rock Hardness	Color	Material Classification	USCS*	Remarks	PID/FID Reading (ppm): Sample	Sampler BZ	Borehole**	Driller BZ**
S1	1		1.4/	1.0		BL	ASPHALT		TOOK 3 CORES FOR SPL. VOL.	1.7	1.7	1.7	1.7
	2		2.0			BRN	CLAYEY SILT	ML	DAMP. FILL	↓	↓	↓	↓
	3						REFUSAL @ 2.0						
	4												
	5												
	6												
	7												
	8												
	9												
	10												
	11												
	12												
	13												
	14												
	15												
						SAMPLED	16SS070002						
						@	1100						
						SAMPLED	NO SUBSURFACE						
						@	SPL TAKEN						

* When rock coring, enter rock brokeness.

** Include monitor reading in 6 foot intervals @ borehole. Increase reading frequency if elevated reponse read.

Remarks:

Drilling Area Background (ppm): 1.7

Converted to Well: Yes ____ No ✓ Well I.D. #: ____

Tetra Tech NUS, Inc.

BORING LOG

PROJECT NAME: NSWC CRANE
PROJECT NUMBER: N9060 CTO 0279
DRILLING COMPANY: BOWSER MORNER
DRILLING RIG: GEOPROBE 54LT

BORING NUMBER: 16SB08
DATE: 3-27-03
GEOLOGIST: M. G. COCHRAN
DRILLER: J. AKERS

Sample No. and Type or RQD	Depth (Ft.) or Run No.	Blows / 6" or RQD (%)	Sample Recovery / Sample Length	Lithology Change (Depth /Ft.) or Screened Interval	MATERIAL DESCRIPTION: Soil Density/ Consistency or Rock Hardness	Color	Material Classification	USCS*	Remarks	PID/FID Reading (ppm): Sample	Sampler BZ	Borehole**	Driller BZ**
	1			1.0		GR.	GRAVEL.		TOOK 3 CORES FOR SPL VOL	1.7	1.7	1.7	1.7
	2					BRN	SILTY SAND	SM	SS FRAGS IN SPL. DAMP,	↓	↓	↓	↓
	3						REFUSAL @ 1.5'		FILL				
	4												
	5												
	6												
	7												
	8												
	9												
	10												
	11												
	12												
	13												
	14												
	15												
						SAMPLED	16SS08000Z						
						@	1330						
						SAMPLED	NO SUBSURFACE						
						@	SPL TAKEN						

* When rock coring, enter rock brokeness.

** Include monitor reading in 6 foot intervals @ borehole. Increase reading frequency if elevated reponse read.

Remarks:

Drilling Area Background (ppm): 1.7

Converted to Well: Yes ____ No ✓ Well I.D. #: ____

Tetra Tech NUS, Inc.

BORING LOG

PROJECT NAME: NSWC CRANE
PROJECT NUMBER: N9060 CTO 0279
DRILLING COMPANY: BOWSER MORNER
DRILLING RIG: GEOPROBE 54 LT

BORING NUMBER: 16SB09
DATE: 3-27-03
GEOLOGIST: M. G. COCHRAN
DRILLER: J. AKERS

Sample No. and Type or RQD	Depth (FL) or Run No.	Blows / 6" or RQD (%)	Sample Recovery / Sample Length	Lithology Change (Depth /FL) or Screened Interval	Soil Density/ Consistency or Rock Hardness	Color	Material Classification	USCS*	Remarks	PID/FID Reading (ppm) Sample	Sampler BZ	Borehole**	Driller BZ**
	1		1.31	.5		DKBR	TOPSOIL		TOOK 4 CORES				
						RDBRN	CLAYEY SILT	ML	FOR SPL VOL	1.6	1.6	1.6	1.6
	2		2.0							↓	↓	↓	↓
									SS FRAGS BTM				
	3						REFUSAL @ 2'		DAMP, FILL				
	4												
	5												
	6												
	7												
	8												
	9												
	10												
	11												
	12												
	13												
	14												
	15												
						SAMPLED	16SS090002						
						@	1355						
						SAMPLED	NO SUBSURFACE						
						@	SPL TAKEN						

* When rock coring, enter rock brokeness.

** Include monitor reading in 6 foot intervals @ borehole. Increase reading frequency if elevated reponse read.

Remarks: FD 03270301 COLLECTED

Drilling Area Background (ppm): 1.6

Converted to Well: Yes ____ No ✓ Well I.D. #: ____

Tetra Tech NUS, Inc.

BORING LOG

PROJECT NAME: NSWC CRANE
PROJECT NUMBER: N9060 CTO 0279
DRILLING COMPANY: BOWSER MORNER
DRILLING RIG: GEOPROBE 54LT

BORING NUMBER: 16SB10
DATE: 3-27-03
GEOLOGIST: MG COCHRAN
DRILLER: J AKERS

Sample No. and Type or RQD	Depth (Ft.) or Run No.	Blows / 6" or RQD (%)	Sample Recovery / Sample Length	Lithology Change (Depth /Ft.) or Screened Interval	MATERIAL DESCRIPTION: Soil Density/ Consistency or Rock Hardness	Color	Material Classification	USCS *	Remarks	PID/FID Reading (ppm): Sample	Sampler BZ	Borehole**	Driller BZ**
S1	1		1.3/	.5		DKBR	TOPSOIL		TOOK 3 CORES	1.6	1.6	1.6	1.6
						RDBN	CLAYEY SILT	ML	FOR SPL VOL.				
	2		2.0						DAMP. FILL	↓	↓	↓	↓
									SS FRAG BTM.				
	3						REFUSAL @ 2'						
	4												
	5												
	6												
	7												
	8												
	9												
	10												
	11												
	12												
	13												
	14												
	15												
						SAMPLED	16SS100002						
						@	1400						
						SAMPLED	NO SUBSURFACE						
						@	SPL TAKEN						

* When rock coring, enter rock brokeness.

** Include monitor reading in 6 foot intervals @ borehole. Increase reading frequency if elevated reponse read.

Remarks:

Drilling Area Background (ppm): 1.6

Converted to Well: Yes ____ No ✓ Well I.D. #: ____

Tetra Tech NUS, Inc.

BORING LOG

PROJECT NAME: NSWC CRANE
PROJECT NUMBER: N9060 CTO 0279
DRILLING COMPANY: BOWSER MORNER
DRILLING RIG: GEOPROBE 54LT

BORING NUMBER: 16SB11
DATE: 3-27-03
GEOLOGIST: M.G. COCHRAN
DRILLER: JAKERS

Sample No. and Type or RQD	Depth (Ft.) or Run No.	Blows / 6" or RQD (%)	Sample Recovery / Sample Length	Lithology Change (Depth /Ft.) or Screened Interval	MATERIAL DESCRIPTION: Soil Density/ Consistency or Rock Hardness	Color	Material Classification	USCS *	Remarks	PID/FID Reading (ppm): Sample	Sampler BZ	Borehole**	Driller BZ**
	1		3.1			RD BRN	CLAYEY SILT	ML	DAMP, FILL	1.5	1.5	1.5	1.5
S1	2		4.0							↓	↓	↓	↓
	3												
	4		0						NO RECOVERY				
S2	5		1				REFUSAL @ 5'						
	6												
	7												
	8												
	9												
	10												
	11												
	12												
	13												
	14												
	15												
						SAMPLED 16SS110002 @ 1515							
						SAMPLED 16SB110204 @ 1520							

* When rock coring, enter rock brokeness.

** Include monitor reading in 6 foot intervals @ borehole. Increase reading frequency if elevated reponse read.

Remarks:

Drilling Area Background (ppm): 1.5

Converted to Well: Yes ____ No ✓ Well I.D. #: ____

Tetra Tech NUS, Inc.

BORING LOG

PROJECT NAME: NSWC CRANE
PROJECT NUMBER: N9060 CTO 0279
DRILLING COMPANY: BOWSER MORNER
DRILLING RIG: GEOPROBE 54LT

BORING NUMBER: 16SB12
DATE: 3-28-03
GEOLOGIST: M. G. COCHRAN
DRILLER: J. AKERS

Sample No. and Type or RQD	Depth (Ft.) or Run No.	Blows / 6" or RQD (%)	Sample Recovery / Sample Length	Lithology Change (Depth /Ft.) or Screened Interval	MATERIAL DESCRIPTION: Soil Density/ Consistency or Rock Hardness	Color	Material Classification	USCS *	Remarks	PID/FID Reading (ppm): Sample	Sampler BZ	Borehole**	Driller BZ**
	1		2.5/			DK BRN	CLAYEY SILT	ML	FILL, DAMP	0	0	0	0
	2		3.5			BRN	CLAYEY SILT			↓	↓	↓	↓
	3												
	4			T.D. 3.5'			REFUSAL @ 3.5						
	5												
	6												
	7												
	8												
	9												
	10												
	11												
	12												
	13												
	14												
	15												
						SAMPLED 16SS120002 @ 820							
						SAMPLED 16SB120204 @ 825							

* When rock coring, enter rock brokeness.

** Include monitor reading in 6 foot intervals @ borehole. Increase reading frequency if elevated reponse read.

Remarks:

Drilling Area Background (ppm): 0

Converted to Well: Yes ____ No ✓ Well I.D. #: ____

Tetra Tech NUS, Inc.

BORING LOG

PROJECT NAME: NSWC CRANE
PROJECT NUMBER: N9060 CTO 0279
DRILLING COMPANY: BOWSER MORNER
DRILLING RIG: GEOPROBE 54LT

BORING NUMBER: 16SB13
DATE: 3-28-03
GEOLOGIST: M. G. COCHRAN
DRILLER: J. AKERS

Sample No. and Type or RQD	Depth (Ft.) or Run No.	Blows / 6" or RQD (%)	Sample Recovery / Sample Length	Lithology Change (Depth /Ft.) or Screened Interval	MATERIAL DESCRIPTION: Soil Density/ Consistency or Rock Hardness	Color	Material Classification	USCS*	Remarks	PID/FID Reading (ppm): Sample	Sampler BZ	Borehole*	Driller-BZ**
	1			.5		DK BRN	TOPSOIL		DAMP, FILL	0	0	0	0
S1	2					DK BRN	CLAYEY SILT	ML		↓	↓	↓	↓
	3												
	4						REFUSAL @ 3.5'						
	5												
	6												
	7												
	8												
	9												
	10												
	11												
	12												
	13												
	14												
	15												
						SAMPLED 16SS130002 @ 800							
						SAMPLED 16SB130204 @ 805							

* When rock coring, enter rock brokeness.

** Include monitor reading in 6 foot intervals @ borehole. Increase reading frequency if elevated reponse read.

Remarks:

Drilling Area Background (ppm): 0

Converted to Well: Yes ____ No ✓ Well I.D. #: ____

Tetra Tech NUS, Inc.

BORING LOG

PROJECT NAME: NSWC CRANE
PROJECT NUMBER: N9060 CTO 0279
DRILLING COMPANY: BOWSER MORNER
DRILLING RIG: GEOPROBE 54LT

BORING NUMBER: 16SB14
DATE: 3-27-03
GEOLOGIST: M.G. COCHRAN
DRILLER: J. AKERS

Sample No. and Type or RQD	Depth (Ft.) or Run No.	Blows / 6" or RQD (%)	Sample Recovery / Sample Length	Lithology Change (Depth /Ft.) or Screened Interval	MATERIAL DESCRIPTION: Soil Density/ Consistency or Rock Hardness	Color	Material Classification	USCS *	Remarks	PID/FID Reading (ppm): Sample	Sampler BZ	Borehole**	Driller BZ**
	1					DKBR	TOPSOIL						
						BRN	CLAYEY SILT		DAMP, FILL	1.6	1.6	1.6	1.6
	2												
	3			T.D. 2'			REFUSAL @ 2'						
	4												
	5												
	6												
	7												
	8												
	9												
	10												
	11												
	12												
	13												
	14												
	15												
						SAMPLED	16SS140002						
						@	1500						
						SAMPLED	NO SUBSURFACE						
						@	SPL TAKEN						

* When rock coring, enter rock brokeness.

** Include monitor reading in 6 foot intervals @ borehole. Increase reading frequency if elevated reponse read.

Remarks:

Drilling Area Background (ppm): 1.6

Converted to Well: Yes ____ No ✓ Well I.D. #: ____

Tetra Tech NUS, Inc.

BORING LOG

PROJECT NAME: NSWC CRANE
PROJECT NUMBER: N9060 CTO 0279
DRILLING COMPANY: BOWSER MORNER
DRILLING RIG: GEOPROBE 54LT

BORING NUMBER: 16SB15
DATE: 3-27-03
GEOLOGIST: M.G. COCHRAN
DRILLER: J. AKERS

Sample No. and Type or RQD	Depth (Ft.) or Run No.	Blows / 6" or RQD (%)	Sample Recovery / Sample Length	Lithology Change (Depth /Ft.) or Screened Interval	MATERIAL DESCRIPTION: Soil Density/ Consistency or Rock Hardness	Color	Material Classification	USCS*	Remarks	PID/FID Reading (ppm): Sample	Sampler BZ	Borehole**	Driller BZ**
S1	1		1.5/			DK BR	TOPSOIL		TOOK 3 CORES				
						BRN	CLAYEY SILT	ML	SPL VOLUME	1.6	1.6	1.6	1.6
	2		1.5						DAMP, FILL				
							REFUSAL @ 1.5'	↓		↓	↓	↓	↓
	3												
	4												
	5												
	6												
	7												
	8												
	9												
	10												
	11												
	12												
	13												
	14												
	15												
						SAMPLED	16SS15.0002						
						@	1440						
						SAMPLED	NO SPL						
						@	TAKEN						

* When rock coring, enter rock brokeness.

** Include monitor reading in 6 foot intervals @ borehole. Increase reading frequency if elevated reponse read.

Remarks: MS/MSD SAMPLE TAKEN

Drilling Area Background (ppm): 1.6

Converted to Well: Yes ____ No ✓ Well I.D. #: ____

Tetra Tech NUS, Inc.

BORING LOG

PROJECT NAME: NSWC CRANE
PROJECT NUMBER: N9060 CTO 0279
DRILLING COMPANY: BOWSER MORNER
DRILLING RIG: GEOPROBE 54LT

BORING NUMBER: 16SB16
DATE: 3-27-03
GEOLOGIST: M. G. COCHRAN
DRILLER: J. AKERS

Sample No. and Type or RQD	Depth (Ft.) or Run No.	Blows / 6" or RQD (%)	Sample Recovery / Sample Length	Lithology Change (Depth /Ft.) or Screened Interval	MATERIAL DESCRIPTION: Soil Density/ Consistency or Rock Hardness	Color	Material Classification	USCS*	Remarks	PID/FID Reading (ppm): Sample	Sampler BZ*	Borehole**	Driller BZ**
S1	1		1.0	.5		DKBRN	TOPSOIL		TOOK 3 CORES				
						BRN	CLAYEY SILT	ML	FOR SPL VOL	1.5	1.5	1.5	1.5
	2		2.0					↓		↓	↓	↓	↓
	3						REFUSAL @ 2'						
	4												
	5												
	6												
	7												
	8												
	9												
	10												
	11												
	12												
	13												
	14												
	15												
						SAMPLED	16SS160002						
						@	1415						
						SAMPLED	NO SUBSURF						
						@	SPL TAKEN						

* When rock coring, enter rock brokeness.

** Include monitor reading in 6 foot intervals @ borehole. Increase reading frequency if elevated reponse read.

Remarks:

Drilling Area Background (ppm): 1.5

Converted to Well: Yes ____ No ✓ Well I.D. #: ____

Tetra Tech NUS, Inc.

BORING LOG

PROJECT NAME: NSWC CRANE
PROJECT NUMBER: N9060 CTO 0279
DRILLING COMPANY: BOWSER MORNER
DRILLING RIG: GEOPROBE 54LT

BORING NUMBER: 16 SB 17
DATE: 3-27-03
GEOLOGIST: M. G. COCHRAN
DRILLER: J. AKERS

Sample No. and Type or RQD	Depth (Ft.) or Run No.	Blows / 6" or RQD (%)	Sample Recovery / Sample Length	Lithology Change (Depth /Ft.) or Screened Interval	Soil Density/ Consistency or Rock Hardness	Color	Material Classification	USCS*	Remarks	PID/FID Reading (ppm) Sample	Sampler BZ	Borehole**	Driller BZ**
S1	1		3.5/	.5		BL	TOPSOIL		TOOK 2 CORES				
						RD-BRN	CLAYEY SILT	ML	FOR SPL. VOL	1.5	1.5	1.5	1.5
	2		4.0	2.0				↓	DAMP, FILL	↓	↓	↓	↓
	3					RD BN	SHALY SILTSTONE		SOFT, WEATHERED				
	4												
	5						REFUSAL @ 4'						
	6												
	7												
	8												
	9												
	10												
	11												
	12												
	13												
	14												
	15												
						SAMPLED*	16SS170002						
						@	1540						
						SAMPLED	16SB170204						
						@	1545						

* When rock coring, enter rock brokeness.

** Include monitor reading in 6 foot intervals @ borehole. Increase reading frequency if elevated reponse read.

Remarks: *DUPLICATE SPL. FD032703 02

Drilling Area Background (ppm): 1.5

Converted to Well: Yes _____ No ✓ Well I.D. #: _____

Tetra Tech NUS, Inc.

BORING LOG

PROJECT NAME: NSWC CRANE
PROJECT NUMBER: N9060 CTO 0279
DRILLING COMPANY: BOWSER MORNER
DRILLING RIG: GEOPROBE 5427

BORING NUMBER: 16SB18
DATE: 3-28-03
GEOLOGIST: M G. COCHRAN
DRILLER: J. AKERS

Sample No. and Type or RQD	Depth (FL) or Run No.	Blows / 6" or RQD (%)	Sample Recovery / Sample Length	Lithology Change (Depth /FL) or Screened Interval	MATERIAL DESCRIPTION: Soil Density/ Consistency or Rock Hardness	Color	Material Classification	USCS*	Remarks	PID/FID Reading (ppm): Sample	Sampler BZ	Borehole**	Driller BZ**
	1		2.9			BN	CLAYEY SILT	ML	DAMP, FILL	0	0	0	0
	2		3.5					↓					
	3			3.0									
	4			3.5		BL			BLACK SMEAR @ BTM .5'	0	0	0	0
	5						REFUSAL @ 3.5'		POSSIBLE WASTE MTL?				
	6												
	7												
	8												
	9												
	10												
	11												
	12												
	13												
	14												
	15												
						SAMPLED 16SS180002 @ 1030							
						SAMPLED 16SB180203 @ 1035							

* When rock coring, enter rock brokeness.

** Include monitor reading in 6 foot intervals @ borehole. Increase reading frequency if elevated reponse read.

Drilling Area Background (ppm): 0

Remarks:

Converted to Well: Yes ____ No ✓ Well I.D. #: ____

Tetra Tech NUS, Inc.

BORING LOG

PROJECT NAME: NSWC CRANE
PROJECT NUMBER: N9060 CTO 0279
DRILLING COMPANY: BOWSER MORNER
DRILLING RIG: GEOPROBE 54 LT

BORING NUMBER: 165B19
DATE: 3-28-03
GEOLOGIST: M. G. COCHRAN
DRILLER: J. AKERS

Sample No. and Type or RQD	Depth (Ft.) or Run No.	Blows / 6" or RQD (%)	Sample Recovery / Sample Length	Lithology Change (Depth /Ft.) or Screened Interval	Soil Density/ Consistency or Rock Hardness	Color	Material Classification	USCS *	Remarks	PID/FID Reading (ppm) Sample	Sampler BZ	Borehole**	Driller BZ**
	1		2.3			GR. BRN	CLAYEY SILT	ML	DAMP, FILL	0	0	0	0
	2		3.5	2.0						↓	↓	↓	↓
	3					RED BRN			RK FRAGS IN SPL.				
	4						REFUSAL @ 3.5						
	5												
	6												
	7												
	8												
	9												
	10												
	11												
	12												
	13												
	14												
	15												
						SAMPLED 165S19 0002 @ 1040							
						SAMPLED 165B19 0203 @ 1045							

* When rock coring, enter rock brokeness.

** Include monitor reading in 6 foot intervals @ borehole. Increase reading frequency if elevated reponse read.

Remarks:

Drilling Area Background (ppm): 0

Converted to Well: Yes ____ No ✓ Well I.D. #: ____

Tetra Tech NUS, Inc.

BORING LOG

PROJECT NAME: NSWC CRANE
PROJECT NUMBER: N9060 CTO 0279
DRILLING COMPANY: BOWSER MORNER
DRILLING RIG: GEOPROBE 54LT

BORING NUMBER: 16SB20
DATE: 3-28-03
GEOLOGIST: M. G. COCHRAN
DRILLER: J. AKERS

Sample No. and Type or RQD	Depth (Ft.) or Run No.	Blows / 6" or RQD (%)	Sample Recovery / Sample Length	Lithology Change (Depth /Ft.) or Screened Interval	MATERIAL DESCRIPTION: Soil Density/ Consistency or Rock Hardness	Color	Material Classification	USCS*	Remarks	PID/FID Reading (ppm): Sample	Sampler BZ	Borehole**	Driller BZ**
	1			1.0		GR BRN	CLAYEY SILT + GRAVEL	ML	TOOK 2 CORES FOR SPL. VOL	0	0	0	0
S-1	2						WEATHERED SS	↓	DAMP, FILL	↓	↓	↓	↓
	3												
	4						REFUSAL @ 2.5'						
	5												
	6												
	7												
	8												
	9												
	10												
	11												
	12												
	13												
	14												
	15												
						SAMPLED	16SS200002						
						@	1140						
						SAMPLED	NO SPL						
						@	TAKEN						

* When rock coring, enter rock brokeness.

** Include monitor reading in 6 foot intervals @ borehole. Increase reading frequency if elevated reponse read.

Remarks:

Drilling Area Background (ppm): 0

Converted to Well: Yes ____ No ✓ Well I.D. #: ____

Tetra Tech NUS, Inc.

BORING LOG

PROJECT NAME: NSWC CRANE
PROJECT NUMBER: N9060 CTO 0279
DRILLING COMPANY: BOWSER MORNER
DRILLING RIG: GEOPROBE 54LT

BORING NUMBER: 16 SB 21
DATE: 3-28-03
GEOLOGIST: M. G. COCHRAN
DRILLER: J. AKERS

Sample No. and Type or RQD	Depth (Ft.) or Run No.	Blows / 6" or RQD (%)	Sample Recovery / Sample Length	Lithology Change (Depth /Ft.) or Screened Interval	MATERIAL DESCRIPTION: Soil Density/ Consistency or Rock Hardness	Color	Material Classification	USCS *	Remarks	PID/FID Reading (ppm): Sample	Sampler BZ:	Borehole**	Driller BZ**
	1		2.1			BRN	CLAYEY SILT + GRAVEL	ML	TOOK 3 CORES FOR SPL. VOL	0	0	0	0
S1	2		2.5	2.0					DAMP FILL	↓	↓	↓	↓
	3			2.5		BRN	WEATHERED SS						
	4						REFUSAL @ 2.5						
	5												
	6												
	7												
	8												
	9												
	10												
	11												
	12												
	13												
	14												
	15												
						SAMPLED* 16 SS 21 0002							
						@ 1100							
						SAMPLED No SUB SAMPLE							
						@ Collected							

* When rock coring, enter rock brokeness.

** Include monitor reading in 6 foot intervals @ borehole. Increase reading frequency if elevated reponse read.

Remarks: * MS/MSD collected @ this location.

Drilling Area Background (ppm): 0

Converted to Well: Yes ____ No ✓ Well I.D. #: ____

Tetra Tech NUS, Inc.

BORING LOG

PROJECT NAME: NSWC CRANE
PROJECT NUMBER: N9060 CTO 0279
DRILLING COMPANY: BOWSER MORNER
DRILLING RIG: GEOPROBE 54 LT

BORING NUMBER: 16SB22
DATE: 3/28/03
GEOLOGIST: M. G. COCHRAN
DRILLER: J. AKERS

Sample No. and Type or RQD	Depth (Ft.) or Run No.	Blows / 6" or RQD (%)	Sample Recovery / Sample Length	Lithology Change (Depth /Ft.) or Screened Interval	MATERIAL DESCRIPTION: Soil Density/ Consistency or Rock Hardness	Color	Material Classification	USCS *	Remarks	PID/FID Reading (ppm): Sample	Sampler BZ	Borehole**	Driller BZ**
S1	1		2.5/	.5		DK BR BRN	TOPSOIL CLAYEY SILT	ML	DAMP. FILL	0	0	0	0
	2		3.5					↓		↓	↓	↓	↓
	3					LT BRN	WEATHERED S. STONE						
	4						REFUSAL @ 3.5						
	5												
	6												
	7												
	8												
	9												
	10												
	11												
	12												
	13												
	14												
	15												
						SAMPLED	16SS220002						
						@	910						
						SAMPLED	16SB220203						
						@	915.						

* When rock coring, enter rock brokeness.

** Include monitor reading in 6 foot intervals @ borehole. Increase reading frequency if elevated reponse read.

Remarks:

Drilling Area Background (ppm): 0

Converted to Well: Yes ____ No ✓ Well I.D. #: ____

Tetra Tech NUS, Inc.

BORING LOG

PROJECT NAME: NSWC CRANE
PROJECT NUMBER: N9060 CTO 0279
DRILLING COMPANY: BOWSER MORNER
DRILLING RIG: GEOPROBE 54LT

BORING NUMBER: 16SB23
DATE: 3-28-03
GEOLOGIST: M. G. COCHRAN
DRILLER: J. AKERS

Sample No. and Type or RQD	Depth (FL) or Run No.	Blows / 6" or RQD (%)	Sample Recovery / Sample Length	Lithology Change (Depth /FL) or Screened Interval	MATERIAL DESCRIPTION: Soil Density/ Consistency or Rock Hardness	Color	Material Classification	USCS *	Remarks	PID/FID Reading (ppm): Sample	Sampler BZ	Borehole**	Driller BZ**
	1		2.5'			DKBRN	TOPSOIL		TOOK 2 CORES				
						RDBRN	CLAYEY SILT	ML	FOR SPL. VOL	0	0	0	0
S1	2		3.5					↓	DAMP, FILL	↓	↓	↓	↓
	3												
	4						REFUSAL @ 3.5'						
	5												
	6												
	7												
	8												
	9												
	10												
	11												
	12												
	13												
	14												
	15												
						SAMPLED	16SS230002(1)						
						@	1000						
						SAMPLED	16SB230203						
						@	1005 (2)						

* When rock coring, enter rock brokeness.

** Include monitor reading in 6 foot intervals @ borehole. Increase reading frequency if elevated reponse read.

Remarks: (1) FD032803 01
(2) FD032803 02

Drilling Area Background (ppm): 0

Converted to Well: Yes ____ No ✓ Well I.D. #: ____

Tetra Tech NUS, Inc.

BORING LOG

PROJECT NAME: NSWC CRANE
PROJECT NUMBER: N9060 CTO 0279
DRILLING COMPANY: BOWSER MORNER
DRILLING RIG: GEOPROBE 54LT

BORING NUMBER: 16SB24
DATE: 3-28-03
GEOLOGIST: M. G. COCHRAN
DRILLER: J. AKERS

Sample No. and Type or RQD	Depth (Ft.) or Run No.	Blows / 6" or RQD (%)	Sample Recovery / Sample Length	Lithology Change (Depth /Ft.) or Screened Interval	MATERIAL DESCRIPTION: Soil Density/ Consistency or Rock Hardness	Color	Material Classification	USCS*	Remarks	PID/FID Reading (ppm): Sample	Sampler BZ	Borehole**	Driller BZ**
	1		2.2	.5		DKBRN	TOPSOIL						
						RD BRN	CLAYEY SILT	ML	DAMP, FILL	0	0	0	0
	2		3.5					↓		↓	↓	↓	↓
	3								SS. FRAG BTM				
	4						REFUSAL @ 3.5'						
	5												
	6												
	7												
	8												
	9												
	10												
	11												
	12												
	13												
	14												
	15												
						SAMPLED	16SS240002						
						@	940						
						SAMPLED	16SB240203						
						@	945						

* When rock coring, enter rock brokeness.

** Include monitor reading in 6 foot intervals @ borehole. Increase reading frequency if elevated reponse read.

Remarks: GEOPROBE MACROCORE

Drilling Area Background (ppm): 0

Converted to Well: Yes ____ No ✓ Well I.D. #: ____

Tetra Tech NUS, Inc.

BORING LOG

PROJECT NAME: NSWC CRANE
PROJECT NUMBER: N9060 CTO 0279
DRILLING COMPANY: BOWSER MORNER
DRILLING RIG: GEOPROBE 54LT

BORING NUMBER: 16SB25
DATE: 3/28/03
GEOLOGIST: M. G. COCHRAN
DRILLER: J. AKERS

Sample No. and Type or RQD	Depth (Ft.) or Run No.	Blows / 6" or RQD (%)	Sample Recovery / Sample Length	Lithology Change (Depth /Ft.) or Screened Interval	Soil Density/ Consistency or Rock Hardness	Color	Material Classification	USCS*	Remarks	PID/FID Reading (ppm) Sample	Sampler BZ	Borehole**	Driller BZ**
	1		2.4/	.5		DK BRN	TOPSOIL						
						RD BRN	CLAYEY SILT	ML	DAMP, FILL	0	0	0	0
S1	2		3.5						RK FRAGS IN SPL.	↓	↓	↓	↓
	3												
	4						REFUSAL @ 3.5						
	5												
	6												
	7												
	8												
	9												
	10												
	11												
	12												
	13												
	14												
	15												
						SAMPLED	16SS250002						
						@	930						
						SAMPLED	16SB250203						
						@	935						

* When rock coring, enter rock brokeness.

** Include monitor reading in 6 foot intervals @ borehole. Increase reading frequency if elevated reponse read.

Remarks:

Drilling Area Background (ppm): 0

Converted to Well: Yes ____ No ✓ Well I.D. #: ____

Tetra Tech NUS, Inc.

BORING LOG

PROJECT NAME: NSWC CRANE
PROJECT NUMBER: N9060 CTO 0279
DRILLING COMPANY: BOWSER MORNER
DRILLING RIG:

BORING NUMBER: 16SB26/MW05
DATE: 4/9/03
GEOLOGIST: B Bauhover
DRILLER: Dave S.

Sample No. and Type or RQD	Depth (Ft.) or Run No.	Blows / 6" or RQD (%)	Sample Recovery / Sample Length	Lithology Change (Depth /Ft.) or Screened Interval	Soil Density/ Consistency or Rock Hardness	Color	Material Classification	USCS *	Remarks	PID/FID Reading (ppm) Sample	Sampler BZ	Borehole**	Driller BZ**
	1					BR	1' CLAY	CL		00			
	2					YELL BR	1-4' SILTY SAND W/S.S	SM					
	3					LT GRAY	FRAGS						
S1 1035	4		4" / 4"										
	5						ROCK @ 4'						
	6												
	7												
	8												
	9												
	10												
	11												
	12												
	13												
	14												
	15												
						SAMPLED 16SS260002			FD040903 02				
						@ 1038			MS/MSD				
						SAMPLED 16SB260304			FD040903 03				
						@ 1045			MS/MSD				

* When rock coring, enter rock brokeness.

** Include monitor reading in 6 foot intervals @ borehole. Increase reading frequency if elevated reponse read.

Drilling Area Background (ppm):

Remarks:

Converted to Well: Yes ____ No X Well I.D. #: ____

NOT AT TIME OF INITIAL SAMPLING

Tetra Tech NUS, Inc.

BORING LOG

PROJECT NAME: NSWC CRANE
PROJECT NUMBER: N9060 CTO 0279
DRILLING COMPANY: BOWSER MORNER
DRILLING RIG: GEOPROBE 54 LT

BORING NUMBER: 165B27
DATE: 3-28-03
GEOLOGIST: M. G. COCHRAN
DRILLER: J AKERS

Sample No. and Type or RQD	Depth (Ft.) or Run No.	Blows / 6" or RQD (%)	Sample Recovery / Sample Length	Lithology Change (Depth /Ft.) or Screened Interval	MATERIAL DESCRIPTION: Soil Density/ Consistency or Rock Hardness	Color	Material Classification	USCS*	Remarks	PID/FID Reading (ppm): Sample	Sampler BZ	Borehole**	Driller BZ**
	1		2.91	.5		PARK BRN	TOPSOIL		DAMP, FILL	0	0	0	0
S1	2		3.5				CLAYEY SILT W GRAVEL FRAGS	ML ↓		↓	↓	↓	↓
	3			2.5			WEATHERED SS						
	4			3.5									
	5						REFUSAL @ 3.5'						
	6												
	7												
	8												
	9												
	10												
	11												
	12												
	13												
	14												
	15												
						SAMPLED 165S270002 @ 1120							
						SAMPLED 165B270203 @ 1125							

* When rock coring, enter rock brokeness.

** Include monitor reading in 6 foot intervals @ borehole. Increase reading frequency if elevated reponse read.

Remarks: MACROCORE

Drilling Area Background (ppm): 0

Converted to Well: Yes ____ No ✓ Well I.D. #: ____

Tetra Tech NUS, Inc.

BORING LOG

PROJECT NAME: NSWC CRANE
PROJECT NUMBER: N9060 CTO 0279
DRILLING COMPANY: BOWSER MORNER
DRILLING RIG: GEOPROBE 54LT

BORING NUMBER: 16SB28
DATE: 3-28-03
GEOLOGIST: M. G. COCHRAN
DRILLER: J. AKERS

Sample No. and Type or RQD	Depth (Ft.) or Run No.	Blows / 6" or RQD (%)	Sample Recovery / Sample Length	Lithology Change (Depth /Ft.) or Screened Interval	MATERIAL DESCRIPTION: Soil Density/ Consistency or Rock Hardness	Color	Material Classification	USCS*	Remarks	PID/FID Reading (ppm): Sample	Sampler BZ	Borehole**	Driller BZ**
	1			.5		DKBR	TOPSOIL						
						BRN	CLAYEY SILT	ML	DAMP, FILL	0	0	0	0
	2			1.5				↓		↓	↓	↓	↓
	3					BRN	SANDY SILT						
	4			3.5									
	5						REFUSAL @ 3.5						
	6												
	7												
	8												
	9												
	10												
	11												
	12												
	13												
	14												
	15												
						SAMPLED	16SS280002						
						@	1130						
						SAMPLED	16SB280203						
						@	1135						

* When rock coring, enter rock brokeness.

** Include monitor reading in 6 foot intervals @ borehole. Increase reading frequency if elevated reponse read.

Remarks:

Drilling Area Background (ppm): 0-0

Converted to Well: Yes ____ No X Well I.D. #: ____

Tetra Tech NUS, Inc.

BORING LOG

PROJECT NAME: NSWC CRANE
PROJECT NUMBER: N9060 CTO 0279
DRILLING COMPANY: BOWSER MORNER
DRILLING RIG: GEOPROBE 54 LT

BORING NUMBER: 16SB29
DATE: 3/28/03
GEOLOGIST: M. G. COCHRAN
DRILLER: J. AKERS

Sample No. and Type or RQD	Depth (Ft.) or Run No.	Blows / 6" or RQD (%)	Sample Recovery / Sample Length	Lithology Change (Depth /Ft.) or Screened Interval	MATERIAL DESCRIPTION: Soil Density/ Consistency or Rock Hardness	Color	Material Classification	USCS *	Remarks	PID/FID Reading (ppm): Sample	Sampler BZ	Borehole**	Driller BZ**
	1		3.0/			DKBR	TOPSOIL						
						RDBR	CLAYEY SILT	ML	DAMP	0	0	0	0
	2		3.5					↓		↓	↓	↓	↓
	3												
	4						REFUSAL @ 3.5						
	5												
	6												
	7												
	8												
	9												
	10												
	11												
	12												
	13												
	14												
	15												
						SAMPLED	16SS290002						
						@	900						
						SAMPLED	16SB290203						
						@	905						

* When rock coring, enter rock brokeness.

** Include monitor reading in 6 foot intervals @ borehole. Increase reading frequency if elevated reponse read.

Remarks:

Drilling Area Background (ppm): 0

Converted to Well: Yes ____ No ✓ Well I.D. #: ____

Tetra Tech NUS, Inc.

BORING LOG

PROJECT NAME: NSWC CRANE
PROJECT NUMBER: N9060 CTO 0279
DRILLING COMPANY: BOWSER MORNER
DRILLING RIG: GEOPROBE 54LT

BORING NUMBER: 16SB30
DATE: 3-28-03
GEOLOGIST: MG COCHRAN
DRILLER: J. AKERS

Sample No. and Type or RQD	Depth (Ft.) or Run No.	Blows / 6" or RQD (%)	Sample Recovery / Sample Length	Lithology Change (Depth /Ft.) or Screened Interval	MATERIAL DESCRIPTION: Soil Density/ Consistency or Rock Hardness	Color	Material Classification	USCS*	Remarks	PID/FID Reading (ppm): Sample	Sampler BZ	Borehole**	Driller BZ**
	1		3.1/	.5		DKBR ROGRN	TOPSOIL CLAYEY SILT	ML	DAMP, FILL	0	0	0	0
	2		3.0							↓	↓	↓	↓
	3								SS FRAGS @ BTM.				
	4						REFUSAL @ 3'						
	5												
	6												
	7												
	8												
	9												
	10												
	11												
	12												
	13												
	14												
	15												
						SAMPLED 16SS300002 @ 840							
						SAMPLED 16SB300203 @ 845							

* When rock coring, enter rock brokeness.

** Include monitor reading in 6 foot intervals @ borehole. Increase reading frequency if elevated reponse read.

Remarks:

Drilling Area Background (ppm): 0

Converted to Well: Yes ____ No ✓ Well I.D. #: ____

Tetra Tech NUS, Inc.

BORING LOG

PROJECT NAME: NSWC CRANE
PROJECT NUMBER: N9060 CTO 0279
DRILLING COMPANY: BOWSER MORNER
DRILLING RIG: GEOPROBE 54LT

BORING NUMBER: 16SB31
DATE: 3-28-03
GEOLOGIST: M. G. COCHRAN
DRILLER: J. AKERS

Sample No. and Type or RQD	Depth (Ft.) or Run No.	Blows / 6" or RQD (%)	Sample Recovery / Sample Length	Lithology Change (Depth /Ft.) or Screened Interval	MATERIAL DESCRIPTION: Soil Density/ Consistency or Rock Hardness	Color	Material Classification	USCS*	Remarks	PID/FID Reading (ppm): Sample	Sampler BZ	Borehole**	Driller BZ**
S1	1		2.0/	.5		DKBR	TOPSOIL						
						RDBRN	CLAYEY SILT	ML	DAMP	0	0	0	0
	2		3.0					↓		↓	↓	↓	↓
	3						REFUSAL @ 3'		SS FRAG @ BTM				
	4												
	5												
	6												
	7												
	8												
	9												
	10												
	11												
	12												
	13												
	14												
	15												
						SAMPLED	16SS310002						
						@	830						
						SAMPLED	NO SPL						
						@	TAK						

* When rock coring, enter rock brokeness.

** Include monitor reading in 6 foot intervals @ borehole. Increase reading frequency if elevated reponse read.

Remarks:

Drilling Area Background (ppm): 0

Converted to Well: Yes ____ No ✓ Well I.D. #: ____

Tetra Tech NUS, Inc.

BORING LOG

PROJECT NAME: NSWC CRANE
PROJECT NUMBER: N9060 CTO 0279
DRILLING COMPANY: BOWSER MORNER
DRILLING RIG:

BORING NUMBER: 16SB32
DATE: 4/9/03
GEOLOGIST: B. BALLWUEE
DRILLER: DAVES.

Sample No. and Type or RQD	Depth (Ft.) or Run No.	Blows / 6" or RQD (%)	Sample Recovery / Sample Length	Lithology Change (Depth /Ft.) or Screened Interval	MATERIAL DESCRIPTION: Soil Density/ Consistency or Rock Hardness	Color	Material Classification	USCS *	Remarks	PID/FID Reading (ppm): Sample	Sampler BZ	Borehole**	Driller BZ**
	1				moist firm	BR	CLAY	CL		0.0			
	2												
	3												
SI 1010	4		3.4' / 4'			LT GRAY	SANDY CLAY	CL					
	5			T.D. 4'									
	6												
	7												
	8												
	9												
	10												
	11												
	12												
	13												
	14												
	15												
						SAMPLED 16SS320002 @ 1015			FD040903 01 For PCBs				
						SAMPLED 16SB320204 @ 1020							

* When rock coring, enter rock brokeness.

** Include monitor reading in 6 foot intervals @ borehole. Increase reading frequency if elevated reponse read.

Drilling Area Background (ppm):

Remarks:

Converted to Well: Yes ____ No X Well I.D. #: ____

Tetra Tech NUS, Inc.

BORING LOG

PROJECT NAME: NSWC CRANE
PROJECT NUMBER: N9060 CTO 0279
DRILLING COMPANY: BOWSER MORNER
DRILLING RIG: Roto Sonic

BORING NUMBER: 16SB33
DATE: 4/4/03
GEOLOGIST: B Balkovec
DRILLER: Daves.

Sample No. and Type or RQD	Depth (FL) or Run No.	Blows / 6" or RQD (%)	Sample Recovery / Sample Length	Lithology Change (Depth /FL) or Screened Interval	MATERIAL DESCRIPTION: Soil Density/ Consistency or Rock Hardness	Color	Material Classification	USCS*	Remarks	PID/FID Reading (ppm): Sample	Sampler BZ	Borehole**	Driller BZ**
	1				Moist soft	BR	.5' CLAY	CL		0.0			
	2				Dense	Yell or	Silty Sand w/	SM		↓			
	3				Hard	↓	S.S. Frags	↓					
S1 0451	4		3.4'/3.5	T.D. 3.5'									
	5												
	6												
	7												
	8												
	9												
	10												
	11												
	12												
	13												
	14												
	15												
						SAMPLED 16SS330002 @ 1000							
						SAMPLED 16SB330204 @ 1005							

* When rock coring, enter rock brokeness.

** Include monitor reading in 6 foot intervals @ borehole. Increase reading frequency if elevated reponse read.

Remarks:

Drilling Area Background (ppm): 0.0

Converted to Well: Yes ____ No X Well I.D. #: ____

Tetra Tech NUS, Inc.

BORING LOG

PROJECT NAME: NSWC CRANE
PROJECT NUMBER: N9060 CTO 0279
DRILLING COMPANY: BOWSER MORNER
DRILLING RIG: Roto Sonic

BORING NUMBER: 16SB34
DATE: 4/4/03
GEOLOGIST: B. Balkovec
DRILLER: Dave S.

Sample No. and Type or RQD	Depth (Ft.) or Run No.	Blows / 6" or RQD (%)	Sample Recovery / Sample Length	Lithology Change (Depth /Ft.) or Screened Interval	MATERIAL DESCRIPTION: Soil Density/ Consistency or Rock Hardness	Color	Material Classification	USCS *	Remarks	PID/FID Reading (ppm): Sample	Sampler BZ	Borehole**	Driller BZ**
	1				MOIST + SOFT	BR	5" CLAY	CL		00			
	2				DRY +	YELL OR	SILTY SAND	SM		↓			
S-1 0245	3		3"/3"		STIFF	↓	W/S.S. FRAGS	↓		↓			
	4			T.D. 3'			REFUSAL @ 3'						
	5												
	6												
	7												
	8												
	9												
	10												
	11												
	12												
	13												
	14												
	15												
						SAMPLED 16SS340002							
						@ 0947							
						SAMPLED 16SB340203							
						@ 0953							

* When rock coring, enter rock brokeness.

** Include monitor reading in 6 foot intervals @ borehole. Increase reading frequency if elevated reponse read.

Remarks:

Drilling Area Background (ppm): 00

Converted to Well: Yes ____ No X Well I.D. #: ____

Tetra Tech NUS, Inc.

BORING LOG

Page ___ of ___

PROJECT NAME: NSWC CRANE
PROJECT NUMBER: N9060 CTO 0279
DRILLING COMPANY: BOWSER MORNER
DRILLING RIG: GEOPROBE 54LT

BORING NUMBER: 16SB35
DATE: 3-28-03
GEOLOGIST: M. G. COCHRAN
DRILLER: J. AKERS

Sample No. and Type or RQD	Depth (Ft.) or Run No.	Blows / 6" or RQD (%)	Sample Recovery / Sample Length	Lithology Change (Depth /Ft.) or Screened Interval	MATERIAL DESCRIPTION: Soil Density/ Consistency or Rock Hardness	Color	Material Classification	USCS*	Remarks	PID/FID Reading (ppm): Sample	Sampler BZ	Borehole**	Driller BZ**
	1		1.9/	1.0		LT GREY	CLAYEY SILT + GRAVEL		FILL, DAMP	0	0	0	0
	2		2.5			BRN	CLAYEY SILT	ML		↓	↓	↓	↓
	3												
	4						REFUSAL @ 2.5'						
	5												
	6												
	7												
	8												
	9												
	10												
	11												
	12												
	13												
	14												
	15												
						SAMPLED	16SS350002						
						@	1440						
						SAMPLED	NO SPL						
						@	TAKEN						

* When rock coring, enter rock brokeness.

** Include monitor reading in 6 foot intervals @ borehole. Increase reading frequency if elevated reponse read.

Remarks:

Drilling Area Background (ppm): 0

Converted to Well: Yes ____ No ✓ Well I.D. #: ____

Tetra Tech NUS, Inc.

BORING LOG

PROJECT NAME: NSWC CRANE
PROJECT NUMBER: N9060 CTO 0279
DRILLING COMPANY: BOWSER MORNER
DRILLING RIG: ROTO SONIC

BORING NUMBER: 16SB36/MW03
DATE: 4/9/03
GEOLOGIST: B. BALKOVEC
DRILLER: DAVE S.

Sample No. and Type or RQD	Depth (Ft.) or Run No.	Blows / 6" or RQD (%)	Sample Recovery / Sample Length	Lithology Change (Depth /Ft.) or Screened Interval	MATERIAL DESCRIPTION: Soil Density/ Consistency or Rock Hardness	Color	Material Classification	USCS*	Remarks	PID/FID Reading (ppm): Sample	Sampler BZ	Borehole**	Driller BZ**
	1				DRY + STIFF	BR	CLAY	CL		OV			
	2				↓	↓	↓	↓		↓			
S-1 0925	3		2.4'/3'		DRY	YELLOW	SILTY SAND W/ S.S. FRAGS	SM		↓			
	4						REFUSAL @ 3'						
	5												
	6												
	7												
	8												
	9												
	10												
	11												
	12												
	13												
	14												
	15												
						SAMPLED 16SS360002							
						@ 0930							
						SAMPLED 16SB360203							
						@ 0940							

* When rock coring, enter rock brokeness.

** Include monitor reading in 6 foot intervals @ borehole. Increase reading frequency if elevated reponse read.

Drilling Area Background (ppm):

Remarks:

Converted to Well: Yes ____ No X Well I.D. #: ____

NOT DURING INITIAL SAMPLING

Tetra Tech NUS, Inc.

BORING LOG

Page ___ of ___

PROJECT NAME: NSWC CRANE
PROJECT NUMBER: N9060 CTO 0279
DRILLING COMPANY: BOWSER MORNER
DRILLING RIG: GEOPROBE 54LT

BORING NUMBER: 16SB37
DATE: 3-28-03
GEOLOGIST: M. G. COCHRAN
DRILLER: J. AKERS

Sample No. and Type or RQD	Depth (Ft.) or Run No.	Blows / 6" or RQD (%)	Sample Recovery / Sample Length	Lithology Change (Depth /Ft.) or Screened Interval	MATERIAL DESCRIPTION: Soil Density/ Consistency or Rock Hardness	Color	Material Classification	USCS *	Remarks	PID/FID Reading (ppm): Sample	Sampler BZ	Borehole**	Driller BZ**
S1	1		2.1			LT GREY	CLAYEY SILT+GRAVEL	ML-GP	DAMP, FILL	0	0	0	0
	2		2.5			OR BRN	CLAYEY SILT	ML		↓	↓	↓	↓
	3												
	4						REFUSAL @ 2.5'						
	5												
	6												
	7												
	8												
	9												
	10												
	11												
	12												
	13												
	14												
	15												
						SAMPLED	16SS370002						
						@	1435						
						SAMPLED	NO SPL						
						@	TAKEN						

* When rock coring, enter rock brokeness.

** Include monitor reading in 6 foot intervals @ borehole. Increase reading frequency if elevated reponse read.

Remarks:

Drilling Area Background (ppm): 0

Converted to Well: Yes ___ No ✓ Well I.D. #: ___

Tetra Tech NUS, Inc.

BORING LOG

PROJECT NAME: NSWC CRANE
PROJECT NUMBER: N9060 CTO 0279
DRILLING COMPANY: BOWSER MORNER
DRILLING RIG: GEOPROBE 54LT

BORING NUMBER: 16SB38
DATE: 3-28-03
GEOLOGIST: M. G. COCHRAN
DRILLER: J. AKERS

Sample No. and Type or RQD	Depth (FL) or Run No.	Blows / 6" or RQD (%)	Sample Recovery / Sample Length	Lithology Change (Depth /FL) or Screened Interval	MATERIAL DESCRIPTION: Soil Density/ Consistency or Rock Hardness	Color	Material Classification	USCS*	Remarks	PID/FID Reading (ppm): Sample	Sampler BZ	Borehole**	Driller BZ**
	1		3.3/	1.0		GREY	CLAYEY SILT +	ML-GP	DAMP, FILL	0	0	0	0
S1	2		3.5				GRAVEL	ML		↓	↓	↓	↓
	3					BR	CLAYEY SILT						
	4												
	5						REFUSAL @ 3.5'						
	6												
	7												
	8												
	9												
	10												
	11												
	12												
	13												
	14												
	15												
						SAMPLED 16SS380002							
						@ 1410							
						SAMPLED 16SB380203							
						@ 1415							

* When rock coring, enter rock brokeness.

** Include monitor reading in 6 foot intervals @ borehole. Increase reading frequency if elevated reponse read.

Drilling Area Background (ppm): 0

Remarks:

Converted to Well: Yes _____ No _____ Well I.D. #: _____

Tetra Tech NUS, Inc.

BORING LOG

PROJECT NAME: NSWC CRANE
PROJECT NUMBER: N9060 CTO 0279
DRILLING COMPANY: BOWSER MORNER
DRILLING RIG: GEOPROBE 54 LT

BORING NUMBER: 16SB39
DATE: 3-28-03
GEOLOGIST: M. G. COCHRAN
DRILLER: J. AKERS

Sample No. and Type or RQD	Depth (FL) or Run No.	Blows / 6" or RQD (%)	Sample Recovery / Sample Length	Lithology Change (Depth /FL) or Screened Interval	MATERIAL DESCRIPTION: Soil Density/ Consistency or Rock Hardness	Color	Material Classification	USCS*	Remarks	PID/FID Reading (ppm): Sample	Sampler BZ	Borehole**	Driller BZ**
	1		2.91	1.0		BRN	CLAYEY SILT +	GP-ML	DAMP, FILL	0	0	0	0
S-1	2		3.5			BRN	GRAVEL FRAGS	ML		↓	↓	↓	↓
	3						CLAYEY SILT		BLACK SMEAR IN BTM, POSSIBLE WASTE				
	4												
	5						REFUSAL @ 3.5						
	6												
	7												
	8												
	9												
	10												
	11												
	12												
	13												
	14												
	15												
						SAMPLED 16SS390002 @ 1400							
						SAMPLED 16SB390203 @ 1405							

* When rock coring, enter rock brokeness.

** Include monitor reading in 6 foot intervals @ borehole. Increase reading frequency if elevated reponse read.

Remarks:

Drilling Area Background (ppm): 0

Converted to Well: Yes ____ No ✓ Well I.D. #: ____

Tetra Tech NUS, Inc.

BORING LOG

PROJECT NAME: NSWC CRANE
PROJECT NUMBER: N9060 CTO 0279
DRILLING COMPANY: BOWSER MORNER
DRILLING RIG: GEOPROBE 54LT

BORING NUMBER: 16SB40
DATE: 3-28-03
GEOLOGIST: M. G. COCHRAN
DRILLER: J. AKERS

Sample No. and Type or RQD	Depth (Ft.) or Run No.	Blows / 6" or RQD (%)	Sample Recovery / Sample Length	Lithology Change (Depth /Ft.) or Screened Interval	MATERIAL DESCRIPTION: Soil Density/ Consistency or Rock Hardness	Color	Material Classification	USCS*	Remarks	PID/FID Reading (ppm): Sample	Sampler BZ**	Borehole**	Driller BZ**
	1		1.1/	1.0		DK BRN	TOPSOIL	ML	DAMP, FILL TO TD.	0	0	0	0
S1	2		4.0			BRN	CLAYEY SILT						
	3												
	4												
S2	5		2.0			BRN	CLAY EY SILT		DAMP-MOIST	0	0	0	0
	6		4.0						TOOK 2 CORES FOR SPL.				
	7								VOL.				
	8								MOIST				
	9												
	10												
	11												
	12												
	13												
	14												
	15												
						SAMPLED	16SB400506						
						@	1340						
						SAMPLED*	16SB400608						
						@	1345 DUP						

* When rock coring, enter rock brokeness.

** Include monitor reading in 6 foot intervals @ borehole. Increase reading frequency if elevated reponse read.

Drilling Area Background (ppm): 0

Remarks: H_2O LEVEL IN SUMP 5' BGS TO 8' BGS
* FD032803 03 DUPLICATE SPL.

Converted to Well: Yes ____ No ✓ Well I.D. #: ____

Tetra Tech NUS, Inc.

BORING LOG

PROJECT NAME: NSWC CRANE
PROJECT NUMBER: N9060 CTO 0279
DRILLING COMPANY: BOWSER MORNER
DRILLING RIG: GEOPROBE 54 LT

BORING NUMBER: 16SB41
DATE: 3-27-03
GEOLOGIST: M. G. COCHRAN
DRILLER: J. AKERS

Sample No. and Type or RQD	Depth (Ft.) or Run No.	Blows / 6" or RQD (%)	Sample Recovery / Sample Length	Lithology Change (Depth /Ft.) or Screened Interval	MATERIAL DESCRIPTION: Soil Density/ Consistency or Rock Hardness	Color	Material Classification	USCS*	Remarks	PID/FID Reading (ppm): Sample	Sampler BZ	Borehole**	Driller BZ**
S1	1		3.1/	1.0		BL	TOPSOIL		DAMP	1.7	1.7	1.7	1.7
	2		4.0			BRN	CLAYEY SILT.	ML	BRICK MTL. IN SPL.				
	3							↓	FILL				
	4		1.8/						moist	1.7	1.7	1.7	1.7
S2	5		4.0										
	6			7.0									
	7					GREY	SILTY CLAY		SATURATED				
	8						TD 8.0						
	9												
	10												
	11												
	12												
	13												
	14												
	15												
						SAMPLED 16SB410305 @ 1010							
						SAMPLED 16SB410507 @ 1015							

* When rock coring, enter rock brokeness.

** Include monitor reading in 6 foot intervals @ borehole. Increase reading frequency if elevated reponse read.

Remarks: HOLE NEAR SUMP. SUMP H2O LEVEL 4' BGS. SUMP BTM 8' BGS.

Drilling Area Background (ppm):

Converted to Well: Yes _____ No _____ Well I.D. #: _____

APPENDIX B.1.4
SWMU 16 BORING LOGS AND MONITORING WELL
CONSTRUCTION DIAGRAMS
ROUND 2

WELL NO.: 16MWT07

Tetra Tech NUS, Inc.

BEDROCK MONITORING WELL SHEET WELL INSTALLED IN BEDROCK

PROJECT: NSWC CRANE
LOCATION: CRANE, IN
PROJECT NO.: 9060
BORING: 16MWT07
DATE BEGUN: 11-11-03
DATE COMPLETED: 11-11-03
FIELD GEOLOGIST: M.G. COCHRAN
GROUND ELEVATION: 760.54
DATUM: NAVD 88

DRILLER: J WALSH
DRILLING METHOD: HSA
DEVELOPMENT METHOD: SURGE/BAILER

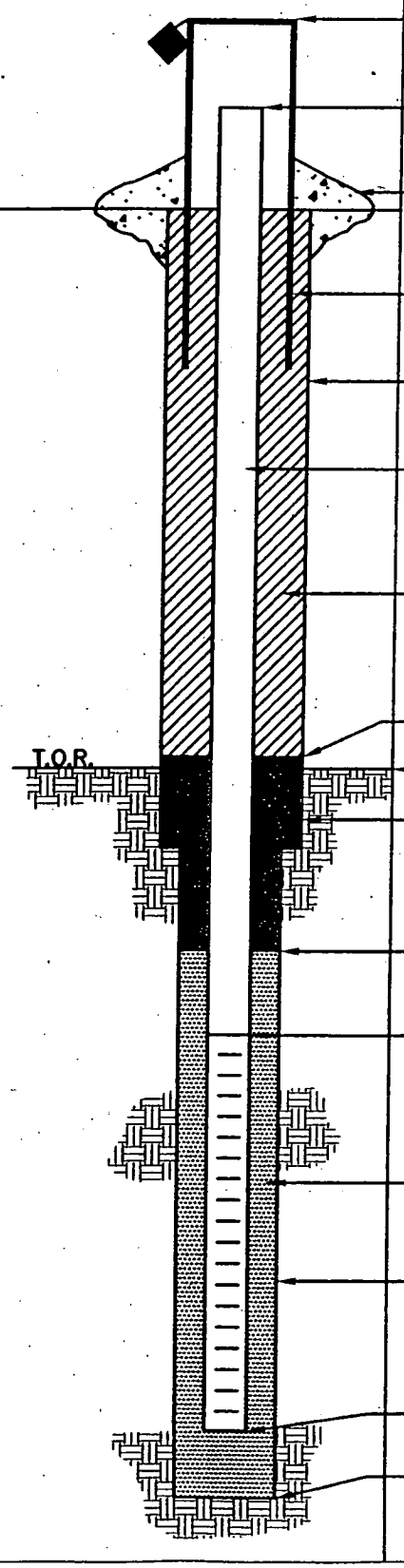

ELEVATION/HEIGHT OF TOP OF SURFACE CASING: 762.94/2.4

ELEVATION/HEIGHT TOP OF RISER: 762.87/2.3

TYPE OF SURFACE SEAL: CONCRETE

I.D. OF SURFACE CASING: 4" x 4" SQ

DIAMETER OF HOLE: 8 1/2"

RISER PIPE I.D.: 2"
TYPE OF RISER PIPE: PVC SLOTTED

TYPE OF BACKFILL: CETCO PURE GOLD MEDIUM BENTONITE CHIPS

ELEVATION/DEPTH TOP OF SEAL: 757.54/3

ELEVATION/DEPTH TOP OF BEDROCK: 754.04/6.5

TYPE OF SEAL: CETCO PURE GOLD MEDIUM BENTONITE CHIPS

ELEVATION/DEPTH TOP OF SAND: 747.54/13

ELEVATION/DEPTH TOP OF SCREEN: 745.54/15
TYPE OF SCREEN: PVC SLOTTED
SLOT SIZE x LENGTH: .020 X 10'
I.D. SCREEN: 2"

TYPE OF SAND PACK: GLOBAL MEDIUM SAND

DIAMETER OF HOLE IN BEDROCK: 8 1/2"
CORE/REAM:

ELEVATION/DEPTH BOTTOM SCREEN: 735.54/25
ELEVATION/DEPTH BOTTOM OF SAND: 735.04/25.5
ELEVATION/DEPTH BOTTOM OF HOLE: 735.04/25.5
BACKFILL MATERIAL BELOW SAND: N/A

ACAD:FORM_MWINBR.dwg 07/28/99 INL

Tetra Tech NUS, Inc.

BORING LOG

PROJECT NAME: Crane NSWC
PROJECT NUMBER: 9060
DRILLING COMPANY: BOWSER MORNER
DRILLING RIG: CME 550 ATV

BORING No.: 16MWT07
DATE: 11-11-03
GEOLOGIST: M.G. COCHRAN
DRILLER: J WALSH

Sample No. and Type or RQD	Depth (Ft.) or Run No.	Blows / 6" or RQD (%)	Sample Recovery / Sample Length	Lithology Change (Depth/Ft.) or Screened Interval	MATERIAL DESCRIPTION: Soil Density/ Consistency or Rock Hardness	Color	Material Classification	USCS *	Remarks	PID/FID Reading (ppm): Sample	Sampler BZ	Borehole**	Driller BZ**
							SEE BORING			—	—	—	—
							LOG OF						
							16MWT08 FOR						
							MATERIAL						
							DESCRIPTION						

* When rock coring, enter rock brokeness.

** Include monitor reading in 6 foot intervals @ borehole. Increase reading frequency if elevated reponse read.

Drilling Area Background (ppm): —

Remarks: 8 1/2" OD 4 1/4" ID TO TD
← PID DOWN, WOULD NOT START BACK UP.

Converted to Well: Yes ✓ No _____ Well I.D. #: 16MWT07

WELL NO.: 16MWT08

Tetra Tech NUS, Inc.

BEDROCK MONITORING WELL SHEET WELL INSTALLED IN BEDROCK

PROJECT CRANE NSWC	LOCATION SWMU 16	DRILLER JON KEIFER
PROJECT NO. 9060	BORING 16MWT08	DRILLING METHOD ROTO SONIC
DATE BEGUN 11-7-03	DATE COMPLETED 11-9-03	
FIELD GEOLOGIST FRED W. RAMSER		DEVELOPMENT METHOD SURGE/BAILER/WATERA
GROUND ELEVATION 759.57	DATUM NAVD 88	

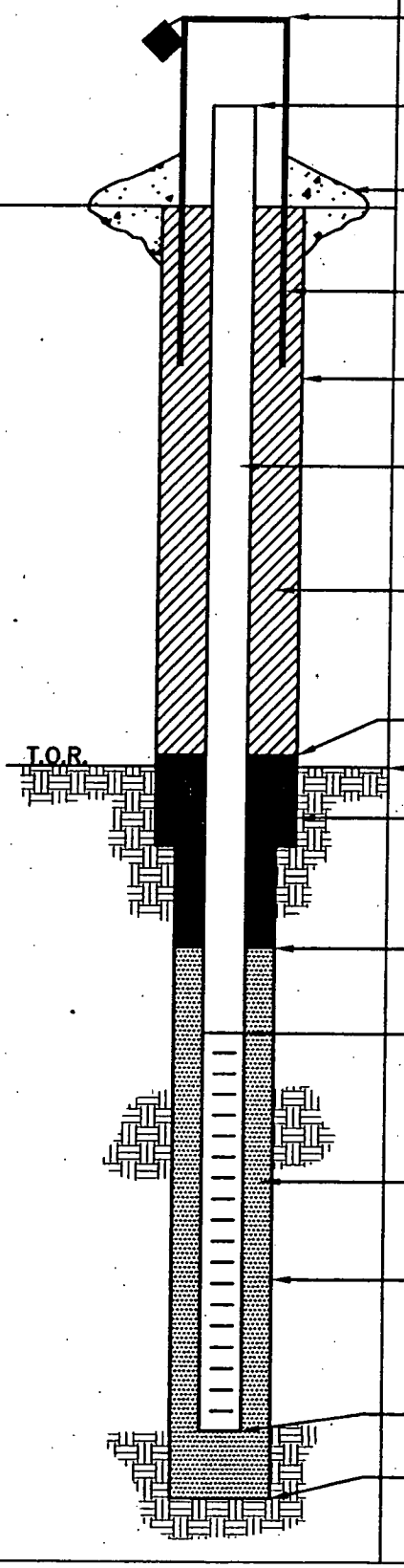

ELEVATION/HEIGHT OF TOP OF SURFACE CASING: 761.69 2.1

ELEVATION/HEIGHT TOP OF RISER: 761.56/2.0

TYPE OF SURFACE SEAL: CONCRETE 4'x4'x6"

I.D. OF SURFACE CASING: 4"x4" SQ

DIAMETER OF HOLE: 11"

RISER PIPE I.D.: 2"

TYPE OF RISER PIPE: SCH.40 PVC

TYPE OF BACKFILL: BENTONITE "PURE GOLD" CHIPS CETCO

6" ISOLATION CASING GROUTED IN USING CEMENT/BENTONITE TO 38.5' BGS.

ELEVATION/DEPTH TOP OF SEAL: 754.57/5'

ELEVATION/DEPTH TOP OF BEDROCK: 753.07/6.5'

TYPE OF SEAL: BENTONITE PURE GOLD CHIP CETCO

ELEVATION/DEPTH TOP OF SAND: 677.57/82

ELEVATION/DEPTH TOP OF SCREEN: 674.57/85

TYPE OF SCREEN: PVC

SLOT SIZE x LENGTH: 0.02 x 10'

I.D. SCREEN: 2"

TYPE OF SAND PACK: Qtz SAND 10/30 SEP / 18B

DIAMETER OF HOLE IN BEDROCK: 5"

CORE/REAM: CORE

ELEVATION/DEPTH BOTTOM SCREEN: 664.57/95

ELEVATION/DEPTH BOTTOM OF SAND: 660.57/99

ELEVATION/DEPTH BOTTOM OF HOLE: 660.57/99

BACKFILL MATERIAL BELOW SAND: NONE

ACAD:FORM_MWINBR.dwg 07/20/99 INL

Tetra Tech NUS, Inc.

BORING LOG

PROJECT NAME: Crane NSWC
PROJECT NUMBER: 9060
DRILLING COMPANY: BOWSER MORNER
DRILLING RIG: VERSA-SONIC

BORING No.: 16MWT08
DATE: 11-7-03
GEOLOGIST: FRED W RAMSER
DRILLER: DENNIS SINK

Sample No. and Type or RQD	Depth (Ft.) or Run No.	Blows / 6" or RQD (%)	Sample Recovery / Sample Length	Lithology Change (Depth/Ft.) or Screened Interval	Soil Density/ Consistency or Rock Hardness	Color	Material Classification	USCS *	Remarks	PID/FID Reading (ppm) Sample	Sampler BZ	Borehole**	Driller BZ**
							MOD BRN SILT + CLAY		TOP SOIL				
							↓ + f-g SAND		GRAVELS MOIST				
						BRN	GRADING TO			12			
							A DECOMPOSED		RELEC LAM.				
	5						SANDSTONE		W/SILTSTONE				0
							LGT YEL BRN		WEATHERED				
				TOP OF BD RK			W/ GREY + BRN		SANDSTONE				
					MED SOFT		SANDSTONE - LAM. LO A FRAC		FE STAINING IRREGULAR LAM				
	10				SOFT	LT GREY	MUDSTONE W/	BR					
						BRN	STIFF CLAY			14.2			
						YEL BRN	10'-11'						
							SOFT TO						
S-1		30%					MED STIFF						0
	15						CLAY+SILT						
							(STRONGLY WEATHERED MUDSTONE)						
										16			
			7.5/10		MED SOFT	YEL BRN	SANDSTONE -LAM FE STAINING	V					
	20				MED SOFT	GREY	SILT STONE	V.BR	FRIABLE				0
							GRADES TO BLK LAM. GREY + BLK		STRONGLY WEATHERED @ 20-20.5 V. SOFT				
					SOFT	DK GREY	MUD STONE						
S-2						YEL	SANDSTONE		WEATHERED	16			
						BRN	ABUNDANT Fe STAIN	V.BR					
	25	10%					LAM.						

* When rock coring, enter rock brokeness.

** Include monitor reading in 6 foot intervals @ borehole. Increase reading frequency if elevated reponse read.

Drilling Area Background (ppm): 0

Remarks: SET CASING @ 38.5' BGS. USING 8" ID DRILL PIPE (11" OUTSIDE DIA)

Converted to Well: Yes ✓ No ____ Well I.D. #: 16MWT08

Tetra Tech NUS, Inc.

BORING LOG

PROJECT NAME: Crane NSWC
PROJECT NUMBER: 9060
DRILLING COMPANY: BAUSER MORNER
DRILLING RIG: VERSA SONIC

BORING No.: 16MWT08
DATE: 11-7-03
GEOLOGIST: FRED WRAMSER
DRILLER: DENNIS SINIC

Sample No. and Type or RQD	Depth (Ft.) or Run No.	Blows / 6" or RQD (%)	Sample Recovery / Sample Length	Lithology Change (Depth/Ft.) or Screened Interval	MATERIAL DESCRIPTION: Soil Density/ Consistency or Rock Hardness	Color	Material Classification	USCS *	Remarks	PID/FID Reading (ppm): Sample	Sampler BZ	Borehole**	Driller BZ**
S-2					MED SOFT	YEL BRN	SANDSTONE		LESS WEATHERED				
									DOWNWARD				
			6.5/10							5			
					MED HARD	YEL	SANDSTONE	BR					
	30					BRN	ABUNDANT						0
							FUGS						
S-3							LAM. TO			48			
							THINLY						
		10%				DK BRN	BEDDED						0
	35					35-37	LOS FRAC.						
							TO HOR.						
							X-BEDDING						
			6.5/10							6			
	40				SOFT	LT GREY	MUDSTONE	BL					0
							ROCK FRAG						
							OF CLAY + SILTSTONE						
					SOFT	DK GREY	MUDSTONE			10			
S-4							ROCK FRAG.						
	45	95%					OF CLAYSTONE						0
							+ SILTSTONE						
			10/10							12			
	50				SOFT	DK GREY	CLAYEY SILTSTONE						

* When rock coring, enter rock brokeness.

** Include monitor reading in 6 foot intervals @ borehole. Increase reading frequency if elevated reponse read.

Drilling Area Background (ppm): 0

Remarks: BEGAN DRILLING BELOW CASING 11-8-04
START @ 39' → FINISH @ 79' 11-8-04

Converted to Well: Yes ✓ No _____ Well I.D. #: 16MWT08

Tetra Tech NUS, Inc.

BORING LOG

PROJECT NAME: Crane NSWC
PROJECT NUMBER: 9060
DRILLING COMPANY: BOWSER MORNER
DRILLING RIG: VERSA-SONIC

BORING No.: 16MWT08
DATE: 11-8-03
GEOLOGIST: FRED W RAMSER
DRILLER: DENNIS SINK

Sample No. and Type or RQD	Depth (Ft.) or Run No.	Blows / 6" or RQD (%)	Sample Recovery / Sample Length	Lithology Change (Depth/Ft.) or Screened Interval	MATERIAL DESCRIPTION: Soil Density/ Consistency or Rock Hardness	Color	Material Classification	USCS *	Remarks	PID/FID Reading (ppm): Sample	Sampler BZ	Borehole**	Driller BZ**
					SOFT	DK GREY	CLAYEY SILTSTONE	V.BR					
							-FISSIL			10			
							-LAM. TO						
							V. THIN BEDDED					0	
S5	55	0%					-PLANT FOSSILS						
							(BLK) ABUNDANT						
					SOFT	MED GREY	SANDY SILTSTONE			8			
							-FISSIL						
			5/10				-LAM. TO V. THIN BEDS.					0	
	60				SOFT	DK	CLAYEY SILTSTONE	V.BR					
						GREY	-FISSIL						
							-LAM. TO V. THIN BEDS			13		0	
S-6		5%				DK	SANDY SILTSTONE						
	65					GREY	VUGS						
							IRREGULAR LAM						
					SOFT	BR	CLAYEY SILTSTONE			14			
							LAM. (V. FINE)						
			5/10									0	
	70				SOFT	DK	CLAYEY SILTSTONE	BL					
						GREY	BLOCKY W/ROCK						
							FRAG.						
S-7						DK GREY	SILTSTONE	V.BR				0	
							LAM. TO V. THIN			10			
	75						BEDDED						

* When rock coring, enter rock brokeness.

** Include monitor reading in 6 foot intervals @ borehole. Increase reading frequency if elevated reponse read.

Drilling Area Background (ppm): 0

Remarks:

Converted to Well: Yes ✓ No _____ Well I.D. #: 16MWT08

WELL NO.: 16MWT09

Tetra Tech NUS, Inc.

BEDROCK
MONITORING WELL SHEET
WELL INSTALLED IN BEDROCK

PROJECT NSWC CRANE	LOCATION CRANE IN	DRILLER BOWSER-MORNER
PROJECT NO. 9060	BORING 16MWT09	DRILLING METHOD HSA
DATE BEGUN 11-8-03	DATE COMPLETED 11-8-03	
FIELD GEOLOGIST M.G. COCHRAN		DEVELOPMENT METHOD SURGE/BAILER
GROUND ELEVATION 762.43	DATUM NAVD 88	

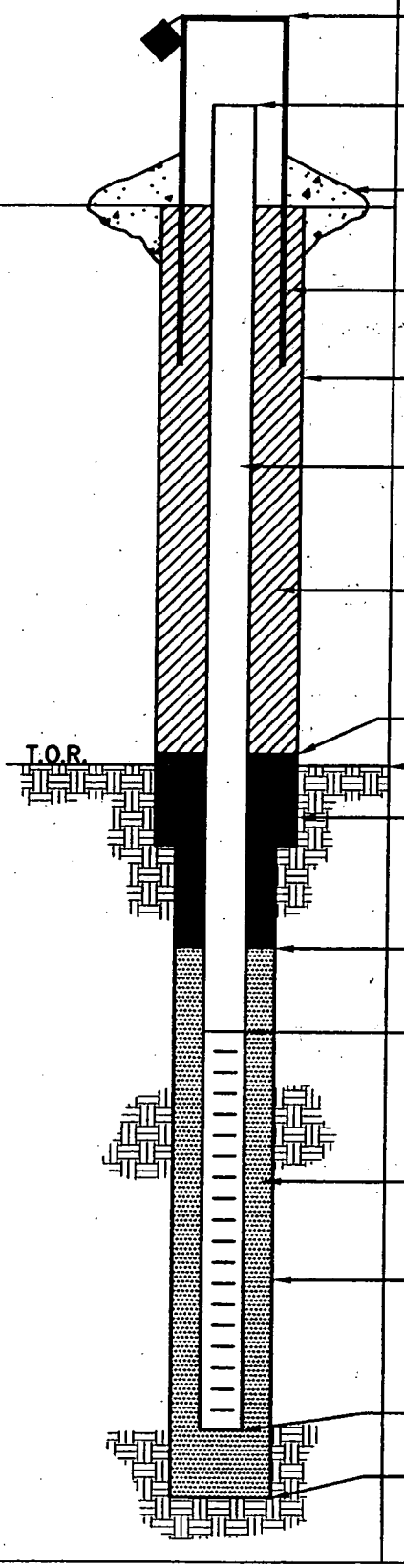

ELEVATION/HEIGHT OF TOP OF SURFACE CASING: 764.47/2.1

ELEVATION/HEIGHT TOP OF RISER: 764.28/1.9

TYPE OF SURFACE SEAL: CONCRETE

I.D. OF SURFACE CASING: 4" x 4" SQ STEEL

DIAMETER OF HOLE: 8 1/2"

RISER PIPE I.D.: 2"

TYPE OF RISER PIPE: PVC SCHEDULE 40

TYPE OF BACKFILL: CETCO PURE GOLD MEDIUM CHIPS

ELEVATION/DEPTH TOP OF SEAL: 759.43/3

ELEVATION/DEPTH TOP OF BEDROCK: 755.43/7

TYPE OF SEAL: CETCO PURE GOLD MEDIUM CHIPS

ELEVATION/DEPTH TOP OF SAND: 749.43/13

ELEVATION/DEPTH TOP OF SCREEN: 747.43/15

TYPE OF SCREEN: PVC

SLOT SIZE x LENGTH: .020 X 10'

I.D. SCREEN: 2"

TYPE OF SAND PACK: BEST MEDIUM SAND

DIAMETER OF HOLE IN BEDROCK: 8 1/2"

CORE/REAM:

ELEVATION/DEPTH BOTTOM SCREEN: 737.43/25

ELEVATION/DEPTH BOTTOM OF SAND: 737.43/25

ELEVATION/DEPTH BOTTOM OF HOLE: 737.43/25

BACKFILL MATERIAL BELOW SAND: NA

ACAD: FORM_MWINBR.dwg 07/20/99 INL

Tetra Tech NUS, Inc.

BORING LOG

PROJECT NAME: Crane NSWC
PROJECT NUMBER: 9060
DRILLING COMPANY: BOWSER MORNER
DRILLING RIG: VERSA-SONIC

BORING No.: 16MWT08
DATE: 11-8-03
GEOLOGIST: FRED W. RAMSER
DRILLER: JON REIFER

Sample No. and Type or RQD	Depth (Ft.) or Run No.	Blows / 6" or RQD (%)	Sample Recovery / Sample Length	Lithology Change (Depth/Ft.) or Screened Interval	MATERIAL DESCRIPTION: Soil Density/ Consistency or Rock Hardness	Color	Material Classification	USCS*	Remarks	PID/FID Reading (ppm): Sample	Sampler BZ	Borehole**	Driller BZ**
					SOFT	DK GREY	CLAYEY SILTSTONE	V.BR					
		30%					LAM. TO V.THINLY			12			
							BEDDED						
			9/10						HIT HARD SAND				
	80				HARD	LT GRY	SAND STONE	BR	STONE @ 79'				
							MED BEDDED						
							CLAYEY						
						DK	SILTSTONE	V.BR		11			
						GREY	LAM. TO V.THIN						
							BEDS						
S-8	85	2%											
					MED HARD	GREY	SILTY SANDSTONE	BR					
							LAM TO THIN						
							BEDDED						
			9.5/10				PLANT FOSSILS		GRADES TO	12			
	90								SANDY SILT STONE				
					SOFT	GREY	SANDY SILTSTONE	BR					
							LAM.						
					SOFT	DK	SILTSTONE	V.BR					
						GREY	CLAYEY						
S-9	95	0%					LAM. V.THIN						
							BEDDED						
	9												
					MED	GREY	SANDY SILTSTON	BR					
			8.5/10		HARD		LAM. TO V.THIN						
							BEDS.						

* When rock coring, enter rock brokeness.
** Include monitor reading in 6 foot intervals @ borehole. Increase reading frequency if elevated reponse read.

Drilling Area Background (ppm): 0

Remarks: SCREEN 85-95 SAND 82-99. 11-9-03
BENTONITE

Converted to Well: Yes ✓ No _____ Well I.D. #: 16MWT08

Tetra Tech NUS, Inc.

BORING LOG

PROJECT NAME: Crane NSWC
PROJECT NUMBER: 9060
DRILLING COMPANY: BOWSER-MORNER
DRILLING RIG: CME 550 ATV

BORING No.: 16MWT09
DATE: 11-8-03
GEOLOGIST: M. G. COCHRAN
DRILLER: J. WALSH

Sample No. and Type or RQD	Depth (Ft.) or Run No.	Blows / 6" or RQD (%)	Sample Recovery / Sample Length.	Lithology Change (Depth/Ft.) or Screened Interval	MATERIAL DESCRIPTION: Soil Density/ Consistency or Rock Hardness	Color	Material Classification	USCS *	Remarks	PID/FID Reading (ppm): Sample	Sampler BZ	Borehole**	Driller BZ**
0						BR	TOPSOIL			—	—	0	0
						BR	CLAY + SILT						
5													
				7.0									
				XXXX		BR	SHALE BEDROCK						
10													
15													
20													
25							TD 25'						

* When rock coring, enter rock brokeness.

** Include monitor reading in 6 foot intervals @ borehole. Increase reading frequency if elevated reponse read.

Drilling Area Background (ppm): 0

Remarks: HSA 4¼ ID, 8 ½ OD TO TD

Converted to Well: Yes ✓ No _____ Well I.D. #: 16MWT09

WELL NO.: 16MWT10

Tetra Tech NUS, Inc.

BEDROCK MONITORING WELL SHEET WELL INSTALLED IN BEDROCK

PROJECT: CRANE
PROJECT NO.: 9060
DATE BEGUN: 11/9/03
FIELD GEOLOGIST: M. G. COCHRAN
GROUND ELEVATION: 761.93

LOCATION: CRANE IN
BORING: 16MWT10
DATE COMPLETED: 11-9-03
DATUM: NAVD 88

DRILLER: J. WALSH
DRILLING METHOD: HSA
DEVELOPMENT METHOD: BAILER/SURGE/PUMP

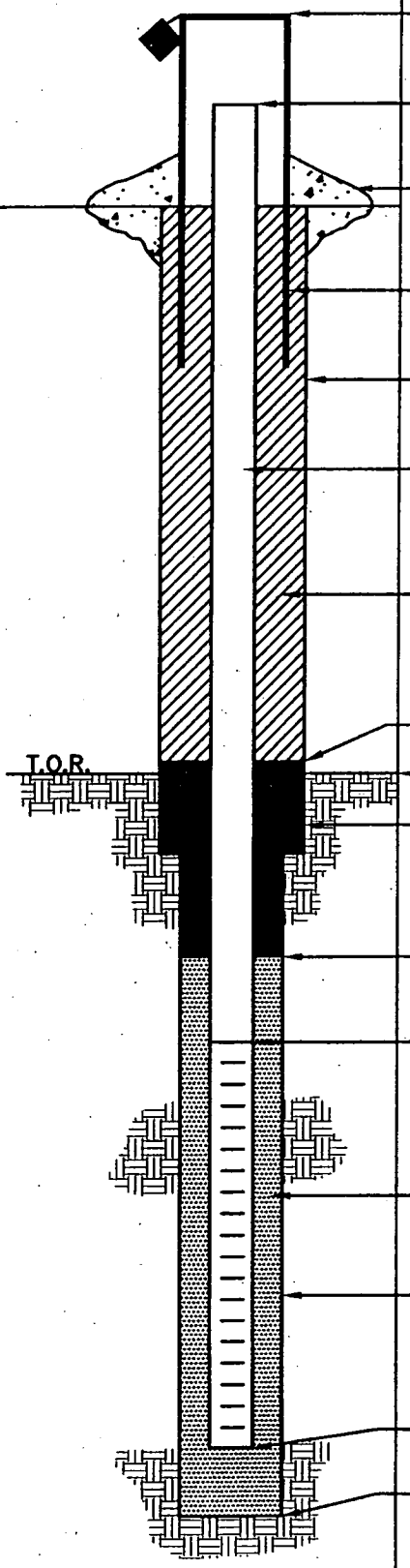

ELEVATION/HEIGHT OF TOP OF SURFACE CASING: 764.48/ 2.5

ELEVATION/HEIGHT TOP OF RISER: 764.43/ 2.5

TYPE OF SURFACE SEAL: CONCRETE

I.D. OF SURFACE CASING: 4" x 4" SQ STEEL

DIAMETER OF HOLE: 8 1/2"

RISER PIPE I.D.: 2"
TYPE OF RISER PIPE: PVC SCH 40

TYPE OF BACKFILL: CETCO PURE GOLD BENTONITE CHIPS

ELEVATION/DEPTH TOP OF SEAL: 758.93/ 3

ELEVATION/DEPTH TOP OF BEDROCK: 753.43 8.5'

TYPE OF SEAL: CETCO PURE GOLD BENTONITE CHIPS

ELEVATION/DEPTH TOP OF SAND: 749.93/ 12

ELEVATION/DEPTH TOP OF SCREEN: 747.93/ 14
TYPE OF SCREEN: PVC SLOTTED
SLOT SIZE x LENGTH: .020 x 10'
I.D. SCREEN: 2"

TYPE OF SAND PACK: GLOBAL MEDIUM SAND

DIAMETER OF HOLE IN BEDROCK: 8 1/2
CORE/REAM:

ELEVATION/DEPTH BOTTOM SCREEN: 737.93/ 24
ELEVATION/DEPTH BOTTOM OF SAND: 736.93/ 25
ELEVATION/DEPTH BOTTOM OF HOLE: 736.93/ 25
BACKFILL MATERIAL BELOW SAND: NA

ACAD:FORM_MWINBR.dwg 07/20/99 INL

Tetra Tech NUS, Inc.

BORING LOG

PROJECT NAME: Crane NSWC
PROJECT NUMBER: 9060
DRILLING COMPANY: BOWSER-MORNER
DRILLING RIG: CME 550 ATV

BORING No.: 16MWT10
DATE: 11-9-03
GEOLOGIST: M. G. COCHRAN
DRILLER: J. WALSH

Sample No. and Type or RQD	Depth (Ft.) or Run No.	Blows / 6" or RQD (%)	Sample Recovery / Sample Length	Lithology Change (Depth/Ft.) or Screened Interval	MATERIAL DESCRIPTION: Soil Density/ Consistency or Rock Hardness	Color	Material Classification	USCS *	Remarks	PID/FID Reading (ppm): Sample	Sampler BZ	Borehole**	Driller BZ**
							SEE LOG					0	0
							16MWT11 FOR						
							DESCRIPTION						
							TD 25						

* When rock coring, enter rock brokeness.

** Include monitor reading in 6 foot intervals @ borehole. Increase reading frequency if elevated reponse read.

Remarks:

Drilling Area Background (ppm): 0

Converted to Well: Yes ✓ No _____ Well I.D. #: 16MWT10

WELL NO.: 16MW11

Tetra Tech NUS, Inc.

BEDROCK
MONITORING WELL SHEET
WELL INSTALLED IN BEDROCK

PROJECT CRANE	LOCATION SWMU 16	DRILLER JON KEIFER
PROJECT NO. 9060	BORING 16MW11	DRILLING METHOD ROTO-SONIC
DATE BEGUN 11-8-03	DATE COMPLETED 11-11-03	
FIELD GEOLOGIST FRED W RAMSER		DEVELOPMENT METHOD BAILER/PURGE
GROUND ELEVATION 763.23	DATUM NAVD88	

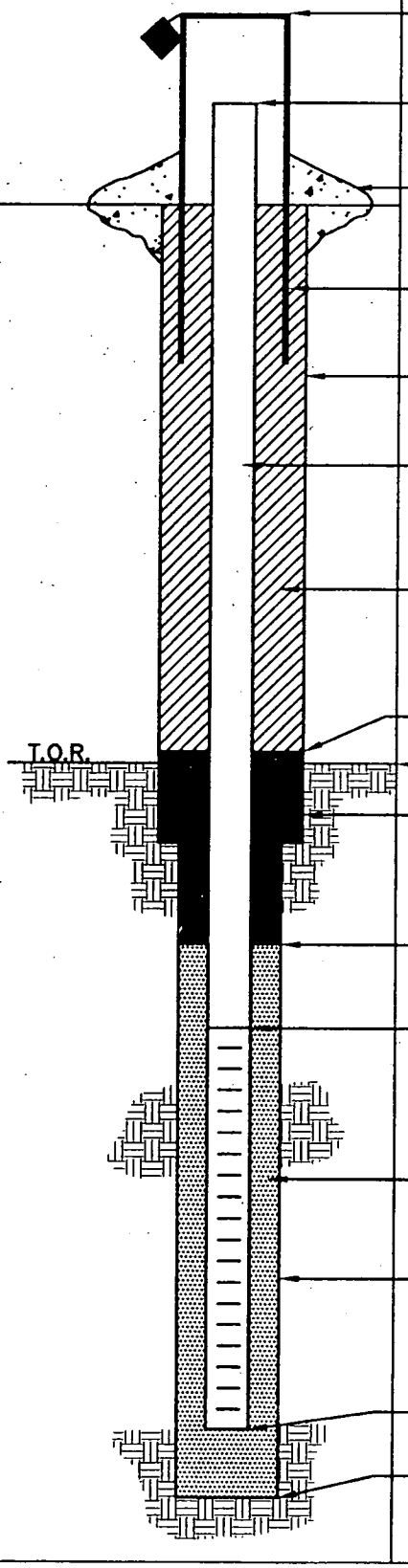

ELEVATION/HEIGHT OF TOP OF SURFACE CASING: 765.47/2.24

ELEVATION/HEIGHT TOP OF RISER: 765.24/2.0

TYPE OF SURFACE SEAL: CONCRETE 4'x4'x6"

I.D. OF SURFACE CASING: 4"x4" SQ

DIAMETER OF HOLE: 11"

RISER PIPE I.D.: 2"

TYPE OF RISER PIPE: SCH. 40 PVC

TYPE OF BACKFILL: BENTONITE "PURE GOLD" CHIPS CETCO, 6" ISOLATION CASING GROUTED IN USING CEMENT/BENTONITE TO 38' BGS

ELEVATION/DEPTH TOP OF SEAL: 758.23/5'

ELEVATION/DEPTH TOP OF BEDROCK: 754.73/8.5'

TYPE OF SEAL: BENTONITE PURE GOLD CHIPS CETCO

ELEVATION/DEPTH TOP OF SAND: 680.23/83

ELEVATION/DEPTH TOP OF SCREEN: 677.23/86

TYPE OF SCREEN: PVC

SLOT SIZE x LENGTH: 0.02 x 10'

I.D. SCREEN: 2"

TYPE OF SAND PACK: QTZ SAND 10/30 SEP/18B

DIAMETER OF HOLE IN BEDROCK: 5"

CORE/REAM: CORE

ELEVATION/DEPTH BOTTOM SCREEN: 667.23/96

ELEVATION/DEPTH BOTTOM OF SAND: 665.23/98

ELEVATION/DEPTH BOTTOM OF HOLE: 665.23/98

BACKFILL MATERIAL BELOW SAND: NONE

ACAD:FORM_MWINBR.dwg 07/20/99 INL

Tetra Tech NUS, Inc.

BORING LOG

PROJECT NAME: Crane NSWC
PROJECT NUMBER: 9060
DRILLING COMPANY: BOWSER MORNER
DRILLING RIG: VERSA SONIC

BORING No.: 16MWT11
DATE: 11-8-03
GEOLOGIST: FRED W. RAMSER
DRILLER: JON KEIFER

Sample No. and Type or RQD	Depth (Ft.) or Run No.	Blows / 6" or RQD (%)	Sample Recovery / Sample Length	Lithology Change (Depth/Ft.) or Screened Interval	Soil Density/ Consistency or Rock Hardness	Color	Material Classification	USCS *	Remarks	PID/FID Reading (ppm) Sample	Sampler BZ	Borehole**	Driller BZ**
					STIFF	MED BRN	CLAYEY SAND TOP SOIL	SC/SM	4" VIBRO CORE				
							f-g + SILT		SPL				
					LOOSE								
S-1							SILT GRADES FROM						
						MED	DEC. BORK TO						
	5					BRN	STRONGLY WEATHERED						
						YEL BRN	BORK TO 7.5' SAND STONE		MOTTLED:				
					MED SOFT		7.5' - 8.5'		Fe STAINING				
			8.5/8.5				WEATHERED BORK SAND STONE		GREY, ORG.				
				TOP OF BORK @ 8.5'					RELIC LAM.				
	10				VERY SOFT	YEL BRN	MUDSTONE	V.BR	UNCONSOLIDATED				
									DECOMPOSED?				
					VERY SOFT	GREY	MUDSTONE						
S-2													
		5%			SOFT	PALE RED	SANDSTONE f-g		WEATHERED				
	15				VERY		LAM - V.F. BEDDING	V.BR					
					SOFT	GREYISH RED	SANDSTONE						
							F. GRAIN. LAM. - V.F. BEDDING						
			8/10										
	20				SOFT	GREY	SANDY SILTSTONE	V.BR					
						DK GREY	LAM.		GRADES				
S-3							V. FINE BEDDING		TO A				
							ALT DK GREY		SILTSTONE				
		0%					+ GREY		DOWNWARD				
	25						LAM.		TO A CLAYEY SILTSTONE				

* When rock coring, enter rock brokeness.

** Include monitor reading in 6 foot intervals @ borehole. Increase reading frequency if elevated reponse read.

Drilling Area Background (ppm): —

Remarks: USED 4"Ø ID DRILL PIPE w/CORE BIT TO SPL. 10' RUNS
USED 8"Ø ID DRILL PIPE TO INSTALL 6" PSO. INTO A 11" HOLE
INSTALLED WELL 11-11-03

Converted to Well: Yes ✓ No _____ Well I.D. #: 16MWT11

Tetra Tech NUS, Inc.

BORING LOG

PROJECT NAME: Crane NSWC
PROJECT NUMBER: 9060
DRILLING COMPANY: BOWSER MORNER
DRILLING RIG: VERSA SONIC

BORING No.: 16MWT11
DATE: 11-8-03
GEOLOGIST: FRED WRAMSER
DRILLER: JON KEIFER

Sample No. and Type or RQD	Depth (Ft.) or Run No.	Blows / 6" or RQD (%)	Sample Recovery / Sample Length	Lithology Change (Depth/Ft.) or Screened Interval	Soil Density/ Consistency or Rock Hardness	Color	Material Classification	USCS*	Remarks	PID/FID Reading (ppm) Sample	Sampler BZ	Borehole**	Driller BZ**
93 CONT					SOFT	DK GREY	CLAYEY SILTSTONE	V. BR	(SHALE)				
					SOFT	DK GREY	MUDSTONE						
	30				SOFT	DK GREY	CLAYEY SILTSTONE	V.BR					
								BR					
							IRREGULAR LAM.						
S-4		54%							POOR REC.				
	35								MAY BE DUE				
									TO COAL BED.				
									OR V. BRITTLE				
	38		25/10						SHALE FALLING OUT OF DRILL				
								V.BR	PIPE				
	40				MED SOFT		SANDY SILTSTONE		BLACK CUTTINGS				
					SOFT		MUDSTONE LAM. DK GRY ALT LT GREY OCC. FOSSIL	BL	SEEN WHEN				
									DRILLING W/				
S-5		20%			MED SOFT	LT. GREY	SANDSTONE		8" PIPE				
							CROSS BEDDING	BL	BEGIN TO				
	45						OCC PLANT FOSSIL		DRILL BELOW				
							BLK ON LAM.		ISO CASING				
							F. BEDDED		11-11-03				
			7.0/10				LO ∆ FRAC.		OCC. VUGS.				
					SOFT	DK GREY	CLAYEY SILTSTONE	V. BR					
	50												

* When rock coring, enter rock brokeness.

** Include monitor reading in 6 foot intervals @ borehole. Increase reading frequency if elevated reponse read.

Drilling Area Background (ppm): —

Remarks: STARTED WELL 11-8-03 INSTALLED 6" ISO CASING.
CONT. DRILLING BELOW CASING 11-11-03 @ 38' BGS
STEADY RAIN PID NOT USED. 11-11-03

Converted to Well: Yes ✓ No ____ Well I.D. #: 16MWT11

Tetra Tech NUS, Inc.

BORING LOG

PROJECT NAME: Crane NSWC
PROJECT NUMBER: 9060
DRILLING COMPANY: BOWSER MORNER
DRILLING RIG: VERSA-SONIC

BORING No.: 16MWT 11
DATE: 11-11-03
GEOLOGIST: FRED W RAMSER
DRILLER: JON KEIFER

Sample No. and Type or RQD	Depth (Ft.) or Run No.	Blows / 6" or RQD (%)	Sample Recovery / Sample Length	Lithology Change (Depth/Ft.) or Screened Interval	MATERIAL DESCRIPTION: Soil Density/ Consistency or Rock Hardness	Color	Material Classification	USCS *	Remarks	PID/FID Reading (ppm): Sample	Sampler BZ	Borehole**	Driller BZ**
	50												
					SOFT	DK GREY	CLAYSILTSTONE	V.BR					
S6							FISSIL						
							LAM. TO						
		0%					V. FINEBED.						
	55												
			10/10										
					SOFT	DK GREY	AS ABOVE	V.BR					
	60												
		0%											
S7													
	65												
			10/10										
					SOFT	BLK	CLAYEYSILTSTONE	V.BR					
	70						FISSIL. LAM.						
							TO V.F. BEDDED						
S8													
		20%			HARD	LT GREY	SANDSTONE	BL					
							POOR BEDDING						
	75						SMALL BEDS						

* When rock coring, enter rock brokeness.

** Include monitor reading in 6 foot intervals @ borehole. Increase reading frequency if elevated reponse read.

Remarks: STEADY RAIN PID NOT USED 11-11-03

Drilling Area Background (ppm): —

Converted to Well: Yes ✓ No _____ Well I.D. #: 16MWT 11

Tetra Tech NUS, Inc.

BORING LOG

PROJECT NAME: Crane NSWC
PROJECT NUMBER: 9060
DRILLING COMPANY: BOWSER MORNER
DRILLING RIG: VERSA SONIC

BORING No.: 16MWT11
DATE: 11-11-03
GEOLOGIST: FRED WRAMSER
DRILLER: JON KEIFER

Sample No. and Type or RQD	Depth (Ft.) or Run No.	Blows / 6" or RQD (%)	Sample Recovery / Sample Length	Lithology Change (Depth/Ft.) or Screened Interval	MATERIAL DESCRIPTION: Soil Density/ Consistency or Rock Hardness	Color	Material Classification	USCS *	Remarks	PID/FID Reading (ppm): Sample	Sampler BZ	Borehole**	Driller BZ**
	75				HARD	LT GREY	SAND STONE	Bl					
			7.5 / 10										
					SOFT	DK GREY	CLAYEY SILTSTONE LAM. TO V.F BEDDING	V.Br					
	80						FISSIL						
S-9													
	85	0%											
					MED SOFT	GREY	SILTY SANDSTONE LAM. THIN BEDDED ALT. GREY & DK. GREY	Br					
					MED SOFT	GREY	SAND STONE	Br					
	90						LAM TO THIN BEDS ALT. GREY &						
S-10		30%			MED HARD		BLK LAM. OCC. IRREGULAR LAM. VUGS	Bl					
	95						LOX FRAGS. (RARE)						
			10 / 10		SOFT	BLK	COAL BRITTLE	V.Br					
	100												

* When rock coring, enter rock brokeness.

** Include monitor reading in 6 foot intervals @ borehole. Increase reading frequency if elevated reponse read.

Drilling Area Background (ppm): —

Remarks: STEADY RAIN NO PID READINGS
SCREEN 86-96
SAND 83-98 BENTONITE 5' - 83'

Converted to Well: Yes ✓ No _____ Well I.D. #: 16MWT11

WELL NO.: 16MWT12

Tetra Tech NUS, Inc.

BEDROCK
MONITORING WELL SHEET
WELL INSTALLED IN BEDROCK

PROJECT CRANE	LOCATION CRANE IN	DRILLER J. WALSH
PROJECT NO. 9060	BORING 16MWT12	DRILLING METHOD HSA
DATE BEGUN 11-7-03	DATE COMPLETED 11-7-03	
FIELD GEOLOGIST M.G. COCHRAN		DEVELOPMENT METHOD BAILER/ SURGE/PUMP
GROUND ELEVATION 753.23	DATUM NAVD 88	

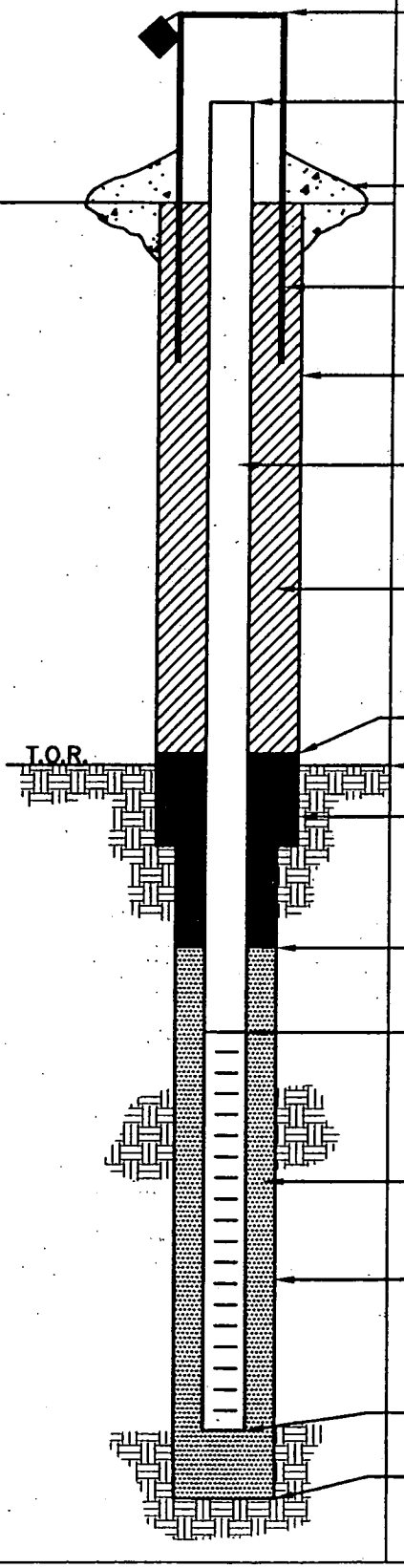

ELEVATION/HEIGHT OF TOP OF SURFACE CASING: 755.54 2.3

ELEVATION/HEIGHT TOP OF RISER: 755.45 2.2

TYPE OF SURFACE SEAL: CONCRETE

I.D. OF SURFACE CASING: 4"x4" SQ STEEL

DIAMETER OF HOLE: 8 1/2"

RISER PIPE I.D.: 2"

TYPE OF RISER PIPE: PVC SCHEDULE 40

TYPE OF BACKFILL: CETCO PURE GOLD MEDIUM CHIPS

ELEVATION/DEPTH TOP OF SEAL: 750.23 3

ELEVATION/DEPTH TOP OF BEDROCK: 745.23 / 8

TYPE OF SEAL: CETCO PURE GOLD MEDIUM CHIPS

ELEVATION/DEPTH TOP OF SAND: 739.23 / 14

ELEVATION/DEPTH TOP OF SCREEN: 737.23 / 16

TYPE OF SCREEN: PVC SLOTTED

SLOT SIZE x LENGTH: .020 X 10'

I.D. SCREEN: 2"

TYPE OF SAND PACK: QTZ SAND 10/30

DIAMETER OF HOLE IN BEDROCK: 8 1/2"

CORE/REAM:

ELEVATION/DEPTH BOTTOM SCREEN: 727.23 / 26

ELEVATION/DEPTH BOTTOM OF SAND: 726.73 / 26.5

ELEVATION/DEPTH BOTTOM OF HOLE: 726.73 / 26.5

BACKFILL MATERIAL BELOW SAND: NA

ACAD: FORM_MWINBR.dwg 07/20/99 INL

Tetra Tech NUS, Inc.

BORING LOG

PROJECT NAME: Crane NSWC
PROJECT NUMBER: 9060
DRILLING COMPANY: BOWSER-MORNER
DRILLING RIG: CME 550

BORING No.: 16MWT12
DATE: 11-7-03
GEOLOGIST: M. G. COCHRAN
DRILLER: J. WALSH

Sample No. and Type or RQD	Depth (Ft.) or Run No.	Blows / 6" or RQD (%)	Sample Recovery / Sample Length	Lithology Change (Depth/Ft.) or Screened Interval	MATERIAL DESCRIPTION: Soil Density/ Consistency or Rock Hardness	Color	Material Classification	USCS *	Remarks	PID/FID Reading (ppm): Sample	Sampler BZ	Borehole**	Driller BZ**
	0												
S1		3/7	1.4/		M. DENSE	DK BR	CLAYEY SILT		DAMP, FILL-8'	.5	.5	.5	.5
	2	6/6	2.0			LT BRN	CLAYEY SILT						
S2		6/8	1.2/		M. DENSE	LT BRN	CLAYEY SILT			.5	.5	.5	.5
	4	10/12	2.0										
S3		5/11	1.7/		M. DENSE	GR BRN	CLAYEY SILT		V. F. LAMS W GREY-BR STREAKS	.5	.5	.5	.5
	6	15/24	2.0										
S4		17/28	1.2/		V. DENSE	RD BRN	CLAYEY SILT			.5	.5	.5	.5
	8	50	2.0	8.0					BL. VF LAMS AT BTM. POSS. COAL				
S5		28/50/.3	.4/		SOFT	PINK GREY	SHALE			.5	.5	.5	.5
	10		.8										
S5		50/5"	.4/			PINK GREY	SHALE		WEATHERED	.5	.6	.6	.6
	12												
S6		50/3"	.3/			DK GREY	SHALE		WEATHERED	.7	.7	.7	.7
	14		.8										
S7		50/4"	.3/			DK GREY	SHALE		WEATHERED	.7	.7	.7	.7
	16		.3										
S8		50/5"	.4/			DK GREY	SHALE		V.F. LAMS W LT GREY STREAKS	.6	.6	.6	.6
	18		.3										
S9		50/5"	.3/			DK GR	SHALE		VF LAMS W LT GREY STREAKS	.6	.6	.6	.6
	20		.3										
S10		50/5"	.5/			DK GR	SHALE			.6	.6	.6	.6
	22		.5										
S11		50/5"	.5/			DK GREY	SHALE			.6	.6	.6	.6
	24		.5										
S12			.5/			DK GREY	SHALE			.6	.6	.6	.6

* When rock coring, enter rock brokeness.

** Include monitor reading in 6-foot intervals @ borehole. Increase reading frequency if elevated reponse read.

Drilling Area Background (ppm): .5

Remarks:

Converted to Well: Yes ✓ No _____ Well I.D. #: 16MWT12

Tetra Tech NUS, Inc.

BORING LOG

PROJECT NAME: Crane NSWC
PROJECT NUMBER: 9060
DRILLING COMPANY: BOWSER-MORNER
DRILLING RIG: CME 550

BORING No.: 16MWT12
DATE: 11-7-03
GEOLOGIST: M.G. COCHRAN
DRILLER: J. WALSH

Sample No. and Type or RQD	Depth (Ft.) or Run No.	Blows / 6" or RQD (%)	Sample Recovery / Sample Length	Lithology Change (Depth/Ft.) or Screened Interval	MATERIAL DESCRIPTION: Soil Density/ Consistency or Rock Hardness	Color	Material Classification	USCS *	Remarks	PID/FID Reading (ppm): Sample	Sampler BZ	Borehole**	Driller BZ**
	26		.5			DK GREY	SHALE						
		50/5	.91							.5	.5	.5	.5
	28		.6			BL	COAL						
							TO 28.0						

* When rock coring, enter rock brokeness.

** Include monitor reading in 6 foot intervals @ borehole. Increase reading frequency if elevated reponse read.

Drilling Area Background (ppm): .5

Remarks: AUGURED TO 26.5'

Converted to Well: Yes ✓ No _____ Well I.D. #: 16MWT12

WELL NO.: 16MWT13

Tetra Tech NUS, Inc.

BEDROCK MONITORING WELL SHEET WELL INSTALLED IN BEDROCK

PROJECT NWSC CRANE	LOCATION CRANE, IN	DRILLER BOWSER-MORNER	
PROJECT NO. 9060	BORING 16MWT13	DRILLING METHOD HSA	
DATE BEGUN 11-11-03	DATE COMPLETED 11-11-03		
FIELD GEOLOGIST M G COCHRAN		DEVELOPMENT METHOD BAILER/SURGE	
GROUND ELEVATION 757.62	DATUM NAVD 88		

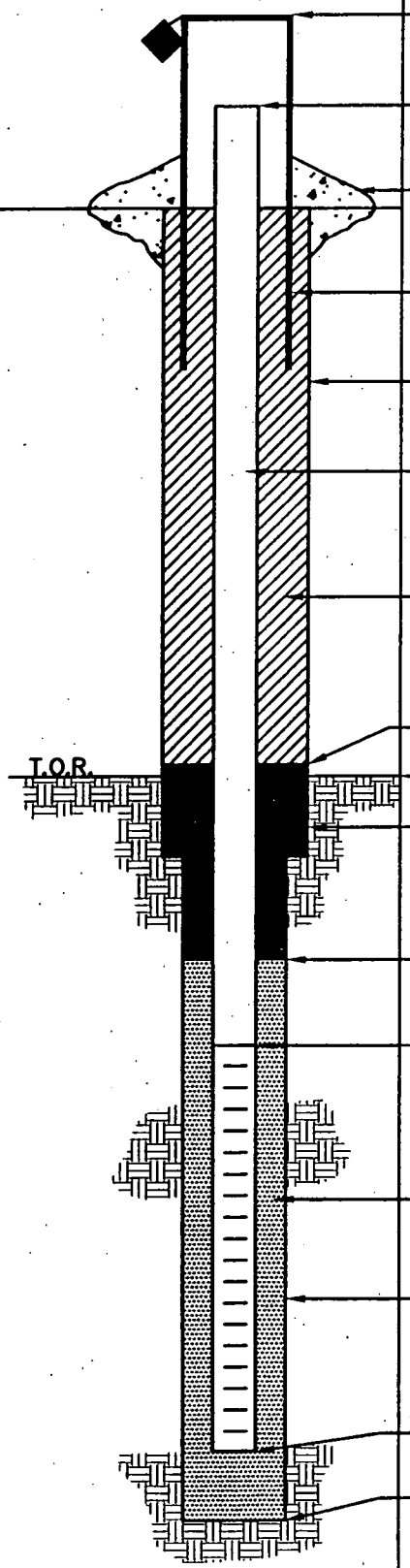

ELEVATION/HEIGHT OF TOP OF SURFACE CASING: 759.66/2.1

ELEVATION/HEIGHT TOP OF RISER: 759.57/2.0

TYPE OF SURFACE SEAL: CONCRETE

I.D. OF SURFACE CASING: 4" x 4" SQ STEEL

DIAMETER OF HOLE: 8 1/2"

RISER PIPE I.D.: 2"
TYPE OF RISER PIPE: PVC

TYPE OF BACKFILL: CETCO PURE GOLD MEDIUM CHIP

ELEVATION/DEPTH TOP OF SEAL: 754.62/3'

ELEVATION/DEPTH TOP OF BEDROCK: 747.62/10

TYPE OF SEAL: CETCO PURE GOLD MEDIUM CHIPS

ELEVATION/DEPTH TOP OF SAND: 751.62/6

ELEVATION/DEPTH TOP OF SCREEN: 749.62/8
TYPE OF SCREEN: PVC SLOTTED
SLOT SIZE x LENGTH: .020 X 10'
I.D. SCREEN: 2"

TYPE OF SAND PACK: GLOBAL MEDIUM SAND

DIAMETER OF HOLE IN BEDROCK: 8 1/2"
CORE/REAM:

ELEVATION/DEPTH BOTTOM SCREEN: 739.62/18
ELEVATION/DEPTH BOTTOM OF SAND: 738.62/19
ELEVATION/DEPTH BOTTOM OF HOLE: 738.62/19
BACKFILL MATERIAL BELOW SAND: NA

ACAD:FORM_MWINBR.dwg 07/20/99 INL

Tetra Tech NUS, Inc.

BORING LOG

PROJECT NAME: Crane NSWC
PROJECT NUMBER: 9000
DRILLING COMPANY: BOWSER MORNER
DRILLING RIG: CME 550

BORING No.: 16MWT13
DATE: 11-11-03
GEOLOGIST: M. COCHRAN
DRILLER: J. WALSH

Sample No. and Type or RQD	Depth (Ft.) or Run No.	Blows / 6" or RQD (%)	Sample Recovery / Sample Length	Lithology Change (Depth/Ft.) or Screened Interval	MATERIAL DESCRIPTION: Soil Density/ Consistency or Rock Hardness	Color	Material Classification	USCS *	Remarks	PID/FID Reading (ppm): Sample	Sampler BZ	Borehole**	Driller BZ**
						BRN	SANDY SILT	SM					
	3												
S1	4	2/3	1.2/		LOOSE	BRN	SANDY SILT	SM	DAMP, FILL	1.5	1.5	1.5	1.5
	5	2/2	2.0										
	8												
S2		3/10	0.9/		V DENSE	GR BRN	SANDY SILT.		DAMP.	–	–	–	–
	10	27/50/5"	2.0	10.0					GRADING INTO SILTSTONE @ BTM				
	13												
S3		50/5"	.4/			LT GREY	SHALY SILTSTONE		V.F. LAMS, DRY STREAKED WHITE	–	–	–	–
	15		.4										
							TD 18'						

* When rock coring, enter rock brokeness.

** Include monitor reading in 6 foot intervals @ borehole. Increase reading frequency if elevated reponse read.

Drilling Area Background (ppm): 1.5

Remarks: – INSTRUMENT DOWN, WILL NOT START BACK UP

Converted to Well: Yes ✓ No _____ Well I.D. #: 16MWT13

WELL NO.: 16MWT14

Tetra Tech NUS, Inc.

BEDROCK MONITORING WELL SHEET WELL INSTALLED IN BEDROCK

PROJECT NWSC CRANE	LOCATION CRANE, IN	DRILLER J. WALSH
PROJECT NO. 9060	BORING 16MWT14	DRILLING METHOD HSA
DATE BEGUN 11-7-03	DATE COMPLETED 11-7-03	
FIELD GEOLOGIST M.G. COCHRAN	DATE ABANDONED: 11-27-03	DEVELOPMENT METHOD NA
GROUND ELEVATION ~764.9	DATUM NAVD 88	

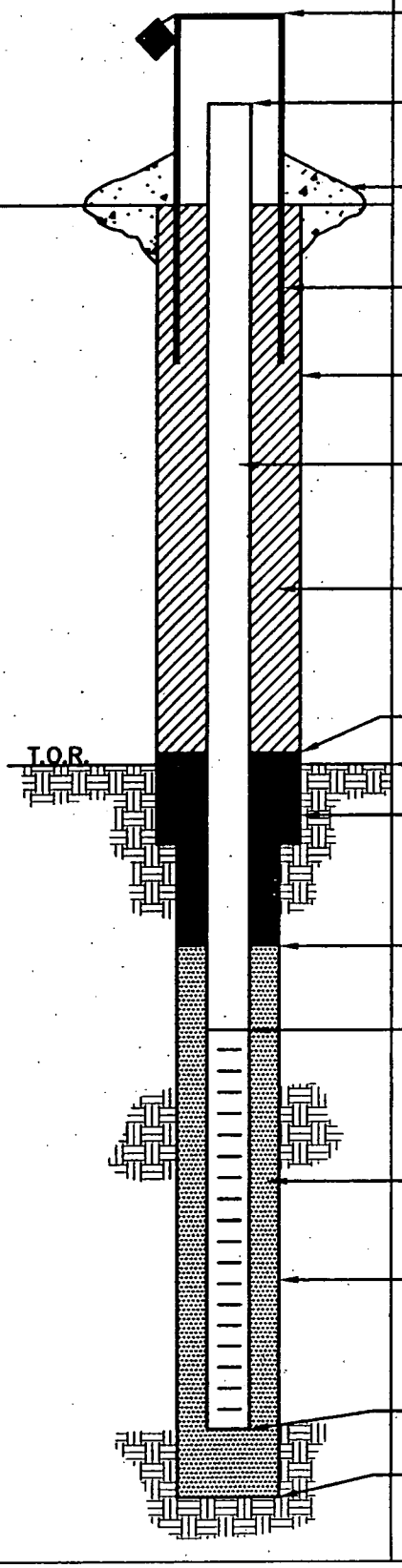

ELEVATION/HEIGHT OF TOP OF SURFACE CASING: — / —
FLUSH MOUNT
* Abandoned

ELEVATION/HEIGHT TOP OF RISER: — / —

TYPE OF SURFACE SEAL: NONE - ABANDONED

I.D. OF SURFACE CASING: NONE - ABANDONED

DIAMETER OF HOLE: 8 1/2"

RISER PIPE I.D.: 2"
TYPE OF RISER PIPE: PVC SCHEDULE 40 - REMOVED 11-27-03

TYPE OF BACKFILL: CETCO PURE GOLD MEDIUM CHIPS

ELEVATION/DEPTH TOP OF SEAL: / 3

ELEVATION/DEPTH TOP OF BEDROCK: 7'

TYPE OF SEAL: CETCO PURE GOLD MEDIUM CHIPS

ELEVATION/DEPTH TOP OF SAND: / 13

ELEVATION/DEPTH TOP OF SCREEN: / 15
TYPE OF SCREEN: PVC - REMOVED 11-27-03
SLOT SIZE x LENGTH: .020 x 10'
I.D. SCREEN: 2"

TYPE OF SAND PACK: BEST MEDIUM SAND

DIAMETER OF HOLE IN BEDROCK: 8 1/2"
CORE/REAM:

ELEVATION/DEPTH BOTTOM SCREEN: / 25
ELEVATION/DEPTH BOTTOM OF SAND: / 25
ELEVATION/DEPTH BOTTOM OF HOLE: / 28
BACKFILL MATERIAL BELOW SAND: NA

ACAD:FORM_MWINBR.dwg 07/20/99 INL

Tetra Tech NUS, Inc.

BORING LOG

PROJECT NAME: Crane NSWC
PROJECT NUMBER: 9060
DRILLING COMPANY: BOWSER MORNER
DRILLING RIG: CME 550 ATV

BORING No.: 16MWT14
DATE: 11-7-03
GEOLOGIST: M. G. COCHRAN
DRILLER: J WALSH

Sample No. and Type or RQD	Depth (Ft.) or Run No.	Blows / 6" or RQD (%)	Sample Recovery / Sample Length	Lithology Change (Depth/Ft.) or Screened Interval	Soil Density/ Consistency or Rock Hardness	Color	Material Classification	USCS*	Remarks	PID/FID Reading (ppm) Sample	Sampler BZ	Borehole**	Driller BZ**
	0												
	1					BL GR	ASPHALT GRAVEL BASE		ODORS, ASPHALT BURNING FROM BIT				
S-1		10/18	1.1/		V. DENSE	LT BRN	SAND & GRAVEL	SP	FILL, DAMP FILL TO 4'	.3	.3	1.1	.3
	3	50/3"	1.3						SS. FRAG IN BTM				
				4.0					AUGURED THRU FRAG., LOOKS				
	5								NTL BELOW				
S2		10/10	.8/		V. DENSE	LT GREY	CLAYEY SILT	SM	DAMP V. F. LAMINATED,	.3	.3	.3	.3
	7	15/50"	1.6'	7.0					HARD DRILLING POSSIBLE ROCK				
S3		50/5"	.4/	XXXX	SOFT	GR BRN	SHALE, WEATHERED		DAMP. V FINE LAM	.3	.3	.3	.3
	9		.5										
S4		32/44	1.5/		SOFT	GREY	SHALE WEATHERED		V. FINE LAM. DAMP.	.3	.3	.3	.3
	11	48/50	2.0			RD BRN	SHALE, WEATHERED		FE STAINED ON LAMS.				
	13												
S5		16/22	1.3/		SOFT	DKGR BL	SHALE,		V.F. LAM, FE STAINS ON LAMS	.3	.3	.3	.3
	15	50/5"	1.5						WEATHERED.				
S6		11/15	1.4/			DKGR BL	SHALE, WEATHERED		V.F. LAM. FE STAINS ON LAMS	.3	.3	.3	.3
	17	20/50/5	2.0	16.5 / 17		BL	COAL		LT. GREY SHALE FRAG IN BTM				
S7		24/50/5	.2/			LT GR	SHALE		BLACK, LAMS, V.F. IN SHALE	.3	.3	.3	.3
	19		1.0						DAMP				
S8		50/5"	.6/			LT GR	SHALE		WEATHERED	.3	.3	.3	.3
	21		.6										
S9		50/5"	.4/			BRN GREY	SHALE,		V.F. LAMS. FE STAINED LAMS	.3	.3	.3	.3
	23		.6						WEATHERED				
S10		50/6"	.6/			RD BRN	SHALE		FE STAINED	.3	.3	.3	.3
	25		.6				TD 25.0						

* When rock coring, enter rock brokeness.

** Include monitor reading in 6 foot intervals @ borehole. Increase reading frequency if elevated reponse read.

Drilling Area Background (ppm): .3

Remarks: 4 1/4 ID, 8 1/2 OD HSA - WELL DRY ON 11-27-03, WELL ABANDONED ON 11-27-03 BY KNOCKING BTM. OF SCREEN OUT, FILLING W/CEMENT/BENT. GROUT, PULLING PVC, CEMENT TOP.

Converted to Well: Yes ✓ No ____ Well I.D. #: 16MWT14

ABANDONED ON 11-27-03

WELL NO.: 16MWT15

Tetra Tech NUS, Inc.

BEDROCK
MONITORING WELL SHEET
WELL INSTALLED IN BEDROCK

PROJECT CRANE NSWC	LOCATION SWMU 16	DRILLER JON KEIFER
PROJECT NO. 9060	BORING 16MWT15	DRILLING METHOD ROTO SONIC
DATE BEGUN 11-7-03	DATE COMPLETED 11-9-03	
FIELD GEOLOGIST FRED W. RAMSER		DEVELOPMENT METHOD BAILER/ WATERA
GROUND ELEVATION 757.73	DATUM NAVD 88	

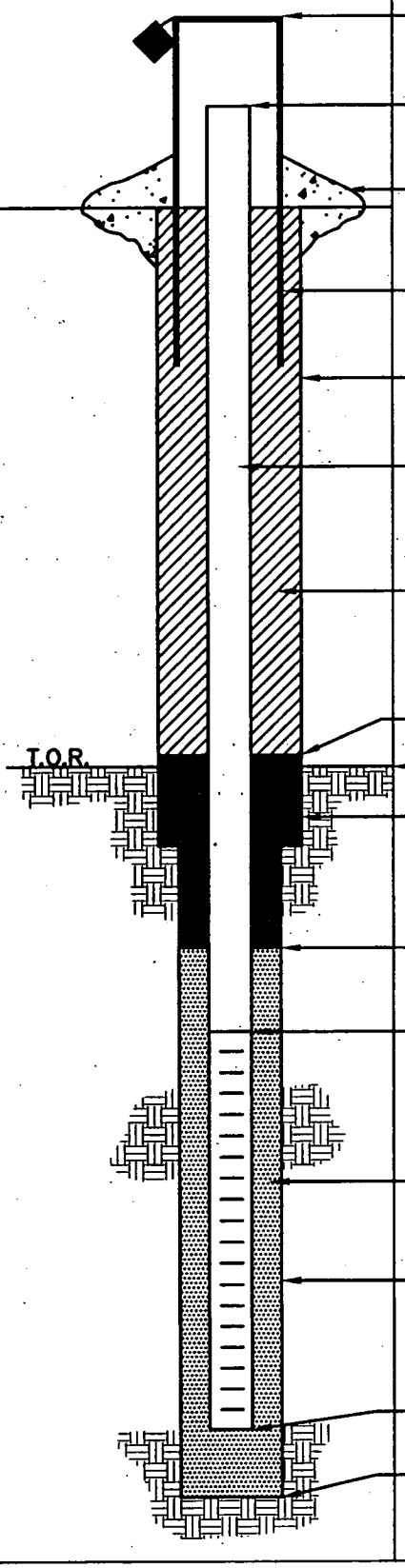

ELEVATION/HEIGHT OF TOP OF SURFACE CASING: 759.77/ 2.1

ELEVATION/HEIGHT TOP OF RISER: 759.69/ 2.0

TYPE OF SURFACE SEAL: CONCRETE 4' x 4' x 6"

I.D. OF SURFACE CASING: 4" x 4" SQ

DIAMETER OF HOLE: 11"

RISER PIPE I.D.: 2"

TYPE OF RISER PIPE: SCH. 40 PVC

TYPE OF BACKFILL: BENTONITE "PURE GOLD" CHIPS CETCO. 6" ISOLATION CASING INSTALLED USEING CEMENT/BENTONITE GROUT TO 38.5' BGS

ELEVATION/DEPTH TOP OF SEAL: 752.73/ 5'

ELEVATION/DEPTH TOP OF BEDROCK: 750.23/7.5'

TYPE OF SEAL: BENTONITE "PURE GOLD" CHIPS CETCO

ELEVATION/DEPTH TOP OF SAND: 679.73/ 78'

ELEVATION/DEPTH TOP OF SCREEN: 676.73/ 81'

TYPE OF SCREEN: PVC SCH 40

SLOT SIZE x LENGTH: 0.02 x 10'

I.D. SCREEN: 2"

TYPE OF SAND PACK: QTZ SAND 10/30 SEP / 180

DIAMETER OF HOLE IN BEDROCK: 5"

CORE/REAM: CORE

ELEVATION/DEPTH BOTTOM SCREEN: 666.73/ 91

ELEVATION/DEPTH BOTTOM OF SAND: 665.73/ 92'

ELEVATION/DEPTH BOTTOM OF HOLE: 665.73/ 92'

BACKFILL MATERIAL BELOW SAND: NONE

ACAD:FORM_MWINBR.dwg 07/20/99 INL

Tetra Tech NUS, Inc.

BORING LOG

PROJECT NAME: Crane NSWC
PROJECT NUMBER: 9060
DRILLING COMPANY: BOWSER MORNER
DRILLING RIG: VERSA SONIC

BORING No.: 16MWT15
DATE: 11-7-03
GEOLOGIST: FRED W RAMSER
DRILLER: DENNIS SINKS

Sample No. and Type or RQD	Depth (Ft.) or Run No.	Blows / 6" or RQD (%)	Sample Recovery / Sample Length	Lithology Change (Depth/Ft.) or Screened Interval	Soil Density/ Consistency or Rock Hardness	Color	Material Classification	USCS*	Remarks	PID/FID Reading (ppm) Sample	Sampler BZ	Borehole**	Driller BZ**
						LT GREY	CLAYEY F-g SAND	SM/SC					
						OLIVE GREY	TR GRAVEL						
									POSSIBLE FILL MATL.	8			
	5												
						YEL BRN	SILT + F-g SAND w/ ROCK FRAG. (SANDSTONE)		LOOKS LIKE REWORKED MATL.				
				TOP OF RK 7.5'		YEL BRN	SAND STONE WEATHERED		ON TOP OF ROCK				0
	10				SOFT	GREY BLK	SANDSTONE	V.BR	ALT.	12			
						YEL BRN	V. THIN BEDDED TO LAM. FE STAIN		GRADES TO SILTSTONE ~10'				
S-1		10%				DK GREY LT. GREY							0
	15				VERY SOFT		CLAY w/ROCK FRAGS	BR	ANGULAR GRA. OF SS + SILTSTONE				
			7.0/10		VERY SOFT		MUD STONE w OCC ROCK FRAG. OF SILTSTONE		STRONGLY WEATHERED	14			
	20				SOFT	DK GREY	CLAYEY SILTSTONE -LAMS	V.BR					0
S-2		10%			VERY SOFT	DK GREY	MUDSTONE		STRONGLY WEATHERED				
	25					DK	GREY SILTSTONE	V.BR					0

* When rock coring, enter rock brokeness.

** Include monitor reading in 6 foot intervals @ borehole. Increase reading frequency if elevated reponse read.

Drilling Area Background (ppm): —

Remarks: INSTALLED 6" CASING TO 38.5' BGS USING 8" DRILL PIPE ~11" OD.

Converted to Well: Yes ✓ No _____ Well I.D. #: 16MWT15

Tetra Tech NUS, Inc.

BORING LOG

PROJECT NAME: Crane NSWC
PROJECT NUMBER: 9060
DRILLING COMPANY: BOWSER MORNER
DRILLING RIG: VERSA SONIC

BORING No.: 16MWT15
DATE: 11-7-03
GEOLOGIST: FRED W RAMSER
DRILLER: DENNIS SINKS

Sample No. and Type or RQD	Depth (Ft.) or Run No.	Blows / 6" or RQD (%)	Sample Recovery / Sample Length	Lithology Change (Depth/Ft.) or Screened Interval	MATERIAL DESCRIPTION: Soil Density/ Consistency or Rock Hardness	Color	Material Classification	USCS*	Remarks	PID/FID Reading (ppm): Sample	Sampler BZ	Borehole**	Driller BZ**
					SOFT	DK GREY	SILTSTONE	V.BR		10			
							V. THIN BEDS TO LAM.						
	28		7/10										0
							COAL						
	30				MED	GREY	SAND STONE	BR		8			
					SOFT	LT GREY	LT. GREY IRREGULAR LAM.		BIOTURB.				0
S-3		15%					LO ∆ FRAC						
	35						CROSS LAM.			4			
							OCC. VUGS						
							PLANT FOSSILS						
			8/10										
	40												
					SOFT	DK GREY	SANDY SILTSTONE	V.BR					
							ALT DK GREY LT GREY LAM.			2			
							V. THIN BEDDING						
S-4		30%			SOFT	MED GREY	MUDSTONE	BL					0
	45												
			7/7							4			
						DK GREY	SILTSTONE	V.BR					
							LAM. TO V. THIN BEDDED						0
	50												

* When rock coring, enter rock brokeness.
** Include monitor reading in 6 foot intervals @ borehole. Increase reading frequency if elevated reponse read.

Drilling Area Background (ppm): —

Remarks: INSTALLED 6" ISO. CASING TO 38.5' BGS
USING 9" PIPE W/ 11" OUTSIDE DIA.
INSTALLED PVC 2" WELL USING 4" CORE PIPE 5" OD.

Converted to Well: Yes ✓ No _____ Well I.D. #: 16MWT15

Tetra Tech NUS, Inc.

BORING LOG

PROJECT NAME: Crane NSWC
PROJECT NUMBER: 9060
DRILLING COMPANY: BOWSER MORNER
DRILLING RIG: VERSA SONIC

BORING No.: 16MWT15
DATE: 11-9-03
GEOLOGIST: FRED W. RAMSER
DRILLER: JON KEIFER

Sample No. and Type or RQD	Depth (Ft.) or Run No.	Blows / 6" or RQD (%)	Sample Recovery / Sample Length	Lithology Change (Depth/Ft.) or Screened Interval	MATERIAL DESCRIPTION: Soil Density/ Consistency or Rock Hardness	Color	Material Classification	USCS *	Remarks	PID/FID Reading (ppm): Sample	Sampler BZ	Borehole**	Driller BZ**
1					SOFT	DK	GRADING TO A	VBr					
S-5		10%				GRY TO	CLAYEY SILTSTONE			14			
						BLK	TO 53'						
						DK GREY	SILTSTONE	V.Br					0
	55						LAM.						
			9/10										
					SOFT	DK	CLAYEY SILTSTONE	V.Br		16			
						GREY	LAM TO V.F						
	60						BEDDING						0
S-6							FISSIL						
		5%								8			
	65						MUDSTONE	Bl					0
			9/10										
					SOFT	DK	CLAYEY SILTSTONE	V.Br		8			
						GREY	LAM.						
	70						FISSIL						
S-7													
		10%								12			
													0
	75												

* When rock coring, enter rock brokeness.

** Include monitor reading in 6 foot intervals @ borehole. Increase reading frequency if elevated reponse read.

Remarks:

Drilling Area Background (ppm): –

Converted to Well: Yes ✓ No _____ Well I.D. #: 16MWT15

Tetra Tech NUS, Inc.

BORING LOG

PROJECT NAME: Crane NSWC
PROJECT NUMBER: 9060
DRILLING COMPANY: BOWSER MORNER
DRILLING RIG: VERSA SONIC

BORING No.: 16MWT 15
DATE: 11-9-03
GEOLOGIST: FRED W RAMSER
DRILLER: JON KEIFER

Sample No. and Type or RQD	Depth (Ft.) or Run No.	Blows / 6" or RQD (%)	Sample Recovery / Sample Length	Lithology Change (Depth/Ft.) or Screened Interval	MATERIAL DESCRIPTION: Soil Density/ Consistency or Rock Hardness	Color	Material Classification	USCS *	Remarks	PID/FID Reading (ppm): Sample	Sampler BZ	Borehole**	Driller BZ**
			1				CLAYEY SILTSTONE	BL					
	77		10 / 10				(MUDSTONE			21			
						DK	CLAYEY SILTSTONE	V.BR					
						GREY	LAM.						0
	80												
						GREY							
S-8		5%			MED SOFT		SANDY SILTSTONE	V.BR		4.2			
							V.F BEDDING						
							(Fg SAND)						
	85												0
						DK GREY	SILTSTONE	BR					
			10							5.6			
					MED HARD	MED GREY	SANDSTONE	BL					
S-9	90	40%					IRREGULAR LAM.						
				TD									
	95												
							SCREEN 81-91'						
							SAND 78'-92'						

* When rock coring, enter rock brokeness.

** Include monitor reading in 6 foot intervals @ borehole. Increase reading frequency if elevated reponse read.

Drilling Area Background (ppm): —

Remarks:

Converted to Well: Yes ✓ No _____ Well I.D. #: 16MWT15

TTN
1111

WELL NO.: 16MWT16

Tetra Tech NUS, Inc.

BEDROCK
MONITORING WELL SHEET
WELL INSTALLED IN BEDROCK

PROJECT: CRANE	LOCATION: CRANE IN	DRILLER: BOWSER-MORNER
PROJECT NO.: 9060	BORING: 16MWT16	DRILLING METHOD: HSA/AR
DATE BEGUN: 11-9-03	DATE COMPLETED: 11-9-03	
FIELD GEOLOGIST: M.G. COCHRAN		DEVELOPMENT METHOD: BAILER/LUMTERA
GROUND ELEVATION: 764.98	DATUM: NAVD 88	

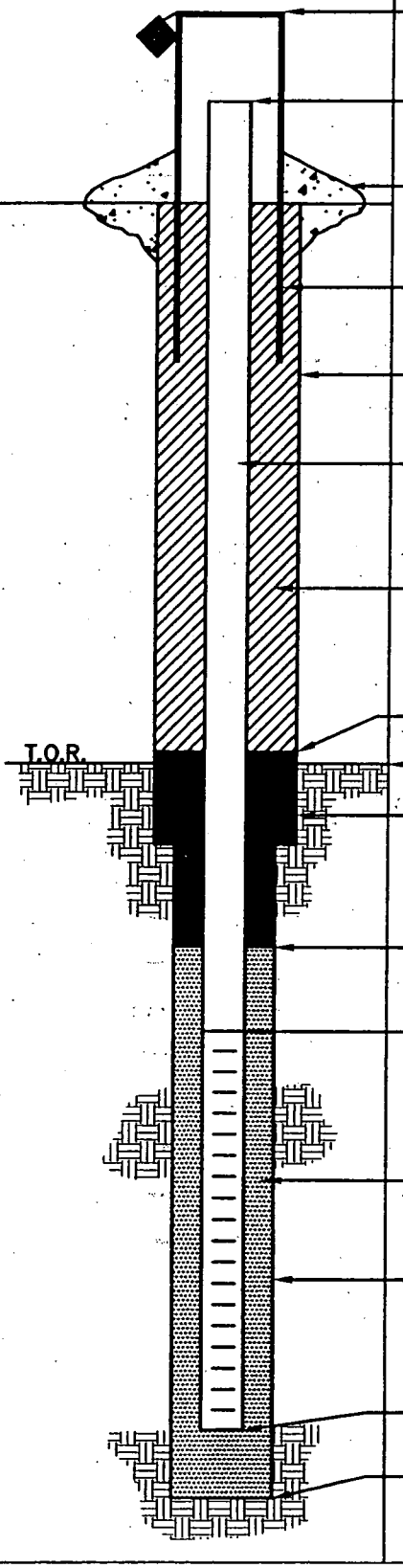

ELEVATION/HEIGHT OF TOP OF SURFACE CASING: NA / NA
FLUSH MOUNT

ELEVATION/HEIGHT TOP OF RISER: 764.74 (0.24)

TYPE OF SURFACE SEAL: CONCRETE

I.D. OF SURFACE CASING: 12" DIA WELL COVER

DIAMETER OF HOLE: 8 1/2" TO 15', 4" TO TD

RISER PIPE I.D.: 2"
TYPE OF RISER PIPE: PVC

TYPE OF BACKFILL: PURE GOLD MEDIUM BENTONITE CHIPS

ELEVATION/DEPTH TOP OF SEAL: 761.98 / 3'

ELEVATION/DEPTH TOP OF BEDROCK: 757.98 / 7'

TYPE OF SEAL: PURE GOLD MEDIUM BENTONITE CHIPS

ELEVATION/DEPTH TOP OF SAND: 741.98 / 23

ELEVATION/DEPTH TOP OF SCREEN: 738.98 / 26
TYPE OF SCREEN: PVC SLOTTED
SLOT SIZE x LENGTH: .020 X 10'
I.D. SCREEN: 2 INCHES

TYPE OF SAND PACK: GLOBAL MEDIUM SAND

DIAMETER OF HOLE IN BEDROCK: 4"
CORE/REAM:

ELEVATION/DEPTH BOTTOM SCREEN: 728.98 / 36
ELEVATION/DEPTH BOTTOM OF SAND: / 36
ELEVATION/DEPTH BOTTOM OF HOLE: 724.98 / 40
BACKFILL MATERIAL BELOW SAND: PURE GOLD BENTONITE CHIPS

ACAD:FORM_MWINBR.dwg 07/20/99 INL

Tetra Tech NUS, Inc.

BORING LOG

PROJECT NAME: Crane NSWC
PROJECT NUMBER: 9060
DRILLING COMPANY: BOWSER-MORNER
DRILLING RIG: CME 550 ATV

BORING No.: 16MWT16
DATE: 11-9-03
GEOLOGIST: M. G. COLHRAN
DRILLER: J. WALSH

Sample No. and Type or RQD	Depth (Ft.) or Run No.	Blows / 6" or RQD (%)	Sample Recovery / Sample Length	Lithology Change (Depth/Ft.) or Screened Interval	MATERIAL DESCRIPTION: Soil Density/ Consistency or Rock Hardness	Color	Material Classification	USCS *	Remarks	PID/FID Reading (ppm): Sample	Sampler BZ	Borehole**	Driller BZ**
	0						SEE LOG		PET. ODOR - ASPHALT?	-	-	0	0
							16MWT14 FOR						
							MATERIAL						
							DESCRIPTION TO						
	5						15'						
	10												
	15												
					SOFT	LT GR	SILTSTONE		DRY, BROKEN	0	0	0	0
									FE STAINED FRACS @ 18.1				
									& 25'				
C1			6.01										
5.11		51%	10.0										
10.0													
				24									
	25				M HARD	RD BRN	SANDSTONE		GRADATIONAL CHANGE				

* When rock coring, enter rock brokeness.

** Include monitor reading in 6 foot intervals @ borehole. Increase reading frequency if elevated reponse read.

Drilling Area Background (ppm): 0

Remarks: 8 1/2 OD 4 1/4 ID HSA TO 15', A.R. CORE TO T.D. (NY). HOLE DRY @ 25' AFTER 1 HOUR WAIT

Converted to Well: Yes ✓ No _____ Well I.D. #: 16MWT16

Tetra Tech NUS, Inc.

BORING LOG

PROJECT NAME: Crane NSWC
PROJECT NUMBER: 9060
DRILLING COMPANY: BOWSER-MORNER
DRILLING RIG: CME 550

BORING No.: 16MWT16
DATE: 11-9-03
GEOLOGIST: M. G. COCHRAN
DRILLER:

Sample No. and Type or RQD	Depth (Ft.) or Run No.	Blows / 6" or RQD (%)	Sample Recovery / Sample Length	Lithology Change (Depth/Ft.) or Screened Interval	MATERIAL DESCRIPTION: Soil Density/ Consistency or Rock Hardness	Color	Material Classification	USCS *	Remarks	PID/FID Reading (ppm): Sample	Sampler BZ	Borehole**	Driller BZ**
	25												
					M HARD	LT GREY	SANDSTONE		V. BROKEN, FRACTS.	0	0	0	0
									FE STAINED ON FRACS				
C2			5.6/										
10.0/		10%	10.0										
10													
									SATURATED @ 32' HIGH q				
									FRACS @ 32' RED STAINING ON				
	35			35					FRACS @ 30				
					M HARD	LT GREY	SHALY SILTSTONE		DRY, BROKEN				
C3										0	0	0	0
3.8/		38%	5.0/				SILTSTONE		NOT SHALY LIKE ABOVE				
5.0			5.0	39									
	46		39.2			DK GR	SHALE		COAL @ 39-39.2' MORE MASSIVE THAN ABOVE				
							TD 40'						

* When rock coring, enter rock brokeness.

** Include monitor reading in 6 foot intervals @ borehole. Increase reading frequency if elevated reponse read.

Drilling Area Background (ppm): 0

Remarks:

Converted to Well: Yes ✓ No _____ Well I.D. #: 16MWT16

WELL NO.: 16MWT17

Tetra Tech NUS, Inc.

BEDROCK MONITORING WELL SHEET WELL INSTALLED IN BEDROCK

PROJECT: CRANE	LOCATION: CRANE IN	DRILLER: BOWSER-MORNER
PROJECT NO.: 9060	BORING: 16MWT17	DRILLING METHOD: HSA
DATE BEGUN: 11-8-03	DATE COMPLETED: 11-8-03	
FIELD GEOLOGIST: M.G. COCHRAN		DEVELOPMENT METHOD: BAILER/SURGE
GROUND ELEVATION: 764.79	DATUM: NAVD 88	

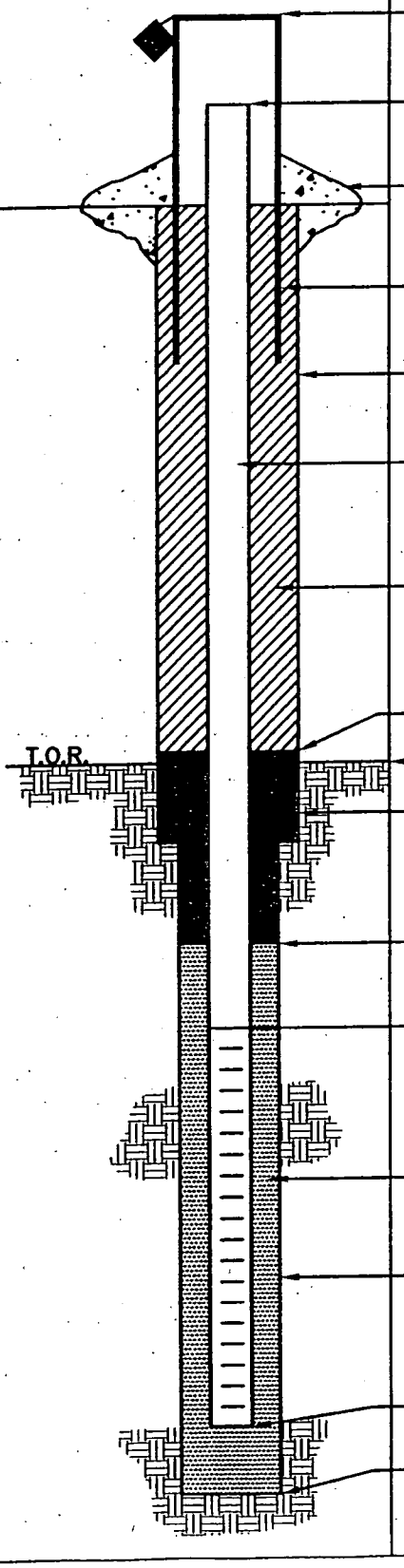

ELEVATION/HEIGHT OF TOP OF SURFACE CASING: 766.52/1.7

ELEVATION/HEIGHT TOP OF RISER: 766.53/1.7

TYPE OF SURFACE SEAL: CONCRETE

I.D. OF SURFACE CASING: 4" x 4" SQ. STEEL

DIAMETER OF HOLE: 8 1/2"

RISER PIPE I.D.: 2"

TYPE OF RISER PIPE: PVC SCHEDULE 40

TYPE OF BACKFILL: CETCO PURE GOLD MEDIUM PELLETS

ELEVATION/DEPTH TOP OF SEAL: 761.79/3

ELEVATION/DEPTH TOP OF BEDROCK: 755.79/9

TYPE OF SEAL: CETCO PURE GOLD MEDIUM PELLETS

ELEVATION/DEPTH TOP OF SAND: 752.79/12

ELEVATION/DEPTH TOP OF SCREEN: 750.79/14

TYPE OF SCREEN: PVC SLOTTED

SLOT SIZE x LENGTH: .020 X 10'

I.D. SCREEN: 2"

TYPE OF SAND PACK: GLOBAL MEDIUM SAND

DIAMETER OF HOLE IN BEDROCK: 8 1/2"

CORE/REAM:

ELEVATION/DEPTH BOTTOM SCREEN: 740.79/24

ELEVATION/DEPTH BOTTOM OF SAND: 740.79/24

ELEVATION/DEPTH BOTTOM OF HOLE: 740.79/24

BACKFILL MATERIAL BELOW SAND: —

ACAD:FORM_MWINBR.dwg 07/20/99 INL

Tetra Tech NUS, Inc.

BORING LOG

PROJECT NAME: Crane NSWC
PROJECT NUMBER: 9060
DRILLING COMPANY: BOWSER MORNER
DRILLING RIG: CME 550

BORING No.: 16MWT17
DATE: 11-8-03
GEOLOGIST: M. G. COCHRAN
DRILLER: J. WALSH

Sample No. and Type or RQD	Depth (Ft.) or Run No.	Blows / 6" or RQD (%)	Sample Recovery / Sample Length	Lithology Change (Depth/Ft.) or Screened Interval	Soil Density/ Consistency or Rock Hardness	Color	Material Classification	USCS*	Remarks	PID/FID Reading (ppm) Sample	Sampler BZ	Borehole**	Driller BZ**
	0												
S1		4/10	1.2/		MDENSE	GR	SAND + GRAVEL	SP	FILL DAMP	0	0	0	0
	2	4/4	2.0						FILL TO				
S2		3/4	1.6/		LOOSE	DK ORN	CLAYEY SILT	SM	FILL, DAMP. SS FRAG+BRICK	0	0	0	0
	4	3/5	2.0						IN SPOON. GREY MOTTLING				
S3		2/2	.4/		V LOOSE	DK BR.	SILTY CLAY	SM	GREY MOTTLING, FILL	0	0	0	0
	6	2/2	2.0										
S4		2/5	.9/		LOOSE	DK BR	SILT.		RED-BR SS FRAG IN BTM	0	0	0	0
	8	18/27	2.0	8.0									
S5		11/15	.9/	9.0	V DENSE	GR	SILT		DAMP. LOOKS NAT.	0	0	0	0
	10	50/5"	1.4										
S6		50/5"	.3/			RD BRN	SANDSTONE		FE STAINED	.6	0	.6	0
	12		.4										
S7		50/1"	.1/			RD BRN	SANDSTONE			.6	.6	.6	.0
	14		.1										
S8		50/1/2"	.1/			GR BR	SANDSTONE			1.3	1.3	1.3	1.3
	16		.2										
S9		11/15	.6/			GR	SANDSTONE		WEATHERED, SAT IN 1 MA ZONE.	3.8	1.3	1.3	1.3
	18	50/3"	1.3						BLACK STREAKS IN SPL				
S10		50/.5	.3/			RD	SANDSTONE		SHALY, FE STAINED SAT. ALONG SPOON	.9	.9	.9	.9
	20		.5										
S11		50/.3	.2/			GR	SHALE		V.F. LAMS IN WHITE DAMP	0	0	0	0
	22		.3										
S12		50/.3	.3/			GR	SHALE		V F LAMS IN WHITE	0	0	0	0
	24		.3				TD 24'						

* When rock coring, enter rock brokeness.

** Include monitor reading in 6 foot intervals @ borehole. Increase reading frequency if elevated reponse read.

Drilling Area Background (ppm): —

Remarks: PID DRIFT IN MEAS.

Converted to Well: Yes ✓ No ____ Well I.D. #: 16MWT17

WELL NO.: 16MW 118

Tetra Tech NUS, Inc.

BEDROCK
MONITORING WELL SHEET
WELL INSTALLED IN BEDROCK

PROJECT NSWC CRANE
PROJECT NO.
DATE BEGUN 1-16-04
FIELD GEOLOGIST FRED W RAMSER
GROUND ELEVATION 764.99

LOCATION SWMU 16
BORING 16MWT 18
DATE COMPLETED 1-18-04
DATUM NAVD 88

DRILLER JOE McCLOUD
DRILLING METHOD ROTO-SONIC
DEVELOPMENT METHOD BAILER/WATERA

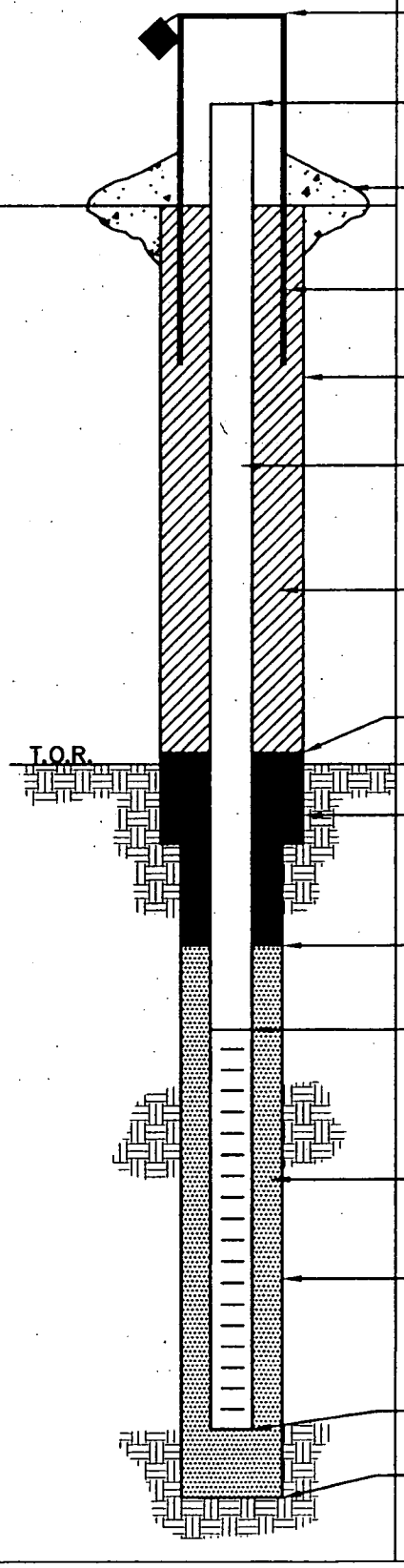

ELEVATION/HEIGHT OF TOP OF SURFACE CASING: NA / NA
FLUSH MT. COMPLETION
ELEVATION/HEIGHT TOP OF RISER: 764.44 (0.55)
TYPE OF SURFACE SEAL: CONCRETE
I.D. OF SURFACE CASING: 6"
(ISOLATION CASING TO 40' BGS)
DIAMETER OF HOLE: 11"
RISER PIPE I.D.: 2"
TYPE OF RISER PIPE: PVC SCH 40
TYPE OF BACKFILL: BENTONITE CHIPS
"PURE GOLD" GEL.
ISOLATION CASING GROUT BENT/CEMENT SLURRY
ELEVATION/DEPTH TOP OF SEAL: 762.79 / 2'
ELEVATION/DEPTH TOP OF BEDROCK: 756.79 / 8'
TYPE OF SEAL: BENTONITE CHIPS
"PURE GOLD" GEL
ELEVATION/DEPTH TOP OF SAND: 673.79 / 91
ELEVATION/DEPTH TOP OF SCREEN: 670.79 / 94
TYPE OF SCREEN: PVC SCH 40
SLOT SIZE x LENGTH: 0.020 x 10
I.D. SCREEN: 2"
TYPE OF SAND PACK: GLOBAL QTZ SAND
17E" 10/20 MED/COARSE SAND
DIAMETER OF HOLE IN BEDROCK: 5"
CORE/REAM:
ELEVATION/DEPTH BOTTOM SCREEN: 660.79 / 104
ELEVATION/DEPTH BOTTOM OF SAND: 659.79 / 105
ELEVATION/DEPTH BOTTOM OF HOLE: 659.79 / 105
BACKFILL MATERIAL BELOW SAND: NONE

ACAD:FORM_MWINBR.dwg 07/20/99 INL

Tetra Tech NUS, Inc.

BORING LOG

PROJECT NAME: Crane NSWC
PROJECT NUMBER: 9060
DRILLING COMPANY: BOWSER MORNER
DRILLING RIG: VERSA-SONIC

BORING No.: 16MWT18
DATE: 1-18-04
GEOLOGIST: FRED W RAMSEY
DRILLER: JOE McCLOUD

Sample No. and Type or RQD	Depth (Ft.) or Run No.	Blows / 6" or RQD (%)	Sample Recovery / Sample Length	Lithology Change (Depth/Ft.) or Screened Interval	Soil Density/ Consistency or Rock Hardness	Color	Material Classification	USCS *	Remarks	PID/FID Reading (ppm) Sample	Sampler BZ	Borehole**	Driller BZ**
						GREY	~1.0' GROUT		SEE WELL LOG				
					MED HARD	MED GREY	SILTY SANDSTONE	BR	16MWT16	1.2			
									FOR LITHOLOGIC DETAILS 0'-40'			0	
								V.BR					
S-1	45	5%			MED SOFT	DK GREY	MUD STONE			8			
							POORLY RECORD					0	
					SOFT					1.5			
	50		10/10									0	
					MED SOFT		DK GREY SHALE	V.BR	V.F. LAMINATION				
							POOR REC.			1.5		0	
							* DIFFICULTIES						
							EXTRACTING			2.0		0	
S-2	55	5%					CORE MUCH						
							OF CORE WENT						
							INTO MUD						
							PAN LOOKED						0
							GREY/DK SHALE						
	60		3/10										
							AS ABOVE	V.BR					
							60-65						
							MUDSTONE			52*			0
							POORLY LAMS						
S-3	65	0%											

* When rock coring, enter rock brokeness.

** Include monitor reading in 6 foot intervals @ borehole. Increase reading frequency if elevated reponse read.

Drilling Area Background (ppm): 0.0

Remarks: * HIGH PID MAYBE DUE TO HIGH MOISTURE CONTENT, AND HEATED CORE CASING STEAM. NO ODDERS NOTICED
SONIC DRILLING BEYOND CASING 4 1/2 DRILL PIPE = 5" HOLE

Converted to Well: Yes ✓ No _____ Well I.D. #: 16MWT18

Tetra Tech NUS, Inc.

BORING LOG

PROJECT NAME: Crane NSWC
PROJECT NUMBER: 9060
DRILLING COMPANY: BOWSER/MORNER
DRILLING RIG: VERSA-SONIC

BORING No.: 16MWT18
DATE: 1-18-04
GEOLOGIST: FRED WRAMSER
DRILLER: JOE McCLOUD

Sample No. and Type or RQD	Depth (Ft.) or Run No.	Blows / 6" or RQD (%)	Sample Recovery / Sample Length	Lithology Change (Depth/Ft.) or Screened Interval	Soil Density/ Consistency or Rock Hardness	Color	Material Classification	USCS*	Remarks	PID/FID Reading (ppm) Sample	Sampler BZ	Borehole**	Driller BZ**
	65				MED SOFT	DK GREY	SHALE	V.BR					
							(SILT STONE)			12			
													0
	70		10/10										
					MED HARD	LT GREY	SILTY SAND STONE	BR					
							- POORLY LAMINATED			12			
							- V.F. BEDDED						0
S-4	75	100			MED SOFT	MED GREY	MUD STONE	V.BR		14			
						TO DK GREY	MORE SILT THAN CLAY						
					SOFT	BLK	SHALE (CLAY STONE)	V.BR					0
							V.F. LAMINATIONS			20			
	80		10/10										
						BLK	SHALE	V.BR					
										21			0
					SOFT	DK GREY	MUDSTONE	BR					
S-5		60											
										14			
			5.0/8										0
	90				MED SOFT	DK GREY	SANDY SILTSTONE THIN LAMINATE	V.BR					

* When rock coring, enter rock brokeness.

** Include monitor reading in 6 foot intervals @ borehole. Increase reading frequency if elevated reponse read.

Drilling Area Background (ppm): ~

Remarks: PHOTO LOG: #544 40' - 70'
545 70 - 105

Converted to Well: Yes ✓ No _____ Well I.D. #: 16MWT18

Tetra Tech NUS, Inc.

BORING LOG

PROJECT NAME: Crane NSWC
PROJECT NUMBER: 9060
DRILLING COMPANY: BOWSER/MORNER
DRILLING RIG: VERSA-SONIC

BORING No.: 16MWT18
DATE: 1-18-01
GEOLOGIST: FRED WRAMSER
DRILLER: JOE McCLOUD

Sample No. and Type or RQD	Depth (Ft.) or Run No.	Blows / 6" or RQD (%)	Sample Recovery / Sample Length	Lithology Change (Depth/Ft.) or Screened Interval	Soil Density/ Consistency or Rock Hardness	Color	Material Classification	USCS*	Remarks	PID/FID Reading (ppm) Sample	Sampler BZ	Borehole**	Driller BZ**
	90												
					MED SOFT	MED GREY	SANDY SILTSTONE	V.Bf		12			
							LAMINATIONS					0	0
		0%											
S6	95						SANDY SILTSTONE			20			
							GRADES TO SILTY						
							SANDSTONE VUGS						
			10/10				IRR LAM			22		0	0
					MED HARD								
	100												
					SOFT	BLK	COAL SEAM					0	0
S7										4			
		0%				WHT LT GREY	CLAYEY SILTSTONE						
	101					GREY	TR c-g SAND					0	0
	105		10/10				SANDSTONE						
							SCREEN 94-104						
							SAND 91 — 105						
							BENTONITE 2'-91'						

* When rock coring, enter rock brokeness.

** Include monitor reading in 6 foot intervals @ borehole. Increase reading frequency if elevated reponse read.

Drilling Area Background (ppm): –

Remarks:

Converted to Well: Yes ✓ No _____ Well I.D. #: 16MWT18

Tetra Tech NUS, Inc.

BORING LOG

PROJECT NAME: Crane NSWC
PROJECT NUMBER: 9060
DRILLING COMPANY: NA
DRILLING RIG: HAND AUGER

BORING No.: 16SB47
DATE: 12/5/03
GEOLOGIST: S. CRIER
DRILLER: NA

Sample No. and Type or RQD	Depth (Ft.) or Run No.	Blows / 6" or RQD (%)	Sample Recovery / Sample Length	Lithology Change (Depth/Ft.) or Screened Interval	MATERIAL DESCRIPTION: Soil Density/ Consistency or Rock Hardness	Color	Material Classification	USCS *	Remarks	PID/FID Reading (ppm): Sample	Sampler BZ	Borehole**	Driller BZ**
	0					GR	GRAVEL + SANDY LOAM		Road Fill (Modified)				
						H.Br/G	SILTY CLAY W/ SOME GRAVEL + ORGANIC MTRL		Standing water in hole				
X	5												

* When rock coring, enter rock brokeness.

** Include monitor reading in 6 foot intervals @ borehole. Increase reading frequency if elevated reponse read.

Remarks:

Drilling Area Background (ppm):

Converted to Well: Yes ____ No ✓ Well I.D. #: ____

Tetra Tech NUS, Inc.

BORING LOG

PROJECT NAME: Crane NSWC
PROJECT NUMBER: 9060
DRILLING COMPANY: NA
DRILLING RIG: HAND AUGER

BORING No.: 16SB48
DATE: ~~SWMU 16~~ 12/5/03
GEOLOGIST: S. GRIER
DRILLER: NA

Sample No. and Type or RQD	Depth (Ft.) or Run No.	Blows / 6" or RQD (%)	Sample Recovery / Sample Length	Lithology Change (Depth/Ft.) or Screened Interval	MATERIAL DESCRIPTION: Soil Density/ Consistency or Rock Hardness	Color	Material Classification	USCS*	Remarks	PID/FID Reading (ppm): Sample	Sampler BZ	Borehole**	Driller BZ**
	0	0											
						Gr	SANDY LOAM + GRAVEL						
							SILTY CLAY W/ SOME GRAVEL + ORGANIC MATL		WATER STANDING IN HOLE				
	3												

* When rock coring, enter rock brokeness.
** Include monitor reading in 6 foot intervals @ borehole. Increase reading frequency if elevated reponse read.

Drilling Area Background (ppm):

Remarks:

Converted to Well: Yes ____ No ✓ Well I.D. #: ____

Tetra Tech NUS, Inc.

BORING LOG

PROJECT NAME: Crane NSWC
PROJECT NUMBER: 9060
DRILLING COMPANY: NA
DRILLING RIG: HAND AUGER

BORING No.: 16 SB 49
DATE: 12/5/03
GEOLOGIST: S. GRIER
DRILLER: NA

Sample No. and Type or RQD	Depth (Ft.) or Run No.	Blows / 6" or RQD (%)	Sample Recovery / Sample Length	Lithology Change (Depth/Ft.) or Screened Interval	MATERIAL DESCRIPTION: Soil Density/ Consistency or Rock Hardness	Color	Material Classification	USCS *	Remarks	PID/FID Reading (ppm): Sample	Sampler BZ	Borehole**	Driller BZ**
	0					GR	GRAVEL + SANDY LOAM		SLIGHTLY MOIST				
						Lt Br.	SILTY CLAY W/ GRAVEL + ORGANICS		WET + COHESIVE				
	5					Lt Br.							

* When rock coring, enter rock brokeness.

** Include monitor reading in 6 foot intervals @ borehole. Increase reading frequency if elevated reponse read.

Drilling Area Background (ppm): ____

Remarks: ____

Converted to Well: Yes ____ No ____ Well I.D. #: ____

Tetra Tech NUS, Inc.

BORING LOG

PROJECT NAME: Crane NSWC
PROJECT NUMBER: 9060
DRILLING COMPANY: NA
DRILLING RIG: HAND AUGER

BORING No.: 16 SB 50
DATE: 12/5/02
GEOLOGIST: S. GRIER
DRILLER: NA

Sample No. and Type or RQD	Depth (Ft.) or Run No.	Blows / 6" or RQD (%)	Sample Recovery / Sample Length	Lithology Change (Depth/Ft.) or Screened Interval	MATERIAL DESCRIPTION: Soil Density/ Consistency or Rock Hardness	Color	Material Classification	USCS *	Remarks	PID/FID Reading (ppm): Sample	Sampler BZ	Borehole**	Driller BZ**
	0					Gr	GRAVEL + SANDY LOAM						
						Lt Br	SILTY CLAY W/ GRAVEL + ORGANIC MATRL		MOIST + COHESIVE				
	3												

* When rock coring, enter rock brokeness.

** Include monitor reading in 6 foot intervals @ borehole. Increase reading frequency if elevated reponse read.

Drilling Area Background (ppm):

Remarks:

Converted to Well: Yes ____ No ✓ Well I.D. #: ____

APPENDIX B.2
SWMU 13 AND SWMU 16 DIGGING PERMITS
ROUND 1 AND ROUND 2

DIGGING PERMIT
NSWC CRANE 11000/3 (REV. 8/02)

4062

REQUESTED BY: Tetra Tech NUS, Inc / Terry Rojahn 412-921-8857	DATE: 2/21/03
WORK REQUEST ON E/S NO.: 68286	Mine Fill-B - SUMM 13
WORK WILL BE PERFORMED BY: Tetra Tech NUS, Inc	DATE (Start - on or about): 2/28/03

WORK DESCRIPTION:
Drilling soil samples for surface & subsurface samples. Install ground water monitoring wells. All locations marked with wooden stakes & pink flagging. See attached drawing.

EQUIPMENT TYPE
☐ HAND TOOLS ☐ CORE DRILL ☐ TRENCHER ☐ BACKHOE ☐ HEAVY EQUIPMENT

Faxed 22 2/21/03

UNDERGROUND UTILITIES LOCATED IN WORK SITE

UTILITY	PRESENT	MARKED	NOT LOCATED	REMARKS
COMPRESSED AIR 22	N/A			PN 2-26-03
HIGH VOLTAGE ELECTRICAL	YES	red FLAGS		2-24-03 PT HT
FIRE ALARM 22	N.A.			3/6/03 WDM
GROUNDING 22	Present	call it Cut		SH 2-28-03
NATURAL GAS Exp 4/13 0393055	✓	✓		3 25 03 MWM
SECURITY ALARM 22 J. Haseman	N/A			3/3/03
SEWER	YES	MARKED		AM 3-24-03
STEAM	N.A			BKW 2-25-03
TELEPHONE Faxed 2/21/03	N/A			3-3-03
WATER	yes	MARKED		AM 3-24-03
SECOND ELECTRICAL 22	N/A			SH 2-28-03
Faxed 2/21/03 GENERAL DYNAMICS/NMCI	Yes Marked	Yes Marked		M.S. 3/7 03

In addition to the general precautions for excavating where underground utilites are present, comply with the following:

PERMIT HOLDER SIGNATURE: Terry Rojahn	DATE: 3/25/03
DIGGING PERMIT APPROVED BY: Norma L. Zellman	DATE: 3/25/03

DISTRIBUTION:

ORIGINAL - Code 09Z5 File
YELLOW - Supv. At work site
PINK - Permit requestor

DIGGING PERMIT
NSWC CRANE 11000/3 (REV. 8/02)

4061

REQUESTED BY: Tetra Tech NVS, Inc. / Terry Rojahn 412-921-8857	DATE: 3/25/03
WORK REQUEST ON E/S NO.: 68285	SWMU 16-East High Expl. Fill / B-
WORK WILL BE PERFORMED BY: Tetra Tech NVS, Inc.	DATE (Start - on or about): 3/20/03

WORK DESCRIPTION:
Drilling for soil samples for surface & subsurface samples. Install ground water monitoring wells. Soil borings 16SB01-07 marked with white paint & mason nail with pink ribbon. All other locations marked.

EQUIPMENT TYPE
☐ HAND TOOLS ☐ CORE DRILL ☐ TRENCHER ☐ BACKHOE ☐ HEAVY EQUIPMENT

Faxed z2 3/5/03 **UNDERGROUND UTILITIES LOCATED IN WORK SITE**

UTILITY	PRESENT	MARKED	NOT LOCATED	REMARKS
COMPRESSED AIR z2	N/A			PN 3-6-03
HIGH VOLTAGE ELECTRICAL	YES	YES		S.P. 3-18-03
FIRE ALARM z2	N/A			3/10/03 BZ
GROUNDING z2	YES	YES		3/6/03 WDM
* NATURAL GAS Exp 3/25 03606.43	YES	YES		3-6-03 W.H
SECURITY ALARM z2 J. Hasemann	N/A			3/10/03
SEWER	YES	MARKED		3-24-03 JCA
STEAM	NA			BKW 3-7-03
TELEPHONE Faxed 3/5/03	NA			DL 3-18-03
WATER	YES	MARKED		3-24-03 JCA
SECOND ELECTRICAL z2	N/A			3/10/03 BZ
GENERAL DYNAMICS/NMCI	N/A			2/21/03 dg

In addition to the general precautions for excavating where underground utilites are present, comply with the following:

* Exp 4/13 0393002

PERMIT HOLDER SIGNATURE: Terry Rojahn	DATE: 3-24-03
DIGGING PERMIT APPROVED BY: Donna S. Zellman	DATE: 3/24/03

DISTRIBUTION:
ORIGINAL - Code 09Z5 File
YELLOW - Supv. At work site
PINK - Permit requestor

DIGGING PERMIT
NSWC CRANE 11000/3 (REV. 8/02)

4341

REQUESTED BY: Tetra Tech NUS, Inc. / Ralph Basinski

DATE: 10/15/03

WORK REQUEST ON E/S NO.: 107995

Bldg 146 Area – SWMU 16

WORK WILL BE PERFORMED BY: Tetra Tech (Terry Rojahn 412-337-0460)

DATE (Start - on or about): 10/21/03

WORK DESCRIPTION: Soil borings to obtain surface & subsurface samples & installation of ground water monitoring wells. See attached drawing. Area is marked with white flags.

EQUIPMENT TYPE

☐ HAND TOOLS ☐ CORE DRILL ☐ TRENCHER ☐ BACKHOE ☐ HEAVY EQUIPMENT

Faxed ZZ 10/15/03

UNDERGROUND UTILITIES LOCATED IN WORK SITE

UTILITY	PRESENT	MARKED	NOT LOCATED	REMARKS
COMPRESSED AIR ZZ	N/A			per J. Beasley 10/16/03 dg
HIGH VOLTAGE ELECTRICAL	YES	YES		11-6-03 H. Taylor
FIRE ALARM ZZ	YES	YES		10/21/03 WDH
GROUNDING ZZ	N/A			10/22/03 BK
NATURAL GAS	N/A			dg 10/15/03
SECURITY ALARM ZZ J. Hassman	N/A			10/20/03
SEWER	Yes	Yes		10-17-03
STEAM	NA according to DRWG			10-17-03
TELEPHONE Faxed 10/15/03	N/A			RBP 10-20-03
WATER	Yes	Yes		10-17-03
SECOND ELECTRICAL ZZ	Yes	Yes		11-6-03 BK
GENERAL DYNAMICS/NMCI	N/A			dg 10/15/03

In addition to the general precautions for excavating where underground utilites are present, comply with the following:

Include an area of 10' around each sample location if possible.

PERMIT HOLDER SIGNATURE: Ty Tyler — DATE: 11/6/03

DIGGING PERMIT APPROVED BY: Donna L. Zollner — DATE: 11/6/03

DISTRIBUTION:

ORIGINAL - Code 09Z5 File
YELLOW - Supv. At work site
PINK - Permit requestor

DIGGING PERMIT
NSWC CRANE 11000/3 (REV. 8/02)

4341

REQUESTED BY: Tetra Tech NUS, Inc. / Ralph Basinski
DATE: 10/15/03

WORK REQUEST ON E/S NO.: 107995
Bldg 146 Area – SWMU

WORK WILL BE PERFORMED BY: Tetra Tech (Terry Rajan 412-337-0460)
DATE (Start - on or about): 10/21/03

WORK DESCRIPTION: Soil borings to obtain surface & subsurface samples & installation of ground water monitoring wells. See attached drawing. Area is marked with white flags.

EQUIPMENT TYPE
☐ HAND TOOLS ☐ CORE DRILL ☐ TRENCHER ☐ BACKHOE ☐ HEAVY EQUIPMENT

Faxed 22 10/15/03 UNDERGROUND UTILITIES LOCATED IN WORK SITE Remarked

UTILITY	PRESENT	MARKED	~~NOT LOCATED~~	REMARKS
COMPRESSED AIR 22	N/A			per J. Beasley 10/16/03 dg
HIGH VOLTAGE ELECTRICAL	YES	YES	25 Marked 1-13	11-6-03 H. Taylor
* FIRE ALARM 22	YES	YES	*WDM Jan 13, 04	10/21/03 WDM
GROUNDING 22	N/A			10/22/03 BK
NATURAL GAS	N/A			dg 10/15/03
SECURITY ALARM 22 J. Hassman	N/A		JRH Jan 13, 04	10/20/03 JRH
* SEWER	Yes	Yes	25 N/A 1/13 WHW	10-17-03
STEAM	N/A According to Drwg.		25 NA CMG 1-13-04	10-17-03
TELEPHONE Faxed 10/15/03	N/A			RBP 10-20-03
* WATER	Yes	Yes	25 Yes Marked 1/13 WHW	10-17-03
* SECOND ELECTRICAL 22	Yes	Yes	25 marked 1/13/04	11-6-03 BK
GENERAL DYNAMICS/NMCI	N/A			dg 10/15/03

In addition to the general precautions for excavating where underground utilites are present, comply with the following:

Include an area of 10' around each sample location if possible.

PERMIT HOLDER SIGNATURE: Terry Rajan
DATE: 11/6/03

DIGGING PERMIT APPROVED BY: Donna L. Zoldner
DATE: ~~11/6/03~~ 1/13/04

DISTRIBUTION:
ORIGINAL - Code 09Z5 File
YELLOW - Supv. At work site
PINK - Permit requestor

DIGGING PERMIT
NSWC CRANE 11000/3 (REV. 8/02)

4344

REQUESTED BY: Tetra Tech NVS, Inc./Ralph Basinski 412-921-8308
DATE: 10/17/03

WORK REQUEST ON E/S NO.: 108250
Wooded Area Behind Mine Fill B

WORK WILL BE PERFORMED BY: Tetra Tech NVS, Inc.
DATE (Start - on or about): 10/21/03

WORK DESCRIPTION: SWMU 13
Soil borings to obtain surface & subsurface samples, & installation of ground water monitoring wells. Area is behind (Northwest) of Minefill B & locations (9) are outside fence in wooded area marked with laths & pink ribbon

EQUIPMENT TYPE

☐ HAND TOOLS ☐ CORE DRILL ☐ TRENCHER ☐ BACKHOE ☐ HEAVY EQUIPMENT

UNDERGROUND UTILITIES LOCATED IN WORK SITE

UTILITY	PRESENT	MARKED	NOT LOCATED	REMARKS
COMPRESSED AIR	N/A			10/17/03 dy
HIGH VOLTAGE ELECTRICAL	N/A	OVERHEAD		10/17/03 RAB
FIRE ALARM	N/A			10/17/03 SL
GROUNDING	N/A			10/17/03 SL
NATURAL GAS	N/A			10/17/03 dy
SECURITY ALARM 225 (Herman)	N/A			10/30/03 PRH
SEWER	yes	yes		10-20-03 M. Wagoner
STEAM	N/A			10/17/03 SL
TELEPHONE Faxed 10/17/03	N/A			Phone 10/20/03 Ron P. Eggers
WATER	yes	yes		10-20-03 M. Wagoner
SECOND ELECTRICAL	N/A			10/17/03 RAB
GENERAL DYNAMICS/NMCI	N/A			10/17/03 dy

In addition to the general precautions for excavating where underground utilites are present, comply with the following:

PERMIT HOLDER SIGNATURE: Tony Rosh
DATE: 10/20/03

DIGGING PERMIT APPROVED BY: Norman L. Zollman
DATE: 10/20/03

DISTRIBUTION:

ORIGINAL - Code 09Z5 File
YELLOW - Supv. At work site
PINK - Permit requestor

DIGGING PERMIT
NSWC CRANE 11000/3 (REV. 8/02)

4345

REQUESTED BY: Tetra Tech NUS, Inc/Ralph Basinski 412-921-8308	DATE: 10/17/03
WORK REQUEST ON E/S NO.: 108277	Mine Fill B
WORK WILL BE PERFORMED BY: Tetra Tech NUS, Inc. (Terry Rojahn 412-337-0460	DATE (Start - on or about): 10/27/03

WORK DESCRIPTION
Soil borings to obtain surface & subsurface samples, & installation of ground water monitoring wells. Several locations are inside fence, 1 location outside fence on west side, & 6 outside fence in front across Hwy 45. Marked with laths & pink ribbon

EQUIPMENT TYPE
☐ HAND TOOLS ☐ CORE DRILL ☐ TRENCHER ☐ BACKHOE ☐ HEAVY EQUIPMENT

Faxed 22 10/17/03

UNDERGROUND UTILITIES LOCATED IN WORK SITE

UTILITY	PRESENT	MARKED	NOT LOCATED	REMARKS
COMPRESSED AIR 22	N/A			MRM 10-27-03
HIGH VOLTAGE ELECTRICAL	N/A			S.P. 10/22/03
FIRE ALARM 22	N/A			10/22/03 WDM
GROUNDING 22	N/A			10/22/03 BA
NATURAL GAS Exp 11/1/03 03/10/17 2020	✓	✓		102103 JCF
SECURITY ALARM 22 J. Haseman	N/A			10/20/03 JRH
SEWER	Yes	Yes		10-27-03 MW
STEAM	Above Ground		*	10-22-03
TELEPHONE Faxed 10/17/03	N/A			10-24-03 RBP
WATER	Yes	Yes		10-27-03 MW
SECOND ELECTRICAL 22	N/A			10/22/03 BA
GENERAL DYNAMICS/NMCI Faxed 10/17/03	YES	YES		10-20-03

In addition to the general precautions for excavating where underground utilites are present, comply with the following:

PERMIT HOLDER SIGNATURE: [signature]	DATE: 10-27-03
DIGGING PERMIT APPROVED BY: [signature]	DATE: 10-27-03

DISTRIBUTION:

ORIGINAL - Code 09Z5 File
YELLOW - Supv. At work site
PINK - Permit requestor

APPENDIX B.3.1
SWMU 13 MONITORING WELL MATERIALS
CERTIFICATES OF CONFORMANCE
ROUND 1

MONITORING WELL MATERIALS

CERTIFICATE OF CONFORMANCE

Well Designation: 13MWT01
Site Name: SWMU 13 MINE FILL B
Date Installed: 3/30/2003
Project Name: NSWC CRANE

Site Geologist: BOB BALKOVEC
Drilling Company: BOWSER MORNER
Driller: DAVE S.
Project Number: N9060 CTO 0279

MATERIAL	BRAND/DESCRIPTION	SOURCE/SUPPLIER	SAMPLE COLLECTED?
Well Casing	2" PVC / Schedule 40	Boart Longyear ASTM F480-88A	NO
Well Screen	2" PVC / 20 Slot / Schedule 40	Boart Longyear ASTM F480-88A	
End Cap	2" PVC / Schedule 40	Boart Longyear ASTM F480-88A	
Drilling Fluid	NA	NA	
Drilling Fluid Additives	NA	NA	
Backfill Material	Portland Cement	Home Depot	
Annular Filter Pack	#5 Global Sand	Global	
Bentonite Seal	Pure Gold Medium Chips	Global	
Annular Grout	Quik Grout Bentonite Powder	Global	
Surface Cement	Portland Cement	Home Depot	
Protective Casing	4" Steel	Global	
Paint	Safety Yellow. Rustoleum	Home Depot	
Rod Lubricant	NA	NA	
Compressor Oil	NA	NA	

To the best of my knowledge, I certify that the above described materials were used during the installation of this monitoring well.

Signature of Site Geologist: Robert Balkovec

MONITORING WELL MATERIALS

CERTIFICATE OF CONFORMANCE

Well Designation:	13MWT02	Site Geologist:	BOB BALKOVEC
Site Name:	SWMU 13 MINE FILL B	Drilling Company:	BOWSER MORNER
Date Installed:	3/29/2003	Driller:	DAVE S.
Project Name:	NSWC CRANE	Project Number:	N9060 CTO 0279

MATERIAL	BRAND/DESCRIPTION	SOURCE/SUPPLIER	SAMPLE COLLECTED?
Well Casing	2" PVC / Schedule 40	Boart Longyear ASTM F480-88A	NO
Well Screen	2" PVC / 20 Slot / Schedule 40	Boart Longyear ASTM F480-88A	
End Cap	2" PVC / Schedule 40	Boart Longyear ASTM F480-88A	
Drilling Fluid	NA	NA	
Drilling Fluid Additives	NA	NA	
Backfill Material	Portland Cement	Home Depot	
Annular Filter Pack	#5 Global Sand	Global	
Bentonite Seal	Pure Gold Medium Chips	Global	
Annular Grout	Quik Grout Bentonite Powder	Global	
Surface Cement	Portland Cement	Home Depot	
Protective Casing	4" Steel	Global	
Paint	Safety Yellow. Rustoleum	Home Depot	
Rod Lubricant	NA	NA	
Compressor Oil	NA	NA	

To the best of my knowledge, I certify that the above described materials were used during the installation of this monitoring well.

Signature of Site Geologist: Robert Balkovec

MONITORING WELL MATERIALS

CERTIFICATE OF CONFORMANCE

Well Designation: 13MWT03
Site Name: SWMU 13 MINE FILL B
Date Installed: 3/30/2003
Project Name: NSWC CRANE

Site Geologist: BOB BALKOVEC
Drilling Company: BOWSER MORNER
Driller: DAVE S.
Project Number: N9060 CTO 0279

MATERIAL	BRAND/DESCRIPTION	SOURCE/SUPPLIER	SAMPLE COLLECTED?
Well Casing	2" PVC / Schedule 40	Boart Longyear ASTM F480-88A	NO
Well Screen	2" PVC / 20 Slot / Schedule 40	Boart Longyear ASTM F480-88A	
End Cap	2" PVC / Schedule 40	Boart Longyear ASTM F480-88A	
Drilling Fluid	NA	NA	
Drilling Fluid Additives	NA	NA	
Backfill Material	Portland Cement	Home Depot	
Annular Filter Pack	#5 Global Sand	Global	
Bentonite Seal	Pure Gold Medium Chips	Global	
Annular Grout	Quik Grout Bentonite Powder	Global	
Surface Cement	Portland Cement	Home Depot	
Protective Casing	4" Steel	Global	
Paint	Safety Yellow. Rustoleum	Home Depot	
Rod Lubricant	NA	NA	
Compressor Oil	NA	NA	

To the best of my knowledge, I certify that the above described materials were used during the installation of this monitoring well.

Signature of Site Geologist: Robert Balkovec

MONITORING WELL MATERIALS

CERTIFICATE OF CONFORMANCE

Well Designation:	13MWT04	Site Geologist:	BOB BALKOVEC
Site Name:	SWMU 13 MINE FILL B	Drilling Company:	BOWSER MORNER
Date Installed:	3/30/2003	Driller:	DAVE S.
Project Name:	NSWC CRANE	Project Number:	N9060 CTO 0279

MATERIAL	BRAND/DESCRIPTION	SOURCE/SUPPLIER	SAMPLE COLLECTED?
Well Casing	2" PVC / Schedule 40	Boart Longyear ASTM F480-88A	NO
Well Screen	2" PVC / 20 Slot / Schedule 40	Boart Longyear ASTM F480-88A	
End Cap	2" PVC / Schedule 40	Boart Longyear ASTM F480-88A	
Drilling Fluid	NA	NA	
Drilling Fluid Additives	NA	NA	
Backfill Material	Portland Cement	Home Depot	
Annular Filter Pack	#5 Global Sand	Global	
Bentonite Seal	Pure Gold Medium Chips	Global	
Annular Grout	Quik Grout Bentonite Powder	Global	
Surface Cement	Portland Cement	Home Depot	
Protective Casing	4" Steel	Global	
Paint	Safety Yellow. Rustoleum	Home Depot	
Rod Lubricant	NA	NA	
Compressor Oil	NA	NA	

To the best of my knowledge, I certify that the above described materials were used during the installation of this monitoring well.

Signature of Site Geologist: Robert Balkovec

MONITORING WELL MATERIALS

CERTIFICATE OF CONFORMANCE

Well Designation: 13MWT05
Site Name: SWMU 13 MINE FILL B
Date Installed: 3/29/2003
Project Name: NSWC CRANE

Site Geologist: BOB BALKOVEC
Drilling Company: BOWSER MORNER
Driller: DAVE S.
Project Number: N9060 CTO 0279

MATERIAL	BRAND/DESCRIPTION	SOURCE/SUPPLIER	SAMPLE COLLECTED?
Well Casing	2" PVC / Schedule 40	Boart Longyear ASTM F480-88A	NO
Well Screen	2" PVC / 20 Slot / Schedule 40	Boart Longyear ASTM F480-88A	
End Cap	2" PVC / Schedule 40	Boart Longyear ASTM F480-88A	
Drilling Fluid	NA	NA	
Drilling Fluid Additives	NA	NA	
Backfill Material	Portland Cement	Home Depot	
Annular Filter Pack	#5 Global Sand	Global	
Bentonite Seal	Pure Gold Medium Chips	Global	
Annular Grout	Quik Grout Bentonite Powder	Global	
Surface Cement	Portland Cement	Home Depot	
Protective Casing	4" Steel	Global	
Paint	Safety Yellow. Rustoleum	Home Depot	
Rod Lubricant	NA	NA	
Compressor Oil	NA	NA	

To the best of my knowledge, I certify that the above described materials were used during the installation of this monitoring well.

Signature of Site Geologist: Robert Balkovec

MONITORING WELL MATERIALS

CERTIFICATE OF CONFORMANCE

Well Designation:	13MWT06	Site Geologist:	BOB BALKOVEC
Site Name:	SWMU 13 MINE FILL B	Drilling Company:	BOWSER MORNER
Date Installed:	4/7/2003	Driller:	DAVE S.
Project Name:	NSWC CRANE	Project Number:	N9060 CTO 0279

MATERIAL	BRAND/DESCRIPTION	SOURCE/SUPPLIER	SAMPLE COLLECTED?
Well Casing	2" PVC / Schedule 40	Boart Longyear ASTM F480-88A	NO
Well Screen	2" PVC / 20 Slot / Schedule 40	Boart Longyear ASTM F480-88A	
End Cap	2" PVC / Schedule 40	Boart Longyear ASTM F480-88A	
Drilling Fluid	NA	NA	
Drilling Fluid Additives	NA	NA	
Backfill Material	Portland Cement	Home Depot	
Annular Filter Pack	#5 Global Sand	Global	
Bentonite Seal	Pure Gold Medium Chips	Global	
Annular Grout	Quik Grout Bentonite Powder	Global	
Surface Cement	Portland Cement	Home Depot	
Protective Casing	4" Steel	Global	
Paint	Safety Yellow. Rustoleum	Home Depot	
Rod Lubricant	NA	NA	
Compressor Oil	NA	NA	

To the best of my knowledge, I certify that the above described materials were used during the installation of this monitoring well.

Signature of Site Geologist: Robert Balkovec

MONITORING WELL MATERIALS

CERTIFICATE OF CONFORMANCE

Well Designation:	13MWT07	Site Geologist:	BOB BALKOVEC
Site Name:	SWMU 13 MINE FILL B	Drilling Company:	BOWSER MORNER
Date Installed:	3/29/2003	Driller:	DAVE S.
Project Name:	NSWC CRANE	Project Number:	N9060 CTO 0279

MATERIAL	BRAND/DESCRIPTION	SOURCE/SUPPLIER	SAMPLE COLLECTED?
Well Casing	2" PVC / Schedule 40	Boart Longyear ASTM F480-88A	NO
Well Screen	2" PVC / 20 Slot / Schedule 40	Boart Longyear ASTM F480-88A	
End Cap	2" PVC / Schedule 40	Boart Longyear ASTM F480-88A	
Drilling Fluid	NA	NA	
Drilling Fluid Additives	NA	NA	
Backfill Material	Portland Cement	Home Depot	
Annular Filter Pack	#5 Global Sand	Global	
Bentonite Seal	Pure Gold Medium Chips	Global	
Annular Grout	Quik Grout Bentonite Powder	Global	
Surface Cement	Portland Cement	Home Depot	
Protective Casing	4" Steel	Global	
Paint	Safety Yellow. Rustoleum	Home Depot	
Rod Lubricant	NA	NA	
Compressor Oil	NA	NA	

To the best of my knowledge, I certify that the above described materials were used during the installation of this monitoring well.

Signature of Site Geologist: Robert Balkovec

MONITORING WELL MATERIALS

CERTIFICATE OF CONFORMANCE

Well Designation:	13MWT08	Site Geologist:	BOB BALKOVEC
Site Name:	SWMU 13 MINE FILL B	Drilling Company:	BOWSER MORNER
Date Installed:	3/30/2003	Driller:	DAVE S.
Project Name:	NSWC CRANE	Project Number:	N9060 CTO 0279

MATERIAL	BRAND/DESCRIPTION	SOURCE/SUPPLIER	SAMPLE COLLECTED?
Well Casing	2" PVC / Schedule 40	Boart Longyear ASTM F480-88A	No
Well Screen	2" PVC / 20 Slot / Schedule 40	Boart Longyear ASTM F480-88A	
End Cap	2" PVC / Schedule 40	Boart Longyear ASTM F480-88A	
Drilling Fluid	NA	NA	
Drilling Fluid Additives	NA	NA	
Backfill Material	Portland Cement	Home Depot	
Annular Filter Pack	#5 Global Sand	Global	
Bentonite Seal	Pure Gold Medium Chips	Global	
Annular Grout	Quik Grout Bentonite Powder	Global	
Surface Cement	Portland Cement	Home Depot	
Protective Casing	4" Steel	Global	
Paint	Safety Yellow. Rustoleum	Home Depot	
Rod Lubricant	NA	NA	
Compressor Oil	NA	NA	

To the best of my knowledge, I certify that the above described materials were used during the installation of this monitoring well.

Signature of Site Geologist: Robert Balkovec

MONITORING WELL MATERIALS

CERTIFICATE OF CONFORMANCE

Well Designation:	13MWT09	Site Geologist:	BOB BALKOVEC
Site Name:	SWMU 13 MINE FILL B	Drilling Company:	BOWSER MORNER
Date Installed:	4/1/2003	Driller:	DAVE S.
Project Name:	NSWC CRANE	Project Number:	N9060 CTO 0279

MATERIAL	BRAND/DESCRIPTION	SOURCE/SUPPLIER	SAMPLE COLLECTED?
Well Casing	2" PVC / Schedule 40	Boart Longyear ASTM F480-88A	NO
Well Screen	2" PVC / 20 Slot / Schedule 40	Boart Longyear ASTM F480-88A	
End Cap	2" PVC / Schedule 40	Boart Longyear ASTM F480-88A	
Drilling Fluid	NA	NA	
Drilling Fluid Additives	NA	NA	
Backfill Material	Portland Cement	Home Depot	
Annular Filter Pack	#5 Global Sand	Global	
Bentonite Seal	Pure Gold Medium Chips	Global	
Annular Grout	Quik Grout Bentonite Powder	Global	
Surface Cement	Portland Cement	Home Depot	
Protective Casing	4" Steel	Global	
Paint	Safety Yellow. Rustoleum	Home Depot	
Rod Lubricant	NA	NA	
Compressor Oil	NA	NA	

To the best of my knowledge, I certify that the above described materials were used during the installation of this monitoring well.

Signature of Site Geologist: Robert Balkovec

MONITORING WELL MATERIALS

CERTIFICATE OF CONFORMANCE

Well Designation:	13MWT10	Site Geologist:	BOB BALKOVEC
Site Name:	SWMU 13 MINE FILL B	Drilling Company:	BOWSER MORNER
Date Installed:	3/27/2003	Driller:	DAVE S.
Project Name:	NSWC CRANE	Project Number:	N9060 CTO 0279

MATERIAL	BRAND/DESCRIPTION	SOURCE/SUPPLIER	SAMPLE COLLECTED?
Well Casing	2" PVC / Schedule 40	Boart Longyear ASTM F480-88A	NO
Well Screen	2" PVC / 20 Slot / Schedule 40	Boart Longyear ASTM F480-88A	
End Cap	2" PVC / Schedule 40	Boart Longyear ASTM F480-88A	
Drilling Fluid	NA	NA	
Drilling Fluid Additives	NA	NA	
Backfill Material	Portland Cement	Home Depot	
Annular Filter Pack	#5 Global Sand	Global	
Bentonite Seal	Pure Gold Medium Chips	Global	
Annular Grout	Quik Grout Bentonite Powder	Global	
Surface Cement	Portland Cement	Home Depot	
Protective Casing	4" Steel	Global	
Paint	Safety Yellow. Rustoleum	Home Depot	
Rod Lubricant	NA	NA	
Compressor Oil	NA	NA	

To the best of my knowledge, I certify that the above described materials were used during the installation of this monitoring well.

Signature of Site Geologist: Robert Balkovec

MONITORING WELL MATERIALS

CERTIFICATE OF CONFORMANCE

Well Designation:	13MWT11	Site Geologist:	BOB BALKOVEC
Site Name:	SWMU 13 MINE FILL B	Drilling Company:	BOWSER MORNER
Date Installed:	3/28/2003	Driller:	DAVE S.
Project Name:	NSWC CRANE	Project Number:	N9060 CTO 0279

MATERIAL	BRAND/DESCRIPTION	SOURCE/SUPPLIER	SAMPLE COLLECTED?
Well Casing	2" PVC / Schedule 40	Boart Longyear ASTM F480-88A	NO
Well Screen	2" PVC / 20 Slot / Schedule 40	Boart Longyear ASTM F480-88A	
End Cap	2" PVC / Schedule 40	Boart Longyear ASTM F480-88A	
Drilling Fluid	NA	NA	
Drilling Fluid Additives	NA	NA	
Backfill Material	Portland Cement	Home Depot	
Annular Filter Pack	#5 Global Sand	Global	
Bentonite Seal	Pure Gold Medium Chips	Global	
Annular Grout	Quik Grout Bentonite Powder	Global	
Surface Cement	Portland Cement	Home Depot	
Protective Casing	4" Steel	Global	
Paint	Safety Yellow. Rustoleum	Home Depot	✓
Rod Lubricant	NA	NA	
Compressor Oil	NA	NA	

To the best of my knowledge, I certify that the above described materials were used during the installation of this monitoring well.

Signature of Site Geologist: Robert Balkovec

MONITORING WELL MATERIALS

CERTIFICATE OF CONFORMANCE

Well Designation:	13MWT12	Site Geologist:	BOB BALKOVEC
Site Name:	SWMU 13 MINE FILL B	Drilling Company:	BOWSER MORNER
Date Installed:	3/27/2003	Driller:	DAVE S.
Project Name:	NSWC CRANE	Project Number:	N9060 CTO 0279

MATERIAL	BRAND/DESCRIPTION	SOURCE/SUPPLIER	SAMPLE COLLECTED?
Well Casing	2" PVC / Schedule 40	Boart Longyear ASTM F480-88A	NO
Well Screen	2" PVC / 20 Slot / Schedule 40	Boart Longyear ASTM F480-88A	
End Cap	2" PVC / Schedule 40	Boart Longyear ASTM F480-88A	
Drilling Fluid	NA	NA	
Drilling Fluid Additives	NA	NA	
Backfill Material	Portland Cement	Home Depot	
Annular Filter Pack	#5 Global Sand	Global	
Bentonite Seal	Pure Gold Medium Chips	Global	
Annular Grout	Quik Grout Bentonite Powder	Global	
Surface Cement	Portland Cement	Home Depot	
Protective Casing	4" Steel	Global	
Paint	Safety Yellow. Rustoleum	Home Depot	
Rod Lubricant	NA	NA	
Compressor Oil	NA	NA	

To the best of my knowledge, I certify that the above described materials were used during the installation of this monitoring well.

Signature of Site Geologist: Robert Balkovec

MONITORING WELL MATERIALS

CERTIFICATE OF CONFORMANCE

Well Designation:	13MWT13	Site Geologist:	BOB BALKOVEC
Site Name:	SWMU 13 MINE FILL B	Drilling Company:	BOWSER MORNER
Date Installed:	4/23/2003	Driller:	DAVE S.
Project Name:	NSWC CRANE	Project Number:	N9060 CTO 0279

MATERIAL	BRAND/DESCRIPTION	SOURCE/SUPPLIER	SAMPLE COLLECTED?
Well Casing	2" PVC / Schedule 40	Boart Longyear ASTM F480-88A	NO
Well Screen	2" PVC / 20 Slot / Schedule 40	Boart Longyear ASTM F480-88A	
End Cap	2" PVC / Schedule 40	Boart Longyear ASTM F480-88A	
Drilling Fluid	NA	NA	
Drilling Fluid Additives	NA	NA	
Backfill Material	Portland Cement	Home Depot	
Annular Filter Pack	#5 Global Sand	Global	
Bentonite Seal	Pure Gold Medium Chips	Global	
Annular Grout	Quik Grout Bentonite Powder	Global	
Surface Cement	Portland Cement	Home Depot	
Protective Casing	4" Steel	Global	
Paint	Safety Yellow. Rustoleum	Home Depot	
Rod Lubricant	NA	NA	
Compressor Oil	NA	NA	

To the best of my knowledge, I certify that the above described materials were used during the installation of this monitoring well.

Signature of Site Geologist: Robert Balkovec

MONITORING WELL MATERIALS

CERTIFICATE OF CONFORMANCE

Well Designation:	13MWT14	Site Geologist:	BOB BALKOVEC
Site Name:	SWMU 13 MINE FILL B	Drilling Company:	BOWSER MORNER
Date Installed:	3/31/2003	Driller:	DAVE S.
Project Name:	NSWC CRANE	Project Number:	N9060 CTO 0279

MATERIAL	BRAND/DESCRIPTION	SOURCE/SUPPLIER	SAMPLE COLLECTED?
Well Casing	2" PVC / Schedule 40	Boart Longyear ASTM F480-88A	NO
Well Screen	2" PVC / 20 Slot / Schedule 40	Boart Longyear ASTM F480-88A	
End Cap	2" PVC / Schedule 40	Boart Longyear ASTM F480-88A	
Drilling Fluid	NA	NA	
Drilling Fluid Additives	NA	NA	
Backfill Material	Portland Cement	Home Depot	
Annular Filter Pack	#5 Global Sand	Global	
Bentonite Seal	Pure Gold Medium Chips	Global	
Annular Grout	Quik Grout Bentonite Powder	Global	
Surface Cement	Portland Cement	Home Depot	
Protective Casing	4" Steel	Global	
Paint	Safety Yellow. Rustoleum	Home Depot	
Rod Lubricant	NA	NA	
Compressor Oil	NA	NA	

To the best of my knowledge, I certify that the above described materials were used during the installation of this monitoring well.

Signature of Site Geologist: Robert Balkovec

MONITORING WELL MATERIALS

CERTIFICATE OF CONFORMANCE

Well Designation: 13MWT15
Site Name: SWMU 13 MINE FILL B
Date Installed: 3/25/2003
Project Name: NSWC CRANE

Site Geologist: BOB BALKOVEC
Drilling Company: BOWSER MORNER
Driller: DAVE S.
Project Number: N9060 CTO 0279

MATERIAL	BRAND/DESCRIPTION	SOURCE/SUPPLIER	SAMPLE COLLECTED?
Well Casing	2" PVC / Schedule 40	Boart Longyear ASTM F480-88A	NO
Well Screen	2" PVC / 20 Slot / Schedule 40	Boart Longyear ASTM F480-88A	
End Cap	2" PVC / Schedule 40	Boart Longyear ASTM F480-88A	
Drilling Fluid	NA	NA	
Drilling Fluid Additives	NA	NA	
Backfill Material	Portland Cement	Home Depot	
Annular Filter Pack	#5 Global Sand	Global	
Bentonite Seal	Pure Gold Medium Chips	Global	
Annular Grout	Quik Grout Bentonite Powder	Global	
Surface Cement	Portland Cement	Home Depot	
Protective Casing	4" Steel	Global	
Paint	Safety Yellow. Rustoleum	Home Depot	
Rod Lubricant	NA	NA	
Compressor Oil	NA	NA	

To the best of my knowledge, I certify that the above described materials were used during the installation of this monitoring well.

Signature of Site Geologist: Robert Balkovec

MONITORING WELL MATERIALS

CERTIFICATE OF CONFORMANCE

Well Designation:	13MWT16	Site Geologist:	BOB BALKOVEC
Site Name:	SWMU 13 MINE FILL B	Drilling Company:	BOWSER MORNER
Date Installed:	3/27/2003	Driller:	DAVE S.
Project Name:	NSWC CRANE	Project Number:	N9060 CTO 0279

MATERIAL	BRAND/DESCRIPTION	SOURCE/SUPPLIER	SAMPLE COLLECTED?
Well Casing	2" PVC / Schedule 40	Boart Longyear ASTM F480-88A	NO
Well Screen	2" PVC / 20 Slot / Schedule 40	Boart Longyear ASTM F480-88A	
End Cap	2" PVC / Schedule 40	Boart Longyear ASTM F480-88A	
Drilling Fluid	NA	NA	
Drilling Fluid Additives	NA	NA	
Backfill Material	Portland Cement	Home Depot	
Annular Filter Pack	#5 Global Sand	Global	
Bentonite Seal	Pure Gold Medium Chips	Global	
Annular Grout	Quik Grout Bentonite Powder	Global	
Surface Cement	Portland Cement	Home Depot	
Protective Casing	4" Steel	Global	
Paint	Safety Yellow. Rustoleum	Home Depot	
Rod Lubricant	NA	NA	
Compressor Oil	NA	NA	

To the best of my knowledge, I certify that the above described materials were used during the installation of this monitoring well.

Signature of Site Geologist: Robert Balkovec

MONITORING WELL MATERIALS

CERTIFICATE OF CONFORMANCE

Well Designation:	13MWT17	Site Geologist:	BOB BALKOVEC
Site Name:	SWMU 13 MINE FILL B	Drilling Company:	BOWSER MORNER
Date Installed:	3/26/2003	Driller:	DAVE S.
Project Name:	NSWC CRANE	Project Number:	N9060 CTO 0279

MATERIAL	BRAND/DESCRIPTION	SOURCE/SUPPLIER	SAMPLE COLLECTED?
Well Casing	2" PVC / Schedule 40	Boart Longyear ASTM F480-88A	NO
Well Screen	2" PVC / 20 Slot / Schedule 40	Boart Longyear ASTM F480-88A	
End Cap	2" PVC / Schedule 40	Boart Longyear ASTM F480-88A	
Drilling Fluid	NA	NA	
Drilling Fluid Additives	NA	NA	
Backfill Material	Portland Cement	Home Depot	
Annular Filter Pack	#5 Global Sand	Global	
Bentonite Seal	Pure Gold Medium Chips	Global	
Annular Grout	Quik Grout Bentonite Powder	Global	
Surface Cement	Portland Cement	Home Depot	
Protective Casing	4" Steel	Global	
Paint	Safety Yellow. Rustoleum	Home Depot	
Rod Lubricant	NA	NA	
Compressor Oil	NA	NA	

To the best of my knowledge, I certify that the above described materials were used during the installation of this monitoring well.

Signature of Site Geologist: Robert Balkovec

MONITORING WELL MATERIALS

CERTIFICATE OF CONFORMANCE

Well Designation:	13MWT18	Site Geologist:	BOB BALKOVEC
Site Name:	SWMU 13 MINE FILL B	Drilling Company:	BOWSER MORNER
Date Installed:	3/26/2003	Driller:	DAVE S.
Project Name:	NSWC CRANE	Project Number:	N9060 CTO 0279

MATERIAL	BRAND/DESCRIPTION	SOURCE/SUPPLIER	SAMPLE COLLECTED?
Well Casing	2" PVC / Schedule 40	Boart Longyear ASTM F480-88A	NO
Well Screen	2" PVC / 20 Slot / Schedule 40	Boart Longyear ASTM F480-88A	
End Cap	2" PVC / Schedule 40	Boart Longyear ASTM F480-88A	
Drilling Fluid	NA	NA	
Drilling Fluid Additives	NA	NA	
Backfill Material	Portland Cement	Home Depot	
Annular Filter Pack	#5 Global Sand	Global	
Bentonite Seal	Pure Gold Medium Chips	Global	
Annular Grout	Quik Grout Bentonite Powder	Global	
Surface Cement	Portland Cement	Home Depot	
Protective Casing	4" Steel	Global	
Paint	Safety Yellow. Rustoleum	Home Depot	
Rod Lubricant	NA	NA	
Compressor Oil	NA	NA	

To the best of my knowledge, I certify that the above described materials were used during the installation of this monitoring well.

Signature of Site Geologist: Robert Balkovec

MONITORING WELL MATERIALS

CERTIFICATE OF CONFORMANCE

Well Designation:	13MWT19	Site Geologist:	BOB BALKOVEC
Site Name:	SWMU 13 MINE FILL B	Drilling Company:	BOWSER MORNER
Date Installed:	3/31/2003	Driller:	DAVE S.
Project Name:	NSWC CRANE	Project Number:	N9060 CTO 0279

MATERIAL	BRAND/DESCRIPTION	SOURCE/SUPPLIER	SAMPLE COLLECTED?
Well Casing	2" PVC / Schedule 40	Boart Longyear ASTM F480-88A	NO
Well Screen	2" PVC / 20 Slot / Schedule 40	Boart Longyear ASTM F480-88A	
End Cap	2" PVC / Schedule 40	Boart Longyear ASTM F480-88A	
Drilling Fluid	NA	NA	
Drilling Fluid Additives	NA	NA	
Backfill Material	Portland Cement	Home Depot	
Annular Filter Pack	#5 Global Sand	Global	
Bentonite Seal	Pure Gold Medium Chips	Global	
Annular Grout	Quik Grout Bentonite Powder	Global	
Surface Cement	Portland Cement	Home Depot	
Protective Casing	4" Steel	Global	
Paint	Safety Yellow. Rustoleum	Home Depot	
Rod Lubricant	NA	NA	
Compressor Oil	NA	NA	

To the best of my knowledge, I certify that the above described materials were used during the installation of this monitoring well.

Signature of Site Geologist: Robert Balkovec

MONITORING WELL MATERIALS

CERTIFICATE OF CONFORMANCE

Well Designation: 13MWT20
Site Name: SWMU 13 MINE FILL B
Date Installed: 4/1/2003
Project Name: NSWC CRANE

Site Geologist: BOB BALKOVEC
Drilling Company: BOWSER MORNER
Driller: DAVE S.
Project Number: N9060 CTO 0279

MATERIAL	BRAND/DESCRIPTION	SOURCE/SUPPLIER	SAMPLE COLLECTED?
Well Casing	2" PVC / Schedule 40	Boart Longyear ASTM F480-88A	NO
Well Screen	2" PVC / 20 Slot / Schedule 40	Boart Longyear ASTM F480-88A	
End Cap	2" PVC / Schedule 40	Boart Longyear ASTM F480-88A	
Drilling Fluid	NA	NA	
Drilling Fluid Additives	NA	NA	
Backfill Material	Portland Cement	Home Depot	
Annular Filter Pack	#5 Global Sand	Global	
Bentonite Seal	Pure Gold Medium Chips	Global	
Annular Grout	Quik Grout Bentonite Powder	Global	
Surface Cement	Portland Cement	Home Depot	
Protective Casing	4" Steel	Global	
Paint	Safety Yellow. Rustoleum	Home Depot	✓
Rod Lubricant	NA	NA	
Compressor Oil	NA	NA	

To the best of my knowledge, I certify that the above described materials were used during the installation of this monitoring well.

Signature of Site Geologist: Robert Balkovec

MONITORING WELL MATERIALS

CERTIFICATE OF CONFORMANCE

Well Designation:	13MWT21	Site Geologist:	BOB BALKOVEC
Site Name:	SWMU 13 MINE FILL B	Drilling Company:	BOWSER MORNER
Date Installed:	3/28/2003	Driller:	DAVE S.
Project Name:	NSWC CRANE	Project Number:	N9060 CTO 0279

MATERIAL	BRAND/DESCRIPTION	SOURCE/SUPPLIER	SAMPLE COLLECTED?
Well Casing	2" PVC / Schedule 40	Boart Longyear ASTM F480-88A	NO
Well Screen	2" PVC / 20 Slot / Schedule 40	Boart Longyear ASTM F480-88A	
End Cap	2" PVC / Schedule 40	Boart Longyear ASTM F480-88A	
Drilling Fluid	NA	NA	
Drilling Fluid Additives	NA	NA	
Backfill Material	Portland Cement	Home Depot	
Annular Filter Pack	#5 Global Sand	Global	
Bentonite Seal	Pure Gold Medium Chips	Global	
Annular Grout	Quik Grout Bentonite Powder	Global	
Surface Cement	Portland Cement	Home Depot	
Protective Casing	4" Steel	Global	
Paint	Safety Yellow. Rustoleum	Home Depot	
Rod Lubricant	NA	NA	
Compressor Oil	NA	NA	

To the best of my knowledge, I certify that the above described materials were used during the installation of this monitoring well.

Signature of Site Geologist: Robert Balkovec

MONITORING WELL MATERIALS

CERTIFICATE OF CONFORMANCE

Well Designation:	13MWT22	Site Geologist:	BOB BALKOVEC
Site Name:	SWMU 13 MINE FILL B	Drilling Company:	BOWSER MORNER
Date Installed:	3/28/2003	Driller:	DAVE S.
Project Name:	NSWC CRANE	Project Number:	N9060 CTO 0279

MATERIAL	BRAND/DESCRIPTION	SOURCE/SUPPLIER	SAMPLE COLLECTED?
Well Casing	2" PVC / Schedule 40	Boart Longyear ASTM F480-88A	NO
Well Screen	2" PVC / 20 Slot / Schedule 40	Boart Longyear ASTM F480-88A	
End Cap	2" PVC / Schedule 40	Boart Longyear ASTM F480-88A	
Drilling Fluid	NA	NA	
Drilling Fluid Additives	NA	NA	
Backfill Material	Portland Cement	Home Depot	
Annular Filter Pack	#5 Global Sand	Global	
Bentonite Seal	Pure Gold Medium Chips	Global	
Annular Grout	Quik Grout Bentonite Powder	Global	
Surface Cement	Portland Cement	Home Depot	
Protective Casing	4" Steel	Global	
Paint	Safety Yellow. Rustoleum	Home Depot	
Rod Lubricant	NA	NA	
Compressor Oil	NA	NA	

To the best of my knowledge, I certify that the above described materials were used during the installation of this monitoring well.

Signature of Site Geologist: Robert Balkovec

MONITORING WELL MATERIALS

CERTIFICATE OF CONFORMANCE

Well Designation:	13MWT23	Site Geologist:	BOB BALKOVEC
Site Name:	SWMU 13 MINE FILL B	Drilling Company:	BOWSER MORNER
Date Installed:	4/1/2003	Driller:	DAVE S.
Project Name:	NSWC CRANE	Project Number:	N9060 CTO 0279

MATERIAL	BRAND/DESCRIPTION	SOURCE/SUPPLIER	SAMPLE COLLECTED?
Well Casing	2" PVC / Schedule 40	Boart Longyear ASTM F480-88A	ND
Well Screen	2" PVC / 20 Slot / Schedule 40	Boart Longyear ASTM F480-88A	
End Cap	2" PVC / Schedule 40	Boart Longyear ASTM F480-88A	
Drilling Fluid	NA	NA	
Drilling Fluid Additives	NA	NA	
Backfill Material	Portland Cement	Home Depot	
Annular Filter Pack	#5 Global Sand	Global	
Bentonite Seal	Pure Gold Medium Chips	Global	
Annular Grout	Quik Grout Bentonite Powder	Global	
Surface Cement	Portland Cement	Home Depot	
Protective Casing	4" Steel	Global	
Paint	Safety Yellow. Rustoleum	Home Depot	
Rod Lubricant	NA	NA	
Compressor Oil	NA	NA	

To the best of my knowledge, I certify that the above described materials were used during the installation of this monitoring well.

Signature of Site Geologist: Robert Balkovec

MONITORING WELL MATERIALS

CERTIFICATE OF CONFORMANCE

Well Designation:	13MWT24	Site Geologist:	BOB BALKOVEC
Site Name:	SWMU 13 MINE FILL B	Drilling Company:	BOWSER MORNER
Date Installed:	4/1/2003	Driller:	DAVE S.
Project Name:	NSWC CRANE	Project Number:	N9060 CTO 0279

MATERIAL	BRAND/DESCRIPTION	SOURCE/SUPPLIER	SAMPLE COLLECTED?
Well Casing	2" PVC / Schedule 40	Boart Longyear ASTM F480-88A	NO
Well Screen	2" PVC / 20 Slot / Schedule 40	Boart Longyear ASTM F480-88A	
End Cap	2" PVC / Schedule 40	Boart Longyear ASTM F480-88A	
Drilling Fluid	NA	NA	
Drilling Fluid Additives	NA	NA	
Backfill Material	Portland Cement	Home Depot	
Annular Filter Pack	#5 Global Sand	Global	
Bentonite Seal	Pure Gold Medium Chips	Global	
Annular Grout	Quik Grout Bentonite Powder	Global	
Surface Cement	Portland Cement	Home Depot	
Protective Casing	4" Steel	Global	
Paint	Safety Yellow. Rustoleum	Home Depot	
Rod Lubricant	NA	NA	
Compressor Oil	NA	NA	

To the best of my knowledge, I certify that the above described materials were used during the installation of this monitoring well.

Signature of Site Geologist: Robert Balkovec

MONITORING WELL MATERIALS

CERTIFICATE OF CONFORMANCE

Well Designation: 13MWT25
Site Name: SWMU 13 MINE FILL B
Date Installed: 3/28/2003
Project Name: NSWC CRANE

Site Geologist: BOB BALKOVEC
Drilling Company: BOWSER MORNER
Driller: DAVE S.
Project Number: N9060 CTO 0279

MATERIAL	BRAND/DESCRIPTION	SOURCE/SUPPLIER	SAMPLE COLLECTED?
Well Casing	2" PVC / Schedule 40	Boart Longyear ASTM F480-88A	NO
Well Screen	2" PVC / 20 Slot / Schedule 40	Boart Longyear ASTM F480-88A	
End Cap	2" PVC / Schedule 40	Boart Longyear ASTM F480-88A	
Drilling Fluid	NA	NA	
Drilling Fluid Additives	NA	NA	
Backfill Material	Portland Cement	Home Depot	
Annular Filter Pack	#5 Global Sand	Global	
Bentonite Seal	Pure Gold Medium Chips	Global	
Annular Grout	Quik Grout Bentonite Powder	Global	
Surface Cement	Portland Cement	Home Depot	
Protective Casing	4" Steel	Global	
Paint	Safety Yellow. Rustoleum	Home Depot	
Rod Lubricant	NA	NA	
Compressor Oil	NA	NA	

To the best of my knowledge, I certify that the above described materials were used during the installation of this monitoring well.

Signature of Site Geologist: Robert Balkovec

MONITORING WELL MATERIALS

CERTIFICATE OF CONFORMANCE

Well Designation:	13MWT26	Site Geologist:	BOB BALKOVEC
Site Name:	SWMU 13 MINE FILL B	Drilling Company:	BOWSER MORNER
Date Installed:	3/28/2003	Driller:	DAVE S.
Project Name:	NSWC CRANE	Project Number:	N9060 CTO 0279

MATERIAL	BRAND/DESCRIPTION	SOURCE/SUPPLIER	SAMPLE COLLECTED?
Well Casing	2" PVC / Schedule 40	Boart Longyear ASTM F480-88A	No
Well Screen	2" PVC / 20 Slot / Schedule 40	Boart Longyear ASTM F480-88A	
End Cap	2" PVC / Schedule 40	Boart Longyear ASTM F480-88A	
Drilling Fluid	NA	NA	
Drilling Fluid Additives	NA	NA	
Backfill Material	Portland Cement	Home Depot	
Annular Filter Pack	#5 Global Sand	Global	
Bentonite Seal	Pure Gold Medium Chips	Global	
Annular Grout	Quik Grout Bentonite Powder	Global	
Surface Cement	Portland Cement	Home Depot	
Protective Casing	4" Steel	Global	
Paint	Safety Yellow. Rustoleum	Home Depot	
Rod Lubricant	NA	NA	
Compressor Oil	NA	NA	

To the best of my knowledge, I certify that the above described materials were used during the installation of this monitoring well.

Signature of Site Geologist: Robert Balkovec

APPENDIX B.3.2
SWMU 13 MONITORING WELL MATERIALS
CERTIFICATES OF CONFORMANCE
ROUND 2

Tetra Tech NUS. Inc.
CERTIFICATE OF CONFORMANCE

Well Designation: 13MWT27
Site Name: SWMU 13 MINE FILL B
Date Installed: 11/05/03
Project Name: NSWC CRANE

Site Geologist: FRED RAMSER
Drilling Company: Bowser Morner
Driller: JON KEIFER
Project Number: 9060 CTO 279

Material	Brand/Description	Source/Supplier	Sample Collected ?
Well Casing	Boart Longyear ASTM F480-88A PVC	Global Well Supplies	No
Well Screen 2"X 10'	Boart Longyear ASTM F480-88A PVC	Global Well Supplies	No
End Cap	Boart Longyear	Global Well Supplies	No
Drilling Fluid	Potable water	Bldg. #3245 distribution system	Yes
Drilling Fluid Additives	Not used	NA	NA
Backfill Material			
Annular Filter Pack	Global NSF Qtz Sand SEP/18 B	Global Well Supplies	No
Bentonite Seal	CETCO, Pure Gold Med. Chips NSF	Global Well Supplies	No
Annular Grout	Portland Cement & Baroid Bentonite	Global Well Supplies	No
Surface Cement	Concrete Mix Pak Mix	Global Well Supplies	No
Protective Casing	Prepainted	Global Well Supplies	No
Paint	NA	NA	NA
Rod Lubricant	Jet Lube, Inc. – Well Guard	Global Well Supplies	No
Compressor Oil	-	-	-

To the best of my knowledge, I certify that the above described materials were used during installation of this monitoring well.

Signature of Site Geologist: Fred M Ramser

Tetra Tech NUS. Inc.
CERTIFICATE OF CONFORMANCE

Well Designation: 13MWT28
Site Name: SWMU 13 MINE FILL B
Date Installed: 11/19/03
Project Name: NSWC CRANE

Site Geologist: SCOTT GRIER
Drilling Company: Bowser Morner
Driller: JON KEIFER
Project Number: 9060 CTO 279

Material	Brand/Description	Source/Supplier	Sample Collected ?
Well Casing	Boart Longyear ASTM F480-88A PVC	Global Well Supplies	No
Well Screen 2"X 10'	Boart Longyear ASTM F480-88A PVC	Global Well Supplies	No
End Cap	Boart Longyear	Global Well Supplies	No
Drilling Fluid	Potable water	Bldg. #3245 distribution system	Yes
Drilling Fluid Additives	Not used	NA	NA
Backfill Material			
Annular Filter Pack	Global NSF Qtz Sand SEP/18 B	Global Well Supplies	No
Bentonite Seal	CETCO, Pure Gold Med. Chips NSF	Global Well Supplies	No
Annular Grout	Portland Cement & Baroid Bentonite	Global Well Supplies	No
Surface Cement	Concrete Mix Pak Mix	Global Well Supplies	No
Protective Casing	Prepainted	Global Well Supplies	No
Paint	NA	NA	NA
Rod Lubricant	Jet Lube, Inc. – Well Guard	Global Well Supplies	No
Compressor Oil	-	-	-

To the best of my knowledge, I certify that the above described materials were used during installation of this monitoring well.

Signature of Site Geologist: Fred M Rauser FOR SCOTT GRIER

Tetra Tech NUS. Inc.
CERTIFICATE OF CONFORMANCE

Well Designation: 13MWT29
Site Name: SWMU 13 MINE FILL B
Date Installed: 11/04/03
Project Name: NSWC CRANE

Site Geologist: MATT COCHRAN
Drilling Company: Bowser Morner
Driller: J. WALSH
Project Number: 9060 CTO 279

Material	Brand/Description	Source/Supplier	Sample Collected ?
Well Casing	Boart Longyear ASTM F480-88A PVC	Global Well Supplies	No
Well Screen 2"X 10'	Boart Longyear ASTM F480-88A PVC	Global Well Supplies	No
End Cap	Boart Longyear	Global Well Supplies	No
Drilling Fluid	Potable water	Bldg. #3245 distribution system	Yes
Drilling Fluid Additives	Not used	NA	NA
Backfill Material			
Annular Filter Pack	Global NSF Qtz Sand SEP/18 B	Global Well Supplies	No
Bentonite Seal	CETCO, Pure Gold Med. Chips NSF	Global Well Supplies	No
Annular Grout	Portland Cement & Baroid Bentonite	Global Well Supplies	No
Surface Cement	Concrete Mix Pak Mix	Global Well Supplies	No
Protective Casing	Prepainted	Global Well Supplies	No
Paint	NA	NA	NA
Rod Lubricant	Jet Lube, Inc. – Well Guard	Global Well Supplies	No
Compressor Oil	-	-	-

To the best of my knowledge, I certify that the above described materials were used during installation of this monitoring well.

Signature of Site Geologist: [illegible] FOR MATT C.

Tetra Tech NUS. Inc.
CERTIFICATE OF CONFORMANCE

Well Designation: 13MWT30
Site Name: SWMU 13 MINE FILL B
Date Installed: 11/06/03
Project Name: NSWC CRANE

Site Geologist: MATT COCHRAN
Drilling Company: Bowser Morner
Driller: J. WALSH
Project Number: 9060 CTO 279

Material	Brand/Description	Source/Supplier	Sample Collected ?
Well Casing	Boart Longyear ASTM F480-88A PVC	Global Well Supplies	No
Well Screen 2"X 10'	Boart Longyear ASTM F480-88A PVC	Global Well Supplies	No
End Cap	Boart Longyear	Global Well Supplies	No
Drilling Fluid	Potable water	Bldg. #3245 distribution system	Yes
Drilling Fluid Additives	Not used	NA	NA
Backfill Material			
Annular Filter Pack	Global NSF Qtz Sand SEP/18 B	Global Well Supplies	No
Bentonite Seal	CETCO, Pure Gold Med. Chips NSF	Global Well Supplies	No
Annular Grout	Portland Cement & Baroid Bentonite	Global Well Supplies	No
Surface Cement	Concrete Mix Pak Mix	Global Well Supplies	No
Protective Casing	Prepainted	Global Well Supplies	No
Paint	NA	NA	NA
Rod Lubricant	Jet Lube, Inc. – Well Guard	Global Well Supplies	No
Compressor Oil	-	-	-

To the best of my knowledge, I certify that the above described materials were used during installation of this monitoring well.

Signature of Site Geologist: [illegible] FOR MATT C.

Tetra Tech NUS. Inc.
CERTIFICATE OF CONFORMANCE

Well Designation: 13MWT31
Site Name: SWMU 13 MINE FILL B
Date Installed: 11/05/03
Project Name: NSWC CRANE

Site Geologist: MATT COCHRAN
Drilling Company: Bowser Morner
Driller: J. WALSH
Project Number: 9060 CTO 279

Material	Brand/Description	Source/Supplier	Sample Collected ?
Well Casing	Boart Longyear ASTM F480-88A PVC	Global Well Supplies	No
Well Screen 2"X 10'	Boart Longyear ASTM F480-88A PVC	Global Well Supplies	No
End Cap	Boart Longyear	Global Well Supplies	No
Drilling Fluid	Potable water	Bldg. #3245 distribution system	Yes
Drilling Fluid Additives	Not used	NA	NA
Backfill Material			
Annular Filter Pack	Global NSF Qtz Sand SEP/18 B	Global Well Supplies	No
Bentonite Seal	CETCO, Pure Gold Med. Chips NSF	Global Well Supplies	No
Annular Grout	Portland Cement & Baroid Bentonite	Global Well Supplies	No
Surface Cement	Concrete Mix Pak Mix	Global Well Supplies	No
Protective Casing	Prepainted	Global Well Supplies	No
Paint	NA	NA	NA
Rod Lubricant	Jet Lube, Inc. – Well Guard	Global Well Supplies	No
Compressor Oil	-	-	-

To the best of my knowledge, I certify that the above described materials were used during installation of this monitoring well.

Signature of Site Geologist: Fred Allanson FOR MATT C.

Tetra Tech NUS. Inc.
CERTIFICATE OF CONFORMANCE

Well Designation: 13MWT32
Site Name: SWMU 13 MINE FILL B
Date Installed: 10/29/03
Project Name: NSWC CRANE

Site Geologist: FRED RAMSER
Drilling Company: Bowser Morner
Driller: JOHN KEIFER
Project Number: 9060 CTO 279

Material	Brand/Description	Source/Supplier	Sample Collected ?
Well Casing	Boart Longyear ASTM F480-88A PVC	Global Well Supplies	No
Well Screen 2"X 10'	Boart Longyear ASTM F480-88A PVC	Global Well Supplies	No
End Cap	Boart Longyear	Global Well Supplies	No
Drilling Fluid	Potable water	Bldg. #3245 distribution system	Yes
Drilling Fluid Additives	Not used	NA	NA
Backfill Material			
Annular Filter Pack	Global NSF Qtz Sand SEP/18 B	Global Well Supplies	No
Bentonite Seal	CETCO, Pure Gold Med. Chips NSF	Global Well Supplies	No
Annular Grout	Portland Cement & Baroid Bentonite	Global Well Supplies	No
Surface Cement	Concrete Mix Pak Mix	Global Well Supplies	No
Protective Casing	Prepainted	Global Well Supplies	No
Paint	NA	NA	NA
Rod Lubricant	Jet Lube, Inc. – Well Guard	Global Well Supplies	No
Compressor Oil	-	-	-

To the best of my knowledge, I certify that the above described materials were used during installation of this monitoring well.

Signature of Site Geologist: Fred M Ramser

Tetra Tech NUS. Inc.
CERTIFICATE OF CONFORMANCE

Well Designation: 13MWT33
Site Name: SWMU 13 MINE FILL B
Date Installed: 11/06/03
Project Name: NSWC CRANE

Site Geologist: MATT COCHRAN
Drilling Company: Bowser Morner
Driller: J. WALSH
Project Number: 9060 CTO 279

Material	Brand/Description	Source/Supplier	Sample Collected ?
Well Casing	Boart Longyear ASTM F480-88A PVC	Global Well Supplies	No
Well Screen 2"X 10'	Boart Longyear ASTM F480-88A PVC	Global Well Supplies	No
End Cap	Boart Longyear	Global Well Supplies	No
Drilling Fluid	Potable water	Bldg. #3245 distribution system	Yes
Drilling Fluid Additives	Not used	NA	NA
Backfill Material			
Annular Filter Pack	Global NSF Qtz Sand SEP/18 B	Global Well Supplies	No
Bentonite Seal	CETCO, Pure Gold Med. Chips NSF	Global Well Supplies	No
Annular Grout	Portland Cement & Baroid Bentonite	Global Well Supplies	No
Surface Cement	Concrete Mix Pak Mix	Global Well Supplies	No
Protective Casing	Prepainted	Global Well Supplies	No
Paint	NA	NA	NA
Rod Lubricant	Jet Lube, Inc. – Well Guard	Global Well Supplies	No
Compressor Oil	-	-	-

To the best of my knowledge, I certify that the above described materials were used during installation of this monitoring well.

Signature of Site Geologist: Fred Ullsamer for MATT C.

Tetra Tech NUS. Inc.
CERTIFICATE OF CONFORMANCE

Well Designation: 13MWT34
Site Name: SWMU 13 MINE FILL B
Date Installed: 11/11/03
Project Name: NSWC CRANE

Site Geologist: MATT COCHRAN
Drilling Company: Bowser Morner
Driller: J. WALSH
Project Number: 9060 CTO 279

Material	Brand/Description	Source/Supplier	Sample Collected ?
Well Casing	Boart Longyear ASTM F480-88A PVC	Global Well Supplies	No
Well Screen 2"X 10'	Boart Longyear ASTM F480-88A PVC	Global Well Supplies	No
End Cap	Boart Longyear	Global Well Supplies	No
Drilling Fluid	Potable water	Bldg. #3245 distribution system	Yes
Drilling Fluid Additives	Not used	NA	NA
Backfill Material			
Annular Filter Pack	Global NSF Qtz Sand SEP/18 B	Global Well Supplies	No
Bentonite Seal	CETCO, Pure Gold Med. Chips NSF	Global Well Supplies	No
Annular Grout	Portland Cement & Baroid Bentonite	Global Well Supplies	No
Surface Cement	Concrete Mix Pak Mix	Global Well Supplies	No
Protective Casing	Prepainted	Global Well Supplies	No
Paint	NA	NA	NA
Rod Lubricant	Jet Lube, Inc. – Well Guard	Global Well Supplies	No
Compressor Oil	-	-	-

To the best of my knowledge, I certify that the above described materials were used during installation of this monitoring well.

Signature of Site Geologist: [illegible] FOR MATT C.

Tetra Tech NUS. Inc.
CERTIFICATE OF CONFORMANCE

Well Designation: 13MWT35
Site Name: SWMU 13 MINE FILL B
Date Installed: 11/19/03
Project Name: NSWC CRANE

Site Geologist: FRED RAMSER
Drilling Company: Bowser Morner
Driller: JON KEIFER
Project Number: 9060 CTO 279

Material	Brand/Description	Source/Supplier	Sample Collected ?
Well Casing	Boart Longyear ASTM F480-88A PVC	Global Well Supplies	No
Well Screen 2"X 10'	Boart Longyear ASTM F480-88A PVC	Global Well Supplies	No
End Cap	Boart Longyear	Global Well Supplies	No
Drilling Fluid	Potable water	Bldg. #3245 distribution system	Yes
Drilling Fluid Additives	Not used	NA	NA
Backfill Material			
Annular Filter Pack	Global NSF Qtz Sand SEP/18 B	Global Well Supplies	No
Bentonite Seal	CETCO, Pure Gold Med. Chips NSF	Global Well Supplies	No
Annular Grout	Portland Cement & Baroid Bentonite	Global Well Supplies	No
Surface Cement	Concrete Mix Pak Mix	Global Well Supplies	No
Protective Casing	Prepainted	Global Well Supplies	No
Paint	NA	NA	NA
Rod Lubricant	Jet Lube, Inc. – Well Guard	Global Well Supplies	No
Compressor Oil	-	-	-

To the best of my knowledge, I certify that the above described materials were used during installation of this monitoring well.

Signature of Site Geologist: Fred W Ramser

Tetra Tech NUS. Inc.
CERTIFICATE OF CONFORMANCE

Well Designation: 13MWT36
Site Name: SWMU 13 MINE FILL B
Date Installed: 11/05/03
Project Name: NSWC CRANE

Site Geologist: MATT COCHRAN
Drilling Company: Bowser Morner
Driller: J. WALSH
Project Number: 9060 CTO 279

Material	Brand/Description	Source/Supplier	Sample Collected ?
Well Casing	Boart Longyear ASTM F480-88A PVC	Global Well Supplies	No
Well Screen 2"X 10'	Boart Longyear ASTM F480-88A PVC	Global Well Supplies	No
End Cap	Boart Longyear	Global Well Supplies	No
Drilling Fluid	Potable water	Bldg. #3245 distribution system	Yes
Drilling Fluid Additives	Not used	NA	NA
Backfill Material			
Annular Filter Pack	Global NSF Qtz Sand SEP/18 B	Global Well Supplies	No
Bentonite Seal	CETCO, Pure Gold Med. Chips NSF	Global Well Supplies	No
Annular Grout	Portland Cement & Baroid Bentonite	Global Well Supplies	No
Surface Cement	Concrete Mix Pak Mix	Global Well Supplies	No
Protective Casing	Prepainted	Global Well Supplies	No
Paint	NA	NA	NA
Rod Lubricant	Jet Lube, Inc. – Well Guard	Global Well Supplies	No
Compressor Oil	-	-	-

To the best of my knowledge, I certify that the above described materials were used during installation of this monitoring well.

Signature of Site Geologist: [illegible] FOR MATT C.

Tetra Tech NUS. Inc.
CERTIFICATE OF CONFORMANCE

Well Designation: 13MWT37
Site Name: SWMU 13 MINE FILL B
Date Installed: 10/24/03
Project Name: NSWC CRANE

Site Geologist: FRED RAMSER
Drilling Company: Bowser Morner
Driller: JON KEIFER
Project Number: 9060 CTO 279

Material	Brand/Description	Source/Supplier	Sample Collected ?
Well Casing	Boart Longyear ASTM F480-88A PVC	Global Well Supplies	No
Well Screen 2"X 10'	Boart Longyear ASTM F480-88A PVC	Global Well Supplies	No
End Cap	Boart Longyear	Global Well Supplies	No
Drilling Fluid	Potable water	Bldg. #3245 distribution system	Yes
Drilling Fluid Additives	Not used	NA	NA
Backfill Material			
Annular Filter Pack	Global NSF Qtz Sand SEP/18 B	Global Well Supplies	No
Bentonite Seal	CETCO, Pure Gold Med. Chips NSF	Global Well Supplies	No
Annular Grout	Portland Cement & Baroid Bentonite	Global Well Supplies	No
Surface Cement	Concrete Mix Pak Mix	Global Well Supplies	No
Protective Casing	Prepainted	Global Well Supplies	No
Paint	NA	NA	NA
Rod Lubricant	Jet Lube, Inc. – Well Guard	Global Well Supplies	No
Compressor Oil	-	-	-

To the best of my knowledge, I certify that the above described materials were used during installation of this monitoring well.

Signature of Site Geologist: Fred W Ramser

Tetra Tech NUS. Inc.
CERTIFICATE OF CONFORMANCE

Well Designation: 13MWT38
Site Name: SWMU 13 MINE FILL B
Date Installed: 11/04/03
Project Name: NSWC CRANE

Site Geologist: FRED RAMSER
Drilling Company: Bowser Morner
Driller: JON KEIFER
Project Number: 9060 CTO 279

Material	Brand/Description	Source/Supplier	Sample Collected ?
Well Casing	Boart Longyear ASTM F480-88A PVC	Global Well Supplies	No
Well Screen 2"X 10'	Boart Longyear ASTM F480-88A PVC	Global Well Supplies	No
End Cap	Boart Longyear	Global Well Supplies	No
Drilling Fluid	Potable water	Bldg. #3245 distribution system	Yes
Drilling Fluid Additives	Not used	NA	NA
Backfill Material			
Annular Filter Pack	Global NSF Qtz Sand SEP/18 B	Global Well Supplies	No
Bentonite Seal	CETCO, Pure Gold Med. Chips NSF	Global Well Supplies	No
Annular Grout	Portland Cement & Baroid Bentonite	Global Well Supplies	No
Surface Cement	Concrete Mix Pak Mix	Global Well Supplies	No
Protective Casing	Prepainted	Global Well Supplies	No
Paint	NA	NA	NA
Rod Lubricant	Jet Lube, Inc. – Well Guard	Global Well Supplies	No
Compressor Oil	-	-	-

To the best of my knowledge, I certify that the above described materials were used during installation of this monitoring well.

Signature of Site Geologist: Fred Ramser

Tetra Tech NUS. Inc.
CERTIFICATE OF CONFORMANCE

Well Designation: 13MWT39
Site Name: SWMU 13 MINE FILL B
Date Installed: 11/04/03
Project Name: NSWC CRANE

Site Geologist: FRED RAMSER
Drilling Company: Bowser Morner
Driller: JON KEIFER
Project Number: 9060 CTO 279

Material	Brand/Description	Source/Supplier	Sample Collected ?
Well Casing	Boart Longyear ASTM F480-88A PVC	Global Well Supplies	No
Well Screen 2"X 10'	Boart Longyear ASTM F480-88A PVC	Global Well Supplies	No
End Cap	Boart Longyear	Global Well Supplies	No
Drilling Fluid	Potable water	Bldg. #3245 distribution system	Yes
Drilling Fluid Additives	Not used	NA	NA
Backfill Material			
Annular Filter Pack	Global NSF Qtz Sand SEP/18 B	Global Well Supplies	No
Bentonite Seal	CETCO, Pure Gold Med. Chips NSF	Global Well Supplies	No
Annular Grout	Portland Cement & Baroid Bentonite	Global Well Supplies	No
Surface Cement	Concrete Mix Pak Mix	Global Well Supplies	No
Protective Casing	Prepainted	Global Well Supplies	No
Paint	NA	NA	NA
Rod Lubricant	Jet Lube, Inc. – Well Guard	Global Well Supplies	No
Compressor Oil	-	-	-

To the best of my knowledge, I certify that the above described materials were used during installation of this monitoring well.

Signature of Site Geologist: Fred M Ramser

Tetra Tech NUS. Inc.
CERTIFICATE OF CONFORMANCE

Well Designation: 13MWT40
Site Name: SWMU 13 MINE FILL B
Date Installed: 10/23/03
Project Name: NSWC CRANE

Site Geologist: FRED RAMSER
Drilling Company: Bowser Morner
Driller: JON KEIFER
Project Number: 9060 CTO 279

Material	Brand/Description	Source/Supplier	Sample Collected ?
Well Casing	Boart Longyear ASTM F480-88A PVC	Global Well Supplies	No
Well Screen 2"X 10'	Boart Longyear ASTM F480-88A PVC	Global Well Supplies	No
End Cap	Boart Longyear	Global Well Supplies	No
Drilling Fluid	Potable water	Bldg. #3245 distribution system	Yes
Drilling Fluid Additives	Not used	NA	NA
Backfill Material			
Annular Filter Pack	Global NSF Qtz Sand SEP/18 B	Global Well Supplies	No
Bentonite Seal	CETCO, Pure Gold Med. Chips NSF	Global Well Supplies	No
Annular Grout	Portland Cement & Baroid Bentonite	Global Well Supplies	No
Surface Cement	Concrete Mix Pak Mix	Global Well Supplies	No
Protective Casing	Prepainted	Global Well Supplies	No
Paint	NA	NA	NA
Rod Lubricant	Jet Lube, Inc. – Well Guard	Global Well Supplies	No
Compressor Oil	-	-	-

To the best of my knowledge, I certify that the above described materials were used during installation of this monitoring well.

Signature of Site Geologist: Fred M Ramser

Tetra Tech NUS. Inc.
CERTIFICATE OF CONFORMANCE

Well Designation: 13MWT41
Site Name: SWMU 13 MINE FILL B
Date Installed: 11/10/03
Project Name: NSWC CRANE

Site Geologist: FRED RAMSER
Drilling Company: Bowser Morner
Driller: JON KEIFER
Project Number: 9060 CTO 279

Material	Brand/Description	Source/Supplier	Sample Collected ?
Well Casing	Boart Longyear ASTM F480-88A PVC	Global Well Supplies	No
Well Screen 2"X 10'	Boart Longyear ASTM F480-88A PVC	Global Well Supplies	No
End Cap	Boart Longyear	Global Well Supplies	No
Drilling Fluid	Potable water	Bldg. #3245 distribution system	Yes
Drilling Fluid Additives	Not used	NA	NA
Backfill Material			
Annular Filter Pack	Global NSF Qtz Sand SEP/18 B	Global Well Supplies	No
Bentonite Seal	CETCO, Pure Gold Med. Chips NSF	Global Well Supplies	No
Annular Grout	Portland Cement & Baroid Bentonite	Global Well Supplies	No
Surface Cement	Concrete Mix Pak Mix	Global Well Supplies	No
Protective Casing	Prepainted	Global Well Supplies	No
Paint	NA	NA	NA
Rod Lubricant	Jet Lube, Inc. – Well Guard	Global Well Supplies	No
Compressor Oil	-	-	-

To the best of my knowledge, I certify that the above described materials were used during installation of this monitoring well.

Signature of Site Geologist: Fred M Ramser

Tetra Tech NUS. Inc.
CERTIFICATE OF CONFORMANCE

Well Designation: 13MWT42
Site Name: SWMU 13 MINE FILL B
Date Installed: 10/22/03
Project Name: NSWC CRANE

Site Geologist: FRED RAMSER
Drilling Company: Bowser Morner
Driller: JON KEIFER
Project Number: 9060 CTO 279

Material	Brand/Description	Source/Supplier	Sample Collected ?
Well Casing	Boart Longyear ASTM F480-88A PVC	Global Well Supplies	No
Well Screen 2"X 10'	Boart Longyear ASTM F480-88A PVC	Global Well Supplies	No
End Cap	Boart Longyear	Global Well Supplies	No
Drilling Fluid	Potable water	Bldg. #3245 distribution system	Yes
Drilling Fluid Additives	Not used	NA	NA
Backfill Material			
Annular Filter Pack	Global NSF Qtz Sand SEP/18 B	Global Well Supplies	No
Bentonite Seal	CETCO, Pure Gold Med. Chips NSF	Global Well Supplies	No
Annular Grout	Portland Cement & Baroid Bentonite	Global Well Supplies	No
Surface Cement	Concrete Mix Pak Mix	Global Well Supplies	No
Protective Casing	Prepainted	Global Well Supplies	No
Paint	NA	NA	NA
Rod Lubricant	Jet Lube, Inc. – Well Guard	Global Well Supplies	No
Compressor Oil	-	-	-

To the best of my knowledge, I certify that the above described materials were used during installation of this monitoring well.

Signature of Site Geologist Fred M Ramser

Tetra Tech NUS. Inc.
CERTIFICATE OF CONFORMANCE

Well Designation: 13MWT43
Site Name: SWMU 13 MINE FILL B
Date Installed: 11/06/03
Project Name: NSWC CRANE

Site Geologist: FRED RAMSER
Drilling Company: Bowser Morner
Driller: JON KEIFER
Project Number: 9060 CTO 279

Material	Brand/Description	Source/Supplier	Sample Collected ?
Well Casing	Boart Longyear ASTM F480-88A PVC	Global Well Supplies	No
Well Screen 2"X 10'	Boart Longyear ASTM F480-88A PVC	Global Well Supplies	No
End Cap	Boart Longyear	Global Well Supplies	No
Drilling Fluid	Potable water	Bldg. #3245 distribution system	Yes
Drilling Fluid Additives	Not used	NA	NA
Backfill Material			
Annular Filter Pack	Global NSF Qtz Sand SEP/18 B	Global Well Supplies	No
Bentonite Seal	CETCO, Pure Gold Med. Chips NSF	Global Well Supplies	No
Annular Grout	Portland Cement & Baroid Bentonite	Global Well Supplies	No
Surface Cement	Concrete Mix Pak Mix	Global Well Supplies	No
Protective Casing	Prepainted	Global Well Supplies	No
Paint	NA	NA	NA
Rod Lubricant	Jet Lube, Inc. – Well Guard	Global Well Supplies	No
Compressor Oil	-	-	-

To the best of my knowledge, I certify that the above described materials were used during installation of this monitoring well.

Signature of Site Geologist: Fred M Ramser

Tetra Tech NUS. Inc.
CERTIFICATE OF CONFORMANCE

Well Designation: 13MWT44
Site Name: SWMU 13 MINE FILL B
Date Installed: 11/10/03
Project Name: NSWC CRANE

Site Geologist: MATT COCHRAN
Drilling Company: Bowser Morner
Driller: J. WALSH
Project Number: 9060 CTO 279

Material	Brand/Description	Source/Supplier	Sample Collected ?
Well Casing	Boart Longyear ASTM F480-88A PVC	Global Well Supplies	No
Well Screen 2"X 10'	Boart Longyear ASTM F480-88A PVC	Global Well Supplies	No
End Cap	Boart Longyear	Global Well Supplies	No
Drilling Fluid	Potable water	Bldg. #3245 distribution system	Yes
Drilling Fluid Additives	Not used	NA	NA
Backfill Material			
Annular Filter Pack	Global NSF Qtz Sand SEP/18 B	Global Well Supplies	No
Bentonite Seal	CETCO, Pure Gold Med. Chips NSF	Global Well Supplies	No
Annular Grout	Portland Cement & Baroid Bentonite	Global Well Supplies	No
Surface Cement	Concrete Mix Pak Mix	Global Well Supplies	No
Protective Casing	Prepainted	Global Well Supplies	No
Paint	NA	NA	NA
Rod Lubricant	Jet Lube, Inc. – Well Guard	Global Well Supplies	No
Compressor Oil	-	-	-

To the best of my knowledge, I certify that the above described materials were used during installation of this monitoring well.

Signature of Site Geologist: Fred M Ramer FOR MATT C.

Tetra Tech NUS. Inc.
CERTIFICATE OF CONFORMANCE

Well Designation: 13MWT45
Site Name: SWMU 13 MINE FILL B
Date Installed: 11/10/03
Project Name: NSWC CRANE

Site Geologist: FRED RAMSER
Drilling Company: Bowser Morner
Driller: JON KEIFER
Project Number: 9060 CTO 279

Material	Brand/Description	Source/Supplier	Sample Collected ?
Well Casing	Boart Longyear ASTM F480-88A PVC	Global Well Supplies	No
Well Screen 2"X 10'	Boart Longyear ASTM F480-88A PVC	Global Well Supplies	No
End Cap	Boart Longyear	Global Well Supplies	No
Drilling Fluid	Potable water	Bldg. #3245 distribution system	Yes
Drilling Fluid Additives	Not used	NA	NA
Backfill Material			
Annular Filter Pack	Global NSF Qtz Sand SEP/18 B	Global Well Supplies	No
Bentonite Seal	CETCO, Pure Gold Med. Chips NSF	Global Well Supplies	No
Annular Grout	Portland Cement & Baroid Bentonite	Global Well Supplies	No
Surface Cement	Concrete Mix Pak Mix	Global Well Supplies	No
Protective Casing	Prepainted	Global Well Supplies	No
Paint	NA	NA	NA
Rod Lubricant	Jet Lube, Inc. – Well Guard	Global Well Supplies	No
Compressor Oil	-	-	-

To the best of my knowledge, I certify that the above described materials were used during installation of this monitoring well.

Signature of Site Geologist: Fred M Ramser

Tetra Tech NUS. Inc.
CERTIFICATE OF CONFORMANCE

Well Designation: 13MWT46
Site Name: SWMU 13 MINE FILL B
Date Installed: 11/22/03
Project Name: NSWC CRANE

Site Geologist: SCOTT GRIER
Drilling Company: Bowser Morner
Driller: JON KEIFER
Project Number: 9060 CTO 279

Material	Brand/Description	Source/Supplier	Sample Collected ?
Well Casing	Boart Longyear ASTM F480-88A PVC	Global Well Supplies	No
Well Screen 2"X 10'	Boart Longyear ASTM F480-88A PVC	Global Well Supplies	No
End Cap	Boart Longyear	Global Well Supplies	No
Drilling Fluid	Potable water	Bldg. #3245 distribution system	Yes
Drilling Fluid Additives	Not used	NA	NA
Backfill Material			
Annular Filter Pack	Global NSF Qtz Sand SEP/18 B	Global Well Supplies	No
Bentonite Seal	CETCO, Pure Gold Med. Chips NSF	Global Well Supplies	No
Annular Grout	Portland Cement & Baroid Bentonite	Global Well Supplies	No
Surface Cement	Concrete Mix Pak Mix	Global Well Supplies	No
Protective Casing	Prepainted	Global Well Supplies	No
Paint	NA	NA	NA
Rod Lubricant	Jet Lube, Inc. – Well Guard	Global Well Supplies	No
Compressor Oil	-	-	-

To the best of my knowledge, I certify that the above described materials were used during installation of this monitoring well.

Signature of Site Geologist: [illegible] FOR SCOTT GRIER

Tetra Tech NUS. Inc.
CERTIFICATE OF CONFORMANCE

Well Designation: 13MWT47
Site Name: SWMU 13 MINE FILL B
Date Installed: 11/20/03
Project Name: NSWC CRANE

Site Geologist: MATT COCHRAN
Drilling Company: Bowser Morner
Driller: J. WALSH
Project Number: 9060 CTO 279

Material	Brand/Description	Source/Supplier	Sample Collected ?
Well Casing	Boart Longyear ASTM F480-88A PVC	Global Well Supplies	No
Well Screen 2"X 10'	Boart Longyear ASTM F480-88A PVC	Global Well Supplies	No
End Cap	Boart Longyear	Global Well Supplies	No
Drilling Fluid	Potable water	Bldg. #3245 distribution system	Yes
Drilling Fluid Additives	Not used	NA	NA
Backfill Material			
Annular Filter Pack	Global NSF Qtz Sand SEP/18 B	Global Well Supplies	No
Bentonite Seal	CETCO, Pure Gold Med. Chips NSF	Global Well Supplies	No
Annular Grout	Portland Cement & Baroid Bentonite	Global Well Supplies	No
Surface Cement	Concrete Mix Pak Mix	Global Well Supplies	No
Protective Casing	Prepainted	Global Well Supplies	No
Paint	NA	NA	NA
Rod Lubricant	Jet Lube, Inc. – Well Guard	Global Well Supplies	No
Compressor Oil	-	-	-

To the best of my knowledge, I certify that the above described materials were used during installation of this monitoring well.

Signature of Site Geologist: [illegible] FOR MATT C.

APPENDIX B.3.3
SWMU 16 MONITORING WELL MATERIALS
CERTIFICATES OF CONFORMANCE
ROUND 1

MONITORING WELL MATERIALS

CERTIFICATE OF CONFORMANCE

Well Designation:	16MWT01	Site Geologist:	BOB BALKOVEC
Site Name:	SWMU 16 CAST HIGH	Drilling Company:	BOWSER MORNER
Date Installed:	4/8/2003	Driller:	DAVE S.
Project Name:	NSWC CRANE	Project Number:	N9060 CTO 0279

MATERIAL	BRAND/DESCRIPTION	SOURCE/SUPPLIER	SAMPLE COLLECTED?
Well Casing	2" PVC / Schedule 40	Boart Longyear ASTM F480-88A	NO
Well Screen	2" PVC / 20 Slot / Schedule 40	Boart Longyear ASTM F480-88A	
End Cap	2" PVC / Schedule 40	Boart Longyear ASTM F480-88A	
Drilling Fluid	NA	NA	
Drilling Fluid Additives	NA	NA	
Backfill Material	Portland Cement	Home Depot	
Annular Filter Pack	#5 Global Sand	Global	
Bentonite Seal	Pure Gold Medium Chips	Global	
Annular Grout	Quik Grout Bentonite Powder	Global	
Surface Cement	Portland Cement	Home Depot	
Protective Casing	4" Steel	Global	
Paint	Safety Yellow. Rustoleum	Home Depot	
Rod Lubricant	NA	NA	
Compressor Oil	NA	NA	

To the best of my knowledge, I certify that the above described materials were used during the installation of this monitoring well.

Signature of Site Geologist: Robert Balkovec

MONITORING WELL MATERIALS

CERTIFICATE OF CONFORMANCE

Well Designation: 16MWT02
Site Name: SWMU 16 CAST HIGH
Date Installed: 4/11/2003
Project Name: NSWC CRANE

Site Geologist: BOB BALKOVEC
Drilling Company: BOWSER MORNER
Driller: DAVE S.
Project Number: N9060 CTO 0279

MATERIAL	BRAND/DESCRIPTION	SOURCE/SUPPLIER	SAMPLE COLLECTED?
Well Casing	2" PVC / Schedule 40	Boart Longyear ASTM F480-88A	NO
Well Screen	2" PVC / 20 Slot / Schedule 40	Boart Longyear ASTM F480-88A	
End Cap	2" PVC / Schedule 40	Boart Longyear ASTM F480-88A	
Drilling Fluid	NA	NA	
Drilling Fluid Additives	NA	NA	
Backfill Material	Portland Cement	Home Depot	
Annular Filter Pack	#5 Global Sand	Global	
Bentonite Seal	Pure Gold Medium Chips	Global	
Annular Grout	Quik Grout Bentonite Powder	Global	
Surface Cement	Portland Cement	Home Depot	
Protective Casing	4" Steel	Global	
Paint	Safety Yellow. Rustoleum	Home Depot	
Rod Lubricant	NA	NA	
Compressor Oil	NA	NA	

To the best of my knowledge, I certify that the above described materials were used during the installation of this monitoring well.

Signature of Site Geologist: Robert Balkovec

MONITORING WELL MATERIALS

CERTIFICATE OF CONFORMANCE

Well Designation:	16MWT03	Site Geologist:	BOB BALKOVEC
Site Name:	SWMU 16 CAST HIGH	Drilling Company:	BOWSER MORNER
Date Installed:	4/10/2003	Driller:	DAVE S.
Project Name:	NSWC CRANE	Project Number:	N9060 CTO 0279

MATERIAL	BRAND/DESCRIPTION	SOURCE/SUPPLIER	SAMPLE COLLECTED?
Well Casing	2" PVC / Schedule 40	Boart Longyear ASTM F480-88A	no
Well Screen	2" PVC / 20 Slot / Schedule 40	Boart Longyear ASTM F480-88A	
End Cap	2" PVC / Schedule 40	Boart Longyear ASTM F480-88A	
Drilling Fluid	NA	NA	
Drilling Fluid Additives	NA	NA	
Backfill Material	Portland Cement	Home Depot	
Annular Filter Pack	#5 Global Sand	Global	
Bentonite Seal	Pure Gold Medium Chips	Global	
Annular Grout	Quik Grout Bentonite Powder	Global	
Surface Cement	Portland Cement	Home Depot	
Protective Casing	4" Steel	Global	
Paint	Safety Yellow. Rustoleum	Home Depot	✓
Rod Lubricant	NA	NA	
Compressor Oil	NA	NA	

To the best of my knowledge, I certify that the above described materials were used during the installation of this monitoring well.

Signature of Site Geologist: Robert Balkovec

MONITORING WELL MATERIALS

CERTIFICATE OF CONFORMANCE

Well Designation: 16MWT04
Site Name: SWMU 16 CAST HIGH
Date Installed: 4/9/2003
Project Name: NSWC CRANE

Site Geologist: BOB BALKOVEC
Drilling Company: BOWSER MORNER
Driller: DAVE S.
Project Number: N9060 CTO 0279

MATERIAL	BRAND/DESCRIPTION	SOURCE/SUPPLIER	SAMPLE COLLECTED?
Well Casing	2" PVC / Schedule 40	Boart Longyear ASTM F480-88A	NO
Well Screen	2" PVC / 20 Slot / Schedule 40	Boart Longyear ASTM F480-88A	
End Cap	2" PVC / Schedule 40	Boart Longyear ASTM F480-88A	
Drilling Fluid	NA	NA	
Drilling Fluid Additives	NA	NA	
Backfill Material	Portland Cement	Home Depot	
Annular Filter Pack	#5 Global Sand	Global	
Bentonite Seal	Pure Gold Medium Chips	Global	
Annular Grout	Quik Grout Bentonite Powder	Global	
Surface Cement	Portland Cement	Home Depot	
Protective Casing	4" Steel	Global	
Paint	Safety Yellow. Rustoleum	Home Depot	
Rod Lubricant	NA	NA	
Compressor Oil	NA	NA	

To the best of my knowledge, I certify that the above described materials were used during the installation of this monitoring well.

Signature of Site Geologist: Robert Balkovec

MONITORING WELL MATERIALS

CERTIFICATE OF CONFORMANCE

Well Designation:	16MWT05	Site Geologist:	BOB BALKOVEC
Site Name:	SWMU 16 CAST HIGH	Drilling Company:	BOWSER MORNER
Date Installed:	4/9/2003	Driller:	DAVE S.
Project Name:	NSWC CRANE	Project Number:	N9060 CTO 0279

MATERIAL	BRAND/DESCRIPTION	SOURCE/SUPPLIER	SAMPLE COLLECTED?
Well Casing	2" PVC / Schedule 40	Boart Longyear ASTM F480-88A	no
Well Screen	2" PVC / 20 Slot / Schedule 40	Boart Longyear ASTM F480-88A	
End Cap	2" PVC / Schedule 40	Boart Longyear ASTM F480-88A	
Drilling Fluid	NA	NA	
Drilling Fluid Additives	NA	NA	
Backfill Material	Portland Cement	Home Depot	
Annular Filter Pack	#5 Global Sand	Global	
Bentonite Seal	Pure Gold Medium Chips	Global	
Annular Grout	Quik Grout Bentonite Powder	Global	
Surface Cement	Portland Cement	Home Depot	
Protective Casing	4" Steel	Global	
Paint	Safety Yellow. Rustoleum	Home Depot	
Rod Lubricant	NA	NA	
Compressor Oil	NA	NA	

To the best of my knowledge, I certify that the above described materials were used during the installation of this monitoring well.

Signature of Site Geologist: Robert Balkovec

MONITORING WELL MATERIALS

CERTIFICATE OF CONFORMANCE

Well Designation:	16MWT06	Site Geologist:	BOB BALKOVEC
Site Name:	SWMU 16 CAST HIGH	Drilling Company:	BOWSER MORNER
Date Installed:	4/24/2003	Driller:	DAVE S.
Project Name:	NSWC CRANE	Project Number:	N9060 CTO 0279

MATERIAL	BRAND/DESCRIPTION	SOURCE/SUPPLIER	SAMPLE COLLECTED?
Well Casing	2" PVC / Schedule 40	Boart Longyear ASTM F480-88A	NO
Well Screen	2" PVC / 20 Slot / Schedule 40	Boart Longyear ASTM F480-88A	
End Cap	2" PVC / Schedule 40	Boart Longyear ASTM F480-88A	
Drilling Fluid	NA	NA	
Drilling Fluid Additives	NA	NA	
Backfill Material	Portland Cement	Home Depot	
Annular Filter Pack	#5 Global Sand	Global	
Bentonite Seal	Pure Gold Medium Chips	Global	
Annular Grout	Quik Grout Bentonite Powder	Global	
Surface Cement	Portland Cement	Home Depot	
Protective Casing	4" Steel	Global	
Paint	Safety Yellow. Rustoleum	Home Depot	
Rod Lubricant	NA	NA	
Compressor Oil	NA	NA	

To the best of my knowledge, I certify that the above described materials were used during the installation of this monitoring well.

Signature of Site Geologist: Robert Balkovec

APPENDIX B.3.4
SWMU 16 MONITORING WELL MATERIALS
CERTIFICATES OF CONFORMANCE
ROUND 2

Tetra Tech NUS. Inc.
CERTIFICATE OF CONFORMANCE

Well Designation: 16MWT07
Site Name: SWMU 16 CAST HIGH
Date Installed: 11/11/03
Project Name: NSWC CRANE

Site Geologist: MATT COCHRAN
Drilling Company: Bowser Morner
Driller: J. WALSH
Project Number: 9060 CTO 279

Material	Brand/Description	Source/Supplier	Sample Collected ?
Well Casing	Boart Longyear ASTM F480-88A PVC	Global Well Supplies	No
Well Screen 2"X 10'	Boart Longyear ASTM F480-88A PVC	Global Well Supplies	No
End Cap	Boart Longyear	Global Well Supplies	No
Drilling Fluid	Potable water	Bldg. #3245 distribution system	Yes
Drilling Fluid Additives	Not used	NA	NA
Backfill Material			
Annular Filter Pack	Global NSF Qtz Sand SEP/18 B	Global Well Supplies	No
Bentonite Seal	CETCO, Pure Gold Med. Chips NSF	Global Well Supplies	No
Annular Grout	Portland Cement & Baroid Bentonite	Global Well Supplies	No
Surface Cement	Concrete Mix Pak Mix	Global Well Supplies	No
Protective Casing	Prepainted	Global Well Supplies	No
Paint	NA	NA	NA
Rod Lubricant	Jet Lube, Inc. – Well Guard	Global Well Supplies	No
Compressor Oil	-	-	-

To the best of my knowledge, I certify that the above described materials were used during installation of this monitoring well.

Signature of Site Geologist: Fred Ullmann FOR MATT C.

Tetra Tech NUS. Inc.
CERTIFICATE OF CONFORMANCE

Well Designation: 16MWT08
Site Name: SWMU 16 CAST HIGH
Date Installed: 11/09/03
Project Name: NSWC CRANE

Site Geologist: FRED RAMSER
Drilling Company: Bowser Morner
Driller: JOHN KEIFER
Project Number: 9060 CTO 279

Material	Brand/Description	Source/Supplier	Sample Collected ?
Well Casing	Boart Longyear ASTM F480-88A PVC	Global Well Supplies	No
Well Screen 2"X 10'	Boart Longyear ASTM F480-88A PVC	Global Well Supplies	No
End Cap	Boart Longyear	Global Well Supplies	No
Drilling Fluid	Potable water	Bldg. #3245 distribution system	Yes
Drilling Fluid Additives	Not used	NA	NA
Backfill Material			
Annular Filter Pack	Global NSF Qtz Sand SEP/18 B	Global Well Supplies	No
Bentonite Seal	CETCO, Pure Gold Med. Chips NSF	Global Well Supplies	No
Annular Grout	Portland Cement & Baroid Bentonite	Global Well Supplies	No
Surface Cement	Concrete Mix Pak Mix	Global Well Supplies	No
Protective Casing	Prepainted	Global Well Supplies	No
Paint	NA	NA	NA
Rod Lubricant	Jet Lube, Inc. – Well Guard	Global Well Supplies	No
Compressor Oil	-	-	-

To the best of my knowledge, I certify that the above described materials were used during installation of this monitoring well.

Signature of Site Geologist: Fred M Ramser

Tetra Tech NUS. Inc.
CERTIFICATE OF CONFORMANCE

Well Designation: 16MWT09
Site Name: SWMU 16 CAST HIGH
Date Installed: 11/08/03
Project Name: NSWC CRANE

Site Geologist: MATT COCHRAN
Drilling Company: Bowser Morner
Driller: J. WALSH
Project Number: 9060 CTO 279

Material	Brand/Description	Source/Supplier	Sample Collected ?
Well Casing	Boart Longyear ASTM F480-88A PVC	Global Well Supplies	No
Well Screen 2"X 10'	Boart Longyear ASTM F480-88A PVC	Global Well Supplies	No
End Cap	Boart Longyear	Global Well Supplies	No
Drilling Fluid	Potable water	Bldg. #3245 distribution system	Yes
Drilling Fluid Additives	Not used	NA	NA
Backfill Material			
Annular Filter Pack	Global NSF Qtz Sand SEP/18 B	Global Well Supplies	No
Bentonite Seal	CETCO, Pure Gold Med. Chips NSF	Global Well Supplies	No
Annular Grout	Portland Cement & Baroid Bentonite	Global Well Supplies	No
Surface Cement	Concrete Mix Pak Mix	Global Well Supplies	No
Protective Casing	Prepainted	Global Well Supplies	No
Paint	NA	NA	NA
Rod Lubricant	Jet Lube, Inc. – Well Guard	Global Well Supplies	No
Compressor Oil	-	-	-

To the best of my knowledge, I certify that the above described materials were used during installation of this monitoring well.

Signature of Site Geologist: Fred Ullauser FOR MATT C.

Tetra Tech NUS. Inc.
CERTIFICATE OF CONFORMANCE

Well Designation: 16MWT10
Site Name: SWMU 16 CAST HIGH
Date Installed: 11/09/03
Project Name: NSWC CRANE

Site Geologist: MATT COCHRAN
Drilling Company: Bowser Morner
Driller: J. WALSH
Project Number: 9060 CTO 279

Material	Brand/Description	Source/Supplier	Sample Collected ?
Well Casing	Boart Longyear ASTM F480-88A PVC	Global Well Supplies	No
Well Screen 2"X 10'	Boart Longyear ASTM F480-88A PVC	Global Well Supplies	No
End Cap	Boart Longyear	Global Well Supplies	No
Drilling Fluid	Potable water	Bldg. #3245 distribution system	Yes
Drilling Fluid Additives	Not used	NA	NA
Backfill Material			
Annular Filter Pack	Global NSF Qtz Sand SEP/18 B	Global Well Supplies	No
Bentonite Seal	CETCO, Pure Gold Med. Chips NSF	Global Well Supplies	No
Annular Grout	Portland Cement & Baroid Bentonite	Global Well Supplies	No
Surface Cement	Concrete Mix Pak Mix	Global Well Supplies	No
Protective Casing	Prepainted	Global Well Supplies	No
Paint	NA	NA	NA
Rod Lubricant	Jet Lube, Inc. – Well Guard	Global Well Supplies	No
Compressor Oil	-	-	-

To the best of my knowledge, I certify that the above described materials were used during installation of this monitoring well.

Signature of Site Geologist: Fred Ulrauser FOR MATT C.

Tetra Tech NUS. Inc.
CERTIFICATE OF CONFORMANCE

Well Designation: 16MWT11
Site Name: SWMU 16 CAST HIGH
Date Installed: 11/11/03
Project Name: NSWC CRANE

Site Geologist: FRED RAMSER
Drilling Company: Bowser Morner
Driller: JON KEIFER
Project Number: 9060 CTO 279

Material	Brand/Description	Source/Supplier	Sample Collected ?
Well Casing	Boart Longyear ASTM F480-88A PVC	Global Well Supplies	No
Well Screen 2"X 10'	Boart Longyear ASTM F480-88A PVC	Global Well Supplies	No
End Cap	Boart Longyear	Global Well Supplies	No
Drilling Fluid	Potable water	Bldg. #3245 distribution system	Yes
Drilling Fluid Additives	Not used	NA	NA
Backfill Material	-		
Annular Filter Pack	Global NSF Qtz Sand SEP/18 B	Global Well Supplies	No
Bentonite Seal	CETCO, Pure Gold Med. Chips NSF	Global Well Supplies	No
Annular Grout	Portland Cement & Baroid Bentonite	Global Well Supplies	No
Surface Cement	Concrete Mix Pak Mix	Global Well Supplies	No
Protective Casing	Prepainted	Global Well Supplies	No
Paint	NA	NA	NA
Rod Lubricant	Jet Lube, Inc. – Well Guard	Global Well Supplies	No
Compressor Oil	-	-	-

To the best of my knowledge, I certify that the above described materials were used during installation of this monitoring well.

Signature of Site Geologist: Fred M Ramser

Tetra Tech NUS. Inc.
CERTIFICATE OF CONFORMANCE

Well Designation: 16MWT12
Site Name: SWMU 16 CAST HIGH
Date Installed: 11/07/03
Project Name: NSWC CRANE

Site Geologist: MATT COCHRAN
Drilling Company: Bowser Morner
Driller: J. WALSH
Project Number: 9060 CTO 279

Material	Brand/Description	Source/Supplier	Sample Collected ?
Well Casing	Boart Longyear ASTM F480-88A PVC	Global Well Supplies	No
Well Screen 2"X 10'	Boart Longyear ASTM F480-88A PVC	Global Well Supplies	No
End Cap	Boart Longyear	Global Well Supplies	No
Drilling Fluid	Potable water	Bldg. #3245 distribution system	Yes
Drilling Fluid Additives	Not used	NA	NA
Backfill Material			
Annular Filter Pack	Global NSF Qtz Sand SEP/18 B	Global Well Supplies	No
Bentonite Seal	CETCO, Pure Gold Med. Chips NSF	Global Well Supplies	No
Annular Grout	Portland Cement & Baroid Bentonite	Global Well Supplies	No
Surface Cement	Concrete Mix Pak Mix	Global Well Supplies	No
Protective Casing	Prepainted	Global Well Supplies	No
Paint	NA	NA	NA
Rod Lubricant	Jet Lube, Inc. – Well Guard	Global Well Supplies	No
Compressor Oil	-	-	-

To the best of my knowledge, I certify that the above described materials were used during installation of this monitoring well.

Signature of Site Geologist: Fred M Rauser FOR MATT C.

Tetra Tech NUS. Inc.
CERTIFICATE OF CONFORMANCE

Well Designation: 16MWT13
Site Name: SWMU 16 CAST HIGH
Date Installed: 11/11/03
Project Name: NSWC CRANE

Site Geologist: MATT COCHRAN
Drilling Company: Bowser Morner
Driller: J. WALSH
Project Number: 9060 CTO 279

Material	Brand/Description	Source/Supplier	Sample Collected ?
Well Casing	Boart Longyear ASTM F480-88A PVC	Global Well Supplies	No
Well Screen 2"X 10'	Boart Longyear ASTM F480-88A PVC	Global Well Supplies	No
End Cap	Boart Longyear	Global Well Supplies	No
Drilling Fluid	Potable water	Bldg. #3245 distribution system	Yes
Drilling Fluid Additives	Not used	NA	NA
Backfill Material			
Annular Filter Pack	Global NSF Qtz Sand SEP/18 B	Global Well Supplies	No
Bentonite Seal	CETCO, Pure Gold Med. Chips NSF	Global Well Supplies	No
Annular Grout	Portland Cement & Baroid Bentonite	Global Well Supplies	No
Surface Cement	Concrete Mix Pak Mix	Global Well Supplies	No
Protective Casing	Prepainted	Global Well Supplies	No
Paint	NA	NA	NA
Rod Lubricant	Jet Lube, Inc. – Well Guard	Global Well Supplies	No
Compressor Oil	-	-	-

To the best of my knowledge, I certify that the above described materials were used during installation of this monitoring well.

Signature of Site Geologist: Fred Ullauser FOR MATT C.

Tetra Tech NUS. Inc.
CERTIFICATE OF CONFORMANCE

Well Designation: 16MWT14
Site Name: SWMU 16 CAST HIGH
Date Installed: 11/07/03
Project Name: NSWC CRANE

Site Geologist: MATT COCHRAN
Drilling Company: Bowser Morner
Driller: J. WALSH
Project Number: 9060 CTO 279

Material	Brand/Description	Source/Supplier	Sample Collected ?
Well Casing	Boart Longyear ASTM F480-88A PVC	Global Well Supplies	No
Well Screen 2"X 10'	Boart Longyear ASTM F480-88A PVC	Global Well Supplies	No
End Cap	Boart Longyear	Global Well Supplies	No
Drilling Fluid	Potable water	Bldg. #3245 distribution system	Yes
Drilling Fluid Additives	Not used	NA	NA
Backfill Material			
Annular Filter Pack	Global NSF Qtz Sand SEP/18 B	Global Well Supplies	No
Bentonite Seal	CETCO, Pure Gold Med. Chips NSF	Global Well Supplies	No
Annular Grout	Portland Cement & Baroid Bentonite	Global Well Supplies	No
Surface Cement	Concrete Mix Pak Mix	Global Well Supplies	No
Protective Casing	Prepainted	Global Well Supplies	No
Paint	NA	NA	NA
Rod Lubricant	Jet Lube, Inc. – Well Guard	Global Well Supplies	No
Compressor Oil	-	-	-

To the best of my knowledge, I certify that the above described materials were used during installation of this monitoring well.

Signature of Site Geologist: Fred M Ramsey FOR MATT C.

Tetra Tech NUS. Inc.
CERTIFICATE OF CONFORMANCE

Well Designation: 16MWT15
Site Name: SWMU 16 CAST HIGH
Date Installed: 11/09/03
Project Name: NSWC CRANE

Site Geologist: FRED RAMSER
Drilling Company: Bowser Morner
Driller: JON KEIFER
Project Number: 9060 CTO 279

Material	Brand/Description	Source/Supplier	Sample Collected ?
Well Casing	Boart Longyear ASTM F480-88A PVC	Global Well Supplies	No
Well Screen 2"X 10'	Boart Longyear ASTM F480-88A PVC	Global Well Supplies	No
End Cap	Boart Longyear	Global Well Supplies	No
Drilling Fluid	Potable water	Bldg. #3245 distribution system	Yes
Drilling Fluid Additives	Not used	NA	NA
Backfill Material			
Annular Filter Pack	Global NSF Qtz Sand SEP/18 B	Global Well Supplies	No
Bentonite Seal	CETCO, Pure Gold Med. Chips NSF	Global Well Supplies	No
Annular Grout	Portland Cement & Baroid Bentonite	Global Well Supplies	No
Surface Cement	Concrete Mix Pak Mix	Global Well Supplies	No
Protective Casing	Prepainted	Global Well Supplies	No
Paint	NA	NA	NA
Rod Lubricant	Jet Lube, Inc. – Well Guard	Global Well Supplies	No
Compressor Oil	-	-	-

To the best of my knowledge, I certify that the above described materials were used during installation of this monitoring well.

Signature of Site Geologist: Fred A Ramser

Tetra Tech NUS. Inc.
CERTIFICATE OF CONFORMANCE

Well Designation: 16MWT16
Site Name: SWMU 16 CAST HIGH
Date Installed: 11/09/03
Project Name: NSWC CRANE

Site Geologist: MATT COCHRAN
Drilling Company: Bowser Morner
Driller: J. WALSH
Project Number: 9060 CTO 279

Material	Brand/Description	Source/Supplier	Sample Collected ?
Well Casing	Boart Longyear ASTM F480-88A PVC	Global Well Supplies	No
Well Screen 2"X 10'	Boart Longyear ASTM F480-88A PVC	Global Well Supplies	No
End Cap	Boart Longyear	Global Well Supplies	No
Drilling Fluid	Potable water	Bldg. #3245 distribution system	Yes
Drilling Fluid Additives	Not used	NA	NA
Backfill Material			
Annular Filter Pack	Global NSF Qtz Sand SEP/18 B	Global Well Supplies	No
Bentonite Seal	CETCO, Pure Gold Med. Chips NSF	Global Well Supplies	No
Annular Grout	Portland Cement & Baroid Bentonite	Global Well Supplies	No
Surface Cement	Concrete Mix Pak Mix	Global Well Supplies	No
Protective Casing	Prepainted	Global Well Supplies	No
Paint	NA	NA	NA
Rod Lubricant	Jet Lube, Inc. – Well Guard	Global Well Supplies	No
Compressor Oil	-	-	-

To the best of my knowledge, I certify that the above described materials were used during installation of this monitoring well.

Signature of Site Geologist: [illegible] FOR MATT C.

Tetra Tech NUS. Inc.
CERTIFICATE OF CONFORMANCE

Well Designation: 16MWT17
Site Name: SWMU 16 CAST HIGH
Date Installed: 11/08/03
Project Name: NSWC CRANE

Site Geologist: MATT COCHRAN
Drilling Company: Bowser Morner
Driller: J. WALSH
Project Number: 9060 CTO 279

Material	Brand/Description	Source/Supplier	Sample Collected ?
Well Casing	Boart Longyear ASTM F480-88A PVC	Global Well Supplies	No
Well Screen 2"X 10'	Boart Longyear ASTM F480-88A PVC	Global Well Supplies	No
End Cap	Boart Longyear	Global Well Supplies	No
Drilling Fluid	Potable water	Bldg. #3245 distribution system	Yes
Drilling Fluid Additives	Not used	NA	NA
Backfill Material			
Annular Filter Pack	Global NSF Qtz Sand SEP/18 B	Global Well Supplies	No
Bentonite Seal	CETCO, Pure Gold Med. Chips NSF	Global Well Supplies	No
Annular Grout	Portland Cement & Baroid Bentonite	Global Well Supplies	No
Surface Cement	Concrete Mix Pak Mix	Global Well Supplies	No
Protective Casing	Prepainted	Global Well Supplies	No
Paint	NA	NA	NA
Rod Lubricant	Jet Lube, Inc. – Well Guard	Global Well Supplies	No
Compressor Oil	-	-	-

To the best of my knowledge, I certify that the above described materials were used during installation of this monitoring well.

Signature of Site Geologist: Fred Ullauser for Matt C.

Tetra Tech NUS. Inc.
CERTIFICATE OF CONFORMANCE

Well Designation: 16MWT18
Site Name: SWMU 16 CAST HIGH
Date Installed: 01/18/04
Project Name: NSWC CRANE

Site Geologist: FRED RAMSER
Drilling Company: Bowser Morner
Driller: JOE McCLOUD
Project Number: 9060 CTO 279

Material	Brand/Description	Source/Supplier	Sample Collected ?
Well Casing	Boart Longyear ASTM F480-88A PVC	Global Well Supplies	No
Well Screen 2"X 10'	Boart Longyear ASTM F480-88A PVC	Global Well Supplies	No
End Cap	Boart Longyear	Global Well Supplies	No
Drilling Fluid	Potable water	Bldg. #3245 distribution system	Yes
Drilling Fluid Additives	Not used	NA	NA
Backfill Material			
Annular Filter Pack	Global NSF Qtz Sand SEP/18 B	Global Well Supplies	No
Bentonite Seal	CETCO, Pure Gold Med. Chips NSF	Global Well Supplies	No
Annular Grout	Portland Cement & Baroid Bentonite	Global Well Supplies	No
Surface Cement	Concrete Mix Pak Mix	Global Well Supplies	No
Protective Casing	Prepainted	Global Well Supplies	No
Paint	NA	NA	NA
Rod Lubricant	Jet Lube, Inc. – Well Guard	Global Well Supplies	No
Compressor Oil	-	-	-

To the best of my knowledge, I certify that the above described materials were used during installation of this monitoring well.

Signature of Site Geologist: Fred Ramser

APPENDIX C
SAMPLE LOG SHEETS AND OTHER FIELD FORMS

APPENDIX C.1.1
SWMU 13 SOIL AND SEDIMENT SAMPLE LOG SHEETS
ROUND 1

Tetra Tech NUS, Inc.

SOIL SAMPLE LOG SHEET

Project Site Name: NSWC CRANE
Project No.: N9060 CTO 0279

[X] Surface Soil
[] Subsurface Soil
[] Sediment
[] Other:
[] QA Sample Type:

Sample ID No.: 13SS 01 0002
Sample Location: 13SB 01
Sampled By: M.Cochran / T. Rojahn
C.O.C. No.: 0963 & 0965

Type of Sample:
[X] Low Concentration
[] High Concentration

GRAB SAMPLE DATA:

	Depth	Color	Description (Sand, Silt, Clay, Moisture, etc.)
Date: 3-25-03 Time: 1240 Method: DPT Monitor Reading (ppm): 3.6	0 - 2'	GREY BRN	SANDY SILT, MOIST

COMPOSITE SAMPLE DATA:

Date:	Time	Depth	Color	Description (Sand, Silt, Clay, Moisture, etc.)
Method:				
Monitor Readings (Range in ppm):				

SAMPLE COLLECTION INFORMATION:

Analysis	Container Requirements	Collected	Other
VOCs (8260B)	(3) Encore Samplers	Yes/ No	
VOCs (8015B)	(2) Encore Samplers	Yes/ No	
SVOCs (8270C, SIM & 8151A) & PCBs (8082)	(2) 8oz. Glass Jars	Yes/ No	
TOC, CEC & pH	(2) 8oz. Glass Jars	Yes/ No	
Dioxins/Furans	(1) _oz. Glass Jars	Yes/ No	

OBSERVATIONS / NOTES:

Soil Group No. PS-3

MAP:

See Revised Figure 3-2

Circle if Applicable:

MS/MSD	Duplicate ID No.:
—	—

Signature(s): MC

Tetra Tech NUS, Inc.

SOIL SAMPLE LOG SHEET

Project Site Name: NSWC CRANE
Project No.: N9060 CTO 0279

[] Surface Soil
[X] Subsurface Soil
[] Sediment
[] Other:
[] QA Sample Type:

Sample ID No.: 13SB 010204
Sample Location: 13SB 01
Sampled By: M. Cochran / T. Rojahn
C.O.C. No.: 09638 0965

Type of Sample:
[X] Low Concentration
[] High Concentration

GRAB SAMPLE DATA:

	Depth	Color	Description (Sand, Silt, Clay, Moisture, etc.)
Date: 3-25-03 Time: 1245 Method: DPT Monitor Reading (ppm): 3.6	2-4'	GREY-BRN	SANDY SILT, DAMP

COMPOSITE SAMPLE DATA:

	Time	Depth	Color	Description (Sand, Silt, Clay, Moisture, etc.)
Date:				
Method:				
Monitor Readings (Range in ppm):				

SAMPLE COLLECTION INFORMATION:

Analysis	Container Requirements	Collected	Other
VOCs (8260B)	(3) Encore Samplers	Yes/ No	
VOCs (8015B)	(2) Encore Samplers	Yes/ No	
SVOCs (8270C, SIM & 8151A) & PCBs (8082)	(2) 8oz. Glass Jars	Yes/ No	
TOC, CEC & pH	(2) 8oz. Glass Jars	Yes/ No	
Dioxins/Furans	(1) _oz. Glass Jars	Yes/ No	

OBSERVATIONS / NOTES:

Soil Group No. PBL-8

MAP:

See Revised Figure 3-2

Circle if Applicable:

MS/MSD

Duplicate ID No.:

Signature(s):

Tetra Tech NUS, Inc.

SOIL SAMPLE LOG SHEET

Project Site Name: NSWC CRANE
Project No.: N9060 CTO 0279

[X] Surface Soil
[] Subsurface Soil
[] Sediment
[] Other:
[] QA Sample Type:

Sample ID No.: 13SS 02 0002
Sample Location: 13SB 02
Sampled By: M.Cochran / T. Rojahn
C.O.C. No.: 0963 & 0965

Type of Sample:
[X] Low Concentration
[] High Concentration

GRAB SAMPLE DATA:

	Depth	Color	Description (Sand, Silt, Clay, Moisture, etc.)
Date: 3-25-03 Time: 1255 Method: DPT Monitor Reading (ppm): 2.1	0 - 2'	GREY BROWN	SANDY SILT, MOIST

COMPOSITE SAMPLE DATA:

	Time	Depth	Color	Description (Sand, Silt, Clay, Moisture, etc.)
Date:				
Method:				
Monitor Readings (Range in ppm):				

SAMPLE COLLECTION INFORMATION:

Analysis	Container Requirements	Collected	Other
VOCs (8260B)	(3) Encore Samplers	Yes/ No	
VOCs (8015B)	(2) Encore Samplers	Yes/ No	
SVOCs (8270C, SIM & 8151A) & PCBs (8082)	(2) 8oz. Glass Jars	(Yes) No	
TOC, CEC & pH	(2) 8oz. Glass Jars	Yes/ No	
Dioxins/Furans	(1) _oz. Glass Jars	(Yes) No	

OBSERVATIONS / NOTES:

Soil Group No. PS-3

MAP:

See Revised Figure 3-2

Circle if Applicable:

MS/MSD —

Duplicate ID No.: —

Signature(s):

Tetra Tech NUS, Inc.

SOIL SAMPLE LOG SHEET

Project Site Name: NSWC CRANE
Project No.: N9060 CTO 0279

[] Surface Soil
[X] Subsurface Soil
[] Sediment
[] Other:
[] QA Sample Type:

Sample ID No.: 13SB 020204
Sample Location: 13SB 02
Sampled By: M. Cochran / T. Rojahn
C.O.C. No.: 0963 & 0965

Type of Sample:
[X] Low Concentration
[] High Concentration

GRAB SAMPLE DATA:

	Depth	Color	Description (Sand, Silt, Clay, Moisture, etc.)
Date: 3-25-03 Time: 1300 Method: DPT Monitor Reading (ppm): 2.1	2-4'	GREY BROWN	DAMP SANDY SILT

COMPOSITE SAMPLE DATA:

	Time	Depth	Color	Description (Sand, Silt, Clay, Moisture, etc.)
Date:				
Method:				
Monitor Readings (Range in ppm):				

SAMPLE COLLECTION INFORMATION:

Analysis	Container Requirements	Collected	Other
VOCs (8260B)	(3) Encore Samplers	Yes/ No	
VOCs (8015B)	(2) Encore Samplers	Yes/ No	
SVOCs (8270C, SIM & 8151A) & PCBs (8082)	(2) 8oz. Glass Jars	Yes/ No	
TOC, CEC & pH	(2) 8oz. Glass Jars	Yes/ No	
Dioxins/Furans	(1) _oz. Glass Jars	Yes/ No	

OBSERVATIONS / NOTES:

Soil Group No. PBL-8

MAP:

See Revised Figure 3-2

Circle if Applicable:

MS/MSD —

Duplicate ID No.: —

Signature(s):

Tetra Tech NUS, Inc.

SOIL SAMPLE LOG SHEET

Project Site Name: NSWC CRANE
Project No.: N9060 CTO 0279

[X] Surface Soil
[] Subsurface Soil
[] Sediment
[] Other:
[] QA Sample Type:

Sample ID No.: 13SS 03 0002
Sample Location: 13SB 03
Sampled By: M.Cochran / T. Rojahn
C.O.C. No.: 0963 & 0965

Type of Sample:
[X] Low Concentration
[] High Concentration

GRAB SAMPLE DATA:

	Depth	Color	Description (Sand, Silt, Clay, Moisture, etc.)
Date: 3-25-03 Time: 1310 Method: DPT Monitor Reading (ppm): 1.8	0 - 2'	GREY BROWN	SANDY SILT MOIST

COMPOSITE SAMPLE DATA:

	Time	Depth	Color	Description (Sand, Silt, Clay, Moisture, etc.)
Date:				
Method:				
Monitor Readings (Range in ppm):				

SAMPLE COLLECTION INFORMATION:

Analysis	Container Requirements	Collected	Other
VOCs (8260B)	(3) Encore Samplers	Yes/ No	
VOCs (8015B)	(2) Encore Samplers	Yes/ No	
SVOCs (8270C, SIM & 8151A) & PCBs (8082)	(2) 8oz. Glass Jars	Yes/ No	
TOC, CEC & pH	(2) 8oz. Glass Jars	Yes/ No	
Dioxins/Furans	(1) _oz. Glass Jars	Yes/ No	

OBSERVATIONS / NOTES:

Soil Group No. PS-3

MAP:

See Revised Figure 3-2

Circle if Applicable:

MS/MSD —

Duplicate ID No.: —

Signature(s):

Tetra Tech NUS, Inc.

SOIL SAMPLE LOG SHEET

Project Site Name: NSWC CRANE
Project No.: N9060 CTO 0279

[] Surface Soil
[X] Subsurface Soil
[] Sediment
[] Other:
[] QA Sample Type:

Sample ID No.: 13SB 030204
Sample Location: 13SB 03
Sampled By: M. Cochran / T. Rojahn
C.O.C. No.: 0963 & 0965

Type of Sample:
[X] Low Concentration
[] High Concentration

GRAB SAMPLE DATA:

	Depth	Color	Description (Sand, Silt, Clay, Moisture, etc.)
Date: 3-25-03 Time: 1315 Method: DPT Monitor Reading (ppm): 1.8	2-4'	GREY BROWN	SANDY SILT, DAMP

COMPOSITE SAMPLE DATA:

	Time	Depth	Color	Description (Sand, Silt, Clay, Moisture, etc.)
Date:				
Method:				
Monitor Readings (Range in ppm):				

SAMPLE COLLECTION INFORMATION:

Analysis	Container Requirements	Collected	Other
VOCs (8260B)	(3) Encore Samplers	Yes/ No	
VOCs (8015B)	(2) Encore Samplers	Yes/ No	
SVOCs (8270C, SIM & 8151A) & PCBs (8082)	(2) 8oz. Glass Jars	Yes/ No	
TOC, CEC & pH	(2) 8oz. Glass Jars	Yes/ No	
Dioxins/Furans	(1) _oz. Glass Jars	Yes/ No	

OBSERVATIONS / NOTES:

Soil Group No. PBL-8

MAP:

See Revised Figure 3-2

Circle if Applicable:

MS/MSD

Duplicate ID No.:

Signature(s):

Tetra Tech NUS, Inc.

SOIL SAMPLE LOG SHEET

Project Site Name: NSWC CRANE
Project No.: N9060 CTO 0279

[X] Surface Soil
[] Subsurface Soil
[] Sediment
[] Other:
[] QA Sample Type:

Sample ID No.: 13SS 04 0002
Sample Location: 13SB 04
Sampled By: M.Cochran / T. Rojahn
C.O.C. No.: 0963 & 0965

Type of Sample:
[X] Low Concentration
[] High Concentration

GRAB SAMPLE DATA:

	Depth	Color	Description (Sand, Silt, Clay, Moisture, etc.)
Date: 3-25-03 Time: 1415 Method: DPT Monitor Reading (ppm): 2.2	0 - 2'	GREY BROWN	SANDY SILT, MOIST

COMPOSITE SAMPLE DATA:

	Time	Depth	Color	Description (Sand, Silt, Clay, Moisture, etc.)
Date:				
Method:				
Monitor Readings (Range in ppm):				

SAMPLE COLLECTION INFORMATION:

Analysis	Container Requirements	Collected	Other
VOCs (8260B)	(3) Encore Samplers	Yes/ No	
VOCs (8015B)	(2) Encore Samplers	Yes/ No	
SVOCs (8270C, SIM & 8151A) & PCBs (8082)	(2) 8oz. Glass Jars X 3	Yes/ No	
TOC, CEC & pH	(2) 8oz. Glass Jars	Yes/ No	
Dioxins/Furans	(1) _oz. Glass Jars X 3	Yes/ No	

OBSERVATIONS / NOTES:

Soil Group No. PS-3

MAP:

See Revised Figure 3-2

Circle if Applicable:

MS/MSD

Duplicate ID No.: FD 0325 0301

Signature(s):

Tetra Tech NUS, Inc.

SOIL SAMPLE LOG SHEET

Project Site Name: NSWC CRANE
Project No.: N9060 CTO 0279

[] Surface Soil
[X] Subsurface Soil
[] Sediment
[] Other:
[] QA Sample Type:

Sample ID No.: 13SB 040204
Sample Location: 13SB 04
Sampled By: M. Cochran / T. Rojahn
C.O.C. No.: 0963 & 0965

Type of Sample:
[X] Low Concentration
[] High Concentration

GRAB SAMPLE DATA:

	Depth	Color	Description (Sand, Silt, Clay, Moisture, etc.)
Date: 3-25-03 Time: 1420 Method: DPT Monitor Reading (ppm): 2.2	2-4'	GREY BROWN	SANDY SILT, DAMP

COMPOSITE SAMPLE DATA:

	Time	Depth	Color	Description (Sand, Silt, Clay, Moisture, etc.)
Date:				
Method:				
Monitor Readings (Range in ppm):				

SAMPLE COLLECTION INFORMATION:

Analysis	Container Requirements	Collected	Other
VOCs (8260B)	(3) Encore Samplers	Yes/ No	
VOCs (8015B)	(2) Encore Samplers	Yes/ No	
SVOCs (8270C, SIM & 8151A) & PCBs (8082)	(2) 8oz. Glass Jars	Yes/ No	
TOC, CEC & pH	(2) 8oz. Glass Jars	Yes/ No	
Dioxins/Furans	(1) _oz. Glass Jars	Yes/ No	

OBSERVATIONS / NOTES:

Soil Group No. PBL-8

MAP:

See Revised Figure 3-2

Circle if Applicable:

MS/MSD —

Duplicate ID No.: —

Signature(s):

Tetra Tech NUS, Inc.

SOIL SAMPLE LOG SHEET

Project Site Name: NSWC CRANE
Project No.: N9060 CTO 0279

[X] Surface Soil
[] Subsurface Soil
[] Sediment
[] Other:
[] QA Sample Type:

Sample ID No.: 13SS 05 0002
Sample Location: 13SB 05
Sampled By: M.Cochran / T. Rojahn
C.O.C. No.: 0963 & 0965

Type of Sample:
[X] Low Concentration
[] High Concentration

GRAB SAMPLE DATA:

	Depth	Color	Description (Sand, Silt, Clay, Moisture, etc.)
Date: 3-25-03 Time: 1350 Method: DPT Monitor Reading (ppm): 1.8	0 - 2'	GREY BROWN	SANDY SILT. SATURATED

COMPOSITE SAMPLE DATA:

Date:	Time	Depth	Color	Description (Sand, Silt, Clay, Moisture, etc.)
Method:				
Monitor Readings (Range in ppm):				

SAMPLE COLLECTION INFORMATION:

Analysis	Container Requirements	Collected	Other
VOCs (8260B)	(3) Encore Samplers	Yes/ No	
VOCs (8015B)	(2) Encore Samplers	Yes/ No	
SVOCs (8270C, SIM & 8151A) & PCBs (8082)	(1) ~~(2)~~ 8oz. Glass Jars	Yes/ No	
TOC, CEC & pH	(2) 8oz. Glass Jars	Yes/ No	
Dioxins/Furans	(1) _oz. Glass Jars	Yes/ No	

OBSERVATIONS / NOTES:

Soil Group No. PS-3

MAP:

See Revised Figure 3-2

Circle if Applicable:

MS/MSD

Duplicate ID No.:

Signature(s):

Tetra Tech NUS, Inc.

SOIL SAMPLE LOG SHEET

Project Site Name: NSWC CRANE
Project No.: N9060 CTO 0279

[] Surface Soil
[X] Subsurface Soil
[] Sediment
[] Other:
[] QA Sample Type:

Sample ID No.: 13SB 050204
Sample Location: 13SB 05
Sampled By: M. Cochran / T. Rojahn
C.O.C. No.: 0963 & 0965

Type of Sample:
[X] Low Concentration
[] High Concentration

GRAB SAMPLE DATA:

	Depth	Color	Description (Sand, Silt, Clay, Moisture, etc.)
Date: 3-25-03 Time: 1355 Method: DPT Monitor Reading (ppm): 1.8	2-4'	GREY BROWN	SANDY SILT, DAMP

COMPOSITE SAMPLE DATA:

Date:	Time	Depth	Color	Description (Sand, Silt, Clay, Moisture, etc.)
Method:				
Monitor Readings (Range in ppm):				

SAMPLE COLLECTION INFORMATION:

Analysis	Container Requirements	Collected	Other
VOCs (8260B)	(3) Encore Samplers	Yes/ No	
VOCs (8015B)	(2) Encore Samplers	Yes/ No	
SVOCs (8270C, SIM & 8151A) & PCBs (8082)	1 ~~(2)~~ 8oz. Glass Jars	Yes/ No	
TOC, CEC & pH	(2) 8oz. Glass Jars	Yes/ No	
Dioxins/Furans	(1) _oz. Glass Jars	Yes/ No	

OBSERVATIONS / NOTES:

Soil Group No. PBL-8

MAP:

See Revised Figure 3-2

Circle if Applicable:

MS/MSD

Duplicate ID No.:

Signature(s):

Tetra Tech NUS, Inc.

SOIL SAMPLE LOG SHEET

Project Site Name: NSWC CRANE
Project No.: N9060 CTO 0279

[X] Surface Soil
[] Subsurface Soil
[] Sediment
[] Other:
[] QA Sample Type:

Sample ID No.: 13SS 06 0002
Sample Location: 13SB 06
Sampled By: M.Cochran / T. Rojahn
C.O.C. No.: 0963 20965

Type of Sample:
[X] Low Concentration
[] High Concentration

GRAB SAMPLE DATA:

	Depth	Color	Description (Sand, Silt, Clay, Moisture, etc.)
Date: 3-25-03 Time: 1330 Method: DPT Monitor Reading (ppm): 1.8	0 - 2'	GREY BROWN	SILTY SAND, MOIST

COMPOSITE SAMPLE DATA:

Date:	Time	Depth	Color	Description (Sand, Silt, Clay, Moisture, etc.)
Method:				
Monitor Readings (Range in ppm):				

SAMPLE COLLECTION INFORMATION:

Analysis	Container Requirements	Collected	Other
VOCs (8260B)	(3) Encore Samplers	Yes/ No	
VOCs (8015B)	(2) Encore Samplers	Yes/ No	
SVOCs (8270C, SIM & 8151A) & PCBs (8082)	(2) 8oz. Glass Jars	Yes/ No	
TOC, CEC & pH	(2) 8oz. Glass Jars	Yes/ No	
Dioxins/Furans	(1) _oz. Glass Jars	Yes/ No	

OBSERVATIONS / NOTES:

Soil Group No. PS-3

MAP:

See Revised Figure 3-2

Circle if Applicable:

MS/MSD

Duplicate ID No.:

Signature(s):

Tetra Tech NUS, Inc.

SOIL SAMPLE LOG SHEET

Project Site Name: NSWC CRANE
Project No.: N9060 CTO 0279

[] Surface Soil
[X] Subsurface Soil
[] Sediment
[] Other:
[] QA Sample Type:

Sample ID No.: 13SB 060204
Sample Location: 13SB 06
Sampled By: M. Cochran / T. Rojahn
C.O.C. No.: 0963 & 0965

Type of Sample:
[X] Low Concentration
[] High Concentration

GRAB SAMPLE DATA:

	Depth	Color	Description (Sand, Silt, Clay, Moisture, etc.)
Date: 3-25-03 Time: 1335 Method: DPT Monitor Reading (ppm): 1.8	2-4'	GREY BROWN	SILTY SAND, DAMP

COMPOSITE SAMPLE DATA:

Date:	Time	Depth	Color	Description (Sand, Silt, Clay, Moisture, etc.)
Method:				
Monitor Readings (Range in ppm):				

SAMPLE COLLECTION INFORMATION:

Analysis	Container Requirements	Collected	Other
VOCs (8260B)	(3) Encore Samplers	(Yes) No	
VOCs (8015B)	(2) Encore Samplers	(Yes) No	
SVOCs (8270C, SIM & 8151A) & PCBs (8082)	(2) 8oz. Glass Jars	(Yes) No	
TOC, CEC & pH	(2) 8oz. Glass Jars	Yes/ No	
Dioxins/Furans	(1) _oz. Glass Jars	(Yes) No	

OBSERVATIONS / NOTES:

Soil Group No. PBS-9

MAP:

See Revised Figure 3-2

Circle if Applicable:

MS/MSD —

Duplicate ID No.: —

Signature(s):

Tetra Tech NUS, Inc.

SOIL SAMPLE LOG SHEET

Project Site Name: NSWC CRANE
Project No.: N9060 CTO 0279

[X] Surface Soil
[] Subsurface Soil
[] Sediment
[] Other:
[] QA Sample Type:

Sample ID No.: 13SS 07 0002
Sample Location: 13SB 07
Sampled By: M.Cochran / T. Rojahn / B. Dawson
C.O.C. No.: 0968

Type of Sample:
[X] Low Concentration
[] High Concentration

GRAB SAMPLE DATA:

	Depth	Color	Description (Sand, Silt, Clay, Moisture, etc.)
Date: 3/26/03 Time: 1320 Method: DPT Monitor Reading (ppm): 0.0	0 - 2'	DARK BROWN	SILTY SAND

COMPOSITE SAMPLE DATA:

	Time	Depth	Color	Description (Sand, Silt, Clay, Moisture, etc.)
Date:				
Method:				
Monitor Readings (Range in ppm):				

SAMPLE COLLECTION INFORMATION:

Analysis	Container Requirements	Collected	Other
VOCs (8260B)	(3) Encore Samplers	Yes/No	
VOCs (8015B)	(2) Encore Samplers	Yes/No	
SVOCs (8270C, SIM & 8151A) & PCBs (8082)	(2) 8oz. Glass Jars	Yes/No	
TOC, CEC & pH	(2) 8oz. Glass Jars	Yes/No	
Dioxins/Furans	(1) _oz. Glass Jars	Yes/No	

OBSERVATIONS / NOTES:

Soil Group No. PS-3

MAP:

See Revised Figure 3-2

Circle if Applicable:

MS/MSD —

Duplicate ID No.: —

Signature(s): Robert Belkner

Tetra Tech NUS, Inc.

SOIL SAMPLE LOG SHEET

Project Site Name: NSWC CRANE
Project No.: N9060 CTO 0279

[] Surface Soil
[X] Subsurface Soil
[] Sediment
[] Other:
[] QA Sample Type:

Sample ID No.: 13SB 070810
Sample Location: 13SB 07
Sampled By: M. Cochran / T. Rojahn / B Baikovic
C.O.C. No.: 0968

Type of Sample:
[X] Low Concentration
[] High Concentration

GRAB SAMPLE DATA:

	Depth	Color	Description (Sand, Silt, Clay, Moisture, etc.)
Date: 3/26/03 Time: 1330 Method: DPT Monitor Reading (ppm): 0.0	8'-10'	RED BROWN	SILT

COMPOSITE SAMPLE DATA:

Date:	Time	Depth	Color	Description (Sand, Silt, Clay, Moisture, etc.)
Method:				
Monitor Readings (Range in ppm):				

SAMPLE COLLECTION INFORMATION:

Analysis	Container Requirements	Collected	Other
VOCs (8260B)	(3) Encore Samplers	Yes/No	
VOCs (8015B)	(2) Encore Samplers	Yes/No	
SVOCs (8270C, SIM & 8151A) & PCBs (8082)	(2) 8oz. Glass Jars	Yes/No	
TOC, CEC & pH	(2) 8oz. Glass Jars	Yes/ No	
Dioxins/Furans	(1) _oz. Glass Jars	Yes/No	

OBSERVATIONS / NOTES:

Soil Group No. PBL-8

MAP:

See Revised Figure 3-2

Circle if Applicable:

MS/MSD

Duplicate ID No.:

Signature(s):

Robert Bailkovic

Tetra Tech NUS, Inc.

SOIL SAMPLE LOG SHEET

Project Site Name: NSWC CRANE
Project No.: N9060 CTO 0279

[X] Surface Soil
[] Subsurface Soil
[] Sediment
[] Other:
[] QA Sample Type:

Sample ID No.: 13SS 08 0002
Sample Location: 13SB 08
Sampled By: M.Cochran / T. Rojahn / B Barkowe
C.O.C. No.: 0979

Type of Sample:
[X] Low Concentration
[] High Concentration

GRAB SAMPLE DATA:

	Depth	Color	Description (Sand, Silt, Clay, Moisture, etc.)
Date: 3/30/03 Time: 0745 Method: ~~BPT~~ PotoSonic Monitor Reading (ppm): 0.0	0 - 2'	YELLOW OR	CLAYEY SILT

COMPOSITE SAMPLE DATA:

	Time	Depth	Color	Description (Sand, Silt, Clay, Moisture, etc.)
Date:				
Method:				
Monitor Readings (Range in ppm):				

SAMPLE COLLECTION INFORMATION:

Analysis	Container Requirements	Collected	Other
VOCs (8260B)	(3) Encore Samplers	Yes/No	
VOCs (8015B)	(2) Encore Samplers	Yes/No	
SVOCs (8270C, SIM & 8151A) & PCBs (8082)	(2) 8oz. Glass Jars	Yes/No	
TOC, CEC & pH	(4) ~~(2)~~ 8oz. Glass Jars	Yes/No	
Dioxins/Furans	(1) _oz. Glass Jars	Yes/No	

OBSERVATIONS / NOTES:

Soil Group No. PS-3

MAP:

See Revised Figure 3-2

Circle if Applicable:

MS/MSD —

Duplicate ID No.: FD03300304

Signature(s): Robert Balkwe

Tetra Tech NUS, Inc.

SOIL SAMPLE LOG SHEET

Project Site Name: NSWC CRANE
Project No.: N9060 CTO 0279

[] Surface Soil
[X] Subsurface Soil
[] Sediment
[] Other:
[] QA Sample Type:

Sample ID No.: 13SB080608
Sample Location: 13SB08
Sampled By: M. Cochran / T. Rojahn / B. Balkcom
C.O.C. No.: 0979

Type of Sample:
[X] Low Concentration
[] High Concentration

GRAB SAMPLE DATA:

	Depth	Color	Description (Sand, Silt, Clay, Moisture, etc.)
Date: 3/30/03 Time: 0800 Method: ~~DPT~~ Rotosonic Monitor Reading (ppm): 0.0	6-8'	YELLOW LT. GRAY	CLAYEY SILT (MOTTLED)

COMPOSITE SAMPLE DATA:

Date:	Time	Depth	Color	Description (Sand, Silt, Clay, Moisture, etc.)
Method:				
Monitor Readings (Range in ppm):				

SAMPLE COLLECTION INFORMATION:

Analysis	Container Requirements	Collected	Other
VOCs (8260B)	(3) Encore Samplers	Yes/ No	
VOCs (8015B)	(2) Encore Samplers	Yes/ No	
SVOCs (8270C, SIM & 8151A) & PCBs (8082)	(2) 8oz. Glass Jars	Yes/ No	
TOC, CEC & pH	(4) ~~(2)~~ 8oz. Glass Jars	Yes/ No	
Dioxins/Furans	(1) _oz. Glass Jars	Yes/ No	

OBSERVATIONS / NOTES:

Soil Group No. PBL-8

MAP:

See Revised Figure 3-2

Circle if Applicable:

MS/MSD

Duplicate ID No.:

Signature(s): Robert Balkcom

Tetra Tech NUS, Inc.

SOIL SAMPLE LOG SHEET

Project Site Name: NSWC CRANE
Project No.: N9060 CTO 0279

[X] Surface Soil
[] Subsurface Soil
[] Sediment
[] Other:
[] QA Sample Type:

Sample ID No.: 13SS 09 0002
Sample Location: 13SB 09
Sampled By: M.Cochran / T. Rojahn
C.O.C. No.: 968 & 0966

Type of Sample:
[X] Low Concentration
[] High Concentration

GRAB SAMPLE DATA:

	Depth	Color	Description (Sand, Silt, Clay, Moisture, etc.)
Date: 3-26-03	0 - 2'	BLACK	COMPOST / MANURE MOIST
Time: 945		BROWN	SILTY SAND DAMP
Method: DPT			
Monitor Reading (ppm): 2.1			

COMPOSITE SAMPLE DATA:

Date:	Time	Depth	Color	Description (Sand, Silt, Clay, Moisture, etc.)
Method:				
Monitor Readings (Range in ppm):				

SAMPLE COLLECTION INFORMATION:

Analysis	Container Requirements	Collected	Other
VOCs (8260B)	(3) Encore Samplers	Yes/ No	
VOCs (8015B)	(2) Encore Samplers	Yes/ No	
SVOCs (8270C, SIM & 8151A) & PCBs (8082)	4 ~~(2)~~ 8oz. Glass Jars	Yes/ No	
TOC, CEC & pH	(2) 8oz. Glass Jars	Yes/ No	
Dioxins/Furans	2 ~~(1)~~ oz. Glass Jars	Yes/ No	

OBSERVATIONS / NOTES:

Soil Group No. PS-3

MAP:

See Revised Figure 3-2

Circle if Applicable:

MS/MSD	Duplicate ID No.:
—	FD03260301

Signature(s):

Tetra Tech NUS, Inc.

SOIL SAMPLE LOG SHEET

Project Site Name: NSWC CRANE
Project No.: N9060 CTO 0279

[] Surface Soil
[X] Subsurface Soil
[] Sediment
[] Other:
[] QA Sample Type:

Sample ID No.: 13SB 09 0204
Sample Location: 13SB 09
Sampled By: M. Cochran / T. Rojahn
C.O.C. No.: 968 E0966

Type of Sample:
[X] Low Concentration
[] High Concentration

GRAB SAMPLE DATA:

	Depth	Color	Description (Sand, Silt, Clay, Moisture, etc.)
Date: 3-26-03 Time: 9.50 Method: DPT Monitor Reading (ppm): 2.1	2-4	BROWN	SILTY SAND

COMPOSITE SAMPLE DATA:

	Time	Depth	Color	Description (Sand, Silt, Clay, Moisture, etc.)
Date:				
Method:				
Monitor Readings (Range in ppm):				

SAMPLE COLLECTION INFORMATION:

Analysis	Container Requirements	Collected	Other
VOCs (8260B)	(3) Encore Samplers	Yes/ No	
VOCs (8015B)	(2) Encore Samplers	Yes/ No	
SVOCs (8270C, SIM & 8151A) & PCBs (8082)	1 ~~(2)~~ 8oz. Glass Jars	Yes/ No	
TOC, CEC & pH	(2) 8oz. Glass Jars	Yes/ No	
Dioxins/Furans	(1) _oz. Glass Jars	Yes/ No	

OBSERVATIONS / NOTES:

Soil Group No. PBS-9

MAP:

See Revised Figure 3-2

Circle if Applicable:

MS/MSD —

Duplicate ID No.: —

Signature(s):

Tetra Tech NUS, Inc.

SOIL SAMPLE LOG SHEET

Project Site Name: NSWC CRANE
Project No.: N9060 CTO 0279

[X] Surface Soil
[] Subsurface Soil
[] Sediment
[] Other:
[] QA Sample Type:

Sample ID No.: 13SS 10 0002
Sample Location: 13SB 10
Sampled By: M.Cochran / T. Rojahn
C.O.C. No.: 0968 & 0966

Type of Sample:
[X] Low Concentration
[] High Concentration

GRAB SAMPLE DATA:

	Depth	Color	Description (Sand, Silt, Clay, Moisture, etc.)
Date: 3-26-03 Time: 9 30 Method: DPT Monitor Reading (ppm): 1.9	0 - 2'	BROWN	SANDY SILT, MOIST

COMPOSITE SAMPLE DATA:

Date:	Time	Depth	Color	Description (Sand, Silt, Clay, Moisture, etc.)
Method:				
Monitor Readings (Range in ppm):				

SAMPLE COLLECTION INFORMATION:

Analysis	Container Requirements	Collected	Other
VOCs (8260B)	(3) Encore Samplers	Yes/ No	
VOCs (8015B)	(2) Encore Samplers	Yes/ No	
SVOCs (8270C, SIM & 8151A) & PCBs (8082)	(2) 8oz. Glass Jars	Yes/ No	
TOC, CEC & pH	(2) 8oz. Glass Jars	Yes/ No	
Dioxins/Furans	(1) _oz. Glass Jars	Yes/ No	

OBSERVATIONS / NOTES:

Soil Group No. PS-3

MAP:

See Revised Figure 3-2

Circle if Applicable:

MS/MSD —

Duplicate ID No.: —

Signature(s):

Tetra Tech NUS, Inc.

SOIL SAMPLE LOG SHEET

Project Site Name: NSWC CRANE
Project No.: N9060 CTO 0279

[] Surface Soil
[X] Subsurface Soil
[] Sediment
[] Other:
[] QA Sample Type:

Sample ID No.: 13SB 100204
Sample Location: 13SB 10
Sampled By: M. Cochran / T. Rojahn
C.O.C. No.: 0968 E0966

Type of Sample:
[X] Low Concentration
[] High Concentration

GRAB SAMPLE DATA:

	Depth	Color	Description (Sand, Silt, Clay, Moisture, etc.)
Date: 3-26-03 Time: 9:35 Method: DPT Monitor Reading (ppm): 1.9	2-4	BROWN	SANDY SILT, DAMP

COMPOSITE SAMPLE DATA:

Date:	Time	Depth	Color	Description (Sand, Silt, Clay, Moisture, etc.)
Method:				
Monitor Readings (Range in ppm):				

SAMPLE COLLECTION INFORMATION:

Analysis	Container Requirements	Collected	Other
VOCs (8260B)	(3) Encore Samplers	Yes/ No	
VOCs (8015B)	(2) Encore Samplers	Yes/ No	
SVOCs (8270C, SIM & 8151A) & PCBs (8082)	(2) 8oz. Glass Jars	Yes/ No	
TOC, CEC & pH	(2) 8oz. Glass Jars	Yes/ No	
Dioxins/Furans	(1) _oz. Glass Jars	Yes/ No	

OBSERVATIONS / NOTES:

Soil Group No. PBL-8

MAP:

See Revised Figure 3-2

Circle if Applicable:

MS/MSD —

Duplicate ID No.: —

Signature(s): Tony Rojahn

Tetra Tech NUS, Inc.

SOIL SAMPLE LOG SHEET

Project Site Name: NSWC CRANE
Project No.: N9060 CTO 0279

[X] Surface Soil
[] Subsurface Soil
[] Sediment
[] Other:
[] QA Sample Type:

Sample ID No.: 13SS 11 0002
Sample Location: 13SB 11
Sampled By: M.Cochran / T. Rojahn
C.O.C. No.: 0968 & 0966

Type of Sample:
[X] Low Concentration
[] High Concentration

GRAB SAMPLE DATA:

	Depth	Color	Description (Sand, Silt, Clay, Moisture, etc.)
Date: 3-26-03 Time: 915 Method: DPT Monitor Reading (ppm): 1.9	0 - 2'	RD-BRN	SILTY SAND, MOIST

COMPOSITE SAMPLE DATA:

	Time	Depth	Color	Description (Sand, Silt, Clay, Moisture, etc.)
Date:				
Method:				
Monitor Readings (Range in ppm):				

SAMPLE COLLECTION INFORMATION:

Analysis	Container Requirements	Collected	Other
VOCs (8260B)	(3) Encore Samplers	Yes/ No	
VOCs (8015B)	(2) Encore Samplers	Yes/ No	
SVOCs (8270C, SIM & 8151A) & PCBs (8082)	(2) 8oz. Glass Jars	Yes/ No	
TOC, CEC & pH	(2) 8oz. Glass Jars	Yes/ No	
Dioxins/Furans	(1) _oz. Glass Jars	Yes/ No	

OBSERVATIONS / NOTES:

Soil Group No. PS-3

MAP:

See Revised Figure 3-2

Circle if Applicable:

MS/MSD —

Duplicate ID No.: —

Signature(s): T. Rojahn

Tetra Tech NUS, Inc.

SOIL SAMPLE LOG SHEET

Project Site Name: NSWC CRANE
Project No.: N9060 CTO 0279

[] Surface Soil
[X] Subsurface Soil
[] Sediment
[] Other:
[] QA Sample Type:

Sample ID No.: 13SB 110204
Sample Location: 13SB 11
Sampled By: M. Cochran / T. Rojahn
C.O.C. No.: 0968 2096

Type of Sample:
[X] Low Concentration
[] High Concentration

GRAB SAMPLE DATA:

	Depth	Color	Description (Sand, Silt, Clay, Moisture, etc.)
Date: 3-26-03 Time: 920 Method: DPT Monitor Reading (ppm): 1.9	2-4'	RD-BRN	SILTY SAND, DAMP

COMPOSITE SAMPLE DATA:

Date:	Time	Depth	Color	Description (Sand, Silt, Clay, Moisture, etc.)
Method:				
Monitor Readings				
(Range in ppm):				

SAMPLE COLLECTION INFORMATION:

Analysis	Container Requirements	Collected	Other
VOCs (8260B)	(3) Encore Samplers	Yes/ No	
VOCs (8015B)	(2) Encore Samplers	Yes/ No	
SVOCs (8270C, SIM & 8151A) & PCBs (8082)	(2) 8oz. Glass Jars	(Yes) No	
TOC, CEC & pH	(2) 8oz. Glass Jars	Yes/ No	
Dioxins/Furans	(1) _oz. Glass Jars	(Yes) No	

OBSERVATIONS / NOTES:

Soil Group No. PBS-9

MAP:

See Revised Figure 3-2

Circle if Applicable:

MS/MSD

Duplicate ID No.: —

Signature(s):

Tetra Tech NUS, Inc.

SOIL SAMPLE LOG SHEET

Project Site Name: NSWC CRANE
Project No.: N9060 CTO 0279

[X] Surface Soil
[] Subsurface Soil
[] Sediment
[] Other:
[] QA Sample Type:

Sample ID No.: 13SS 12 0002
Sample Location: 13SB 12
Sampled By: M.Cochran / T. Rojahn
C.O.C. No.: 968 E0966

Type of Sample:
[X] Low Concentration
[] High Concentration

GRAB SAMPLE DATA:

	Depth	Color	Description (Sand, Silt, Clay, Moisture, etc.)
Date: 3-26-03 Time: 830 Method: DPT Monitor Reading (ppm): 2.1	0 - 2'	BROWN	SANDY SILT, DAMP

COMPOSITE SAMPLE DATA:

	Time	Depth	Color	Description (Sand, Silt, Clay, Moisture, etc.)
Date:				
Method:				
Monitor Readings (Range in ppm):				

SAMPLE COLLECTION INFORMATION:

Analysis	Container Requirements	Collected	Other
VOCs (8260B)	(3) Encore Samplers	Yes/ No	
VOCs (8015B)	(2) Encore Samplers	Yes/ No	
SVOCs (8270C, SIM & 8151A) & PCBs (8082)	(2) 8oz. Glass Jars	Yes/ No	
TOC, CEC & pH	(2) 8oz. Glass Jars	Yes/ No	
Dioxins/Furans	(1) _oz. Glass Jars	Yes/ No	

OBSERVATIONS / NOTES:

Soil Group No. PS-3

MAP:

See Revised Figure 3-2

Circle if Applicable:

MS/MSD —

Duplicate ID No.: —

Signature(s):

Tetra Tech NUS, Inc.

SOIL SAMPLE LOG SHEET

Project Site Name: NSWC CRANE
Project No.: N9060 CTO 0279

[] Surface Soil
[X] Subsurface Soil
[] Sediment
[] Other:
[] QA Sample Type:

Sample ID No.: 13SB 12 0204
Sample Location: 13SB 12
Sampled By: M. Cochran / T. Rojahn
C.O.C. No.: 968509

Type of Sample:
[X] Low Concentration
[] High Concentration

GRAB SAMPLE DATA:

	Depth	Color	Description (Sand, Silt, Clay, Moisture, etc.)
Date: 3-26-03 Time: 835 Method: DPT Monitor Reading (ppm): 2.1	2-4'	BROWN	SANDY SILT, DAMP

COMPOSITE SAMPLE DATA:

Date:	Time	Depth	Color	Description (Sand, Silt, Clay, Moisture, etc.)
Method:				
Monitor Readings (Range in ppm):				

SAMPLE COLLECTION INFORMATION:

Analysis	Container Requirements	Collected	Other
VOCs (8260B)	(3) Encore Samplers	Yes/ No	
VOCs (8015B)	(2) Encore Samplers	Yes/ No	
SVOCs (8270C, SIM & 8151A) & PCBs (8082)	(2) 8oz. Glass Jars	Yes/ No	
TOC, CEC & pH	(2) 8oz. Glass Jars	Yes/ No	
Dioxins/Furans	(1) _oz. Glass Jars	Yes/ No	

OBSERVATIONS / NOTES:

Soil Group No. PBL-8

MAP:

See Revised Figure 3-2

Circle if Applicable:

MS/MSD

Duplicate ID No.:

Signature(s):

Tetra Tech NUS, Inc.

SOIL SAMPLE LOG SHEET

Project Site Name: NSWC CRANE
Project No.: N9060 CTO 0279

[X] Surface Soil
[] Subsurface Soil
[] Sediment
[] Other:
[] QA Sample Type:

Sample ID No.: 13SS 13 0002
Sample Location: 13SB 13
Sampled By: M.Cochran / T. Rojahn
C.O.C. No.: 968 £0966

Type of Sample:
[X] Low Concentration
[] High Concentration

GRAB SAMPLE DATA:

	Depth	Color	Description (Sand, Silt, Clay, Moisture, etc.)
Date: 3-26-03 Time: 750 Method: DPT Monitor Reading (ppm): 0	0 - 2'	BROWN	SANDY SILT, DAMP

COMPOSITE SAMPLE DATA:

	Time	Depth	Color	Description (Sand, Silt, Clay, Moisture, etc.)
Date:				
Method:				
Monitor Readings (Range in ppm):				

SAMPLE COLLECTION INFORMATION:

Analysis	Container Requirements	Collected	Other
VOCs (8260B)	(3) Encore Samplers	Yes/ No	
VOCs (8015B)	(2) Encore Samplers	Yes/ No	
SVOCs (8270C, SIM & 8151A) & PCBs (8082)	(2) 8oz. Glass Jars	Yes/ No	
TOC, CEC & pH	(2) 8oz. Glass Jars	Yes/ No	
Dioxins/Furans	(1) _oz. Glass Jars	Yes/ No	

OBSERVATIONS / NOTES:

Soil Group No. PS-3

MAP:

See Revised Figure 3-2

Circle if Applicable:

MS/MSD —

Duplicate ID No.: —

Signature(s):

Ted Rojahn

Tetra Tech NUS, Inc.

SOIL SAMPLE LOG SHEET

Project Site Name: NSWC CRANE
Project No.: N9060 CTO 0279

[] Surface Soil
[X] Subsurface Soil
[] Sediment
[] Other:
[] QA Sample Type:

Sample ID No.: 13SB 130204
Sample Location: 13SB 13
Sampled By: M. Cochran / T. Rojahn
C.O.C. No.: 468 F0966

Type of Sample:
[X] Low Concentration
[] High Concentration

GRAB SAMPLE DATA:

	Depth	Color	Description (Sand, Silt, Clay, Moisture, etc.)
Date: 3-26-03 Time: 7 55 Method: DPT Monitor Reading (ppm): 0	2-4'	BROWN	SANDY SILT, DAMP

COMPOSITE SAMPLE DATA:

Date:	Time	Depth	Color	Description (Sand, Silt, Clay, Moisture, etc.)
Method:				
Monitor Readings (Range in ppm):				

SAMPLE COLLECTION INFORMATION:

Analysis	Container Requirements	Collected	Other
VOCs (8260B)	(3) Encore Samplers	Yes/ No	
VOCs (8015B)	(2) Encore Samplers	Yes/ No	
SVOCs (8270C, SIM & 8151A) & PCBs (8082)	(2) 8oz. Glass Jars	Yes/ No	
TOC, CEC & pH	(2) 8oz. Glass Jars	Yes/ No	
Dioxins/Furans	(1) _oz. Glass Jars	Yes/ No	

OBSERVATIONS / NOTES:

Soil Group No. PBL-8

MAP:

See Revised Figure 3-2

Circle if Applicable:

MS/MSD

Duplicate ID No.:

Signature(s):

Tetra Tech NUS, Inc.

SOIL SAMPLE LOG SHEET

Project Site Name: NSWC CRANE
Project No.: N9060 CTO 0279

[X] Surface Soil
[] Subsurface Soil
[] Sediment
[] Other:
[] QA Sample Type:

Sample ID No.: 13SS 14 0001
Sample Location: 13SB 14
Sampled By: M.Cochran / T. Rojahn
C.O.C. No.: 0985 & 0987

Type of Sample:
[X] Low Concentration
[] High Concentration

GRAB SAMPLE DATA:

	Depth	Color	Description (Sand, Silt, Clay, Moisture, etc.)
Date: 4/10/03 Time: 1210 Method: ~~DPT~~ HAND AUGER Monitor Reading (ppm): 0.0	0-1'	BROWN	SANDY SILT SOME TOPSOIL

COMPOSITE SAMPLE DATA:

Date:	Time	Depth	Color	Description (Sand, Silt, Clay, Moisture, etc.)
Method:				
Monitor Readings (Range in ppm):				

SAMPLE COLLECTION INFORMATION:

Analysis	Container Requirements	Collected	Other
VOCs (8260B)	(3) Encore Samplers	Yes/No	
VOCs (8015B)	(2) Encore Samplers	Yes/No	
SVOCs (8270C, SIM & 8151A) & PCBs (8082)	(2) 8oz. Glass Jars	Yes/No	
TOC, CEC & pH	(2) 8oz. Glass Jars	Yes/No	
Dioxins/Furans	(1) _oz. Glass Jars	Yes/No	

OBSERVATIONS / NOTES:

Soil Group No. PS-3

& HD REFUSAL @1' 2 OFFSETS

MAP:

See Revised Figure 3-2

Circle if Applicable:

MS/MSD —

Duplicate ID No.: —

Signature(s): Robert Balkwy

Tetra Tech NUS, Inc.

SOIL SAMPLE LOG SHEET

Project Site Name: NSWC CRANE
Project No.: N9060 CTO 0279

[X] Surface Soil
[] Subsurface Soil
[] Sediment
[] Other:
[] QA Sample Type:

Sample ID No.: 13SS 15 0002
Sample Location: 13SB 15
Sampled By: M.Cochran / T. Rojahn
C.O.C. No.: 0987

Type of Sample:
[X] Low Concentration
[] High Concentration

GRAB SAMPLE DATA:

	Depth	Color	Description (Sand, Silt, Clay, Moisture, etc.)
Date: 4/10/03 Time: 1230 Method: ~~DPT~~ HAND AUGER Monitor Reading (ppm): 0.0	0 - 2'	BROWN	TOP SOIL. HIGH ORGANIC CONTENT

COMPOSITE SAMPLE DATA:

Date:	Time	Depth	Color	Description (Sand, Silt, Clay, Moisture, etc.)
Method:				
Monitor Readings (Range in ppm):				

SAMPLE COLLECTION INFORMATION:

Analysis	Container Requirements	Collected	Other
VOCs (8260B)	(3) Encore Samplers	Yes/ No	
VOCs (8015B)	(2) Encore Samplers	Yes/ No	
SVOCs (8270C, SIM & 8151A) & PCBs (8082)	(2) 8oz. Glass Jars	Yes/ No	
TOC, CEC & pH	(2) 8oz. Glass Jars	Yes/ No	
Dioxins/Furans	(1) _oz. Glass Jars	Yes/ No	

OBSERVATIONS / NOTES:

Soil Group No. PS-3

Collected <1' From 13SB09
SEE Boring Log 13SB09

MAP:

See Revised Figure 3-2

Circle if Applicable:

MS/MSD	Duplicate ID No.:
—	—

Signature(s): Robert Balkwill

Tetra Tech NUS, Inc.

SOIL SAMPLE LOG SHEET

Project Site Name: NSWC CRANE
Project No.: N9060 CTO 0279

[] Surface Soil
[X] Subsurface Soil
[] Sediment
[] Other:
[] QA Sample Type:

Sample ID No.: 13SB 150204
Sample Location: 13SB 15
Sampled By: M. Cochran / T. Rojahn
C.O.C. No.: 0987

Type of Sample:
[X] Low Concentration
[] High Concentration

GRAB SAMPLE DATA:

	Depth	Color	Description (Sand, Silt, Clay, Moisture, etc.)
Date: 4/10/03 Time: 1235 Method: ~~DPT~~ HAND AUGER Monitor Reading (ppm): 0.0	2'-4'	YELLOW ORANGE	SANDY SILT

COMPOSITE SAMPLE DATA:

Date:	Time	Depth	Color	Description (Sand, Silt, Clay, Moisture, etc.)
Method:				
Monitor Readings (Range in ppm):				

SAMPLE COLLECTION INFORMATION:

Analysis	Container Requirements	Collected	Other
VOCs (8260B)	(3) Encore Samplers	Yes / No	
VOCs (8015B)	(2) Encore Samplers	Yes / No	
SVOCs (8270C, SIM & 8151A) & PCBs (8082)	(2) 8oz. Glass Jars	Yes / No	
TOC, CEC & pH	(2) 8oz. Glass Jars	Yes / No	
Dioxins/Furans	(1) _oz. Glass Jars	Yes / No	

OBSERVATIONS / NOTES:

Soil Group No. PBL-8

Collected <1' FROM 13SB09
SEE Boring Log 13SB09

MAP:

See Revised Figure 3-2

Circle if Applicable:

MS/MSD	Duplicate ID No.:
—	—

Signature(s):

Robert Bulkover

Tetra Tech NUS, Inc.

SEDIMENT SAMPLE LOG SHEET

Project Site Name: NSWC CRANE
Project No.: N9060 CTO 0279

[] Surface Soil
[] Subsurface Soil
[X] Sediment
[] Other:
[] QA Sample Type:

Sample ID No.: 13SD010004
Sample Location: 13SD01
Sampled By: T. Rojahn
C.O.C. No.: 0975

Type of Sample:
[X] Low Concentration
[] High Concentration

GRAB SAMPLE DATA:

	Depth	Color	Description (Sand, Silt, Clay, Moisture, etc.)
Date: 3/29/03 Time: 1035 Method: Disposable Trowel Monitor Reading (ppm): –	0 - 4"	DARK BROWN	SATURATED CLAYEY SILT + GRAVEL.

COMPOSITE SAMPLE DATA:

	Time	Depth	Color	Description (Sand, Silt, Clay, Moisture, etc.)
Date:				
Method:				
Monitor Readings (Range in ppm):				

SAMPLE COLLECTION INFORMATION:

Analysis	Container Requirements	Collected	Other
Explosives (8330)	(1) 8oz. Glass Jar	Yes/No	
Explosives (8330) & SVOCs (8270C, SIM & 8151A)	(1) 8oz. Glass Jar	Yes/No	
Metals (6020) & Hg (7471A)	(1) 8oz. Glass Jar	Yes/No	
Metals (6020), Hg (7471A), TOC, CEC, pH & AVS/SEM	(1) 8oz. Glass Jar	Yes/No	

OBSERVATIONS / NOTES:

MAP:

Refer to Figure 3-2 of the QAPP for CTO 0166

Circle if Applicable:

MS/MSD —

Duplicate ID No.: —

Signature(s):

Tetra Tech NUS, Inc.

SEDIMENT SAMPLE LOG SHEET

Project Site Name: NSWC CRANE
Project No.: N9060 CTO 0279

[] Surface Soil
[] Subsurface Soil
[X] Sediment
[] Other:
[] QA Sample Type:

Sample ID No.: 13SD020004
Sample Location: 13SD 02
Sampled By: T. Rojahn
C.O.C. No.: 0975

Type of Sample:
[X] Low Concentration
[] High Concentration

GRAB SAMPLE DATA:

	Depth	Color	Description (Sand, Silt, Clay, Moisture, etc.)
Date: 3/29/03 Time: 1105 Method: Disposable Trowel Monitor Reading (ppm): –	0 - 4"	Lt Brown	GRAVELLY SAND, SATURATED

COMPOSITE SAMPLE DATA:

Date:	Time	Depth	Color	Description (Sand, Silt, Clay, Moisture, etc.)
Method:				
Monitor Readings (Range in ppm):				

SAMPLE COLLECTION INFORMATION:

Analysis	Container Requirements	Collected	Other
Explosives (8330)	(1) 8oz. Glass Jar	Yes/No	
Explosives (8330) & SVOCs (8270C, SIM & 8151A)	(1) 8oz. Glass Jar	Yes/No	
Metals (6020) & Hg (7471A)	(1) 8oz. Glass Jar	Yes/No	
Metals (6020), Hg (7471A), TOC, CEC, pH & AVS/SEM	(1) 8oz. Glass Jar	Yes/No	

OBSERVATIONS / NOTES:

MAP:

Refer to Figure 3-2 of the QAPP for CTO 0166

Circle if Applicable:

MS/MSD

Duplicate ID No.: —

Signature(s):

Tetra Tech NUS, Inc.

SEDIMENT SAMPLE LOG SHEET

Project Site Name: NSWC CRANE
Project No.: N9060 CTO 0279

[] Surface Soil
[] Subsurface Soil
[X] Sediment
[] Other:
[] QA Sample Type:

Sample ID No.: 13SD030004
Sample Location: 13SD03
Sampled By: ~~T. Bojahn~~ M. COCHRAN
C.O.C. No.: 0975

Type of Sample:
[X] Low Concentration
[] High Concentration

GRAB SAMPLE DATA:

	Depth	Color	Description (Sand, Silt, Clay, Moisture, etc.)
Date: 3/29/03 Time: 1420 Method: Disposable Trowel Monitor Reading (ppm): —	0 - 4"	LIGHT BROWN	SANDY SILT, SATURATED

COMPOSITE SAMPLE DATA:

	Time	Depth	Color	Description (Sand, Silt, Clay, Moisture, etc.)
Date:				
Method:				
Monitor Readings (Range in ppm):				

SAMPLE COLLECTION INFORMATION:

Analysis	Container Requirements	Collected	Other
Explosives (8330)	(1) 8oz. Glass Jar	Yes/No	
Explosives (8330) & SVOCs (8270C, SIM & 8151A)	(1) 8oz. Glass Jar	Yes/No	
Metals (6020) & Hg (7471A)	(1) 8oz. Glass Jar	Yes/No	
Metals (6020), Hg (7471A), TOC, CEC, pH & AVS/SEM	(1) 8oz. Glass Jar	Yes/No	

OBSERVATIONS / NOTES:

MAP:

Refer to Figure 3-2 of the QAPP for CTO 0166

Circle if Applicable:

MS/MSD —

Duplicate ID No.: —

Signature(s):

Tetra Tech NUS, Inc.

SEDIMENT SAMPLE LOG SHEET

Project Site Name: NSWC CRANE
Project No.: N9060 CTO 0279

[] Surface Soil
[] Subsurface Soil
[X] Sediment
[] Other:
[] QA Sample Type:

Sample ID No.: 13SD~~0~~4 0004
Sample Location: 13SD
Sampled By: ~~T. Rojahn~~ M. COCHRAN
C.O.C. No.: 0975

Type of Sample:
[X] Low Concentration
[] High Concentration

GRAB SAMPLE DATA:

	Depth	Color	Description (Sand, Silt, Clay, Moisture, etc.)
Date: 3/29/03 Time: 1450 Method: Disposable Trowel Monitor Reading (ppm):	0 - 4"	LIGHT BROWN	SATURATED GRAVELLY SAND,

COMPOSITE SAMPLE DATA:

Date:	Time	Depth	Color	Description (Sand, Silt, Clay, Moisture, etc.)
Method:				
Monitor Readings (Range in ppm):				

SAMPLE COLLECTION INFORMATION:

Analysis	Container Requirements	Collected	Other
Explosives (8330)	(1) 8oz. Glass Jar	Yes/No	
Explosives (8330) & SVOCs (8270C, SIM & 8151A)	(1) 8oz. Glass Jar	Yes/No	
Metals (6020) & Hg (7471A)	(1) 8oz. Glass Jar	Yes/No	
Metals (6020), Hg (7471A), TOC, CEC, pH & AVS/SEM	(1) 8oz. Glass Jar	Yes/No	

OBSERVATIONS / NOTES:

MAP:

Refer to Figure 3-2 of the QAPP for CTO 0166

Circle if Applicable:

MS/MSD —

Duplicate ID No.: —

Signature(s):

Tetra Tech NUS, Inc.

SEDIMENT SAMPLE LOG SHEET

Project Site Name: NSWC CRANE
Project No.: N9060 CTO 0279

[] Surface Soil
[] Subsurface Soil
[X] Sediment
[] Other:
[] QA Sample Type:

Sample ID No.: 13SD05 0004
Sample Location: 13SD05
Sampled By: ~~T. Rojahn~~ M. COCHRAN
C.O.C. No.: 0975 & 0978 (DUP)

Type of Sample:
[X] Low Concentration
[] High Concentration

GRAB SAMPLE DATA:

	Depth	Color	Description (Sand, Silt, Clay, Moisture, etc.)
Date: 3/29/03 Time: 1515 Method: Disposable Trowel Monitor Reading (ppm): –	0 - 4"	LIGHT BROWN	CLAYEY SILT, SATURATED

COMPOSITE SAMPLE DATA:

Date:	Time	Depth	Color	Description (Sand, Silt, Clay, Moisture, etc.)
Method:				
Monitor Readings (Range in ppm):				

SAMPLE COLLECTION INFORMATION:

Analysis	Container Requirements	Collected	Other
Explosives (8330)	(1) 8oz. Glass Jar	Yes/No	
Explosives (8330) & SVOCs (8270C, SIM & 8151A)	(1) 8oz. Glass Jar	Yes/No	
Metals (6020) & Hg (7471A)	(1) 8oz. Glass Jar	Yes/No	
Metals (6020), Hg (7471A), TOC, CEC, pH & AVS/SEM	(1) 8oz. Glass Jar	Yes/No	

OBSERVATIONS / NOTES:

MAP:

Refer to Figure 3-2 of the QAPP for CTO 0166

Circle if Applicable:

MS/MSD

Duplicate ID No.: FD03290301

Signature(s):

Tetra Tech NUS, Inc.

SEDIMENT SAMPLE LOG SHEET

Project Site Name: NSWC CRANE
Project No.: N9060 CTO 0279

[] Surface Soil
[] Subsurface Soil
[X] Sediment
[] Other:
[] QA Sample Type:

Sample ID No.: 13SD06 0004
Sample Location: 13SD06
Sampled By: T. Rojahn
C.O.C. No.: 0975

Type of Sample:
[X] Low Concentration
[] High Concentration

GRAB SAMPLE DATA:

	Depth	Color	Description (Sand, Silt, Clay, Moisture, etc.)
Date: 3/29/03 Time: 1545 Method: Disposable Trowel Monitor Reading (ppm): —	0 - 4"	LIGHT BROWN	SANDY SILT, SATURATED

COMPOSITE SAMPLE DATA:

Date:	Time	Depth	Color	Description (Sand, Silt, Clay, Moisture, etc.)
Method:				
Monitor Readings (Range in ppm):				

SAMPLE COLLECTION INFORMATION:

Analysis	Container Requirements	Collected	Other
Explosives (8330)	(1) 8oz. Glass Jar	Yes/No	
Explosives (8330) & SVOCs (8270C, SIM & 8151A)	(1) 8oz. Glass Jar	Yes/No	
Metals (6020) & Hg (7471A)	(1) 8oz. Glass Jar	Yes/No	
Metals (6020), Hg (7471A), TOC, CEC, pH & AVS/SEM	(1) 8oz. Glass Jar	Yes/No	

OBSERVATIONS / NOTES:

MAP:

Refer to Figure 3-2 of the QAPP for CTO 0166

Circle if Applicable:

MS/MSD —

Duplicate ID No.: —

Signature(s):

Tetra Tech NUS, Inc.

SEDIMENT SAMPLE LOG SHEET

Project Site Name: NSWC CRANE
Project No.: N9060 CTO 0279

[] Surface Soil
[] Subsurface Soil
[X] Sediment
[] Other:
[] QA Sample Type:

Sample ID No.: 13SD070004
Sample Location: 13SD07
Sampled By: ~~T Bojahn~~ M. Cochran
C.O.C. No.: 0975

Type of Sample:
[X] Low Concentration
[] High Concentration

GRAB SAMPLE DATA:

	Depth	Color	Description (Sand, Silt, Clay, Moisture, etc.)
Date: 3/29/03 Time: 1610 Method: Disposable Trowel Monitor Reading (ppm): –	0 - 4"	LIGHT BROWN	GRAVELLY SAND, SATURATED

COMPOSITE SAMPLE DATA:

Date:	Time	Depth	Color	Description (Sand, Silt, Clay, Moisture, etc.)
Method:				
Monitor Readings (Range in ppm):				

SAMPLE COLLECTION INFORMATION:

Analysis	Container Requirements	Collected	Other
Explosives (8330)	(1) 8oz. Glass Jar	Yes/No	
Explosives (8330) & SVOCs (8270C, SIM & 8151A)	(1) 8oz. Glass Jar	Yes/No	
Metals (6020) & Hg (7471A)	(1) 8oz. Glass Jar	Yes/No	
Metals (6020), Hg (7471A), TOC, CEC, pH & AVS/SEM	(1) 8oz. Glass Jar	Yes/No	

OBSERVATIONS / NOTES:

MAP:

Refer to Figure 3-2 of the QAPP for CTO 0166

Circle if Applicable:

MS/MSD —

Duplicate ID No.: —

Signature(s):

Tetra Tech NUS, Inc.

SEDIMENT SAMPLE LOG SHEET

Project Site Name: NSWC CRANE
Project No.: N9060 CTO 0279

[] Surface Soil
[] Subsurface Soil
[X] Sediment
[] Other:
[] QA Sample Type:

Sample ID No.: 13SD08 0004
Sample Location: 13SD08
Sampled By: ~~T. Rojahn~~ M. Cochran
C.O.C. No.: 0975

Type of Sample:
[X] Low Concentration
[] High Concentration

GRAB SAMPLE DATA:

	Depth	Color	Description (Sand, Silt, Clay, Moisture, etc.)
Date: 3/29/03 Time: 1620 Method: Disposable Trowel Monitor Reading (ppm): —	0 - 4"	DARK BROWN	V. MOIST SILTY CLAY + GRAVEL

COMPOSITE SAMPLE DATA:

Date:	Time	Depth	Color	Description (Sand, Silt, Clay, Moisture, etc.)
Method:				
Monitor Readings (Range in ppm):				

SAMPLE COLLECTION INFORMATION:

Analysis	Container Requirements	Collected	Other
Explosives (8330)	(1) 8oz. Glass Jar	Yes/No	
Explosives (8330) & SVOCs (8270C, SIM & 8151A)	(1) 8oz. Glass Jar	Yes/No	
Metals (6020) & Hg (7471A)	(1) 8oz. Glass Jar	Yes/No	
Metals (6020), Hg (7471A), TOC, CEC, pH & AVS/SEM	(1) 8oz. Glass Jar	Yes/No	

OBSERVATIONS / NOTES:

MAP:

Refer to Figure 3-2 of the QAPP for CTO 0166

Circle if Applicable:

MS/MSD	Duplicate ID No.:
—	~~FD0329030 1~~ TR

Signature(s):

Tetra Tech NUS, Inc.

SEDIMENT SAMPLE LOG SHEET

Project Site Name: NSWC CRANE
Project No.: N9060 CTO 0279

[] Surface Soil
[] Subsurface Soil
[X] Sediment
[] Other:
[] QA Sample Type:

Sample ID No.: 13SD09 0004
Sample Location: 13SD 09
Sampled By: ~~T. Rojahn~~ M. Cochran
C.O.C. No.: 0775

Type of Sample:
[X] Low Concentration
[] High Concentration

GRAB SAMPLE DATA:

	Depth	Color	Description (Sand, Silt, Clay, Moisture, etc.)
Date: 3/29/03 Time: 1650 Method: Disposable Trowel Monitor Reading (ppm): —	0 - 4"	LT BROWN	SANDY SILT, SATURATED

COMPOSITE SAMPLE DATA:

Date:	Time	Depth	Color	Description (Sand, Silt, Clay, Moisture, etc.)
Method:				
Monitor Readings (Range in ppm):				

SAMPLE COLLECTION INFORMATION:

Analysis	Container Requirements	Collected	Other
Explosives (8330)	(1) 8oz. Glass Jar	Yes/No	
Explosives (8330) & SVOCs (8270C, SIM & 8151A)	(1) 8oz. Glass Jar	Yes/No	
Metals (6020) & Hg (7471A)	(1) 8oz. Glass Jar	Yes/No	
Metals (6020), Hg (7471A), TOC, CEC, pH & AVS/SEM	(1) 8oz. Glass Jar	Yes/No	

OBSERVATIONS / NOTES:

MAP:

Refer to Figure 3-2 of the QAPP for CTO 0166

Circle if Applicable:

MS/MSD —

Duplicate ID No.: —

Signature(s):

Tetra Tech NUS, Inc.

SEDIMENT SAMPLE LOG SHEET

Project Site Name: NSWC CRANE
Project No.: N9060 CTO 0279

[] Surface Soil
[] Subsurface Soil
[X] Sediment
[] Other:
[] QA Sample Type:

Sample ID No.: 13SD 10 0004
Sample Location: 13SD 10
Sampled By: ~~T. Rejahn~~ M. Cochran
C.O.C. No.: 0975

Type of Sample:
[X] Low Concentration
[] High Concentration

GRAB SAMPLE DATA:

	Depth	Color	Description (Sand, Silt, Clay, Moisture, etc.)
Date: 3/29/03 Time: 1710 Method: Disposable Trowel Monitor Reading (ppm): –	0 - 4"	LIGHT BROWN	CLAYEY SILT. V. MOIST

COMPOSITE SAMPLE DATA:

Date:	Time	Depth	Color	Description (Sand, Silt, Clay, Moisture, etc.)
Method:				
Monitor Readings (Range in ppm):				

SAMPLE COLLECTION INFORMATION:

Analysis	Container Requirements	Collected	Other
Explosives (8330)	(1) 8oz. Glass Jar	Yes/No	
Explosives (8330) & SVOCs (8270C, SIM & 8151A)	(1) 8oz. Glass Jar	Yes/No	
Metals (6020) & Hg (7471A)	(1) 8oz. Glass Jar	Yes/No	
Metals (6020), Hg (7471A), TOC, CEC, pH & AVS/SEM	(1) 8oz. Glass Jar	Yes/No	

OBSERVATIONS / NOTES:

MAP:

Refer to Figure 3-2 of the QAPP for CTO 0166

Circle if Applicable:

MS/MSD —

Duplicate ID No.: —

Signature(s):

Tetra Tech NUS, Inc.

SEDIMENT SAMPLE LOG SHEET

Project Site Name: NSWC CRANE
Project No.: N9060 CTO 0279

[] Surface Soil
[] Subsurface Soil
[X] Sediment
[] Other:
[] QA Sample Type:

Sample ID No.: 13SD 11 0004
Sample Location: 13SD 11
Sampled By: ~~T. Rojahn~~ M. Cochran
C.O.C. No.: 0978

Type of Sample:
[X] Low Concentration
[] High Concentration

GRAB SAMPLE DATA:

	Depth	Color	Description (Sand, Silt, Clay, Moisture, etc.)
Date: 3/30/03 Time: 0915 Method: Disposable Trowel Monitor Reading (ppm): —	0 - 4"	LIGHT BROWN	SANDY SILT SATURATED

COMPOSITE SAMPLE DATA:

	Time	Depth	Color	Description (Sand, Silt, Clay, Moisture, etc.)
Date:				
Method:				
Monitor Readings (Range in ppm):				

SAMPLE COLLECTION INFORMATION:

Analysis	Container Requirements	Collected	Other
Explosives (8330)	(1) 8oz. Glass Jar	Yes/No	
Explosives (8330) & SVOCs (8270C, SIM & 8151A)	(1) 8oz. Glass Jar	Yes/No	
Metals (6020) & Hg (7471A)	(1) 8oz. Glass Jar	Yes/No	
Metals (6020), Hg (7471A), TOC, CEC, pH & AVS/SEM	(1) 8oz. Glass Jar	Yes/No	

OBSERVATIONS / NOTES:

MAP:

Refer to Figure 3-2 of the QAPP for CTO 0166

Circle if Applicable:

MS/MSD —

Duplicate ID No.: —

Signature(s):

Tetra Tech NUS, Inc.

SEDIMENT SAMPLE LOG SHEET

Project Site Name: NSWC CRANE
Project No.: N9060 CTO 0279

[] Surface Soil
[] Subsurface Soil
[X] Sediment
[] Other:
[] QA Sample Type:

Sample ID No.: 13SD12 0004
Sample Location: 13SD12
Sampled By: T. Rojahn M. Cochran
C.O.C. No.: 0978

Type of Sample:
[X] Low Concentration
[] High Concentration

GRAB SAMPLE DATA:

	Depth	Color	Description (Sand, Silt, Clay, Moisture, etc.)
Date: 3/30/03 Time: 0930 Method: Disposable Trowel Monitor Reading (ppm): —	0 - 4"	LIGHT BROWN	GRAVELLY SAND SATURATED

COMPOSITE SAMPLE DATA:

Date:	Time	Depth	Color	Description (Sand, Silt, Clay, Moisture, etc.)
Method:				
Monitor Readings (Range in ppm):				

SAMPLE COLLECTION INFORMATION:

Analysis	Container Requirements	Collected	Other
Explosives (8330)	(1) 8oz. Glass Jar	Yes/No	
Explosives (8330) & SVOCs (8270C, SIM & 8151A)	(1) 8oz. Glass Jar	Yes/No	
Metals (6020) & Hg (7471A)	(1) 8oz. Glass Jar	Yes/No	
Metals (6020), Hg (7471A), TOC, CEC, pH & AVS/SEM	(1) 8oz. Glass Jar	Yes/No	

OBSERVATIONS / NOTES:

MAP:

Refer to Figure 3-2 of the QAPP for CTO 0166

Circle if Applicable:

MS/MSD

Duplicate ID No.: —

Signature(s): Tony Rojahn

Tetra Tech NUS, Inc.

SEDIMENT SAMPLE LOG SHEET

Project Site Name: NSWC CRANE
Project No.: N9060 CTO 0279

[] Surface Soil
[] Subsurface Soil
[X] Sediment
[] Other:
[] QA Sample Type:

Sample ID No.: 13SD 13 0004
Sample Location: 13SD 13
Sampled By: ~~I. Rojaha~~ M. Cochran
C.O.C. No.: 0978

Type of Sample:
[X] Low Concentration
[] High Concentration

GRAB SAMPLE DATA:

	Depth	Color	Description (Sand, Silt, Clay, Moisture, etc.)
Date: 3/30/03 Time: 1000 Method: Disposable Trowel Monitor Reading (ppm): —	0 - 4"	LIGHT BROWN	GRAVELLY SAND SATURATED

COMPOSITE SAMPLE DATA:

Date:	Time	Depth	Color	Description (Sand, Silt, Clay, Moisture, etc.)
Method:				
Monitor Readings (Range in ppm):				

SAMPLE COLLECTION INFORMATION:

Analysis	Container Requirements	Collected	Other
Explosives (8330)	(1) 8oz. Glass Jar	Yes/No	
Explosives (8330) & SVOCs (8270C, SIM & 8151A)	(1) 8oz. Glass Jar	Yes/No	
Metals (6020) & Hg (7471A)	(1) 8oz. Glass Jar	Yes/No	
Metals (6020), Hg (7471A), TOC, CEC, pH & AVS/SEM	(1) 8oz. Glass Jar	Yes/No	

OBSERVATIONS / NOTES:

MAP:

Refer to Figure 3-2 of the QAPP for CTO 0166

Circle if Applicable:

MS/MSD —

Duplicate ID No.: —

Signature(s):

Tetra Tech NUS, Inc.

SEDIMENT SAMPLE LOG SHEET

Project Site Name: NSWC CRANE
Project No.: N9060 CTO 0279

[] Surface Soil
[] Subsurface Soil
[X] Sediment
[] Other:
[] QA Sample Type:

Sample ID No.: 13SD 14 0004
Sample Location: 13SD 14
Sampled By: ~~T. Rojahn~~ M. Cochran
C.O.C. No.: 0978

Type of Sample:
[X] Low Concentration
[] High Concentration

GRAB SAMPLE DATA:

	Depth	Color	Description (Sand, Silt, Clay, Moisture, etc.)
Date: 3/30/03 Time: 1030 Method: Disposable Trowel Monitor Reading (ppm): –	0 - 4"	LIGHT BROWN	GRAVELLY SAND, SATURATED

COMPOSITE SAMPLE DATA:

Date:	Time	Depth	Color	Description (Sand, Silt, Clay, Moisture, etc.)
Method:				
Monitor Readings (Range in ppm):				

SAMPLE COLLECTION INFORMATION:

Analysis	Container Requirements	Collected	Other
Explosives (8330)	(1) 8oz. Glass Jar	(Yes) No	
Explosives (8330) & SVOCs (8270C, SIM & 8151A)	(1) 8oz. Glass Jar	Yes (No)	
Metals (6020) & Hg (7471A)	(1) 8oz. Glass Jar	Yes (No)	
Metals (6020), Hg (7471A), TOC, CEC, pH & AVS/SEM	(1) 8oz. Glass Jar	(Yes) No	

OBSERVATIONS / NOTES:

MAP:

Refer to Figure 3-2 of the QAPP for CTO 0166

Circle if Applicable:

MS/MSD	Duplicate ID No.:
—	—

Signature(s):

Tetra Tech NUS, Inc.

SEDIMENT SAMPLE LOG SHEET

Project Site Name: NSWC CRANE
Project No.: N9060 CTO 0279

[] Surface Soil
[] Subsurface Soil
[X] Sediment
[] Other:
[] QA Sample Type:

Sample ID No.: 13SD15 0004
Sample Location: 13SD 15
Sampled By: ~~T. Rojahn~~ M. Cochran
C.O.C. No.: 0978

Type of Sample:
[X] Low Concentration
[] High Concentration

GRAB SAMPLE DATA:

	Depth	Color	Description (Sand, Silt, Clay, Moisture, etc.)
Date: 3/30/03 Time: 1045 Method: Disposable Trowel Monitor Reading (ppm): –	0 - 4"	LIGHT BROWN	GRAVELLY SILT. SATURATED

COMPOSITE SAMPLE DATA:

	Time	Depth	Color	Description (Sand, Silt, Clay, Moisture, etc.)
Date:				
Method:				
Monitor Readings (Range in ppm):				

SAMPLE COLLECTION INFORMATION:

Analysis	Container Requirements	Collected	Other
Explosives (8330)	(1) 8oz. Glass Jar	Yes/No	
Explosives (8330) & SVOCs (8270C, SIM & 8151A)	(1) 8oz. Glass Jar	Yes/No	
Metals (6020) & Hg (7471A)	(1) 8oz. Glass Jar	Yes/No	
Metals (6020), Hg (7471A), TOC, CEC, pH & AVS/SEM	(1) 8oz. Glass Jar	Yes/No	

OBSERVATIONS / NOTES:

MAP:

Refer to Figure 3-2 of the QAPP for CTO 0166

Circle if Applicable:

MS/MSD —

Duplicate ID No.: —

Signature(s):

Tetra Tech NUS, Inc.

SEDIMENT SAMPLE LOG SHEET

Project Site Name: NSWC CRANE
Project No.: N9060 CTO 0279

[] Surface Soil
[] Subsurface Soil
[X] Sediment
[] Other:
[] QA Sample Type:

Sample ID No.: 13SD16 0004
Sample Location: 13SD 16
Sampled By: ~~T. Rojahn~~ M. Cochran
C.O.C. No.: 0178

Type of Sample:
[X] Low Concentration
[] High Concentration

GRAB SAMPLE DATA:

	Depth	Color	Description (Sand, Silt, Clay, Moisture, etc.)
Date: 3/30/03 Time: 1100 Method: Disposable Trowel Monitor Reading (ppm): —	0 - 4"	LIGHT BROWN	SILTY SAND + GRAVEL

COMPOSITE SAMPLE DATA:

Date:	Time	Depth	Color	Description (Sand, Silt, Clay, Moisture, etc.)
Method:				
Monitor Readings (Range in ppm):				

SAMPLE COLLECTION INFORMATION:

Analysis	Container Requirements	Collected	Other
Explosives (8330)	(1) 8oz. Glass Jar	Yes/No	
Explosives (8330) & SVOCs (8270C, SIM & 8151A)	(1) 8oz. Glass Jar	Yes/No	
Metals (6020) & Hg (7471A)	(1) 8oz. Glass Jar	Yes/No	
Metals (6020), Hg (7471A), TOC, CEC, pH & AVS/SEM	(1) 8oz. Glass Jar	Yes/No	

OBSERVATIONS / NOTES:

MAP:

Refer to Figure 3-2 of the QAPP for CTO 0166.

Circle if Applicable:

MS/MSD	Duplicate ID No.:
—	—

Signature(s):

Tetra Tech NUS, Inc.

SEDIMENT SAMPLE LOG SHEET

Project Site Name: NSWC CRANE
Project No.: N9060 CTO 0279

[] Surface Soil
[] Subsurface Soil
[X] Sediment
[] Other:
[] QA Sample Type:

Sample ID No.: 13SD 170004
Sample Location: 13SD 17
Sampled By: ~~T. Bojahn~~ M. Cochran
C.O.C. No.: 0975 & 0978

Type of Sample:
[X] Low Concentration
[] High Concentration

GRAB SAMPLE DATA:

	Depth	Color	Description (Sand, Silt, Clay, Moisture, etc.)
Date: 3/29/03 Time: 1630 Method: Disposable Trowel Monitor Reading (ppm): —	0 - 4"	LIGHT BROWN	GRAVELLY SAND, SATURATED

COMPOSITE SAMPLE DATA:

Date:	Time	Depth	Color	Description (Sand, Silt, Clay, Moisture, etc.)
Method:				
Monitor Readings (Range in ppm):				

SAMPLE COLLECTION INFORMATION:

Analysis	Container Requirements	Collected	Other
Explosives (8330)	(1) 8oz. Glass Jar	Yes/No	
Explosives (8330) & SVOCs (8270C, SIM & 8151A)	(1) 8oz. Glass Jar	Yes/No	
Metals (6020) & Hg (7471A)	(1) 8oz. Glass Jar	Yes/No	
Metals (6020), Hg (7471A), TOC, CEC, pH & AVS/SEM	(1) 8oz. Glass Jar	Yes/No	

OBSERVATIONS / NOTES:

MAP:

Refer to Figure 3-2 of the QAPP for CTO 0166

Circle if Applicable:

MS/MSD —

Duplicate ID No.: FD032903 02 EXCEPT GEOTECH

Signature(s):

Tetra Tech NUS, Inc.

SEDIMENT SAMPLE LOG SHEET

Project Site Name: NSWC CRANE
Project No.: N9060 CTO 0279

[] Surface Soil
[] Subsurface Soil
[X] Sediment
[] Other:
[] QA Sample Type:

Sample ID No.: 13SD18 0004
Sample Location: 13SD18
Sampled By: ~~T. Rojahn~~ M Cahrad
C.O.C. No.: 0978

Type of Sample:
[X] Low Concentration
[] High Concentration

GRAB SAMPLE DATA:

	Depth	Color	Description (Sand, Silt, Clay, Moisture, etc.)
Date: 3/29/03 Time: 1745 Method: Disposable Trowel Monitor Reading (ppm): —	0 - 4"	LIGHT BROWN	SANDY SILT, SATURATED

COMPOSITE SAMPLE DATA:

Date:	Time	Depth	Color	Description (Sand, Silt, Clay, Moisture, etc.)
Method:				
Monitor Readings (Range in ppm):				

SAMPLE COLLECTION INFORMATION:

Analysis	Container Requirements	Collected	Other
Explosives (8330)	(1) 8oz. Glass Jar	Yes/No	
Explosives (8330) & SVOCs (8270C, SIM & 8151A)	(1) 8oz. Glass Jar	Yes/No	
Metals (6020) & Hg (7471A)	(1) 8oz. Glass Jar	Yes/No	
Metals (6020), Hg (7471A), TOC, CEC, pH & AVS/SEM	(1) 8oz. Glass Jar	Yes/No	

OBSERVATIONS / NOTES:

MAP:

Refer to Figure 3-2 of the QAPP for CTO 0166

Circle if Applicable:

MS/MSD	Duplicate ID No.:
—	—

Signature(s):

Tetra Tech NUS, Inc.

SEDIMENT SAMPLE LOG SHEET

Project Site Name: NSWC CRANE
Project No.: N9060 CTO 0279

[] Surface Soil
[] Subsurface Soil
[X] Sediment
[] Other:
[] QA Sample Type:

Sample ID No.: 13SD19 0004
Sample Location: 13SD19
Sampled By: ~~T. Rojahn~~ M. Cochran
C.O.C. No.: 0978

Type of Sample:
[X] Low Concentration
[] High Concentration

GRAB SAMPLE DATA:

	Depth	Color	Description (Sand, Silt, Clay, Moisture, etc.)
Date: 3/30/03 Time: 1315 Method: Disposable Trowel Monitor Reading (ppm): —	0 - 4"	LIGHT BROWN	SILTY SAND SATURATED

COMPOSITE SAMPLE DATA:

	Time	Depth	Color	Description (Sand, Silt, Clay, Moisture, etc.)
Date:				
Method:				
Monitor Readings (Range in ppm):				

SAMPLE COLLECTION INFORMATION:

Analysis	Container Requirements	Collected	Other
Explosives (8330)	(1) 8oz. Glass Jar	Yes/No	
Explosives (8330) & SVOCs (8270C, SIM & 8151A)	(1) 8oz. Glass Jar	Yes/No	
Metals (6020) & Hg (7471A)	(1) 8oz. Glass Jar	Yes/No	
Metals (6020), Hg (7471A), TOC, CEC, pH & AVS/SEM	(1) 8oz. Glass Jar	Yes/No	

OBSERVATIONS / NOTES:

MAP:

Refer to Figure 3-2 of the QAPP for CTO 0166

Circle if Applicable:

MS/MSD	Duplicate ID No.:
—	—

Signature(s):

Tetra Tech NUS, Inc.

SEDIMENT SAMPLE LOG SHEET

Project Site Name: NSWC CRANE
Project No.: N9060 CTO 0279

[] Surface Soil
[] Subsurface Soil
[X] Sediment
[] Other:
[] QA Sample Type:

Sample ID No.: 13SD20 0004
Sample Location: 13SD 20
Sampled By: ~~T. Bojahn~~ M. Cuckian
C.O.C. No.: 0978

Type of Sample:
[X] Low Concentration
[] High Concentration

GRAB SAMPLE DATA:

	Depth	Color	Description (Sand, Silt, Clay, Moisture, etc.)
Date: 3/30/03 Time: 1255 Method: Disposable Trowel Monitor Reading (ppm): —	0 - 4"	LIGHT BROWN	SANDY SILT, SATURATED

COMPOSITE SAMPLE DATA:

Date:	Time	Depth	Color	Description (Sand, Silt, Clay, Moisture, etc.)
Method:				
Monitor Readings (Range in ppm):				

SAMPLE COLLECTION INFORMATION:

Analysis	Container Requirements	Collected	Other
Explosives (8330)	(1) 8oz. Glass Jar	Yes/No	
Explosives (8330) & SVOCs (8270C, SIM & 8151A)	(1) 8oz. Glass Jar	Yes/No	
Metals (6020) & Hg (7471A)	(1) 8oz. Glass Jar	Yes/No	
Metals (6020), Hg (7471A), TOC, CEC, pH & AVS/SEM	(1) 8oz. Glass Jar	Yes/No	

OBSERVATIONS / NOTES:

MAP:

Refer to Figure 3-2 of the QAPP for CTO 0166

Circle if Applicable:

MS/MSD	Duplicate ID No.:
—	—

Signature(s):

Tetra Tech NUS, Inc.

SEDIMENT SAMPLE LOG SHEET

Project Site Name: NSWC CRANE
Project No.: N9060 CTO 0279

[] Surface Soil
[] Subsurface Soil
[X] Sediment
[] Other:
[] QA Sample Type:

Sample ID No.: 13SD 21 0004
Sample Location: 13SD 21
Sampled By: ~~T. Bojahn~~ M Cochran
C.O.C. No.: 0428

Type of Sample:
[X] Low Concentration
[] High Concentration

GRAB SAMPLE DATA:

	Depth	Color	Description (Sand, Silt, Clay, Moisture, etc.)
Date: 3/30/03 Time: 1120 Method: Disposable Trowel Monitor Reading (ppm): —	0 - 4"	LIGHT BROWN	SILTY SAND, SATURATED

COMPOSITE SAMPLE DATA:

	Time	Depth	Color	Description (Sand, Silt, Clay, Moisture, etc.)
Date:				
Method:				
Monitor Readings (Range in ppm):				

SAMPLE COLLECTION INFORMATION:

Analysis	Container Requirements	Collected	Other
Explosives (8330)	(1) 8oz. Glass Jar	Yes/No	
Explosives (8330) & SVOCs (8270C, SIM & 8151A)	(1) 8oz. Glass Jar	Yes/No	
Metals (6020) & Hg (7471A)	(1) 8oz. Glass Jar	Yes/No	
Metals (6020), Hg (7471A), TOC, CEC, pH & AVS/SEM	(1) 8oz. Glass Jar	Yes/No	

OBSERVATIONS / NOTES:

MAP:

Refer to Figure 3-2 of the QAPP for CTO 0166

Circle if Applicable:

MS/MSD

Duplicate ID No.: —

Signature(s):

Tetra Tech NUS, Inc.

SEDIMENT SAMPLE LOG SHEET

Project Site Name: NSWC CRANE
Project No.: N9060 CTO 0279

[] Surface Soil
[] Subsurface Soil
[X] Sediment
[] Other:
[] QA Sample Type:

Sample ID No.: 13SD22 0004
Sample Location: 13SD22
Sampled By: ~~T. Rojahn~~ M. Cochran
C.O.C. No.: 0975

Type of Sample:
[X] Low Concentration
[] High Concentration

GRAB SAMPLE DATA:

	Depth	Color	Description (Sand, Silt, Clay, Moisture, etc.)
Date: 3/29/03 Time: 1035 Method: Disposable Trowel Monitor Reading (ppm): —	0 - 4"	LT BROWN	SATURATED CLAYEY SILT + GRAVEL.

COMPOSITE SAMPLE DATA:

Date:	Time	Depth	Color	Description (Sand, Silt, Clay, Moisture, etc.)
Method:				
Monitor Readings (Range in ppm):				

SAMPLE COLLECTION INFORMATION:

Analysis	Container Requirements	Collected	Other
Explosives (8330)	(1) 8oz. Glass Jar	Yes/No	
Explosives (8330) & SVOCs (8270C, SIM & 8151A)	(1) 8oz. Glass Jar	Yes/No	
Metals (6020) & Hg (7471A)	(1) 8oz. Glass Jar	Yes/No	
Metals (6020), Hg (7471A), TOC, CEC, pH & AVS/SEM	(1) 8oz. Glass Jar	Yes/No	

OBSERVATIONS / NOTES:

MAP:

Refer to Figure 3-2 of the QAPP for CTO 0166

Circle if Applicable:

MS/MSD

Duplicate ID No.: —

Signature(s):

Tetra Tech NUS, Inc.

SEDIMENT SAMPLE LOG SHEET

Project Site Name: NSWC CRANE
Project No.: N9060 CTO 0279

[] Surface Soil
[] Subsurface Soil
[X] Sediment
[] Other:
[] QA Sample Type:

Sample ID No.: 13SD 23 0004
Sample Location: 13SD 23
Sampled By: ~~T. Rojahn~~ M. Cochran
C.O.C. No.: 0975

Type of Sample:
[X] Low Concentration
[] High Concentration

GRAB SAMPLE DATA:

	Depth	Color	Description (Sand, Silt, Clay, Moisture, etc.)
Date: 3/29/03	0 - 4"	DARK BROWN	TOPSOIL, V. MOIST CLAYEY SILT + SAND.
Time: 1135			
Method: Disposable Trowel			
Monitor Reading (ppm): —			

COMPOSITE SAMPLE DATA:

	Time	Depth	Color	Description (Sand, Silt, Clay, Moisture, etc.)
Date:				
Method:				
Monitor Readings (Range in ppm):				

SAMPLE COLLECTION INFORMATION:

Analysis	Container Requirements	Collected	Other
Explosives (8330)	(1) 8oz. Glass Jar	Yes/No	
Explosives (8330) & SVOCs (8270C, SIM & 8151A)	(1) 8oz. Glass Jar	Yes/No	
Metals (6020) & Hg (7471A)	(1) 8oz. Glass Jar	Yes/No	
Metals (6020), Hg (7471A), TOC, CEC, pH & AVS/SEM	(1) 8oz. Glass Jar	Yes/No	

OBSERVATIONS / NOTES:

MAP:

Refer to Figure 3-2 of the QAPP for CTO 0166

Circle if Applicable:

MS/MSD —

Duplicate ID No.: —

Signature(s): T. Rojahn

APPENDIX C.1.2
SWMU 13 SOIL AND SEDIMENT SAMPLE LOG SHEETS
ROUND 2

Tetra Tech NUS, Inc.

SOIL & SEDIMENT SAMPLE LOG SHEET

Project Site Name: NSWC CRANE, SWMU13
Project No.: N9060, CTO 0279

[X] Surface Soil
[] Subsurface Soil
[] Sediment
[] Other:
[] QA Sample Type:

Sample ID No.: 13SB160002
Sample Location: SWMU 13
Sampled By: SG+TR
C.O.C. No.: 4831

Type of Sample:
[X] Low Concentration
[] High Concentration

GRAB SAMPLE DATA:

	Depth	Color	Description (Sand, Silt, Clay, Moisture, etc.)
Date: 12/8/03	0'0-02'	BLK/DK.BR/GREY	SILTY CLAY W/SOME FINE SAND AND ORGANIC MAT'RL
Time: 0848			
Method: HAND AUGER			
Monitor Reading (ppm): —			

COMPOSITE SAMPLE DATA:

Date:	Time	Depth	Color	Description (Sand, Silt, Clay, Moisture, etc.)
NA	NA	NA	NA	NA
Method: NA				
Monitor Readings (Range in ppm): NA				

SAMPLE COLLECTION INFORMATION:

Analysis	Container Requirements	Collected	Other
PCBs SW-846 8082	(1) 4oz Jar	Yes	

OBSERVATIONS / NOTES:

MAP:

Circle if Applicable:

MS/MSD	Duplicate ID No.:
—	—

Signature(s): Tony Segal

Tetra Tech NUS, Inc.

SOIL & SEDIMENT SAMPLE LOG SHEET

Project Site Name: NSWC CRANE, SWMU13
Project No.: N9060, CTO 0279

[X] Surface Soil
[] Subsurface Soil
[] Sediment
[] Other:
[] QA Sample Type:

Sample ID No.: 13SB160204
Sample Location: SWMU 13
Sampled By: S.G+TR
C.O.C. No.: 4831

Type of Sample:
[X] Low Concentration
[] High Concentration

GRAB SAMPLE DATA:

	Depth	Color	Description (Sand, Silt, Clay, Moisture, etc.)
Date: 12/8/03			
Time: 0900	02'-04'	LT BR./GREY	SILTY CLAY W/SOME SAND WET + COHESIVE
Method: HAND AUGER			
Monitor Reading (ppm): —			

COMPOSITE SAMPLE DATA:

Date:	Time	Depth	Color	Description (Sand, Silt, Clay, Moisture, etc.)
NA	NA	NA	NA	NA
Method:				
NA				
Monitor Readings				
(Range in ppm):				
NA				

SAMPLE COLLECTION INFORMATION:

Analysis	Container Requirements	Collected	Other
PCBs SW-846 8082	(1) 4oz Jar	Yes	

OBSERVATIONS / NOTES:

WATER IN HOLE @ 2.0'

MAP:

Circle if Applicable:

MS/MSD	Duplicate ID No.:
—	—

Signature(s):

Tetra Tech NUS, Inc.

SOIL & SEDIMENT SAMPLE LOG SHEET

Project Site Name: NSWC CRANE, SWMU13
Project No.: N9060, CTO 0279

[X] Surface Soil
[] Subsurface Soil
[] Sediment
[] Other:
[] QA Sample Type:

Sample ID No.: SS 13SB170002
Sample Location: SWMU 13
Sampled By: SG+TR
C.O.C. No.: 4831

Type of Sample:
[X] Low Concentration
[] High Concentration

GRAB SAMPLE DATA:

	Depth	Color	Description (Sand, Silt, Clay, Moisture, etc.)
Date: 12/8/03			
Time: 0900	00'-02'	BR./LT. BR	SANDY LOAM AND SILTY CLAY
Method: HAND AUGER			
Monitor Reading (ppm): —			

COMPOSITE SAMPLE DATA:

Date:	Time	Depth	Color	Description (Sand, Silt, Clay, Moisture, etc.)
NA	NA	NA	NA	NA
Method: NA				
Monitor Readings (Range in ppm): NA				

SAMPLE COLLECTION INFORMATION:

Analysis	Container Requirements	Collected	Other
PCBs SW-846 8082	(1) 4oz Jar	Yes	

OBSERVATIONS / NOTES:

MAP:

Circle if Applicable:

MS/MSD	Duplicate ID No.:
—	—

Signature(s): Scott Green

Tetra Tech NUS, Inc.

SOIL & SEDIMENT SAMPLE LOG SHEET

Project Site Name: NSWC CRANE, SWMU13
Project No.: N9060, CTO 0279

[X] Surface Soil
[] Subsurface Soil
[] Sediment
[] Other:
[] QA Sample Type:

Sample ID No.: 13SB170204
Sample Location: SWMU 13
Sampled By: SG
C.O.C. No.: 4831

Type of Sample:
[X] Low Concentration
[] High Concentration

GRAB SAMPLE DATA:

	Depth	Color	Description (Sand, Silt, Clay, Moisture, etc.)
Date: 12/8/03			
Time: 0905	02'-04'	LT. BR/GREY/OR	SILTY CLAY W/ SAND (FINE)
Method: HAND AUGER			
Monitor Reading (ppm): —			

COMPOSITE SAMPLE DATA:

Date:	Time	Depth	Color	Description (Sand, Silt, Clay, Moisture, etc.)
NA	NA	NA	NA	NA
Method:				
NA				
Monitor Readings				
(Range in ppm):				
NA				

SAMPLE COLLECTION INFORMATION:

Analysis	Container Requirements	Collected	Other
PCBs SW-846 8082	(1) 4oz Jar	Yes	

OBSERVATIONS / NOTES:

MAP:

Circle if Applicable:

MS/MSD	Duplicate ID No.:
—	—

Signature(s): Scott Sue

Tetra Tech NUS, Inc.

SOIL & SEDIMENT SAMPLE LOG SHEET

Project Site Name: NSWC CRANE, SWMU13
Project No.: N9060, CTO 0279

[X] Surface Soil
[] Subsurface Soil
[] Sediment
[] Other:
[] QA Sample Type:

Sample ID No.: 13 ~~SR~~ SS 180002
Sample Location: SWMU 13
Sampled By: TR
C.O.C. No.: 4831

Type of Sample:
[X] Low Concentration
[] High Concentration

GRAB SAMPLE DATA:

	Depth	Color	Description (Sand, Silt, Clay, Moisture, etc.)
Date: 12/8/03			
Time: 0912	00'-02'	DK. BR/BR	SANDY LOAM + SILTY CLAY
Method: HAND AUGER			
Monitor Reading (ppm): —			

COMPOSITE SAMPLE DATA:

Date:	Time	Depth	Color	Description (Sand, Silt, Clay, Moisture, etc.)
NA	NA	NA	NA	NA
Method:				
NA				
Monitor Readings				
(Range in ppm):				
NA				

SAMPLE COLLECTION INFORMATION:

Analysis	Container Requirements	Collected	Other
PCBs SW-846 8082	(1) 4oz Jar	Yes	

OBSERVATIONS / NOTES:

MAP:

Circle if Applicable:

MS/MSD	Duplicate ID No.:
—	—

Signature(s): Terry Rogal

Tetra Tech NUS, Inc.

SOIL & SEDIMENT SAMPLE LOG SHEET

Project Site Name: NSWC CRANE, SWMU13
Project No.: N9060, CTO 0279

Sample ID No.: 13 SB 180204
Sample Location: SWMU 13
Sampled By: TR
C.O.C. No.: 4831 & 4832

[X] Surface Soil
[] Subsurface Soil
[] Sediment
[] Other:
[] QA Sample Type:

Type of Sample:
[X] Low Concentration
[] High Concentration

GRAB SAMPLE DATA:

	Depth	Color	Description (Sand, Silt, Clay, Moisture, etc.)
Date: 12/8/03 Time: 0930 Method: HAND AUGER Monitor Reading (ppm): —	02'-04'	DK. BR.	SILT + CLAY ALTERNATING (~~MOIST~~) WET %

COMPOSITE SAMPLE DATA:

Date:	Time	Depth	Color	Description (Sand, Silt, Clay, Moisture, etc.)
NA	NA	NA	NA	NA
Method:				
NA				
Monitor Readings				
(Range in ppm):				
NA				

SAMPLE COLLECTION INFORMATION:

Analysis	Container Requirements	Collected	Other
PCBs SW-846 8082	(1) 4oz Jar	Yes	

OBSERVATIONS / NOTES:

WATER IN HOLE AT 3.0'

MAP:

Circle if Applicable:

MS/MSD	Duplicate ID No.:
—	13FD12080301

Signature(s):

Tetra Tech NUS, Inc.

SOIL & SEDIMENT SAMPLE LOG SHEET

Project Site Name: NSWC CRANE, SWMU13
Project No.: N9060, CTO 0279

[X] Surface Soil
[] Subsurface Soil
[] Sediment
[] Other:
[] QA Sample Type:

Sample ID No.: 13 ~~SB~~ SS 19 0002
Sample Location: SWMU 13
Sampled By: SG
C.O.C. No.: 9831

Type of Sample:
[X] Low Concentration
[] High Concentration

GRAB SAMPLE DATA:

	Depth	Color	Description (Sand, Silt, Clay, Moisture, etc.)
Date: 12/8/03			
Time: 0920	00-02	BR./LT. BR	SANDY LOAM + SILTY CLAY MOIST
Method: HAND AUGER			
Monitor Reading (ppm): —			

COMPOSITE SAMPLE DATA:

Date:	Time	Depth	Color	Description (Sand, Silt, Clay, Moisture, etc.)
NA	NA	NA	NA	NA
Method:				
NA				
Monitor Readings				
(Range in ppm):				
NA				

SAMPLE COLLECTION INFORMATION:

Analysis	Container Requirements	Collected	Other
PCBs SW-846 8082	(1) 4oz Jar	Yes	

OBSERVATIONS / NOTES:

MAP:

Circle if Applicable:

MS/MSD

Duplicate ID No.: —

Signature(s): Scott Gruen

Tetra Tech NUS, Inc.

SOIL & SEDIMENT SAMPLE LOG SHEET

Project Site Name: NSWC CRANE, SWMU13
Project No.: N9060, CTO 0279

[X] Surface Soil
[] Subsurface Soil
[] Sediment
[] Other:
[] QA Sample Type:

Sample ID No.: 13SB190203
Sample Location: SWMU 13
Sampled By: SG
C.O.C. No.: 4831

Type of Sample:
[X] Low Concentration
[] High Concentration

GRAB SAMPLE DATA:

	Depth	Color	Description (Sand, Silt, Clay, Moisture, etc.)
Date: 12/8/03	02-03	DK. BR	SILTY CLAY
Time: 0930			MOIST + COHESIVE
Method: HAND AUGER			
Monitor Reading (ppm): —			

COMPOSITE SAMPLE DATA:

Date:	Time	Depth	Color	Description (Sand, Silt, Clay, Moisture, etc.)
NA	NA	NA	NA	NA
Method:				
NA				
Monitor Readings				
(Range in ppm):				
NA				

SAMPLE COLLECTION INFORMATION:

Analysis	Container Requirements	Collected	Other
PCBs SW-846 8082	(1) 4oz Jar	Yes	

OBSERVATIONS / NOTES:

MAP:

Circle if Applicable:

MS/MSD

Duplicate ID No.:

Signature(s): Scott Bria

Tetra Tech NUS, Inc.

SOIL & SEDIMENT SAMPLE LOG SHEET

Project Site Name: NSWC CRANE, SWMU13
Project No.: N9060, CTO 0279

[X] Surface Soil
[] Subsurface Soil
[] Sediment
[] Other:
[] QA Sample Type:

Sample ID No.: 13 SS 20 0002 (SG)
Sample Location: SWMU 13
Sampled By: TR + SG
C.O.C. No.: 4831

Type of Sample:
[X] Low Concentration
[] High Concentration

GRAB SAMPLE DATA:

	Depth	Color	Description (Sand, Silt, Clay, Moisture, etc.)
Date: 12/8/03	00'-01'	BR./LT. BR/ORANGE	DARK BROWN LOAM + CLAYEY FINE SAND W/ ROCK + GRAVEL
Time: 1005			
Method: HAND AUGER			
Monitor Reading (ppm): —			

COMPOSITE SAMPLE DATA:

Date:	Time	Depth	Color	Description (Sand, Silt, Clay, Moisture, etc.)
NA	NA	NA	NA	NA
Method: NA				
Monitor Readings (Range in ppm): NA				

SAMPLE COLLECTION INFORMATION:

Analysis	Container Requirements	Collected	Other
PCBs SW-846 8082	(1) 4oz Jar	Yes	

OBSERVATIONS / NOTES:

REFUSAL AT 1.0'

MAP:

Circle if Applicable:

MS/MSD —

Duplicate ID No.: —

Signature(s): Scott [illegible]

Tetra Tech NUS, Inc.

SOIL & SEDIMENT SAMPLE LOG SHEET

Project Site Name: NSWC CRANE, SWMU13
Project No.: N9060, CTO 0279

[X] Surface Soil
[] Subsurface Soil
[] Sediment
[] Other:
[] QA Sample Type:

Sample ID No.: 13SS(SB)210002
Sample Location: SWMU 13
Sampled By: TR
C.O.C. No.: 4831

Type of Sample:
[X] Low Concentration
[] High Concentration

GRAB SAMPLE DATA:

	Depth	Color	Description (Sand, Silt, Clay, Moisture, etc.)
Date: 12/8/03			
Time: 1004	00-02'	DK. BR/LT. BR/ORANGE	BROWN LOAM + LT. BR. SILTY CLAY W/ FINE SAND
Method: HAND AUGER			
Monitor Reading (ppm): —			

COMPOSITE SAMPLE DATA:

Date:	Time	Depth	Color	Description (Sand, Silt, Clay, Moisture, etc.)
NA	NA	NA	NA	NA
Method:				
NA				
Monitor Readings				
(Range in ppm):				
NA				

SAMPLE COLLECTION INFORMATION:

Analysis	Container Requirements	Collected	Other
PCBs SW-846 8082	(1) 4oz Jar	Yes	

OBSERVATIONS / NOTES:

MAP:

Circle if Applicable:

MS/MSD	Duplicate ID No.:
—	—

Signature(s):

Tetra Tech NUS, Inc.

SOIL & SEDIMENT SAMPLE LOG SHEET

Project Site Name: NSWC CRANE, SWMU13
Project No.: N9060, CTO 0279

[X] Surface Soil
[] Subsurface Soil
[] Sediment
[] Other:
[] QA Sample Type:

Sample ID No.: 13SB210204
Sample Location: SWMU 13
Sampled By: TR
C.O.C. No.: 4831 & 4832

Type of Sample:
[X] Low Concentration
[] High Concentration

GRAB SAMPLE DATA:

	Depth	Color	Description (Sand, Silt, Clay, Moisture, etc.)
Date: 12/8/03 Time: 1019 Method: HAND AUGER Monitor Reading (ppm): —	02'-04'	LT. BR/GREY/ORANGE	SILTY CLAY W/SOME FINE SAND MOIST + COHESIVE

COMPOSITE SAMPLE DATA:

Date:	Time	Depth	Color	Description (Sand, Silt, Clay, Moisture, etc.)
NA	NA	NA	NA	NA
Method: NA				
Monitor Readings (Range in ppm): NA				

SAMPLE COLLECTION INFORMATION:

Analysis	Container Requirements	Collected	Other
PCBs SW-846 8082	(1) 4oz Jar	Yes	

OBSERVATIONS / NOTES:

MAP:

Circle if Applicable:

MS/MSD

Duplicate ID No.: 13FD120803 02

Signature(s):

Tetra Tech NUS, Inc.

SOIL & SEDIMENT SAMPLE LOG SHEET

Project Site Name: NSWC CRANE, SWMU13
Project No.: N9060, CTO 0279

[X] Surface Soil
[] Subsurface Soil
[] Sediment
[] Other:
[] QA Sample Type:

Sample ID No.: SS 16 13SB220002
Sample Location: SWMU 13
Sampled By: SG
C.O.C. No.: 4831

Type of Sample:
[X] Low Concentration
[] High Concentration

GRAB SAMPLE DATA:

	Depth	Color	Description (Sand, Silt, Clay, Moisture, etc.)
Date: 12/8/03			
Time: 1030	00'-02'	DK. BR.	DARK BROWN LOAM + SILTY CLAY (MOIST)
Method: HAND AUGER			
Monitor Reading (ppm): —			

COMPOSITE SAMPLE DATA:

Date:	Time	Depth	Color	Description (Sand, Silt, Clay, Moisture, etc.)
NA	NA	NA	NA	NA
Method:				
NA				
Monitor Readings				
(Range in ppm):				
NA				

SAMPLE COLLECTION INFORMATION:

Analysis	Container Requirements	Collected	Other
PCBs SW-846 8082	(1) 4oz Jar	Yes	

OBSERVATIONS / NOTES:

MAP:

Circle if Applicable:

MS/MSD	Duplicate ID No.:
—	—

Signature(s): Scott Sun

Tetra Tech NUS, Inc.

SOIL & SEDIMENT SAMPLE LOG SHEET

Project Site Name: NSWC CRANE, SWMU13
Project No.: N9060, CTO 0279

[X] Surface Soil
[] Subsurface Soil
[] Sediment
[] Other:
[] QA Sample Type:

Sample ID No.: 13 SB 220204
Sample Location: SWMU 13
Sampled By: SG
C.O.C. No.: 4831

Type of Sample:
[X] Low Concentration
[] High Concentration

GRAB SAMPLE DATA:

	Depth	Color	Description (Sand, Silt, Clay, Moisture, etc.)
Date: 12/8/03			
Time: 1045	02'-04'	BR./LTBR./ORANGE	CLAYEY FINE SAND W/GRAVEL (SLIGHTLY MOIST)
Method: HAND AUGER			
Monitor Reading (ppm): —			

COMPOSITE SAMPLE DATA:

Date:	Time	Depth	Color	Description (Sand, Silt, Clay, Moisture, etc.)
NA	NA	NA	NA	NA
Method:				
NA				
Monitor Readings				
(Range in ppm):				
NA				

SAMPLE COLLECTION INFORMATION:

Analysis	Container Requirements	Collected	Other
PCBs SW-846 8082	(1) 4oz Jar	Yes	

OBSERVATIONS / NOTES:

MAP:

Circle if Applicable:

MS/MSD	Duplicate ID No.:
—	—

Signature(s): Scott Gua

Tetra Tech NUS, Inc.

SOIL & SEDIMENT SAMPLE LOG SHEET

Project Site Name: NSWC CRANE, SWMU13
Project No.: N9060, CTO 0279

[X] Surface Soil
[] Subsurface Soil
[] Sediment
[] Other:
[] QA Sample Type:

Sample ID No.: 13 SS SB 23 0002
Sample Location: SWMU 13
Sampled By: TR
C.O.C. No.: 4832

Type of Sample:
[X] Low Concentration
[] High Concentration

GRAB SAMPLE DATA:

	Depth	Color	Description (Sand, Silt, Clay, Moisture, etc.)
Date: 12/8/03			
Time: 1036	00-02'	DK. GREY / BR. / BLK	SILTY LOAM, SANDY CLAY W/GRAVEL AND PATCHES OF BLACK ORGANIC MAT'RL. (SLIGHTLY MOIST + COHESIVE)
Method: HAND AUGER			
Monitor Reading (ppm): —			

COMPOSITE SAMPLE DATA:

Date:	Time	Depth	Color	Description (Sand, Silt, Clay, Moisture, etc.)
NA	NA	NA	NA	NA
Method:				
NA				
Monitor Readings				
(Range in ppm):				
NA				

SAMPLE COLLECTION INFORMATION:

Analysis	Container Requirements	Collected	Other
PCBs SW-846 8082	(1) 4oz Jar	Yes	

OBSERVATIONS / NOTES:

MAP:

Circle if Applicable:

MS/MSD	Duplicate ID No.:
—	—

Signature(s): Terry Rogers

Tetra Tech NUS, Inc.

SOIL & SEDIMENT SAMPLE LOG SHEET

Project Site Name: NSWC CRANE, SWMU13
Project No.: N9060, CTO 0279

[X] Surface Soil
[] Subsurface Soil
[] Sediment
[] Other:
[] QA Sample Type:

Sample ID No.: 13SB230204
Sample Location: SWMU 13
Sampled By: TR
C.O.C. No.: 4832

Type of Sample:
[X] Low Concentration
[] High Concentration

GRAB SAMPLE DATA:

	Depth	Color	Description (Sand, Silt, Clay, Moisture, etc.)
Date: 12/8/03	02'-04'	ORANGE	CLAYEY SAND (FINE) (SLIGHTLY MOIST + COHESIVE)
Time: 1046			
Method: HAND AUGER			
Monitor Reading (ppm): —			

COMPOSITE SAMPLE DATA:

Date:	Time	Depth	Color	Description (Sand, Silt, Clay, Moisture, etc.)
NA	NA	NA	NA	NA
Method: NA				
Monitor Readings (Range in ppm): NA				

SAMPLE COLLECTION INFORMATION:

Analysis	Container Requirements	Collected	Other
PCBs SW-846 8082	(1) 4oz Jar	Yes	

OBSERVATIONS / NOTES:

MAP:

Circle if Applicable:

MS/MSD	Duplicate ID No.:
—	—

Signature(s): [signature]

Tetra Tech NUS, Inc.

SOIL & SEDIMENT SAMPLE LOG SHEET

Project Site Name: NSWC CRANE, SWMU13
Project No.: N9060, CTO 0279

[X] Surface Soil
[] Subsurface Soil
[] Sediment
[] Other:
[] QA Sample Type:

Sample ID No.: 13 SS SG 24 0002
Sample Location: SWMU 13
Sampled By: SG
C.O.C. No.: 4832

Type of Sample:
[X] Low Concentration
[] High Concentration

GRAB SAMPLE DATA:

	Depth	Color	Description (Sand, Silt, Clay, Moisture, etc.)
Date: 12/8/03			
Time: 1110	00'-02'	GREY/BLK-/ORANGE	SANDY LOAM + CLAYEY SAND W/GRAVEL + PATCHES OF BLACK ORGANIC MATERIAL (SLIGHTLY MOIST)
Method: HAND AUGER			
Monitor Reading (ppm): —			

COMPOSITE SAMPLE DATA:

Date:	Time	Depth	Color	Description (Sand, Silt, Clay, Moisture, etc.)
NA	NA	NA	NA	NA
Method:				
NA				
Monitor Readings				
(Range in ppm):				
NA				

SAMPLE COLLECTION INFORMATION:

Analysis	Container Requirements	Collected	Other
PCBs SW-846 8082	(1) 4oz Jar	Yes	

OBSERVATIONS / NOTES:

MAP:

Circle if Applicable:

MS/MSD —

Duplicate ID No.: —

Signature(s): Scott Green

Tetra Tech NUS, Inc.

SOIL & SEDIMENT SAMPLE LOG SHEET

Project Site Name: NSWC CRANE, SWMU13
Project No.: N9060, CTO 0279

[X] Surface Soil
[] Subsurface Soil
[] Sediment
[] Other:
[] QA Sample Type:

Sample ID No.: 13SB240203
Sample Location: SWMU 13
Sampled By: SG
C.O.C. No.: 4832

Type of Sample:
[X] Low Concentration
[] High Concentration

GRAB SAMPLE DATA:

	Depth	Color	Description (Sand, Silt, Clay, Moisture, etc.)
Date: 12/8/03			
Time: 1120	02-03'	ORANGE	SILTY SAND W/ GRAVEL + SOME CLAY 70% SAND (SLIGHTLY MOIST + COHESIVE)
Method: HAND AUGER			
Monitor Reading (ppm): —			

COMPOSITE SAMPLE DATA:

Date:	Time	Depth	Color	Description (Sand, Silt, Clay, Moisture, etc.)
NA	NA	NA	NA	NA
Method:				
NA				
Monitor Readings				
(Range in ppm):				
NA				

SAMPLE COLLECTION INFORMATION:

Analysis	Container Requirements	Collected	Other
PCBs SW-846 8082	(1) 4oz Jar	Yes	

OBSERVATIONS / NOTES:

REFUSAL AT 3.0'

MAP:

Circle if Applicable:

MS/MSD —

Duplicate ID No.: —

Signature(s): Scott Sier

Tetra Tech NUS, Inc.

SOIL & SEDIMENT SAMPLE LOG SHEET

Project Site Name: NSWC CRANE, SWMU13
Project No.: N9060, CTO 0279

[X] Surface Soil
[] Subsurface Soil
[] Sediment
[] Other:
[] QA Sample Type:

Sample ID No.: 13SS250002 (SG)
Sample Location: SWMU 13
Sampled By: TR
C.O.C. No.: 4832

Type of Sample:
[X] Low Concentration
[] High Concentration

GRAB SAMPLE DATA:

	Depth	Color	Description (Sand, Silt, Clay, Moisture, etc.)
Date: 12/8/03			
Time: 1104	00'-02'	GREY/BLK/ORANGE	SANDY LOAM W/GRAVEL
Method: HAND AUGER			CLAYEY SAND + SANDY CLAY
Monitor Reading (ppm): —			

COMPOSITE SAMPLE DATA:

Date:	Time	Depth	Color	Description (Sand, Silt, Clay, Moisture, etc.)
NA	NA	NA	NA	NA
Method:				
NA				
Monitor Readings				
(Range in ppm):				
NA				

SAMPLE COLLECTION INFORMATION:

Analysis	Container Requirements	Collected	Other
PCBs SW-846 8082	(1) 4oz Jar	Yes	

OBSERVATIONS / NOTES:

MAP:

Circle if Applicable:

MS/MSD	Duplicate ID No.:
—	—

Signature(s):

Tetra Tech NUS, Inc.

SOIL & SEDIMENT SAMPLE LOG SHEET

Project Site Name: NSWC CRANE, SWMU13
Project No.: N9060, CTO 0279

[] Surface Soil
[] Subsurface Soil
[X] Sediment
[] Other:
[] QA Sample Type:

Sample ID No.: 135D250004
Sample Location: 135D25
Sampled By: FW/TK
C.O.C. No.: 4805

Type of Sample:
[X] Low Concentration
[] High Concentration

GRAB SAMPLE DATA:

	Depth	Color	Description (Sand, Silt, Clay, Moisture, etc.)
Date: 10/23/03			
Time: 1650	A"	BRN	FINE - COARSE SAND & GRAVEL (MOIST)
Method: Dis. Trowel			
Monitor Reading (ppm): —			

COMPOSITE SAMPLE DATA:

Date:	Time	Depth	Color	Description (Sand, Silt, Clay, Moisture, etc.)
NA	NA	NA	NA	NA
Method:				
NA				
Monitor Readings				
(Range in ppm):				
NA				

SAMPLE COLLECTION INFORMATION:

Analysis	Container Requirements	Collected	Other
Explosives & Miscellaneous Explosives SW-846 8330	(1) oz Jar	Yes	
Metals SW-846 6020 & Mercury SW-846 7471A	(1) oz Jar	Yes	
Selected Ion Monitoring - PAHs	(1) oz Jar	YES	

OBSERVATIONS / NOTES:

PHOTO (3021)

MAP:

Circle if Applicable:

MS/MSD

Duplicate ID No.:

Signature(s):

Tetra Tech NUS, Inc.

SOIL & SEDIMENT SAMPLE LOG SHEET

Project Site Name: NSWC CRANE, SWMU13
Project No.: N9060, CTO 0279

[] Surface Soil
[] Subsurface Soil
[X] Sediment
[] Other:
[] QA Sample Type:

Sample ID No.: 1350260004
Sample Location: 135026
Sampled By: MC/TK
C.O.C. No.: 4805

Type of Sample:
[X] Low Concentration
[] High Concentration

GRAB SAMPLE DATA:

	Depth	Color	Description (Sand, Silt, Clay, Moisture, etc.)
Date: 10/23/03			
Time: 1425	4"	BRN	Coarse Sand Fine Gravel (DAMP)
Method: Dis Trowel			
Monitor Reading (ppm): —			

COMPOSITE SAMPLE DATA:

Date:	Time	Depth	Color	Description (Sand, Silt, Clay, Moisture, etc.)
NA	NA	NA	NA	NA
Method:				
NA				
Monitor Readings				
(Range in ppm):				
NA				

SAMPLE COLLECTION INFORMATION:

Analysis	Container Requirements	Collected	Other
Explosives & Miscellaneous Explosives SW-846 8330	(1) oz Jar	Yes	
Metals SW-846 6020 & Mercury SW-846 7471A	(1) oz Jar	Yes	
Selected Ion Monitoring - PAHs	(1) oz Jar	—	

OBSERVATIONS / NOTES:

PHOTO # (0326)

MAP:

Circle if Applicable:

MS/MSD — Duplicate ID No.: —

Signature(s):

Tetra Tech NUS, Inc.

SOIL & SEDIMENT SAMPLE LOG SHEET

Project Site Name: NSWC CRANE, SWMU13
Project No.: N9060, CTO 0279

[] Surface Soil
[] Subsurface Soil
[X] Sediment
[] Other:
[] QA Sample Type:

Sample ID No.: 135D270004
Sample Location: 135D27
Sampled By: MC/FW
C.O.C. No.: 4805

Type of Sample:
[X] Low Concentration
[] High Concentration

GRAB SAMPLE DATA:

	Depth	Color	Description (Sand, Silt, Clay, Moisture, etc.)
Date: 10/23/03			
Time: 1420	4"	BRN	Fine-Coarse Sand & Gravel (Saturated)
Method: Dis. Trowel			
Monitor Reading (ppm): —			

COMPOSITE SAMPLE DATA:

Date:	Time	Depth	Color	Description (Sand, Silt, Clay, Moisture, etc.)
NA	NA	NA	NA	NA
Method:				
NA				
Monitor Readings				
(Range in ppm):				
NA				

SAMPLE COLLECTION INFORMATION:

Analysis	Container Requirements	Collected	Other
Explosives & Miscellaneous Explosives SW-846 8330	(1) oz Jar	Yes	
Metals SW-846 6020 & Mercury SW-846 7471A	(1) oz Jar	Yes	
Selected Ion Monitoring - PAHs	(1) oz Jar	—	

OBSERVATIONS / NOTES:

MAP:

Circle if Applicable:

MS/MSD —

Duplicate ID No.: —

Signature(s):

Tetra Tech NUS, Inc.

SOIL & SEDIMENT SAMPLE LOG SHEET

Project Site Name: NSWC CRANE, SWMU13
Project No.: N9060, CTO 0279

[] Surface Soil
[] Subsurface Soil
[X] Sediment
[] Other:
[] QA Sample Type:

Sample ID No.: 135D280004
Sample Location: 135028
Sampled By: MC
C.O.C. No.: 4803

Type of Sample:
[X] Low Concentration
[] High Concentration

GRAB SAMPLE DATA:

	Depth	Color	Description (Sand, Silt, Clay, Moisture, etc.)
Date: 10/22/03			
Time: 1555	4"	BRN	Fine - Coarse Sand & Gravel (V. Moist)
Method: Dig Trowel			
Monitor Reading (ppm): –			

COMPOSITE SAMPLE DATA:

Date:	Time	Depth	Color	Description (Sand, Silt, Clay, Moisture, etc.)
NA	NA	NA	NA	NA
Method:				
NA				
Monitor Readings				
(Range in ppm):				
NA				

SAMPLE COLLECTION INFORMATION:

Analysis	Container Requirements	Collected	Other
Explosives & Miscellaneous Explosives SW-846 8330	(1) oz Jar	Yes	
Metals SW-846 6020 & Mercury SW-846 7471A	(1) oz Jar	Yes	
Selected Ion Monitoring - PAHs	(1) oz Jar		

OBSERVATIONS / NOTES:

Dry Stream
PHOTO 0316

MAP:

Circle if Applicable:

MS/MSD

Duplicate ID No.:

Signature(s):

Tetra Tech NUS, Inc.

SOIL & SEDIMENT SAMPLE LOG SHEET

Project Site Name: NSWC CRANE, SWMU13
Project No.: N9060, CTO 0279

[] Surface Soil
[] Subsurface Soil
[X] Sediment
[] Other:
[] QA Sample Type:

Sample ID No.: 135D290004
Sample Location: 135029
Sampled By: FW
C.O.C. No.: 4803

Type of Sample:
[X] Low Concentration
[] High Concentration

GRAB SAMPLE DATA:

	Depth	Color	Description (Sand, Silt, Clay, Moisture, etc.)
Date: 10/22/03			
Time: 1240	4"	BRN	FINE SAND & GRAVEL (DRY)
Method: Dig Trowel			
Monitor Reading (ppm): —			

COMPOSITE SAMPLE DATA:

Date:	Time	Depth	Color	Description (Sand, Silt, Clay, Moisture, etc.)
NA	NA	NA	NA	NA
Method:				
NA				
Monitor Readings				
(Range in ppm):				
NA				

SAMPLE COLLECTION INFORMATION:

Analysis	Container Requirements	Collected	Other
Explosives & Miscellaneous Explosives SW-846 8330	2 x (1) oz Jar	Yes	
Metals SW-846 6020 & Mercury SW-846 7471A	2 x (1) oz Jar	Yes	
Selected Ion Monitoring - PAHs	(1) oz Jar	—	

OBSERVATIONS / NOTES:

PHOTO # 10 (0311)

MAP:

Circle if Applicable:

MS/MSD	Duplicate ID No.:
—	13FD10220302

Signature(s):

Tetra Tech NUS, Inc.

SOIL & SEDIMENT SAMPLE LOG SHEET

Project Site Name: NSWC CRANE, SWMU13
Project No.: N9060, CTO 0279

[] Surface Soil
[] Subsurface Soil
[X] Sediment
[] Other:
[] QA Sample Type:

Sample ID No.: 13SD300004
Sample Location: 13SD30
Sampled By: FW
C.O.C. No.: 4803

Type of Sample:
[X] Low Concentration
[] High Concentration

GRAB SAMPLE DATA:

	Depth	Color	Description (Sand, Silt, Clay, Moisture, etc.)
Date: 10/22/03		BROWN	COURSE SAND + GRAVEL WET
Time: 1542			
Method: PETROWEL			
Monitor Reading (ppm): –			

COMPOSITE SAMPLE DATA:

Date:	Time	Depth	Color	Description (Sand, Silt, Clay, Moisture, etc.)
NA	NA	NA	NA	NA
Method:				
NA				
Monitor Readings				
(Range in ppm):				
NA				

SAMPLE COLLECTION INFORMATION:

Analysis	Container Requirements	Collected	Other
Explosives & Miscellaneous Explosives SW-846 8330	(1) oz Jar	Yes	
Metals SW-846 6020 & Mercury SW-846 7471A	(1) oz Jar	Yes	
Selected Ion Monitoring - PAHs	(1) oz Jar		

OBSERVATIONS / NOTES:

MAP:

Circle if Applicable:

MS/MSD

Duplicate ID No.:

Signature(s):

Tetra Tech NUS, Inc.

SOIL & SEDIMENT SAMPLE LOG SHEET

Project Site Name: NSWC CRANE, SWMU13
Project No.: N9060, CTO 0279

[] Surface Soil
[] Subsurface Soil
[X] Sediment
[] Other:
[] QA Sample Type:

Sample ID No.: 135D310004
Sample Location: 135031
Sampled By: FW
C.O.C. No.: 4803

Type of Sample:
[X] Low Concentration
[] High Concentration

GRAB SAMPLE DATA:

	Depth	Color	Description (Sand, Silt, Clay, Moisture, etc.)
Date: 10/22/03			
Time: 1310	4"	BRN	FINE to COARSE SAND & GRAVEL
Method: Dis Trowel			
Monitor Reading (ppm): —			

COMPOSITE SAMPLE DATA:

Date:	Time	Depth	Color	Description (Sand, Silt, Clay, Moisture, etc.)
NA	NA	NA	NA	NA
Method:				
NA				
Monitor Readings				
(Range in ppm):				
NA				

SAMPLE COLLECTION INFORMATION:

Analysis	Container Requirements	Collected	Other
Explosives & Miscellaneous Explosives SW-846 8330	(1) oz Jar	Yes	
Metals SW-846 6020 & Mercury SW-846 7471A	(1) oz Jar	Yes	
Selected Ion Monitoring - PAHs	(1) oz Jar	—	

OBSERVATIONS / NOTES:

MAP:

Circle if Applicable:

MS/MSD	Duplicate ID No.:
—	—

Signature(s):

Tetra Tech NUS, Inc.

SOIL & SEDIMENT SAMPLE LOG SHEET

Project Site Name: NSWC CRANE, SWMU13
Project No.: N9060, CTO 0279

[] Surface Soil
[] Subsurface Soil
[X] Sediment
[] Other:
[] QA Sample Type:

Sample ID No.: 13SD32 0004
Sample Location: 13SD032
Sampled By: MC
C.O.C. No.: 4807

Type of Sample:
[X] Low Concentration
[] High Concentration

GRAB SAMPLE DATA:

	Depth	Color	Description (Sand, Silt, Clay, Moisture, etc.)
Date: 10-24-03			
Time: 0850	4"	BROWN	CLAY, SAND, + GRAVEL
Method: DISPOSABLE TROWEL			WET
Monitor Reading (ppm): –			

COMPOSITE SAMPLE DATA:

Date:	Time	Depth	Color	Description (Sand, Silt, Clay, Moisture, etc.)
NA	NA	NA	NA	NA
Method:				
NA				
Monitor Readings				
(Range in ppm):				
NA				

SAMPLE COLLECTION INFORMATION:

Analysis	Container Requirements	Collected	Other
Explosives & Miscellaneous Explosives SW-846 8330	(1) oz Jar	~~Yes~~	
Metals SW-846 6020 & Mercury SW-846 7471A	(1) oz Jar	~~Yes~~	
Selected Ion Monitoring - PAHs	(1) oz Jar	YES	

OBSERVATIONS / NOTES:

~~PHOTO # 0326~~ CAMERA MALFUNCTION COPIED OVER (FL)

MAP:

Circle if Applicable:

MS/MSD

Duplicate ID No.:

Signature(s):

13FD102403-01

Tetra Tech NUS, Inc.

SOIL & SEDIMENT SAMPLE LOG SHEET

Project Site Name: NSWC CRANE, SWMU13
Project No.: N9060, CTO 0279

[] Surface Soil
[] Subsurface Soil
[X] Sediment
[] Other:
[] QA Sample Type:

Sample ID No.: 135D24000a
Sample Location: 135D24
Sampled By: FW/TH
C.O.C. No.: 4905

Type of Sample:
[X] Low Concentration
[] High Concentration

GRAB SAMPLE DATA:

	Depth	Color	Description (Sand, Silt, Clay, Moisture, etc.)
Date: 10/23/03			
Time: 1332	4"	BRN	Fine-Coarse Sand & Gravel w/Root Mat (V. MOIST)
Method: Dis. Trowel			
Monitor Reading (ppm): —			

COMPOSITE SAMPLE DATA:

Date:	Time	Depth	Color	Description (Sand, Silt, Clay, Moisture, etc.)
NA	NA	NA	NA	NA
Method:				
NA				
Monitor Readings				
(Range in ppm):				
NA				

SAMPLE COLLECTION INFORMATION:

Analysis	Container Requirements	Collected	Other
Explosives & Miscellaneous Explosives SW-846 8330	(1) oz Jar	Yes	
Metals SW-846 6020 & Mercury SW-846 7471A	(1) oz Jar	Yes	
Selected Ion Monitoring - PAHs	(1) oz Jar	—	

OBSERVATIONS / NOTES:

PHOTO # (0324)

MAP:

Circle if Applicable:

MS/MSD

Duplicate ID No.: —

Signature(s): [signature]

Tetra Tech NUS, Inc.

SOIL & SEDIMENT SAMPLE LOG SHEET

Project Site Name: NSWC CRANE, SWMU13
Project No.: N9060, CTO 0279

[X] Surface Soil
[] Subsurface Soil
[] Sediment
[] Other:
[] QA Sample Type:

Sample ID No.: 13 SB250204
Sample Location: SWMU 13
Sampled By: TR
C.O.C. No.: 4832

Type of Sample:
[X] Low Concentration
[] High Concentration

GRAB SAMPLE DATA:

	Depth	Color	Description (Sand, Silt, Clay, Moisture, etc.)
Date: 12/8/03	02'-04'	ORANGE	SILTY SAND W/ CLAY 70% SAND ~~SLIGHTLY~~ (MOIST + COHESIVE) SG.
Time: 1115			
Method: HAND AUGER			
Monitor Reading (ppm): —			

COMPOSITE SAMPLE DATA:

Date:	Time	Depth	Color	Description (Sand, Silt, Clay, Moisture, etc.)
NA	NA	NA	NA	NA
Method:				
NA				
Monitor Readings				
(Range in ppm):				
NA				

SAMPLE COLLECTION INFORMATION:

Analysis	Container Requirements	Collected	Other
PCBs SW-846 8082	(1) 4oz Jar	Yes	

OBSERVATIONS / NOTES:

MAP:

Circle if Applicable:

MS/MSD	Duplicate ID No.:
—	—

Signature(s):

APPENDIX C.1.3
SWMU 16 SOIL AND SEDIMENT SAMPLE LOG SHEETS
ROUND 1

Tetra Tech NUS, Inc.

SOIL SAMPLE LOG SHEET

Project Site Name: NSWC CRANE
Project No.: N9060 CTO 0279

[X] Surface Soil
[] Subsurface Soil
[] Sediment
[] Other:
[] QA Sample Type:

Sample ID No.: 16SS 01 0002
Sample Location: 16SB 01
Sampled By: M. Cochran/ T. Rojahn
C.O.C. No.: 0959

Type of Sample:
[X] Low Concentration
[] High Concentration

GRAB SAMPLE DATA:

	Depth	Color	Description (Sand, Silt, Clay, Moisture, etc.)
Date: 3-27-03 Time: 845 Method: DPT Monitor Reading (ppm): 1.7	0 - 2'	GREY BROWN	CLAYEY SILT, DAMP

COMPOSITE SAMPLE DATA:

	Time	Depth	Color	Description (Sand, Silt, Clay, Moisture, etc.)
Date:				
Method:				
Monitor Readings (Range in ppm):				

SAMPLE COLLECTION INFORMATION:

Analysis	Container Requirements	Collected	Other
VOCs (8260B)	(3) Encore Samplers	Yes/ No	
VOCs (8015B)	(2) Encore Samplers	Yes/ No	
SVOCs (8270C, SIM & 8151A) & Explosives (8330 & Picrates)	(1) 8oz. Glass Jar	Yes/ No	
SVOCs (8270C, SIM & 8151A), Explosives (8330 & Picrates) & PCBs (8082)	(1) 8oz. Glass Jar	Yes/ No	
Metals (6020) & Hg (7471A)	(1) 8oz. Glass Jar	Yes/ No	
Metals (6020), Hg (7471A), TOC, CEC & pH	(1) 8oz. Glass Jar	Yes/ No	
Dioxins/Furans	(1) _oz. Glass Jar	Yes/ No	

OBSERVATIONS / NOTES:

Soil Group No. PS-3

MAP:

See Figure 3-3 in the QAPP

Circle if Applicable:

MS/MSD

Duplicate ID No.:

Signature(s):

Tetra Tech NUS, Inc.

SOIL SAMPLE LOG SHEET

Project Site Name: NSWC CRANE
Project No.: N9060 CTO 0279

[] Surface Soil
[X] Subsurface Soil
[] Sediment
[] Other:
[] QA Sample Type:

Sample ID No.: 16SB 010406
Sample Location: 16SB
Sampled By: M. Cochran / T. Rojahn
C.O.C. No.: 959

Type of Sample:
[X] Low Concentration
[] High Concentration

GRAB SAMPLE DATA:

	Depth	Color	Description (Sand, Silt, Clay, Moisture, etc.)
Date: 3-27-03 Time: 0900 Method: DPT Monitor Reading (ppm): 1.7	4-6'	BROWN	CLAYEY SILT, DAMP

COMPOSITE SAMPLE DATA:

Date:	Time	Depth	Color	Description (Sand, Silt, Clay, Moisture, etc.)
Method:				
Monitor Readings (Range in ppm):				

SAMPLE COLLECTION INFORMATION:

Analysis	Container Requirements	Collected	Other
VOCs (8260B)	(3) Encore Samplers	Yes/No	
VOCs (8015B)	(2) Encore Samplers	Yes/No	
SVOCs (8270C, SIM & 8151A) & Explosives (8330 & Picrates)	(1) 8oz. Glass Jar	TA ~~Yes~~/No	
SVOCs (8270C, SIM & 8151A), Explosives (8330 & Picrates) & PCBs (8082)	(1) 8oz. Glass Jar	Yes/No	
Metals (6020) & Hg (7471A)	(1) 8oz. Glass Jar	Yes/No	
Metals (6020), Hg (7471A), TOC, CEC & pH	(1) 8oz. Glass Jar	TA ~~Yes~~/No	

OBSERVATIONS / NOTES:

Soil Group No. PBL-8

MAP:

See Figure 3-3 in the QAPP

Circle if Applicable:

MS/MSD —

Duplicate ID No.: —

Signature(s): Terry Rojahn

Tetra Tech NUS, Inc.

SOIL SAMPLE LOG SHEET

Project Site Name: NSWC CRANE
Project No.: N9060 CTO 0279

[X] Surface Soil
[] Subsurface Soil
[] Sediment
[] Other:
[] QA Sample Type:

Sample ID No.: 16SS 02 0002
Sample Location: 16SB 02
Sampled By: M. Cochran/ T. Rojahn
C.O.C. No.: 0959

Type of Sample:
[X] Low Concentration
[] High Concentration

GRAB SAMPLE DATA:

	Depth	Color	Description (Sand, Silt, Clay, Moisture, etc.)
Date: 3-27-03 Time: 905 Method: DPT Monitor Reading (ppm): 1.7	0 - 2'	BROWN	CLAYEY SILT, DAMP

COMPOSITE SAMPLE DATA:

	Time	Depth	Color	Description (Sand, Silt, Clay, Moisture, etc.)
Date:				
Method:				
Monitor Readings (Range in ppm):				

SAMPLE COLLECTION INFORMATION:

Analysis	Container Requirements	Collected	Other
VOCs (8260B)	(3) Encore Samplers	Yes/ No	
VOCs (8015B)	(2) Encore Samplers	Yes/ No	
SVOCs (8270C, SIM & 8151A) & Explosives (8330 & Picrates)	(1) 8oz. Glass Jar	Yes/ No	
SVOCs (8270C, SIM & 8151A), Explosives (8330 & Picrates) & PCBs (8082)	(1) 8oz. Glass Jar	Yes/ No	
Metals (6020) & Hg (7471A)	(1) 8oz. Glass Jar	Yes/ No	
Metals (6020), Hg (7471A), TOC, CEC & pH	(1) 8oz. Glass Jar	Yes/ No	
Dioxins/Furans	(1) _oz. Glass Jar	Yes/ No	

OBSERVATIONS / NOTES:

Soil Group No. PS-3

MAP:

See Figure 3-3 in the QAPP

Circle if Applicable:

MS/MSD

Duplicate ID No.:

Signature(s):

Tetra Tech NUS, Inc.

SOIL SAMPLE LOG SHEET

Project Site Name: NSWC CRANE
Project No.: N9060 CTO 0279

[] Surface Soil
[X] Subsurface Soil
[] Sediment
[] Other:
[] QA Sample Type:

Sample ID No.: 16SB 020406
Sample Location: 16SB 02
Sampled By: M. Cochran / T. Rojahn
C.O.C. No.: 0959

Type of Sample:
[X] Low Concentration
[] High Concentration

GRAB SAMPLE DATA:

	Depth	Color	Description (Sand, Silt, Clay, Moisture, etc.)
Date: 3-27-03 Time: 915 Method: DPT Monitor Reading (ppm): 1.7	4'-6'	BROWN	SILTY SAND, DAMP

COMPOSITE SAMPLE DATA:

Date:	Time	Depth	Color	Description (Sand, Silt, Clay, Moisture, etc.)
Method:				
Monitor Readings (Range in ppm):				

SAMPLE COLLECTION INFORMATION:

Analysis	Container Requirements	Collected	Other
VOCs (8260B)	(3) Encore Samplers	Yes/ No	
VOCs (8015B)	(2) Encore Samplers	Yes/ No	
SVOCs (8270C, SIM & 8151A) & Explosives (8330 & Picrates)	(1) 8oz. Glass Jar	Yes/ No	
SVOCs (8270C, SIM & 8151A), Explosives (8330 & Picrates) & PCBs (8082)	(1) 8oz. Glass Jar	Yes/ No	
Metals (6020) & Hg (7471A)	(1) 8oz. Glass Jar	Yes/ No	
Metals (6020), Hg (7471A), TOC, CEC & pH	(1) 8oz. Glass Jar	Yes/ No	

OBSERVATIONS / NOTES:

Soil Group No. PBL-8

MAP:

See Figure 3-3 in the QAPP

Circle if Applicable:

MS/MSD

Duplicate ID No.:

Signature(s):

Tetra Tech NUS, Inc.

SOIL SAMPLE LOG SHEET

Project Site Name: NSWC CRANE
Project No.: N9060 CTO 0279

[X] Surface Soil
[] Subsurface Soil
[] Sediment
[] Other:
[] QA Sample Type:

Sample ID No.: 16SS 030002
Sample Location: 16SB 03
Sampled By: M. Cochran/ T. Rojahn
C.O.C. No.: 0959

Type of Sample:
[X] Low Concentration
[] High Concentration

GRAB SAMPLE DATA:

	Depth	Color	Description (Sand, Silt, Clay, Moisture, etc.)
Date: 3-27-03 Time: 940 Method: DPT Monitor Reading (ppm): 1.7	0 - 2'	RED BROWN	CLAYEY SILT, DAMP

COMPOSITE SAMPLE DATA:

	Time	Depth	Color	Description (Sand, Silt, Clay, Moisture, etc.)
Date:				
Method:				
Monitor Readings (Range in ppm):				

SAMPLE COLLECTION INFORMATION:

Analysis	Container Requirements	Collected	Other
VOCs (8260B)	(3) Encore Samplers	Yes/ No	
VOCs (8015B)	(2) Encore Samplers	Yes/ No	
SVOCs (8270C, SIM & 8151A) & Explosives (8330 & Picrates)	(1) 8oz. Glass Jar	Yes/ No	
SVOCs (8270C, SIM & 8151A), Explosives (8330 & Picrates) & PCBs (8082)	(1) 8oz. Glass Jar	Yes/ No	
Metals (6020) & Hg (7471A)	(1) 8oz. Glass Jar	Yes/ No	
Metals (6020), Hg (7471A), TOC, CEC & pH	(1) 8oz. Glass Jar	Yes/ No	
Dioxins/Furans	(1) _oz. Glass Jar	Yes/ No	

OBSERVATIONS / NOTES:

Soil Group No. PS-3

MAP:

See Figure 3-3 in the QAPP

Circle if Applicable:

MS/MSD

Duplicate ID No.:

Signature(s):

Tetra Tech NUS, Inc.

SOIL SAMPLE LOG SHEET

Project Site Name: NSWC CRANE
Project No.: N9060 CTO 0279

[X] Surface Soil
[] Subsurface Soil
[] Sediment
[] Other:
[] QA Sample Type:

Sample ID No.: 16SS 04 0002
Sample Location: 16SB 04
Sampled By: M. Cochran/ T. Rojahn
C.O.C. No.: 0959

Type of Sample:
[X] Low Concentration
[] High Concentration

GRAB SAMPLE DATA:

	Depth	Color	Description (Sand, Silt, Clay, Moisture, etc.)
Date: 3-27-03	0 - 2'	BROWN	CLAYEY SILT, DAMP
Time: 1000			
Method: DPT			
Monitor Reading (ppm): 1.7			

COMPOSITE SAMPLE DATA:

Date:	Time	Depth	Color	Description (Sand, Silt, Clay, Moisture, etc.)
Method:				
Monitor Readings (Range in ppm):				

SAMPLE COLLECTION INFORMATION:

Analysis	Container Requirements	Collected	Other
VOCs (8260B)	(3) Encore Samplers	Yes/ No	
VOCs (8015B)	(2) Encore Samplers	Yes/ No	
SVOCs (8270C, SIM & 8151A) & Explosives (8330 & Picrates)	(1) 8oz. Glass Jar	Yes/ No	
SVOCs (8270C, SIM & 8151A), Explosives (8330 & Picrates) & PCBs (8082)	(1) 8oz. Glass Jar	Yes/ No	
Metals (6020) & Hg (7471A)	(1) 8oz. Glass Jar	Yes/ No	
Metals (6020), Hg (7471A), TOC, CEC & pH	(1) 8oz. Glass Jar	Yes/ No	
Dioxins/Furans	(1) _oz. Glass Jar	Yes/ No	

OBSERVATIONS / NOTES:

Soil Group No. PS-3

MAP:

See Figure 3-3 in the QAPP

Circle if Applicable:

MS/MSD —

Duplicate ID No.: —

Signature(s):

Tetra Tech NUS, Inc.

SOIL SAMPLE LOG SHEET

Project Site Name: NSWC CRANE
Project No.: N9060 CTO 0279

[X] Surface Soil
[] Subsurface Soil
[] Sediment
[] Other:
[] QA Sample Type:

Sample ID No.: 16SS 05 0002
Sample Location: 16SB 05
Sampled By: M. Cochran/ T. Rojahn
C.O.C. No.: 0960

Type of Sample:
[X] Low Concentration
[] High Concentration

GRAB SAMPLE DATA:

	Depth	Color	Description (Sand, Silt, Clay, Moisture, etc.)
Date: 3-27-03 Time: 1035 Method: DPT Monitor Reading (ppm): 1.7	0 - 2'	RED BROWN	CLAYEY SILT, DAMP

COMPOSITE SAMPLE DATA:

	Time	Depth	Color	Description (Sand, Silt, Clay, Moisture, etc.)
Date:				
Method:				
Monitor Readings (Range in ppm):				

SAMPLE COLLECTION INFORMATION:

Analysis	Container Requirements	Collected	Other
VOCs (8260B)	(3) Encore Samplers	Yes/ No	
VOCs (8015B)	(2) Encore Samplers	Yes/ No	
SVOCs (8270C, SIM & 8151A) & Explosives (8330 & Picrates)	(1) 8oz. Glass Jar	Yes/ No	
SVOCs (8270C, SIM & 8151A), Explosives (8330 & Picrates) & PCBs (8082)	(1) 8oz. Glass Jar	Yes/ No	
Metals (6020) & Hg (7471A)	(1) 8oz. Glass Jar	Yes/ No	
Metals (6020), Hg (7471A), TOC, CEC & pH	(1) 8oz. Glass Jar	Yes/ No	
Dioxins/Furans	(1) _oz. Glass Jar	Yes/ No	

OBSERVATIONS / NOTES:

Soil Group No. PS-3

MAP:

See Figure 3-3 in the QAPP

Circle if Applicable:

MS/MSD

Duplicate ID No.: —

Signature(s):

Tetra Tech NUS, Inc.

SOIL SAMPLE LOG SHEET

Project Site Name: NSWC CRANE
Project No.: N9060 CTO 0279

[X] Surface Soil
[] Subsurface Soil
[] Sediment
[] Other:
[] QA Sample Type:

Sample ID No.: 16SS 060002
Sample Location: 16SB 06
Sampled By: M. Cochran/ T. Rojahn
C.O.C. No.: 0959 E 0962

Type of Sample:
[X] Low Concentration
[] High Concentration

GRAB SAMPLE DATA:

	Depth	Color	Description (Sand, Silt, Clay, Moisture, etc.)
Date: 3-27-03 Time: 1055 Method: DPT Monitor Reading (ppm): 1.7	0 - 2'	BROWN	CLAYEY SILT, DAMP

COMPOSITE SAMPLE DATA:

Date:	Time	Depth	Color	Description (Sand, Silt, Clay, Moisture, etc.)
Method:				
Monitor Readings (Range in ppm):				

SAMPLE COLLECTION INFORMATION:

Analysis	Container Requirements	Collected	Other
VOCs (8260B)	(3) Encore Samplers	Yes/ No	
VOCs (8015B)	(2) Encore Samplers	Yes/ No	
SVOCs (8270C, SIM & 8151A) & Explosives (8330 & Picrates)	(1) 8oz. Glass Jar	Yes/ No	
SVOCs (8270C, SIM & 8151A), Explosives (8330 & Picrates) & PCBs (8082)	(1) 8oz. Glass Jar	Yes/ No	
Metals (6020) & Hg (7471A)	(1) 8oz. Glass Jar	Yes/ No	
Metals (6020), Hg (7471A), TOC, CEC & pH	(1) 8oz. Glass Jar	Yes/ No	
Dioxins/Furans	(1) _oz. Glass Jar	Yes/ No	

OBSERVATIONS / NOTES:

Soil Group No. DS-3

MAP:

See Figure 3-3 in the QAPP

Circle if Applicable:

MS/MSD

Duplicate ID No.: —

Signature(s):

Terry Rojahn

Tetra Tech NUS, Inc.

SOIL SAMPLE LOG SHEET

Project Site Name: NSWC CRANE
Project No.: N9060 CTO 0279

[X] Surface Soil
[] Subsurface Soil
[] Sediment
[] Other:
[] QA Sample Type:

Sample ID No.: 16SS 07 0002
Sample Location: 16SB 07
Sampled By: M. Cochran/ T. Rojahn
C.O.C. No.: 0959 & 0962

Type of Sample:
[X] Low Concentration
[] High Concentration

GRAB SAMPLE DATA:

	Depth	Color	Description (Sand, Silt, Clay, Moisture, etc.)
Date: 3-27-03 Time: 1100 Method: DPT Monitor Reading (ppm): 1.7	0 - 2'	BROWN	CLAYEY SILT, DAMP

COMPOSITE SAMPLE DATA:

Date:	Time	Depth	Color	Description (Sand, Silt, Clay, Moisture, etc.)
Method:				
Monitor Readings (Range in ppm):				

SAMPLE COLLECTION INFORMATION:

Analysis	Container Requirements	Collected	Other
VOCs (8260B)	(3) Encore Samplers	Yes/ No	
VOCs (8015B)	(2) Encore Samplers	Yes/ No	
SVOCs (8270C, SIM & 8151A) & Explosives (8330 & Picrates)	(1) 8oz. Glass Jar	Yes/ No	
SVOCs (8270C, SIM & 8151A), Explosives (8330 & Picrates) & PCBs (8082)	(1) 8oz. Glass Jar	Yes/ No	
Metals (6020) & Hg (7471A)	(1) 8oz. Glass Jar	Yes/ No	
Metals (6020), Hg (7471A), TOC, CEC & pH	(1) 8oz. Glass Jar	Yes/ No	
Dioxins/Furans	(1) _oz. Glass Jar	Yes/ No	

OBSERVATIONS / NOTES:

Soil Group No. PS-3

MAP:

See Figure 3-3 in the QAPP

Circle if Applicable:

MS/MSD —

Duplicate ID No.: —

Signature(s): Tey Rojah

Tetra Tech NUS, Inc.

SOIL SAMPLE LOG SHEET

Project Site Name: NSWC CRANE
Project No.: N9060 CTO 0279

[X] Surface Soil
[] Subsurface Soil
[] Sediment
[] Other:
[] QA Sample Type:

Sample ID No.: 16SS 08 0002
Sample Location: 16SB 08
Sampled By: M. Cochran/ T. Rojahn
C.O.C. No.: 0959 & 0962

Type of Sample:
[X] Low Concentration
[] High Concentration

GRAB SAMPLE DATA:

	Depth	Color	Description (Sand, Silt, Clay, Moisture, etc.)
Date: 3-27-03 Time: 1330 Method: DPT Monitor Reading (ppm): 1.7	0 - 2'	BROWN	SILTY SAND, DAMP

COMPOSITE SAMPLE DATA:

Date:	Time	Depth	Color	Description (Sand, Silt, Clay, Moisture, etc.)
Method:				
Monitor Readings (Range in ppm):				

SAMPLE COLLECTION INFORMATION:

Analysis	Container Requirements	Collected	Other
VOCs (8260B)	(3) Encore Samplers	Yes/ No	
VOCs (8015B)	(2) Encore Samplers	Yes/ No	
SVOCs (8270C, SIM & 8151A) & Explosives (8330 & Picrates)	(1) 8oz. Glass Jar	Yes/ No	
SVOCs (8270C, SIM & 8151A), Explosives (8330 & Picrates) & PCBs (8082)	(1) 8oz. Glass Jar	Yes/ No	
Metals (6020) & Hg (7471A)	(1) 8oz. Glass Jar	Yes/ No	
Metals (6020), Hg (7471A), TOC, CEC & pH	(1) 8oz. Glass Jar	Yes/ No	
Dioxins/Furans	(1) _oz. Glass Jar	Yes/ No	

OBSERVATIONS / NOTES:

Soil Group No. PS-3

MAP:

See Figure 3-3 in the QAPP

Circle if Applicable:

MS/MSD —

Duplicate ID No.: —

Signature(s):

Tej Rojahn

Tetra Tech NUS, Inc.

SOIL SAMPLE LOG SHEET

Project Site Name: NSWC CRANE
Project No.: N9060 CTO 0279

[X] Surface Soil
[] Subsurface Soil
[] Sediment
[] Other:
[] QA Sample Type:

Sample ID No.: 16SS 09 0002
Sample Location: 16SB 09
Sampled By: M. Cochran/ T. Rojahn
C.O.C. No.: 0959 & 0962
DUP - 0960

Type of Sample:
[X] Low Concentration
[] High Concentration

GRAB SAMPLE DATA:

	Depth	Color	Description (Sand, Silt, Clay, Moisture, etc.)
Date: 3-27-03 Time: 1355 Method: DPT Monitor Reading (ppm): 1.6	0 - 2'	RED BROWN	CLAYEY SILT, DAMP

COMPOSITE SAMPLE DATA:

	Time	Depth	Color	Description (Sand, Silt, Clay, Moisture, etc.)
Date:				
Method:				
Monitor Readings (Range in ppm):				

SAMPLE COLLECTION INFORMATION:

Analysis	Container Requirements	Collected	Other
VOCs (8260B)	(3) Encore Samplers	Yes/ No	
VOCs (8015B)	(2) Encore Samplers	Yes/ No	
SVOCs (8270C, SIM & 8151A) & Explosives (8330 & Picrates)	(1) 8oz. Glass Jar	Yes/ No	
SVOCs (8270C, SIM & 8151A), Explosives (8330 & Picrates) & PCBs (8082)	(1) 8oz. Glass Jar	Yes/ No	
Metals (6020) & Hg (7471A)	(1) 8oz. Glass Jar	Yes/ No	
Metals (6020), Hg (7471A), TOC, CEC & pH	(1) 8oz. Glass Jar	Yes/ No	
Dioxins/Furans	(1) _oz. Glass Jar	Yes/ No	

OBSERVATIONS / NOTES:

Soil Group No. PS-3

MAP:

See Figure 3-3 in the QAPP

Circle if Applicable:

MS/MSD: —

Duplicate ID No.: FD0327 0301

Signature(s):

Tetra Tech NUS, Inc.

SOIL SAMPLE LOG SHEET

Project Site Name: NSWC CRANE
Project No.: N9060 CTO 0279

[X] Surface Soil
[] Subsurface Soil
[] Sediment
[] Other:
[] QA Sample Type:

Sample ID No.: 16SS 10 0002
Sample Location: 16SB 10
Sampled By: M. Cochran/ T. Rojahn
C.O.C. No.: 0960 E 0962

Type of Sample:
[X] Low Concentration
[] High Concentration

GRAB SAMPLE DATA:

	Depth	Color	Description (Sand, Silt, Clay, Moisture, etc.)
Date: 3-27-03 Time: 1400 Method: DPT Monitor Reading (ppm): 1.6	0 - 2'	RED BROWN	CLAYEY SILT, DAMP

COMPOSITE SAMPLE DATA:

Date:	Time	Depth	Color	Description (Sand, Silt, Clay, Moisture, etc.)
Method:				
Monitor Readings (Range in ppm):				

SAMPLE COLLECTION INFORMATION:

Analysis	Container Requirements	Collected	Other
VOCs (8260B)	(3) Encore Samplers	Yes/ No	
VOCs (8015B)	(2) Encore Samplers	Yes/ No	
SVOCs (8270C, SIM & 8151A) & Explosives (8330 & Picrates)	(1) 8oz. Glass Jar	Yes/ No	
SVOCs (8270C, SIM & 8151A), Explosives (8330 & Picrates) & PCBs (8082)	(1) 8oz. Glass Jar	Yes/ No	
Metals (6020) & Hg (7471A)	(1) 8oz. Glass Jar	Yes/ No	
Metals (6020), Hg (7471A), TOC, CEC & pH	(1) 8oz. Glass Jar	Yes/ No	
Dioxins/Furans	(1) _oz. Glass Jar	Yes/ No	

OBSERVATIONS / NOTES:

Soil Group No. PS-3

MAP:

See Figure 3-3 in the QAPP

Circle if Applicable:

MS/MSD —

Duplicate ID No.: —

Signature(s):

Tony Rojahn

Tetra Tech NUS, Inc.

SOIL SAMPLE LOG SHEET

Project Site Name: NSWC CRANE
Project No.: N9060 CTO 0279

[X] Surface Soil
[] Subsurface Soil
[] Sediment
[] Other:
[] QA Sample Type:

Sample ID No.: 16SS 11 0002
Sample Location: 16SB 11
Sampled By: M. Cochran/ T. Rojahn
C.O.C. No.: 0960 & 0962

Type of Sample:
[X] Low Concentration
[] High Concentration

GRAB SAMPLE DATA:

	Depth	Color	Description (Sand, Silt, Clay, Moisture, etc.)
Date: 3-27-03 Time: 1515 Method: DPT Monitor Reading (ppm): 1.5	0 - 2'	RED BROWN	CLAYEY SILT, DAMP

COMPOSITE SAMPLE DATA:

	Time	Depth	Color	Description (Sand, Silt, Clay, Moisture, etc.)
Date:				
Method:				
Monitor Readings (Range in ppm):				

SAMPLE COLLECTION INFORMATION:

Analysis	Container Requirements	Collected	Other
VOCs (8260B)	(3) Encore Samplers	Yes/ No	
VOCs (8015B)	(2) Encore Samplers	Yes/ No	
SVOCs (8270C, SIM & 8151A) & Explosives (8330 & Picrates)	(1) 8oz. Glass Jar	Yes/ No	
SVOCs (8270C, SIM & 8151A), Explosives (8330 & Picrates) & PCBs (8082)	(1) 8oz. Glass Jar	Yes/ No	
Metals (6020) & Hg (7471A)	(1) 8oz. Glass Jar	Yes/ No	
Metals (6020), Hg (7471A), TOC, CEC & pH	(1) 8oz. Glass Jar	Yes/ No	
Dioxins/Furans	(1) _oz. Glass Jar	Yes/ No	

OBSERVATIONS / NOTES:

Soil Group No. PS-3

MAP:

See Figure 3-3 in the QAPP

Circle if Applicable:

MS/MSD —

Duplicate ID No.: —

Signature(s):

Tetra Tech NUS, Inc.

SOIL SAMPLE LOG SHEET

Project Site Name: NSWC CRANE
Project No.: N9060 CTO 0279

[] Surface Soil
[X] Subsurface Soil
[] Sediment
[] Other:
[] QA Sample Type:

Sample ID No.: 16SB 11 0204
Sample Location: 16SB 11 C[illegible]
Sampled By: M. Cochran / T. Rojahn
C.O.C. No.: 0960

Type of Sample:
[X] Low Concentration
[] High Concentration

GRAB SAMPLE DATA:

	Depth	Color	Description (Sand, Silt, Clay, Moisture, etc.)
Date: 3-27-03 Time: 1520 Method: DPT Monitor Reading (ppm): 1.5	2-4'	RED BROWN	CLAYEY SILT

COMPOSITE SAMPLE DATA:

Date:	Time	Depth	Color	Description (Sand, Silt, Clay, Moisture, etc.)
Method:				
Monitor Readings (Range in ppm):				

SAMPLE COLLECTION INFORMATION:

Analysis	Container Requirements	Collected	Other
VOCs (8260B)	(3) Encore Samplers	Yes/ No	
VOCs (8015B)	(2) Encore Samplers	Yes/ No	
SVOCs (8270C, SIM & 8151A) & Explosives (8330 & Picrates)	(1) 8oz. Glass Jar	Yes/ No	
SVOCs (8270C, SIM & 8151A), Explosives (8330 & Picrates) & PCBs (8082)	(1) 8oz. Glass Jar	Yes/ No	
Metals (6020) & Hg (7471A)	(1) 8oz. Glass Jar	Yes/ No	
Metals (6020), Hg (7471A), TOC, CEC & pH	(1) 8oz. Glass Jar	Yes/ No	

OBSERVATIONS / NOTES:

Soil Group No. PBL-8

MAP:

See Figure 3-3 in the QAPP

Circle if Applicable:

MS/MSD	Duplicate ID No.:
—	—

Signature(s): [illegible]

Tetra Tech NUS, Inc.

SOIL SAMPLE LOG SHEET

Project Site Name: NSWC CRANE
Project No.: N9060 CTO 0279

[X] Surface Soil
[] Subsurface Soil
[] Sediment
[] Other:
[] QA Sample Type:

Sample ID No.: 16SS 12 0002
Sample Location: 16SB 12
Sampled By: M. Cochran/ T. Rojahn
C.O.C. No.: 0972 & 0967

Type of Sample:
[X] Low Concentration
[] High Concentration

GRAB SAMPLE DATA:

	Depth	Color	Description (Sand, Silt, Clay, Moisture, etc.)
Date: 3-28-03 Time: 820 Method: DPT Monitor Reading (ppm): 0	0 - 2'	BROWN	CLAYEY SILT, DAMP

COMPOSITE SAMPLE DATA:

	Time	Depth	Color	Description (Sand, Silt, Clay, Moisture, etc.)
Date:				
Method:				
Monitor Readings (Range in ppm):				

SAMPLE COLLECTION INFORMATION:

Analysis	Container Requirements	Collected	Other
VOCs (8260B)	(3) Encore Samplers	Yes/ No	
VOCs (8015B)	(2) Encore Samplers	Yes/ No	
SVOCs (8270C, SIM & 8151A) & Explosives (8330 & Picrates)	(1) 8oz. Glass Jar	Yes/ No	
SVOCs (8270C, SIM & 8151A), Explosives (8330 & Picrates) & PCBs (8082)	(1) 8oz. Glass Jar	Yes/ No	
Metals (6020) & Hg (7471A)	(1) 8oz. Glass Jar	Yes/ No	
Metals (6020), Hg (7471A), TOC, CEC & pH	(1) 8oz. Glass Jar	Yes/ No	
Dioxins/Furans	(1) _oz. Glass Jar	Yes/ No	

OBSERVATIONS / NOTES:

Soil Group No. PS-3

MAP:

See Figure 3-3 in the QAPP

Circle if Applicable:

MS/MSD —

Duplicate ID No.: —

Signature(s): [signature]

Tetra Tech NUS, Inc.

SOIL SAMPLE LOG SHEET

Project Site Name: NSWC CRANE
Project No.: N9060 CTO 0279

[] Surface Soil
[X] Subsurface Soil
[] Sediment
[] Other:
[] QA Sample Type:

Sample ID No.: 16SB 12 0204
Sample Location: 16SB 12
Sampled By: M. Cochran / T. Rojahn
C.O.C. No.: 0972

Type of Sample:
[X] Low Concentration
[] High Concentration

GRAB SAMPLE DATA:

	Depth	Color	Description (Sand, Silt, Clay, Moisture, etc.)
Date: 3-28-03 Time: 0825 Method: DPT Monitor Reading (ppm): 0	2-3.5'	BROWN	CLAYEY SILT, DAMP

COMPOSITE SAMPLE DATA:

Date:	Time	Depth	Color	Description (Sand, Silt, Clay, Moisture, etc.)
Method:				
Monitor Readings (Range in ppm):				

SAMPLE COLLECTION INFORMATION:

Analysis	Container Requirements	Collected	Other
VOCs (8260B)	(3) Encore Samplers	Yes/ No	
VOCs (8015B)	(2) Encore Samplers	Yes/ No	
SVOCs (8270C, SIM & 8151A) & Explosives (8330 & Picrates)	(1) 8oz. Glass Jar	Yes/ No	
SVOCs (8270C, SIM & 8151A), Explosives (8330 & Picrates) & PCBs (8082)	(1) 8oz. Glass Jar	Yes/ No	
Metals (6020) & Hg (7471A)	(1) 8oz. Glass Jar	Yes/ No	
Metals (6020), Hg (7471A), TOC, CEC & pH	(1) 8oz. Glass Jar	Yes/ No	

OBSERVATIONS / NOTES:

Soil Group No. PBL-8

MAP:

See Figure 3-3 in the QAPP

Circle if Applicable:

MS/MSD —

Duplicate ID No.: —

Signature(s):

Tetra Tech NUS, Inc.

SOIL SAMPLE LOG SHEET

Project Site Name: NSWC CRANE
Project No.: N9060 CTO 0279

[X] Surface Soil
[] Subsurface Soil
[] Sediment
[] Other:
[] QA Sample Type:

Sample ID No.: 16SS 13 0002
Sample Location: 16SB 13
Sampled By: M. Cochran/ T. Rojahn
C.O.C. No.: 0972 & 0967

Type of Sample:
[X] Low Concentration
[] High Concentration

GRAB SAMPLE DATA:

	Depth	Color	Description (Sand, Silt, Clay, Moisture, etc.)
Date: 3-28-03 Time: 800 Method: DPT Monitor Reading (ppm): 0	0 - 2'	DARK BROWN	CLAYEY SILT, DAMP

COMPOSITE SAMPLE DATA:

Date:	Time	Depth	Color	Description (Sand, Silt, Clay, Moisture, etc.)
Method:				
Monitor Readings (Range in ppm):				

SAMPLE COLLECTION INFORMATION:

Analysis	Container Requirements	Collected	Other
VOCs (8260B)	(3) Encore Samplers	Yes/ No	
VOCs (8015B)	(2) Encore Samplers	Yes/ No	
SVOCs (8270C, SIM & 8151A) & Explosives (8330 & Picrates)	(1) 8oz. Glass Jar	Yes/ No	
SVOCs (8270C, SIM & 8151A), Explosives (8330 & Picrates) & PCBs (8082)	(1) 8oz. Glass Jar	Yes/ No	
Metals (6020) & Hg (7471A)	(1) 8oz. Glass Jar	Yes/ No	
Metals (6020), Hg (7471A), TOC, CEC & pH	(1) 8oz. Glass Jar	Yes/ No	
Dioxins/Furans	(1) _oz. Glass Jar	Yes/ No	

OBSERVATIONS / NOTES:

Soil Group No. PS-3

MAP:

See Figure 3-3 in the QAPP

Circle if Applicable:

MS/MSD

Duplicate ID No.:

Signature(s):

Tetra Tech NUS, Inc.

SOIL SAMPLE LOG SHEET

Project Site Name: NSWC CRANE
Project No.: N9060 CTO 0279

[] Surface Soil
[X] Subsurface Soil
[] Sediment
[] Other:
[] QA Sample Type:

Sample ID No.: 16SB 130204
Sample Location: 16SB 13
Sampled By: M. Cochran / T. Rojahn
C.O.C. No.: 0972

Type of Sample:
[X] Low Concentration
[] High Concentration

GRAB SAMPLE DATA:

	Depth	Color	Description (Sand, Silt, Clay, Moisture, etc.)
Date: 3-28-03 Time: 805 Method: DPT Monitor Reading (ppm): 0	2-3.5'	DARK BROWN	CLAYEY SILT, DAMP

COMPOSITE SAMPLE DATA:

Date:	Time	Depth	Color	Description (Sand, Silt, Clay, Moisture, etc.)
Method:				
Monitor Readings (Range in ppm):				

SAMPLE COLLECTION INFORMATION:

Analysis	Container Requirements	Collected	Other
VOCs (8260B)	(3) Encore Samplers	Yes/ No	
VOCs (8015B)	(2) Encore Samplers	Yes/ No	
SVOCs (8270C, SIM & 8151A) & Explosives (8330 & Picrates)	(1) 8oz. Glass Jar	Yes/ No	
SVOCs (8270C, SIM & 8151A), Explosives (8330 & Picrates) & PCBs (8082)	(1) 8oz. Glass Jar	Yes/ No	
Metals (6020) & Hg (7471A)	(1) 8oz. Glass Jar	Yes/ No	
Metals (6020), Hg (7471A), TOC, CEC & pH	(1) 8oz. Glass Jar	Yes/ No	

OBSERVATIONS / NOTES:

Soil Group No. PBL-8

MAP:

See Figure 3-3 in the QAPP

Circle If Applicable:

MS/MSD —

Duplicate ID No.: —

Signature(s):

Tetra Tech NUS, Inc.

SOIL SAMPLE LOG SHEET

Project Site Name: NSWC CRANE
Project No.: N9060.CTO 0279

[X] Surface Soil
[] Subsurface Soil
[] Sediment
[] Other:
[] QA Sample Type:

Sample ID No.: 16SS 14 0002
Sample Location: 16SB 14
Sampled By: M. Cochran/ T. Rojahn
C.O.C. No.: 0960 & 0962

Type of Sample:
[X] Low Concentration
[] High Concentration

GRAB SAMPLE DATA:

	Depth	Color	Description (Sand, Silt, Clay, Moisture, etc.)
Date: 3-27-03 Time: 1500 Method: DPT Monitor Reading (ppm): 1.6	0 - 2'	BROWN	CLAYEY SILT

COMPOSITE SAMPLE DATA:

	Time	Depth	Color	Description (Sand, Silt, Clay, Moisture, etc.)
Date:				
Method:				
Monitor Readings (Range in ppm):				

SAMPLE COLLECTION INFORMATION:

Analysis	Container Requirements	Collected	Other
VOCs (8260B)	(3) Encore Samplers	Yes/ No	
VOCs (8015B)	(2) Encore Samplers	Yes/ No	
SVOCs (8270C, SIM & 8151A) & Explosives (8330 & Picrates)	(1) 8oz. Glass Jar	Yes/ No	
SVOCs (8270C, SIM & 8151A), Explosives (8330 & Picrates) & PCBs (8082)	(1) 8oz. Glass Jar	Yes/ No	
Metals (6020) & Hg (7471A)	(1) 8oz. Glass Jar	Yes/ No	
Metals (6020), Hg (7471A), TOC, CEC & pH	(1) 8oz. Glass Jar	Yes/ No	
Dioxins/Furans	(1) _oz. Glass Jar	Yes/ No	

OBSERVATIONS / NOTES:

Soil Group No. PS-3

MAP:

See Figure 3-3 in the QAPP

Circle if Applicable:

MS/MSD —

Duplicate ID No.: —

Signature(s):

Tetra Tech NUS, Inc.

SOIL SAMPLE LOG SHEET

Project Site Name: NSWC CRANE
Project No.: N9060 CTO 0279

[X] Surface Soil
[] Subsurface Soil
[] Sediment
[] Other:
[] QA Sample Type:

Sample ID No.: 16SS 15 0002
Sample Location: 16SB 15
Sampled By: M. Cochran/ T. Rojahn
C.O.C. No.: 0960 & 0962

Type of Sample:
[X] Low Concentration
[] High Concentration

GRAB SAMPLE DATA:

Date: 3-27-03	Depth	Color	Description (Sand, Silt, Clay, Moisture, etc.)
Time: 1440	0 - 2'	DARK BROWN	CLAYEY SILT, DAMP
Method: DPT			
Monitor Reading (ppm): 1.6			

COMPOSITE SAMPLE DATA:

Date:	Time	Depth	Color	Description (Sand, Silt, Clay, Moisture, etc.)
Method:				
Monitor Readings (Range in ppm):				

SAMPLE COLLECTION INFORMATION:

Analysis	Container Requirements	Collected	Other
VOCs (8260B)	(3) Encore Samplers	Yes/ No	
VOCs (8015B)	(2) Encore Samplers	Yes/ No	
SVOCs (8270C, SIM & 8151A) & Explosives (8330 & Picrates)	(1) 8oz. Glass Jar	Yes/ No	
SVOCs (8270C, SIM & 8151A), Explosives (8330 & Picrates) & PCBs (8082)	(1) 8oz. Glass Jar	Yes/ No	
Metals (6020) & Hg (7471A)	(1) 8oz. Glass Jar	Yes/ No	
Metals (6020), Hg (7471A), TOC, CEC & pH	(1) 8oz. Glass Jar	Yes/ No	
Dioxins/Furans	(1) _oz. Glass Jar	Yes/ No	

OBSERVATIONS / NOTES:

Soil Group No. PS-3

MAP:

See Figure 3-3 in the QAPP

Circle if Applicable:

MS/MSD ✓

Duplicate ID No.: —

Signature(s):

Ty Rojahn

Tetra Tech NUS, Inc.

SOIL SAMPLE LOG SHEET

Project Site Name: NSWC CRANE
Project No.: N9060 CTO 0279

[X] Surface Soil
[] Subsurface Soil
[] Sediment
[] Other:
[] QA Sample Type:

Sample ID No.: 16SS 16 0002
Sample Location: 16SB 16
Sampled By: M. Cochran/ T. Rojahn
C.O.C. No.: 0960 & 0962

Type of Sample:
[X] Low Concentration
[] High Concentration

GRAB SAMPLE DATA:

	Depth	Color	Description (Sand, Silt, Clay, Moisture, etc.)
Date: 3-27-03 Time: 1415 Method: DPT Monitor Reading (ppm): 1.5	0 - 2'	L BROWN	CLAYEY SILT DAMP

COMPOSITE SAMPLE DATA:

Date:	Time	Depth	Color	Description (Sand, Silt, Clay, Moisture, etc.)
Method:				
Monitor Readings (Range in ppm):				

SAMPLE COLLECTION INFORMATION:

Analysis	Container Requirements	Collected	Other
VOCs (8260B)	(3) Encore Samplers	Yes/ No	
VOCs (8015B)	(2) Encore Samplers	Yes/ No	
SVOCs (8270C, SIM & 8151A) & Explosives (8330 & Picrates)	(1) 8oz. Glass Jar	Yes/ No	
SVOCs (8270C, SIM & 8151A), Explosives (8330 & Picrates) & PCBs (8082)	(1) 8oz. Glass Jar	Yes/ No	
Metals (6020) & Hg (7471A)	(1) 8oz. Glass Jar	Yes/ No	
Metals (6020), Hg (7471A), TOC, CEC & pH	(1) 8oz. Glass Jar	Yes/ No	
Dioxins/Furans	(1) _oz. Glass Jar	Yes/ No	

OBSERVATIONS / NOTES:

Soil Group No. PS-3

MAP:

See Figure 3-3 in the QAPP

Circle if Applicable:

MS/MSD	Duplicate ID No.:
—	—

Signature(s):

Tetra Tech NUS, Inc.

SOIL SAMPLE LOG SHEET

Project Site Name: NSWC CRANE
Project No.: N9060 CTO 0279

[X] Surface Soil
[] Subsurface Soil
[] Sediment
[] Other:
[] QA Sample Type:

Sample ID No.: 16SS 17 0002
Sample Location: 16SB 17
Sampled By: M. Cochran/ T. Rojahn
C.O.C. No.: 0960 E 0962

Type of Sample:
[X] Low Concentration
[] High Concentration

GRAB SAMPLE DATA:

	Depth	Color	Description (Sand, Silt, Clay, Moisture, etc.)
Date: 3-27-03 Time: 1540 Method: DPT Monitor Reading (ppm): 1.5	0 - 2'	REDDISH BROWN	CLAYEY SILT

COMPOSITE SAMPLE DATA:

Date:	Time	Depth	Color	Description (Sand, Silt, Clay, Moisture, etc.)
Method:				
Monitor Readings (Range in ppm):				

SAMPLE COLLECTION INFORMATION:

Analysis	Container Requirements	Collected	Other
VOCs (8260B)	(3) Encore Samplers	Yes/ No	
VOCs (8015B)	(2) Encore Samplers	Yes/ No	
SVOCs (8270C, SIM & 8151A) & Explosives (8330 & Picrates)	(1) 8oz. Glass Jar	Yes/ No	
SVOCs (8270C, SIM & 8151A), Explosives (8330 & Picrates) & PCBs (8082)	(1) 8oz. Glass Jar	Yes/ No	
Metals (6020) & Hg (7471A)	(1) 8oz. Glass Jar	Yes/ No	
Metals (6020), Hg (7471A), TOC, CEC & pH	(1) 8oz. Glass Jar	Yes/ No	
Dioxins/Furans	(1) _oz. Glass Jar	Yes/ No	

OBSERVATIONS / NOTES:

Soil Group No. PS-3

MAP:

See Figure 3-3 in the QAPP

Circle if Applicable:

MS/MSD	Duplicate ID No.:
—	FD0327030Z

Signature(s):

Tetra Tech NUS, Inc.

SOIL SAMPLE LOG SHEET

Project Site Name: NSWC CRANE
Project No.: N9060 CTO 0279

[] Surface Soil
[X] Subsurface Soil
[] Sediment
[] Other:
[] QA Sample Type:

Sample ID No.: 16SB 170204
Sample Location: 16SB 17
Sampled By: M. Cochran / T. Rojahn
C.O.C. No.: 0960

Type of Sample:
[X] Low Concentration
[] High Concentration

GRAB SAMPLE DATA:

	Depth	Color	Description (Sand, Silt, Clay, Moisture, etc.)
Date: 3-27-03 Time: 1545 Method: DPT Monitor Reading (ppm): 1.5	2-4'	RED BROWN	SHALY SILTSTONE, WEATHERED

COMPOSITE SAMPLE DATA:

	Time	Depth	Color	Description (Sand, Silt, Clay, Moisture, etc.)
Date:				
Method:				
Monitor Readings (Range in ppm):				

SAMPLE COLLECTION INFORMATION:

Analysis	Container Requirements	Collected	Other
VOCs (8260B)	(3) Encore Samplers	Yes/ No	
VOCs (8015B)	(2) Encore Samplers	Yes/ No	
SVOCs (8270C, SIM & 8151A) & Explosives (8330 & Picrates)	(1) 8oz. Glass Jar	Yes/ No	
SVOCs (8270C, SIM & 8151A), Explosives (8330 & Picrates) & PCBs (8082)	(1) 8oz. Glass Jar	Yes/ No	
Metals (6020) & Hg (7471A)	(1) 8oz. Glass Jar	Yes/ No	
Metals (6020), Hg (7471A), TOC, CEC & pH	(1) 8oz. Glass Jar	Yes/ No	

OBSERVATIONS / NOTES:

Soil Group No. PBL-8

MAP:

See Figure 3-3 in the QAPP

Circle if Applicable:

MS/MSD	Duplicate ID No.:
—	—

Signature(s):

Tetra Tech NUS, Inc.

SOIL SAMPLE LOG SHEET

Project Site Name: NSWC CRANE
Project No.: N9060 CTO 0279

[X] Surface Soil
[] Subsurface Soil
[] Sediment
[] Other:
[] QA Sample Type:

Sample ID No.: 16SS 1B 0002
Sample Location: 16SB 1B
Sampled By: M. Cochran/ T. Rojahn
C.O.C. No.: 0961 & 0967

Type of Sample:
[X] Low Concentration
[] High Concentration

GRAB SAMPLE DATA:

	Depth	Color	Description (Sand, Silt, Clay, Moisture, etc.)
Date: 3-28-03 Time: 1030 Method: DPT Monitor Reading (ppm): 0	0 - 2'	BROWN	CLAYEY SILT, DAMP

COMPOSITE SAMPLE DATA:

Date:	Time	Depth	Color	Description (Sand, Silt, Clay, Moisture, etc.)
Method:				
Monitor Readings (Range in ppm):				

SAMPLE COLLECTION INFORMATION:

Analysis	Container Requirements	Collected	Other
VOCs (8260B)	(3) Encore Samplers	Yes/ No	
VOCs (8015B)	(2) Encore Samplers	Yes/ No	
SVOCs (8270C, SIM & 8151A) & Explosives (8330 & Picrates)	(1) 8oz. Glass Jar	Yes/ No	
SVOCs (8270C, SIM & 8151A), Explosives (8330 & Picrates) & PCBs (8082)	(1) 8oz. Glass Jar	Yes/ No	
Metals (6020) & Hg (7471A)	(1) 8oz. Glass Jar	Yes/ No	
Metals (6020), Hg (7471A), TOC, CEC & pH	(1) 8oz. Glass Jar	Yes/ No	
Dioxins/Furans	(1) _oz. Glass Jar	Yes/ No	

OBSERVATIONS / NOTES:

Soil Group No. PS-3

MAP:

See Figure 3-3 in the QAPP

Circle if Applicable:

MS/MSD —

Duplicate ID No.: —

Signature(s):

Tetra Tech NUS, Inc.

SOIL SAMPLE LOG SHEET

Project Site Name: NSWC CRANE
Project No.: N9060 CTO 0279

[] Surface Soil
[X] Subsurface Soil
[] Sediment
[] Other:
[] QA Sample Type:

Sample ID No.: 16SB 180203
Sample Location: 16SB 18
Sampled By: M. Cochran / T. Rojahn
C.O.C. No.: 0961

Type of Sample:
[X] Low Concentration
[] High Concentration

GRAB SAMPLE DATA:

	Depth	Color	Description (Sand, Silt, Clay, Moisture, etc.)
Date: 3-28-03 Time: 1035 Method: DPT Monitor Reading (ppm): 0	2-3'	BROWN	CLAYEY SILT, DAMP

COMPOSITE SAMPLE DATA:

	Time	Depth	Color	Description (Sand, Silt, Clay, Moisture, etc.)
Date:				
Method:				
Monitor Readings (Range in ppm):				

SAMPLE COLLECTION INFORMATION:

Analysis	Container Requirements	Collected	Other
VOCs (8260B)	(3) Encore Samplers	Yes/ No	
VOCs (8015B)	(2) Encore Samplers	Yes/ No	
SVOCs (8270C, SIM & 8151A) & Explosives (8330 & Picrates)	(1) 8oz. Glass Jar	Yes/ No	
SVOCs (8270C, SIM & 8151A), Explosives (8330 & Picrates) & PCBs (8082)	(1) 8oz. Glass Jar	Yes/ No	
Metals (6020) & Hg (7471A)	(1) 8oz. Glass Jar	Yes/ No	
Metals (6020), Hg (7471A), TOC, CEC & pH	(1) 8oz. Glass Jar	Yes/ No	

OBSERVATIONS / NOTES:

Soil Group No. PBL-8

MAP:

See Figure 3-3 in the QAPP

Circle if Applicable:

MS/MSD —

Duplicate ID No.: —

Signature(s):

Taylor

Tetra Tech NUS, Inc.

SOIL SAMPLE LOG SHEET

Project Site Name: NSWC CRANE
Project No.: N9060 CTO 0279

[X] Surface Soil
[] Subsurface Soil
[] Sediment
[] Other:
[] QA Sample Type:

Sample ID No.: 16SS 19 0002
Sample Location: 16SB 19
Sampled By: M. Cochran/ T. Rojahn
C.O.C. No.: 0961 & 0967

Type of Sample:
[X] Low Concentration
[] High Concentration

GRAB SAMPLE DATA:

	Depth	Color	Description (Sand, Silt, Clay, Moisture, etc.)
Date: 3-28-03 Time: 1040 Method: DPT Monitor Reading (ppm): 0	0 - 2'	GREY BROWN	CLAYEY SILT

COMPOSITE SAMPLE DATA:

Date:	Time	Depth	Color	Description (Sand, Silt, Clay, Moisture, etc.)
Method:				
Monitor Readings (Range in ppm):				

SAMPLE COLLECTION INFORMATION:

Analysis	Container Requirements	Collected	Other
VOCs (8260B)	(3) Encore Samplers	Yes/ No	
VOCs (8015B)	(2) Encore Samplers	Yes/ No	
SVOCs (8270C, SIM & 8151A) & Explosives (8330 & Picrates)	(1) 8oz. Glass Jar	Yes/ No	
SVOCs (8270C, SIM & 8151A), Explosives (8330 & Picrates) & PCBs (8082)	(1) 8oz. Glass Jar	Yes/ No	
Metals (6020) & Hg (7471A)	(1) 8oz. Glass Jar	Yes/ No	
Metals (6020), Hg (7471A), TOC, CEC & pH	(1) 8oz. Glass Jar	Yes/ No	
Dioxins/Furans	(1) _oz. Glass Jar	Yes/ No	

OBSERVATIONS / NOTES:

Soil Group No. PS-3

MAP:

See Figure 3-3 in the QAPP

Circle if Applicable:

MS/MSD —

Duplicate ID No.: —

Signature(s):

Terry Rojahn

Tetra Tech NUS, Inc.

SOIL SAMPLE LOG SHEET

Project Site Name: NSWC CRANE
Project No.: N9060 CTO 0279

[] Surface Soil
[X] Subsurface Soil
[] Sediment
[] Other:
[] QA Sample Type:

Sample ID No.: 16SB 190203
Sample Location: 16SB 19
Sampled By: M. Cochran / T. Rojahn
C.O.C. No.: 0961

Type of Sample:
[X] Low Concentration
[] High Concentration

GRAB SAMPLE DATA:

	Depth	Color	Description (Sand, Silt, Clay, Moisture, etc.)
Date: 3-28-03 Time: 1045 Method: DPT Monitor Reading (ppm): 0	2-3'	RED BROWN	CLAYEY SILT, DAMP

COMPOSITE SAMPLE DATA:

	Time	Depth	Color	Description (Sand, Silt, Clay, Moisture, etc.)
Date:				
Method:				
Monitor Readings (Range in ppm):				

SAMPLE COLLECTION INFORMATION:

Analysis	Container Requirements	Collected	Other
VOCs (8260B)	(3) Encore Samplers	Yes/ No	
VOCs (8015B)	(2) Encore Samplers	Yes/ No	
SVOCs (8270C, SIM & 8151A) & Explosives (8330 & Picrates)	(1) 8oz. Glass Jar	Yes/ No	
SVOCs (8270C, SIM & 8151A), Explosives (8330 & Picrates) & PCBs (8082)	(1) 8oz. Glass Jar	Yes/ No	
Metals (6020) & Hg (7471A)	(1) 8oz. Glass Jar	Yes/ No	
Metals (6020), Hg (7471A), TOC, CEC & pH	(1) 8oz. Glass Jar	Yes/ No	

OBSERVATIONS / NOTES:

Soil Group No. PBL-8

MAP:

See Figure 3-3 in the QAPP

Circle if Applicable:

MS/MSD —

Duplicate ID No.: —

Signature(s): Tony Rojahn

Tetra Tech NUS, Inc.

SOIL SAMPLE LOG SHEET

Project Site Name: NSWC CRANE
Project No.: N9060 CTO 0279

[X] Surface Soil
[] Subsurface Soil
[] Sediment
[] Other:
[] QA Sample Type:

Sample ID No.: 16SS 20 0002
Sample Location: 16SB 20
Sampled By: M. Cochran/ T. Rojahn
C.O.C. No.: 0991E0971

Type of Sample:
[X] Low Concentration
[] High Concentration

GRAB SAMPLE DATA:

Date: 3-28-03	Depth	Color	Description (Sand, Silt, Clay, Moisture, etc.)
Time: 1140	0 - 2'	GREY BROWN	CLAYEY SILT + GRAVEL
Method: DPT			
Monitor Reading (ppm): 0			

COMPOSITE SAMPLE DATA:

Date:	Time	Depth	Color	Description (Sand, Silt, Clay, Moisture, etc.)
Method:				
Monitor Readings (Range in ppm):				

SAMPLE COLLECTION INFORMATION:

Analysis	Container Requirements	Collected	Other
VOCs (8260B)	(3) Encore Samplers	Yes/ No	
VOCs (8015B)	(2) Encore Samplers	Yes/ No	
SVOCs (8270C, SIM & 8151A) & Explosives (8330 & Picrates)	(1) 8oz. Glass Jar	Yes/ No	
SVOCs (8270C, SIM & 8151A), Explosives (8330 & Picrates) & PCBs (8082)	(1) 8oz. Glass Jar	Yes/ No	
Metals (6020) & Hg (7471A)	(1) 8oz. Glass Jar	Yes/ No	
Metals (6020), Hg (7471A), TOC, CEC & pH	(1) 8oz. Glass Jar	Yes/ No	
Dioxins/Furans	(1) _oz. Glass Jar	Yes/ No	

OBSERVATIONS / NOTES:

Soil Group No. PS-3

MAP:

See Figure 3-3 in the QAPP

Circle if Applicable:

MS/MSD

Duplicate ID No.: —

Signature(s):

Terry Rojahn

Tetra Tech NUS, Inc.

SOIL SAMPLE LOG SHEET

Project Site Name: NSWC CRANE
Project No.: N9060 CTO 0279

[X] Surface Soil
[] Subsurface Soil
[] Sediment
[] Other:
[] QA Sample Type:

Sample ID No.: 16SS 21 0002
Sample Location: 16SB 21
Sampled By: M. Cochran/ T. Rojahn
C.O.C. No.: 0961 & 0967

Type of Sample:
[X] Low Concentration
[] High Concentration

GRAB SAMPLE DATA:

	Depth	Color	Description (Sand, Silt, Clay, Moisture, etc.)
Date: 3-28 Time: 1100 Method: DPT Monitor Reading (ppm): 0	0 - 2'	BROWN	DAMP CLAYEY SILT + GRAVEL

COMPOSITE SAMPLE DATA:

Date:	Time	Depth	Color	Description (Sand, Silt, Clay, Moisture, etc.)
Method:				
Monitor Readings (Range in ppm):				

SAMPLE COLLECTION INFORMATION:

Analysis	Container Requirements	Collected	Other
VOCs (8260B)	(3) Encore Samplers	Yes/ No	
VOCs (8015B)	(2) Encore Samplers	Yes/ No	
SVOCs (8270C, SIM & 8151A) & Explosives (8330 & Picrates)	(1) 8oz. Glass Jar	Yes/ No	
SVOCs (8270C, SIM & 8151A), Explosives (8330 & Picrates) & PCBs (8082)	(1) 8oz. Glass Jar	Yes/ No	
Metals (6020) & Hg (7471A)	(1) 8oz. Glass Jar	Yes/ No	
Metals (6020), Hg (7471A), TOC, CEC & pH	(1) 8oz. Glass Jar	Yes/ No	
Dioxins/Furans	(1) _oz. Glass Jar	Yes/ No	

OBSERVATIONS / NOTES:

Soil Group No. PS-3

MAP:

See Figure 3-3 in the QAPP

Circle if Applicable:

MS/MSD

Duplicate ID No.: —

Signature(s): Terry Rojahn

Tetra Tech NUS, Inc.

SOIL SAMPLE LOG SHEET

Project Site Name: NSWC CRANE
Project No.: N9060 CTO 0279

[X] Surface Soil
[] Subsurface Soil
[] Sediment
[] Other:
[] QA Sample Type:

Sample ID No.: 16SS 22 0002
Sample Location: 16SB 22
Sampled By: M. Cochran/ T. Rojahn
C.O.C. No.: 0972 & 0967

Type of Sample:
[X] Low Concentration
[] High Concentration

GRAB SAMPLE DATA:

	Depth	Color	Description (Sand, Silt, Clay, Moisture, etc.)
Date: 3-28-03 Time: 910 Method: DPT Monitor Reading (ppm): 0	0 - 2'	DARK BROWN	CLAYEY SILT; DAMP

COMPOSITE SAMPLE DATA:

Date:	Time	Depth	Color	Description (Sand, Silt, Clay, Moisture, etc.)
Method:				
Monitor Readings (Range in ppm):				

SAMPLE COLLECTION INFORMATION:

Analysis	Container Requirements	Collected	Other
VOCs (8260B)	(3) Encore Samplers	Yes/ No	
VOCs (8015B)	(2) Encore Samplers	Yes/ No	
SVOCs (8270C, SIM & 8151A) & Explosives (8330 & Picrates)	(1) 8oz. Glass Jar	Yes/ No	
SVOCs (8270C, SIM & 8151A), Explosives (8330 & Picrates) & PCBs (8082)	(1) 8oz. Glass Jar	Yes/ No	
Metals (6020) & Hg (7471A)	(1) 8oz. Glass Jar	Yes/ No	
Metals (6020), Hg (7471A), TOC, CEC & pH	(1) 8oz. Glass Jar	Yes/ No	
Dioxins/Furans	(1) _oz. Glass Jar	Yes/ No	

OBSERVATIONS / NOTES:

Soil Group No. PS-3

MAP:

See Figure 3-3 in the QAPP

Circle if Applicable:

MS/MSD	Duplicate ID No.:
—	—

Signature(s): [illegible]

Tetra Tech NUS, Inc.

SOIL SAMPLE LOG SHEET

Project Site Name: NSWC CRANE
Project No.: N9060 CTO 0279

[] Surface Soil
[X] Subsurface Soil
[] Sediment
[] Other:
[] QA Sample Type:

Sample ID No.: 16SB 220203
Sample Location: 16SB 22
Sampled By: M. Cochran / T. Rojahn
C.O.C. No.: 0972

Type of Sample:
[X] Low Concentration
[] High Concentration

GRAB SAMPLE DATA:

	Depth	Color	Description (Sand, Silt, Clay, Moisture, etc.)
Date: 3-28-03 Time: 915 Method: DPT Monitor Reading (ppm): 0	2-3'	LIGHT BROWN	CLAYEY SILT, DAMP

COMPOSITE SAMPLE DATA:

	Time	Depth	Color	Description (Sand, Silt, Clay, Moisture, etc.)
Date:				
Method:				
Monitor Readings (Range in ppm):				

SAMPLE COLLECTION INFORMATION:

Analysis	Container Requirements	Collected	Other
VOCs (8260B)	(3) Encore Samplers	Yes/ No	
VOCs (8015B)	(2) Encore Samplers	Yes/ No	
SVOCs (8270C, SIM & 8151A) & Explosives (8330 & Picrates)	(1) 8oz. Glass Jar	Yes/ No	
SVOCs (8270C, SIM & 8151A), Explosives (8330 & Picrates) & PCBs (8082)	(1) 8oz. Glass Jar	Yes/ No	
Metals (6020) & Hg (7471A)	(1) 8oz. Glass Jar	Yes/ No	
Metals (6020), Hg (7471A), TOC, CEC & pH	(1) 8oz. Glass Jar	Yes/ No	

OBSERVATIONS / NOTES:

Soil Group No. PBL-8

MAP:

See Figure 3-3 in the QAPP

Circle if Applicable:

MS/MSD	Duplicate ID No.:
—	—

Signature(s):

Tetra Tech NUS, Inc.

SOIL SAMPLE LOG SHEET

Project Site Name: NSWC CRANE
Project No.: N9060 CTO 0279

[X] Surface Soil
[] Subsurface Soil
[] Sediment
[] Other:
[] QA Sample Type:

Sample ID No.: 16SS 23 0002
Sample Location: 16SB 23
Sampled By: M. Cochran/ T. Rojahn
C.O.C. No.: 0961 & 0967 DUP 0981

Type of Sample:
[X] Low Concentration
[] High Concentration

GRAB SAMPLE DATA:

	Depth	Color	Description (Sand, Silt, Clay, Moisture, etc.)
Date: 3-28-03 Time: 1000 Method: DPT Monitor Reading (ppm): 0	0 - 2'	RED BROWN	CLAYEY SILT, DAMP

COMPOSITE SAMPLE DATA:

Date:	Time	Depth	Color	Description (Sand, Silt, Clay, Moisture, etc.)
Method:				
Monitor Readings (Range in ppm):				

SAMPLE COLLECTION INFORMATION:

Analysis	Container Requirements	Collected	Other
VOCs (8260B)	(3) Encore Samplers	Yes/ No	
VOCs (8015B)	(2) Encore Samplers	Yes/ No	
SVOCs (8270C, SIM & 8151A) & Explosives (8330 & Picrates)	(1) 8oz. Glass Jar	Yes/ No	
SVOCs (8270C, SIM & 8151A), Explosives (8330 & Picrates) & PCBs (8082)	(1) 8oz. Glass Jar	Yes/ No	
Metals (6020) & Hg (7471A)	(1) 8oz. Glass Jar	Yes/ No	
Metals (6020), Hg (7471A), TOC, CEC & pH	(1) 8oz. Glass Jar	Yes/ No	
Dioxins/Furans	(1) _oz. Glass Jar	Yes/ No	

OBSERVATIONS / NOTES:

Soil Group No. PS-3

MAP:

See Figure 3-3 in the QAPP

Circle if Applicable:

MS/MSD	Duplicate ID No.:
—	FD 0328 0301

Signature(s):

Tetra Tech NUS, Inc.

SOIL SAMPLE LOG SHEET

Project Site Name: NSWC CRANE
Project No.: N9060 CTO 0279

[] Surface Soil
[X] Subsurface Soil
[] Sediment
[] Other:
[] QA Sample Type:

Sample ID No.: 16SB 230203
Sample Location: 16SB 23
Sampled By: M. Cochran / T. Rojahn
C.O.C. No.: 0961 & 0951 (pup)

Type of Sample:
[X] Low Concentration
[] High Concentration

GRAB SAMPLE DATA:

	Depth	Color	Description (Sand, Silt, Clay, Moisture, etc.)
Date: 3-28-03 Time: 1005 Method: DPT Monitor Reading (ppm): 0	2-3'	RED BROWN	CLAYEY SILT, DAMP

COMPOSITE SAMPLE DATA:

	Time	Depth	Color	Description (Sand, Silt, Clay, Moisture, etc.)
Date:				
Method:				
Monitor Readings (Range in ppm):				

SAMPLE COLLECTION INFORMATION:

Analysis	Container Requirements	Collected	Other
VOCs (8260B)	(3) Encore Samplers	Yes/ No	
VOCs (8015B)	(2) Encore Samplers	Yes/ No	
SVOCs (8270C, SIM & 8151A) & Explosives (8330 & Picrates)	(1) 8oz. Glass Jar	Yes/ No	
SVOCs (8270C, SIM & 8151A), Explosives (8330 & Picrates) & PCBs (8082)	(1) 8oz. Glass Jar	Yes/ No	
Metals (6020) & Hg (7471A)	(1) 8oz. Glass Jar	Yes/ No	
Metals (6020), Hg (7471A), TOC, CEC & pH	(1) 8oz. Glass Jar	Yes/ No	

OBSERVATIONS / NOTES:

Soil Group No. PBL-8

MAP:

See Figure 3-3 in the QAPP

Circle if Applicable:

MS/MSD —

Duplicate ID No.: FD 03280302

Signature(s):

Tetra Tech NUS, Inc.

SOIL SAMPLE LOG SHEET

Project Site Name: NSWC CRANE
Project No.: N9060 CTO 0279

[X] Surface Soil
[] Subsurface Soil
[] Sediment
[] Other:
[] QA Sample Type:

Sample ID No.: 16SS 240002
Sample Location: 16SB 24
Sampled By: M. Cochran/ T. Rojahn
C.O.C. No.: 0961 & 0967

Type of Sample:
[X] Low Concentration
[] High Concentration

GRAB SAMPLE DATA:

Date: 3-28-03	Depth	Color	Description (Sand, Silt, Clay, Moisture, etc.)
Time: 940	0 - 2'	RED BROWN	CLAYEY SILT, DAMP
Method: DPT			
Monitor Reading (ppm): 0			

COMPOSITE SAMPLE DATA:

Date:	Time	Depth	Color	Description (Sand, Silt, Clay, Moisture, etc.)
Method:				
Monitor Readings (Range in ppm):				

SAMPLE COLLECTION INFORMATION:

Analysis	Container Requirements	Collected	Other
VOCs (8260B)	(3) Encore Samplers	Yes/ No	
VOCs (8015B)	(2) Encore Samplers	Yes/ No	
SVOCs (8270C, SIM & 8151A) & Explosives (8330 & Picrates)	(1) 8oz. Glass Jar	Yes/ No	
SVOCs (8270C, SIM & 8151A), Explosives (8330 & Picrates) & PCBs (8082)	(1) 8oz. Glass Jar	Yes/ No	
Metals (6020) & Hg (7471A)	(1) 8oz. Glass Jar	Yes/ No	
Metals (6020); Hg (7471A), TOC, CEC & pH	(1) 8oz. Glass Jar	Yes/ No	
Dioxins/Furans	(1) _oz. Glass Jar	Yes/ No	

OBSERVATIONS / NOTES:

Soil Group No. PS-3

MAP:

See Figure 3-3 in the QAPP

Circle if Applicable:

MS/MSD —

Duplicate ID No.: —

Signature(s):

Tej Rojah

Tetra Tech NUS, Inc.

SOIL SAMPLE LOG SHEET

Project Site Name: NSWC CRANE
Project No.: N9060 CTO 0279

[] Surface Soil
[X] Subsurface Soil
[] Sediment
[] Other:
[] QA Sample Type:

Sample ID No.: 16SB 240203
Sample Location: 16SB 24
Sampled By: M. Cochran / T. Rojahn
C.O.C. No.: 0961

Type of Sample:
[X] Low Concentration
[] High Concentration

GRAB SAMPLE DATA:

	Depth	Color	Description (Sand, Silt, Clay, Moisture, etc.)
Date: 3-28-03 Time: 945 Method: DPT Monitor Reading (ppm): 0	2-3'	RED BROWN	CLAYEY SILT, DAMP.

COMPOSITE SAMPLE DATA:

	Time	Depth	Color	Description (Sand, Silt, Clay, Moisture, etc.)
Date:				
Method:				
Monitor Readings (Range in ppm):				

SAMPLE COLLECTION INFORMATION:

Analysis	Container Requirements	Collected	Other
VOCs (8260B)	(3) Encore Samplers	Yes/ No	
VOCs (8015B)	(2) Encore Samplers	Yes/ No	
SVOCs (8270C, SIM & 8151A) & Explosives (8330 & Picrates)	(1) 8oz. Glass Jar	Yes/ No	
SVOCs (8270C, SIM & 8151A), Explosives (8330 & Picrates) & PCBs (8082)	(1) 8oz. Glass Jar	Yes/ No	
Metals (6020) & Hg (7471A)	(1) 8oz. Glass Jar	Yes/ No	
Metals (6020), Hg (7471A), TOC, CEC & pH	(1) 8oz. Glass Jar	Yes/ No	

OBSERVATIONS / NOTES:

Soil Group No. PBL-8

MAP:

See Figure 3-3 in the QAPP

Circle if Applicable:

MS/MSD	Duplicate ID No.:
—	—

Signature(s):

Terry Lopat

Tetra Tech NUS, Inc.

SOIL SAMPLE LOG SHEET

Project Site Name: NSWC CRANE
Project No.: N9060 CTO 0279

[X] Surface Soil
[] Subsurface Soil
[] Sediment
[] Other:
[] QA Sample Type:

Sample ID No.: 16SS 25 0002
Sample Location: 16SB 25
Sampled By: M. Cochran/ T. Rojahn
C.O.C. No.: 0972 E 0967

Type of Sample:
[X] Low Concentration
[] High Concentration

GRAB SAMPLE DATA:

	Depth	Color	Description (Sand, Silt, Clay, Moisture, etc.)
Date: 3-28-03 Time: 930 Method: DPT Monitor Reading (ppm): 0	0 - 2'	RED BROWN	CLAYEY SILT, DAMP

COMPOSITE SAMPLE DATA:

Date:	Time	Depth	Color	Description (Sand, Silt, Clay, Moisture, etc.)
Method:				
Monitor Readings (Range in ppm):				

SAMPLE COLLECTION INFORMATION:

Analysis	Container Requirements	Collected	Other
VOCs (8260B)	(3) Encore Samplers	Yes/ No	
VOCs (8015B)	(2) Encore Samplers	Yes/ No	
SVOCs (8270C, SIM & 8151A) & Explosives (8330 & Picrates)	(1) 8oz. Glass Jar	Yes/ No	
SVOCs (8270C, SIM & 8151A), Explosives (8330 & Picrates) & PCBs (8082)	(1) 8oz. Glass Jar	Yes/ No	
Metals (6020) & Hg (7471A)	(1) 8oz. Glass Jar	Yes/ No	
Metals (6020), Hg (7471A), TOC, CEC & pH	(1) 8oz. Glass Jar	Yes/ No	
Dioxins/Furans	(1) _oz. Glass Jar	Yes/ No	

OBSERVATIONS / NOTES:

Soil Group No. PS-3

MAP:

See Figure 3-3 in the QAPP

Circle if Applicable:

MS/MSD	Duplicate ID No.:
—	—

Signature(s):

Tetra Tech NUS, Inc.

SOIL SAMPLE LOG SHEET

Project Site Name: NSWC CRANE
Project No.: N9060 CTO 0279

[] Surface Soil
[X] Subsurface Soil
[] Sediment
[] Other:
[] QA Sample Type:

Sample ID No.: 16SB 25 0203
Sample Location: 16SB 25
Sampled By: M. Cochran / T. Rojahn
C.O.C. No.: 0961

Type of Sample:
[X] Low Concentration
[] High Concentration

GRAB SAMPLE DATA:

	Depth	Color	Description (Sand, Silt, Clay, Moisture, etc.)
Date: 3-28-03 Time: 935 Method: DPT Monitor Reading (ppm): 0	2-3'	RED BROWN	CLAYEY SILT, DAMP

COMPOSITE SAMPLE DATA:

Date:	Time	Depth	Color	Description (Sand, Silt, Clay, Moisture, etc.)
Method:				
Monitor Readings (Range in ppm):				

SAMPLE COLLECTION INFORMATION:

Analysis	Container Requirements	Collected	Other
VOCs (8260B)	(3) Encore Samplers	Yes/ No	
VOCs (8015B)	(2) Encore Samplers	Yes/ No	
SVOCs (8270C, SIM & 8151A) & Explosives (8330 & Picrates)	(1) 8oz. Glass Jar	Yes/ No	
SVOCs (8270C, SIM & 8151A), Explosives (8330 & Picrates) & PCBs (8082)	(1) 8oz. Glass Jar	Yes/ No	
Metals (6020) & Hg (7471A)	(1) 8oz. Glass Jar	Yes/ No	
Metals (6020), Hg (7471A), TOC, CEC & pH	(1) 8oz. Glass Jar	Yes/ No	

OBSERVATIONS / NOTES:

Soil Group No. PBL-8

MAP:

See Figure 3-3 in the QAPP

Circle if Applicable:

MS/MSD —

Duplicate ID No.: —

Signature(s):

Tetra Tech NUS, Inc.

SOIL SAMPLE LOG SHEET

Project Site Name: NSWC CRANE
Project No.: N9060 CTO 0279

[X] Surface Soil
[] Subsurface Soil
[] Sediment
[] Other:
[] QA Sample Type:

Sample ID No.: 16SS 26 0002
Sample Location: 16SB 26
Sampled By: ~~M. Cochran~~/ T. Rojahn/B. Balkove
C.O.C. No.: 0986 & 0985

Type of Sample:
[X] Low Concentration
[] High Concentration

GRAB SAMPLE DATA:

	Depth	Color	Description (Sand, Silt, Clay, Moisture, etc.)
Date: 4/9/03 Time: 1038 Method: ~~DPT~~ Rotosonic Monitor Reading (ppm): 0.0	0 - 2'	BROWN & YELLOW ORANGE	CLAY + SILTY SAND W/ S.S. FRAG

COMPOSITE SAMPLE DATA:

Date:	Time	Depth	Color	Description (Sand, Silt, Clay, Moisture, etc.)
Method:				
Monitor Readings (Range in ppm):				

SAMPLE COLLECTION INFORMATION:

Analysis	Container Requirements	Collected	Other
VOCs (8260B)	(3) (3) Encore Samplers	Yes/No	
VOCs (8015B)	(3) (2) Encore Samplers	Yes/No	
SVOCs (8270C, SIM & 8151A) & Explosives (8330 & Picrates)	~~(3)~~ 7 (1) 8oz. Glass Jar	Yes/No	
SVOCs (8270C, SIM & 8151A), Explosives (8330 & Picrates) & PCBs (8082)	(3) (1) 8oz. Glass Jar	Yes/No	
Metals (6020) & Hg (7471A)	(3) (1) 8oz. Glass Jar	Yes/No	
Metals (6020), Hg (7471A), TOC, CEC & pH	(1) 8oz. Glass Jar	Yes/No	
Dioxins/Furans	(1) _oz. Glass Jar	Yes/No	

OBSERVATIONS / NOTES:

Soil Group No. PS - 3

MAP:

See Figure 3-3 in the QAPP

Circle if Applicable:

MS/MSD ALL

Duplicate ID No.: ALL
F004090302

Signature(s):

Robert Balkove

Tetra Tech NUS, Inc.

SOIL SAMPLE LOG SHEET

Project Site Name: NSWC CRANE
Project No.: N9060 CTO 0279

[] Surface Soil
[X] Subsurface Soil
[] Sediment
[] Other:
[] QA Sample Type:

Sample ID No.: 16SB260204
Sample Location: 16SB26
Sampled By: ~~M. Cochran~~ / T. Rojahn / R. Balkovic
C.O.C. No.: 0986

Type of Sample:
[X] Low Concentration
[] High Concentration

GRAB SAMPLE DATA:

	Depth	Color	Description (Sand, Silt, Clay, Moisture, etc.)
Date: 4/9/03 Time: 1045 Method: ~~DPT~~ PowerSonic Monitor Reading (ppm): 0.0	2'-4'	YELLOW & LT. GRAY	SILTY SAND W/ S.S. FRAGS

COMPOSITE SAMPLE DATA:

	Time	Depth	Color	Description (Sand, Silt, Clay, Moisture, etc.)
Date:				
Method:				
Monitor Readings (Range in ppm):				

SAMPLE COLLECTION INFORMATION:

Analysis	Container Requirements	Collected	Other
VOCs (8260B)	(3) Encore Samplers	Yes/No	
VOCs (8015B)	(2) Encore Samplers	Yes/No	
SVOCs (8270C, SIM & 8151A) & Explosives (8330 & Picrates)	(1) 8oz. Glass Jar	Yes/No	
SVOCs (8270C, SIM & 8151A), Explosives (8330 & Picrates) & PCBs (8082)	(1) 8oz. Glass Jar	Yes/No	
Metals (6020) & Hg (7471A)	(1) 8oz. Glass Jar	Yes/No	
Metals (6020), Hg (7471A), TOC, CEC & pH	(1) 8oz. Glass Jar	Yes/No	

OBSERVATIONS / NOTES:

Soil Group No. PBS-9

MAP:

See Figure 3-3 in the QAPP

Circle if Applicable:

MS/MSD

Duplicate ID No.: FD04040303

Signature(s): Robert Balkovic

Tetra Tech NUS, Inc.

SOIL SAMPLE LOG SHEET

Project Site Name: NSWC CRANE
Project No.: N9060 CTO 0279

[X] Surface Soil
[] Subsurface Soil
[] Sediment
[] Other:
[] QA Sample Type:

Sample ID No.: 16SS 27 0002
Sample Location: 16SB 27
Sampled By: M. Cochran/ T. Rojahn
C.O.C. No.: 0961 & 0967

Type of Sample:
[X] Low Concentration
[] High Concentration

GRAB SAMPLE DATA:

	Depth	Color	Description (Sand, Silt, Clay, Moisture, etc.)
Date: 3-28-03 Time: 1120 Method: DPT Monitor Reading (ppm): 0	0 - 2'	BROWN	DAMP CLAYEY SILT W/ RK FRAGS

COMPOSITE SAMPLE DATA:

Date:	Time	Depth	Color	Description (Sand, Silt, Clay, Moisture, etc.)
Method:				
Monitor Readings (Range in ppm):				

SAMPLE COLLECTION INFORMATION:

Analysis	Container Requirements	Collected	Other
VOCs (8260B)	(3) Encore Samplers	Yes/ No	
VOCs (8015B)	(2) Encore Samplers	Yes/ No	
SVOCs (8270C, SIM & 8151A) & Explosives (8330 & Picrates)	(1) 8oz. Glass Jar	Yes/ No	
SVOCs (8270C, SIM & 8151A), Explosives (8330 & Picrates) & PCBs (8082)	(1) 8oz. Glass Jar	Yes/ No	
Metals (6020) & Hg (7471A)	(1) 8oz. Glass Jar	Yes/ No	
Metals (6020), Hg (7471A), TOC, CEC & pH	(1) 8oz. Glass Jar	Yes/ No	
Dioxins/Furans	(1) _oz. Glass Jar	Yes/ No	

OBSERVATIONS / NOTES:

Soil Group No. PS-3

MAP:

See Figure 3-3 in the QAPP

Circle if Applicable:

MS/MSD

Duplicate ID No.:

Signature(s):

Tetra Tech NUS, Inc.

SOIL SAMPLE LOG SHEET

Project Site Name: NSWC CRANE
Project No.: N9060 CTO 0279

[] Surface Soil
[X] Subsurface Soil
[] Sediment
[] Other:
[] QA Sample Type:

Sample ID No.: 16SB 27 0203
Sample Location: 16SB 27
Sampled By: M. Cochran / T. Rojahn
C.O.C. No.: 0961

Type of Sample:
[X] Low Concentration
[] High Concentration

GRAB SAMPLE DATA:

	Depth	Color	Description (Sand, Silt, Clay, Moisture, etc.)
Date: 3-28-03 Time: 1125 Method: DPT Monitor Reading (ppm): 0	2-3'	BROWN	CLAYEY SILT, DAMP

COMPOSITE SAMPLE DATA:

Date:	Time	Depth	Color	Description (Sand, Silt, Clay, Moisture, etc.)
Method:				
Monitor Readings (Range in ppm):				

SAMPLE COLLECTION INFORMATION:

Analysis	Container Requirements	Collected	Other
VOCs (8260B)	(3) Encore Samplers	Yes/ No	
VOCs (8015B)	(2) Encore Samplers	Yes/ No	
SVOCs (8270C, SIM & 8151A) & Explosives (8330 & Picrates)	(1) 8oz. Glass Jar	Yes/ No	
SVOCs (8270C, SIM & 8151A), Explosives (8330 & Picrates) & PCBs (8082)	(1) 8oz. Glass Jar	Yes/ No	
Metals (6020) & Hg (7471A)	(1) 8oz. Glass Jar	Yes/ No	
Metals (6020), Hg (7471A), TOC, CEC & pH	(1) 8oz. Glass Jar	Yes/ No	

OBSERVATIONS / NOTES:

Soil Group No. PBL-8

MAP:

See Figure 3-3 in the QAPP

Circle if Applicable:

MS/MSD

Duplicate ID No.:

Signature(s):

Tetra Tech NUS, Inc.

SOIL SAMPLE LOG SHEET

Project Site Name: NSWC CRANE
Project No.: N9060 CTO 0279

[X] Surface Soil
[] Subsurface Soil
[] Sediment
[] Other:
[] QA Sample Type:

Sample ID No.: 16SS 28 0002
Sample Location: 16SB 28
Sampled By: M. Cochran/ T. Rojahn
C.O.C. No.: 0961 & 0971

Type of Sample:
[X] Low Concentration
[] High Concentration

GRAB SAMPLE DATA:

	Depth	Color	Description (Sand, Silt, Clay, Moisture, etc.)
Date: 3-28-03 Time: 1130 Method: DPT Monitor Reading (ppm): 0	0 - 2'	BROWN	CLAYEY SILT, DAMP

COMPOSITE SAMPLE DATA:

Date:	Time	Depth	Color	Description (Sand, Silt, Clay, Moisture, etc.)
Method:				
Monitor Readings (Range in ppm):				

SAMPLE COLLECTION INFORMATION:

Analysis	Container Requirements	Collected	Other
VOCs (8260B)	(3) Encore Samplers	Yes/ No	
VOCs (8015B)	(2) Encore Samplers	Yes/ No	
SVOCs (8270C, SIM & 8151A) & Explosives (8330 & Picrates)	(1) 8oz. Glass Jar	Yes/ No	
SVOCs (8270C, SIM & 8151A), Explosives (8330 & Picrates) & PCBs (8082)	(1) 8oz. Glass Jar	Yes/ No	
Metals (6020) & Hg (7471A)	(1) 8oz. Glass Jar	Yes/ No	
Metals (6020), Hg (7471A), TOC, CEC & pH	(1) 8oz. Glass Jar	Yes/ No	
Dioxins/Furans	(1) _oz. Glass Jar	Yes/ No	

OBSERVATIONS / NOTES:

Soil Group No. PS-3

MAP:

See Figure 3-3 in the QAPP

Circle if Applicable:

MS/MSD —

Duplicate ID No.: —

Signature(s):

Tetra Tech NUS, Inc.

SOIL SAMPLE LOG SHEET

Project Site Name: NSWC CRANE
Project No.: N9060 CTO 0279

[] Surface Soil
[X] Subsurface Soil
[] Sediment
[] Other:
[] QA Sample Type:

Sample ID No.: 16SB 280205
Sample Location: 16SB 28
Sampled By: M. Cochran / T. Rojahn
C.O.C. No.: 0981

Type of Sample:
[X] Low Concentration
[] High Concentration

GRAB SAMPLE DATA:

	Depth	Color	Description (Sand, Silt, Clay, Moisture, etc.)
Date: 3-28-03 Time: 1135 Method: DPT Monitor Reading (ppm): 0	2-3'	BROWN	SANDY SILT, DAMP

COMPOSITE SAMPLE DATA:

	Time	Depth	Color	Description (Sand, Silt, Clay, Moisture, etc.)
Date:				
Method:				
Monitor Readings (Range in ppm):				

SAMPLE COLLECTION INFORMATION:

Analysis	Container Requirements	Collected	Other
VOCs (8260B)	(3) Encore Samplers	Yes/ No	
VOCs (8015B)	(2) Encore Samplers	Yes/ No	
SVOCs (8270C, SIM & 8151A) & Explosives (8330 & Picrates)	(1) 8oz. Glass Jar	Yes/ No	
SVOCs (8270C, SIM & 8151A), Explosives (8330 & Picrates) & PCBs (8082)	(1) 8oz. Glass Jar	Yes/ No	
Metals (6020) & Hg (7471A)	(1) 8oz. Glass Jar	Yes/ No	
Metals (6020), Hg (7471A), TOC, CEC & pH	(1) 8oz. Glass Jar	Yes/ No	

OBSERVATIONS / NOTES:

Soil Group No. PBL-8

MAP:

See Figure 3-3 in the QAPP

Circle if Applicable:

MS/MSD

Duplicate ID No.:

Signature(s):

Tetra Tech NUS, Inc.

SOIL SAMPLE LOG SHEET

Project Site Name: NSWC CRANE
Project No.: N9060 CTO 0279

[X] Surface Soil
[] Subsurface Soil
[] Sediment
[] Other:
[] QA Sample Type:

Sample ID No.: 16SS 29 0002
Sample Location: 16SB 29
Sampled By: M. Cochran/ T. Rojahn
C.O.C. No.: 0972 & 0967

Type of Sample:
[X] Low Concentration
[] High Concentration

GRAB SAMPLE DATA:

	Depth	Color	Description (Sand, Silt, Clay, Moisture, etc.)
Date: 3-28-03 Time: 900 Method: DPT Monitor Reading (ppm): 0	0 - 2'	RED BROWN	CLAYEY SILT, DAMP

COMPOSITE SAMPLE DATA:

Date:	Time	Depth	Color	Description (Sand, Silt, Clay, Moisture, etc.)
Method:				
Monitor Readings (Range in ppm):				

SAMPLE COLLECTION INFORMATION:

Analysis	Container Requirements	Collected	Other
VOCs (8260B)	(3) Encore Samplers	Yes/ No	
VOCs (8015B)	(2) Encore Samplers	Yes/ No	
SVOCs (8270C, SIM & 8151A) & Explosives (8330 & Picrates)	(1) 8oz. Glass Jar	Yes/ No	
SVOCs (8270C, SIM & 8151A), Explosives (8330 & Picrates) & PCBs (8082)	(1) 8oz. Glass Jar	Yes/ No	
Metals (6020) & Hg (7471A)	(1) 8oz. Glass Jar	Yes/ No	
Metals (6020), Hg (7471A), TOC, CEC & pH	(1) 8oz. Glass Jar	Yes/ No	
Dioxins/Furans	(1) _oz. Glass Jar	Yes/ No	

OBSERVATIONS / NOTES:

Soil Group No. PS-3

MAP:

See Figure 3-3 in the QAPP

Circle if Applicable:

MS/MSD

Duplicate ID No.:

Signature(s):

Tetra Tech NUS, Inc.

SOIL SAMPLE LOG SHEET

Project Site Name: NSWC CRANE
Project No.: N9060 CTO 0279

[] Surface Soil
[X] Subsurface Soil
[] Sediment
[] Other:
[] QA Sample Type:

Sample ID No.: 16SB 290203
Sample Location: 16SB 29
Sampled By: M. Cochran / T. Rojahn
C.O.C. No.: 0972

Type of Sample:
[X] Low Concentration
[] High Concentration

GRAB SAMPLE DATA:

	Depth	Color	Description (Sand, Silt, Clay, Moisture, etc.)
Date: 3-28-03 Time: 905 Method: DPT Monitor Reading (ppm): 0	2-3'	RED BROWN	CLAYEY SILT, DAMP

COMPOSITE SAMPLE DATA:

	Time	Depth	Color	Description (Sand, Silt, Clay, Moisture, etc.)
Date:				
Method:				
Monitor Readings (Range in ppm):				

SAMPLE COLLECTION INFORMATION:

Analysis	Container Requirements	Collected	Other
VOCs (8260B)	(3) Encore Samplers	Yes/ No	
VOCs (8015B)	(2) Encore Samplers	Yes/ No	
SVOCs (8270C, SIM & 8151A) & Explosives (8330 & Picrates)	(1) 8oz. Glass Jar	Yes/ No	
SVOCs (8270C, SIM & 8151A), Explosives (8330 & Picrates) & PCBs (8082)	(1) 8oz. Glass Jar	Yes/ No	
Metals (6020) & Hg (7471A)	(1) 8oz. Glass Jar	Yes/ No	
Metals (6020), Hg (7471A), TOC, CEC & pH	(1) 8oz. Glass Jar	Yes/ No	

OBSERVATIONS / NOTES:

Soil Group No. PBL-8

MAP:

See Figure 3-3 in the QAPP

Circle if Applicable:

MS/MSD —

Duplicate ID No.: —

Signature(s):

Tetra Tech NUS, Inc.

SOIL SAMPLE LOG SHEET

Project Site Name: NSWC CRANE
Project No.: N9060 CTO 0279

[X] Surface Soil
[] Subsurface Soil
[] Sediment
[] Other:
[] QA Sample Type:

Sample ID No.: 16SS 30 0002
Sample Location: 16SB 30
Sampled By: M. Cochran/ T. Rojahn
C.O.C. No.: 0972 E0967

Type of Sample:
[X] Low Concentration
[] High Concentration

GRAB SAMPLE DATA:

	Depth	Color	Description (Sand, Silt, Clay, Moisture, etc.)
Date: 3-28-03 Time: 840 Method: DPT Monitor Reading (ppm): 0	0 - 2'	RED BROWN	CLAYEY SILT, DAMP

COMPOSITE SAMPLE DATA:

Date:	Time	Depth	Color	Description (Sand, Silt, Clay, Moisture, etc.)
Method:				
Monitor Readings (Range in ppm):				

SAMPLE COLLECTION INFORMATION:

Analysis	Container Requirements	Collected	Other
VOCs (8260B)	(3) Encore Samplers	Yes/ No	
VOCs (8015B)	(2) Encore Samplers	Yes/ No	
SVOCs (8270C, SIM & 8151A) & Explosives (8330 & Picrates)	(1) 8oz. Glass Jar	Yes/ No	
SVOCs (8270C, SIM & 8151A), Explosives (8330 & Picrates) & PCBs (8082)	(1) 8oz. Glass Jar	Yes/ No	
Metals (6020) & Hg (7471A)	(1) 8oz. Glass Jar	Yes/ No	
Metals (6020), Hg (7471A), TOC, CEC & pH	(1) 8oz. Glass Jar	Yes/ No	
Dioxins/Furans	(1) _oz. Glass Jar	Yes/ No	

OBSERVATIONS / NOTES:

Soil Group No. PS-3

MAP:

See Figure 3-3 in the QAPP

Circle if Applicable:

MS/MSD

Duplicate ID No.:

Signature(s):

Tetra Tech NUS, Inc.

SOIL SAMPLE LOG SHEET

Project Site Name: NSWC CRANE
Project No.: N9060 CTO 0279

[] Surface Soil
[X] Subsurface Soil
[] Sediment
[] Other:
[] QA Sample Type:

Sample ID No.: 16SB 30 0203
Sample Location: 16SB 30
Sampled By: M. Cochran / T. Rojahn
C.O.C. No.: 0972

Type of Sample:
[X] Low Concentration
[] High Concentration

GRAB SAMPLE DATA:

	Depth	Color	Description (Sand, Silt, Clay, Moisture, etc.)
Date: 3-28-03 Time: 845 Method: DPT Monitor Reading (ppm): 0	2-3'	RED BROWN	CLAYEY SILT, DAMP

COMPOSITE SAMPLE DATA:

Date:	Time	Depth	Color	Description (Sand, Silt, Clay, Moisture, etc.)
Method:				
Monitor Readings (Range in ppm):				

SAMPLE COLLECTION INFORMATION:

Analysis	Container Requirements	Collected	Other
VOCs (8260B)	(3) Encore Samplers	Yes/ No	
VOCs (8015B)	(2) Encore Samplers	Yes/ No	
SVOCs (8270C, SIM & 8151A) & Explosives (8330 & Picrates)	(1) 8oz. Glass Jar	Yes/ No	
SVOCs (8270C, SIM & 8151A), Explosives (8330 & Picrates) & PCBs (8082)	(1) 8oz. Glass Jar	Yes/ No	
Metals (6020) & Hg (7471A)	(1) 8oz. Glass Jar	Yes/ No	
Metals (6020), Hg (7471A), TOC, CEC & pH	(1) 8oz. Glass Jar	Yes/ No	

OBSERVATIONS / NOTES:

Soil Group No. PBL-8

MAP:

See Figure 3-3 in the QAPP

Circle if Applicable:

MS/MSD

Duplicate ID No.:

Signature(s):

Tetra Tech NUS, Inc.

SOIL SAMPLE LOG SHEET

Project Site Name: NSWC CRANE
Project No.: N9060 CTO 0279

[X] Surface Soil
[] Subsurface Soil
[] Sediment
[] Other:
[] QA Sample Type:

Sample ID No.: 16SS 31 0002
Sample Location: 16SB 31
Sampled By: M. Cochran/ T. Rojahn
C.O.C. No.: 0972 & 0967

Type of Sample:
[X] Low Concentration
[] High Concentration

GRAB SAMPLE DATA:

	Depth	Color	Description (Sand, Silt, Clay, Moisture, etc.)
Date: 3-28-03 Time: 830 Method: DPT Monitor Reading (ppm): 0	0 - 2'	RED BROWN	CLAYEY SILT, DAMP

COMPOSITE SAMPLE DATA:

Date:	Time	Depth	Color	Description (Sand, Silt, Clay, Moisture, etc.)
Method:				
Monitor Readings (Range in ppm):				

SAMPLE COLLECTION INFORMATION:

Analysis	Container Requirements	Collected	Other
VOCs (8260B)	(3) Encore Samplers	Yes/ No	
VOCs (8015B)	(2) Encore Samplers	Yes/ No	
SVOCs (8270C, SIM & 8151A) & Explosives (8330 & Picrates)	(1) 8oz. Glass Jar	Yes/ No	
SVOCs (8270C, SIM & 8151A), Explosives (8330 & Picrates) & PCBs (8082)	(1) 8oz. Glass Jar	Yes/ No	
Metals (6020) & Hg (7471A)	(1) 8oz. Glass Jar	Yes/ No	
Metals (6020), Hg (7471A), TOC, CEC & pH	(1) 8oz. Glass Jar	Yes/ No	
Dioxins/Furans	(1) _oz. Glass Jar	Yes/ No	

OBSERVATIONS / NOTES:

Soil Group No. PS-3

MAP:

See Figure 3-3 in the QAPP

Circle if Applicable:

MS/MSD

Duplicate ID No.:

Signature(s):

Tetra Tech NUS, Inc.

SOIL SAMPLE LOG SHEET

Project Site Name: NSWC CRANE
Project No.: N9060 CTO 0279

[X] Surface Soil
[] Subsurface Soil
[] Sediment
[] Other:
[] QA Sample Type:

Sample ID No.: 16SS 32 0002
Sample Location: 16SB 32
Sampled By: M. Cochran/ T. Rojahn B.B. Hanover
C.O.C. No.: 0986 & 0985

Type of Sample:
[X] Low Concentration
[] High Concentration

GRAB SAMPLE DATA:

	Depth	Color	Description (Sand, Silt, Clay, Moisture, etc.)
Date: 4/9/03 Time: 1015 Method: ~~DPT~~ Row Sonde Monitor Reading (ppm): 0.0	0 - 2'	BROWN	CLAY

COMPOSITE SAMPLE DATA:

	Time	Depth	Color	Description (Sand, Silt, Clay, Moisture, etc.)
Date:				
Method:				
Monitor Readings (Range in ppm):				

SAMPLE COLLECTION INFORMATION:

Analysis	Container Requirements	Collected	Other
VOCs (8260B)	(3) Encore Samplers	Yes/ No	
VOCs (8015B)	(2) Encore Samplers	Yes/ No	
SVOCs (8270C, SIM & 8151A) & Explosives (8330 & Picrates)	(1) 8oz. Glass Jar	Yes/ No	
SVOCs (8270C, SIM & 8151A), Explosives (8330 & Picrates) & PCBs (8082) Dup on PCBs ONLY	(1) 8oz. Glass Jar	Yes/ No	
Metals (6020) & Hg (7471A)	(1) 8oz. Glass Jar	Yes/ No	
Metals (6020), Hg (7471A), TOC, CEC & pH	(1) 8oz. Glass Jar	Yes/ No	
Dioxins/Furans	(1) _oz. Glass Jar	Yes/ No	

OBSERVATIONS / NOTES:

Soil Group No. PS-3

MAP:

See Figure 3-3 in the QAPP

Circle if Applicable:

MS/MSD	Duplicate ID No.:
—	F004090301 on PCBs only

Signature(s): Robert Bolhover

Tetra Tech NUS, Inc.

SOIL SAMPLE LOG SHEET

Project Site Name: NSWC CRANE
Project No.: N9060 CTO 0279

[] Surface Soil
[X] Subsurface Soil
[] Sediment
[] Other:
[] QA Sample Type:

Sample ID No.: 16SB 32 0204
Sample Location: 16SB 32
Sampled By: M. Cochran / T. Rojahn / B. Balkovec
C.O.C. No.: 0986

Type of Sample:
[X] Low Concentration
[] High Concentration

GRAB SAMPLE DATA:

	Depth	Color	Description (Sand, Silt, Clay, Moisture, etc.)
Date: 4/9/03 Time: 1020 Method: ~~DPT~~ Low Surface Monitor Reading (ppm): 10.0	2'-4'	Brown / Lt. Gray	Sandy Clay

COMPOSITE SAMPLE DATA:

Date:	Time	Depth	Color	Description (Sand, Silt, Clay, Moisture, etc.)
Method:				
Monitor Readings (Range in ppm):				

SAMPLE COLLECTION INFORMATION:

Analysis	Container Requirements	Collected	Other
VOCs (8260B)	(3) Encore Samplers	Yes/No	
VOCs (8015B)	(2) Encore Samplers	Yes/No	
SVOCs (8270C, SIM & 8151A) & Explosives (8330 & Picrates)	(1) 8oz. Glass Jar	Yes/No	
SVOCs (8270C, SIM & 8151A), Explosives (8330 & Picrates) & PCBs (8082)	(1) 8oz. Glass Jar	Yes/No	
Metals (6020) & Hg (7471A)	(1) 8oz. Glass Jar	Yes/No	
Metals (6020), Hg (7471A), TOC, CEC & pH	(1) 8oz. Glass Jar	Yes/No	

OBSERVATIONS / NOTES:

Soil Group No. PBC - 8

MAP:

See Figure 3-3 in the QAPP

Circle if Applicable:

MS/MSD	Duplicate ID No.:
—	—

Signature(s): Robert Balkovec

Tetra Tech NUS, Inc.

SOIL SAMPLE LOG SHEET

Project Site Name: NSWC CRANE
Project No.: N9060 CTO 0279

[X] Surface Soil
[] Subsurface Soil
[] Sediment
[] Other:
[] QA Sample Type:

Sample ID No.: 16SS 33 0002
Sample Location: 16SB 33
Sampled By: M. Cochran/T. Rojahn/B. Blakovec
C.O.C. No.: 0986 & 0985

Type of Sample:
[X] Low Concentration
[] High Concentration

GRAB SAMPLE DATA:

	Depth	Color	Description (Sand, Silt, Clay, Moisture, etc.)
Date: 4/9/03 Time: 1000 Method: ~~DPT~~ ROTOSONIC Monitor Reading (ppm): 0.0	0 - 2'	BROWN + YELLOW ORANGE	CLAY + SILTY SAND W/S.S FRAGS

COMPOSITE SAMPLE DATA:

	Time	Depth	Color	Description (Sand, Silt, Clay, Moisture, etc.)
Date:				
Method:				
Monitor Readings (Range in ppm):				

SAMPLE COLLECTION INFORMATION:

Analysis	Container Requirements	Collected	Other
VOCs (8260B)	(3) Encore Samplers	Yes/No	
VOCs (8015B)	(2) Encore Samplers	Yes/No	
SVOCs (8270C, SIM & 8151A) & Explosives (8330 & Picrates)	(1) 8oz. Glass Jar	Yes/No	
SVOCs (8270C, SIM & 8151A), Explosives (8330 & Picrates) & PCBs (8082)	(1) 8oz. Glass Jar	Yes/No	
Metals (6020) & Hg (7471A)	(1) 8oz. Glass Jar	Yes/No	
Metals (6020), Hg (7471A), TOC, CEC & pH	(1) 8oz. Glass Jar	Yes/No	
Dioxins/Furans	(1) _oz. Glass Jar	Yes/No	

OBSERVATIONS / NOTES:

Soil Group No. PS-3

MAP:

See Figure 3-3 in the QAPP

Circle if Applicable:

MS/MSD	Duplicate ID No.:
—	—

Signature(s): Robert Beltrey

Tetra Tech NUS, Inc.

SOIL SAMPLE LOG SHEET

Project Site Name: NSWC CRANE
Project No.: N9060 CTO 0279

[] Surface Soil
[X] Subsurface Soil
[] Sediment
[] Other:
[] QA Sample Type:

Sample ID No.: 16SB 330204
Sample Location: 16SB 33
Sampled By: M. Cochran / T. Rojahn / B Balkovec
C.O.C. No.: 0986

Type of Sample:
[X] Low Concentration
[] High Concentration

GRAB SAMPLE DATA:

	Depth	Color	Description (Sand, Silt, Clay, Moisture, etc.)
Date: 4/9/03 Time: 1005 Method: ~~DPT~~ RocoSonic Monitor Reading (ppm): 0.0	2'-4'	YELLOW ORANGE	SILTY SAND W/ S.S FRAGS

COMPOSITE SAMPLE DATA:

Date:	Time	Depth	Color	Description (Sand, Silt, Clay, Moisture, etc.)
Method:				
Monitor Readings (Range in ppm):				

SAMPLE COLLECTION INFORMATION:

Analysis	Container Requirements	Collected	Other
VOCs (8260B)	(3) Encore Samplers	Yes/ No	
VOCs (8015B)	(2) Encore Samplers	Yes/ No	
SVOCs (8270C, SIM & 8151A) & Explosives (8330 & Picrates)	(1) 8oz. Glass Jar	Yes/ No	
SVOCs (8270C, SIM & 8151A), Explosives (8330 & Picrates) & PCBs (8082)	(1) 8oz. Glass Jar	Yes/ No	
Metals (6020) & Hg (7471A)	(1) 8oz. Glass Jar	Yes/ No	
Metals (6020), Hg (7471A); TOC, CEC & pH	(1) 8oz. Glass Jar	Yes/ No	

OBSERVATIONS / NOTES:

Soil Group No. PBS-9

MAP:

See Figure 3-3 in the QAPP

Circle if Applicable:

MS/MSD	Duplicate ID No.:
—	—

Signature(s): Robert Balkovec

Tetra Tech NUS, Inc.

SOIL SAMPLE LOG SHEET

Project Site Name: NSWC CRANE
Project No.: N9060 CTO 0279

[X] Surface Soil
[] Subsurface Soil
[] Sediment
[] Other:
[] QA Sample Type:

Sample ID No.: 16SS 34 0002
Sample Location: 16SB 34
Sampled By: M. Cochran/ T. Rojahn / B Bellkove
C.O.C. No.: 0986

Type of Sample:
[X] Low Concentration
[] High Concentration

GRAB SAMPLE DATA:

	Depth	Color	Description (Sand, Silt, Clay, Moisture, etc.)
Date: ~~4/4/03~~ 4/9/03 Time: 0447 Method: DPT Power Screw Monitor Reading (ppm): 0.0	0 - 2'	BR + YELLOW ORANGE	CLAY + SILTY SAND. W/S.S FRAGS

COMPOSITE SAMPLE DATA:

	Time	Depth	Color	Description (Sand, Silt, Clay, Moisture, etc.)
Date:				
Method:				
Monitor Readings (Range in ppm):				

SAMPLE COLLECTION INFORMATION:

Analysis	Container Requirements	Collected	Other
VOCs (8260B)	(3) Encore Samplers	(Yes) No	
VOCs (8015B)	(2) Encore Samplers	(Yes) No	
SVOCs (8270C, SIM & 8151A) & Explosives (8330 & Picrates)	(1) 8oz. Glass Jar	(Yes) No	
SVOCs (8270C, SIM & 8151A), Explosives (8330 & Picrates) & PCBs (8082)	(1) 8oz. Glass Jar	Yes (No)	
Metals (6020) & Hg (7471A)	(1) 8oz. Glass Jar	(Yes) No	
Metals (6020), Hg (7471A), TOC, CEC & pH	(1) 8oz. Glass Jar	Yes (No)	
Dioxins/Furans	(1) _oz. Glass Jar	Yes (No)	

OBSERVATIONS / NOTES:

Soil Group No. PS / [redacted] - 3

MAP:

See Figure 3-3 in the QAPP

Circle if Applicable:

MS/MSD

Duplicate ID No.:

Signature(s): Robert Bellkove

Tetra Tech NUS, Inc.

SOIL SAMPLE LOG SHEET

Project Site Name: NSWC CRANE
Project No.: N9060 CTO 0279

[] Surface Soil
[X] Subsurface Soil
[] Sediment
[] Other:
[] QA Sample Type:

Sample ID No.: 16SB 340203
Sample Location: 16SB 34
Sampled By: M. Cochran / T. Rojahn / B. Galvez
C.O.C. No.: 0986

Type of Sample:
[X] Low Concentration
[] High Concentration

GRAB SAMPLE DATA:

	Depth	Color	Description (Sand, Silt, Clay, Moisture, etc.)
Date: 4/9/03 Time: 0953 Method: ~~DPT~~ PowerSonic Monitor Reading (ppm): 0.0	2'-3'	YELLOW ORANGE	SILTY SAND w/ S.S FRAGS

COMPOSITE SAMPLE DATA:

Date:	Time	Depth	Color	Description (Sand, Silt, Clay, Moisture, etc.)
Method:				
Monitor Readings (Range in ppm):				

SAMPLE COLLECTION INFORMATION:

Analysis	Container Requirements	Collected	Other
VOCs (8260B)	(3) Encore Samplers	Yes/No	
VOCs (8015B)	(2) Encore Samplers	Yes/No	
SVOCs (8270C, SIM & 8151A) & Explosives (8330 & Picrates)	(1) 8oz. Glass Jar	Yes/No	
SVOCs (8270C, SIM & 8151A), Explosives (8330 & Picrates) & PCBs (8082)	(1) 8oz. Glass Jar	Yes/No	
Metals (6020) & Hg (7471A)	(1) 8oz. Glass Jar	Yes/No	
Metals (6020), Hg (7471A), TOC, CEC & pH	(1) 8oz. Glass Jar	Yes/No	

OBSERVATIONS / NOTES:

Soil Group No. PBS-9

MAP:

See Figure 3-3 in the QAPP

Circle if Applicable:

MS/MSD	Duplicate ID No.:
—	—

Signature(s): Robert Belkner

Tetra Tech NUS, Inc.

SOIL SAMPLE LOG SHEET

Project Site Name: NSWC CRANE
Project No.: N9060 CTO 0279

[X] Surface Soil
[] Subsurface Soil
[] Sediment
[] Other:
[] QA Sample Type:

Sample ID No.: 16SS 35 0002
Sample Location: 16SB 35
Sampled By: M. Cochran/ T. Rojahn
C.O.C. No.: 0981

Type of Sample:
[X] Low Concentration
[] High Concentration

GRAB SAMPLE DATA:

	Depth	Color	Description (Sand, Silt, Clay, Moisture, etc.)
Date: 3-28-03 Time: 1440 Method: DPT Monitor Reading (ppm): 0	0 - 2'	BROWN	CLAYEY SILT, DAMP

COMPOSITE SAMPLE DATA:

Date:	Time	Depth	Color	Description (Sand, Silt, Clay, Moisture, etc.)
Method:				
Monitor Readings (Range in ppm):				

SAMPLE COLLECTION INFORMATION:

Analysis	Container Requirements	Collected	Other
VOCs (8260B)	(3) Encore Samplers	Yes/ No	
VOCs (8015B)	(2) Encore Samplers	Yes/ No	
SVOCs (8270C, SIM & 8151A) & Explosives (8330 & Picrates)	(1) 8oz. Glass Jar	Yes/ No	
SVOCs (8270C, SIM & 8151A), Explosives (8330 & Picrates) & PCBs (8082)	(1) 8oz. Glass Jar	Yes/ No	
Metals (6020) & Hg (7471A)	(1) 8oz. Glass Jar	Yes/ No	
Metals (6020), Hg (7471A), TOC, CEC & pH	(1) 8oz. Glass Jar	Yes/ No	
Dioxins/Furans	(1) _oz. Glass Jar	Yes/ No	

OBSERVATIONS / NOTES:

Soil Group No. PS-3

MAP:

See Figure 3-3 in the QAPP

Circle if Applicable:

MS/MSD —

Duplicate ID No.: —

Signature(s):

Tetra Tech NUS, Inc.

SOIL SAMPLE LOG SHEET

Project Site Name: NSWC CRANE
Project No.: N9060 CTO 0279

[X] Surface Soil
[] Subsurface Soil
[] Sediment
[] Other:
[] QA Sample Type:

Sample ID No.: 16SS 36 0002
Sample Location: 16SB 36
Sampled By: M. Cochran/ T. Rojahn/B. Balkovec
C.O.C. No.: 0996

Type of Sample:
[X] Low Concentration
[] High Concentration

GRAB SAMPLE DATA:

	Depth	Color	Description (Sand, Silt, Clay, Moisture, etc.)
Date: 4/9/03 Time: 0930 Method: ~~DPT~~ RotoSonic Monitor Reading (ppm): 0-0	0 - 2'	BROWN	CLAY

COMPOSITE SAMPLE DATA:

Date:	Time	Depth	Color	Description (Sand, Silt, Clay, Moisture, etc.)
Method:				
Monitor Readings (Range in ppm):				

SAMPLE COLLECTION INFORMATION:

Analysis	Container Requirements	Collected	Other
VOCs (8260B)	(3) Encore Samplers	Yes/ No	
VOCs (8015B)	(2) Encore Samplers	Yes/ No	
SVOCs (8270C, SIM & 8151A) & Explosives (8330 & Picrates)	(1) 8oz. Glass Jar	Yes/ No	
SVOCs (8270C, SIM & 8151A), Explosives (8330 & Picrates) & PCBs (8082)	(1) 8oz. Glass Jar	Yes/ No	
Metals (6020) & Hg (7471A)	(1) 8oz. Glass Jar	Yes/ No	
Metals (6020), Hg (7471A), TOC, CEC & pH	(1) 8oz. Glass Jar	Yes/ No	
Dioxins/Furans	(1) _oz. Glass Jar	Yes/ No	

OBSERVATIONS / NOTES:

Soil Group No. PS - 3

MAP:

See Figure 3-3 in the QAPP

Circle if Applicable:

MS/MSD	Duplicate ID No.:
—	—

Signature(s):

Robert Belkiner

Tetra Tech NUS, Inc.

SOIL SAMPLE LOG SHEET

Project Site Name: NSWC CRANE
Project No.: N9060 CTO 0279

[] Surface Soil
[X] Subsurface Soil
[] Sediment
[] Other:
[] QA Sample Type:

Sample ID No.: 16SB36 0203
Sample Location: 16SB36
Sampled By: M. Cochran / T. Rojahn / B. Dallouze
C.O.C. No.: 0986

Type of Sample:
[X] Low Concentration
[] High Concentration

GRAB SAMPLE DATA:

	Depth	Color	Description (Sand, Silt, Clay, Moisture, etc.)
Date: 4/9/03 Time: 0940 Method: ~~DPT~~ RotoSonic Monitor Reading (ppm): 0.0	2'-3'	YELLOW ORANGE	SILTY SAND w/ S.S. FRAGMENTS

COMPOSITE SAMPLE DATA:

	Time	Depth	Color	Description (Sand, Silt, Clay, Moisture, etc.)
Date:				
Method:				
Monitor Readings (Range in ppm):				

SAMPLE COLLECTION INFORMATION:

Analysis	Container Requirements	Collected	Other
VOCs (8260B)	(3) Encore Samplers	Yes/ No	
VOCs (8015B)	(2) Encore Samplers	Yes/ No	
SVOCs (8270C, SIM & 8151A) & Explosives (8330 & Picrates)	(1) 8oz. Glass Jar	Yes/ No	
SVOCs (8270C, SIM & 8151A), Explosives (8330 & Picrates) & PCBs (8082)	(1) 8oz. Glass Jar	Yes/ No	
Metals (6020) & Hg (7471A)	(1) 8oz. Glass Jar	Yes/ No	
Metals (6020), Hg (7471A), TOC, CEC & pH	(1) 8oz. Glass Jar	Yes/ No	

OBSERVATIONS / NOTES:

Soil Group No. PBS-9

MAP:

See Figure 3-3 in the QAPP

Circle if Applicable:

MS/MSD	Duplicate ID No.:
—	—

Signature(s): Robert Balkwill

Tetra Tech NUS, Inc.

SOIL SAMPLE LOG SHEET

Project Site Name: NSWC CRANE
Project No.: N9060 CTO 0279

[X] Surface Soil
[] Subsurface Soil
[] Sediment
[] Other:
[] QA Sample Type:

Sample ID No.: 16SS 37 0002
Sample Location: 16SB 37
Sampled By: M. Cochran/ T. Rojahn
C.O.C. No.: 0981

Type of Sample:
[X] Low Concentration
[] High Concentration

GRAB SAMPLE DATA:

	Depth	Color	Description (Sand, Silt, Clay, Moisture, etc.)
Date: 3-28-03 Time: 1435 Method: DPT Monitor Reading (ppm): 0	0 - 2'	DARK BROWN	DAMP CLAYEY SILT + GRAVEL

COMPOSITE SAMPLE DATA:

Date:	Time	Depth	Color	Description (Sand, Silt, Clay, Moisture, etc.)
Method:				
Monitor Readings (Range in ppm):				

SAMPLE COLLECTION INFORMATION:

Analysis	Container Requirements	Collected	Other
VOCs (8260B)	(3) Encore Samplers	Yes/ No	
VOCs (8015B)	(2) Encore Samplers	Yes/ No	
SVOCs (8270C, SIM & 8151A) & Explosives (8330 & Picrates)	(1) 8oz. Glass Jar	Yes/ No	
SVOCs (8270C, SIM & 8151A), Explosives (8330 & Picrates) & PCBs (8082)	(1) 8oz. Glass Jar	Yes/ No	
Metals (6020) & Hg (7471A)	(1) 8oz. Glass Jar	Yes/ No	
Metals (6020), Hg (7471A), TOC, CEC & pH	(1) 8oz. Glass Jar	Yes/ No	
Dioxins/Furans	(1) _oz. Glass Jar	Yes/ No	

OBSERVATIONS / NOTES:

Soil Group No. PS-3

MAP:

See Figure 3-3 in the QAPP

Circle if Applicable:

MS/MSD

Duplicate ID No.: —

Signature(s):

Tetra Tech NUS, Inc.

SOIL SAMPLE LOG SHEET

Project Site Name: NSWC CRANE
Project No.: N9060 CTO 0279

[X] Surface Soil
[] Subsurface Soil
[] Sediment
[] Other:
[] QA Sample Type:

Sample ID No.: 16SS 38 0002
Sample Location: 16SB 38
Sampled By: M. Cochran/ T. Rojahn
C.O.C. No.: 0981

Type of Sample:
[X] Low Concentration
[] High Concentration

GRAB SAMPLE DATA:

	Depth	Color	Description (Sand, Silt, Clay, Moisture, etc.)
Date: 3-28-03 Time: 1410 Method: DPT Monitor Reading (ppm): 0	0 - 2'	BROWN	CLAYEY SILT, DAMP

COMPOSITE SAMPLE DATA:

	Time	Depth	Color	Description (Sand, Silt, Clay, Moisture, etc.)
Date:				
Method:				
Monitor Readings (Range in ppm):				

SAMPLE COLLECTION INFORMATION:

Analysis	Container Requirements	Collected	Other
VOCs (8260B)	(3) Encore Samplers	Yes/ No	
VOCs (8015B)	(2) Encore Samplers	Yes/ No	
SVOCs (8270C, SIM & 8151A) & Explosives (8330 & Picrates)	(1) 8oz. Glass Jar	Yes/ No	
SVOCs (8270C, SIM & 8151A), Explosives (8330 & Picrates) & PCBs (8082)	(1) 8oz. Glass Jar	Yes/ No	
Metals (6020) & Hg (7471A)	(1) 8oz. Glass Jar	Yes/ No	
Metals (6020), Hg (7471A), TOC, CEC & pH	(1) 8oz. Glass Jar	Yes/ No	
Dioxins/Furans	(1) _oz. Glass Jar	Yes/ No	

OBSERVATIONS / NOTES:

Soil Group No. PS-3

MAP:

See Figure 3-3 in the QAPP

Circle if Applicable:

MS/MSD

Duplicate ID No.:

Signature(s):

Tetra Tech NUS, Inc.

SOIL SAMPLE LOG SHEET

Project Site Name: NSWC CRANE
Project No.: N9060 CTO 0279

[] Surface Soil
[X] Subsurface Soil
[] Sediment
[] Other:
[] QA Sample Type:

Sample ID No.: 16SB 380203
Sample Location: 16SB 38
Sampled By: M. Cochran / T. Rojahn
C.O.C. No.: 0981

Type of Sample:
[X] Low Concentration
[] High Concentration

GRAB SAMPLE DATA:

	Depth	Color	Description (Sand, Silt, Clay, Moisture, etc.)
Date: 3-28-03 Time: 1415 Method: DPT Monitor Reading (ppm): 0	2-3'	BROWN	CLAYEY SILT, DAMP

COMPOSITE SAMPLE DATA:

Date:	Time	Depth	Color	Description (Sand, Silt, Clay, Moisture, etc.)
Method:				
Monitor Readings (Range in ppm):				

SAMPLE COLLECTION INFORMATION:

Analysis	Container Requirements	Collected	Other
VOCs (8260B)	(3) Encore Samplers	Yes/ No	
VOCs (8015B)	(2) Encore Samplers	Yes/ No	
SVOCs (8270C, SIM & 8151A) & Explosives (8330 & Picrates)	(1) 8oz. Glass Jar	Yes/ No	
SVOCs (8270C, SIM & 8151A), Explosives (8330 & Picrates) & PCBs (8082)	(1) 8oz. Glass Jar	Yes/ No	
Metals (6020) & Hg (7471A)	(1) 8oz. Glass Jar	Yes/ No	
Metals (6020), Hg (7471A), TOC, CEC & pH	(1) 8oz. Glass Jar	Yes/ No	

OBSERVATIONS / NOTES:

Soil Group No. PBL-8

MAP:

See Figure 3-3 in the QAPP

Circle if Applicable:

MS/MSD	Duplicate ID No.:
—	—

Signature(s):

Tetra Tech NUS, Inc.

SOIL SAMPLE LOG SHEET

Project Site Name: NSWC CRANE
Project No.: N9060 CTO 0279

[X] Surface Soil
[] Subsurface Soil
[] Sediment
[] Other:
[] QA Sample Type:

Sample ID No.: 16SS 39 0002
Sample Location: 16SB 39
Sampled By: M. Cochran/ T. Rojahn
C.O.C. No.: 0981

Type of Sample:
[X] Low Concentration
[] High Concentration

GRAB SAMPLE DATA:

	Depth	Color	Description (Sand, Silt, Clay, Moisture, etc.)
Date: 3-28-03 Time: 1400 Method: DPT Monitor Reading (ppm): 0	0 - 2'	BROWN	CLAYEL SILT + GRAVEL FRAGS DAMP

COMPOSITE SAMPLE DATA:

	Time	Depth	Color	Description (Sand, Silt, Clay, Moisture, etc.)
Date:				
Method:				
Monitor Readings (Range in ppm):				

SAMPLE COLLECTION INFORMATION:

Analysis	Container Requirements	Collected	Other
VOCs (8260B)	(3) Encore Samplers	Yes/ No	
VOCs (8015B)	(2) Encore Samplers	Yes/ No	
SVOCs (8270C, SIM & 8151A) & Explosives (8330 & Picrates)	(1) 8oz. Glass Jar	Yes/ No	
SVOCs (8270C, SIM & 8151A), Explosives (8330 & Picrates) & PCBs (8082)	(1) 8oz. Glass Jar	Yes/ No	
Metals (6020) & Hg (7471A)	(1) 8oz. Glass Jar	Yes/ No	
Metals (6020), Hg (7471A), TOC, CEC & pH	(1) 8oz. Glass Jar	Yes/ No	
Dioxins/Furans	(1) _oz. Glass Jar	Yes/ No	

OBSERVATIONS / NOTES:

Soil Group No. PS-3

MAP:

See Figure 3-3 in the QAPP

Circle if Applicable:

MS/MSD —

Duplicate ID No.: —

Signature(s):

Tetra Tech NUS, Inc.

SOIL SAMPLE LOG SHEET

Project Site Name: NSWC CRANE
Project No.: N9060 CTO 0279

[] Surface Soil
[X] Subsurface Soil
[] Sediment
[] Other:
[] QA Sample Type:

Sample ID No.: 16SB 3 90203
Sample Location: 16SB 39
Sampled By: M. Cochran / T. Rojahn
C.O.C. No.: 0981

Type of Sample:
[X] Low Concentration
[] High Concentration

GRAB SAMPLE DATA:

	Depth	Color	Description (Sand, Silt, Clay, Moisture, etc.)
Date: 3-28-03 Time: 1405 Method: DPT Monitor Reading (ppm): 0	2-3'	BROWN	CLAYEY SILT

COMPOSITE SAMPLE DATA:

Date:	Time	Depth	Color	Description (Sand, Silt, Clay, Moisture, etc.)
Method:				
Monitor Readings (Range in ppm):				

SAMPLE COLLECTION INFORMATION:

Analysis	Container Requirements	Collected	Other
VOCs (8260B)	(3) Encore Samplers	Yes/ No	
VOCs (8015B)	(2) Encore Samplers	Yes/ No	
SVOCs (8270C, SIM & 8151A) & Explosives (8330 & Picrates)	(1) 8oz. Glass Jar	Yes/ No	
SVOCs (8270C, SIM & 8151A), Explosives (8330 & Picrates) & PCBs (8082)	(1) 8oz. Glass Jar	Yes/ No	
Metals (6020) & Hg (7471A)	(1) 8oz. Glass Jar	Yes/ No	
Metals (6020), Hg (7471A), TOC, CEC & pH	(1) 8oz. Glass Jar	Yes/ No	

OBSERVATIONS / NOTES:

Soil Group No. PBL-8

MAP:

See Figure 3-3 in the QAPP

Circle if Applicable:

MS/MSD —

Duplicate ID No.: —

Signature(s):

Tetra Tech NUS, Inc.

SOIL SAMPLE LOG SHEET

Project Site Name: NSWC CRANE
Project No.: N9060 CTO 0279

[] Surface Soil
[X] Subsurface Soil
[] Sediment
[] Other:
[] QA Sample Type:

Sample ID No.: 16SB 400506
Sample Location: 16SB 40
Sampled By: M. Cochran / T. Rojahn
C.O.C. No.: 0981

Type of Sample:
[X] Low Concentration
[] High Concentration

GRAB SAMPLE DATA:

Date: 3-28-03
Time: 1340
Method: DPT
Monitor Reading (ppm): 0

Depth	Color	Description (Sand, Silt, Clay, Moisture, etc.)
5-6	BROWN	CLAYEY SILT, DAMP

COMPOSITE SAMPLE DATA:

Date:
Method:
Monitor Readings (Range in ppm):

Time	Depth	Color	Description (Sand, Silt, Clay, Moisture, etc.)

SAMPLE COLLECTION INFORMATION:

Analysis	Container Requirements	Collected	Other
VOCs (8260B)	(3) Encore Samplers	Yes/ No	
VOCs (8015B)	(2) Encore Samplers	Yes/ No	
SVOCs (8270C, SIM & 8151A) & Explosives (8330 & Picrates)	(1) 8oz. Glass Jar	Yes/ No	
SVOCs (8270C, SIM & 8151A), Explosives (8330 & Picrates) & PCBs (8082)	(1) 8oz. Glass Jar	Yes/ No	
Metals (6020) & Hg (7471A)	(1) 8oz. Glass Jar	Yes/ No	
Metals (6020), Hg (7471A), TOC, CEC & pH	(1) 8oz. Glass Jar	Yes/ No	

OBSERVATIONS / NOTES:

Soil Group No. PBL-8

MAP:

See Figure 3-3 in the QAPP

Circle if Applicable:

MS/MSD —

Duplicate ID No.: —

Signature(s):

Tetra Tech NUS, Inc.

SOIL SAMPLE LOG SHEET

Project Site Name: NSWC CRANE
Project No.: N9060 CTO 0279

[] Surface Soil
[X] Subsurface Soil
[] Sediment
[] Other:
[] QA Sample Type:

Sample ID No.: 16SB 40 0608
Sample Location: 16SB 40
Sampled By: M. Cochran / T. Rojahn
C.O.C. No.: 0981

Type of Sample:
[X] Low Concentration
[] High Concentration

GRAB SAMPLE DATA:

	Depth	Color	Description (Sand, Silt, Clay, Moisture, etc.)
Date: 3-28-03 Time: 1345 Method: DPT Monitor Reading (ppm): 0	6-8	BROWN	CLAYEY SILT, MOIST

COMPOSITE SAMPLE DATA:

Date:	Time	Depth	Color	Description (Sand, Silt, Clay, Moisture, etc.)
Method:				
Monitor Readings (Range in ppm):				

SAMPLE COLLECTION INFORMATION:

Analysis	Container Requirements	Collected	Other
VOCs (8260B)	(3) Encore Samplers	Yes/ No	
VOCs (8015B)	(2) Encore Samplers	Yes/ No	
SVOCs (8270C, SIM & 8151A) & Explosives (8330 & Picrates)	(1) 8oz. Glass Jar	Yes/ No	
SVOCs (8270C, SIM & 8151A), Explosives (8330 & Picrates) & PCBs (8082)	(1) 8oz. Glass Jar	Yes/ No	
Metals (6020) & Hg (7471A)	(1) 8oz. Glass Jar	Yes/ No	
Metals (6020), Hg (7471A), TOC, CEC & pH	(1) 8oz. Glass Jar	Yes/ No	

OBSERVATIONS / NOTES:

Soil Group No. PBL-8

MAP:

See Figure 3-3 in the QAPP

Circle if Applicable:

MS/MSD	Duplicate ID No.:
—	FD032803 03

Signature(s):

Tetra Tech NUS, Inc.

SOIL SAMPLE LOG SHEET

Project Site Name: NSWC CRANE
Project No.: N9060 CTO 0279

[] Surface Soil
[X] Subsurface Soil
[] Sediment
[] Other:
[] QA Sample Type:

Sample ID No.: 16SB 41 0305
Sample Location: 16SB 41
Sampled By: M. Cochran / T. Rojahn
C.O.C. No.: 0959

Type of Sample:
[X] Low Concentration
[] High Concentration

GRAB SAMPLE DATA:

	Depth	Color	Description (Sand, Silt, Clay, Moisture, etc.)
Date: 3-27-03 Time: 1010 Method: DPT Monitor Reading (ppm): 1.7	3-5'	BROWN	CLAYEY SILT, DAMP

COMPOSITE SAMPLE DATA:

	Time	Depth	Color	Description (Sand, Silt, Clay, Moisture, etc.)
Date:				
Method:				
Monitor Readings (Range in ppm):				

SAMPLE COLLECTION INFORMATION:

Analysis	Container Requirements	Collected	Other
VOCs (8260B)	(3) Encore Samplers	Yes/ No	
VOCs (8015B)	(2) Encore Samplers	Yes/ No	
SVOCs (8270C, SIM & 8151A) & Explosives (8330 & Picrates)	(1) 8oz. Glass Jar	Yes/ No	
SVOCs (8270C, SIM & 8151A), Explosives (8330 & Picrates) & PCBs (8082)	(1) 8oz. Glass Jar	Yes/ No	
Metals (6020) & Hg (7471A)	(1) 8oz. Glass Jar	Yes/ No	
Metals (6020), Hg (7471A), TOC, CEC & pH	(1) 8oz. Glass Jar	Yes/ No	

OBSERVATIONS / NOTES:

Soil Group No. PBL-8

MAP:

See Figure 3-3 in the QAPP

Circle if Applicable:

MS/MSD	Duplicate ID No.:
—	—

Signature(s):

Tetra Tech NUS, Inc.

SOIL SAMPLE LOG SHEET

Project Site Name: NSWC CRANE
Project No.: N9060 CTO 0279

[] Surface Soil
[X] Subsurface Soil
[] Sediment
[] Other:
[] QA Sample Type:

Sample ID No.: 16SB 410507
Sample Location: 16SB 41
Sampled By: M. Cochran / T. Rojahn
C.O.C. No.: 0959

Type of Sample:
[X] Low Concentration
[] High Concentration

GRAB SAMPLE DATA:

	Depth	Color	Description (Sand, Silt, Clay, Moisture, etc.)
Date: 3-27-03 Time: 1015 Method: DPT Monitor Reading (ppm): 1.7	5-7'	BROWN	CLAYEY SILT, MOIST

COMPOSITE SAMPLE DATA:

Date:	Time	Depth	Color	Description (Sand, Silt, Clay, Moisture, etc.)
Method:				
Monitor Readings (Range in ppm):				

SAMPLE COLLECTION INFORMATION:

Analysis	Container Requirements	Collected	Other
VOCs (8260B)	(3) Encore Samplers	Yes/ No	
VOCs (8015B)	(2) Encore Samplers	Yes/ No	
SVOCs (8270C, SIM & 8151A) & Explosives (8330 & Picrates)	(1) 8oz. Glass Jar	Yes/ No	
SVOCs (8270C, SIM & 8151A), Explosives (8330 & Picrates) & PCBs (8082)	(1) 8oz. Glass Jar	Yes/ No	
Metals (6020) & Hg (7471A)	(1) 8oz. Glass Jar	Yes/ No	
Metals (6020), Hg (7471A), TOC, CEC & pH	(1) 8oz. Glass Jar	Yes/ No	

OBSERVATIONS / NOTES:

Soil Group No. PBL-8

MAP:

See Figure 3-3 in the QAPP

Circle if Applicable:

MS/MSD

Duplicate ID No.:

Signature(s):

Tetra Tech NUS, Inc.

SEDIMENT SAMPLE LOG SHEET

Project Site Name: NSWC CRANE
Project No.: N9060 CTO 0279

[] Surface Soil
[] Subsurface Soil
[X] Sediment
[] Other:
[] QA Sample Type:

Sample ID No.: 16SD 02 0004
Sample Location: 16SD 02
Sampled By: T. Rojahn
C.O.C. No.: 6982

Type of Sample:
[X] Low Concentration
[] High Concentration

GRAB SAMPLE DATA:

	Depth	Color	Description (Sand, Silt, Clay, Moisture, etc.)
Date: 4/1/03 Time: 1045 Method: Disposable Trowel Monitor Reading (ppm): —	0 - 4"	BRH	clayey silt w/root material

COMPOSITE SAMPLE DATA:

	Time	Depth	Color	Description (Sand, Silt, Clay, Moisture, etc.)
Date:				
Method:				
Monitor Readings (Range in ppm):				

SAMPLE COLLECTION INFORMATION:

Analysis	Container Requirements	Collected	Other
SVOCs (8270C, SIM & 8151A) & Explosives (8330 & Picrates)	(1) 8oz. Glass Jar	Yes/No	
Metals (6020) & Hg (7471A)	(1) 8oz. Glass Jar	Yes/No	
Metals (6020), Hg (7471A), TOC, CEC, pH & AVS/SEM	(1) 8oz. Glass Jar	Yes/No	

OBSERVATIONS / NOTES:

MAP:

Refer to Figure 3-3 of the QAPP for CTO 0166

Circle if Applicable:

MS/MSD —

Duplicate ID No.: —

Signature(s): Ty Rojahn

Tetra Tech NUS, Inc.

SEDIMENT SAMPLE LOG SHEET

Project Site Name: NSWC CRANE
Project No.: N9060 CTO 0279

[] Surface Soil
[] Subsurface Soil
[X] Sediment
[] Other:
[] QA Sample Type:

Sample ID No.: 16SD03 0004
Sample Location: 16SD 03
Sampled By: T. Rojahn
C.O.C. No.: 0982

Type of Sample:
[X] Low Concentration
[] High Concentration

GRAB SAMPLE DATA:

	Depth	Color	Description (Sand, Silt, Clay, Moisture, etc.)
Date: 4/1/03 Time: 1315 Method: Disposable Trowel Monitor Reading (ppm): —	0 - 4"	Dark Brown	Silty Sand Moist

COMPOSITE SAMPLE DATA:

Date:	Time	Depth	Color	Description (Sand, Silt, Clay, Moisture, etc.)
Method:				
Monitor Readings (Range in ppm):				

SAMPLE COLLECTION INFORMATION:

Analysis	Container Requirements	Collected	Other
SVOCs (8270C, SIM & 8151A) & Explosives (8330 & Picrates)	(1) 8oz. Glass Jar	Yes/No	
Metals (6020) & Hg (7471A)	(1) 8oz. Glass Jar	Yes/No	
Metals (6020), Hg (7471A), TOC, CEC, pH & AVS/SEM	(1) 8oz. Glass Jar	Yes/No	

OBSERVATIONS / NOTES:

MAP:

Refer to Figure 3-3 of the QAPP for CTO 0166

Circle if Applicable:

MS/MSD —

Duplicate ID No.: —

Signature(s): T. Rojahn

Tetra Tech NUS, Inc.

SEDIMENT SAMPLE LOG SHEET

Project Site Name: NSWC CRANE
Project No.: N9060 CTO 0279

[] Surface Soil
[] Subsurface Soil
[X] Sediment
[] Other:
[] QA Sample Type:

Sample ID No.: 16SD~~04~~0004
Sample Location: 16SD04
Sampled By: T. Rojahn
C.O.C. No.: 0982

Type of Sample:
[X] Low Concentration
[] High Concentration

GRAB SAMPLE DATA:

	Depth	Color	Description (Sand, Silt, Clay, Moisture, etc.)
Date: 4/1/10 Time: 1110 Method: Disposable Trowel Monitor Reading (ppm): —	0 - 4"	BRN	Clayey silt little Gravel moist

COMPOSITE SAMPLE DATA:

	Time	Depth	Color	Description (Sand, Silt, Clay, Moisture, etc.)
Date:				
Method:				
Monitor Readings (Range in ppm):				

SAMPLE COLLECTION INFORMATION:

Analysis	Container Requirements	Collected	Other
SVOCs (8270C, SIM & 8151A) & Explosives (8330 & Picrates)	(1) 8oz. Glass Jar	Yes/No	
Metals (6020) & Hg (7471A)	(1) 8oz. Glass Jar	Yes/No	
Metals (6020), Hg (7471A), TOC, CEC, pH & AVS/SEM	(1) 8oz. Glass Jar	Yes/No	

OBSERVATIONS / NOTES:

MAP:

Refer to Figure 3-3 of the QAPP for CTO 0166

Circle if Applicable:

MS/MSD —

Duplicate ID No.: —

Signature(s): Tuy Rojahn

Tetra Tech NUS, Inc.

SEDIMENT SAMPLE LOG SHEET

Project Site Name: NSWC CRANE
Project No.: N9060 CTO 0279

[] Surface Soil
[] Subsurface Soil
[X] Sediment
[] Other:
[] QA Sample Type:

Sample ID No.: 16SD050004
Sample Location: 16SD05
Sampled By: T. Rojahn
C.O.C. No.: 0982

Type of Sample:
[X] Low Concentration
[] High Concentration

GRAB SAMPLE DATA:

	Depth	Color	Description (Sand, Silt, Clay, Moisture, etc.)
Date: 4/1/03 Time: 1120 Method: Disposable Trowel Monitor Reading (ppm): —	0 - 4"	BRN	Silty Sand Sed.

COMPOSITE SAMPLE DATA:

Date:	Time	Depth	Color	Description (Sand, Silt, Clay, Moisture, etc.)
Method:				
Monitor Readings (Range in ppm):				

SAMPLE COLLECTION INFORMATION:

Analysis	Container Requirements	Collected	Other
SVOCs (8270C, SIM & 8151A) & Explosives (8330 & Picrates)	(1) 8oz. Glass Jar	Yes/No	
Metals (6020) & Hg (7471A)	(1) 8oz. Glass Jar	Yes/No	
Metals (6020), Hg (7471A), TOC, CEC, pH & AVS/SEM	(1) 8oz. Glass Jar	Yes/No	

OBSERVATIONS / NOTES:

MAP:

Refer to Figure 3-3 of the QAPP for CTO 0166

Circle if Applicable:

MS/MSD	Duplicate ID No.:
—	FD040103 02 (TR)

Signature(s):

Tetra Tech NUS, Inc.

SEDIMENT SAMPLE LOG SHEET

Project Site Name: NSWC CRANE
Project No.: N9060 CTO 0279

[] Surface Soil
[] Subsurface Soil
[X] Sediment
[] Other:
[] QA Sample Type:

Sample ID No.: 16SD060004
Sample Location: 16SD06
Sampled By: T. Rojahn
C.O.C. No.: 0982

Type of Sample:
[X] Low Concentration
[] High Concentration

GRAB SAMPLE DATA:

	Depth	Color	Description (Sand, Silt, Clay, Moisture, etc.)
Date: 4/1/03	0 - 4"	Yellow Brn	Clayey Silt Sat.
Time: 1305			
Method: Disposable Trowel			
Monitor Reading (ppm): —			

COMPOSITE SAMPLE DATA:

Date:	Time	Depth	Color	Description (Sand, Silt, Clay, Moisture, etc.)
Method:				
Monitor Readings (Range in ppm):				

SAMPLE COLLECTION INFORMATION:

Analysis	Container Requirements	Collected	Other
SVOCs (8270C, SIM & 8151A) & Explosives (8330 & Picrates)	(1) 8oz. Glass Jar	Yes/No	
Metals (6020) & Hg (7471A)	(1) 8oz. Glass Jar	Yes/No	
Metals (6020), Hg (7471A), TOC, CEC, pH & AVS/SEM	(1) 8oz. Glass Jar	Yes/No	

OBSERVATIONS / NOTES:

MAP:

Refer to Figure 3-3 of the QAPP for CTO 0166

Circle if Applicable:

MS/MSD

Duplicate ID No.: FD04010302

Signature(s): T. Rojahn

Tetra Tech NUS, Inc.

SEDIMENT SAMPLE LOG SHEET

Project Site Name: NSWC CRANE
Project No.: N9060 CTO 0279

[] Surface Soil
[] Subsurface Soil
[X] Sediment
[] Other:
[] QA Sample Type:

Sample ID No.: 16SD050004
Sample Location: 16SD08
Sampled By: T. Rojahn
C.O.C. No.: 0982

Type of Sample:
[X] Low Concentration
[] High Concentration

GRAB SAMPLE DATA:

	Depth	Color	Description (Sand, Silt, Clay, Moisture, etc.)
Date: 4/1/03 Time: 1235 Method: Disposable Trowel Monitor Reading (ppm): —	0 - 4"	BRN	Clayey silt little gravel moist

COMPOSITE SAMPLE DATA:

Date:	Time	Depth	Color	Description (Sand, Silt, Clay, Moisture, etc.)
Method:				
Monitor Readings (Range in ppm):				

SAMPLE COLLECTION INFORMATION:

Analysis	Container Requirements	Collected	Other
SVOCs (8270C, SIM & 8151A) & Explosives (8330 & Picrates)	(1) 8oz. Glass Jar	Yes/No	
Metals (6020) & Hg (7471A)	(1) 8oz. Glass Jar	Yes/No	
Metals (6020), Hg (7471A), TOC, CEC, pH & AVS/SEM	(1) 8oz. Glass Jar	Yes/No	

OBSERVATIONS / NOTES:

MAP:

Refer to Figure 3-3 of the QAPP for CTO 0166

Circle if Applicable:

MS/MSD

Duplicate ID No.: —

Signature(s):

Tony Rojahn

Tetra Tech NUS, Inc.

SEDIMENT SAMPLE LOG SHEET

Project Site Name: NSWC CRANE
Project No.: N9060 CTO 0279

[] Surface Soil
[] Subsurface Soil
[X] Sediment
[] Other:
[] QA Sample Type:

Sample ID No.: 16SD090004
Sample Location: 16SD09
Sampled By: T. Rojahn
C.O.C. No.: 0982

Type of Sample:
[X] Low Concentration
[] High Concentration

GRAB SAMPLE DATA:

	Depth	Color	Description (Sand, Silt, Clay, Moisture, etc.)
Date: 4/1/03 Time: 1250 Method: Disposable Trowel Monitor Reading (ppm): —	0 - 4"	BRN	Clayey silt w/root mat. Moist

COMPOSITE SAMPLE DATA:

Date:	Time	Depth	Color	Description (Sand, Silt, Clay, Moisture, etc.)
Method:				
Monitor Readings (Range in ppm):				

SAMPLE COLLECTION INFORMATION:

Analysis	Container Requirements	Collected	Other
SVOCs (8270C, SIM & 8151A) & Explosives (8330 & Picrates)	(1) 8oz. Glass Jar	Yes/No	
Metals (6020) & Hg (7471A)	(1) 8oz. Glass Jar	Yes/No	
Metals (6020), Hg (7471A), TOC, CEC, pH & AVS/SEM	(1) 8oz. Glass Jar	Yes/No	

OBSERVATIONS / NOTES:

MAP:

Refer to Figure 3-3 of the QAPP for CTO 0166

Circle if Applicable:

MS/MSD

Duplicate ID No.: —

Signature(s): Troy Rojahn

Tetra Tech NUS, Inc.

SEDIMENT SAMPLE LOG SHEET

Project Site Name: NSWC CRANE
Project No.: N9060 CTO 0279

[] Surface Soil
[] Subsurface Soil
[X] Sediment
[] Other:
[] QA Sample Type:

Sample ID No.: 16SD19 0004
Sample Location: 16SD10
Sampled By: T. Rojahn
C.O.C. No.: 0982

Type of Sample:
[X] Low Concentration
[] High Concentration

GRAB SAMPLE DATA:

	Depth	Color	Description (Sand, Silt, Clay, Moisture, etc.)
Date: 4/1/03 Time: 1105 Method: Disposable Trowel Monitor Reading (ppm): —	0 - 4"	BRN	Gravely sand little silt saturated

COMPOSITE SAMPLE DATA:

Date:	Time	Depth	Color	Description (Sand, Silt, Clay, Moisture, etc.)
Method:				
Monitor Readings (Range in ppm):				

SAMPLE COLLECTION INFORMATION:

Analysis	Container Requirements	Collected	Other
SVOCs (8270C, SIM & 8151A) & Explosives (8330 & Picrates)	(1) 8oz. Glass Jar	Yes/No	
Metals (6020) & Hg (7471A)	(1) 8oz. Glass Jar	Yes/No	
Metals (6020), Hg (7471A), TOC, CEC, pH & AVS/SEM	(1) 8oz. Glass Jar	Yes/No	

OBSERVATIONS / NOTES:

MAP:

Refer to Figure 3-3 of the QAPP for CTO 0166

Circle if Applicable:

MS/MSD	Duplicate ID No.:
—	—

Signature(s): Ty Rojahn

Tetra Tech NUS, Inc.

SEDIMENT SAMPLE LOG SHEET

Project Site Name: NSWC CRANE
Project No.: N9060 CTO 0279

[] Surface Soil
[] Subsurface Soil
[X] Sediment
[] Other:
[] QA Sample Type:

Sample ID No.: 16SD11 0004
Sample Location: 16SD11
Sampled By: T. Rojahn
C.O.C. No.: 0982

Type of Sample:
[X] Low Concentration
[] High Concentration

GRAB SAMPLE DATA:

	Depth	Color	Description (Sand, Silt, Clay, Moisture, etc.)
Date: 4/01/03 Time: 1035 Method: Disposable Trowel Monitor Reading (ppm): —	0 - 4"	Dark Brn	Clayey silt - Damp Root material

COMPOSITE SAMPLE DATA:

	Time	Depth	Color	Description (Sand, Silt, Clay, Moisture, etc.)
Date:				
Method:				
Monitor Readings (Range in ppm):				

SAMPLE COLLECTION INFORMATION:

Analysis	Container Requirements	Collected	Other
SVOCs (8270C, SIM & 8151A) & Explosives (8330 & Picrates)	(1) 8oz. Glass Jar	Yes/No	
Metals (6020) & Hg (7471A)	(1) 8oz. Glass Jar	Yes/No	
Metals (6020), Hg (7471A), TOC, CEC, pH & AVS/SEM	(1) 8oz. Glass Jar	Yes/No	

OBSERVATIONS / NOTES:

MAP:

Refer to Figure 3-3 of the QAPP for CTO 0166

Circle if Applicable:

MS/MSD

Duplicate ID No.: FD040103 01

Signature(s):

APPENDIX C.1.4
SWMU 16 SOIL AND SEDIMENT SAMPLE LOG SHEETS
ROUND 2

Tetra Tech NUS, Inc.

SOIL & SEDIMENT SAMPLE LOG SHEET

Page___ of ___

Project Site Name: NSWC CRANE, SWMU16
Project No.: N9060, CTO 0279

[X] Surface Soil
[] Subsurface Soil
[] Sediment
[] Other:
[] QA Sample Type:

Sample ID No.: 16 SS 420002
Sample Location: SWMU 16
Sampled By: SG + TR
C.O.C. No.: 4829

Type of Sample:
[X] Low Concentration
[] High Concentration

GRAB SAMPLE DATA:

	Depth	Color	Description (Sand, Silt, Clay, Moisture, etc.)
Date: 12/5/03			
Time: 1155	0-2'	LT. BR/GREY	SILTY ~~SANDY~~ CLAY, 50% SILT ~~50% FINE SAND~~ W/ FILL MATRL + ORGANIC DEBRIS
Method: HAND AUGER			
Monitor Reading (ppm):			

COMPOSITE SAMPLE DATA:

Date:	Time	Depth	Color	Description (Sand, Silt, Clay, Moisture, etc.)
NA	NA	NA	NA	NA
Method:		0-1'	BLACK/BR	BLACK DETRITUS MTRL W/BR LOAM (SANDY)
NA		1'-2'	LT. BR/GREY	SILTY ~~SANDY~~ CLAY, 50% FINE SAND
Monitor Readings				
(Range in ppm):				
NA				

SAMPLE COLLECTION INFORMATION:

Analysis	Container Requirements	Collected	Other
Metals SW-846 6020 & Hg (7471A)	(1) 4oz Jar	YES	
Volatiles SW-846 8260B	(3) Encore Samplers	—	
Volatiles SW-846 8015B	(3) Encore Samplers	—	

OBSERVATIONS / NOTES:

MAP:

Circle if Applicable:

MS/MSD

Duplicate ID No.:

Signature(s): Scott Brian

Tetra Tech NUS, Inc.

SOIL & SEDIMENT SAMPLE LOG SHEET

Project Site Name: NSWC CRANE, SWMU16
Project No.: N9060, CTO 0279

[X] Surface Soil
[] Subsurface Soil
[] Sediment
[] Other:
[] QA Sample Type: MS/MSD

Sample ID No.: 16SS430002
Sample Location:
Sampled By: SG+TR
C.O.C. No.: 4829

Type of Sample:
[X] Low Concentration
[] High Concentration

GRAB SAMPLE DATA:

	Depth	Color	Description (Sand, Silt, Clay, Moisture, etc.)
Date: 12/5/03	0'-2'	LT. BR/BLACK	~~SANDY~~ SILTY CLAY W/ ~~SILT~~ TRACE SAND + ORGANIC MATTER
Time: 1210			
Method: HAND AUGER			
Monitor Reading (ppm):			

COMPOSITE SAMPLE DATA:

Date:	Time	Depth	Color	Description (Sand, Silt, Clay, Moisture, etc.)
NA	NA	NA	NA	NA
Method:		0'-1'	BLACK	~~SANDY~~ SILTY LOAM + ORGANIC DETRITUS
NA		1'-2'	LT. BR	~~SANDY~~ SILTY CLAY, WET + COHESIVE
Monitor Readings				
(Range in ppm):				
NA				

SAMPLE COLLECTION INFORMATION:

Analysis	Container Requirements	Collected	Other
Metals SW-846 6020 & Hg (7471A)	(1) 4oz Jar	YES	
Volatiles SW-846 8260B	(3) Encore Samplers	—	
Volatiles SW-846 8015B	(3) Encore Samplers	—	

OBSERVATIONS / NOTES:

MAP:

Circle if Applicable:

MS/MSD

Duplicate ID No.:

Signature(s): Scott Brian

Tetra Tech NUS, Inc.

SOIL & SEDIMENT SAMPLE LOG SHEET

Project Site Name: NSWC CRANE, SWMU16
Project No.: N9060, CTO 0279

[X] Surface Soil
[] Subsurface Soil
[] Sediment
[] Other:
[] QA Sample Type:

Sample ID No.: 16 SS 44 0002
Sample Location: SWMU 16
Sampled By: SG + TR
C.O.C. No.: 4829

Type of Sample:
[X] Low Concentration
[] High Concentration

GRAB SAMPLE DATA:

	Depth	Color	Description (Sand, Silt, Clay, Moisture, etc.)
Date: 12/5/03	0-2	BR	SILTY CLAY, MOIST + COHESIVE
Time: 1225			
Method: HAND AUGER			
Monitor Reading (ppm):			

COMPOSITE SAMPLE DATA:

Date:	Time	Depth	Color	Description (Sand, Silt, Clay, Moisture, etc.)
NA	NA	NA	NA	NA
Method:		0-1'	BLACK	SILTY LOAM W/ ORGANIC MATTER
NA		1-2'	BR	SILTY CLAY, 40% SILT
Monitor Readings				
(Range in ppm):				
NA				

SAMPLE COLLECTION INFORMATION:

Analysis	Container Requirements	Collected	Other
Metals SW-846 6020 & Hg (7471A)	(1) 4oz Jar	YES	
Volatiles SW-846 8260B	(3) Encore Samplers	—	
Volatiles SW-846 8015B	(3) Encore Samplers	—	

OBSERVATIONS / NOTES:

MAP:

Circle if Applicable:

MS/MSD

Duplicate ID No.:

Signature(s): S. Grier

Tetra Tech NUS, Inc.

SOIL & SEDIMENT SAMPLE LOG SHEET

Project Site Name: NSWC CRANE, SWMU16
Project No.: N9060, CTO 0279

[X] Surface Soil
[] Subsurface Soil
[] Sediment
[] Other:
[] QA Sample Type:

Sample ID No.: 16 SS 450002
Sample Location: SWMU 16
Sampled By: SG+TR
C.O.C. No.: 4829

Type of Sample:
[X] Low Concentration
[] High Concentration

GRAB SAMPLE DATA:

	Depth	Color	Description (Sand, Silt, Clay, Moisture, etc.)
Date: 12/5/03	0'-2'	LT. BR/GREY/BL	SILTY CLAY W/ORGANIC DETRITUS MAT'RL + FILL.
Time: 1237			
Method: HAND AUGER			
Monitor Reading (ppm):			

COMPOSITE SAMPLE DATA:

Date:	Time	Depth	Color	Description (Sand, Silt, Clay, Moisture, etc.)
NA	NA	NA	NA	NA
Method:		0'-1'	BLACK	DETRITUS + SILTY LOAM
NA		1'-2'	LT. BROWN/GR	SILTY CLAY W/ FILL MATRL
Monitor Readings				
(Range in ppm):				
NA				

SAMPLE COLLECTION INFORMATION:

Analysis	Container Requirements	Collected	Other
Metals SW-846 6020 & Hg (7471A)	(1) 4oz Jar	YES	
Volatiles SW-846 8260B	(3) Encore Samplers	—	
Volatiles SW-846 8015B	(3) Encore Samplers	—	

OBSERVATIONS / NOTES:

MAP:

Circle if Applicable:

MS/MSD	Duplicate ID No.: 16FD12050302

Signature(s): Scott Brun

Tetra Tech NUS, Inc.

SOIL & SEDIMENT SAMPLE LOG SHEET

Project Site Name: NSWC CRANE, SWMU16
Project No.: N9060, CTO 0279

[X] Surface Soil
[] Subsurface Soil
[] Sediment
[] Other:
[] QA Sample Type:

Sample ID No.: 16 SS 46 0002
Sample Location: SWMU 16
Sampled By: SG + TR
C.O.C. No.: 4829

Type of Sample:
[X] Low Concentration
[] High Concentration

GRAB SAMPLE DATA:

	Depth	Color	Description (Sand, Silt, Clay, Moisture, etc.)
Date: 12/5/03	0'-2'	BLK/BR/GREY	SILTY CLAY W/ ORGANIC DETRITIS MAT'RL + FILL MAT'RL
Time: 1255			
Method: HAND AUGER			
Monitor Reading (ppm):			

COMPOSITE SAMPLE DATA:

Date:	Time	Depth	Color	Description (Sand, Silt, Clay, Moisture, etc.)
NA	NA	NA	NA	NA
Method:		0-1'	BLACK/GR	ORGANIC DETRITIS W/ SILTY CLAY
NA		1'-2'	LT. BR/GR	SILTY CLAY W/ FILL
Monitor Readings				
(Range in ppm):				
NA				

SAMPLE COLLECTION INFORMATION:

Analysis	Container Requirements	Collected	Other
Metals SW-846 6020 & Hg (7471A)	(1) 4oz Jar	YES	
Volatiles SW-846 8260B	(3) Encore Samplers	—	
Volatiles SW-846 8015B	(3) Encore Samplers	—	

OBSERVATIONS / NOTES:

MAP:

Circle if Applicable:

MS/MSD

Duplicate ID No.:

Signature(s): Scott Grier

Tetra Tech NUS, Inc.

SOIL & SEDIMENT SAMPLE LOG SHEET

Project Site Name: NSWC CRANE, SWMU16
Project No.: N9060, CTO 0279

[X] Surface Soil
[] Subsurface Soil
[] Sediment
[] Other:
[] QA Sample Type:

Sample ID No.: 16SB470405
Sample Location: SWMU 16
Sampled By: SG + TR
C.O.C. No.: 4829

Type of Sample:
[X] Low Concentration
[] High Concentration

GRAB SAMPLE DATA:

	Depth	Color	Description (Sand, Silt, Clay, Moisture, etc.)
Date: 12/5/03 Time: 0940 Method: HAND AUGER Monitor Reading (ppm): 0.0	04-05	LT BR/GR	SILTY CLAY 60-70% clay w/ TRACE GRAVEL + ORGANIC DETRITIS WET + COHESIVE

COMPOSITE SAMPLE DATA:

Date:	Time	Depth	Color	Description (Sand, Silt, Clay, Moisture, etc.)
NA	NA	NA	NA	NA
Method:		0'-1'	GREY	GRAVEL + SANDY LOAM
NA		1'-5'	LT.BR./GR	SILTY CLAY w/TRACE GRAVEL + ORGANICS
Monitor Readings				
(Range in ppm):				
NA				

SAMPLE COLLECTION INFORMATION:

Analysis	Container Requirements	Collected	Other
Metals SW-846 6020	(1) 4oz Jar	—	
Volatiles SW-846 8260B	(3) Encore Samplers	YES	
Volatiles SW-846 8015B	(3) Encore Samplers	YES	

OBSERVATIONS / NOTES:

STANDING WATER IN HOLE ✗

MAP:

Circle if Applicable:

MS/MSD —

Duplicate ID No.: —

Signature(s): Scott Grier

Tetra Tech NUS, Inc.

SOIL & SEDIMENT SAMPLE LOG SHEET

Project Site Name: NSWC CRANE, SWMU16
Project No.: N9060, CTO 0279

[X] Surface Soil
[] Subsurface Soil
[] Sediment
[] Other:
[] QA Sample Type:

Sample ID No.: 16 SB 480203
Sample Location: 16 SWMU
Sampled By: SG + TR
C.O.C. No.: 4829

Type of Sample:
[X] Low Concentration
[] High Concentration

GRAB SAMPLE DATA:

	Depth	Color	Description (Sand, Silt, Clay, Moisture, etc.)
Date: 12/5/03	02'-03'	LT BR./GREY	SILTY CLAY, 70% clay w/ TRACE GRAVEL + ORGANICS WET + COHESIVE
Time: 1015			
Method: HAND AUGER			
Monitor Reading (ppm): 0.0			

COMPOSITE SAMPLE DATA:

Date:	Time	Depth	Color	Description (Sand, Silt, Clay, Moisture, etc.)
NA	NA	NA	NA	NA
Method:		0'-1'	GREY	GRAVEL + SANDY LOAM
NA		02'-03'	LT. BR./GR.	SILTY CLAY w/ TRACE GRAVEL + ORGANICS
Monitor Readings				
(Range in ppm):				
NA				

SAMPLE COLLECTION INFORMATION:

Analysis	Container Requirements	Collected	Other
Metals SW-846 6020	(1) 4oz Jar	—	
Volatiles SW-846 8260B	3X (3) Encore Samplers	YES	
Volatiles SW-846 8015B	3X (3) Encore Samplers	YES	

OBSERVATIONS / NOTES:

WATER STANDING IN HOLE

MAP:

Circle if Applicable:

MS/MSD

Duplicate ID No.:

Signature(s): Scott Grier

Tetra Tech NUS, Inc.

SOIL & SEDIMENT SAMPLE LOG SHEET

Project Site Name: NSWC CRANE, SWMU16
Project No.: N9060, CTO 0279

[X] Surface Soil
[] Subsurface Soil
[] Sediment
[] Other:
[] QA Sample Type:

Sample ID No.: 16SB490405
Sample Location: 16 SWMU
Sampled By: SG + TR
C.O.C. No.: 4829

Type of Sample:
[X] Low Concentration
[] High Concentration

GRAB SAMPLE DATA:

	Depth	Color	Description (Sand, Silt, Clay, Moisture, etc.)
Date: 12/5/03	04'-05'	LT BR./GR	SILTY CLAY 70% clay w/ TRACE GRAVEL + ORGANICS
Time: 1050			
Method: HAND AUGER			
Monitor Reading (ppm): 0.0			

COMPOSITE SAMPLE DATA:

Date:	Time	Depth	Color	Description (Sand, Silt, Clay, Moisture, etc.)
NA	NA	NA	NA	NA
Method:		0'-1'	GREY	GRAVEL + SANDY LOAM
NA		1'-5'	LT. BR./GR	SILTY CLAY w/TRACE GRAVEL+ORGANICS
Monitor Readings				WET + COHESIVE
(Range in ppm):				
NA				

SAMPLE COLLECTION INFORMATION:

Analysis	Container Requirements	Collected	Other
Metals SW-846 6020	(1) 4oz Jar	—	
Volatiles SW-846 8260B	(3) Encore Samplers	Yes	
Volatiles SW-846 8015B	(3) Encore Samplers	Yes	

OBSERVATIONS / NOTES:

STANDING WATER IN HOLE *

MAP:

Circle if Applicable:

MS/MSD	Duplicate ID No.:

Signature(s): Scott Bird

Tetra Tech NUS, Inc.

SOIL & SEDIMENT SAMPLE LOG SHEET

Project Site Name: NSWC CRANE, SWMU16
Project No.: N9060, CTO 0279

[X] Surface Soil
[] Subsurface Soil
[] Sediment
[] Other:
[] QA Sample Type:

Sample ID No.: 16SB500103
Sample Location: 16SWMU
Sampled By: SG+TR
C.O.C. No.: 4829

Type of Sample:
[X] Low Concentration
[] High Concentration

GRAB SAMPLE DATA:

	Depth	Color	Description (Sand, Silt, Clay, Moisture, etc.)
Date: 12/5/03			
Time: 1115	01'-03'	LT. BR./GR.	SILTY CLAY - 70% clay w/ TRACE GRAVEL + ORGANICS WET + COHESIVE
Method: HAND AUGER			
Monitor Reading (ppm): 0.0			

COMPOSITE SAMPLE DATA:

Date:	Time	Depth	Color	Description (Sand, Silt, Clay, Moisture, etc.)
NA	NA	NA	NA	NA
Method:		0'-1'	GREY	GRAVEL + SANDY LOAM
NA		1'-3'	LT.BR./GR	SILTY CLAY - TRACE GRAVEL + ORGANICS
Monitor Readings				MOIST + COHESIVE
(Range in ppm):				
NA				

SAMPLE COLLECTION INFORMATION:

Analysis	Container Requirements	Collected	Other
Metals SW-846 6020	(1) 4oz Jar	—	
Volatiles SW-846 8260B	(3) Encore Samplers	YES	
Volatiles SW-846 8015B	(3) Encore Samplers	YES	

OBSERVATIONS / NOTES:

MAP:

Circle if Applicable:

MS/MSD

Duplicate ID No.: 16FD12050301

Signature(s): Scott Grier

Tetra Tech NUS, Inc.

SOIL & SEDIMENT SAMPLE LOG SHEET

Project Site Name: NSWC CRANE, SWMU16
Project No.: N9060, CTO 0279

[] Surface Soil
[] Subsurface Soil
[X] Sediment
[] Other:
[] QA Sample Type:

Sample ID No.: 16SD120004
Sample Location: 16SD12
Sampled By: FW / MC
C.O.C. No.: 4811

Type of Sample:
[X] Low Concentration
[] High Concentration

GRAB SAMPLE DATA:

	Depth	Color	Description (Sand, Silt, Clay, Moisture, etc.)
Date: 10-25-03			
Time: 0945	0-4"	BROWN	SILTY SAND WET
Method: DISP. TROWEL			
Monitor Reading (ppm): —			

COMPOSITE SAMPLE DATA:

Date:	Time	Depth	Color	Description (Sand, Silt, Clay, Moisture, etc.)
NA	NA	NA	NA	NA
Method:				
NA				
Monitor Readings				
(Range in ppm):				
NA				

SAMPLE COLLECTION INFORMATION:

Analysis	Container Requirements	Collected	Other
Explosives & Miscellaneous Explosives SW-846 8330	(1) 4oz Jar	✓	
Metals SW-846 6020 & Mercury SW-846 7471A	(1) 4oz Jar	✓	
Selected Ion Monitoring - PAHs	(1) 4oz Jar	NO	
Volatiles SW-846 8260B	(1) 4oz Jar or (3) Encore Samplers	✓	
Volatiles SW-846 8015B	(1) 4oz Jar or (3) Encore Samplers	✓	

OBSERVATIONS / NOTES:

PHOTO # 0336

MAP:

Circle If Applicable:

MS/MSD

Duplicate ID No.:

Signature(s): FM G

Tetra Tech NUS, Inc.

SOIL & SEDIMENT SAMPLE LOG SHEET

Project Site Name: NSWC CRANE, SWMU16
Project No.: N9060, CTO 0279

[] Surface Soil
[] Subsurface Soil
[X] Sediment
[] Other:
[] QA Sample Type:

Sample ID No.: 16SD130004
Sample Location: 16SD13
Sampled By: EW/MC
C.O.C. No.: 4811

Type of Sample:
[X] Low Concentration
[] High Concentration

GRAB SAMPLE DATA:

	Depth	Color	Description (Sand, Silt, Clay, Moisture, etc.)
Date: 10-25-03	0-4"	BROWN	COURSE SAND + GRAVEL
Time: 1050			WET
Method: DIS. TROWEL			
Monitor Reading (ppm):			

COMPOSITE SAMPLE DATA:

Date:	Time	Depth	Color	Description (Sand, Silt, Clay, Moisture, etc.)
NA	NA	NA	NA	NA
Method:				
NA				
Monitor Readings				
(Range in ppm):				
NA				

SAMPLE COLLECTION INFORMATION:

Analysis	Container Requirements	Collected	Other
Explosives & Miscellaneous Explosives SW-846 8330	(1) 4oz Jar	✓	
Metals SW-846 6020 & Mercury SW-846 7471A	(1) 4oz Jar	✓	
Selected Ion Monitoring - PAHs	(1) 4oz Jar	NO	
Volatiles SW-846 8260B	(1) 4oz Jar or (3) Encore Samplers	✓	
Volatiles SW-846 8015B	(1) 4oz Jar or (3) Encore Samplers	✓	

OBSERVATIONS / NOTES:

PHOTO # 0338

MAP:

Circle if Applicable:

MS/MSD

Duplicate ID No.: 16FD10250301

Signature(s):

Tetra Tech NUS, Inc.

SOIL & SEDIMENT SAMPLE LOG SHEET

Project Site Name: NSWC CRANE, SWMU16
Project No.: N9060, CTO 0279

[] Surface Soil
[] Subsurface Soil
[X] Sediment
[] Other:
[] QA Sample Type:

Sample ID No.: 1650140004
Sample Location: 165014
Sampled By: MC
C.O.C. No.: 4807

Type of Sample:
[X] Low Concentration
[] High Concentration

GRAB SAMPLE DATA:

	Depth	Color	Description (Sand, Silt, Clay, Moisture, etc.)
Date: 10/24/03			
Time: 1510	4"	BRN	Silty Coarse Sand & Gravel Saturated
Method: Dis Trowel			
Monitor Reading (ppm): —			

COMPOSITE SAMPLE DATA:

Date:	Time	Depth	Color	Description (Sand, Silt, Clay, Moisture, etc.)
NA	NA	NA	NA	NA
Method:				
NA				
Monitor Readings				
(Range in ppm):				
NA				

SAMPLE COLLECTION INFORMATION:

Analysis	Container Requirements	Collected	Other
Explosives & Miscellaneous Explosives SW-846 8330	(1) 4oz Jar	✓	
Metals SW-846 6020 & Mercury SW-846 7471A	(1) 4oz Jar	✓	
Selected Ion Monitoring - PAHs	(1) 4oz Jar	NO	
Volatiles SW-846 8260B	(1) 4oz Jar or (~~3) Encore Samplers~~	✓	
Volatiles SW-846 8015B	(1) 4oz Jar or (~~2) Encore Samplers~~	✓	

OBSERVATIONS / NOTES:

MAP:

Circle if Applicable:

MS/MSD	Duplicate ID No.:
—	—

Signature(s): [illegible]

Tetra Tech NUS, Inc.

SOIL & SEDIMENT SAMPLE LOG SHEET

Project Site Name: NSWC CRANE, SWMU16
Project No.: N9060, CTO 0279

[] Surface Soil
[] Subsurface Soil
[X] Sediment
[] Other:
[] QA Sample Type:

Sample ID No.: 1650150004
Sample Location: 165015
Sampled By: MC
C.O.C. No.: 4807

Type of Sample:
[X] Low Concentration
[] High Concentration

GRAB SAMPLE DATA:

	Depth	Color	Description (Sand, Silt, Clay, Moisture, etc.)
Date: 10/24/03			
Time: 1420	44	BLK	CLAY & COARSE SAND (WET)
Method: Dis. Trowel			
Monitor Reading (ppm):			

COMPOSITE SAMPLE DATA:

Date:	Time	Depth	Color	Description (Sand, Silt, Clay, Moisture, etc.)
NA	NA	NA	NA	NA
Method:				
NA				
Monitor Readings				
(Range in ppm):				
NA				

SAMPLE COLLECTION INFORMATION:

Analysis	Container Requirements	Collected	Other
Explosives & Miscellaneous Explosives SW-846 8330	(1) 4oz Jar	✓	
Metals SW-846 6020 & Mercury SW-846 7471A	(1) 4oz Jar	✓	
Selected Ion Monitoring - PAHs	(1) 4oz Jar	—	
Volatiles SW-846 8260B	(1) 4oz Jar or ~~(3) Encore Samplers~~	✓	
Volatiles SW-846 8015B	(1) 4oz Jar or ~~(3) Encore Samplers~~	✓	

OBSERVATIONS / NOTES:

PHOTO # (0331) MATT IN PHOTO

MAP:

Circle if Applicable:

MS/MSD —

Duplicate ID No.: —

Signature(s):

Tetra Tech NUS, Inc.

SOIL & SEDIMENT SAMPLE LOG SHEET

Project Site Name: NSWC CRANE, SWMU16
Project No.: N9060, CTO 0279

[] Surface Soil
[] Subsurface Soil
[X] Sediment
[] Other:
[] QA Sample Type:

Sample ID No.: 165D160004
Sample Location: 165D16
Sampled By: MC
C.O.C. No.: 4807

Type of Sample:
[X] Low Concentration
[] High Concentration

GRAB SAMPLE DATA:

	Depth	Color	Description (Sand, Silt, Clay, Moisture, etc.)
Date: 10/24/03			
Time: 1330	4"	BRN	Clayey silt Dry
Method: Dis Trowel			
Monitor Reading (ppm):			

COMPOSITE SAMPLE DATA:

Date:	Time	Depth	Color	Description (Sand, Silt, Clay, Moisture, etc.)
NA	NA	NA	NA	NA
Method:				
NA				
Monitor Readings				
(Range in ppm):				
NA				

SAMPLE COLLECTION INFORMATION:

Analysis	Container Requirements	Collected	Other
Explosives & Miscellaneous Explosives SW-846 8330	(1) 4oz Jar	✓	
Metals SW-846 6020 & Mercury SW-846 7471A	(1) 4oz Jar	✓	
Selected Ion Monitoring - PAHs	(1) 4oz Jar	NO	
Volatiles SW-846 8260B	~~(1) 4oz Jar or~~ (3) Encore Samplers	✓	
Volatiles SW-846 8015B	~~(1) 4oz Jar or~~ (3) Encore Samplers	✓	

OBSERVATIONS / NOTES:

MAP:

Circle if Applicable:

MS/MSD —

Duplicate ID No.: —

Signature(s): [signature]

Tetra Tech NUS, Inc.

SOIL & SEDIMENT SAMPLE LOG SHEET

Project Site Name: NSWC CRANE, SWMU16
Project No.: N9060, CTO 0279

[] Surface Soil
[] Subsurface Soil
[X] Sediment
[] Other:
[] QA Sample Type:

Sample ID No.: 16SD170004
Sample Location: 165017
Sampled By: FWI
C.O.C. No.: 4807

Type of Sample:
[X] Low Concentration
[] High Concentration

GRAB SAMPLE DATA:

	Depth	Color	Description (Sand, Silt, Clay, Moisture, etc.)
Date: 10/24/03			
Time: 1100	4"	BRN	Silt Sand & Gravel
Method: Dis Trowel			Root Mat. Saturated
Monitor Reading (ppm):			

COMPOSITE SAMPLE DATA:

Date:	Time	Depth	Color	Description (Sand, Silt, Clay, Moisture, etc.)
NA	NA	NA	NA	NA
Method:				
NA				
Monitor Readings				
(Range in ppm):				
NA				

SAMPLE COLLECTION INFORMATION:

Analysis	Container Requirements	Collected	Other
Explosives & Miscellaneous Explosives SW-846 8330	3 x (1) 4oz Jar	YES	
Metals SW-846 6020 & Mercury SW-846 7471A	3 x (1) 4oz Jar	YES	
Selected Ion Monitoring - PAHs	(1) 4oz Jar	NO	
Volatiles SW-846 8260B 3x	(1) 4oz Jar or ~~(3) Encore Samplers~~	YES	
Volatiles SW-846 8015B 3x	(1) 4oz Jar or ~~(3) Encore Samplers~~	YES	

OBSERVATIONS / NOTES:

PHOTO 0329

MAP:

Circle if Applicable:

MS/MSD	Duplicate ID No.:
YES	16FD10240302

Signature(s):

Tetra Tech NUS, Inc.

SOIL & SEDIMENT SAMPLE LOG SHEET

Project Site Name: NSWC CRANE, SWMU16
Project No.: N9060, CTO 0279

[] Surface Soil
[] Subsurface Soil
[X] Sediment
[] Other:
[] QA Sample Type:

Sample ID No.: 16SD 180004
Sample Location: 16SD18
Sampled By: EW/MC/TL
C.O.C. No.: 4807

Type of Sample:
[X] Low Concentration
[] High Concentration

GRAB SAMPLE DATA:

	Depth	Color	Description (Sand, Silt, Clay, Moisture, etc.)
Date: 10/24/03			
Time: 1410	4"	BRN	Coarse Sand & Gravel Saturated
Method: Dis Trowel			
Monitor Reading (ppm): —			

COMPOSITE SAMPLE DATA:

Date:	Time	Depth	Color	Description (Sand, Silt, Clay, Moisture, etc.)
NA	NA	NA	NA	NA
Method:				
NA				
Monitor Readings				
(Range in ppm):				
NA				

SAMPLE COLLECTION INFORMATION:

Analysis	Container Requirements	Collected	Other
Explosives & Miscellaneous Explosives SW-846 8330	(1) 4oz Jar	✓	
Metals SW-846 6020 & Mercury SW-846 7471A	(1) 4oz Jar	✓	
Selected Ion Monitoring - PAHs	(1) 4oz Jar	NO	
Volatiles SW-846 8260B	(1) 4oz Jar or ~~(3) Encore Samplers~~	✓	
Volatiles SW-846 8015B	(1) 4oz Jar or ~~(3) Encore Samplers~~	✓	

OBSERVATIONS / NOTES:

MAP:

Circle if Applicable:

MS/MSD

Duplicate ID No.: —

Signature(s): Terry Lopez

Tetra Tech NUS, Inc.

SOIL & SEDIMENT SAMPLE LOG SHEET

Project Site Name: NSWC CRANE, SWMU16
Project No.: N9060, CTO 0279

[] Surface Soil
[] Subsurface Soil
[X] Sediment
[] Other:
[] QA Sample Type:

Sample ID No.: 165D190004
Sample Location: 165D19
Sampled By: FW
C.O.C. No.: 4807

Type of Sample:
[X] Low Concentration
[] High Concentration

GRAB SAMPLE DATA:

	Depth	Color	Description (Sand, Silt, Clay, Moisture, etc.)
Date: 10/24/03			
Time: 1020	4"	BRN	FINE → COARSE SAND & GRAVEL DAMP
Method: Direct			
Monitor Reading (ppm): --			

COMPOSITE SAMPLE DATA:

Date:	Time	Depth	Color	Description (Sand, Silt, Clay, Moisture, etc.)
NA	NA	NA	NA	NA
Method:				
NA				
Monitor Readings				
(Range in ppm):				
NA				

SAMPLE COLLECTION INFORMATION:

Analysis	Container Requirements	Collected	Other
Explosives & Miscellaneous Explosives SW-846 8330	(1) 4oz Jar	✓	
Metals SW-846 6020 & Mercury SW-846 7471A	(1) 4oz Jar	✓	
Selected Ion Monitoring - PAHs	(1) 4oz Jar	NO	
Volatiles SW-846 8260B	~~(1) 4oz Jar or~~ (3) Encore Samplers	✓	
Volatiles SW-846 8015B	~~(1) 4oz Jar or~~ (3) Encore Samplers	✓	

OBSERVATIONS / NOTES:

PHOTO #0328

MAP:

Circle if Applicable:

MS/MSD ✓

Duplicate ID No.: —

Signature(s): [signature]

Tetra Tech NUS, Inc.

SOIL & SEDIMENT SAMPLE LOG SHEET

Project Site Name: NSWC CRANE, SWMU16
Project No.: N9060, CTO 0279

[] Surface Soil
[] Subsurface Soil
[X] Sediment
[] Other:
[] QA Sample Type:

Sample ID No.: 165D200004
Sample Location: 165D20
Sampled By: FW/MC
C.O.C. No.: 4811

Type of Sample:
[X] Low Concentration
[] High Concentration

GRAB SAMPLE DATA:

	Depth	Color	Description (Sand, Silt, Clay, Moisture, etc.)
Date: 10/25/03			
Time: 1110	4"	BROWN	CLAY, SAND, + GRAVEL
Method: DIS TROWEL			WET
Monitor Reading (ppm): –			

COMPOSITE SAMPLE DATA:

Date:	Time	Depth	Color	Description (Sand, Silt, Clay, Moisture, etc.)
NA	NA	NA	NA	NA
Method:				
NA				
Monitor Readings				
(Range in ppm):				
NA				

SAMPLE COLLECTION INFORMATION:

Analysis	Container Requirements	Collected	Other
Explosives & Miscellaneous Explosives SW-846 8330	(1) 4oz Jar	✓	
Metals SW-846 6020 & Mercury SW-846 7471A	(1) 4oz Jar	✓	
Selected Ion Monitoring - PAHs	(1) 4oz Jar	NO	
Volatiles SW-846 8260B	(1) 4oz Jar or (3) Encore Samplers	✓	
Volatiles SW-846 8015B	(1) 4oz Jar or (3) Encore Samplers	✓	

OBSERVATIONS / NOTES:

MAP:

Circle if Applicable:

MS/MSD	Duplicate ID No.:
—	—

Signature(s): FW

Tetra Tech NUS, Inc.

SOIL & SEDIMENT SAMPLE LOG SHEET

Project Site Name: NSWC CRANE, SWMU16
Project No.: N9060, CTO 0279

[] Surface Soil
[] Subsurface Soil
[X] Sediment
[] Other:
[] QA Sample Type:

Sample ID No.: 16SD210004
Sample Location: 16SD21
Sampled By: MC/EW/TK
C.O.C. No.: 4807

Type of Sample:
[X] Low Concentration
[] High Concentration

GRAB SAMPLE DATA:

	Depth	Color	Description (Sand, Silt, Clay, Moisture, etc.)
Date: 10/24/03			
Time: 1525	4"	BRN	Coarse Sand Fine Gravel (Saturated)
Method: Dis Trowel			
Monitor Reading (ppm):			

COMPOSITE SAMPLE DATA:

Date:	Time	Depth	Color	Description (Sand, Silt, Clay, Moisture, etc.)
NA	NA	NA	NA	NA
Method:				
NA				
Monitor Readings				
(Range in ppm):				
NA				

SAMPLE COLLECTION INFORMATION:

Analysis	Container Requirements	Collected	Other
Explosives & Miscellaneous Explosives SW-846 8330	(1) 4oz Jar	✓	
Metals SW-846 6020 & Mercury SW-846 7471A	(1) 4oz Jar	✓	
Selected Ion Monitoring - PAHs	(1) 4oz Jar	—	
Volatiles SW-846 8260B	(1) 4oz Jar or (~~3) Encore Samplers~~	✓	
Volatiles SW-846 8015B	(1) 4oz Jar or (~~3) Encore Samplers~~	✓	

OBSERVATIONS / NOTES:

MAP:

Circle if Applicable:

MS/MSD —

Duplicate ID No.: —

Signature(s):

Tetra Tech NUS, Inc.

SOIL & SEDIMENT SAMPLE LOG SHEET

Project Site Name: NSWC CRANE, SWMU16
Project No.: N9060, CTO 0279

[] Surface Soil
[] Subsurface Soil
[X] Sediment
[] Other:
[] QA Sample Type:

Sample ID No.: 165022 0004
Sample Location: 165022
Sampled By: EW/TR
C.O.C. No.: 4807

Type of Sample:
[X] Low Concentration
[] High Concentration

GRAB SAMPLE DATA:

	Depth	Color	Description (Sand, Silt, Clay, Moisture, etc.)
Date: 10/24/03			
Time: 1611	4"	Blk	Silt some Sand Root Mat. Damp
Method: Dis trowel			
Monitor Reading (ppm):			

COMPOSITE SAMPLE DATA:

Date:	Time	Depth	Color	Description (Sand, Silt, Clay, Moisture, etc.)
NA	NA	NA	NA	NA
Method:				
NA				
Monitor Readings				
(Range in ppm):				
NA				

SAMPLE COLLECTION INFORMATION:

Analysis	Container Requirements	Collected	Other
Explosives & Miscellaneous Explosives SW-846 8330	(1) 4oz Jar	No	
Metals SW-846 6020 & Mercury SW-846 7471A	(1) 4oz Jar	No	
Selected Ion Monitoring - PAHs	(1) 4oz Jar	YES	
Volatiles SW-846 8260B	(1) 4oz Jar or (3) Encore Samplers	No	
Volatiles SW-846 8015B	(1) 4oz Jar or (3) Encore Samplers	No	

OBSERVATIONS / NOTES:

PHOTO 334

MAP:

Circle if Applicable:

MS/MSD	Duplicate ID No.:
—	—

Signature(s):

Tetra Tech NUS, Inc.

SOIL & SEDIMENT SAMPLE LOG SHEET

Project Site Name: NSWC CRANE, SWMU16
Project No.: N9060, CTO 0279

[] Surface Soil
[] Subsurface Soil
[X] Sediment
[] Other:
[] QA Sample Type:

Sample ID No.: 165D220004
Sample Location: 16SD22
Sampled By: FW/TR
C.O.C. No.: 4820

Type of Sample:
[X] Low Concentration
[] High Concentration

GRAB SAMPLE DATA:

	Depth	Color	Description (Sand, Silt, Clay, Moisture, etc.)
Date: 11/11/03			
Time: 1400	4"		
Method: Dis Trowel			
Monitor Reading (ppm): —			

COMPOSITE SAMPLE DATA:

Date:	Time	Depth	Color	Description (Sand, Silt, Clay, Moisture, etc.)
NA	NA	NA	NA	NA
Method:				
NA				
Monitor Readings				
(Range in ppm):				
NA				

SAMPLE COLLECTION INFORMATION:

Analysis	Container Requirements	Collected	Other
Explosives & Miscellaneous Explosives SW-846 8330	(1) 4oz Jar		
Metals SW-846 6020 & Mercury SW-846 7471A	(1) 4oz Jar		
Selected Ion Monitoring - PAHs	(1) 4oz Jar		
Volatiles SW-846 8260B	~~(1) 4oz Jar or~~ (3) Encore Samplers	✓	
Volatiles SW-846 8015B	~~(1) 4oz Jar or~~ (3) Encore Samplers	✓	
Moisture for VOA analysis	(1) 4oz Jar	✓	

OBSERVATIONS / NOTES:

MAP:

Circle if Applicable:

MS/MSD

Duplicate ID No.:

Signature(s):

APPENDIX C.2.1
SWMU 13 SURFACE WATER SAMPLE LOG SHEETS
ROUND 1

Tetra Tech NUS, Inc.

SURFACE WATER SAMPLE LOG SHEET

Project Site Name: NSWC CRANE
Project No.: N9060 CTO 0279

Sample ID No.: 13SW01 01 EC
Sample Location: 13SW01
Sampled By: T. Rojahn
C.O.C. No.: 0973

[X] Stream
[] Spring
[] Pond
[] Lake
[] Other: Drainage Ditch
[] QA Sample Type:

Type of Sample:
[X] Low Concentration
[] High Concentration

SAMPLING DATA:

	Color Visual	pH Standard	S.C. mS/cm	Temp. Degrees C	Turbidity NTU	DO mg/l	Salinity %	ORP mV
Date: 3/29/03 Time: 1030 Depth: 1/2" Method: Direct	CLEAR	7.49	262	9.29	11	11.7 ~~1.06~~	NA	95

SAMPLE COLLECTION INFORMATION:

Analysis	Preservative	Container Requirements	Collected
SVOCs (8270C)	4°C	(2) 1 L Amber	—
SVOCs (SIM)	4°C	(2) 1 L Amber	—
SVOCs (8151A)	4°C	(2) 1 L Amber	—
Explosives (8330)	4°C	(2) 1 L Amber	Yes
Total Metals (6020) & Tolal Hg (7470A)	HNO3 / 4°C	(1) 1 L HDPE	Yes
Dissolved Metals (6020) & Dis. Hg (7470A)	HNO3/ 4°C	(1) 1 L HDPE	Yes
Ammonia (350.1) & Nitrate (353.2)	H2SO4/ 4°C	(1) 1 L HDPE	Yes

OBSERVATIONS / NOTES:

Flow < 1 gpm @ Culvert

MAP:

Refer to Figure 3-2 of the QAPP for CTO 0166

Circle if Applicable:

MS/MSD —

Duplicate ID No.: —

Signature(s): Ty Rojahn

Tetra Tech NUS, Inc.

SURFACE WATER SAMPLE LOG SHEET

Project Site Name: NSWC CRANE
Project No.: N9060 CTO 0279

Sample ID No.: 13SW 02 01 EF
Sample Location: 13SW 02
Sampled By: T. Rojahn
C.O.C. No.: 0973

[X] Stream
[] Spring
[] Pond
[] Lake
[] Other: Drainage Ditch
[] QA Sample Type:

Type of Sample:
[X] Low Concentration
[] High Concentration

SAMPLING DATA:

	Color	pH	S.C.	Temp.	Turbidity	DO	Salinity	ORP
	Visual	Standard	mS/cm	Degrees C	NTU	mg/l	%	mV
Date: 3/29/03								
Time: 1100								
Depth: <1"	Sl Tan	7.24	280	9.29	59	9.28	NA	113
Method: Direct								

SAMPLE COLLECTION INFORMATION:

Analysis	Preservative	Container Requirements	Collected
SVOCs (8270C)	4° C	(2) 1 L Amber	—
SVOCs (SIM)	4° C	(2) 1 L Amber	—
SVOCs (8151A)	4° C	(2) 1 L Amber	—
Explosives (8330)	4° C	(2) 1 L Amber	Yes
Total Metals (6020) & Total Hg (7470A)	HNO3 / 4° C	(1) 1 L HDPE	Yes
Dissolved Metals (6020) & Dis. Hg (7470A)	HNO3/ 4° C	(1) 1 L HDPE	Yes
Ammonia (350.1) & Nitrate (353.2)	H2SO4/ 4° C	(1) 1 L HDPE	Yes

OBSERVATIONS / NOTES:

Flow 1-5 gpm @ Culvert

MAP:

Refer to Figure 3-2 of the QAPP for CTO 0166

Circle if Applicable:

MS/MSD —

Duplicate ID No.: —

Signature(s): Tey Rojahn

Tetra Tech NUS, Inc.

SURFACE WATER SAMPLE LOG SHEET

Project Site Name: NSWC CRANE
Project No.: N9060 CTO 0279

[X] Stream
[] Spring
[] Pond
[] Lake
[] Other:
[] QA Sample Type:

Sample ID No.: 13SW03 01 E F
Sample Location: 13SW03
Sampled By: T. Rojahn
C.O.C. No.: 0973

Type of Sample:
[X] Low Concentration
[] High Concentration

SAMPLING DATA:

	Color Visual	pH Standard	S.C. mS/cm	Temp. Degrees C	Turbidity NTU	DO mg/l	Salinity %	ORP mV
Date: 3/29/03								
Time: 1420								
Depth: SURFACE								
Method: Direct	CLEAR	7.39	.496	11	16	9.12	NA	131

SAMPLE COLLECTION INFORMATION:

Analysis	Preservative	Container Requirements	Collected
SVOCs (8270C)	4°C	(2) 1 L Amber	—
SVOCs (SIM)	4°C	(2) 1 L Amber	—
SVOCs (8151A)	4°C	(2) 1 L Amber	—
Explosives (8330)	4°C	(2) 1 L Amber	Yes
Total Metals (6020) & Total Hg (7470A)	HNO3 / 4°C	(1) 1 L HDPE	Yes
Dissolved Metals (6020) & Dis. Hg (7470A)	HNO3/ 4°C	(1) 1 L HDPE	Yes
Ammonia (350.1) & Nitrate (353.2)	H2SO4/ 4°C	(1) 1 L HDPE	Yes

OBSERVATIONS / NOTES:

Flow ~1-5 gpm
IN GRASSY AREA

MAP:

Refer to Figure 3-2 of the QAPP for CTO 0166

Circle if Applicable:

MS/MSD —

Duplicate ID No.: —

Signature(s): Tey Rojahn

Tetra Tech NUS, Inc.

SURFACE WATER SAMPLE LOG SHEET

Project Site Name: NSWC CRANE
Project No.: N9060 CTO 0279

[] Stream
[] Spring
[] Pond
[] Lake
[] Other: Drainage Ditch
[] QA Sample Type:

Sample ID No.: 13SW 04 01 EF
Sample Location: 13SW
Sampled By: T. Rojahn
C.O.C. No.: 0973

Type of Sample:
[X] Low Concentration
[] High Concentration

SAMPLING DATA:

	Color Visual	pH Standard	S.C. mS/cm	Temp. Degrees C	Turbidity NTU	DO mg/l	Salinity %	ORP mV
Date: 3/29/03								
Time: 1440								
Depth: 3"								
Method: DIRECT FILL	SI TAN	7.75	.191	10.65	298	10.41	NA	174

SAMPLE COLLECTION INFORMATION:

Analysis	Preservative	Container Requirements	Collected
SVOCs (8270C)	4° C	(2) 1 L Amber	Yes
SVOCs (SIM)	4° C	(2) 1 L Amber	Yes
SVOCs (8151A)	4° C	(2) 1 L Amber	Yes
Explosives (8330)	4° C	(2) 1 L Amber	Yes
Total Metals (6020) & Total Hg (7470A)	HNO3 / 4° C	(1) 1 L HDPE	Yes
Dissolved Metals (6020) & Dis. Hg (7470A)	HNO3/ 4° C	(1) 1 L HDPE	Yes
Ammonia (350.1) & Nitrate (353.2)	H2SO4/ 4° C	(1) 1 L HDPE	Yes

OBSERVATIONS / NOTES:

Flow 1-5 gal
@ Culvert W. side of Road

MAP:

Refer to Figure 3-2 of the QAPP for CTO 0166

Circle if Applicable:

MS/MSD —

Duplicate ID No.: —

Signature(s): Tony Rojahn

Tetra Tech NUS, Inc.

SURFACE WATER SAMPLE LOG SHEET

Project Site Name: NSWC CRANE
Project No.: N9060 CTO 0279

[X] Stream
[] Spring
[] Pond
[] Lake
[] Other: DRAINAGE Ditch
[] QA Sample Type:

Sample ID No.: 13SW05 01 & F
Sample Location: 13SW05
Sampled By: T. Rojahn
C.O.C. No.: 0973

Type of Sample:
[X] Low Concentration
[] High Concentration

SAMPLING DATA:

	Color Visual	pH Standard	S.C. mS/cm	Temp. Degrees C	Turbidity NTU	DO mg/l	Salinity %	ORP mV
Date: 3/29/03								
Time: 1510								
Depth: 1-3" SURFACE	V.SL. TAN	7.58	0.203	10.49	36	10.8	NA	109
Method: DIRECT								

SAMPLE COLLECTION INFORMATION:

Analysis	Preservative	Container Requirements	Collected
SVOCs (8270C)	4°C	(2) 1 L Amber	Yes
SVOCs (SIM)	4°C	(2) 1 L Amber	Yes
SVOCs (8151A)	4°C	(2) 1 L Amber	Yes
Explosives (8330)	4°C	(2) 1 L Amber	Yes
Total Metals (6020) & Total Hg (7470A)	HNO3 / 4°C	(1) 1 L HDPE	Yes
Dissolved Metals (6020) & Dis. Hg (7470A)	HNO3/ 4°C	(1) 1 L HDPE	Yes
Ammonia (350.1) & Nitrate (353.2)	H2SO4/ 4°C	(1) 1 L HDPE	Yes

OBSERVATIONS / NOTES:

Culvert W. side of Road.
Flow 1-5 gal

MAP:

Refer to Figure 3-2 of the QAPP for CTO 0166

Circle if Applicable:

MS/MSD —

Duplicate ID No.: —

Signature(s): [signature]

Tetra Tech NUS, Inc.

SURFACE WATER SAMPLE LOG SHEET

Project Site Name: NSWC CRANE
Project No.: N9060 CTO 0279

[] Stream
[] Spring
[] Pond
[] Lake
[] Other: Drainage Ditch
[] QA Sample Type:

Sample ID No.: 13SW06 01 EF
Sample Location: 13SW06
Sampled By: T. Rojahn
C.O.C. No.: 0973

Type of Sample:
[X] Low Concentration
[] High Concentration

SAMPLING DATA:

	Color Visual	pH Standard	S.C. mS/cm	Temp. Degrees C	Turbidity NTU	DO mg/l	Salinity %	ORP mV
Date: 3/29/03 Time: 1535 Depth: SURFACE Method: DIRECT	Clear	7.41	0.543	10.44		9.62	NA	640

SAMPLE COLLECTION INFORMATION:

Analysis	Preservative	Container Requirements	Collected
SVOCs (8270C)	4°C	(2) 1 L Amber	YES
SVOCs (SIM)	4°C	(2) 1 L Amber	YES
SVOCs (8151A)	4°C	(2) 1 L Amber	YES
Explosives (8330)	4°C	(2) 1 L Amber	Yes
Total Metals (6020) & Total Hg (7470A)	HNO3 / 4°C	(1) 1 L HDPE	Yes
Dissolved Metals (6020) & Dis. Hg (7470A)	HNO3/ 4°C	(1) 1 L HDPE	Yes
Ammonia (350.1) & Nitrate (353.2)	H2SO4/ 4°C	(1) 1 L HDPE	Yes

OBSERVATIONS / NOTES:

FLOW: 1-2 gal/min
West side of Road @ Culvert

MAP:

Refer to Figure 3-2 of the QAPP for CTO 0166

Circle if Applicable:

MS/MSD	Duplicate ID No.:
—	—

Signature(s): Tony Rojahn

Tetra Tech NUS, Inc.

SURFACE WATER SAMPLE LOG SHEET

Project Site Name: NSWC CRANE
Project No.: N9060 CTO 0279

[] Stream
[] Spring
[] Pond
[] Lake
[] Other: Drainage Ditch
[] QA Sample Type:

Sample ID No.: 13SW 0701 & F
Sample Location: 13SW 07
Sampled By: T. Rojahn
C.O.C. No.: 0973 & 0980

Type of Sample:
[X] Low Concentration
[] High Concentration

SAMPLING DATA:

	Color Visual	pH Standard	S.C. mS/cm	Temp. Degrees C	Turbidity NTU	DO mg/l	Salinity %	ORP mV
Date: 3/29/03 Time: 1555 Depth: Surface ~2" Method: Direct	Sl. tan	7.32	1394	9.8	352	8.13	NA	177

SAMPLE COLLECTION INFORMATION:

Analysis	Preservative	Container Requirements	Collected
SVOCs (8270C)	4°C	(2) 1 L Amber	NO
SVOCs (SIM)	4°C	(2) 1 L Amber	↓
SVOCs (8151A)	4°C	(2) 1 L Amber	↓
Explosives (8330)	4°C	(2) 1 L Amber	Yes
Total Metals (6020) & Tolal Hg (7470A)	HNO3 / 4°C	(1) 1 L HDPE	Yes
Dissolved Metals (6020) & Dis. Hg (7470A)	HNO3/ 4°C	(1) 1 L HDPE	Yes
Ammonia (350.1) & Nitrate (353.2)	H2SO4/ 4°C	(1) 1 L HDPE	Yes

OBSERVATIONS / NOTES:

Culvert W side of Road
Flow <1gpm

MAP:

Refer to Figure 3-2 of the QAPP for CTO 0166

Circle if Applicable:

MS/MSD —

Duplicate ID No.: —

Signature(s): [signature]

Tetra Tech NUS, Inc.

SURFACE WATER SAMPLE LOG SHEET

Project Site Name: NSWC CRANE
Project No.: N9060 CTO 0279

[] Stream
[] Spring
[] Pond
[] Lake
[X] Other: DRAINAGE DITCH
[] QA Sample Type:

Sample ID No.: 13SW08 01 EF
Sample Location: 13SW08
Sampled By: T. Rojahn / B. BALKOVEC
C.O.C. No.: 0986

Type of Sample:
[X] Low Concentration
[] High Concentration

SAMPLING DATA:

	Color Visual	pH Standard	S.C. mS/cm	Temp. Degrees C	Turbidity NTU	DO mg/l	Salinity %	ORP mV
Date: 5/8/03								
Time: 0910								
Depth: 2"								
Method: GRAB	CLEAR	6.13	0.462	15-18	31	6.91	NA	+150.6

SAMPLE COLLECTION INFORMATION:

Analysis	Preservative	Container Requirements	Collected
SVOCs (8270C)	4°C	(2) 1 L Amber	—
SVOCs (SIM)	4°C	(2) 1 L Amber	—
SVOCs (8151A)	4°C	(2) 1 L Amber	—
Explosives (8330)	4°C	(2) 1 L Amber	Yes
Total Metals (6020) & Total Hg (7470A)	HNO3 / 4°C	(1) 1 L HDPE	Yes
Dissolved Metals (6020) & Dis. Hg (7470A)	HNO3/ 4°C	(1) 1 L HDPE	Yes
Ammonia (350.1) & Nitrate (353.2)	H2SO4/ 4°C	(1) 1 L HDPE	Yes

OBSERVATIONS / NOTES:

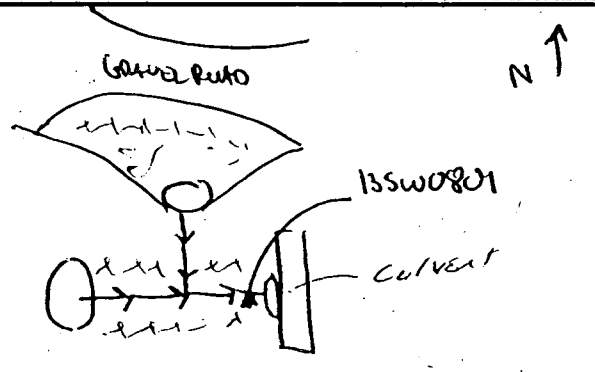

FLOW COMING FROM N + W

≈ 1.5 gpm FLOW

MAP:

Refer to Figure 3-2 of the QAPP for CTO 0166

Circle if Applicable:

MS/MSD —

Duplicate ID No.: —

Signature(s): Robert Balkovec

Tetra Tech NUS, Inc.

SURFACE WATER SAMPLE LOG SHEET

Project Site Name: NSWC CRANE
Project No.: N9060 CTO 0279

[] Stream
[] Spring
[] Pond
[] Lake
[X] Other: Drainage Ditch
[] QA Sample Type:

Sample ID No.: 13SW 09 01 EF
Sample Location: 13SW 09
Sampled By: T. Rojahn
C.O.C. No.: 0980

Type of Sample:
[X] Low Concentration
[] High Concentration

SAMPLING DATA:

	Color Visual	pH Standard	S.C. mS/cm	Temp. Degrees C	Turbidity NTU	DO mg/l	Salinity %	ORP mV
Date: 3/29/03								
Time: 1645								
Depth: Surface - 3"								
Method: Direct	Clear	8.48	0.138	11.0	45	9.81	NA	120

SAMPLE COLLECTION INFORMATION:

Analysis	Preservative	Container Requirements	Collected
SVOCs (8270C)	4°C	(2) 1 L Amber	—
SVOCs (SIM)	4°C	(2) 1 L Amber	—
SVOCs (8151A)	4°C	(2) 1 L Amber	—
Explosives (8330)	4°C	(2) 1 L Amber	Yes
Total Metals (6020) & Total Hg (7470A)	HNO3 / 4°C	(1) 1 L HDPE	Yes
Dissolved Metals (6020) & Dis. Hg (7470A)	HNO3/ 4°C	(1) 1 L HDPE	Yes
Ammonia (350.1) & Nitrate (353.2)	H2SO4/ 4°C	(1) 1 L HDPE	Yes

OBSERVATIONS / NOTES:

@ Culvert inside Mine Fill B
South end

Flow <1 gpm

MAP:

Refer to Figure 3-2 of the QAPP for CTO 0166

Circle if Applicable:

MS/MSD: —

Duplicate ID No.: —

Signature(s): Tony Rojahn

Tetra Tech NUS, Inc.

SURFACE WATER SAMPLE LOG SHEET

Project Site Name: NSWC CRANE
Project No.: N9060 CTO 0279

Sample ID No.: 13SW 10 01 & F
Sample Location: 13SW 10
Sampled By: T. Rojahn
C.O.C. No.: 0980

[X] Stream
[] Spring
[] Pond
[] Lake
[] Other:
[] QA Sample Type:

Type of Sample:
[X] Low Concentration
[] High Concentration

SAMPLING DATA:

	Color	pH	S.C.	Temp.	Turbidity	DO	Salinity	ORP
	Visual	Standard	mS/cm	Degrees C	NTU	mg/l	%	mV
Date: 3/29/03								
Time: 1700								
Depth: SURFACE 1'	V.SLTAN	7.74	.199 ~~.283~~	9.3	150	9.95	NA	145
Method: DIRECT								

SAMPLE COLLECTION INFORMATION:

Analysis	Preservative	Container Requirements	Collected
SVOCs (8270C)	4°C	(2) 1 L Amber	—
SVOCs (SIM)	4°C	(2) 1 L Amber	—
SVOCs (8151A)	4°C	(2) 1 L Amber	—
Explosives (8330)	4°C	(2) 1 L Amber	Yes
Total Metals (6020) & Total Hg (7470A)	HNO3 / 4°C	(1) 1 L HDPE	Yes
Dissolved Metals (6020) & Dis. Hg (7470A)	HNO3/ 4°C	(1) 1 L HDPE	Yes
Ammonia (350.1) & Nitrate (353.2)	H2SO4/ 4°C	(1) 1 L HDPE	Yes

OBSERVATIONS / NOTES:

Flow ~10-20 gpm @ Culvert

MAP:

Refer to Figure 3-2 of the QAPP for CTO 0166

Circle if Applicable:

MS/MSD: —

Duplicate ID No.: FD03290303 & F

Signature(s): Ty Rojahn

Tetra Tech NUS, Inc.

SURFACE WATER SAMPLE LOG SHEET

Project Site Name: NSWC CRANE
Project No.: N9060 CTO 0279

[] Stream
[] Spring
[] Pond
[] Lake
[X] Other: DRAINAGE PIPE
[] QA Sample Type:

Sample ID No.: 13SW11 01 E F
Sample Location: 13SW11
Sampled By: T. Rojahn / R. Bulkner
C.O.C. No.: 0986

Type of Sample:
[X] Low Concentration
[] High Concentration

SAMPLING DATA:

	Color Visual	pH Standard	S.C. mS/cm	Temp. Degrees C	Turbidity NTU	DO mg/l	Salinity %	ORP mV
Date: 5/8/03								
Time: 0935								
Depth: —	RUSTY ORANGE	7.67	2.743	16.45	85	4.35	NA	157.9
Method: GRAB								

SAMPLE COLLECTION INFORMATION:

Analysis	Preservative	Container Requirements	Collected
SVOCs (8270C)	4°C	(2) 1 L Amber	—
SVOCs (SIM)	4°C	(2) 1 L Amber	—
SVOCs (8151A)	4°C	(2) 1 L Amber	—
Explosives (8330)	4°C	(2) 1 L Amber	Yes
Total Metals (6020) & Total Hg (7470A)	HNO3 / 4°C	(1) 1 L HDPE	Yes
Dissolved Metals (6020) & Dis. Hg (7470A)	HNO3/ 4°C	(1) 1 L HDPE	Yes
Ammonia (350.1) & Nitrate (353.2)	H2SO4/ 4°C	(1) 1 L HDPE	Yes

OBSERVATIONS / NOTES:

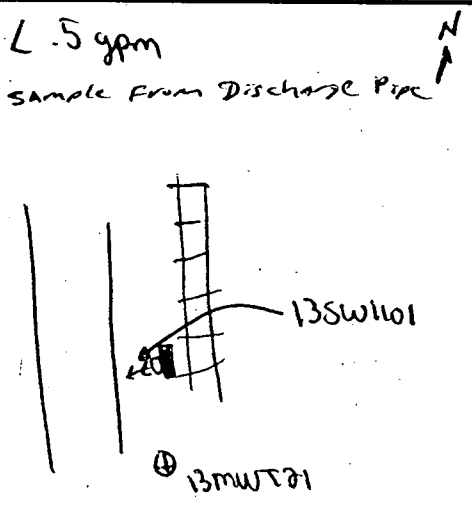

MAP:

Refer to Figure 3-2 of the QAPP for CTO 0166

Circle if Applicable:

MS/MSD	Duplicate ID No.:
—	—

Signature(s): Robert Bulkner

Tetra Tech NUS, Inc.

SURFACE WATER SAMPLE LOG SHEET

Project Site Name: NSWC CRANE
Project No.: N9060 CTO 0279

[X] Stream
[] Spring
[] Pond
[] Lake
[] Other: culvert
[] QA Sample Type:

Sample ID No.: 13SW 12 01 EF
Sample Location: 13SW 12
Sampled By: T. Rojahn
C.O.C. No.: 0980

Type of Sample:
[X] Low Concentration
[] High Concentration

SAMPLING DATA:

	Color Visual	pH Standard	S.C. mS/cm	Temp. Degrees C	Turbidity NTU	DO mg/l	Salinity %	ORP mV
Date: 3/30/03 Time: 0930 Depth: 1-3" Method: Direct from culvert	CLEAR	7.92	0.040	6.85	17	11.98	NA	162

SAMPLE COLLECTION INFORMATION:

Analysis	Preservative	Container Requirements	Collected
SVOCs (8270C)	4°C	(2) 1 L Amber	—
SVOCs (SIM)	4°C	(2) 1 L Amber	—
SVOCs (8151A)	4°C	(2) 1 L Amber	—
Explosives (8330)	4°C	(2) 1 L Amber	Yes
Total Metals (6020) & Total Hg (7470A)	HNO3 / 4°C	(1) 1 L HDPE	Yes
Dissolved Metals (6020) & Dis. Hg (7470A)	HNO3/ 4°C	(1) 1 L HDPE	Yes
Ammonia (350.1) & Nitrate (353.2)	H2SO4/ 4°C	(1) 1 L HDPE	Yes

OBSERVATIONS / NOTES:

Flow 10-20 gpm

MAP:

Refer to Figure 3-2 of the QAPP for CTO 0166

Circle if Applicable:

MS/MSD —

Duplicate ID No.: —

Signature(s):

Tetra Tech NUS, Inc.

SURFACE WATER SAMPLE LOG SHEET

Project Site Name: NSWC CRANE
Project No.: N9060 CTO 0279

[] Stream
[] Spring
[] Pond
[] Lake
[] Other:
[] QA Sample Type:

Sample ID No.: 13SW 13 01 EF
Sample Location: 13SW 13
Sampled By: T. Rojahn
C.O.C. No.: 0980

Type of Sample:
[X] Low Concentration
[] High Concentration

SAMPLING DATA:

	Color Visual	pH Standard	S.C. mS/cm	Temp. Degrees C	Turbidity NTU	DO mg/l	Salinity %	ORP mV
Date: 3/30/03								
Time: 1000								
Depth: 3"								
Method: Direct	CLEAR	8.07	0.260	6.52	12.6	12.32	NA	157

SAMPLE COLLECTION INFORMATION:

Analysis	Preservative	Container Requirements	Collected
SVOCs (8270C)	4°C	(2) 1 L Amber	—
SVOCs (SIM)	4°C	(2) 1 L Amber	—
SVOCs (8151A)	4°C	(2) 1 L Amber	—
Explosives (8330)	4°C	(2) 1 L Amber	Yes
Total Metals (6020) & Total Hg (7470A)	HNO3 / 4°C	(1) 1 L HDPE	Yes
Dissolved Metals (6020) & Dis. Hg (7470A)	HNO3/ 4°C	(1) 1 L HDPE	Yes
Ammonia (350.1) & Nitrate (353.2)	H2SO4/ 4°C	(1) 1 L HDPE	Yes

OBSERVATIONS / NOTES:

20' W. of culvert

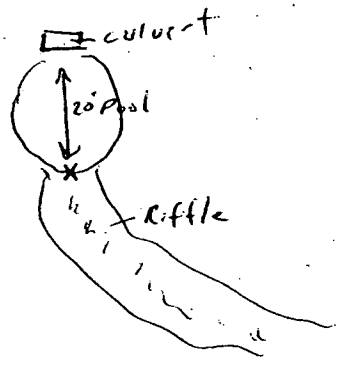

FLOW ~20-50 gpm

MAP:

Refer to Figure 3-2 of the QAPP for CTO 0166

Circle if Applicable:

MS/MSD —

Duplicate ID No.: —

Signature(s): Ty Rojahn

APPENDIX C.2.2
SWMU 13 SURFACE WATER SAMPLE LOG SHEETS
ROUND 2

Tetra Tech NUS, Inc.

SURFACE WATER SAMPLE LOG SHEET

Project Site Name: NSWC CRANE, SWMU13
Project No.: N9060 CTO 0279

[] Stream
[] Spring
[] Pond
[] Lake
[■] Other: SEEP / PONDED WATER
[] QA Sample Type:

Sample ID No.: 13SP0101
Sample Location: 13 SP01
Sampled By: F.W. / TK
C.O.C. No.: 4801 & 4802

Type of Sample:
[X] Low Concentration
[] High Concentration

SAMPLING DATA

	Color (Visual)	pH (S. U.)	S.C. (mS/cm)	Temp. (°C)	Turbidity (NTU)	DO (mg/l)	ORP (mV)	Other NA
Date: 10/22/03								
Time: 0930								
Depth: SURFACE	CLEAR	6.8	0.335	11.81	2.60	3.60	202.6	—
Method: DIRECT								

SAMPLE COLLECTION INFORMATION

Analysis	Preservative	Container Requirements	Collected
Explosives SW-846 8330	4°C	(2) L Glass Amber	Yes
Micellaneous Explosives SW-846 8330	4°C	(2) L Glass Amber	Yes
Total Metals SW846 6020/Mercury 7470A	4°C/HNO_3	(1) L HDPE	Yes
Diss. Metals SW846 6020/Mercury 7470A	4°C/HNO_3	(1) L HDPE	Yes
Nitrate + Nitrite (asN) EPA 353.2 & Ammonia (asN) EPA 350.1	4°C/H_2SO_4	(1) L HDPE	Yes
Selected Ion Monitoring - PAHs	4°C	(2) L Glass Amber	—

OBSERVATIONS / NOTES

Photo #1 (0305)
PONDED No Flow

MAP

Circle if Applicable:

MS/MSD — Duplicate ID No.: —

Signature(s): Tony Hoyt

Tetra Tech NUS, Inc.

SURFACE WATER SAMPLE LOG SHEET

Project Site Name: NSWC CRANE, SWMU13
Project No.: N9060 CTO 0279

[] Stream
[] Spring
[] Pond
[] Lake
[] Other: SEEP / PONDED
[] QA Sample Type:

Sample ID No.: 135P0201
Sample Location: 135P02
Sampled By: MC/TK
C.O.C. No.: 4801 & 4802

Type of Sample:
[X] Low Concentration
[] High Concentration

SAMPLING DATA

	Color (Visual)	pH (S. U.)	S.C. (mS/cm)	Temp. (°C)	Turbidity (NTU)	DO (mg/l)	ORP (mV)	Other NA
Date: 10/22/03								
Time: 1033								
Depth: MID	CLEAR	7.70	0.360	12.16	5.0	9.79	211.0	—
Method: DIRECT								

SAMPLE COLLECTION INFORMATION

Analysis	Preservative	Container Requirements	Collected
Explosives SW-846 8330	4°C	(2) L Glass Amber	Yes
Micellaneous Explosives SW-846 8330	4°C	(2) L Glass Amber	Yes
Total Metals SW846 6020/Mercury 7470A	4°C/HNO_3	(1) L HDPE	Yes
Diss. Metals SW846 6020/Mercury 7470A	4°C/HNO_3	(1) L HDPE	Yes -F
Nitrate + Nitrite (asN) EPA 353.2 & Ammonia (asN) EPA 350.1	4°C/H_2SO_4	(1) L HDPE	Yes
Selected Ion Monitoring - PAHs	4°C	(2) L Glass Amber	

OBSERVATIONS/NOTES

8" DEEP
PHOTO #6 (0308)
PONDED NO FLOW

MAP

Circle if Applicable:

MS/MSD	Duplicate ID No.:
—	—

Signature(s): Terry Rogal

Tetra Tech NUS, Inc.

SURFACE WATER SAMPLE LOG SHEET

Project Site Name: NSWC CRANE, SWMU13
Project No.: N9060 CTO 0279

[] Stream
[] Spring
[] Pond
[] Lake
[■] Other: SEEP / PONDED
[] QA Sample Type:

Sample ID No.: 13SP0301
Sample Location: 13SP03
Sampled By: MC / TL
C.O.C. No.: 4801 & 4802

Type of Sample:
[X] Low Concentration
[] High Concentration

SAMPLING DATA

	Color (Visual)	pH (S. U.)	S.C. (mS/cm)	Temp. (°C)	Turbidity (NTU)	DO (mg/l)	ORP (mV)	Other NA
Date: 10/22/03	TANISH	7.03	0.509	14.54	40	5.28	227.5	—
Time: 1230								
Depth: MID								
Method: DIRECT								

SAMPLE COLLECTION INFORMATION

Analysis	Preservative	Container Requirements	Collected
Explosives SW-846 8330	4°C	(2) L Glass Amber	Yes
Micellaneous Explosives SW-846 8330	4°C	(2) L Glass Amber	Yes
Total Metals SW846 6020/Mercury 7470A	4°C/HNO_3	(1) L HDPE	Yes
Diss. Metals SW846 6020/Mercury 7470A	4°C/HNO_3	(1) L HDPE	Yes
Nitrate + Nitrite (asN) EPA 353.2 & Ammonia (asN) EPA 350.1	4°C/H_2SO_4	(1) L HDPE	Yes
Selected Ion Monitoring - PAHs	4°C	(2) L Glass Amber	—

F

OBSERVATIONS/NOTES

DEPTH ~1'
PHOTO #9 (0310)
PONDED TRENCH NO FLOW

MAP

Circle if Applicable:

MS/MSD —

Duplicate ID No.: —

Signature(s): Tay Azal

Tetra Tech NUS, Inc.

SURFACE WATER SAMPLE LOG SHEET

Project Site Name: NSWC CRANE, SWMU13
Project No.: N9060 CTO 0279

[] Stream
[] Spring
[] Pond
[] Lake
[] Other: SEEP / Ponded water
[] QA Sample Type:

Sample ID No.: 13SP0401
Sample Location: 13SP04
Sampled By: FW
C.O.C. No.: 4801 & 4801

Type of Sample:
[X] Low Concentration
[] High Concentration

SAMPLING DATA

Date: 10/22/03	Color (Visual)	pH (S. U.)	S.C. (mS/cm)	Temp. (°C)	Turbidity (NTU)	DO (mg/l)	ORP (mV)	Other NA
Time: 1330								
Depth: MIP	Clear	6.44	0.307	14.08	0.01	6.02	283.7	—
Method: Direct								

SAMPLE COLLECTION INFORMATION

Analysis	Preservative	Container Requirements	Collected
Explosives SW-846 8330	4°C	(2) L Glass Amber	Yes
Micellaneous Explosives SW-846 8330	4°C	(2) L Glass Amber	Yes
Total Metals SW846 6020/Mercury 7470A	4°C/HNO_3	(1) L HDPE	Yes
Diss. Metals SW846 6020/Mercury 7470A	4°C/HNO_3	(1) L HDPE	Yes
Nitrate + Nitrite (asN) EPA 353.2 & Ammonia (asN) EPA 350.1	4°C/H_2SO_4	(1) L HDPE	Yes
Selected Ion Monitoring - PAHs	4°C	(2) L Glass Amber	—

OBSERVATIONS/NOTES:

Depth ~5"
PHOTO # 12 (0313)
No Flow (PONDED)

MAP:

Circle if Applicable:

MS/MSD

Duplicate ID No.: —

Signature(s): Ty Nagel

Tetra Tech NUS, Inc.

SURFACE WATER SAMPLE LOG SHEET

Project Site Name: NSWC CRANE, SWMU13
Project No.: N9060 CTO 0279

[] Stream
[] Spring
[] Pond
[] Lake
[X] Other: CULVERT
[] QA Sample Type:

Sample ID No.: 135W0702
Sample Location: 135W07
Sampled By: MC
C.O.C. No.: 4814 & 4813

Type of Sample:
[X] Low Concentration
[] High Concentration

SAMPLING DATA

	Color (Visual)	pH (S. U.)	S.C. (mS/cm)	Temp. (°C)	Turbidity (NTU)	DO (mg/l)	ORP (mV)	Other NA
Date: 10-27-03								
Time: 1305								
Depth: 4"								
Method: DIRECT FILL	CLEAR	7.25	0.550	13.27	9.12	5.19	270	—

SAMPLE COLLECTION INFORMATION

Analysis	Preservative	Container Requirements	Collected
Explosives SW-846 8330	4°C	(2) L Glass Amber	Yes
Micellaneous Explosives SW-846 8330	4°C	(2) L Glass Amber	Yes
Total Metals SW846 6020/Mercury 7470A	4°C/HNO_3	(1) L HDPE	Yes
Diss. Metals SW846.6020/Mercury 7470A	4°C/HNO_3	(1) L HDPE	Yes
Nitrate + Nitrite (asN) EPA 353.2 & Ammonia (asN) EPA 350.1	4°C/H_2SO_4	(1) L HDPE	Yes
Selected Ion Monitoring - PAHs	4°C	(2) L Glass Amber	—

OBSERVATIONS / NOTES

PHOTO # 0339

MAP

Circle if Applicable:

MS/MSD —

Duplicate ID No.: —

Signature(s): [illegible]

Tetra Tech NUS, Inc.

SURFACE WATER SAMPLE LOG SHEET

Project Site Name: NSWC CRANE, SWMU13
Project No.: N9060 CTO 0279

Sample ID No.: 135W~~08~~02 (FD)
Sample Location: 135W08
Sampled By: MC/TR
C.O.C. No.: 4804

[X] Stream (Formerly)
[] Spring
[] Pond
[] Lake
[X] Other: Former Stream Now Flows
[] QA Sample Type: throug culvert

Type of Sample:
[X] Low Concentration
[] High Concentration

SAMPLING DATA

	Color (Visual)	pH (S. U.)	S.C. (mS/cm)	Temp. (°C)	Turbidity (NTU)	DO (mg/l)	ORP (mV)	Other NA
Date: 10/23/03								
Time: 1230								
Depth: MID								
Method: Peristaltic Pump	Clear	7.09	0.460	14.71	19.3	6.03	-23.7	—

SAMPLE COLLECTION INFORMATION

Analysis	Preservative	Container Requirements	Collected
Explosives SW-846 8330	4°C	(2) L Glass Amber	Yes
Micellaneous Explosives SW-846 8330	4°C	(2) L Glass Amber	Yes
Total Metals SW846 6020/Mercury 7470A	4°C/HNO_3	(1) L HDPE	Yes
Diss. Metals SW846 6020/Mercury 7470A	4°C/HNO_3	(1) L HDPE	Yes
Nitrate + Nitrite (asN) EPA 353.2 & Ammonia (asN) EPA 350.1	4°C/H_2SO_4	(1) L HDPE	Yes
Selected Ion Monitoring - PAHs	4°C	(2) L Glass Amber	—

OBSERVATIONS / NOTES

Depth ~4'
PHOTO (0322)

MAP

Circle if Applicable:

MS/MSD	Duplicate ID No.:
—	—

Signature(s): Ty Rogers

Tetra Tech NUS, Inc.

SURFACE WATER SAMPLE LOG SHEET

Project Site Name: NSWC CRANE, SWMU13
Project No.: N9060 CTO 0279

[] Stream
[] Spring
[] Pond
[] Lake
[X] Other: CULVERT
[] QA Sample Type:

Sample ID No.: 13SW0902
Sample Location: 13SW09
Sampled By: MC
C.O.C. No.: 4814 & 4813

Type of Sample:
[X] Low Concentration
[] High Concentration

SAMPLING DATA

	Color (Visual)	pH (S. U.)	S.C. (mS/cm)	Temp. (°C)	Turbidity (NTU)	DO (mg/l)	ORP (mV)	Other NA
Date: 10-27-03								
Time: 1015								
Depth: 6"								
Method: DIRECT FILL	CLEAR	7.80	0.436	11.80	5.13	8.55	324.4	-

SAMPLE COLLECTION INFORMATION

Analysis	Preservative	Container Requirements	Collected
Explosives SW-846 8330	4°C	(2) L Glass Amber	Yes
Micellaneous Explosives SW-846 8330	4°C	(2) L Glass Amber	Yes
Total Metals SW846 6020/Mercury 7470A	4°C/HNO_3	(1) L HDPE	Yes
Diss. Metals SW846 6020/Mercury 7470A	4°C/HNO_3	(1) L HDPE	Yes
Nitrate + Nitrite (asN) EPA 353.2 & Ammonia (asN) EPA 350.1	4°C/H_2SO_4	(1) L HDPE	Yes
Selected Ion Monitoring - PAHs	4°C	(2) L Glass Amber	—

OBSERVATIONS / NOTES

PHOTO #0344

MAP

Circle if Applicable:

MS/MSD —

Duplicate ID No.: —

Signature(s): [illegible]

Tetra Tech NUS, Inc.

SURFACE WATER SAMPLE LOG SHEET

Project Site Name: NSWC CRANE, SWMU13
Project No.: N9060 CTO 0279

[X] Stream
[] Spring
[] Pond
[] Lake
[] Other: PONDED
[] QA Sample Type:

Sample ID No.: 135W1002
Sample Location: 135W10
Sampled By: MC/TK
C.O.C. No.: 4804

Type of Sample:
[X] Low Concentration
[] High Concentration

SAMPLING DATA

	Color (Visual)	pH (S. U.)	S.C. (mS/cm)	Temp. (°C)	Turbidity (NTU)	DO (mg/l)	ORP (mV)	Other NA
Date: 10/23/03								
Time: 0850								
Depth: M10								
Method:	CLEAR	6.17	0.270	12.77	1.98	3.65	178.7	—

SAMPLE COLLECTION INFORMATION

Analysis	Preservative	Container Requirements	Collected
Explosives SW-846 8330	4°C	(2) L Glass Amber	Yes
Micellaneous Explosives SW-846 8330	4°C	(2) L Glass Amber	Yes
Total Metals SW846 6020/Mercury 7470A	4°C/HNO_3	(1) L HDPE	Yes
Diss. Metals SW846 6020/Mercury 7470A	4°C/HNO_3	(1) L HDPE	Yes -F
Nitrate + Nitrite (asN) EPA 353.2 & Ammonia (asN) EPA 350.1	4°C/H_2SO_4	(1) L HDPE	Yes
Selected Ion Monitoring - PAHs	4°C	(2) L Glass Amber	—

OBSERVATIONS/NOTES

PONDED No Flow
Depth 8"

MAP

Circle if Applicable:

MS/MSD —
Duplicate ID No.: —

Signature(s):

Tetra Tech NUS, Inc.

SURFACE WATER SAMPLE LOG SHEET

Project Site Name: NSWC CRANE, SWMU13
Project No.: N9060 CTO 0279

[✓] Stream
[] Spring
[] Pond
[] Lake
[] Other:
[] QA Sample Type:

Sample ID No.: 13SW1102
Sample Location: SWMU 13
Sampled By: M. COCHRAN
C.O.C. No.: 4821

Type of Sample:
[X] Low Concentration
[] High Concentration

SAMPLING DATA

	Color (Visual)	pH (S. U.)	S.C. (mS/cm)	Temp. (°C)	Turbidity (NTU)	DO (mg/l)	ORP (mV)	Other NA
Date: 11-18-03								
Time: 1400								
Depth: 6"								
Method: DIRECT FILL	BR	6.90	1.024	15.20	242	4.99	216	

SAMPLE COLLECTION INFORMATION

Analysis	Preservative	Container Requirements	Collected
Explosives SW-846 8330	4°C	(2) L Glass Amber	Yes ✓
Micellaneous Explosives SW-846 8330	4°C	(2) L Glass Amber	Yes ✓
Total Metals SW846 6020/Mercury 7470A	4°C/HNO_3	(1) L HDPE	Yes ✓
Diss. Metals SW846 6020/Mercury 7470A	4°C/HNO_3	(1) L HDPE	Yes ✓
Nitrate + Nitrite (asN) EPA 353.2 & Ammonia (asN) EPA 350.1	4°C/H_2SO_4	(1) L HDPE	Yes ✓
Selected Ion Monitoring - PAHs	4°C	(2) L Glass Amber	NO

OBSERVATIONS / NOTES:

FLOW @ 15 GPM

MAP:

Circle if Applicable:

MS/MSD —

Duplicate ID No.: —

Signature(s): [signature] FOR M. COCHRAN

Tetra Tech NUS, Inc.

SURFACE WATER SAMPLE LOG SHEET

Project Site Name: NSWC CRANE, SWMU13
Project No.: N9060 CTO 0279

Sample ID No.: 13SW1202
Sample Location: 13SW12
Sampled By: MC/TK
C.O.C. No.: 4801 & 4802

[I] Stream Ponded H2O No Flow
[] Spring
[] Pond
[] Lake
[] Other:
[] QA Sample Type:

Type of Sample:
[X] Low Concentration
[] High Concentration

SAMPLING DATA

	Color (Visual)	pH (S. U.)	S.C. (mS/cm)	Temp. (°C)	Turbidity (NTU)	DO (mg/l)	ORP (mV)	Other NA
Date: 10/22/03								
Time: 1450								
Depth: MID								
Method: Direct	CLEAR	7.51	0.427	12.25	6.0	9.50	233.6	—

SAMPLE COLLECTION INFORMATION

Analysis	Preservative	Container Requirements	Collected
Explosives SW-846 8330	4°C	(2) L Glass Amber	Yes
Micellaneous Explosives SW-846 8330	4°C	(2) L Glass Amber	Yes
Total Metals SW846 6020/Mercury 7470A	4°C/HNO_3	(1) L HDPE	Yes
Diss. Metals SW846 6020/Mercury 7470A	4°C/HNO_3	(1) L HDPE	Yes
Nitrate + Nitrite (asN) EPA 353.2 & Ammonia (asN) EPA 350.1	4°C/H_2SO_4	(1) L HDPE	Yes
Selected Ion Monitoring - PAHs	4°C	(2) L Glass Amber	

OBSERVATIONS/NOTES:

Depth ~1'
115' FROM ORIGINAL location
Downstream
PHOTO #14 (0315)

MAP

Circle if Applicable:

MS/MSD

Duplicate ID No.:

Signature(s): Tony Rigil

Tetra Tech NUS, Inc.

SURFACE WATER SAMPLE LOG SHEET

Project Site Name: NSWC CRANE, SWMU13
Project No.: N9060 CTO 0279

[X] Stream
[] Spring
[] Pond
[] Lake
[] Other:
[] QA Sample Type:

Sample ID No.: 13SW1302
Sample Location: 13SW13
Sampled By: MC / TK
C.O.C. No.: 4801 & 4802

Type of Sample:
[X] Low Concentration
[] High Concentration

SAMPLING DATA

	Color (Visual)	pH (S. U.)	S.C. (mS/cm)	Temp. (°C)	Turbidity (NTU)	DO (mg/l)	ORP (mV)	Other NA
Date: 10/22/03								
Time: 1400								
Depth: MID								
Method: Direct	CLEAR	7.42	0.531	13.33	3.0	2.19	255.6	–

SAMPLE COLLECTION INFORMATION

Analysis	Preservative	Container Requirements	Collected
Explosives SW-846 8330	4°C	(2) L Glass Amber	Yes
Micellaneous Explosives SW-846 8330	4°C	(2) L Glass Amber	Yes
Total Metals SW846 6020/Mercury 7470A	4°C/HNO_3	(1) L HDPE	Yes
Diss. Metals SW846 6020/Mercury 7470A	4°C/HNO_3	(1) L HDPE	Yes
Nitrate + Nitrite (asN) EPA 353.2 & Ammonia (asN) EPA 350.1	4°C/H_2SO_4	(1) L HDPE	Yes
Selected Ion Monitoring - PAHs	4°C	(2) L Glass Amber	—

-F

OBSERVATIONS / NOTES

FLOW <1 gal/MIN
Sample at EDGE OF pool

MAP

Circle if Applicable:
MS/MSD YES
Duplicate ID No.: 13FD10220303

Signature(s):

Tetra Tech NUS, Inc.

SURFACE WATER SAMPLE LOG SHEET

Project Site Name: NSWC CRANE, SWMU13
Project No.: N9060 CTO 0279

[X] Stream
[] Spring
[] Pond
[] Lake
[X] Other: PONDED
[] QA Sample Type:

Sample ID No.: 13SW1401
Sample Location: 13SW14
Sampled By: MC / TK
C.O.C. No.: 4801 & 4802

Type of Sample:
[X] Low Concentration
[] High Concentration

SAMPLING DATA

	Color (Visual)	pH (S. U.)	S.C. (mS/cm)	Temp. (°C)	Turbidity (NTU)	DO (mg/l)	ORP (mV)	Other NA
Date: 10/22/03								
Time: 1045								
Depth: MID	CLEAR	7.33	0.365	12.14	4.4	5.93	224.7	—
Method: DIRECT								

SAMPLE COLLECTION INFORMATION

Analysis	Preservative	Container Requirements	Collected
Explosives SW-846 8330	4°C	(2) L Glass Amber	Yes
Micellaneous Explosives SW-846 8330	4°C	(2) L Glass Amber	Yes
Total Metals SW846 6020/Mercury 7470A	4°C/HNO_3	(1) L HDPE	Yes
Diss. Metals SW846 6020/Mercury 7470A	4°C/HNO_3	(1) L HDPE	Yes -F
Nitrate + Nitrite (asN) EPA 353.2 & Ammonia (asN) EPA 350.1	4°C/H_2SO_4	(1) L HDPE	Yes
Selected Ion Monitoring - PAHs	4°C	(2) L Glass Amber	—

OBSERVATIONS / NOTES:

Depth 12"
PHOTO # 8 (0309)
PONDED No Flow

MAP:

Circle if Applicable:

MS/MSD	Duplicate ID No.:
—	13FD10220301

Signature(s):

Tetra Tech NUS, Inc.

SURFACE WATER SAMPLE LOG SHEET

Project Site Name: NSWC CRANE, SWMU13
Project No.: N9060 CTO 0279

Sample ID No.: 16SW15O1
Sample Location: 16SW15015
Sampled By: MC
C.O.C. No.: 4814 & 4813

[X] Stream
[] Spring
[] Pond
[] Lake
[] Other:
[] QA Sample Type:

Type of Sample:
[X] Low Concentration
[] High Concentration

SAMPLING DATA

	Color (Visual)	pH (S. U.)	S.C. (mS/cm)	Temp. (°C)	Turbidity (NTU)	DO (mg/l)	ORP (mV)	Other NA
Date: 10-27-03								
Time: 0900								
Depth: 2"								
Method: DIRECT FILL	CLEAR	7.43	0.251	8.93	10.4	10.59	290.5	-

SAMPLE COLLECTION INFORMATION

Analysis	Preservative	Container Requirements	Collected
Explosives SW-846 8330	4°C	(2) L Glass Amber	Yes
Micellaneous Explosives SW-846 8330	4°C	(2) L Glass Amber	Yes
Total Metals SW846 6020/Mercury 7470A	4°C/HNO_3	(1) L HDPE	Yes
Diss. Metals SW846 6020/Mercury 7470A	4°C/HNO_3	(1) L HDPE	Yes -F
Nitrate + Nitrite (asN) EPA 353.2 & Ammonia (asN) EPA 350.1	4°C/H_2SO_4	(1) L HDPE	Yes
Selected Ion Monitoring - PAHs	4°C	(2) L Glass Amber	—

OBSERVATIONS/NOTES:

PONDED WATER

PHOTO # 0342

MAP:

Circle if Applicable:

MS/MSD —

Duplicate ID No.: —

Signature(s):

Tetra Tech NUS, Inc.

SURFACE WATER SAMPLE LOG SHEET

Project Site Name: NSWC CRANE, SWMU13
Project No.: N9060 CTO 0279

[] Stream
[] Spring
[] Pond
[] Lake
[] Other: Ponded H2O
[] QA Sample Type:

Sample ID No.: 135W1601
Sample Location: 135W1601
Sampled By: MC / TK
C.O.C. No.: 4801 & 4802

Type of Sample:
[X] Low Concentration
[] High Concentration

SAMPLING DATA

	Color (Visual)	pH (S. U.)	S.C. (mS/cm)	Temp. (°C)	Turbidity (NTU)	DO (mg/l)	ORP (mV)	Other NA
Date: 10-22-03								
Time: 0950								
Depth: MID								
Method: Direct	Sl. Cloudy	7.17	0.254	12.18	6.5	8.48	213.7	—

SAMPLE COLLECTION INFORMATION

Analysis	Preservative	Container Requirements	Collected
Explosives SW-846 8330	4°C	(2) L Glass Amber	Yes
Micellaneous Explosives SW-846 8330	4°C	(2) L Glass Amber	Yes
Total Metals SW846 6020/Mercury 7470A	4°C/HNO_3	(1) L HDPE	Yes
Diss. Metals SW846 6020/Mercury 7470A	4°C/HNO_3	(1) L HDPE	Yes -F
Nitrate + Nitrite (asN) EPA 353.2 & Ammonia (asN) EPA 350.1	4°C/H_2SO_4	(1) L HDPE	Yes
Selected Ion Monitoring - PAHs	4°C	(2) L Glass Amber	

OBSERVATIONS / NOTES

4-6" DEEP
PHOTO #2 (0304)
PONDED NO FLOW

MAP

Circle if Applicable:

MS/MSD	Duplicate ID No.:
—	—

Signature(s): [signature]

Tetra Tech NUS, Inc.

SURFACE WATER SAMPLE LOG SHEET

Project Site Name: NSWC CRANE, SWMU13
Project No.: N9060 CTO 0279

Sample ID No.: 135W1801
Sample Location: 135W18
Sampled By: MC
C.O.C. No.: 4804

[X] Stream
[] Spring
[] Pond
[] Lake
[] Other: PONDED AREA No Flow
[] QA Sample Type:

Type of Sample:
[X] Low Concentration
[] High Concentration

SAMPLING DATA

	Color (Visual)	pH (S. U.)	S.C. (mS/cm)	Temp. (°C)	Turbidity (NTU)	DO (mg/l)	ORP (mV)	Other NA
Date: 10/23/03 Time: ~~1555~~ 0915 Depth: M10 Method: Direct	CLEAR	7.12	0.347	12.11	1.03	7.19	175.6	—

SAMPLE COLLECTION INFORMATION

Analysis	Preservative	Container Requirements	Collected
Explosives SW-846 8330	4°C	(2) L Glass Amber	Yes
Micellaneous Explosives SW-846 8330	4°C	(2) L Glass Amber	Yes
Total Metals SW846 6020/Mercury 7470A	4°C/HNO_3	(1) L HDPE	Yes
Diss. Metals SW846 6020/Mercury 7470A	4°C/HNO_3	(1) L HDPE	Yes
Nitrate + Nitrite (asN) EPA 353.2 & Ammonia (asN) EPA 350.1	4°C/H_2SO_4	(1) L HDPE	Yes
Selected Ion Monitoring - PAHs	4°C	(2) L Glass Amber	—

-F

OBSERVATIONS/NOTES:

Depth of ~~Stream~~ (TN) PONDED AREA ~1'

MAP:

Circle if Applicable:

MS/MSD —

Duplicate ID No.:

Signature(s):

Tetra Tech NUS, Inc.

SURFACE WATER SAMPLE LOG SHEET

Project Site Name: NSWC CRANE, SWMU13
Project No.: N9060 CTO 0279

Sample ID No.: 135W1901
Sample Location: 135W19
Sampled By: MC/FWI
C.O.C. No.: 4804

[X] Stream
[] Spring
[] Pond
[] Lake
[X] Other: PONDED No Flow
[] QA Sample Type:

Type of Sample:
[X] Low Concentration
[] High Concentration

SAMPLING DATA

	Color (Visual)	pH (S. U.)	S.C. (mS/cm)	Temp. (°C)	Turbidity (NTU)	DO (mg/l)	ORP (mV)	Other NA
Date: 10/23/03								
Time: 0935								
Depth: MID								
Method: DIRECT	CLEAR	7.25	0.566	11.69	1.93	6.03	203.5	—

SAMPLE COLLECTION INFORMATION

Analysis	Preservative	Container Requirements	Collected
Explosives SW-846 8330	4°C	(2) L Glass Amber	Yes
Micellaneous Explosives SW-846 8330	4°C	(2) L Glass Amber	Yes
Total Metals SW846 6020/Mercury 7470A	4°C/HNO_3	(1) L HDPE	Yes
Diss. Metals SW846 6020/Mercury 7470A	4°C/HNO_3	(1) L HDPE	Yes -F
Nitrate + Nitrite (asN) EPA 353.2 & Ammonia (asN) EPA 350.1	4°C/H_2SO_4	(1) L HDPE	Yes
Selected Ion Monitoring - PAHs	4°C	(2) L Glass Amber	—

OBSERVATIONS/NOTES:

Depth of ponded area 1'

PHOTO (#0320)

MAP

Circle if Applicable:

MS/MSD —

Duplicate ID No.: —

Signature(s):

Tetra Tech NUS, Inc.

SURFACE WATER SAMPLE LOG SHEET

Project Site Name: NSWC CRANE, SWMU13
Project No.: N9060 CTO 0279

[X] Stream
[] Spring
[] Pond
[] Lake
[X] Other: Ponded
[] QA Sample Type:

Sample ID No.: 13SW2001
Sample Location: 13SW20
Sampled By: EW/TK
C.O.C. No.: 4804

Type of Sample:
[X] Low Concentration
[] High Concentration

SAMPLING DATA

	Color (Visual)	pH (S. U.)	S.C. (mS/cm)	Temp. (°C)	Turbidity (NTU)	DO (mg/l)	ORP (mV)	Other NA
Date: 10/23/03 Time: 1315 Depth: MIN Method: Direct		7.75	0.300	13.22	6.25	4.39	158.3	—

SAMPLE COLLECTION INFORMATION

Analysis	Preservative	Container Requirements	Collected
Explosives SW-846 8330	4°C	(2) L Glass Amber	Yes
Micellaneous Explosives SW-846 8330	4°C	(2) L Glass Amber	Yes
Total Metals SW846 6020/Mercury 7470A	4°C/HNO_3	(1) L HDPE	Yes
Diss. Metals SW846 6020/Mercury 7470A	4°C/HNO_3	(1) L HDPE	Yes -F
Nitrate + Nitrite (asN) EPA 353.2 & Ammonia (asN) EPA 350.1	4°C/H_2SO_4	(1) L HDPE	Yes
Selected Ion Monitoring - PAHs	4°C	(2) L Glass Amber	—

OBSERVATIONS/NOTES

Depth 4"
Ponded
PHOTO (#0323)

45' Below original SD location.

MAP

Circle if Applicable:

MS/MSD ✓

Duplicate ID No.: —

Signature(s): Ty Nagel

Tetra Tech NUS, Inc.

SURFACE WATER SAMPLE LOG SHEET

Project Site Name: NSWC CRANE, SWMU13
Project No.: N9060 CTO 0279

Sample ID No.: 135W2201
Sample Location: 135W22
Sampled By: MC/TK
C.O.C. No.: 4801 & 4802

[X] Stream Ponded No Flow
[] Spring
[] Pond
[] Lake
[] Other:
[] QA Sample Type:

Type of Sample:
[X] Low Concentration
[] High Concentration

SAMPLING DATA

Date: 10/22/03 Time: 1345 Depth: MID Method: DIRECT	Color (Visual)	pH (S. U.)	S.C. (mS/cm)	Temp. (°C)	Turbidity (NTU)	DO (mg/l)	ORP (mV)	Other NA
	CLEAR	7.02	0.434	13.65	1.5	3.71	264.7	—

SAMPLE COLLECTION INFORMATION

Analysis	Preservative	Container Requirements	Collected
Explosives SW-846 8330	4°C	(2) L Glass Amber	Yes
Micellaneous Explosives SW-846 8330	4°C	(2) L Glass Amber	Yes
Total Metals SW846 6020/Mercury 7470A	4°C/HNO_3	(1) L HDPE	Yes
Diss. Metals SW846 6020/Mercury 7470A	4°C/HNO_3	(1) L HDPE	Yes
Nitrate + Nitrite (asN) EPA 353.2 & Ammonia (asN) EPA 350.1	4°C/H_2SO_4	(1) L HDPE	Yes
Selected Ion Monitoring - PAHs	4°C	(2) L Glass Amber	—

OBSERVATIONS/NOTES

60' FROM ORIGINAL location
DOWN stream

PHOTO # 13 (0314)

DEPTH 4"

MAP

Circle if Applicable:

MS/MSD —

Duplicate ID No.: —

Signature(s): Ty Hogel

Tetra Tech NUS, Inc.

SURFACE WATER SAMPLE LOG SHEET

Project Site Name: NSWC CRANE, SWMU13
Project No.: N9060 CTO 0279

[X] Stream
[] Spring
[] Pond
[] Lake
[] Other:
[] QA Sample Type:

Sample ID No.: 13SW2401
Sample Location: 13SW15D24
Sampled By: MC
C.O.C. No.: 4814 & 4813

Type of Sample:
[X] Low Concentration
[] High Concentration

SAMPLING DATA

	Color (Visual)	pH (S. U.)	S.C. (mS/cm)	Temp. (°C)	Turbidity (NTU)	DO (mg/l)	ORP (mV)	Other NA
Date: 10-27-03								
Time: 1330								
Depth: 4"								
Method: DIRECT FILL	CLEAR	7.65	0.207	10.52	22.7	8.29	261.7	—

SAMPLE COLLECTION INFORMATION

Analysis	Preservative	Container Requirements	Collected
Explosives SW-846 8330	4°C	(2) L Glass Amber	Yes
Micellaneous Explosives SW-846 8330	4°C	(2) L Glass Amber	Yes
Total Metals SW846 6020/Mercury 7470A	4°C/HNO_3	(1) L HDPE	Yes
Diss. Metals SW846 6020/Mercury 7470A	4°C/HNO_3	(1) L HDPE	Yes -F
Nitrate + Nitrite (asN) EPA 353.2 & Ammonia (asN) EPA 350.1	4°C/H_2SO_4	(1) L HDPE	Yes
Selected Ion Monitoring - PAHs	4°C	(2) L Glass Amber	—

OBSERVATIONS / NOTES:

PONDED WATER

PHOTO # 0340

MAP:

Circle if Applicable:

MS/MSD —

Duplicate ID No.:

Signature(s):

Tetra Tech NUS, Inc.

SURFACE WATER SAMPLE LOG SHEET

Project Site Name: NSWC CRANE, SWMU13
Project No.: N9060 CTO 0279

Sample ID No.: 13SW2501
Sample Location: 13SW/SD01
Sampled By: FW
C.O.C. No.: 48/4 & 4813

[X] Stream
[] Spring
[] Pond
[] Lake
[] Other:
[] QA Sample Type:

Type of Sample:
[X] Low Concentration
[] High Concentration

SAMPLING DATA

	Color (Visual)	pH (S. U.)	S.C. (mS/cm)	Temp. (°C)	Turbidity (NTU)	DO (mg/l)	ORP (mV)	Other NA
Date: 10-27-03								
Time: 1110								
Depth: 6"	CLEAR	7.63	0.262	10.95	0.0	8.64	288.0	—
Method: DIRECT FILL								

SAMPLE COLLECTION INFORMATION

Analysis	Preservative	Container Requirements	Collected
Explosives SW-846 8330	4°C	(2) L Glass Amber	Yes
Micellaneous Explosives SW-846 8330	4°C	(2) L Glass Amber	Yes
Total Metals SW846 6020/Mercury 7470A	4°C/HNO_3	(1) L HDPE	Yes
Diss. Metals SW846 6020/Mercury 7470A	4°C/HNO_3	(1) L HDPE	Yes -F
Nitrate + Nitrite (asN) EPA 353.2 & Ammonia (asN) EPA 350.1	4°C/H_2SO_4	(1) L HDPE	Yes
Selected Ion Monitoring - PAHs	4°C	(2) L Glass Amber	✓

OBSERVATIONS / NOTES:

FLOWING ~ 20GPM
PHOTO # ~~0344~~ 0345

MAP:

Circle if Applicable:

MS/MSD

Duplicate ID No.: 13FD10270301

Signature(s):

Tetra Tech NUS, Inc.

SURFACE WATER SAMPLE LOG SHEET

Project Site Name: NSWC CRANE, SWMU13
Project No.: N9060 CTO 0279

Sample ID No.: 135W2601
Sample Location: 135W26
Sampled By: MC
C.O.C. No.: 4814 & 4813

[X] Stream
[] Spring
[] Pond
[] Lake
[] Other:
[] QA Sample Type:

Type of Sample:
[X] Low Concentration
[] High Concentration

SAMPLING DATA

	Color (Visual)	pH (S. U.)	S.C. (mS/cm)	Temp. (°C)	Turbidity (NTU)	DO (mg/l)	ORP (mV)	Other NA
Date: 10-27-03								
Time: 1410								
Depth: 6"								
Method: DIRECT FILL	CLEAR	6.87	0.260	12.25	8.04	6.70	341.3	—

SAMPLE COLLECTION INFORMATION

Analysis	Preservative	Container Requirements	Collected
Explosives SW-846 8330	4°C	(2) L Glass Amber	Yes
Micellaneous Explosives SW-846 8330	4°C	(2) L Glass Amber	Yes
Total Metals SW846 6020/Mercury 7470A	4°C/HNO_3	(1) L HDPE	Yes
Diss. Metals SW846 6020/Mercury 7470A	4°C/HNO_3	(1) L HDPE	Yes -F
Nitrate + Nitrite (asN) EPA 353.2 & Ammonia (asN) EPA 350.1	4°C/H_2SO_4	(1) L HDPE	Yes
Selected Ion Monitoring - PAHs	4°C	(2) L Glass Amber	—

OBSERVATIONS/NOTES

PONDED WATER
SURFACE WATER COLLECTED
100' UPSTREAM

PHOTO # 0341

MAP

Circle if Applicable:

MS/MSD	Duplicate ID No.:
—	—

Signature(s):

Tetra Tech NUS, Inc.

SURFACE WATER SAMPLE LOG SHEET

Project Site Name: NSWC CRANE, SWMU13
Project No.: N9060 CTO 0279

Sample ID No.: 13SW2701
Sample Location: 13SW27
Sampled By: MC/TR
C.O.C. No.: 4804

[X] Stream ~10-15 gal
[] Spring
[] Pond
[] Lake
[] Other:
[] QA Sample Type:

Type of Sample:
[X] Low Concentration
[] High Concentration

SAMPLING DATA

	Color (Visual)	pH (S. U.)	S.C. (mS/cm)	Temp. (°C)	Turbidity (NTU)	DO (mg/l)	ORP (mV)	Other NA
Date: 10-23-03 Time: 1415 Depth: M10 Method: Direct	Clear	7.58	0.264	13.43	4.0	8.20	257.1	—

SAMPLE COLLECTION INFORMATION

Analysis	Preservative	Container Requirements	Collected
Explosives SW-846 8330	4°C	(2) L Glass Amber	Yes
Micellaneous Explosives SW-846 8330	4°C	(2) L Glass Amber	Yes
Total Metals SW846 6020/Mercury 7470A	4°C/HNO_3	(1) L HDPE	Yes
Diss. Metals SW846 6020/Mercury 7470A	4°C/HNO_3	(1) L HDPE	Yes -F
Nitrate + Nitrite (asN) EPA 353.2 & Ammonia (asN) EPA 350.1	4°C/H_2SO_4	(1) L HDPE	Yes
Selected Ion Monitoring - PAHs	4°C	(2) L Glass Amber	—

OBSERVATIONS/NOTES

Flow ~10-15 gal
PHOTO # (0325)
Depth 6"

MAP

Circle if Applicable:

MS/MSD — Duplicate ID No.: —

Signature(s): Ty Lopal

Tetra Tech NUS, Inc.

SURFACE WATER SAMPLE LOG SHEET

Project Site Name: NSWC CRANE, SWMU13
Project No.: N9060 CTO 0279

Sample ID No.: BSW2801
Sample Location: BSW/SD 28
Sampled By: MC
C.O.C. No.: 4814 & 4813

[X] Stream
[] Spring
[] Pond
[] Lake
[] Other:
[] QA Sample Type:

Type of Sample:
[X] Low Concentration
[] High Concentration

SAMPLING DATA

	Color (Visual)	pH (S. U.)	S.C. (mS/cm)	Temp. (°C)	Turbidity (NTU)	DO (mg/l)	ORP (mV)	Other NA
Date: 10-27-03	CLEAR	6.37	0.073	8.84	22.1	7.97	330.8	—
Time: 0940								
Depth: 4"								
Method: DIRECT FILL								

SAMPLE COLLECTION INFORMATION

Analysis	Preservative	Container Requirements	Collected
Explosives SW-846 8330	4°C	(2) L Glass Amber	Yes
Micellaneous Explosives SW-846 8330	4°C	(2) L Glass Amber	Yes
Total Metals SW846 6020/Mercury 7470A	4°C/HNO_3	(1) L HDPE	Yes
Diss. Metals SW846 6020/Mercury 7470A	4°C/HNO_3	(1) L HDPE	Yes
Nitrate + Nitrite (asN) EPA 353.2 & Ammonia (asN) EPA 350.1	4°C/H_2SO_4	(1) L HDPE	Yes
Selected Ion Monitoring - PAHs	4°C	(2) L Glass Amber	—

OBSERVATIONS/NOTES

PONDED WATER
PHOTO # 0343

MAP

Circle if Applicable:

MS/MSD	Duplicate ID No.:
—	—

Signature(s):

Tetra Tech NUS, Inc.

SURFACE WATER SAMPLE LOG SHEET

Project Site Name: NSWC CRANE, SWMU13
Project No.: N9060 CTO 0279

Sample ID No.: 13SW3001
Sample Location: 13SW30
Sampled By: MC
C.O.C. No.: 4801 & 4802

[X] Stream
[] Spring
[] Pond
[] Lake
[] Other:
[] QA Sample Type:

Type of Sample:
[X] Low Concentration
[] High Concentration

SAMPLING DATA

	Color (Visual)	pH (S. U.)	S.C. (mS/cm)	Temp. (°C)	Turbidity (NTU)	DO (mg/l)	ORP (mV)	Other NA
Date: 10/22/03								
Time: 1538								
Depth: MID								
Method: Direct	Clear	7.84	0.395	13.09	2.6	9.63	222.1	—

SAMPLE COLLECTION INFORMATION

Analysis	Preservative	Container Requirements	Collected
Explosives SW-846 8330	4°C	(2) L Glass Amber	Yes
Micellaneous Explosives SW-846 8330	4°C	(2) L Glass Amber	Yes
Total Metals SW846 6020/Mercury 7470A	4°C/HNO_3	(1) L HDPE	Yes
Diss. Metals SW846 6020/Mercury 7470A	4°C/HNO_3	(1) L HDPE	Yes
Nitrate + Nitrite (asN) EPA 353.2 & Ammonia (asN) EPA 350.1	4°C/H_2SO_4	(1) L HDPE	Yes
Selected Ion Monitoring - PAHs	4°C	(2) L Glass Amber	

OBSERVATIONS/NOTES:

6" Depth
PHOTO # (0319 @ 1615)

Flow
1' in 4 sec
2" Deep
1' long

MAP:

Circle if Applicable:

MS/MSD —

Duplicate ID No.: —

Signature(s):

Tetra Tech NUS, Inc.

SURFACE WATER SAMPLE LOG SHEET

Project Site Name: NSWC CRANE, SWMU13
Project No.: N9060 CTO 0279

Sample ID No.: 135W3101
Sample Location: 135W31
Sampled By: MC
C.O.C. No.: 4801 & 4802

- [x] Stream
- [ ] Spring
- [ ] Pond
- [ ] Lake
- [ ] Other:
- [ ] QA Sample Type:

Type of Sample:
- [X] Low Concentration
- [ ] High Concentration

SAMPLING DATA

	Color (Visual)	pH (S. U.)	S.C. (mS/cm)	Temp. (°C)	Turbidity (NTU)	DO (mg/l)	ORP (mV)	Other NA
Date: 10/22/03								
Time: 1300								
Depth: MID	Clear	7.88	0.448	14.25	1.1	9.40	226.2	—
Method: Direct								

SAMPLE COLLECTION INFORMATION

Analysis	Preservative	Container Requirements	Collected
Explosives SW-846 8330	4°C	(2) L Glass Amber	Yes
Micellaneous Explosives SW-846 8330	4°C	(2) L Glass Amber	Yes
Total Metals SW846 6020/Mercury 7470A	4°C/HNO_3	(1) L HDPE	Yes
Diss. Metals SW846 6020/Mercury 7470A	4°C/HNO_3	(1) L HDPE	Yes
Nitrate + Nitrite (asN) EPA 353.2 & Ammonia (asN) EPA 350.1	4°C/H_2SO_4	(1) L HDPE	Yes
Selected Ion Monitoring - PAHs	4°C	(2) L Glass Amber	

OBSERVATIONS / NOTES

Depth 8"
PHOTO # 11 (0312)

1' IN 5 SEC
~2' WIDE
1½" DEEP

MAP

Circle if Applicable:

MS/MSD	Duplicate ID No.:
—	—

Signature(s): Ty Rogal

Tetra Tech NUS, Inc.

SURFACE WATER SAMPLE LOG SHEET

Project Site Name: NSWC CRANE, SWMU13
Project No.: N9060 CTO 0279

Sample ID No.: 135W3201
Sample Location: 135W32
Sampled By: MC
C.O.C. No.: 4806

[X] Stream
[] Spring
[] Pond
[] Lake
[] Other:
[] QA Sample Type:

Type of Sample:
[X] Low Concentration
[] High Concentration

SAMPLING DATA

	Color (Visual)	pH (S. U.)	S.C. (mS/cm)	Temp. (°C)	Turbidity (NTU)	DO (mg/l)	ORP (mV)	Other NA
Date: 10-24-03 Time: 0840 Depth: 4" Method: DIRECT FILL	CLEAR	6.99	0.578	10.33	44	9.15	201.5	—

SAMPLE COLLECTION INFORMATION

Analysis	Preservative	Container Requirements	Collected
Explosives SW-846 8330	4°C	(2) L Glass Amber	~~Yes~~
Micellaneous Explosives SW-846 8330	4°C	(2) L Glass Amber	~~Yes~~
Total Metals SW846 6020/Mercury 7470A	4°C/HNO_3	(1) L HDPE	~~Yes~~
Diss. Metals SW846 6020/Mercury 7470A	4°C/HNO_3	(1) L HDPE	~~Yes~~
Nitrate + Nitrite (asN) EPA 353.2 & Ammonia (asN) EPA 350.1	4°C/H_2SO_4	(1) L HDPE	~~Yes~~
Selected Ion Monitoring - PAHs	4°C	(2) L Glass Amber	YES

NO

OBSERVATIONS/NOTES

FLOW — 3 GPM

DUG OUT ON 10-23-03

PHOTO # 0326

MAP

Circle if Applicable:

MS/MSD

Duplicate ID No.:

Signature(s):

DUPLICATE ID NO: 13FD

APPENDIX C.2.3
SWMU 16 SURFACE WATER SAMPLE LOG SHEETS
ROUND 1

Tetra Tech NUS, Inc.

SURFACE WATER SAMPLE LOG SHEET

Project Site Name: NSWC CRANE
Project No.: N9060 CTO 0279

[X] Stream
[] Spring
[] Pond
[] Lake
[] Other:
[] QA Sample Type:

Sample ID No.: 16SW 01 01 EF
Sample Location: 16SW 01
Sampled By: T. Rojahn
C.O.C. No.: 0983

Type of Sample:
[X] Low Concentration
[] High Concentration

SAMPLING DATA:

	Color Visual	pH Standard	S.C. mS/cm	Temp. Degrees C	Turbidity NTU	DO mg/l	Salinity %	ORP mV
Date: 4/01/03								
Time: 1400								
Depth: Full H2O Column	Green to Black							
Method: Bailer			WATER to discolored & oil sheen →					

SAMPLE COLLECTION INFORMATION:

Analysis	Preservative	Container Requirements	Collected
SVOCs (8270C)	4°C	(2) 1 L Amber	Yes
SVOCs (SIM)	4°C	(2) 1 L Amber	Yes
SVOCs (8151A)	4°C	(2) 1 L Amber	Yes
Explosives (8330)	4°C	(2) 1 L Amber	Yes
Explosives Picrates	4°C	(2) 1 L Amber	Yes
Total Metals (6020) & Total Hg (7470A)	HNO3 / 4°C	(1) 1 L HDPE	Yes
Dissolved Metals (6020) & Dis. Hg (7470A)	HNO3/ 4°C	(1) 1 L HDPE	Yes
Ammonia (350.1) & Nitrate (353.2)	H2SO4/ 4°C	(1) 1 L HDPE	Yes

OBSERVATIONS / NOTES:

3' of H2O in SUMP
No SEDIMENT

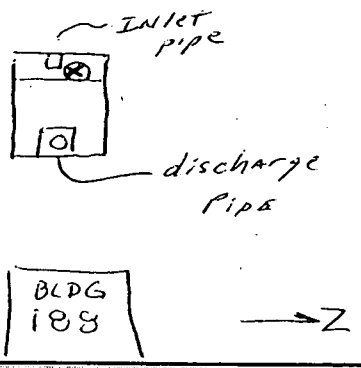

MAP:

Refer to Figure 3-3 of the QAPP for CTO 0166

Circle if Applicable:

MS/MSD —

Duplicate ID No.: —

Signature(s): Ty Rojahn

Tetra Tech NUS, Inc.

SURFACE WATER SAMPLE LOG SHEET

Project Site Name: NSWC CRANE
Project No.: N9060 CTO 0279

~~[X] Stream~~ (TR)
[] Spring
[] Pond
[] Lake
[X] Other: E. Sump
[] QA Sample Type:

Sample ID No.: 16SW 02 01 E F
Sample Location: 16SW 02
Sampled By: T. Rojahn
C.O.C. No.: 0963

Type of Sample:
[X] Low Concentration
[] High Concentration

SAMPLING DATA:

	Color Visual	pH Standard	S.C. mS/cm	Temp. Degrees C	Turbidity NTU	DO mg/l	Salinity %	ORP mV
Date: 4/10/03								
Time: 0950								
Depth: MID								
Method: Peristaltic	CLEAR	8.13	0.281	9.14	2.1	10.51	NA	90.9

SAMPLE COLLECTION INFORMATION:

Analysis	Preservative	Container Requirements	Collected
SVOCs (8270C)	4°C	(2) 1 L Amber	Yes
SVOCs (SIM)	4°C	(2) 1 L Amber	Yes
SVOCs (8151A)	4°C	(2) 1 L Amber	Yes
Explosives (8330)	4°C	(2) 1 L Amber	Yes
Explosives Picrates	4°C	(2) 1 L Amber	Yes
Total Metals (6020) & Total Hg (7470A)	HNO3 / 4°C	3 x (1) 1 L HDPE	Yes
Dissolved Metals (6020) & Dis. Hg (7470A)	HNO3/ 4°C	3 x (1) 1 L HDPE	Yes
Ammonia (350.1) & Nitrate (353.2)	H2SO4/ 4°C	3 x (1) 1 L HDPE	Yes

OBSERVATIONS / NOTES:

14 Extra 1L Ambers Collected For SVOCs & Explosives

TD 8.05
H_2O @ 4.05
Inlet Pipe <1gpm

NO SEDIMENT IN SUMP!

MAP:

Refer to Figure 3-3 of the QAPP for CTO 0166

Circle if Applicable:

MS/MSD

Duplicate ID No.: ——

Signature(s):

Tetra Tech NUS, Inc.

SURFACE WATER SAMPLE LOG SHEET

Project Site Name: NSWC CRANE
Project No.: N9060 CTO 0279

~~[X] Stream~~
[] Spring
[] Pond
[] Lake
[X] Other: W. SUMP
[] QA Sample Type:

Sample ID No.: 16SW 07 01 & F
Sample Location: 16SW 07
Sampled By: T. Rojahn
C.O.C. No.: 8969

Type of Sample:
[X] Low Concentration
[] High Concentration

SAMPLING DATA:

	Color Visual	pH Standard	S.C. mS/cm	Temp. Degrees C	Turbidity NTU	DO mg/l	Salinity %	ORP mV
Date: 4/10/03								
Time: 1330								
Depth: MID								
Method: Peristaltic	CLEAR	8.40	0.591	11.78	4.2	10.63	NA	89.1

SAMPLE COLLECTION INFORMATION:

Analysis	Preservative	Container Requirements	Collected
SVOCs (8270C)	4°C	2 x (2) 1 L Amber	Yes
SVOCs (SIM)	4°C	2 x (2) 1 L Amber	Yes
SVOCs (8151A)	4°C	2 x (2) 1 L Amber	Yes
Explosives (8330)	4°C	2 x (2) 1 L Amber	Yes
Explosives Picrates	4°C	2 x (2) 1 L Amber	Yes
Total Metals (6020) & Tolal Hg (7470A)	HNO3 / 4°C	2 x (1) 1 L HDPE	Yes
Dissolved Metals (6020) & Dis. Hg (7470A)	HNO3/ 4°C	2 x (1) 1 L HDPE	Yes
Ammonia (350.1) & Nitrate (353.2)	H2SO4/ 4°C	2 x (1) 1 L HDPE	Yes

OBSERVATIONS / NOTES:

3.6' OF H_2O IN 8.2' SUMP
INLET PIPE ~1-3 gpm
trace sudes

NO SEDIMENT IN SUMP!

MAP:

Refer to Figure 3-3 of the QAPP for CTO 0166

Circle if Applicable:

MS/MSD	Duplicate ID No.:
—	FD04100301 & F

Signature(s): T Rojahn

APPENDIX C.2.4
SWMU 16 SURFACE WATER SAMPLE LOG SHEETS
ROUND 2

Tetra Tech NUS, Inc.

SURFACE WATER SAMPLE LOG SHEET

Project Site Name: NSWC CRANE, SWMU16
Project No.: N9060 CTO 0279

[] Stream
[] Spring
[] Pond
[] Lake
[] Other: SUMP - North
[] QA Sample Type:

Sample ID No.: 16SW0102
Sample Location: SWMU 16
Sampled By: TR / SG
C.O.C. No.: 4833

Type of Sample:
[X] Low Concentration
[] High Concentration

SAMPLING DATA

	Color (Visual)	pH (S. U.)	S.C. (mS/cm)	Temp. (°C)	Turbidity (NTU)	DO (mg/l)	ORP (mV)	Other NA
Date: 12/06/03								
Time: 0905								
Depth: 0-1'								
Method: Bailer	Greenish	6.65	0.365	6.92	22	12.65	+193.9	—

SAMPLE COLLECTION INFORMATION

Analysis	Preservative	Container Requirements	Collected
Volatiles SW-846 8260B	4°C/HCl	(3) 40ml Vails	Yes
Volatiles SW-846 8015B	4°C/HCl	(3) 40ml Vails	Yes
Explosives SW-846 8330	4°C	(2) L Glass Amber	~~Yes~~
Micellaneous Explosives SW-846 8330	4°C	(2) L Glass Amber	~~Yes~~
Total Metals SW846 6020/Mercury 7470A	4°C/HNO_3	(1) L HDPE	~~Yes~~
Diss. Metals SW846 6020/Mercury 7470A	4°C/HNO_3	(1) L HDPE	~~Yes~~
Nitrate + Nitrite (asN) EPA 353.2 &	4°C/H_2SO_4	(1) L HDPE	~~Yes~~
Selected Ion Monitoring - PAHs	4°C	(2) L Glass Amber	

OBSERVATIONS / NOTES:

Ft to H_2O = 3.68 FROM SE Corner

MAP

Circle if Applicable:

MS/MSD	Duplicate ID No.:
—	—

Signature(s):

Tetra Tech NUS, Inc.

SURFACE WATER SAMPLE LOG SHEET

Project Site Name: NSWC CRANE, SWMU16
Project No.: N9060 CTO 0279

[] Stream
[] Spring
[] Pond
[] Lake
[X] Other: Sump - East
[] QA Sample Type:

Sample ID No.: 16SW0202
Sample Location: SWMU 16
Sampled By: TK / SG
C.O.C. No.: 4833

Type of Sample:
[X] Low Concentration
[] High Concentration

SAMPLING DATA

	Color (Visual)	pH (S. U.)	S.C. (mS/cm)	Temp. (°C)	Turbidity (NTU)	DO (mg/l)	ORP (mV)	Other NA
Date: 12-6-03								
Time: 0935								
Depth: 0-1								
Method: Bailer (D.S.)	Sl cloudy	7.61	0.204	9.49	120	10.69	+143.2	—

SAMPLE COLLECTION INFORMATION

Analysis	Preservative	Container Requirements	Collected
Volatiles SW-846 8260B	4°C/HCl	(3) 40ml Vails	Yes
Volatiles SW-846 8015B	4°C/HCl	(3) 40ml Vails	Yes
Explosives SW-846 8330	4°C	(2) L Glass Amber	~~Yes~~
Micellaneous Explosives SW-846 8330	4°C	(2) L Glass Amber	~~Yes~~
Total Metals SW846 6020/Mercury 7470A	4°C/HNO_3	(1) L HDPE	~~Yes~~
Diss. Metals SW846 6020/Mercury 7470A	4°C/HNO_3	(1) L HDPE	~~Yes~~
Nitrate + Nitrite (asN) EPA 353.2 &	4°C/H_2SO_4	(1) L HDPE	~~Yes~~
Selected Ion Monitoring - PAHs	4°C	(2) L Glass Amber	—

OBSERVATIONS / NOTES

Depth to H_2O = 4.03 FROM SW CORNER

MAP

Circle if Applicable:

MS/MSD: —

Duplicate ID No.: 16FD12060301

Signature(s): Ty Kopal

Tetra Tech NUS, Inc.

SURFACE WATER SAMPLE LOG SHEET

Project Site Name: NSWC CRANE, SWMU16
Project No.: N9060 CTO 0279

[] Stream
[] Spring
[] Pond
[] Lake
[] Other: SUMP - WEST
[] QA Sample Type:

Sample ID No.: 16SW0702
Sample Location: SWMU 16
Sampled By: TR/SG
C.O.C. No.: 4833

Type of Sample:
[X] Low Concentration
[] High Concentration

SAMPLING DATA

Date: 12-06-03
Time: 1008
Depth: 0-1'
Method: D:S Bailer

Color (Visual)	pH (S. U.)	S.C. (mS/cm)	Temp. (°C)	Turbidity (NTU)	DO (mg/l)	ORP (mV)	Other NA
CLEAR	7.68	0.575	12.20	5.3	10.78	+123.4	—

SAMPLE COLLECTION INFORMATION

Analysis	Preservative	Container Requirements	Collected
Volatiles SW-846 8260B	4°C/HCl	(3) 40ml Vails	Yes
Volatiles SW-846 8015B	4°C/HCl	(3) 40ml Vails	Yes
Explosives SW-846 8330	4°C	(2) L Glass Amber	~~Yes~~
Micellaneous Explosives SW-846 8330	4°C	(2) L Glass Amber	~~Yes~~
Total Metals SW846 6020/Mercury 7470A	4°C/HNO_3	(1) L HDPE	~~Yes~~
Diss. Metals SW846 6020/Mercury 7470A	4°C/HNO_3	(1) L HDPE	~~Yes~~
Nitrate + Nitrite (asN) EPA 353.2 &	4°C/H_2SO_4	(1) L HDPE	~~Yes~~
Selected Ion Monitoring - PAHs	4°C	(2) L Glass Amber	—

OBSERVATIONS/NOTES

Depth to H_2O = 4.88 From NE Corner

MAP

Circle if Applicable:

MS/MSD: —

Duplicate ID No.: —

Signature(s): Tr/Rgal

Tetra Tech NUS, Inc.

SURFACE WATER SAMPLE LOG SHEET

Project Site Name: NSWC CRANE, SWMU ~~18~~ 16
Project No.: N9060 CTO 0279

Sample ID No.: 16SW1201
Sample Location: 16SW12
Sampled By: FW
C.O.C. No.: 4808

[X] Stream
[] Spring
[] Pond
[] Lake
[] Other:
[] QA Sample Type:

Type of Sample:
[X] Low Concentration
[] High Concentration

SAMPLING DATA

	Color (Visual)	pH (S. U.)	S.C. (mS/cm)	Temp. (°C)	Turbidity (NTU)	DO (mg/l)	ORP (mV)	Other NA
Date: 10-25-03								
Time: 0935								
Depth: 4"	CLEAR	7.21	0.204	13.24	4.06	6.00	195.4	–
Method: DIRECT FILL								

SAMPLE COLLECTION INFORMATION

Analysis	Preservative	Container Requirements	Collected
Explosives SW-846 8330	4°C	(2) L Glass Amber	Yes
Micellaneous Explosives SW-846 8330	4°C	(2) L Glass Amber	Yes
Total Metals SW846 6020/Mercury 7470A	4°C/HNO_3	(1) L HDPE	Yes
Diss. Metals SW846 6020/Mercury 7470A	4°C/HNO_3	(1) L HDPE	Yes -F
Nitrate + Nitrite (asN) EPA 353.2 & Ammonia (asN) EPA 350.1	4°C/H_2SO_4	(1) L HDPE	Yes
Selected Ion Monitoring - PAHs	4°C	(2) L Glass Amber	–
Volatiles 8260B	4°C /HCl	(3) 40ml VOC Vials	YES
Volatiles 8015B	4°C/HCl	(3) ↓	YES

OBSERVATIONS / NOTES

PONDED WATER

PHOTO # 0336

MAP

Circle if Applicable:
~~MS/MSD~~ Duplicate ID No.:

Signature(s):

Tetra Tech NUS, Inc.

SURFACE WATER SAMPLE LOG SHEET

Project Site Name: NSWC CRANE, SWMU16
Project No.: N9060 CTO 0279

[X] Stream
[] Spring
[] Pond
[] Lake
[] Other:
[] QA Sample Type:

Sample ID No.: 16SW1301
Sample Location: 16SW13
Sampled By: FW
C.O.C. No.: 4808

Type of Sample:
[X] Low Concentration
[] High Concentration

SAMPLING DATA

	Color (Visual)	pH (S. U.)	S.C. (mS/cm)	Temp. (°C)	Turbidity (NTU)	DO (mg/l)	ORP (mV)	Other NA
Date: 10-25-03								
Time: 1045								
Depth: 4"								
Method: DIRECT FILL		6.40	0.168	13.68	15.9	2.94	68.3	—

SAMPLE COLLECTION INFORMATION

Analysis	Preservative	Container Requirements	Collected
Volatiles SW-846 8260B	4°C/HCl	(3) 40ml Vails	Yes
Volatiles SW-846 8015B	4°C/HCl	(3) 40ml Vails	Yes
Explosives SW-846 8330	4°C	(2) L Glass Amber	Yes
Micellaneous Explosives SW-846 8330	4°C	(2) L Glass Amber	Yes
Total Metals SW846 6020/Mercury 7470A	4°C/HNO_3	(1) L HDPE	Yes
Diss. Metals SW846 6020/Mercury 7470A	4°C/HNO_3	(1) L HDPE	Yes
Nitrate + Nitrite (asN) EPA 353.2 &	4°C/H_2SO_4	(1) L HDPE	Yes
Selected Ion Monitoring - PAHs	4°C	(2) L Glass Amber	—

OBSERVATIONS / NOTES

PONDED WATER
PHOTO # 0338

MAP

Circle if Applicable:

MS/MSD

Duplicate ID No.:

Signature(s):

Tetra Tech NUS, Inc.

SURFACE WATER SAMPLE LOG SHEET

Project Site Name: NSWC CRANE, SWMU16
Project No.: N9060 CTO 0279

[] Stream
[] Spring
[] Pond
[] Lake
[] Other: PONDED No Flow
[] QA Sample Type:

Sample ID No.: 16SW1401
Sample Location: 16SW14
Sampled By: MC/FW/TK
C.O.C. No.: 4806

Type of Sample:
[X] Low Concentration
[] High Concentration

SAMPLING DATA

	Color (Visual)	pH (S. U.)	S.C. (mS/cm)	Temp. (°C)	Turbidity (NTU)	DO (mg/l)	ORP (mV)	Other NA
Date: 10/24/03								
Time: 1500								
Depth: M10								
Method: Direct	CLEAR	7.14	0.299	11.70	2.57	7.22	254.7	—

SAMPLE COLLECTION INFORMATION

Analysis	Preservative	Container Requirements	Collected
Volatiles SW-846 8260B	4°C/HCl	(3) 40ml Vails	Yes
Volatiles SW-846 8015B	4°C/HCl	(3) 40ml Vails	Yes
Explosives SW-846 8330	4°C	(2) L Glass Amber	Yes
Micellaneous Explosives SW-846 8330	4°C	(2) L Glass Amber	Yes
Total Metals SW846 6020/Mercury 7470A	4°C/HNO_3	(1) L HDPE	Yes
Diss. Metals SW846 6020/Mercury 7470A	4°C/HNO_3	(1) L HDPE	Yes
Nitrate + Nitrite (asN) EPA 353.2 &	4°C/H_2SO_4	(1) L HDPE	Yes
Selected Ion Monitoring - PAHs	4°C	(2) L Glass Amber	—

-F

OBSERVATIONS/NOTES:

Depth 6"
PHOTO # (0332)

MAP

Circle if Applicable:

MS/MSD	Duplicate ID No.:
—	—

Signature(s): Tom Neal

Tetra Tech NUS, Inc.

SURFACE WATER SAMPLE LOG SHEET

Project Site Name: NSWC CRANE, SWMU16
Project No.: N9060 CTO 0279

[X] Stream
[] Spring
[] Pond
[] Lake
[] Other:
[] QA Sample Type:

Sample ID No.: 16SW1501
Sample Location: 16SW15
Sampled By: FW
C.O.C. No.: 4808

Type of Sample:
[X] Low Concentration
[] High Concentration

SAMPLING DATA

	Color (Visual)	pH (S. U.)	S.C. (mS/cm)	Temp. (°C)	Turbidity (NTU)	DO (mg/l)	ORP (mV)	Other NA
Date: 10-25-03								
Time: 0810								
Depth: 4"								
Method: DIRECT FILL	CLEAR	6.51	0.378	12.45	15.9	2.87	194.1	–

SAMPLE COLLECTION INFORMATION

Analysis	Preservative	Container Requirements	Collected
Volatiles SW-846 8260B	4°C/HCl	(3) 40ml Vails	Yes
Volatiles SW-846 8015B	4°C/HCl	(3) 40ml Vails	Yes
Explosives SW-846 8330	4°C	(2) L Glass Amber	Yes
Micellaneous Explosives SW-846 8330	4°C	(2) L Glass Amber	Yes
Total Metals SW846 6020/Mercury 7470A	4°C/HNO_3	(1) L HDPE	Yes
Diss. Metals SW846 6020/Mercury 7470A	4°C/HNO_3	(1) L HDPE	Yes ~F
Nitrate + Nitrite (asN) EPA 353.2 &	4°C/H_2SO_4	(1) L HDPE	Yes
Selected Ion Monitoring - PAHs	4°C	(2) L Glass Amber	–

OBSERVATIONS / NOTES:

PONDED WATER
PHOTO # 0335

MAP:

Circle if Applicable:

MS/MSD	Duplicate ID No.:
–	–

Signature(s): [illegible]

Tetra Tech NUS, Inc.

SURFACE WATER SAMPLE LOG SHEET

Project Site Name: NSWC CRANE, SWMU16
Project No.: N9060 CTO 0279

Sample ID No.: 16SW1701
Sample Location: 16SW17
Sampled By: MC / TR
C.O.C. No.: 4806

[X] Stream PONDED
[] Spring
[] Pond
[] Lake
[] Other:
[] QA Sample Type:

Type of Sample:
[X] Low Concentration
[] High Concentration

SAMPLING DATA

	Color (Visual)	pH (S. U.)	S.C. (mS/cm)	Temp. (°C)	Turbidity (NTU)	DO (mg/l)	ORP (mV)	Other NA
Date: 10/24/03								
Time: 1030								
Depth: M10								
Method: DIRECT	CLEAR	6.93	0.154	9.61	3.39	6.99	204.0	—

SAMPLE COLLECTION INFORMATION

Analysis	Preservative	Container Requirements	Collected
Volatiles SW-846 8260B	4°C/HCl	(3) 40ml Vails	Yes
Volatiles SW-846 8015B	4°C/HCl	(3) 40ml Vails	Yes
Explosives SW-846 8330	4°C	(2) L Glass Amber	Yes
Micellaneous Explosives SW-846 8330	4°C	(2) L Glass Amber	Yes
Total Metals SW846 6020/Mercury 7470A	4°C/HNO_3	(1) L HDPE	Yes -F
Diss. Metals SW846 6020/Mercury 7470A	4°C/HNO_3	(1) L HDPE	Yes
Nitrate + Nitrite (asN) EPA 353.2 &	4°C/H_2SO_4	(1) L HDPE	Yes
Selected Ion Monitoring - PAHs	4°C	(2) L Glass Amber	—

OBSERVATIONS / NOTES

PONDED NO FLOW
PHOTO # 0329

MAP

Circle if Applicable:

MS/MSD	Duplicate ID No.:
YES	16FD10240301

Signature(s):

Tetra Tech NUS, Inc.

SURFACE WATER SAMPLE LOG SHEET

Project Site Name: NSWC CRANE, SWMU16
Project No.: N9060 CTO 0279

Sample ID No.: 16SW1801
Sample Location: 16SW18
Sampled By: MC
C.O.C. No.: 4806

[X] Stream
[] Spring
[] Pond
[] Lake
[] Other:
[] QA Sample Type:

Type of Sample:
[X] Low Concentration
[] High Concentration

SAMPLING DATA

	Color (Visual)	pH (S. U.)	S.C. (mS/cm)	Temp. (°C)	Turbidity (NTU)	DO (mg/l)	ORP (mV)	Other NA
Date: 10-24-03								
Time: 1400								
Depth: MID	CLEAR	6.39	0.108	12.88	1.0	5.74	251.6	—
Method: Direct								

SAMPLE COLLECTION INFORMATION

Analysis	Preservative	Container Requirements	Collected
Volatiles SW-846 8260B	4°C/HCl	(3) 40ml Vails	Yes
Volatiles SW-846 8015B	4°C/HCl	(3) 40ml Vails	Yes
Explosives SW-846 8330	4°C	(2) L Glass Amber	Yes
Micellaneous Explosives SW-846 8330	4°C	(2) L Glass Amber	Yes
Total Metals SW846 6020/Mercury 7470A	4°C/HNO_3	(1) L HDPE	Yes
Diss. Metals SW846 6020/Mercury 7470A	4°C/HNO_3	(1) L HDPE	Yes -F
Nitrate + Nitrite (asN) EPA 353.2 &	4°C/H_2SO_4	(1) L HDPE	Yes
Selected Ion Monitoring - PAHs	4°C	(2) L Glass Amber	—

OBSERVATIONS / NOTES

6" DEEP
PHOTO #(0330)

2" DEEP
1' IN 3 SEC
2' WIDE
+
1' IN 5 SEC
1' WIDE
1" deep

MAP

Circle if Applicable:

MS/MSD	Duplicate ID No.:
—	—

Signature(s):

Tetra Tech NUS, Inc.

SURFACE WATER SAMPLE LOG SHEET

Project Site Name: NSWC CRANE, SWMU16
Project No.: N9060 CTO 0279

Sample ID No.: 16SW2001
Sample Location: 16SW20
Sampled By: EW
C.O.C. No.: 4808

[X] Stream
[] Spring
[] Pond
[] Lake
[] Other:
[] QA Sample Type:

Type of Sample:
[X] Low Concentration
[] High Concentration

SAMPLING DATA

	Color (Visual)	pH (S. U.)	S.C. (mS/cm)	Temp. (°C)	Turbidity (NTU)	DO (mg/l)	ORP (mV)	Other NA
Date: 10-25-03								
Time: 1100								
Depth: 2"	CLEAR	7.08	0.202	13.75	7.95	7.23	183.4	–
Method: DIRECT FILL								

SAMPLE COLLECTION INFORMATION

Analysis	Preservative	Container Requirements	Collected
Volatiles SW-846 8260B	4°C/HCl	(3) 40ml Vails	Yes
Volatiles SW-846 8015B	4°C/HCl	(3) 40ml Vails	Yes
Explosives SW-846 8330	4°C	(2) L Glass Amber	Yes
Micellaneous Explosives SW-846 8330	4°C	(2) L Glass Amber	Yes
Total Metals SW846 6020/Mercury 7470A	4°C/HNO_3	(1) L HDPE	Yes
Diss. Metals SW846 6020/Mercury 7470A	4°C/HNO_3	(1) L HDPE	Yes
Nitrate + Nitrite (asN) EPA 353.2 &	4°C/H_2SO_4	(1) L HDPE	Yes
Selected Ion Monitoring - PAHs	4°C	(2) L Glass Amber	–

-F

OBSERVATIONS/NOTES

PONDED WATER
PHOTO # 0337

MAP

Circle if Applicable:
MS/MSD
Duplicate ID No.:

Signature(s):

Tetra Tech NUS, Inc.

SURFACE WATER SAMPLE LOG SHEET

Project Site Name: NSWC CRANE, SWMU16
Project No.: N9060 CTO 0279

[] Stream
[] Spring
[] Pond
[] Lake
[] Other: PONDED NO FLOW
[] QA Sample Type:

Sample ID No.: 16SW2101
Sample Location: 16SW21
Sampled By: MC / TR
C.O.C. No.: 4806

Type of Sample:
[X] Low Concentration
[] High Concentration

SAMPLING DATA

	Color (Visual)	pH (S. U.)	S.C. (mS/cm)	Temp. (°C)	Turbidity (NTU)	DO (mg/l)	ORP (mV)	Other NA
Date: 10/24/03								
Time: 1518								
Depth: SURFACE								
Method: Direct	CLEAR	6.78	0.184	15.12	10.59	1.91	239.6	—

SAMPLE COLLECTION INFORMATION

Analysis	Preservative	Container Requirements	Collected
Volatiles SW-846 8260B	4°C/HCl	(3) 40ml Vails	Yes
Volatiles SW-846 8015B	4°C/HCl	(3) 40ml Vails	Yes
Explosives SW-846 8330	4°C	(2) L Glass Amber	Yes
Micellaneous Explosives SW-846 8330	4°C	(2) L Glass Amber	Yes
Total Metals SW846 6020/Mercury 7470A	4°C/HNO_3	(1) L HDPE	Yes
Diss. Metals SW846 6020/Mercury 7470A	4°C/HNO_3	(1) L HDPE	Yes
Nitrate + Nitrite (asN) EPA 353.2 &	4°C/H_2SO_4	(1) L HDPE	Yes
Selected Ion Monitoring - PAHs	4°C	(2) L Glass Amber	—

-F

OBSERVATIONS/NOTES

Depth = 2"
PHOTO (# 0333)

MAP

Circle if Applicable:

MS/MSD	Duplicate ID No.:
—	—

Signature(s): Troy Rogers

APPENDIX C.3.1
SWMU 13 GROUND WATER SAMPLE LOG SHEETS
ROUND 1

Tetra Tech NUS, Inc.

GROUNDWATER SAMPLE LOG SHEET

Project Site Name: NSWC CRANE
Project No.: N9060 CTO 0279

[] Domestic Well Data
[X] Monitoring Well Data
[] Other Well Type:
[] QA Sample Type:

Sample ID No.: 13GWT01 01
Sample Location: 13MWT01
Sampled By: T. ROJAHN
C.O.C. No.: 0992
Type of Sample:
[X] Low Concentration
[] High Concentration

SAMPLING DATA:

	Color Visual	pH Standard	S.C. mS/cm	Temp. °C	Turbidity NTU	DO mg/l	SALINITY %	ORP mV
Date: 4/26/03								
Time: 1024								
Method: SAME	CLEAR	4.68	0.229	12.59	3.8	1.28	NA	+220

PURGE DATA:

	Volume	pH	S.C.	Temp. (C)	Turbidity	DO	SALINITY	ORP
Date: 4/26/03								
Method: Peristaltic								
Monitor Reading (ppm): —								
Well Casing Diameter & Material								
Type: 2" dia. PVC								
Total Well Depth (TD): 17.95	SEE LOW FLOW PURGE DATA SHEET							
Static Water Level (WL): 6.68								
One Casing Volume(gal/L): 7								
Start Purge (hrs): 0912								
End Purge (hrs): 1022								
Total Purge Time (min): 70								
Total Vol. Purged (gal/L): 7.3								

SAMPLE COLLECTION INFORMATION:

Analysis	Preservative	Container Requirements	Collected
VOCs 8260B	HCl / 4°C	(3) 40 mL Vials	NO
VOCs 8015B	HCl / 4°C	(2) 40 mL Vials	
SVOCs (8270C)	4° C	(2) 1 L Amber	
SVOCs (SIM)	4° C	(2) 1 L Amber	
SVOCs (8151A)	4° C	(2) 1 L Amber	
Explosives (8330)	4° C	(2) 1 L Amber	Yes
Total Metals (6020) & Total Hg (7470A)	HNO3 / 4° C	(1) 1 L HDPE	Yes
Dissolved Metals (6020) & Dis. Hg (7470A)	HNO3/ 4° C	(1) 1 L HDPE	~~Yes~~ NO
Ammonia (350.1) & Nitrate (353.2)	H2SO4/ 4° C	(1) 1 L HDPE	Yes

OBSERVATIONS / NOTES:

Intake of Pump @~12.95'

Circle if Applicable:

MS/MSD	Duplicate ID No.:	Signature(s):
—	—	[signature]

TBD: To Be Determined

Tetra Tech NUS, Inc.

LOW FLOW PURGE DATA SHEET

PROJECT SITE NAME: NSWC CRANE
PROJECT NUMBER: N9060 CTO 0279

WELL ID.: 13MWT01
DATE: 4/26/03

Time (Hrs.)	Water Level (Ft. below TOC)	Flow (mL/Min.)	Temp. (Celsius)	pH (S.U.)	Cond. (mS/cm)	DO (mg/L)	ORP (mV)	Turb. (NTU)	Comments (Volume & Color)
0912	6.68	—	—	—	—	—	—	—	Start Purge
0922	7.48	120	12.12	4.93	0.218	1.52	+158	3.8	1200 ml CLEAR
0932	7.56	110	12.27	4.77	0.224	1.39	+186	4.1	2300 ml "
0942	7.60	100	12.40	4.73	0.228	1.31	+200	3.5	3300 ml "
0952	7.64	100	12.42	4.71	0.228	1.32	+207	4.2	4300 ml "
1002	7.66	100	12.52	4.69	0.229	1.30	+214	3.2	5300 ml "
1012	7.68	100	12.60	4.67	0.231	1.28	+219	3.6	6300 ml "
1022	7.69	100	12.59	4.68	0.229	1.28	+220	3.8	7300 ml "
1024	—	—	—	—	—	—	—	—	Sample Time

SIGNATURE(S): Terry Rojek

TL: MIN VOL.

Tetra Tech NUS, Inc.

GROUNDWATER SAMPLE LOG SHEET

Project Site Name: NSWC CRANE
Project No.: N9060 CTO 0279

[] Domestic Well Data
[X] Monitoring Well Data
[] Other Well Type:
[] QA Sample Type:

Sample ID No.: 13GWT07-01
Sample Location: 13MWT07
Sampled By: R. BALKOVEC
C.O.C. No.: 0992
Type of Sample:
[X] Low Concentration
[] High Concentration

SAMPLING DATA:

	Color	pH	S.C.	Temp.	Turbidity	DO	SALINITY	ORP
Date: 4/26/03	Visual	Standard	mS/cm	°C	NTU	mg/l	%	mV
Time: 1536								
Method: PERISTALTIC	CLEAR	4.61	1.244	15.28	6.8	1.48	NA	+191.0

PURGE DATA:

	Volume	pH	S.C.	Temp. (C)	Turbidity	DO	SALINITY	ORP
Date: 4/26/03								
Method: PERISTALTIC								
Monitor Reading (ppm): —								
Well Casing Diameter & Material								
Type: 2" dia. PVC								
Total Well Depth (TD): 29.50	SEE LOW FLOW PURGE DATA SHEET							
Static Water Level (WL): 17.28'								
One Casing Volume (gal/L): 2								
Start Purge (hrs): 1246								
End Purge (hrs): 1535								
Total Purge Time (min): 169								
Total Vol. Purged (gal/L): 3.3								

SAMPLE COLLECTION INFORMATION:

Analysis	Preservative	Container Requirements	Collected
VOCs 8260B	HCl / 4°C	(3) 40 mL Vials	NO
VOCs 8015B	HCl / 4°C	(2) 40 mL Vials	
SVOCs (8270C)	4° C	(2) 1 L Amber	
SVOCs (SIM)	4° C	(2) 1 L Amber	
SVOCs (8151A)	4° C	(2) 1 L Amber	
Explosives (8330)	4° C	(2) 1 L Amber	Yes
Total Metals (6020) & Total Hg (7470A)	HNO3 / 4° C	(1) 1 L HDPE	Yes
Dissolved Metals (6020) & Dis. Hg (7470A)	HNO3/ 4° C	(1) 1 L HDPE	~~Yes~~ NO
Ammonia (350.1) & Nitrate (353.2)	H2SO4/ 4° C	(1) 1 L HDPE	Yes

OBSERVATIONS / NOTES:

- STARTED SAMPLING @ 1536. WELL RAN DRY AFTER 1L. FOR EXP SAMPLED. WILL ALLOW WELL TO RECHARGE BEFORE SAMPLING IS RESUMED
- 4/27/03 WL: 21.35'. 8.15' OF WATER. FINISH SAMPLING @ 0830
  TURB 6.0 DURING SAMPLING.

Circle if Applicable:

MS/MSD

Duplicate ID No.:

Signature(s): Robert Balkovec

TBD: To Be Determined

Tetra Tech NUS, Inc.

LOW FLOW PURGE DATA SHEET

PROJECT SITE NAME: NSWC CRANE
PROJECT NUMBER: N9060 CTO O279

WELL ID.: 13MW702
DATE: 4/26/05

Time (Hrs.)	Water Level (Ft. below TOC)	Flow (mL/Min.)	Temp. (Celsius)	pH (S.U.)	Cond. (mS/cm)	DO (mg/L)	ORP (mV)	Turb. (NTU)	Comments (Volume & Color)	
1246	17.78	START							CLEAR	
1250	18.02	160	15.88	4.56	1.240	4.08	+239.1	19		.72 L
1255	18.49	130	15.24	4.37	1.228	2.41	+276.3	18		1.37 L
1300	18.85	75	15.58	4.31	1.241	2.78	+240.4	17		—
1305	19.61	75	15.62	4.29	1.243	2.73	+249.2	21	UNABLE TO LOWER RATE	2.1 L
1310	20.05	75	15.63	4.25	1.243	2.70	+303.1	20		—
1315	20.26	75	15.45	4.26	1.240	2.67	+304	20		2.85 L
1325	20.71	75	15.65	4.27	1.241	2.67	+306.1	20		—
1335	21.19	75	15.55	4.32	1.240	2.68	+306.2	19		3.6 L
1345	21.72	75	15.56	4.38	1.241	2.67	+301.1	16		—
1355	22.20	75	15.52	4.54	1.243	2.69	+284.7	17		5.1 L
1405	22.69	75	15.51	4.56	1.245	2.66	+282.9	17		—
1415	23.14	75	15.56	4.59	1.247	2.64	+276.6	15		6.6 L
1425	23.61	75	15.39	4.60	1.250	2.63	+257.9	16		—
1435	24.00	75	15.40	4.62	1.250	2.61	+240.1	15	> 1 vol	8.1 L
1445	24.40	75	15.40	4.63	1.250	2.57	+229.3	13	2 HRS.	—
1455	24.83	75	15.27	4.63	1.247	2.41	+198.7	13		9.6 L
1505	25.35	75	15.23	4.62	1.246	2.26	+188.6	12		—
1515	25.90	75	15.27	4.60	1.244	2.09	+192.6	12		11.1 L
1525	26.29	75	15.28	4.60	1.245	2.00	+192.7	8.9		—
1530	26.57	75	15.30	4.61	1.244	2.01	+191.4	7.4		~~12.6~~
1535	26.80	75	15.28	4.61	1.244	1.98	+191.0	6.8	3 HRS	12.6 L
→ End Purge Sample @		1536								

SIGNATURE(S): Robert Bulkner 7.5 L = 1 vol 24.270

PAGE 2 OF 2

Tetra Tech NUS, Inc.

GROUNDWATER SAMPLE LOG SHEET

Project Site Name: NSWC CRANE
Project No.: N9060 CTO 0279

[] Domestic Well Data
[X] Monitoring Well Data
[] Other Well Type:
[] QA Sample Type:

Sample ID No.: 13GWT03 01 & F
Sample Location: 13MWT03
Sampled By: B Bauguess
C.O.C. No.: 0982
Type of Sample:
[X] Low Concentration
[] High Concentration

SAMPLING DATA:

Date: 4/26/03	Color	pH	S.C.	Temp.	Turbidity	DO	SALINITY	ORP
Time: 1146	Visual	Standard	mS/cm	°C	NTU	mg/l	%	mV
Method: PERISTALTIC	CLEAR	5.56	0.445	13.14	38	4.50	NA	457.7

PURGE DATA:

Date: 4/26/03	Volume	pH	S.C.	Temp. (C)	Turbidity	DO	SALINITY	ORP
Method: PERISTALTIC								
Monitor Reading (ppm): —								
Well Casing Diameter & Material								
Type: 2" dia. PVC								
Total Well Depth (TD): 18.05	SEE LOW FLOW PURGE DATA SHEET							
Static Water Level (WL): 8.67								
One Casing Volume (gal/L): 1.5								
Start Purge (hrs): 0745								
End Purge (hrs): 1145								
Total Purge Time (min): 240								
Total Vol. Purged (gal/L): 4.6								

SAMPLE COLLECTION INFORMATION:

Analysis	Preservative	Container Requirements	Collected
VOCs 8260B	HCl / 4°C	(3) 40 mL Vials	NO
VOCs 8015B	HCl / 4°C	(2) 40 mL Vials	
SVOCs (8270C)	4° C	(2) 1 L Amber	
SVOCs (SIM)	4° C	(2) 1 L Amber	
SVOCs (8151A)	4° C	(2) 1 L Amber	
Explosives (8330)	4° C	(2) 1 L Amber	Yes
Total Metals (6020) & Tolal Hg (7470A)	HNO3 / 4° C	(1) 1 L HDPE	Yes
Dissolved Metals (6020) & Dis. Hg (7470A)	HNO3/ 4° C	(1) 1 L HDPE	Yes
Ammonia (350.1) & Nitrate (353.2)	H2SO4/ 4° C	(1) 1 L HDPE	Yes

OBSERVATIONS / NOTES:

WL = 19.70 @ TIME OF SAMPLING.

Circle if Applicable:

MS/MSD	Duplicate ID No.:
—	—

Signature(s): Robert Bulkin

TBD: To Be Determined

Tetra Tech NUS, Inc.

LOW FLOW PURGE DATA SHEET

PROJECT SITE NAME: NSWC CRANE
PROJECT NUMBER: N9060 CTO 0279

WELL ID.: BMW 03
DATE: 4/26/03

Time (Hrs.)	Water Level (Ft. below TOC)	Flow (mL/Min.)	Temp. (Celsius)	pH (S.U.)	Cond. (mS/cm)	DO (mg/L)	ORP (mV)	Turb. (NTU)	Comments (Volume & Color)
0745	8.67	START							HAZY
0750	8.98	140	11.35	5.82	0.390	6.75	+147.2	200	.7L
0755	9.46	125	11.39	5.74	0.388	6.48	+173.1	150	1.33L
0800	9.64	100	11.47	5.73	0.389	6.46	+180.4	60	1.83L
0805	9.81	75	11.62	5.73	0.390	6.45	+186.0	30	2.2L
0810	10.03	75	11.76	5.71	0.392	6.44	+192.1	34	SLIGHT HAZE 2.6L
0815	10.15	70	12.05	5.70	0.393	6.51	+195.5	30	2.93L
0820	10.32	70	12.22	5.70	0.396	6.56	+199.1	33	UNABLE TO PUMP BELOW 70 mL/min –
0825	10.51	70	12.30	5.70	0.399	6.67	+202.4	40	3.65L
0830	10.65	70	12.42	5.70	0.401	6.74	+204.1	45	–
0835	10.80	70	12.46	5.70	0.402	6.61	+204.7	45	4.3L
0840	10.96	70	12.47	5.70	0.403	6.54	+205.0	44	–
0845	11.12	70	12.48	5.70	0.404	6.48	+205.4	45	5.0L
0850	11.30	70	12.53	5.69	0.404	6.21	+203.4	42	–
0855	11.52	70	12.57	5.68	0.404	6.04	+201.9	39	1 vol 5.7L
0900	11.65	70	12.64	5.66	0.404	5.80	+199.7	42	–
0905	11.78	70	12.65	5.61	0.398	4.62	+199.1	55	6.4L
0910	11.43	70	12.66	5.56	0.394	4.89	+197.7	52	–
0915	12.08	70	12.76	5.56	0.396	4.20	+194.1	50	7.1L
0925	12.30	70	12.88	5.55	0.400	4.30	+190.1	45	– 7.8L
0935	12.62	70	12.83	5.51	0.401	4.45	+191.0	45	[redacted] 8.5L
0945	12.93	70	12.98	5.51	0.402	4.71	+186.1	55	2 HRS. – 9.2L
0955	13.20	70	13.09	5.55	0.410	4.80	+174.1	60	9.9L [redacted]
1005	13.48	70	13.15	5.63	0.421	4.93	+160.2	65	–
1015	13.73	70	13.05	5.65	0.429	4.88	+154.0	55	11.3
1025	13.96	70	13.20	5.66	0.435	4.78	+155.6	55	~ 2 vol –
1035	14.17	70	13.22	5.63	0.437	4.70	+156.0	45	12.7
1045	14.37	70	13.06	5.62	0.437	4.71	+153.6	45	3 HRS. –
1055	14.63	70	13.15	5.60	0.440	4.67	+153.3	40	14.1 L
1105	14.85	70	13.27	5.60	0.445	4.55	+154.4	29	–

SIGNATURE(S): Robert Balbner

5.7L = 1 vol. TO. 18.05

Tetra Tech NUS, Inc.

LOW FLOW PURGE DATA SHEET

PROJECT SITE NAME: NSWC CRANE
PROJECT NUMBER: N9060 CTO 0279

WELL ID.: 13MW703
DATE: 4/26/03

Time (Hrs.)	Water Level (Ft. below TOC)	Flow (mL/Min.)	Temp. (Celsius)	pH (S.U.)	Cond. (mS/cm)	DO (mg/L)	ORP (mV)	Turb. (NTU)	Comments (Volume & Color)
1115	15.05	70	13.12	5.57	0.446	4.52	+153.3	72	.7 Decrease IN WL 15.5 L
1125	15.27	70	13.18	5.58	0.449	4.52	+153.1	25	
1135	15.44	70	13.16	5.57	0.447	4.52	+152.8	40	2.3 vol 16.4 L
1145	15.70	70	13.14	5.56	0.445	4.50	+152.7	38	4 hrs. − 17.6 L
→ End Purge									
	Sample @	1146							

SIGNATURE(S): Robert Balthrop

Tetra Tech NUS, Inc.

GROUNDWATER SAMPLE LOG SHEET

Project Site Name: NSWC CRANE
Project No.: N9060 CTO 0279

[] Domestic Well Data
[X] Monitoring Well Data
[] Other Well Type:
[] QA Sample Type:

Sample ID No.: 13GWT04 01
Sample Location: 13MWT04
Sampled By: B. BALKOVEC
C.O.C. No.: 0992
Type of Sample:
[X] Low Concentration
[] High Concentration

SAMPLING DATA:

Date: 4/27/03	Color	pH	S.C.	Temp.	Turbidity	DO	SALINITY	ORP
Time: 1051	Visual	Standard	mS/cm	°C	NTU	mg/l	%	mV
Method: PERISTALTIC	CLEAR	4.77	0.316	13.73	6.0	4.30	NA	+266.1

PURGE DATA:

Date: 4/27/03	Volume	pH	S.C.	Temp. (C)	Turbidity	DO	SALINITY	ORP
Method: PERISTALTIC								
Monitor Reading (ppm): —								
Well Casing Diameter & Material								
Type: 2" dia. PVC								
Total Well Depth (TD): 17.80	SEE LOW FLOW PURGE DATA SHEET							
Static Water Level (WL): 13.86								
One Casing Volume (gal/L): .64								
Start Purge (hrs): 0946								
End Purge (hrs): 1050								
Total Purge Time (min): 94								
Total Vol. Purged (gal/L): 1.8								

SAMPLE COLLECTION INFORMATION:

Analysis	Preservative	Container Requirements	Collected
VOCs 8260B	HCl / 4°C	(3) 40 mL Vials	NO
VOCs 8015B	HCl / 4°C	(2) 40 mL Vials	
SVOCs (8270C)	4°C	(2) 1 L Amber	
SVOCs (SIM)	4°C	(2) 1 L Amber	
SVOCs (8151A)	4°C	(2) 1 L Amber	
Explosives (8330)	4°C	(2) 1 L Amber	Yes
Total Metals (6020) & Total Hg (7470A)	HNO3 / 4°C	(1) 1 L HDPE	Yes
Dissolved Metals (6020) & Dis. Hg (7470A)	HNO3/ 4°C	(1) 1 L HDPE	~~Yes~~ NO
Ammonia (350.1) & Nitrate (353.2)	H2SO4/ 4°C	(1) 1 L HDPE	Yes

OBSERVATIONS / NOTES:

Circle if Applicable:

MS/MSD	Duplicate ID No.:
—	—

Signature(s): Robert Balkovec

TBD: To Be Determined

Tetra Tech NUS, Inc.

LOW FLOW PURGE DATA SHEET

PROJECT SITE NAME: NSWC CRANE
PROJECT NUMBER: N9060 CTO 0279

WELL ID.: BMW704
DATE: 4/27/03

Time (Hrs.)	Water Level (Ft. below TOC)	Flow (mL/Min.)	Temp. (Celsius)	pH (S.U.)	Cond. (mS/cm)	DO (mg/L)	ORP (mV)	Turb. (NTU)	Comments (Volume & Color)	Vol.
0916	13.86	START							BROWN	
0918	14.04	100								
0920	14.10	100							CELL NOT FILLED YET!	
0921	—	100	13.81	3.55	1.374	2.18	+265.7	7999		
0925	14.22							→	CLEANED OUT CELL	.9 L
0930	14.37	80	13.10	4.87	0.263	7.42	+190.2	210	HAZY BROWN.	1.3 L
0935	14.44	70	13.12	5.26	0.224	7.38	+168.6	70	UNABLE TO LOWER RATE	1.65 L
0940	14.50	70	13.17	5.34	0.216	7.34	+172.1	100		—
0945	14.45	70	13.26	5.34	0.215	7.31	+176.9	130	≥1 vol STABLE WL	2.35 L
0950	14.51	70	13.30	5.32	0.214	7.22	+182.4	150	>1 vol	2.7 L
1000	14.61	70	13.29	5.20	0.224	6.47	+192.7	31		3.4 L
1010	14.65	70	13.38	5.06	0.245	5.84	+194.4	20		4.1 L
1020	14.67	70	13.39	4.91	0.277	5.14	+199.7	15	72 HRS. 2 vols.	4.8 L
1030	14.68	70	13.69	4.76	0.310	4.50	+206.7	12		5.5 L
1040	14.65	70	13.70	4.78	0.314	4.48	+214.2	8.0	CLEAR	6.2 L
1045	14.66	70	13.71	4.77	0.316	4.35	+215.1	8.3		~~6.8 L~~
1050	14.66	70	13.73	4.77	0.316	4.30	+216.1	6.0		6.9 L
	→ END PURGE									
	SAMPLED @	1051								

SIGNATURE(S): Robert Bulkner 2.4 L = 1 vol.

Tetra Tech NUS, Inc.

GROUNDWATER SAMPLE LOG SHEET

Project Site Name: NSWC CRANE
Project No.: N9060 CTO 0279

[] Domestic Well Data
[X] Monitoring Well Data
[] Other Well Type:
[] QA Sample Type:

Sample ID No.: 13GWT0501 & F
Sample Location: 13MWT05
Sampled By: T. Rogan
C.O.C. No.: 0992
Type of Sample:
[X] Low Concentration
[] High Concentration

SAMPLING DATA:

	Color Visual	pH Standard	S.C. mS/cm	Temp. °C	Turbidity NTU	DO mg/l	SALINITY %	ORP mV
Date: 4/27/03								
Time: 0910								
Method: SAME	CLEAR	5.83	0.632	15.18	8.8	0.60	—	76 ~~75~~ (TR)

PURGE DATA:

Date: 4/26/03	Volume	pH	S.C.	Temp. (C)	Turbidity	DO	SALINITY	ORP
Method: Peristaltic								
Monitor Reading (ppm): —								
Well Casing Diameter & Material								
Type: 2" dia. PVC								
Total Well Depth (TD): 19.15	SEE LOW FLOW PURGE DATA SHEET							
Static Water Level (WL): 6.02								
One Casing Volume(gal/L) 8.2								
Start Purge (hrs): 1117								
End Purge (hrs): 1349								
Total Purge Time (min): 152								
Total Vol. Purged (gal/L) 23.4								

SAMPLE COLLECTION INFORMATION:

Analysis	Preservative	Container Requirements	Collected
VOCs 8260B	HCl / 4°C	(3) 40 mL Vials	No
VOCs 8015B	HCl / 4°C	(2) 40 mL Vials	
SVOCs (8270C)	4° C	(2) 1 L Amber	
SVOCs (SIM)	4° C	(2) 1 L Amber	
SVOCs (8151A)	4° C	(2) 1 L Amber	
Explosives (8330)	4° C	(2) 1 L Amber	Yes
Total Metals (6020) & Total Hg (7470A)	HNO3 / 4° C	(1) 1 L HDPE	Yes
Dissolved Metals (6020) & Dis. Hg (7470A)	HNO3/ 4° C	(1) 1 L HDPE	Yes
Ammonia (350.1) & Nitrate (353.2)	H2SO4/ 4° C	(1) 1 L HDPE	Yes

OBSERVATIONS / NOTES:

W.L 4/27/03 - 7.35'
@ 0940 Hrs Turb. increased to 350 NTUs - NEED to collect a filtered sample.

Circle if Applicable:

MS/MSD	Duplicate ID No.:
—	—

Signature(s): T. Rogan

TBD: To Be Determined

Tetra Tech NUS, Inc.

LOW FLOW PURGE DATA SHEET

PROJECT SITE NAME: NSWC CRANE
PROJECT NUMBER: N9060 CTO 0279

WELL ID.: 13MWT05
DATE: 4/26/03

Time (Hrs.)	Water Level (Ft. below TOC)	Flow (mL/Min.)	Temp. (Celsius)	pH (S.U.)	Cond. (mS/cm)	DO (mg/L)	ORP (mV)	Turb. (NTU)	Comments (Volume & Color)
1117	6.02	—	—	—	—	—	—	—	START PURGE
1127	7.32	130.0	14.21	6.15	0.536	0.95	+160	85	1300 V. Sl. Cloudy
1137	7.51	80.0	14.36	6.25	0.540	1.37	+157	75	2100 " " "
1147	7.81	100.0	14.39	6.27	0.544	1.54	+155	65	3100 " " "
1157	7.93	90.0	14.74	6.27	0.534	1.29	+148	55	4000 " " "
1207	8.30	90.0	15.06	6.19	0.544	1.60	+148	55	4900 " " "
1217	8.69	100.0	14.88	6.17	0.547	1.71	+147	55	5900 " " "
1227	9.08	100.0	15.01	6.15	0.553	1.47	+141	65	6900 " " "
1237	9.40	100.0	15.57	6.15	0.562	1.66	+143	70	7900 " " "
1247	9.70	90	15.06	6.13	0.562	1.50	+140	120	8800 Sl. Cloudy
1257	10.03	100	15.26	6.13	0.573	1.67	+145	180	9800 TANISH
1307	10.32	80	14.71	6.09	0.576	1.68	+147	390	10600 TAN
1317	10.58	80	14.48	6.00	0.590	1.70	+151	650	11400 TAN
	Note → Turbidity on the increase & water level								
	dropping rapidly - will pump to dryness								
1349	DRY	Removed an additional 12 L to dryness							23400 Orange BRN

SIGNATURE(S): [signature]

8.2 MIN VOL IN LITTERS

Tetra Tech NUS, Inc.

GROUNDWATER SAMPLE LOG SHEET

Project Site Name: NSWC CRANE
Project No.: N9060 CTO 0279

[] Domestic Well Data
[X] Monitoring Well Data
[] Other Well Type:
[] QA Sample Type:

Sample ID No.: 13GWT06 01
Sample Location: 13MWT06
Sampled By: T. Rolahn & B. Balkovec
C.O.C. No.: 0992, 0994, 0995
Type of Sample: 0996
[X] Low Concentration
[] High Concentration

SAMPLING DATA:

	Color	pH	S.C.	Temp.	Turbidity	DO	SALINITY	ORP
Date: 4/27/03	Visual	Standard	mS/cm	°C	NTU	mg/l	%	mV
Time: 0835								
Method: SAME	Lt Tan	6.63	0.495	12.46	650	3.15	—	+ 98

PURGE DATA:

	Volume	pH	S.C.	Temp. (C)	Turbidity	DO	SALINITY	ORP
Date: 4/26/03								
Method: Peristaltic								
Monitor Reading (ppm): –								
Well Casing Diameter & Material								
Type: 2" dia. PVC								
Total Well Depth (TD): 17.6	SEE LOW FLOW PURGE DATA SHEET							
Static Water Level (WL): 12.9								
One Casing Volume(gal/L): 3.1								
Start Purge (hrs): 0745								
End Purge (hrs): 0843								
Total Purge Time (min): 58								
Total Vol. Purged (gal/L): 6.2								

SAMPLE COLLECTION INFORMATION:

Analysis	Preservative	Container Requirements	Collected
VOCs 8260B	HCl / 4°C	(3) 40 mL Vials	No
VOCs 8015B	HCl / 4°C	(2) 40 mL Vials	
SVOCs (8270C)	4°C	(2) 1 L Amber	
SVOCs (SIM)	4°C	(2) 1 L Amber	
SVOCs (8151A)	4°C	(2) 1 L Amber	
Explosives (8330) WL 16.9	4°C	4/27/03 (1) ~~(2)~~ 1 L Amber	Yes
Total Metals (6020) & Total Hg (7470A)	HNO3 / 4°C	4/28/03 (1) 1 L HDPE @ 1748	Yes
Dissolved Metals (6020) & Dis. Hg (7470A)	HNO3/ 4°C	5/6/03 (1) 1 L HDPE @ 1735	Yes
Ammonia (350.1) & Nitrate (353.2)	H2SO4/ 4°C	5/7/03 (1) 1 L HDPE @ 1700	Yes

OBSERVATIONS / NOTES:

W.L. @ 4/27/03 @ 0834 Hrs = 16.65'

REPURGED WELL ON 5/5/03 to dry - Start Purge @ 1720 Hrs
END PURGE @ 1724; Vol. purged ~ 1.5 gal.

Circle if Applicable:

MS/MSD	Duplicate ID No.:
—	—

Signature(s): Ty Rolahn

TBD: To Be Determined

Tetra Tech NUS, Inc.

LOW FLOW PURGE DATA SHEET

PROJECT SITE NAME: NSWC CRANE
PROJECT NUMBER: N9060 CTO 0279

WELL ID.: 13MWT06
DATE: 4/26/03

Time (Hrs.)	Water Level (Ft. below TOC)	Flow (mL/Min.)	Temp. (Celsius)	pH (S.U.)	Cond. (mS/cm)	DO (mg/L)	ORP (mV)	Turb. (NTU)	Comments (Volume & Color)
0745	12.90	—	—	—	—	—	—	—	Start Purge
0755	13.78	100	11.66	6.40	0.481	2.29	+84	70	1000ml V. Sl. Cloudy
0805	14.36	90	11.68	6.54	0.471	2.98	+86	27	1900 CLEAR
0815	14.91	80	12.09	6.57	0.475	3.20	+87	24	2700 CLEAR
0825	15.46	80	12.76	6.60	0.488	3.30	+87	85	3500 CLOUDY
0835	16.63	110	12.46	6.63	0.495	3.15	+88	650	4600 it Tan
0843	~~Bailed~~ (M)	Turbidity on the increase & water level							6200 (JLY)
		dropping rapidly - will purge dry & sample later.							

SIGNATURE(S): [signature]

Tetra Tech NUS, Inc.

GROUNDWATER SAMPLE LOG SHEET

Project Site Name: NSWC CRANE
Project No.: N9060 CTO 0279

[] Domestic Well Data
[X] Monitoring Well Data
[] Other Well Type:
[] QA Sample Type:

Sample ID No.: 13GWT0701
Sample Location: 13MWT07
Sampled By: T. Roman
C.O.C. No.: 0992
Type of Sample:
[X] Low Concentration
[] High Concentration

SAMPLING DATA:

	Color	pH	S.C.	Temp.	Turbidity	DO	SALINITY	ORP
Date: 4/27/03	Visual	Standard	mS/cm	°C	NTU	mg/l	%	mV
Time: 1200								
Method: SAME	CLEAR	3.98	1.030	15.60	6.8	0.34	—	278

PURGE DATA:

Date: 4/27/03	Volume	pH	S.C.	Temp. (C)	Turbidity	DO	SALINITY	ORP
Method: Peristaltic								
Monitor Reading (ppm): —								
Well Casing Diameter & Material								
Type: 2" dia. PVC								
Total Well Depth (TD): 17.95	SEE LOW FLOW PURGE DATA SHEET							
Static Water Level (WL): 3.75								
One Casing Volume(gal/L): 8.9								
Start Purge (hrs): 1020								
End Purge (hrs): 1155								
Total Purge Time (min): 95								
Total Vol. Purged (gal/L): 9								

SAMPLE COLLECTION INFORMATION:

Analysis	Preservative	Container Requirements	Collected
VOCs 8260B	HCl / 4°C	(3) 40 mL Vials	No
VOCs 8015B	HCl / 4°C	(2) 40 mL Vials	
SVOCs (8270C)	4° C	(2) 1 L Amber	
SVOCs (SIM)	4° C	(2) 1 L Amber	
SVOCs (8151A)	4° C	(2) 1 L Amber	
Explosives (8330)	4° C	(2) 1 L Amber	Yes
Total Metals (6020) & Total Hg (7470A)	HNO3 / 4° C	(1) 1 L HDPE	Yes
Dissolved Metals (6020) & Dis. Hg (7470A)	HNO3/ 4° C	(1) 1 L HDPE	~~Yes~~
Ammonia (350.1) & Nitrate (353.2)	H2SO4/ 4° C	(1) 1 L HDPE	Yes

OBSERVATIONS / NOTES:

Circle if Applicable:

MS/MSD	Duplicate ID No.:
—	—

Signature(s): [illegible]

TBD: To Be Determined

Tetra Tech NUS, Inc.

LOW FLOW PURGE DATA SHEET

PROJECT SITE NAME: NSWC CRANE
PROJECT NUMBER: N9060 CTO 0279

WELL ID.: 13MWT07
DATE: 4/27/03

Time (Hrs.)	Water Level (Ft. below TOC)	Flow (mL/Min)	Temp. (Celsius)	pH (S.U.)	Cond. (mS/cm)	DO (mg/L)	ORP (mV)	Turb. (NTU)	Comments (Volume & Color)
1020	3.75	—	—	—	—	—	—	—	Start PURGE
1030	5.12	130	15.30	4.02	0.962	0.05	177	19	1300 ml CLEAR
1040	5.71	110	15.62	4.07	0.976	0.16	200	13	2400 ml "
1050	6.12	100	16.00	4.06	0.985	0.26	223	10	3400 ml "
1100	6.38	100	16.16	4.07	0.995	0.34	240	8.9	4400 ml "
1110	6.60	100	15.90	4.05	0.994	0.38	251	8.5	5400 ml "
1120	6.72	80	15.54	4.03	0.995	0.39	258	9.1	6200 ml "
1130	6.67	80	15.59	4.01	0.999	0.38	265	7.2	7000 ml "
1140	6.70	80	15.51	3.98	1.010	0.34	272	6.6	7800 ml "
1150	6.73	80	15.55	3.97	1.020	0.33	276	6.4	8600 ml "
1155	6.75	80	15.60	3.98	1.030	0.34	278	6.8	9000 ml "
1200	—	—	—	—	—	—	—	—	Start Sampling

SIGNATURE(S): [illegible]

Tetra Tech NUS, Inc.

GROUNDWATER SAMPLE LOG SHEET

Project Site Name: NSWC CRANE
Project No.: N9060 CTO 0279

[] Domestic Well Data
[X] Monitoring Well Data
[] Other Well Type:
[] QA Sample Type:

Sample ID No.: 13GWT0801
Sample Location: 13MWT03
Sampled By: T. ROJAHN
C.O.C. No.: 0992
Type of Sample:
[X] Low Concentration
[] High Concentration

SAMPLING DATA:

	Color	pH	S.C.	Temp.	Turbidity	DO	SALINITY	ORP
Date: 4/26/03	Visual	Standard	mS/cm	°C	NTU	mg/l	%	mV
Time: 1545								
Method: SAME	CLEAR	5.06	0.74	14.65	10	2.45	—	+206

PURGE DATA:

	Volume	pH	S.C.	Temp. (C)	Turbidity	DO	SALINITY	ORP
Date: 4/26/03								
Method: Peristaltic								
Monitor Reading (ppm): —								
Well Casing Diameter & Material								
Type: 2" dia. PVC								
Total Well Depth (TD): 17.50	SEE LOW FLOW PURGE DATA SHEET							
Static Water Level (WL): 3.32								
One Casing Volume(gal/L): 8.9								
Start Purge (hrs): 1412								
End Purge (hrs): 1542								
Total Purge Time (min): 90								
Total Vol. Purged (gal/L) 9								

SAMPLE COLLECTION INFORMATION:

Analysis	Preservative	Container Requirements	Collected
VOCs 8260B	HCl / 4°C	(3) 40 mL Vials	NO
VOCs 8015B	HCl / 4°C	(2) 40 mL Vials	↓
SVOCs (8270C)	4° C	(2) 1 L Amber	↓
SVOCs (SIM)	4° C	(2) 1 L Amber	↓
SVOCs (8151A)	4° C	(2) 1 L Amber	↓
Explosives (8330)	4° C	(2) 1 L Amber	Yes
Total Metals (6020) & Tolal Hg (7470A)	HNO3 / 4° C	(1) 1 L HDPE	Yes
Dissolved Metals (6020) & Dis. Hg (7470A)	HNO3/ 4° C	(1) 1 L HDPE	~~Yes~~ NO
Ammonia (350.1) & Nitrate (353.2)	H2SO4/ 4° C	(1) 1 L HDPE	Yes

OBSERVATIONS / NOTES:

Circle if Applicable:

MS/MSD	Duplicate ID No.:
—	—

Signature(s): T. Rojahn

TBD: To Be Determined

Tetra Tech NUS, Inc.

LOW FLOW PURGE DATA SHEET

PROJECT SITE NAME: NSWC CRANE
PROJECT NUMBER: N9060 CTO O279

WELL ID.: 13MWT08
DATE: 8/26/03

Time (Hrs.)	Water Level (Ft. below TOC)	Flow (mL/Min.)	Temp. (Celsius)	pH (S.U.)	Cond. (mS/cm)	DO (mg/L)	ORP (mV)	Turb. (NTU)	Comments (Volume & Color)
1412	3.32	–	–	–	–	–	–	–	START PURGE
1422	3.61	120	14.16	5.34	0.88	1.33	+163	170	1200 ml Cloudy
1432	3.66	80	14.77	5.35	0.80	2.00	+170	90	2000 V.Sl. Cloudy
1442	3.72	100	14.74	5.18	0.77	2.10	+182	32	3000 CLEAR
1452	3.80	100	14.78	5.14	0.76	2.08	+188	21	4000 "
1502	3.85	100	14.82	5.12	0.76	2.18	+193	15	5000 "
1512	3.89	100	14.81	5.10	0.74	2.30	+197	13	6000 "
1522	3.93	100	14.80	5.09	0.74	2.37	+202	12	7000 "
1532	3.97	100	14.77	5.07	0.74	2.41	+204	11	8000 "
1542	4.00	100	14.65	5.06	0.74	2.45	+206	10	9000 "
1545	–	–	–	–	–	–	–	–	SAMPLE TIME

SIGNATURE(S): Terry Rogers

8.9L = MIN VOL

Tetra Tech NUS, Inc.

GROUNDWATER SAMPLE LOG SHEET

Project Site Name: NSWC CRANE
Project No.: N9060 CTO 0279

[] Domestic Well Data
[X] Monitoring Well Data
[] Other Well Type:
[] QA Sample Type:

Sample ID No.: 13GWT09 01
Sample Location: 13MWT 04
Sampled By: A. Baumoel
C.O.C. No.: 0993
Type of Sample:
[X] Low Concentration
[] High Concentration

SAMPLING DATA:

	Color	pH	S.C.	Temp.	Turbidity	DO	SALINITY	ORP
Date: 4/28/03	Visual	Standard	mS/cm	°C	NTU	mg/l	%	mV
Time: 0911								
Method: PERSTALTIC	CLEAR	5.36	0.829	13.33	3.0	1.69	NA	+205.6

PURGE DATA:

	Volume	pH	S.C.	Temp. (C)	Turbidity	DO	SALINITY	ORP
Date: 4/28/03								
Method: PERSTALTIC								
Monitor Reading (ppm): —								
Well Casing Diameter & Material								
Type: 2" dia. PVC								
Total Well Depth (TD): 23.03	SEE LOW FLOW PURGE DATA SHEET							
Static Water Level (WL): 8.50								
One Casing Volume (gal/L): 2.4								
Start Purge (hrs): 0740								
End Purge (hrs): 0910								
Total Purge Time (min): 90								
Total Vol. Purged (gal/L): 9.3								

SAMPLE COLLECTION INFORMATION:

Analysis	Preservative	Container Requirements	Collected
VOCs 8260B	HCl / 4°C	2x (3) 40 mL Vials	YES
VOCs 8015B	HCl / 4°C	2x (2) 40 mL Vials	YES
SVOCs (8270C)	4° C	2x (2) 1 L Amber	YES
SVOCs (SIM)	4° C	2x (2) 1 L Amber	YES
SVOCs (8151A)	4° C	2x (2) 1 L Amber	YES
Explosives (8330)	4° C	2x (2) 1 L Amber	Yes
Total Metals (6020) & Total Hg (7470A)	HNO3 / 4° C	2x (1) 1 L HDPE	Yes
Dissolved Metals (6020) & Dis. Hg (7470A)	HNO3/ 4° C	(1) 1 L HDPE	~~Yes~~ NO
Ammonia (350.1) & Nitrate (353.2)	H2SO4/ 4° C	2x (1) 1 L HDPE	Yes

OBSERVATIONS / NOTES:

Circle if Applicable:

MS/MSD	Duplicate ID No.:
—	FD04280301

Signature(s): Robert Balkovec

TBD: To Be Determined

Tetra Tech NUS, Inc.

LOW FLOW PURGE DATA SHEET

PROJECT SITE NAME: NSWC CRANE
PROJECT NUMBER: N9060 CTO 0279

WELL ID.: 13MW704
DATE: 4/28/03

Time (Hrs.)	Water Level (Ft. below TOC)	Flow (mL/Min.)	Temp. (Celsius)	pH (S.U.)	Cond. (mS/cm)	DO (mg/L)	ORP (mV)	Turb. (NTU)	Comments (Volume & Color)
0740	8.50	START							CLOUDY
0745	8.80	130	12.84	5.47	0.808	2.57	+235.0	200	
0750	8.85	130	12.80	5.48	0.815	2.15	+219.7	110	1.3
0755	8.87	110	12.92	5.47	0.823	2.05	+197.8	65	—
0800	8.89	100							CLEANED OUT CELL 2.3
0805	8.88	100	12.71	5.49	0.821	1.93	+195.6	21	UNABLE TO SLOW RATE PUMP SHUTS OFF
0810	8.90	100	12.69	5.47	0.821	1.79	+194.4	17	CLEAR 3.3
0815	8.93	100	12.64	5.46	0.821	1.72	+194.9	16	—
0820	8.96	100	12.55	5.46	0.819	1.68	+196.0	9.3	4.3
0825	8.97	100	12.85	5.46	0.825	1.67	+195.7	9.3	—
0830	8.97	100	12.85	5.46	0.826	1.68	+196.3	7.1	5.3
0835	8.98	100	12.92	5.47	0.826	1.66	+197.6	5.2	—
0840	8.98	100	12.91	5.43	0.828	1.65	+198.9	5.0	6.3
0845	8.98	100	12.98	5.42	0.829	1.66	+200.0	4.6	—
0850	8.99	100	13.00	5.41	0.831	1.67	+200.7	2.7	7.3
0855	8.98	100	13.10	5.39	0.834	1.69	+202.0	2.2	—
0900	8.99	100	13.28	5.37	0.830	1.68	+204.1	4.0	8.3
0905	9.00	100	13.30	5.37	0.830	1.68	+204.7	3.4	—
0910	9.00	100	13.33	5.36	0.829	1.69	+205.6	3.0	7.1 9.3
→ END PURGE SAMPLED @ 0911									

SIGNATURE(S): Robert Bulkner 9L-1 vol.

Tetra Tech NUS, Inc.

GROUNDWATER SAMPLE LOG SHEET

Project Site Name: NSWC CRANE
Project No.: N9060 CTO 0279

[] Domestic Well Data
[X] Monitoring Well Data
[] Other Well Type:
[] QA Sample Type:

Sample ID No.: 13GWT0902
Sample Location: 13MWT09
Sampled By: T. ROJAHN
C.O.C. No.: 0989
Type of Sample:
[X] Low Concentration
[] High Concentration

SAMPLING DATA:

	Color	pH	S.C.	Temp.	Turbidity	DO	SALINITY	ORP
Date: 5/9/03	Visual	Standard	mS/cm	°C	NTU	mg/l	%	mV
Time: 1000								
Method: SAME	CLEAR	5.38	0.725	14.36	0.10	1.21	—	+ 148

PURGE DATA:

Date: 5/9/03	Volume	pH	S.C.	Temp. (C)	Turbidity	DO	SALINITY	ORP
Method: Peristaltic								
Monitor Reading (ppm): —								
Well Casing Diameter & Material								
Type: 2" dia. PVC								
Total Well Depth (TD): 23.03	SEE LOW FLOW PURGE DATA SHEET							
Static Water Level (WL): 7.47								
One Casing Volume(gal/L) 10								
Start Purge (hrs): 0818								
End Purge (hrs): 0958								
Total Purge Time (min): 100								
Total Vol. Purged (gal/L) 10.3								

SAMPLE COLLECTION INFORMATION:

Analysis	Preservative	Container Requirements	Collected
VOCs 8260B	HCl / 4°C	(3) 40 mL Vials	
VOCs 8015B	HCl / 4°C	(2) 40 mL Vials	
SVOCs (8270C)	4° C	2 X (2) 1 L Amber	Yes
SVOCs (SIM)	4° C	(2) 1 L Amber	
SVOCs (8151A)	4° C	(2) 1 L Amber	
Explosives (8330)	4° C	(2) 1 L Amber	Yes
Total Metals (6020) & Total Hg (7470A)	HNO3 / 4° C	(1) 1 L HDPE	Yes
Dissolved Metals (6020) & Dis. Hg (7470A)	HNO3/ 4° C	(1) 1 L HDPE	Yes
Ammonia (350.1) & Nitrate (353.2)	H2SO4/ 4° C	(1) 1 L HDPE	Yes

OBSERVATIONS / NOTES:

Circle if Applicable:

MS/MSD	Duplicate ID No.:
—	FD05090301

Signature(s): [signature]

TBD: To Be Determined

Tetra Tech NUS, Inc.

LOW FLOW PURGE DATA SHEET

PROJECT SITE NAME: NSWC CRANE
PROJECT NUMBER: N9060 CTO O279

WELL ID.: 13MW1T09
DATE: 5/9/03

Time (Hrs.)	Water Level (Ft. below TOC)	Flow (mL/Min.)	Temp. (Celsius)	pH (S.U.)	Cond. (mS/cm)	DO (mg/L)	ORP (mV)	Turb. (NTU)	Comments (Volume & Color)
0818	7.47	—	—	—	—	—	—	—	START PURGE
0828	7.84	120	14.62	5.55	0.732	1.54	131	2.1	1200 ml CLEAR
0838	7.87	110	14.87	5.49	0.743	1.45	132	0.35	2300 ml CLEAR
0848	7.91	100	14.93	5.48	0.745	1.34	134	0.10	3300 ml CLEAR
0858	7.95	100	14.99	5.47	0.747	1.23	135	0.10	4300 ml CLEAR
0908	7.98	100	14.82	5.45	0.743	1.24	137	0.35	5300 ml CLEAR
0918	8.00	100	14.70	5.45	0.738	1.24	138	1.00	6300 ml CLEAR
0928	8.02	100	14.61	5.43	0.737	1.27	140	0.60	7300 ml CLEAR
0938	8.04	100	14.43	5.40	0.731	1.24	143	0.10	8300 ml CLEAR
0948	8.05	100	14.40	5.39	0.727	1.22	146	0.10	9300 ml CLEAR
0958	8.07	100	14.36	5.38	0.725	1.21	148	0.10	10,300 ml CLEAR
1000	—	—	—	—	—	—	—	—	START SAMPLING

SIGNATURE(S): Terry Rogers

Tetra Tech NUS, Inc.

GROUNDWATER SAMPLE LOG SHEET

Project Site Name: NSWC CRANE
Project No.: N9060 CTO 0279

[] Domestic Well Data
[X] Monitoring Well Data
[] Other Well Type:
[] QA Sample Type:

Sample ID No.: 13GWT10 01
Sample Location: 13MWT10
Sampled By: D. BALKONEK
C.O.C. No.: 0993
Type of Sample:
[X] Low Concentration
[] High Concentration

SAMPLING DATA:

Date: 4/27/03	Color	pH	S.C.	Temp.	Turbidity	DO	SALINITY	ORP
Time: 1811	Visual	Standard	mS/cm	°C	NTU	mg/l	%	mV
Method: PERISTALTIC	CLEAR	3.01	0.582	15.60	10	1.40	NA	+364.0

PURGE DATA:

Date: 4/27/03	Volume	pH	S.C.	Temp. (C)	Turbidity	DO	SALINITY	ORP
Method: PERISTALTIC								
Monitor Reading (ppm): —								
Well Casing Diameter & Material								
Type: 2" dia. PVC								
Total Well Depth (TD): 28.13	SEE LOW FLOW PURGE DATA SHEET							
Static Water Level (WL): 15.30								
One Casing Volume (gal/L): 2.1								
Start Purge (hrs): 1602								
End Purge (hrs): 1810								
Total Purge Time (min): 128								
Total Vol. Purged (gal/L): 2.9								

SAMPLE COLLECTION INFORMATION:

Analysis	Preservative	Container Requirements	Collected
VOCs 8260B	HCl / 4°C	(3) 40 mL Vials	NO
VOCs 8015B	HCl / 4°C	(2) 40 mL Vials	
SVOCs (8270C)	4°C	(2) 1 L Amber	
SVOCs (SIM)	4°C	(2) 1 L Amber	
SVOCs (8151A)	4°C	(2) 1 L Amber	
Explosives (8330)	4°C	(2) 1 L Amber	Yes
Total Metals (6020) & Total Hg (7470A)	HNO3 / 4°C	(1) 1 L HDPE	Yes
Dissolved Metals (6020) & Dis. Hg (7470A)	HNO3/ 4°C	(1) 1 L HDPE	~~Yes~~ NO
Ammonia (350.1) & Nitrate (353.2)	H2SO4/ 4°C	(1) 1 L HDPE	Yes

OBSERVATIONS / NOTES:

Circle if Applicable:

MS/MSD	Duplicate ID No.:
—	—

Signature(s): Robert Balkonek

TBD: To Be Determined

Tetra Tech NUS, Inc.

LOW FLOW PURGE DATA SHEET

PROJECT SITE NAME: NSWC CRANE
PROJECT NUMBER: N9060 CTO 0279

WELL ID.: 13MW710
DATE: 4/27/03

Time (Hrs.)	Water Level (Ft. below TOC)	Flow (mL/Min.)	Temp. (Celsius)	pH (S.U.)	Cond. (mS/cm)	DO (mg/L)	ORP (mV)	Turb. (NTU)	Comments (Volume & Color)	Vol.
1602	15.30	START							~~CLEAR~~ CLOUDY	
1605	15.82	120	16.79	3.43	0.596	3.16	+343.7	160		
1610	16.15	120	15.83	3.33	0.583	2.03	+352.0	80	HAZY	1.2L
1615	16.48	80	15.90	3.31	0.584	1.88	+352.7	28	UNABLE TO SLOW RATE DOWN	
1620	16.85	80	15.90	3.29	0.582	1.80	+352.6	28		2L
1625	17.13	80	15.93	3.27	0.582	1.75	+352.0	31		—
1630	17.38	80	15.80	3.25	0.581	1.72	+350.9	31		2.8L
1640	17.78	80	15.81	3.23	0.579	1.64	+347.3	28		3.6L
1650	18.52	80	15.74	3.20	0.577	1.58	+344.6	28		4.4L
1700	18.85	80	15.68	3.18	0.574	1.53	+342.0	23	1HR.	5.2L
1710	19.20	80	15.52	3.16	0.574	1.29	+340.8	17		6.0L
1720	19.54	80	15.45	3.09	0.572	1.26	+342.1	15		6.8L
1730	19.84	80	15.50	3.09	0.575	1.25	+345.6	13		7.6L
1740	20.15	80	15.59	3.05	0.579	1.29	+352.4	13	1 vol.	8.4L
1750	20.40	80	15.61	3.04	0.582	1.32	+358.0	12		9.2L
1800	20.64	80	15.64	3.02	0.583	1.39	+361.7	10	2HR	10.0L
1810	20.88	80	15.60	3.01	0.582	1.40	+364.0	10		10.8L
	→ END PURGE									
	SAMPLED 1811									

1715

SIGNATURE(S): Robert Belkner

8L = 1 vol. 28.13 70.

140

Tetra Tech NUS, Inc.

GROUNDWATER SAMPLE LOG SHEET

Project Site Name: NSWC CRANE
Project No.: N9060 CTO 0279

[] Domestic Well Data
[X] Monitoring Well Data
[] Other Well Type:
[] QA Sample Type:

Sample ID No.: 13GWT11 01
Sample Location: 13MWT11
Sampled By: B Balkovec
C.O.C. No.: 0992
Type of Sample:
[X] Low Concentration
[] High Concentration

SAMPLING DATA:

	Color Visual	pH Standard	S.C. mS/cm	Temp. °C	Turbidity NTU	DO mg/l	SALINITY %	ORP mV
Date: 4/27/03								
Time: 1506								
Method: Peristaltic	CLEAR	3.64	0.251	15.73	40	0.85	NA	+265.0

PURGE DATA:

	Volume	pH	S.C.	Temp. (C)	Turbidity	DO	SALINITY	ORP
Date: 4/27/03								
Method: Peristaltic								
Monitor Reading (ppm): —								
Well Casing Diameter & Material								
Type: 2" dia. PVC								
Total Well Depth (TD): 17.75	SEE LOW FLOW PURGE DATA SHEET							
Static Water Level (WL): 9.47								
One Casing Volume (gal/L): 1.3								
Start Purge (hrs): 1245								
End Purge (hrs): 1505								
Total Purge Time (min): 140								
Total Vol. Purged (gal/L): 3.25								

SAMPLE COLLECTION INFORMATION:

Analysis	Preservative	Container Requirements	Collected
VOCs 8260B	HCl / 4°C	(3) 40 mL Vials	NO
VOCs 8015B	HCl / 4°C	(2) 40 mL Vials	
SVOCs (8270C)	4°C	(2) 1 L Amber	
SVOCs (SIM)	4°C	(2) 1 L Amber	
SVOCs (8151A)	4°C	(2) 1 L Amber	
Explosives (8330)	4°C	(2) 1 L Amber	Yes
Total Metals (6020) & Total Hg (7470A)	HNO3 / 4°C	(1) 1 L HDPE	Yes
Dissolved Metals (6020) & Dis. Hg (7470A)	HNO3/ 4°C	(1) 1 L HDPE	~~Yes~~ NO
Ammonia (350.1) & Nitrate (353.2)	H2SO4/ 4°C	(1) 1 L HDPE	Yes

OBSERVATIONS / NOTES:

Circle if Applicable:

MS/MSD	Duplicate ID No.:
—	—

Signature(s): Robert Balkovec

TBD: To Be Determined

Tetra Tech NUS, Inc.

LOW FLOW PURGE DATA SHEET

PROJECT SITE NAME: NSWC CRANE
PROJECT NUMBER: N9060 CTO 0279

WELL ID.: 13MW711
DATE: 4/27/03

Time (Hrs.)	Water Level (Ft. below TOC)	Flow (mL/Min.)	Temp. (Celsius)	pH (S.U.)	Cond. (mS/cm)	DO (mg/L)	ORP (mV)	Turb. (NTU)	Comments (Volume & Color)	WL
1245	9.47	START							HAZY BROWN	—
1250	9.51	125	15.72	3.88	0.251	1.45	+233.7	>999		—
1255	9.56	125	15.14	3.83	0.245	1.00	+241.1	450		1.25 L
1300	9.61	110	15.19	3.81	0.244	0.89	+246.8	350	CLEANED OUT CELL	1.9 L
1305	9.64	100	15.09	3.82	0.243	1.08	+249.3	300		—
1310	9.66	100	15.26	3.80	0.244	0.90	+250.5	260		2.4 L
1315	9.69	90	15.39	3.80	0.245	0.87	+250.7	230	CLEAR.	2.35 L
1320	9.71	90	15.34	3.78	0.245	0.84	+252.4	200		—
1325	9.72	90	15.42	3.78	0.246	0.82	+253.3	180		3.25 L
1330	9.71	90	15.67	3.78	0.244	0.82	+255.7	130	CLEANED OUT CELL BRI.	—
1335	9.72	90							STABLE WL.	4.15 L
1340	9.72	90	15.86	3.85	0.252	1.12	+256.6	120		—
1345	9.73	90	15.91	3.79	0.252	0.98	+256.9	100	3 1 vol 1 HR.	5.05 L
1355	9.73	90	16.06	3.78	0.253	0.91	+260.2	70		5.95 L
1405	9.74	90	15.83	3.75	0.252	0.89	+261.7	45		≈ 6.9 L
1415	9.75	90	15.89	3.74	0.252	0.85	+262.4	30		7.8 L
1425	9.76	90	15.93	3.74	0.252	0.85	+262.8	27		8.7 L
1435	9.76	90	15.80	3.73	0.252	0.87	+263.0	17		9.6 L
1445	9.77	90	15.75	3.70	0.251	0.86	+264.8	12	2 HRS. 2 vols.	10.5 L
1455	9.77	90	15.72	3.64	0.251	0.86	+264.6	10		11.4 L
1505	9.78	90	15.73	3.64	0.251	0.85	+265.0	10		12.3 L
→ END PURGE										
SAMPLED @	1506									

SIGNATURE(S): Robert Belknap 5.1 L

Tetra Tech NUS, Inc.

GROUNDWATER SAMPLE LOG SHEET

Project Site Name: NSWC CRANE
Project No.: N9060 CTO 0279

[] Domestic Well Data
[X] Monitoring Well Data
[] Other Well Type:
[] QA Sample Type:

Sample ID No.: 13GWT12 01 & F
Sample Location: 13MWT12
Sampled By: T. Rosahn
C.O.C. No.: 0992 & 0993
Type of Sample:
[X] Low Concentration
[] High Concentration

SAMPLING DATA:

	Color	pH	S.C.	Temp.	Turbidity	DO	SALINITY	ORP
Date: 4/27/03	Visual	Standard	mS/cm	°C	NTU	mg/l	%	mV
Time: 1710								
Method: Peristaltic	V.Sl. Cloudy	4.83	0.135	14.46	60	2.35	—	+242

PURGE DATA:

Date: 4/27/03	Volume	pH	S.C.	Temp. (C)	Turbidity	DO	SALINITY	ORP
Method: SAME								
Monitor Reading (ppm): —								
Well Casing Diameter & Material								
Type: 2" dia. PVC								
Total Well Depth (TD): 22.40	SEE LOW FLOW PURGE DATA SHEET							
Static Water Level (WL): 8.50								
One Casing Volume(gal/L) 8.7								
Start Purge (hrs): 1305								
End Purge (hrs): 1705								
Total Purge Time (min): 240								
Total Vol. Purged (gal/L) 21.5								

SAMPLE COLLECTION INFORMATION:

Analysis	Preservative	Container Requirements	Collected
VOCs 8260B	HCl / 4°C	(3) 40 mL Vials	NO
VOCs 8015B	HCl / 4°C	(2) 40 mL Vials	
SVOCs (8270C)	4° C	(2) 1 L Amber	
SVOCs (SIM)	4° C	(2) 1 L Amber	
SVOCs (8151A)	4° C	(2) 1 L Amber	
Explosives (8330)	4° C	(2) 1 L Amber	Yes
Total Metals (6020) & Total Hg (7470A)	HNO3 / 4° C	(1) 1 L HDPE	Yes
Dissolved Metals (6020) & Dis. Hg (7470A)	HNO3/ 4° C	(1) 1 L HDPE	Yes
Ammonia (350.1) & Nitrate (353.2)	H2SO4/ 4° C	(1) 1 L HDPE	Yes

OBSERVATIONS / NOTES:

Circle if Applicable:

MS/MSD — Duplicate ID No.: —

Signature(s): [signature]

TBD: To Be Determined

Tetra Tech NUS, Inc.

LOW FLOW PURGE DATA SHEET

PROJECT SITE NAME: NSWC CRANE
PROJECT NUMBER: N9060 CTO 0279

WELL ID.: 13MWT12
DATE: 4/27/03

Time (Hrs.)	Water Level (Ft. below TOC)	Flow (mL/Min.)	Temp. (Celsius)	pH (S.U.)	Cond. (mS/cm)	DO (mg/L)	ORP (mV)	Turb. (NTU)	Comments (Volume & Color)
1305	8.50	—	—	—	—	—	—	—	Start Purge
1315	8.65	100	16.04	4.76	0.137	0.22	+200	25	1000 ml Clear
1325	10.80	110	15.63	4.74	0.135	0.33	205	7.7	2100 ml "
1335	11.64	100	16.04	4.75	0.136	0.49	206	6.9	3100 ml "
1345	12.13	90	17.19	4.75	0.141	0.62	206	16	4000 ml "
1355	12.76	90	16.48	4.77	0.138	0.69	208	14	4900 ml "
1405	13.05	90	16.33	4.81	0.137	0.73	207	12	5800 ml "
1415	13.28	90	16.38	4.77	0.137	0.75	207	16	6700 ml "
1425	13.52	90	16.63	4.78	0.137	0.52	205	23	7600 ml "
1435	13.83	90	16.41	4.72	0.137	0.68	210	31	8500 ml "
1445	14.10	90	16.65	4.74	0.140	0.82	211	45	9400 ml "
1455	14.33	90	15.77	4.76	0.138	0.94	212	50	10300 ml "
1505	14.65	90	15.31	4.71	0.136	0.89	215	45	11200 ml "
1515	14.95	90	14.67	4.76	0.136	0.99	214	60	12100 ml V. Sl Cloudy
1525	15.23	90	14.99	4.80	0.141	1.33	215	70	13000 ml " " "
1535	15.47	85	14.71	4.89	0.144	1.58	217	75	13850 ml " " "
1545	15.71	85	14.82	4.91	0.147	1.79	220	85	14700 ml " " "
1555	15.95	85	14.59	4.92	0.148	1.97	223	90	15550 ml Sl. Cloudy
1605	16.21	85	14.60	4.91	0.149	2.16	226	95	16400 ml " "
1615	16.43	85	14.63	4.92	0.148	2.29	229	95	17250 ml " "
1625	16.67	85	14.58	4.90	0.146	2.32	232	90	18100 ml " "
1635	16.86	85	14.61	4.89	0.145	2.32	234	90	18950 ml " "
1645	17.10	85	14.49	4.87	0.142	2.29	239	80	19800 ml V. " "
1655	17.33	85	14.62	4.83	0.138	2.36	241	65	20650 ml " " "
1705	17.56	85	14.46	4.83	0.135	2.35	242	60	21500 ml
1710	—	—	—	—	—	—	—	—	Sample Time

SIGNATURE(S): Terry Kopek

Tetra Tech NUS, Inc.

GROUNDWATER SAMPLE LOG SHEET

Project Site Name: NSWC CRANE
Project No.: N9060 CTO 0279

[] Domestic Well Data
[X] Monitoring Well Data
[] Other Well Type:
[] QA Sample Type:

Sample ID No.: 13GWT 13 01
Sample Location: 13MWT 13
Sampled By: B. BALKWILL
C.O.C. No.: 0995
Type of Sample:
[X] Low Concentration
[] High Concentration

SAMPLING DATA:

Date: 5/7/03	Color	pH	S.C.	Temp.	Turbidity	DO	SALINITY	ORP
Time: 0947	Visual	Standard	mS/cm	°C	NTU	mg/l	%	mV
Method: PEDISTALTIC	CLEAR	4.20	0.106	13.82	5.8	3.37	NA	-268.2

PURGE DATA:

Date: 5/7/03	Volume	pH	S.C.	Temp. (C)	Turbidity	DO	SALINITY	ORP
Method: PEDISTALTIC								
Monitor Reading (ppm): —								
Well Casing Diameter & Material								
Type: 2" dia. PVC								
Total Well Depth (TD): 21.44	SEE LOW FLOW PURGE DATA SHEET							
Static Water Level (WL): 3.83								
One Casing Volume (gal/L): 2.9								
Start Purge (hrs): 0730								
End Purge (hrs): 0945								
Total Purge Time (min): 135								
Total Vol. Purged (gal/L): 3.4								

SAMPLE COLLECTION INFORMATION:

Analysis	Preservative		Container Requirements	Collected
VOCs 8260B	HCl / 4°C		(3) 40 mL Vials	NO
VOCs 8015B	HCl / 4°C		(2) 40 mL Vials	
SVOCs (8270C)	4° C		(2) 1 L Amber	
SVOCs (SIM)	4° C		(2) 1 L Amber	
SVOCs (8151A)	4° C		(2) 1 L Amber	
Explosives (8330)	4° C	2x	(2) 1 L Amber	Yes
Total Metals (6020) & Total Hg (7470A)	HNO3 / 4° C	2x	(1) 1 L HDPE	Yes
Dissolved Metals (6020) & Dis. Hg (7470A)	HNO3/ 4° C		(1) 1 L HDPE	~~Yes~~ NO
Ammonia (350.1) & Nitrate (353.2)	H2SO4/ 4° C	2x	(1) 1 L HDPE	Yes

OBSERVATIONS / NOTES:

Circle if Applicable:

MS/MSD	Duplicate ID No.:
—	FD05070301

Signature(s): Robert Balkwill

TBD: To Be Determined

Tetra Tech NUS, Inc.

LOW FLOW PURGE DATA SHEET

PROJECT SITE NAME: NSWC CRANE
PROJECT NUMBER: N9060 CTO O279

WELL ID.: 13MW713
DATE: 5/7/03

Time (Hrs.)	Water Level (Ft. below TOC)	Flow (mL/Min.)	Temp. (Celsius)	pH (S.U.)	Cond. (mS/cm)	DO (mg/L)	ORP (mV)	Turb. (NTU)	Comments (Volume & Color)
0730	3.83	START							CLOUDY
0735	3.99	120	14.32	4.29	0.126	5.11	+228.7	230	.6
0740	4.03	95	14.00	4.24	0.100	4.45	+246.6	140	2 1.1 L
0745	4.06	95	13.69	4.21	0.096	4.28	+259.1	85	HAZY 1.55 L
0750	4.05	95	13.78	4.21	0.095	4.16	+262.9	75	2.03 L
0800	4.05	95	13.81	4.22	0.095	4.05	+263.0	75	2.48 L
0810	4.08	95	13.66	4.21	0.096	3.96	+264.4	55	—
0820	4.08	95	13.66	4.22	0.096	3.84	+263.1	50	4.88 L
0830	4.08	95	13.65	4.23	0.097	3.79	+261.5	40	—
0840	4.09	95	13.56	4.23	0.097	3.69	+260.3	31	6.78 L
0850	4.09	95	13.62	4.22	0.099	3.67	+262.3	22	—
0900	4.10	95	13.60	4.21	0.100	3.58	+263.4	19	8.68 L
0910	4.10	95	13.80	4.21	0.102	3.47	+264.5	14	—
0920	4.10	95	13.72	4.20	0.104	3.44	+265.4	12	10.58 L
0930	4.10	95	13.76	4.21	0.105	3.41	+266.1	11	2 hrs —
0940	4.10	95	13.80	4.20	0.106	3.39	+267.0	8.4	> 12 vol. 12.48 L
0945	4.10	95	13.82	4.20	0.106	3.37	+268.2	5.8	12.96 L
	→ END PURGE								
	SAMPLED @	0947							

SIGNATURE(S): Robert Bellhouse

10.8 L > 12 vol

Tetra Tech NUS, Inc.

GROUNDWATER SAMPLE LOG SHEET

Project Site Name: NSWC CRANE
Project No.: N9060 CTO 0279

[] Domestic Well Data
[X] Monitoring Well Data
[] Other Well Type:
[] QA Sample Type:

Sample ID No.: 13GWT14 01
Sample Location: 13MWT14
Sampled By: B. BALKOVEC
C.O.C. No.: 0994
Type of Sample:
[X] Low Concentration
[] High Concentration

SAMPLING DATA:

	Color Visual	pH Standard	S.C. mS/cm	Temp. °C	Turbidity NTU	DO mg/l	SALINITY %	ORP mV
Date: 4/29/03								
Time: 0926								
Method: PERISTALTIC	CLEAR	5.50	0.885	14.34	1.6	1.20	NA	+23.2

PURGE DATA:

	Volume	pH	S.C.	Temp. (C)	Turbidity	DO	SALINITY	ORP
Date: 4/29/03								
Method: PERISTALTIC								
Monitor Reading (ppm): —								
Well Casing Diameter & Material								
Type: 2" dia. PVC								
Total Well Depth (TD): 25.60	SEE LOW FLOW PURGE DATA SHEET							
Static Water Level (WL): 13.81								
One Casing Volume (gal/L): 1.9								
Start Purge (hrs): 0755								
End Purge (hrs): 0925								
Total Purge Time (min): 90								
Total Vol. Purged (gal/L): 2								

SAMPLE COLLECTION INFORMATION:

Analysis	Preservative	Container Requirements	Collected
VOCs 8260B	HCl / 4°C	(3) 40 mL Vials	No
VOCs 8015B	HCl / 4°C	(2) 40 mL Vials	
SVOCs (8270C)	4°C	(2) 1 L Amber	
SVOCs (SIM)	4°C	(2) 1 L Amber	
SVOCs (8151A)	4°C	(2) 1 L Amber	
Explosives (8330)	4°C	(2) 1 L Amber	Yes
Total Metals (6020) & Total Hg (7470A)	HNO3 / 4°C	(1) 1 L HDPE	Yes
Dissolved Metals (6020) & Dis. Hg (7470A)	HNO3/ 4°C	(1) 1 L HDPE	~~Yes~~ No
Ammonia (350.1) & Nitrate (353.2)	H2SO4/ 4°C	(1) 1 L HDPE	Yes

OBSERVATIONS / NOTES:

Circle if Applicable:

MS/MSD	Duplicate ID No.:
—	—

Signature(s): Robert Balkovec

TBD: To Be Determined

Tetra Tech NUS, Inc.

LOW FLOW PURGE DATA SHEET

PROJECT SITE NAME: NSWC CRANE
PROJECT NUMBER: N9060 CTO 0279

WELL ID.: 13MW714
DATE: 4/29/03

Time (Hrs.)	Water Level (Ft. below TOC)	Flow (mL/Min.)	Temp. (Celsius)	pH (S.U.)	Cond. (mS/cm)	DO (mg/L)	ORP (mV)	Turb. (NTU)	Comments (Volume & Color)
0755	13.81	START							
0800	14.00	110	13.80	5.73	0.928	3.57	+74.7	11	CLEAR.
0805	14.00	110	13.77	5.69	0.926	2.31	+58.6	12	1.1L
0810	14.02	80	13.57	5.68	0.900	1.95	+49.3	10	
0815	14.03	80	13.64	5.68	0.840	1.81	+45.4	9.7	1.4
0820	14.05	80	13.66	5.67	0.835	1.72	+36.7	8.4	UNABLE TO PUMP SLOWER THAN 80 ml/min
0825	14.06	80	13.71	5.67	0.830	1.60	+32.4	7.2	2.7
0830	14.07	80	13.78	5.66	0.822	1.53	+31.5	8.4	—
0835	14.07	80	13.80	5.65	0.787	1.36	+28.0	6.1	3.5
0840	14.08	80	13.92	5.63	0.783	1.28	+27.6	6.9	—
0845	14.07	80	13.99	5.63	0.766	1.26	+26.5	5.0	4.3
0850	14.08	80	13.98	5.61	0.850	1.20	+24.1	4.8	—
0855	14.08	80	13.96	5.60	0.919	1.11	+23.3	4.4	5.1
0900	14.09	80	14.11	5.60	0.907	1.09	+23.6	4.5	—
0905	14.10	80	14.20	5.58	0.896	1.21	+23.4	3.6	5.9
0910	14.10	80	14.21	5.56	0.890	1.15	+23.0	2.7	—
0915	14.10	80	14.30	5.53	0.888	1.16	+23.0	2.5	6.7
0920	14.10	80	14.30	5.51	0.886	1.17	+23.1	1.8	—
0925	14.11	80	14.34	5.50	0.885	1.20	+23.2	1.6	>1 vol. 7.5
	→ END PURGE								
	SAMPLED @	0926							

SIGNATURE(S): Robert Balhuree

7.2L = 1 vol.

Tetra Tech NUS, Inc.

GROUNDWATER SAMPLE LOG SHEET

Project Site Name: NSWC CRANE
Project No.: N9060 CTO 0279

[] Domestic Well Data
[X] Monitoring Well Data
[] Other Well Type:
[] QA Sample Type:

Sample ID No.: 13GWT15 01
Sample Location: 13MWT 15
Sampled By: B. BALKOVEC
C.O.C. No.: 0895
Type of Sample:
[X] Low Concentration
[] High Concentration

SAMPLING DATA:

Date: 5/6/03	Color	pH	S.C.	Temp.	Turbidity	DO	SALINITY	ORP
Time: 1702	Visual	Standard	mS/cm	°C	NTU	mg/l	%	mV
Method: Peristaltic	CLEAR	3.74	0.341	15.89	7.3	0.53	NA	+286.8

PURGE DATA:

Date: 5/6/03	Volume	pH	S.C.	Temp. (C)	Turbidity	DO	SALINITY	ORP
Method: Peristaltic								
Monitor Reading (ppm): —								
Well Casing Diameter & Material								
Type: 2" dia. PVC								
Total Well Depth (TD): 27.87	SEE LOW FLOW PURGE DATA SHEET							
Static Water Level (WL): 13.07								
One Casing Volume (gal/L): 2.4								
Start Purge (hrs): 1445								
End Purge (hrs): 1700								
Total Purge Time (min): 135								
Total Vol. Purged (gal/L): 9.1								

SAMPLE COLLECTION INFORMATION:

Analysis	Preservative	Container Requirements	Collected
VOCs 8260B	HCl / 4°C	(3) 40 mL Vials	NO
VOCs 8015B	HCl / 4°C	(2) 40 mL Vials	
SVOCs (8270C)	4° C	(2) 1 L Amber	
SVOCs (SIM)	4° C	(2) 1 L Amber	
SVOCs (8151A)	4° C	(2) 1 L Amber	
Explosives (8330)	4° C	(2) 1 L Amber	Yes
Total Metals (6020) & Total Hg (7470A)	HNO3 / 4° C	(1) 1 L HDPE	Yes
Dissolved Metals (6020) & Dis. Hg (7470A)	HNO3/ 4° C	(1) 1 L HDPE	~~Yes~~ NO
Ammonia (350.1) & Nitrate (353.2)	H2SO4/ 4° C	(1) 1 L HDPE	Yes

OBSERVATIONS / NOTES:

1456'

Circle if Applicable:

MS/MSD	Duplicate ID No.:

Signature(s): Robert Balkovec

TBD: To Be Determined

Tetra Tech NUS, Inc.

LOW FLOW PURGE DATA SHEET

PROJECT SITE NAME: NSWC CRANE
PROJECT NUMBER: N9060 CTO 0279

WELL ID.: 13MWT15
DATE: 5/6/03

Time (Hrs.)	Water Level (Ft. below TOC)	Flow (mL/Min.)	Temp. (Celsius)	pH (S.U.)	Cond. (mS/cm)	DO (mg/L)	ORP (mV)	Turb. (NTU)	Comments (Volume & Color)
1445	13.07	START							HAZY —
1450	13.70	100	17.21	3.53	0.458	1.83	+342.8	50	.5L
1455	14.18	80	16.70	3.35	0.443	1.37	+381.9	40	.9L
1500	14.46	75	16.64	3.32	0.442	1.30	+386.1	40	UNABLE TO LOWER RATE —
1505	14.72	75	16.56	3.30	0.442	1.26	+388.3	39	1.65L
1515	15.20	75	16.20	3.30	0.438	1.00	+371.4	36	2.4
1525	15.60	75	16.07	3.33	0.433	0.68	+350.7	32	—
1535	15.91	75	15.90	3.37	0.430	0.66	+341.8	30	3.9
1545	16.26	75	15.77	3.44	0.426	0.61	+324.6	30	—
1555	16.54	75	15.89	3.52	0.423	0.58	+312.5	24	5.4
1605	16.72	75	15.80	3.57	0.416	0.58	+304.8	23	—
1615	16.81	75	15.79	3.60	0.411	0.55	+300.0	21	6.9
1625	16.86	75	15.91	3.63	0.407	0.54	+298.1	18	—
1635	16.93	75	16.00	3.67	0.405	0.53	+294.6	14	8.4
1645	16.94	75	15.92	3.71	0.397	0.53	+291.2	11	2HRS —
1655	16.96	75	15.84	3.73	0.393	0.53	+288.7	8.7	7 Vol 9.9 L
1700	16.97	75	15.89	3.74	0.391	0.53	+286.8	7.3	
	→ END PURGE								
	SAMPLING	1702							

SIGNATURE(S): Robert Balkovec

9.1 L: Vol.

Tetra Tech NUS, Inc.

GROUNDWATER SAMPLE LOG SHEET

Project Site Name: NSWC CRANE
Project No.: N9060 CTO 0279

[] Domestic Well Data
[X] Monitoring Well Data
[] Other Well Type:
[] QA Sample Type:

Sample ID No.: 13GWT16 01
Sample Location: 13MWT16
Sampled By: B. BAUCOVEC
C.O.C. No.: 0995
Type of Sample:
[X] Low Concentration
[] High Concentration

SAMPLING DATA:

Date: 5/6/03	Color	pH	S.C.	Temp.	Turbidity	DO	SALINITY	ORP
Time: 0842	Visual	Standard	mS/cm	°C	NTU	mg/l	%	mV
Method: SAME	CLEAR	6.46	0.356	14.27	2.7	0.81	NA	-30.4

PURGE DATA:

Date: 5/6/03	Volume	pH	S.C.	Temp. (C)	Turbidity	DO	SALINITY	ORP
Method: PERISTALTIC								
Monitor Reading (ppm): —								
Well Casing Diameter & Material								
Type: 2" dia. PVC								
Total Well Depth (TD): 17.31	SEE LOW FLOW PURGE DATA SHEET							
Static Water Level (WL): 9.81								
One Casing Volume (gal/L): 1.2								
Start Purge (hrs): 0748								
End Purge (hrs): 0840								
Total Purge Time (min): 52								
Total Vol. Purged (gal/L): 1.3								

SAMPLE COLLECTION INFORMATION:

Analysis	Preservative	Container Requirements	Collected
VOCs 8260B	HCl / 4°C	(3) 40 mL Vials	NO
VOCs 8015B	HCl / 4°C	(2) 40 mL Vials	
SVOCs (8270C)	4° C	(2) 1 L Amber	
SVOCs (SIM)	4° C	(2) 1 L Amber	
SVOCs (8151A)	4° C	(2) 1 L Amber	
Explosives (8330)	4° C	(2) 1 L Amber	Yes
Total Metals (6020) & Total Hg (7470A)	HNO3 / 4° C	(1) 1 L HDPE	Yes
Dissolved Metals (6020) & Dis. Hg (7470A)	HNO3/ 4° C	(1) 1 L HDPE	~~Yes~~ NO
Ammonia (350.1) & Nitrate (353.2)	H2SO4/ 4° C	(1) 1 L HDPE	Yes

OBSERVATIONS / NOTES:

Circle if Applicable:

MS/MSD	Duplicate ID No.:
—	—

Signature(s): Robert Balkovec

TBD: To Be Determined

Tetra Tech NUS, Inc.

LOW FLOW PURGE DATA SHEET

PROJECT SITE NAME: NSWC CRANE
PROJECT NUMBER: N9060 CTO 0279

WELL ID.: 13MW716
DATE: 5/6/03

Time (Hrs.)	Water Level (Ft. below TOC)	Flow (mL/Min.)	Temp. (Celsius)	pH (S.U.)	Cond. (mS/cm)	DO (mg/L)	ORP (mV)	Turb. (NTU)	Comments (Volume & Color)	Vol.
0748	9.81	START							CLEAR	—
0755	10.21	120	14.22	6.31	0.381	1.20	-53.7	8.1		.84L
0800	10.44	100	14.25	6.20	0.370	1.24	-51.0	6.7		1.34L
0805	10.71	90	14.26	6.17	0.363	1.06	-46.4	4.5		1.8L
0810	10.85	85	14.12	6.17	0.360	0.99	-44.0	5.5	UNABLE TO LOWER PUMP RATE	—
0815	10.97	85	14.29	6.18	0.360	0.97	-42.2	5.7		2.65L
0820	11.18	85	14.19	6.17	0.360	0.90	-41.4	6.2		-
0825	11.39	85	14.30	6.17	0.360	0.87	-38.6	3.8		3.5L
0830	11.44	85	14.20	6.17	0.358	0.86	-36.1	3.6		-
0835	11.51	85	14.31	6.17	0.357	0.84	-34.2	3.0		4.35L
0840	11.67	85	14.27	6.16	0.356	0.81	-30.4	2.7	7 1/2 gal	4.8L
	→ END PURGE									
	SAMPLED @	0842								

SIGNATURE(S): Robert Balkwill

4 6L = 1 gal

12.31 gal

Tetra Tech NUS, Inc.

GROUNDWATER SAMPLE LOG SHEET

Project Site Name: NSWC CRANE
Project No.: N9060 CTO 0279

[] Domestic Well Data
[X] Monitoring Well Data
[] Other Well Type:
[] QA Sample Type:

Sample ID No.: 13GWT17 01
Sample Location: 13MWT17
Sampled By: T. ROJAHN
C.O.C. No.: 0995
Type of Sample:
[X] Low Concentration
[] High Concentration

SAMPLING DATA:

	Color	pH	S.C.	Temp.	Turbidity	DO	SALINITY	ORP
Date: 5/7/03	Visual	Standard	mS/cm	°C	NTU	mg/l	%	mV
Time: 1022								
Method: SAME	CLEAR	5.35	0.170	15.70	10	0.53	--	112

PURGE DATA:

	Volume	pH	S.C.	Temp. (C)	Turbidity	DO	SALINITY	ORP
Date: 5/7/03								
Method: Peristaltic								
Monitor Reading (ppm): –								
Well Casing Diameter & Material								
Type: 2" dia. PVC								
Total Well Depth (TD): 20.30	SEE LOW FLOW PURGE DATA SHEET							
Static Water Level (WL): 9.00								
One Casing Volume(gal/L) 7								
Start Purge (hrs): 0750								
End Purge (hrs): 1020								
Total Purge Time (min): 150								
Total Vol. Purged (gal/L) 15.2								

SAMPLE COLLECTION INFORMATION:

Analysis	Preservative	Container Requirements	Collected
VOCs 8260B	HCl / 4°C	(3) 40 mL Vials	NO
VOCs 8015B	HCl / 4°C	(2) 40 mL Vials	
SVOCs (8270C)	4°C	(2) 1 L Amber	
SVOCs (SIM)	4°C	(2) 1 L Amber	
SVOCs (8151A)	4°C	(2) 1 L Amber	
Explosives (8330)	4°C	3X (2) 1 L Amber	Yes
Total Metals (6020) & Total Hg (7470A)	HNO3 / 4°C	3X (1) 1 L HDPE	Yes
Dissolved Metals (6020) & Dis. Hg (7470A)	HNO3/ 4°C	(1) 1 L HDPE	~~Yes~~ NO
Ammonia (350.1) & Nitrate (353.2)	H2SO4/ 4°C	3X (1) 1 L HDPE	Yes

OBSERVATIONS / NOTES:

Circle if Applicable:

MS/MSD YES

Duplicate ID No.: ——

Signature(s): Tony Rojahn

TBD: To Be Determined

Tetra Tech NUS, Inc.

LOW FLOW PURGE DATA SHEET

PROJECT SITE NAME: NSWC CRANE
PROJECT NUMBER: N9060 CTO O279

WELL ID.: 13MWT17
DATE: 5/7/03

Time (Hrs.)	Water Level (Ft. below TOC)	Flow (mL/Min.)	Temp. (Celsius)	pH (S.U.)	Cond. (mS/cm)	DO (mg/L)	ORP (mV)	Turb. (NTU)	Comments (Volume & Color)
0750	9.00	—	—	—	—	—	—	—	Start PURGE
0800	9.03	120	14.92	5.32	0.171	1.48	+75	14	1200 ml CLEAR
0810	9.03	100	14.90	5.33	0.169	1.39	77	13	2200 "
0820	9.03	100	14.63	5.33	0.167	1.31	79	15	3200 "
0830	9.03	100	14.99	5.34	0.168	0.59	82	15	4200 "
0840	9.03	100	15.13	5.34	0.167	0.60	85	18	5200 "
0850	9.03	100	15.15	5.33	0.166	0.57	89	18	6200 "
0900	9.03	100	15.21	5.35	0.166	0.56	93	17	7200 "
0910	9.03	100	15.36	5.34	0.167	0.55	94	15	8200 "
0920	9.03	100	15.38	5.34	0.167	0.55	97	15	9200 "
0930	9.03	100	15.51	5.35	0.168	0.54	100	15	10200 "
0940	9.03	100	15.52	5.34	0.167	0.55	102	14	11200 "
0950	9.03	100	15.69	5.34	0.168	0.54	104	13	12200 "
1000	9.05	100	15.73	5.35	0.171	0.54	108	12	13200 "
1010	9.06	100	15.69	5.35	0.170	0.54	110	11	14200 "
1020	9.06	100	15.70	5.35	0.170	0.53	112	10	15200 "

SIGNATURE(S): Terry Rogers

Tetra Tech NUS, Inc.

GROUNDWATER SAMPLE LOG SHEET

Project Site Name: NSWC CRANE
Project No.: N9060 CTO 0279

[] Domestic Well Data
[X] Monitoring Well Data
[] Other Well Type:
[] QA Sample Type:

Sample ID No.: 13GWT18 01 & F
Sample Location: 13MWT18
Sampled By: B BALKOVEC
C.O.C. No.: 0995
Type of Sample:
[X] Low Concentration
[] High Concentration

SAMPLING DATA:

	Color	pH	S.C.	Temp.	Turbidity	DO	SALINITY	ORP
Date: 5/6/03	Visual	Standard	mS/cm	°C	NTU	mg/l	%	mV
Time: 1342								
Method: PERSTALTIC	Clear	3.88	0.514	16.75	450	2.17	NA	134.1

PURGE DATA:

	Volume	pH	S.C.	Temp. (C)	Turbidity	DO	SALINITY	ORP
Date: 5/6/03								
Method: PERSTALTIC								
Monitor Reading (ppm): —								
Well Casing Diameter & Material								
Type: 2" dia. PVC								
Total Well Depth (TD): 33.27	SEE LOW FLOW PURGE DATA SHEET							
Static Water Level (WL): 19.23								
One Casing Volume (gal/L): 2.3								
Start Purge (hrs): 0938								
End Purge (hrs): 1340								
Total Purge Time (min): 242								
Total Vol. Purged (gal/L) 18.8L								

SAMPLE COLLECTION INFORMATION:

Analysis	Preservative	Container Requirements	Collected
VOCs 8260B	HCl / 4°C	(3) 40 mL Vials	NO
VOCs 8015B	HCl / 4°C	(2) 40 mL Vials	
SVOCs (8270C)	4°C	(2) 1 L Amber	
SVOCs (SIM)	4°C	(2) 1 L Amber	
SVOCs (8151A)	4°C	(2) 1 L Amber	
Explosives (8330)	4°C	(2) 1 L Amber	Yes
Total Metals (6020) & Total Hg (7470A)	HNO3 / 4°C	(1) 1 L HDPE	Yes
Dissolved Metals (6020) & Dis. Hg (7470A)	HNO3/ 4°C	(1) 1 L HDPE	Yes
Ammonia (350.1) & Nitrate (353.2)	H2SO4/ 4°C	(1) 1 L HDPE	Yes

OBSERVATIONS / NOTES:

Circle if Applicable:

MS/MSD	Duplicate ID No.:
—	—

Signature(s): Robert Balkovec

TBD: To Be Determined

Tetra Tech NUS, Inc.

LOW FLOW PURGE DATA SHEET

PROJECT SITE NAME: NSWC CRANE
PROJECT NUMBER: N9060 CTO O279

WELL ID.: 13MWT18
DATE: 5/6/03

Time (Hrs.)	Water Level (Ft. below TOC)	Flow (mL/Min.)	Temp. (Celsius)	pH (S.U.)	Cond. (mS/cm)	DO (mg/L)	ORP (mV)	Turb. (NTU)	Comments (Volume & Color)
0938	19.23	START							HAZY →
0945	20.24	110	16.11	4.69	0.389	3.20	+226.4	50	.77 L
0950	20.73	80	16.46	4.28	0.399	2.06	+282.9	40	—
1000	21.64	80	16.84	4.27	0.378	1.92	+296.8	26	UNABLE TO LOWER RATE 1.2 L
1010	22.65	80	16.56	4.28	0.341	1.87	+305.8	65	2.0 L
1020	23.71	80	16.51	4.21	0.343	1.82	+317.1	90	2.8 L
1030	24.15	80	17.40	4.12	0.379	1.77	+323.8	75	3.6 L
1040	24.58	80	17.46	4.08	0.348	1.84	+329.3	70	4.4 L
1050	25.00	80	17.55	3.94	0.354	1.85	+342.4	120	5.2 L
1100	25.32	80	18.00	3.85	0.361	1.77	+357.8	220	6.0 L
1110	25.68	80	18.10	3.71	0.381	1.64	+361.7	250	6.8 L
1120	25.97	80	18.16	3.68	0.401	1.57	+370.2	280	7.6 L
1130	26.27	80	17.17	3.56	0.421	1.51	+369.1	280	8.4 L
1140	26.53	80	17.04	3.61	0.451	1.47	+363.9	250	7 vol 2 HRS 9.2 L
1150	26.76	80	17.32	3.67	0.477	1.44	+356.2	230	10.0 L
1200	27.01	80	17.30	3.70	0.481	1.47	+340.1	300	10.8 L
1210	27.16	80	17.29	3.74	0.500	1.50	+331.3	350	11.6 L
1220	27.35	80	17.28	3.77	0.525	1.53	+326.8	450	CLEANED OUT CELL 12.4 L
1230	27.51	80	17.80	3.84	0.544	2.22	+327.4	450	13.2 L
1240	27.65	80	17.48	3.81	0.532	1.73	+330.6	450	3 HRS 14.0 L
1250	27.82	80	17.17	3.79	0.526	1.83	+334.8	450	14.8 L
1300	27.90	80	17.18	3.79	0.525	1.90	+335.0	450	15.6 L
1310	28.01	80	17.20	3.80	0.524	1.91	+335.1	450	16.4 L
1320	28.14	80	16.90	3.87	0.519	2.00	+324.7	450	17.2 L
1330	28.30	80	16.78	3.87	0.517	2.10	+324.5	450	18.0 L
1340	28.51	80	16.75	3.88	0.514	2.17	+324.1	450	4 HRS. 2 vol 18.8 L
→ End Purge									
Sampled @ 1342									

SIGNATURE(S): Robert Balkner 8.6 L total 33.27' T.O.

Tetra Tech NUS, Inc.

GROUNDWATER SAMPLE LOG SHEET

Project Site Name: NSWC CRANE
Project No.: N9060 CTO 0279

[] Domestic Well Data
[X] Monitoring Well Data
[] Other Well Type:
[] QA Sample Type:

Sample ID No.: 13GWT19 01
Sample Location: 13MWT19
Sampled By: B. BALKOVEC
C.O.C. No.: 0985
Type of Sample:
[X] Low Concentration
[] High Concentration

SAMPLING DATA:

	Color	pH	S.C.	Temp.	Turbidity	DO	SALINITY	ORP
Date: 5/7/03	Visual	Standard	mS/cm	°C	NTU	mg/l	%	mV
Time: 1347								
Method: PERISTALTIC	CLEAR	5.12	1.241	13.81	5.0	3.51	NA	-224.1

PURGE DATA:

Date: 5/7/03	Volume	pH	S.C.	Temp. (C)	Turbidity	DO	SALINITY	ORP
Method: PERISTALTIC								
Monitor Reading (ppm): —								
Well Casing Diameter & Material								
Type: 2" dia. PVC								
Total Well Depth (TD): 22.05'	SEE LOW FLOW PURGE DATA SHEET							
Static Water Level (WL): 8.33'								
One Casing Volume (gal/L): 2.2								
Start Purge (hrs): 1155								
End Purge (hrs): 1345								
Total Purge Time (min): 110								
Total Vol. Purged (gal/L):								

SAMPLE COLLECTION INFORMATION:

Analysis	Preservative	Container Requirements	Collected
VOCs 8260B	HCl / 4°C	(3) 40 mL Vials	NO
VOCs 8015B	HCl / 4°C	(2) 40 mL Vials	
SVOCs (8270C)	4° C	(2) 1 L Amber	
SVOCs (SIM)	4° C	(2) 1 L Amber	
SVOCs (8151A)	4° C	(2) 1 L Amber	
Explosives (8330)	4° C	(2) 1 L Amber	Yes
Total Metals (6020) & Total Hg (7470A)	HNO3 / 4° C	(1) 1 L HDPE	Yes
Dissolved Metals (6020) & Dis. Hg (7470A)	HNO3/ 4° C	(1) 1 L HDPE	~~Yes~~ NO
Ammonia (350.1) & Nitrate (353.2)	H2SO4/ 4° C	(1) 1 L HDPE	Yes

OBSERVATIONS / NOTES:

Circle if Applicable:

MS/MSD	Duplicate ID No.:
—	—

Signature(s): Robert Balkovec

TBD: To Be Determined

Tetra Tech NUS, Inc.

LOW FLOW PURGE DATA SHEET

PROJECT SITE NAME: NSWC CRANE
PROJECT NUMBER: N9060 CTO 0279

WELL ID.: 13MW719
DATE: 5/7/03

Time (Hrs.)	Water Level (Ft. below TOC)	Flow (mL/Min.)	Temp. (Celsius)	pH (S.U.)	Cond. (mS/cm)	DO (mg/L)	ORP (mV)	Turb. (NTU)	Comments (Volume & Color)
1155	8.33	START							CLEAR —
1200	8.75	100	14.58	5.18	1.209	4.09	+240.6	11	—
1205	8.96	80	14.45	5.24	1.222	3.86	+226.4	7.2	.9L
1210	9.09	90	14.10	5.24	1.217	3.73	+210.1	6.2	—
1215	9.15	80	14.11	5.25	1.217	3.71	+217.7	7.6	≈ 1.7L
1225	9.18	80	14.15	5.24	1.228	3.66	+217.1	[illegible]	WANDER TO LOWER RATE — 2.5
1235	9.30	80	13.91	5.23	1.229	3.65	[illegible]	[illegible]	[illegible] 3.3
1245	9.30	80	14.02	5.22	1.234	3.65	+221.7	7.8	— 4.1
1255	9.36	80	14.07	5.19	1.239	3.58	+224.3	7.0	[illegible] 4.9
1305	9.39	80	14.02	5.17	1.240	3.55	+225.1	3.5	— 5.7
1315	9.41	80	13.89	5.15	1.239	3.59	+224.8	4.1	[illegible] 6.5
1325	9.43	80	13.75	5.13	1.240	3.55	+224.7	5.0	— 7.3
1335	9.45	80	13.80	5.13	1.239	3.53	+220.0	5.3	[illegible] 8.1
1345	9.46	80	13.81	5.12	1.241	3.51	+224.1	5.0	>1 vol — 8.4L
	→ END PURGE								[illegible]
	SAMPLED @	1347							

SIGNATURE(S): Robert Bulkner 8.5L = 1 vol

Tetra Tech NUS, Inc.

GROUNDWATER SAMPLE LOG SHEET

Project Site Name: NSWC CRANE
Project No.: N9060 CTO 0279

[] Domestic Well Data
[X] Monitoring Well Data
[] Other Well Type:
[] QA Sample Type:

Sample ID No.: 13GWT2001 EF
Sample Location: 13MWT20
Sampled By: B. BALKOVEC
C.O.C. No.: 0994
Type of Sample:
[X] Low Concentration
[] High Concentration

SAMPLING DATA:

	Color	pH	S.C.	Temp.	Turbidity	DO	SALINITY	ORP
Date: 4/28/03	Visual	Standard	mS/cm	°C	NTU	mg/l	%	mV
Time: 1606								
Method: PHS75W-73R	CLEAR	3.48	1.504	15.78	19	0.11	NA	-265.0

PURGE DATA:

	Volume	pH	S.C.	Temp. (C)	Turbidity	DO	SALINITY	ORP
Date: 4/28/03								
Method: Peristaltic								
Monitor Reading (ppm): –								
Well Casing Diameter & Material								
Type: 2" dia. PVC								
Total Well Depth (TD): 22.85	SEE LOW FLOW PURGE DATA SHEET							
Static Water Level (WL): 4.77								
One Casing Volume(gal/L): 11.2								
Start Purge (hrs): 1205								
End Purge (hrs): 1605								
Total Purge Time (min): 240								
Total Vol. Purged (gal/L): 22.2								

SAMPLE COLLECTION INFORMATION:

Analysis	Preservative	Container Requirements	Collected
VOCs 8260B	HCl / 4°C	(3) 40 mL Vials	YES
VOCs 8015B	HCl / 4°C	(2) 40 mL Vials	YES
SVOCs (8270C)	4°C	(2) 1 L Amber	YES
SVOCs (SIM)	4°C	(2) 1 L Amber	YES
SVOCs (8151A)	4°C	(2) 1 L Amber	YES
Explosives (8330)	4°C	(2) 1 L Amber	Yes
Total Metals (6020) & Total Hg (7470A)	HNO3 / 4°C	(1) 1 L HDPE	Yes
Dissolved Metals (6020) & Dis. Hg (7470A)	HNO3/ 4°C	(1) 1 L HDPE	Yes
Ammonia (350.1) & Nitrate (353.2)	H2SO4/ 4°C	(1) 1 L HDPE	Yes

OBSERVATIONS / NOTES:

INTAKE MID SCREEN

Circle if Applicable:

MS/MSD	Duplicate ID No.:
—	—

Signature(s): Robert Balkovec

TBD: To Be Determined

Tetra Tech NUS, Inc.

LOW FLOW PURGE DATA SHEET

PROJECT SITE NAME: NSWC CRANE
PROJECT NUMBER: N9060 CTO 0279

WELL ID.: 13MWT20
DATE: 4/28/03

Time (Hrs.)	Water Level (Ft. below TOC)	Flow (mL/Min.)	Temp. (Celsius)	pH (S.U.)	Cond. (mS/cm)	DO (mg/L)	ORP (mV)	Turb. (NTU)	Comments (Volume & Color)
1205	4.77	—	—	—	—	—	—	—	Start Purge
1215	6.20	140	17.19	3.23	1668	0.01	+290	~~290~~ 120	1400 ml V. SL CLOUDY
1225	6.61	100	17.92	3.26	1685	0.01	+291	110	2400 ml " " "
1235	6.88	90	17.01	3.27	1.649	0.04	289	100	3300 ml " " "
1245	7.16	90	17.19	3.31	1.623	0.05	283	70	4200 ml " " "
1255	7.41	90	17.38	3.36	1.607	0.07	276	40	5100 ml CLEAR
1305	7.71	90	17.72	3.40	1.607	0.05	273	38	6000 ml "
1315	7.94	90	18.55	3.39	1.633	0.04	271	33	6900 ml "
1325	8.18	90	18.40	3.39	1.620	0.08	270	33	7800 ml "
1335	8.39	90	17.92	3.39	1.601	0.08	271	31	8700 ml "
1345	8.52	90	17.92	3.40	1.599	0.08	272	31	9600 ml "
1355	8.71	90	18.18	3.37	1.608	0.09	271	30	10500 ml "
1405	8.82	90	18.27	3.45	1.617	0.10	271	29	11400 ml "
1415	8.94	90	17.92	3.41	1.597	0.11	270	27	12300 ml "
1425	9.06	90	17.68	3.40	1.586	0.11	270	25	13200 ml "
1435	9.21	90	16.69	3.42	1.544	0.11	269	24	14100 ml "
1445	9.35	90	16.94	3.46	1.552	0.11	267	23	15000 ml "
1455	9.44	90	17.33	3.46	1.561	0.11	266	23	15900 ml "
1505	9.51	90	17.55	3.45	1.562	0.13	267	23	16800 ml "
1515	9.63	90	16.42	3.43	1.513	0.11	266	21	17700 ml "
1525	9.71	90	16.15	3.44	1.512	0.12	265	21	18600 ml "
1535	9.81	90	15.97	3.46	1.494	0.11	269	21	19500 ml "
1545	9.85	90	15.90	3.47	1.500	0.11	+263.1	22	20400 ml
1555	9.90	90	15.80	3.47	1.501	0.11	+264.1	20	21300 ml
1605	9.93	90	15.78	3.48	1.504	0.11	+265.0	19	22200 ml 4HRS
→ End Purge									
Sampled @ 1606									

SIGNATURE(S): [illegible] 1.2L = 1 vol

Tetra Tech NUS, Inc.

GROUNDWATER SAMPLE LOG SHEET

Project Site Name: NSWC CRANE
Project No.: N9060 CTO 0279

[] Domestic Well Data
[X] Monitoring Well Data
[] Other Well Type:
[] QA Sample Type:

Sample ID No.: 13GWT 2007
Sample Location: 13MWT 20
Sampled By: T. ROJAHN
C.O.C. No.: 0989
Type of Sample:
[X] Low Concentration
[] High Concentration

SAMPLING DATA:

Date: 5/9/03	Color	pH	S.C.	Temp.	Turbidity	DO	SALINITY	ORP
Time: 1505	Visual	Standard	mS/cm	°C	NTU	mg/l	%	mV
Method: SAME	CLEAR	3.65	1.445	16.70	1.4	0.54	—	+224

PURGE DATA:

Date: 5/9/03	Volume	pH	S.C.	Temp. (C)	Turbidity	DO	SALINITY	ORP
Method: Peristaltic								
Monitor Reading (ppm): –								
Well Casing Diameter & Material								
Type: 2" dia. PVC								
Total Well Depth (TD): 22.85	SEE LOW FLOW PURGE DATA SHEET							
Static Water Level (WL): 4.17								
One Casing Volume(gal/L): 11.7								
Start Purge (hrs): 1103								
End Purge (hrs): 1503								
Total Purge Time (min): 240								
Total Vol. Purged (gal/L): 25								

SAMPLE COLLECTION INFORMATION:

Analysis	Preservative	Container Requirements	Collected
VOCs 8260B	HCl / 4°C	(3) 40 mL Vials	NO
VOCs 8015B	HCl / 4°C	(2) 40 mL Vials	NO
SVOCs (8270C)	4° C	(2) 1 L Amber	YES
SVOCs (SIM)	4° C	(2) 1 L Amber	NO
SVOCs (8151A)	4° C	(2) 1 L Amber	NO YES
Explosives (8330)	4° C	(2) 1 L Amber	Yes NO
Total Metals (6020) & Total Hg (7470A)	HNO3 / 4° C	(1) 1 L HDPE	Yes
Dissolved Metals (6020) & Dis. Hg (7470A)	HNO3/ 4° C	(1) 1 L HDPE	Yes
Ammonia (350.1) & Nitrate (353.2)	H2SO4/ 4° C	(1) 1 L HDPE	Yes

OBSERVATIONS / NOTES:

Circle if Applicable:

MS/MSD	Duplicate ID No.:
—	—

Signature(s): Terry Rojahn

TBD: To Be Determined

Tetra Tech NUS, Inc.

LOW FLOW PURGE DATA SHEET

PROJECT SITE NAME: NSWC CRANE
PROJECT NUMBER: N9060 CTO O279

WELL ID.: 13MWIT20
DATE: 5/9/03

Time (Hrs.)	Water Level (Ft. below TOC)	Flow (mL/Min.)	Temp. (Celsius)	pH (S.U.)	Cond. (mS/cm)	DO (mg/L)	ORP (mV)	Turb. (NTU)	Comments (Volume & Color)
1103	4.17	—	—	—	—	—	—	—	START PURGE
1113	5.55	160	16.39	3.72	2.157	1.05	193	8.2	1600 ml CLEAR
1123	6.30	140	17.71	3.75	1.796	1.10	195	6.7	3000 ml CLEAR
1133	6.82	100	17.49	3.90	1.667	1.07	180	6.9	4000 ml CLEAR
1143	7.22	100	17.10	4.11	1.500	1.05	166	7.0	5000 ml CLEAR
1153	7.83	100	16.63	3.95	1.451	0.77	173	6.7	6000 ml CLEAR
1203	8.34	100	16.21	3.88	1.399	0.57	186	6.7	7000 ml CLEAR
1213	8.65	100	16.15	3.83	1.410	0.55	190	6.0	8000 ml CLEAR
1223	8.93	100	16.10	3.79	1.418	0.53	194	5.4	9000 ml CLEAR
1233	9.24	100	16.35	3.75	1.417	0.53	197	5.2	10000 ml CLEAR
1243	9.48	100	16.55	3.72	1.417	0.54	205	5.0	11000 ml CLEAR
1253	9.63	100	16.86	3.72	1.428	0.56	205	4.3	12,000 ml CLEAR
1303	9.78	100	17.06	3.70	1.458	0.58	206	3.7	13,000 ml CLEAR
1313	9.92	100	17.01	3.68	1.449	0.56	209	3.4	14,000 ml CLEAR
1323	10.06	100	16.96	3.66	1.440	0.55	212	3.2	15,000 ml CLEAR
1333	10.20	100	16.94	3.66	1.433	0.54	215	3.1	16,000 ml CLEAR
1343	10.33	100	16.90	3.66	1.425	0.53	217	3.0	17,000 ml CLEAR
1353	10.50	100	16.88	3.66	1.428	0.53	218	2.9	18,000 ml CLEAR
1403	10.66	100	16.86	3.66	1.431	0.53	219	2.7	19,000 ml CLEAR
1413	10.82	100	16.85	3.64	1.433	0.53	220	2.7	20,000 ml CLEAR
1423	10.89	100	16.40	3.65	1.438	0.52	220	2.5	21,000 ml CLEAR
1433	10.97	100	16.36	3.65	1.443	0.50	221	2.4	22,000 ml CLEAR
1443	11.05	100	16.48	3.65	1.440	0.50	223	1.8	23,000 ml CLEAR
1453	11.12	100	16.55	3.65	1.433	0.52	224	1.4	24,000 ml CLEAR
1503	11.19	100	16.70	3.65	1.445	0.54	224	1.4	25,000 ml CLEAR
1505	—	—	—	—	—	—	—	—	START SAMPLING

SIGNATURE(S): [illegible]

Tetra Tech NUS, Inc.

GROUNDWATER SAMPLE LOG SHEET

Project Site Name: NSWC CRANE
Project No.: N9060 CTO 0279

[] Domestic Well Data
[X] Monitoring Well Data
[] Other Well Type:
[] QA Sample Type:

Sample ID No.: 13GWT21 01
Sample Location: 13MWT21
Sampled By: B. BALKOVEC
C.O.C. No.: 0991
Type of Sample:
[X] Low Concentration
[] High Concentration

SAMPLING DATA:

Date: 4/25/03	Color	pH	S.C.	Temp.	Turbidity	DO	SALINITY	ORP
Time: 1346	Visual	Standard	mS/cm	°C	NTU	mg/l	%	mV
Method: PERISTALTIC	CLEAR	5.46	0.212	13.01	8.2	1.45	NA	+193.6

PURGE DATA:

Date: 4/25/03	Volume	pH	S.C.	Temp. (C)	Turbidity	DO	SALINITY	ORP
Method: PERISTALTIC								
Monitor Reading (ppm): —								
Well Casing Diameter & Material								
Type: 2" dia. PVC								
Total Well Depth (TD): 17.76	SEE LOW FLOW PURGE DATA SHEET							
Static Water Level (WL): 8.26								
One Casing Volume (gal/L): 1.5								
Start Purge (hrs): 1237								
End Purge (hrs): 1345								
Total Purge Time (min): 68								
Total Vol. Purged (gal/L): 1.8								

SAMPLE COLLECTION INFORMATION:

Analysis	Preservative	Container Requirements	Collected
VOCs 8260B	HCl / 4°C	(3) 40 mL Vials	NO
VOCs 8015B	HCl / 4°C	(2) 40 mL Vials	
SVOCs (8270C)	4° C	(2) 1 L Amber	
SVOCs (SIM)	4° C	(2) 1 L Amber	
SVOCs (8151A)	4° C	(2) 1 L Amber	
Explosives (8330)	4° C	2x (2) 1 L Amber	Yes
Total Metals (6020) & Total Hg (7470A)	HNO3 / 4° C	2x (1) 1 L HDPE	Yes
Dissolved Metals (6020) & Dis. Hg (7470A)	HNO3/ 4° C	(1) 1 L HDPE	~~Yes~~ NO
Ammonia (350.1) & Nitrate (353.2)	H2SO4/ 4° C	2x (1) 1 L HDPE	Yes

OBSERVATIONS / NOTES:

5.8 L = 1 vol

Circle if Applicable:

MS/MSD	Duplicate ID No.:
—	FD04250301

Signature(s): Robert Balkovec

TBD: To Be Determined

Tetra Tech NUS, Inc.

LOW FLOW PURGE DATA SHEET

PROJECT SITE NAME: NSWC CRANE
PROJECT NUMBER: N9060 CTO O279

WELL ID.: 13MWT24
DATE: 4/25/03

Time (Hrs.)	Water Level (Ft. below TOC)	Flow (mL/Min.)	Temp. (Celsius)	pH (S.U.)	Cond. (mS/cm)	DO (mg/L)	ORP (mV)	Turb. (NTU)	Comments (Volume & Color)	Vol.
1237	8.76	START							CLEAR/SL. HAZY	
1240	8.52	160	12.51	5.66	0.213	1.38	+165.0	51		.48L
1245	8.57	130	12.34	5.59	0.211	1.03	+160.1	40		—
1250	8.62	100	12.45	5.56	0.211	0.99	+161.5	18	CLEAR	1.8L
1255	8.64	100	12.68	5.53	0.210	1.02	+160.8	15		—
1300	8.65	100	12.74	5.52	0.210	1.04	+171.8	13		2.8L
1305	8.69	100	12.73	5.52	0.210	1.05	+175.2	29	SLIGHT HAZE	—
1310	8.70	100	12.78	5.51	0.210	1.14	+177.8	29		3.8L
1315	8.72	100	12.80	5.50	0.211	1.22	+180.4	21	UNABLE TO PUMP LOWER	—
1320	8.74	100	12.92	5.49	0.211	1.33	+182.9	17	THAN 100 ml/min.	4.8L
1325	8.76	100	13.00	5.48	0.213	1.37	+186.3	15	PUMP SHUTS OFF	—
1330	8.77	100	12.99	5.47	0.212	1.40	+188.7	11		5.8L
1335	8.77	100	13.02	5.46	0.213	1.41	+191.1	10		—
1340	8.78	100	12.99	5.47	0.212	1.42	+191.8	8.5		6.8L
1345	8.78	100	13.01	5.46	0.212	1.45	+193.6	8.2		
→ END PURGE										
	SAMPLED @	1346								

SIGNATURE(S): Robert Bulkner 5.8 L total

Tetra Tech NUS, Inc.

GROUNDWATER SAMPLE LOG SHEET

Project Site Name: NSWC CRANE
Project No.: N9060 CTO 0279

[] Domestic Well Data
[X] Monitoring Well Data
[] Other Well Type:
[] QA Sample Type:

Sample ID No.: 13GWT2201
Sample Location: 13MWT22
Sampled By: T. ROJAHN
C.O.C. No.: 0995
Type of Sample:
[X] Low Concentration
[] High Concentration

SAMPLING DATA:

	Color	pH	S.C.	Temp.	Turbidity	DO	SALINITY	ORP
Date: 5/06/03	Visual	Standard	mS/cm	°C	NTU	mg/l	%	mV
Time: 1542								
Method: SAME	CLEAR	3.95	0.245	14.15	0.00	0.64	—	+264

PURGE DATA:

	Volume	pH	S.C.	Temp. (C)	Turbidity	DO	SALINITY	ORP
Date: 5/06/03								
Method: Peristaltic								
Monitor Reading (ppm): —								
Well Casing Diameter & Material								
Type: 2" dia. PVC								
Total Well Depth (TD): 17.76	SEE LOW FLOW PURGE DATA SHEET							
Static Water Level (WL): 7.64								
One Casing Volume(gal/L): 6.3								
Start Purge (hrs): 1400								
End Purge (hrs): 1540								
Total Purge Time (min): 100								
Total Vol. Purged (gal/L): 10.6								

SAMPLE COLLECTION INFORMATION:

Analysis	Preservative	Container Requirements	Collected
VOCs 8260B	HCl / 4°C	(3) 40 mL Vials	NO
VOCs 8015B	HCl / 4°C	(2) 40 mL Vials	
SVOCs (8270C)	4° C	(2) 1 L Amber	
SVOCs (SIM)	4° C	(2) 1 L Amber	
SVOCs (8151A)	4° C	(2) 1 L Amber	
Explosives (8330)	4° C	(2) 1 L Amber	Yes
Total Metals (6020) & Total Hg (7470A)	HNO3 / 4° C	(1) 1 L HDPE	Yes
Dissolved Metals (6020) & Dis. Hg (7470A)	HNO3/ 4° C	(1) 1 L HDPE	~~Yes~~ NO
Ammonia (350.1) & Nitrate (353.2)	H2SO4/ 4° C	(1) 1 L HDPE	Yes

OBSERVATIONS / NOTES:

Circle if Applicable:

MS/MSD	Duplicate ID No.:
—	—

Signature(s): Tey Rojahn

TBD: To Be Determined

Tetra Tech NUS, Inc.

LOW FLOW PURGE DATA SHEET

PROJECT SITE NAME: NSWC CRANE
PROJECT NUMBER: N9060 CTO 0279

WELL ID.: 13MWT22
DATE: 5/06/03

Time (Hrs.)	Water Level (Ft. below TOC)	Flow (mL/Min.)	Temp. (Celsius)	pH (S.U.)	Cond. (mS/cm)	DO (mg/L)	ORP (mV)	Turb. (NTU)	Comments (Volume & Color)
1400	7.64	—	—	-	—	—	—	—	START PURGE
1410	8.35	1600	14.37	4.97	0.255	1.97	+172	12	1600 CLEAR
1420	8.28	100	15.38	4.82	0.256	1.39	181	12	2600 "
1430	8.31	100	15.11	4.66	0.251	1.50	181	7.9	3600 "
1440	8.30	100	15.04	4.40	0.248	1.03	205	4.0	4600 "
1450	8.33	100	14.92	4.22	0.247	0.92	223	5.0	5600 "
1500	8.35	100	14.83	4.13	0.247	0.86	235	0.15	6600 "
1510	8.35	100	14.83	4.01	0.247	0.76	250	0.10	7600 "
1520	8.40	100	14.10	3.95	0.243	0.70	258	0.10	8600 "
1530	8.45	100	14.01	3.92	0.242	0.68	261	0.10	9600 "
1540	8.40	100	14.15	3.95	0.245	0.64	264	0.00	10600 "

SIGNATURE(S): [illegible]

Tetra Tech NUS, Inc.

GROUNDWATER SAMPLE LOG SHEET

Project Site Name: NSWC CRANE
Project No.: N9060 CTO 0279

[] Domestic Well Data
[X] Monitoring Well Data
[] Other Well Type:
[] QA Sample Type:

Sample ID No.: 13GWT23 01
Sample Location: 13MWT23
Sampled By: T. ROJAHN
C.O.C. No.: 0995
Type of Sample:
[X] Low Concentration
[] High Concentration

SAMPLING DATA:

	Color	pH	S.C.	Temp.	Turbidity	DO	SALINITY	ORP
Date: 5/06/03	Visual	Standard	mS/cm	°C	NTU	mg/l	%	mV
Time: 1242								
Method: SAME	CLEAR	5.19	0.314	16.46	0.7	4.09	—	+131

PURGE DATA:

Date: 5/6/03	Volume	pH	S.C.	Temp. (C)	Turbidity	DO	SALINITY	ORP
Method: Peristaltic								
Monitor Reading (ppm): —								
Well Casing Diameter & Material								
Type: 2" dia. PVC								
Total Well Depth (TD): 24.50	SEE LOW FLOW PURGE DATA SHEET							
Static Water Level (WL): 7.62								
One Casing Volume(gal/L): 10.5								
Start Purge (hrs): 0840								
End Purge (hrs): 1240								
Total Purge Time (min): 240								
Total Vol. Purged (gal/L): 22.1								

SAMPLE COLLECTION INFORMATION:

Analysis	Preservative	Container Requirements	Collected
VOCs 8260B	HCl / 4°C	(3) 40 mL Vials	NO
VOCs 8015B	HCl / 4°C	(2) 40 mL Vials	
SVOCs (8270C)	4° C	(2) 1 L Amber	
SVOCs (SIM)	4° C	(2) 1 L Amber	
SVOCs (8151A)	4° C	(2) 1 L Amber	
Explosives (8330)	4° C	(2) 1 L Amber	Yes
Total Metals (6020) & Total Hg (7470A)	HNO3 / 4° C	(1) 1 L HDPE	Yes
Dissolved Metals (6020) & Dis. Hg (7470A)	HNO3/ 4° C	(1) 1 L HDPE	~~Yes~~ NO
Ammonia (350.1) & Nitrate (353.2)	H2SO4/ 4° C	(1) 1 L HDPE	Yes

OBSERVATIONS / NOTES:

Circle if Applicable:

MS/MSD	Duplicate ID No.:
—	—

Signature(s): Terry Rojahn

TBD: To Be Determined

Tetra Tech NUS, Inc.

LOW FLOW PURGE DATA SHEET

PROJECT SITE NAME: NSWC CRANE
PROJECT NUMBER: N9060 CTO O279

WELL ID.: 13MWT23
DATE: 5/06/03

Time (Hrs.)	Water Level (Ft. below TOC)	Flow (mL/Min.)	Temp. (Celsius)	pH (S.U.)	Cond. (mS/cm)	DO (mg/L)	ORP (mV)	Turb. (NTU)	Comments (Volume & Color)
0840	7.62	–	–	–	–	–	–	–	start PURGE
0850	9.08	110	14.46	5.15	0.302	4.77	100	40.0	1100 CLEAR
0900	9.55	90	15.02	5.17	0.305	4.58	106	13.0	2000 "
0910	10.08	100	14.87	5.16	0.304	4.47	116	6.2	3000 "
0920	10.43	90	15.50	5.18	0.311	4.91	125	18.0	3900 "
0930	10.50	100	14.77	5.16	0.305	4.29	127	24.0	4900 "
0940	10.86	100	14.65	5.15	0.304	4.17	129	13.0	5900 "
0950	11.11	90	15.50	5.21	0.311	4.18	130	7.2	6800 "
1000	11.32	90	15.76	5.19	0.313	4.13	132	7.3	7700 "
1010	11.44	90	15.76	5.18	0.312	4.16	133	7.5	8600 "
1020	11.63	90	16.00	5.15	0.313	4.14	137	6.2	9500 "
1030	11.71	90	16.54	5.13	0.318	4.15	140	4.6	10400 "
1040	11.76	90	17.08	5.14	0.322	4.11	141	2.4	11300 "
1050	11.80	90	17.06	5.09	0.322	4.09	142	1.8	12200 "
1100	11.89	90	17.09	5.10	0.321	4.10	144	2.0	13100 "
1110	11.96	90	16.93	5.11	0.320	4.11	145	2.4	14000 "
1120	12.01	90	16.99	5.07	0.320	4.09	146	2.3	14900 "
1130	12.02	90	16.86	5.11	0.314	4.09	145	2.2	15800 "
1140	12.07	90	15.73	5.11	0.310	4.17	143	1.6	16700 "
1150	12.10	90	16.35	5.17	0.313	4.13	140	1.2	17600 "
1200	12.14	90	16.14	5.17	0.312	4.19	138	1.1	18500 "
1210	12.17	90	16.00	5.16	0.311	4.15	137	1.4	19400 "
1220	12.20	90	15.73	5.18	0.308	4.15	136	1.3	20300 "
1230	12.23	90	16.20	5.19	0.312	4.08	132	0.9	21200 "
1240	12.26	90	16.46	5.19	0.314	4.09	131	0.7	22100 "
1242	–	–	–	–	–	–	–	–	start Sampling

SIGNATURE(S): [signature]

Tetra Tech NUS, Inc.

GROUNDWATER SAMPLE LOG SHEET

Project Site Name: NSWC CRANE
Project No.: N9060 CTO 0279

[] Domestic Well Data
[X] Monitoring Well Data
[] Other Well Type:
[] QA Sample Type:

Sample ID No.: 13GWT24 01
Sample Location: 13MWT24
Sampled By: B. BALKANE
C.O.C. No.: 0993
Type of Sample:
[X] Low Concentration
[] High Concentration

SAMPLING DATA:

	Color	pH	S.C.	Temp.	Turbidity	DO	SALINITY	ORP
Date: 4/28/03	Visual	Standard	mS/cm	°C	NTU	mg/l	%	mV
Time: 1456								
Method: PERISTALTIC	CLEAR	5.40	0.671	16.76	5.2	2.89	NA	-284.0

PURGE DATA:

	Volume	pH	S.C.	Temp. (C)	Turbidity	DO	SALINITY	ORP
Date: 4/28/03								
Method: PERISTALTIC								
Monitor Reading (ppm): —								
Well Casing Diameter & Material								
Type: 2" dia. PVC								
Total Well Depth (TD): 25.19	SEE LOW FLOW PURGE DATA SHEET							
Static Water Level (WL): 9.04								
One Casing Volume (gal/L): 2.6								
Start Purge (hrs): 1311								
End Purge (hrs): 1455								
Total Purge Time (min): 104								
Total Vol. Purged (gal/L): 2.6								

SAMPLE COLLECTION INFORMATION:

Analysis	Preservative	Container Requirements	Collected
VOCs 8260B	HCl / 4°C	(3) 40 mL Vials	NO
VOCs 8015B	HCl / 4°C	(2) 40 mL Vials	
SVOCs (8270C)	4°C	(2) 1 L Amber	
SVOCs (SIM)	4°C	(2) 1 L Amber	
SVOCs (8151A)	4°C	(2) 1 L Amber	
Explosives (8330)	4°C	(2) 1 L Amber	Yes
Total Metals (6020) & Total Hg (7470A)	HNO3 / 4°C	(1) 1 L HDPE	Yes
Dissolved Metals (6020) & Dis. Hg (7470A)	HNO3/ 4°C	(1) 1 L HDPE	~~Yes~~ NO
Ammonia (350.1) & Nitrate (353.2)	H2SO4/ 4°C	(1) 1 L HDPE	Yes

OBSERVATIONS / NOTES:

Circle if Applicable:

MS/MSD	Duplicate ID No.:
—	—

Signature(s): Robert Balkane

TBD: To Be Determined

Tetra Tech NUS, Inc.

LOW FLOW PURGE DATA SHEET

PROJECT SITE NAME: NSWC CRANE
PROJECT NUMBER: N9060 CTO O279

WELL ID.: 13MW724
DATE: 4/28/03

Time (Hrs.)	Water Level (Ft. below TOC)	Flow (mL/Min.)	Temp. (Celsius)	pH (S.U.)	Cond. (mS/cm)	DO (mg/L)	ORP (mV)	Turb. (N.T.U.)	Comments (Volume & Color)
1311	9.04	START							HAZY. 7
1315	9.53	150	17.21	6.09	0.734	4.07	+178.1	33	–
1320	10.13	150	16.33	5.99	0.689	3.54	+176.1	19	1.4L
1325	10.43	100	16.57	5.95	0.687	3.38	+193.6	17	1.9L
1330	10.61	90	17.01	5.96	0.695	3.30	+212.4	21	–
1335	10.76	90	16.93	5.95	0.694	3.29	+223.0	19	UNABLE TO SLOW RATE. 2.8L
1345	11.04	90	16.76	5.94	0.688	3.25	+246.5	15	3.7L
1355	11.11	90	17.31	5.95	0.693	3.18	+220.3	12	4.6L
1405	11.19	90	17.18	5.92	0.691	3.19	+287.0	11	5.5L
1415	11.25	90	17.06	5.91	0.690	3.08	+304.0	7.7	CLEAR 6.3L
1425	11.30	90	16.85	5.91	0.685	3.07	+303.0	8.2	7.2L
1435	11.31	90	16.80	5.91	0.674	3.00	+284.0	8.8	8.2L
1445	11.33	90	16.78	5.91	0.672	2.90	+285.1	4.7	9.0L
1455	11.34	90	16.76	5.90	0.671	2.89	+284.0	5.2	1vol 10.0L
→ END PURGE									
SAMPLED @		1450							

SIGNATURE(S): Robert Baltner

10L = 1vol.

Tetra Tech NUS, Inc.

GROUNDWATER SAMPLE LOG SHEET

Project Site Name: NSWC CRANE
Project No.: N9060 CTO 0279

[] Domestic Well Data
[X] Monitoring Well Data
[] Other Well Type:
[] QA Sample Type:

Sample ID No.: 13GWT25 01
Sample Location: 13MWT25
Sampled By: B. Balkovec
C.O.C. No.: 0996, 0994
Type of Sample: 0995 & 0992
[X] Low Concentration
[] High Concentration

SAMPLING DATA:

	Color Visual	pH Standard	S.C. mS/cm	Temp. °C	Turbidity NTU	DO mg/l	SALINITY %	ORP mV
Date: Start 4/26/03								
Time: 1230								
Method: Peristaltic	BRN	6.45	0.511	12.00	> 999	4.21	—	+ 219

PURGE DATA:

	Volume	pH	S.C.	Temp. (C)	Turbidity	DO	SALINITY	ORP
Date: 4/25/03								
Method: Peristaltic								
Monitor Reading (ppm): —								
Well Casing Diameter & Material								
Type: 2" dia. PVC								
Total Well Depth (TD): 18.02	SEE LOW FLOW PURGE DATA SHEET							
Static Water Level (WL): 14.76								
One Casing Volume (gal/L): .53								
Start Purge (hrs): 1110								
End Purge (hrs): 1210								
Total Purge Time (min): 60								
Total Vol. Purged (gal/L) 5.25								

SAMPLE COLLECTION INFORMATION:

	Analysis	Preservative	Container Requirements	Collected
	VOCs 8260B	HCl / 4°C	(3) 40 mL Vials	NO
	VOCs 8015B	HCl / 4°C	(2) 40 mL Vials	
	SVOCs (8270C)	4° C	(2) 1 L Amber	
	SVOCs (SIM)	4° C	(2) 1 L Amber	
	SVOCs (8151A)	4° C	(2) 1 L Amber	
–	Explosives (8330) @ 1230 4/26/03	4° C	1 ~~(2)~~ 1 L Amber	Yes
–	Total Metals (6020) & Total Hg (7470A) 4/28/03	HNO3 / 4° C	@ 1220 (1) 1 L HDPE	Yes
5/7/03	Dissolved Metals (6020) & Dis. Hg (7470A)	HNO3/ 4° C	@ (1) 1 L HDPE	Yes
–	Ammonia (350.1) & Nitrate (353.2) ~~4/28/03~~ 5/6/03	H2SO4/ 4° C	@ ~~1230~~ @ 1440 (1) 1 L HDPE	Yes

OBSERVATIONS / NOTES:

WL = 17.31' @ 0718 ON 4/26/03
WL = 17.74' @ 1228 ON 4/26/03
- START SAMPLING EXPLOSIVES @ 1230 ON 4/26/03
- FINISHED @ 1230 ON 4/27/03

@ 4/28/03 STARTED W FILL METALS @ 1220. 1/2 FULL. FINISHED 4/28/03
@ 4/28/03 W/O STARTED AMMONIA
PUMPED WELL DRY 5/5/03 WL=16.0'

Circle if Applicable:

MS/MSD	Duplicate ID No.:
—	—

Signature(s): Robert Balkovec

TBD: To Be Determined

Tetra Tech NUS, Inc.

LOW FLOW PURGE DATA SHEET

PROJECT SITE NAME: NSWC CRANE
PROJECT NUMBER: N9060 CTO 0279

WELL ID.: 13MW125
DATE: 4/25/03

Time (Hrs.)	Water Level (Ft. below TOC)	Flow (mL/Min.)	Temp. (Celsius)	pH (S.U.)	Cond. (mS/cm)	DO (mg/L)	ORP (mV)	Turb. (NTU)	Comments (Volume & Color)	Vol.
1110	14.76	START							HAZY BROWN	—
1120	15.39	100	12.68	6.42	0.588	7.20	+245.2	130		1L
1125	15.69	80	12.22	6.25	0.504	8.14	+242.7	90	HAZY	1.4L
1130	15.85	75	12.27	6.22	0.462	7.44	+240.8	110	UNABLE	1.78L
1135	16.01	75	12.24	6.22	0.456	7.76	+239.6	110	[redacted] TO PUMP LOWER	—
1140	16.24	75	12.30	6.21	0.457	7.71	+239.3	100	THAN 75 ml/min	≈2.5L
1145	16.48	75	12.32	6.22	0.474	7.50	+238.8	100	PUMP STARTS OFF.	—
1150	16.70	75	12.31	6.19	0.495	7.20	+238.2	110	→ CAN NOT STOP DRAWDOWN!	3.25L
1158	16.73		DRY							—
		WITH LOWER TURBINE TO 18.02' AND PUMP ENTIRE WELL DRY.								
1200	—	75							.8L MORE 1.1L @ 1202	
1205	17.48	120	11.98	6.37	0.691	3.61	+204.4	7999	BROWN	
1210	DRY	100	12.00	6.45	0.511	4.21	+214.1	7999		≈ 5.25L
→ END PURGE										
	ALLOW RECHARGE BEFORE SAMPLING.									

SIGNATURE(S): Robert Bulkner

2L = 1 vol. TD. 18.02

Tetra Tech NUS, Inc.

GROUNDWATER SAMPLE LOG SHEET

Project Site Name: NSWC CRANE
Project No.: N9060 CTO 0279

[] Domestic Well Data
[X] Monitoring Well Data
[] Other Well Type:
[] QA Sample Type:

Sample ID No.: 13GWT26 01
Sample Location: 13MWT26
Sampled By: B. BALLOVER
C.O.C. No.: 0991
Type of Sample:
[X] Low Concentration
[] High Concentration

SAMPLING DATA:

	Color Visual	pH Standard	S.C. mS/cm	Temp. °C	Turbidity NTU	DO mg/l	SALINITY %	ORP mV
Date: 4/25/03								
Time: 1022								
Method: PERISTALTIC	CLEAR	6.05	0.352	17.01	7.1	4.20	NA	+189.0

PURGE DATA:

	Volume	pH	S.C.	Temp. (C)	Turbidity	DO	SALINITY	ORP
Date: 4/25/03								
Method: PERISTALTIC								
Monitor Reading (ppm): —								
Well Casing Diameter & Material								
Type: 2" dia. PVC								
Total Well Depth (TD): 22.18	SEE LOW FLOW PURGE DATA SHEET							
Static Water Level (WL): 10.31								
One Casing Volume (gal/L): 2								
Start Purge (hrs): 0804								
End Purge (hrs): 1020								
Total Purge Time (min): 136								
Total Vol. Purged (gal/L): 2.9								

SAMPLE COLLECTION INFORMATION:

Analysis	Preservative	Container Requirements	Collected
VOCs 8260B	HCl / 4°C	(3) 40 mL Vials	
VOCs 8015B	HCl / 4°C	(2) 40 mL Vials	
SVOCs (8270C)	4° C	(2) 1 L Amber	
SVOCs (SIM)	4° C	(2) 1 L Amber	
SVOCs (8151A)	4° C	(2) 1 L Amber	
Explosives (8330)	4° C	(2) 1 L Amber	Yes
Total Metals (6020) & Total Hg (7470A)	HNO3 / 4° C	(1) 1 L HDPE	Yes
Dissolved Metals (6020) & Dis. Hg (7470A)	HNO3/ 4° C	(1) 1 L HDPE	Yes
Ammonia (350.1) & Nitrate (353.2)	H2SO4/ 4° C	(1) 1 L HDPE	Yes

OBSERVATIONS / NOTES:

PUR PRODUCER
75 ml/min + WL STILL DROPS.

Circle if Applicable:

MS/MSD	Duplicate ID No.:
—	—

Signature(s): Robert Ballover

TBD: To Be Determined

Tetra Tech NUS, Inc.

LOW FLOW PURGE DATA SHEET

PROJECT SITE NAME: NSWC CRANE
PROJECT NUMBER: N9060 CTO 0279

WELL ID.: 13MW726
DATE: 4/25/03

Time (Hrs.)	Water Level (Ft. below TOC)	Flow (mL/Min.)	Temp. (Celsius)	pH (S.U.)	Cond. (mS/cm)	DO (mg/L)	ORP (mV)	Turb. (NTU)	Comments (Volume & Color)
0804	10.31	START							CLEAR —
0807	10.51	120	12.08	6.32	0.362	5.49	+183.7	15	—
0810	11.01	120	11.93	6.13	0.358	5.13	+149.0	14	.72 L
0815	11.53	100	11.81	6.08	0.350	5.03	+156.6	10	—
0820	12.45	100	11.75	6.09	0.345	4.95	+161.7	8.6	CLEAR 1.7 L
0825	12.61	~~100~~ 75	11.76	6.07	0.343	4.87	+165.5	16	—
0830	12.89	~~100~~ 75	11.78	6.05	0.343	4.83	+166.2	33	2.5 L
0835	12.94	95	11.74	6.07	0.343	4.80	+167.1	30	SLIGHT HAZE —
0840	13.18	80	11.77	6.07	0.343	4.79	+167.9	28	3.3 L
0845	13.26	75	11.76	6.07	0.344	4.75	+169.9	30	—
0850	13.39	75	11.79	6.07	0.345	4.72	+171.2	29	7 1/2 vol. ≈ 4.1 L
0855	13.50	75	11.77	6.08	0.346	4.73	+171.5	27	—
0900	13.62	75	11.78	6.07	0.346	4.70	+173.6	25	UNABLE TO PUMP 4.85 L
0905	13.75	75	11.82	6.08	0.347	4.69	+176.0	22	LOWER THAN 75 ml/min —
0910	13.89	75	11.85	6.08	0.348	4.64	+177.2	23	PUMP SHUTS OFF. 5.6 L
0915	14.02	75	11.87	6.08	0.350	4.60	+177.4	24	—
0920	14.15	75	11.95	6.09	0.351	4.53	+178.5	23	6.35
0925	14.26	75	11.98	6.08	0.353	4.51	+179.5	22	—
0930	14.39	75	12.02	6.09	0.353	4.47	+179.8	22	7.1 L
0935	14.43	75	12.07	6.09	0.355	4.42	+181.5	17	—
0940	14.47	75	12.08	6.09	0.355	4.39	+182.4	15	7 1/2 vol. 7.85 L
0950	14.72	75	12.04	6.08	0.354	4.30	+186.0	11	—
1000	14.81	75	11.98	6.06	0.351	4.24	+187.6	8.6	9.35 L
1010	14.85	75	12.00	6.06	0.352	4.23	+188.1	8.0	—
1020	14.87	75	12.01	6.05	0.352	4.20	+189.0	7.1	10.85 L
→ END PURGE									
	SAMPLED @ 1022								

SIGNATURE(S): Robert Balkwill

7.3L = 1 vol.

18'

APPENDIX C.3.3
SWMU 16 GROUND WATER SAMPLE LOG SHEETS
ROUND 1

Tetra Tech NUS, Inc.

GROUNDWATER SAMPLE LOG SHEET

Project Site Name: NSWC CRANE
Project No.: N9060 CTO 0279

[] Domestic Well Data
[X] Monitoring Well Data
[] Other Well Type:
[] QA Sample Type:

Sample ID No.: 16GW 01 01
Sample Location: WES-14-01-03
Sampled By: T. Rojahn
C.O.C. No.: 0988
Type of Sample:
[X] Low Concentration
[] High Concentration

SAMPLING DATA:

	Color Visual	pH Standard	S.C. mS/cm	Temp. °C	Turbidity NTU	DO mg/l	Sainity %	ORP mV
Date: 4/23/03								
Time: 1130								
Method: BLADDER	CLEAR	6.40	1.606	13.79	0.05	0.32	NA	-130

PURGE DATA:

	Volume	pH	S.C.	Temp. (C)	Turbidity	DO	Salinity	ORP
Date: 4/23/03								
Method: BLADDER								
Monitor Reading (ppm): —								
Well Casing Diameter & Material								
Type: 2" PVC								
Total Well Depth (TD): 53.7	SEE LOW FLOW PURGE DATA SHEET							
Static Water Level (WL): 31.65								
One Casing Volume(gal/L): 13.5								
Start Purge (hrs): 0750								
End Purge (hrs): 1122								
Total Purge Time (min): 212								
Total Vol. Purged (gal/L): 13.5								

SAMPLE COLLECTION INFORMATION:

Analysis	Preservative	Container Requirements	Collected
VOCs 8260B	HCl / 4°C	(3) 40 mL Vials	Yes
VOCs 8015B	HCl / 4°C	(2) 40 mL Vials	Yes
SVOCs (8270C)	4°C	(2) 1 L Amber	Yes
SVOCs (SIM)	4°C	(2) 1 L Amber	Yes
SVOCs (8151A)	4°C	(2) 1 L Amber	Yes
Explosives (8330)	4°C	(2) 1 L Amber	Yes
Explosives Picrates	4°C	(2) 1 L Amber	Yes
Total Metals (6020) & Tolal Hg (7470A)	HNO3 / 4°C	(1) 1 L HDPE	Yes
Dissolved Metals (6020) & Dis. Hg (7470A)	HNO3/ 4°C	(1) 1 L HDPE	~~Yes~~ NO
Ammonia (350.1) & Nitrate (353.2)	H2SO4/ 4°C	(1) 1 L HDPE	Yes

OBSERVATIONS / NOTES:

MID SCREEN CALC. 38.8
4.73
Pump Intake @ = 43.53

WELL HAS A 5.45' SUMP & 9.45' SCREEN

Circle if Applicable:

MS/MSD	Duplicate ID No.:
—	—

Signature(s): Tony Rojahn

TBD: To Be Determined

Tetra Tech NUS, Inc.

LOW FLOW PURGE DATA SHEET

PROJECT SITE NAME: NSWC CRANE
PROJECT NUMBER: N9060 CTO O279

WELL ID.: WES-14-01-83
DATE: 4/23/03

Time (Hrs.)	Water Level (Ft. below TOC)	Flow (mL/Min.)	Temp. (Celsius)	pH (S.U.)	Cond. (mS/cm)	DO (mg/L)	ORP (mV)	Turb. (NTU)	Comments (Volume & Color)
0750	31.65	–	–	–	–	–	–	–	Start Purge
0800	33.91	200	12.33	6.28	1633	0.66	-117	320	2000 ml SI Cloudy
0810	34.40	150	11.59	6.32	1.620	0.54	-118	210	3500 ml " "
0820	34.75	55	10.94	6.32	1.582	0.87	-111	140	4050 ml " "
0830	35.10	55	11.03	6.32	1.563	0.79	-112	60	4600 ml CLEAR
0840	35.30	60	11.06	6.34	1.551	0.72	-113	30	5200 ml CLEAR
0850	35.50	55	11.17	6.35	1.548	0.67	-114	16	5750 ml CLEAR
0900	35.70	52	11.34	6.35	1.552	0.65	-115	9.5	6270 ml CLEAR
0910	35.85	50	11.62	6.36	1.563	0.63	-116	7.3	6770 ml CLEAR
0920	35.95	50	11.97	6.37	1.572	0.61	-117	6.4	7270 ml CLEAR
0930	36.05	50	12.15	6.38	1.576	0.59	-118	5.3	7770 ml CLEAR
0940	36.15	50	12.37	6.38	1.583	0.56	-119	4.4	8270 ml CLEAR
0950	36.25	50	12.65	6.38	1.589	0.53	-120	3.5	8770 ml CLEAR
1000	36.35	50	12.90	6.39	1.595	0.50	-121	2.7	9270 ml CLEAR
1010	36.68	70	13.43	6.40	1.615	0.42	-125	2.5	9970 ml CLEAR
1020	37.00	60	13.88	6.40	1.624	0.36	-128	2.2	10570 ml CLEAR
1030	36.85	40	14.51	6.40	1.653	0.37	-129	1.3	10970 ml CLEAR
1040	36.95	46	13.85	6.40	1.625	0.43	-128	0.5	11430 ml CLEAR
1050	36.95	50	14.07	6.40	1.625	0.39	-129	0.35	11930 ml CLEAR
1100	36.95	50	14.01	6.40	1.627	0.37	-130	0.05	12430 ml CLEAR
1110	36.95	50	13.83	6.40	1.616	0.33	-130	0.05	12930 ml CLEAR
1120	37.00	50	13.79	6.40	1.606	0.32	-130	0.05	13430 ml CLEAR
1122		50							13530 ml CLEAR
1130	→								Start Sampling

SIGNATURE(S): Terry Rogalski

13.5 MIN. VOL.

Tetra Tech NUS, Inc.

GROUNDWATER SAMPLE LOG SHEET

Project Site Name: NSWC CRANE
Project No.: N9060 CTO 0279

[] Domestic Well Data
[X] Monitoring Well Data
[] Other Well Type:
[] QA Sample Type:

Sample ID No.: 16GW 02 01
Sample Location: WES-14-02-23
Sampled By: B. BALKOVEC
C.O.C. No.: 0991
Type of Sample:
[X] Low Concentration
[] High Concentration

SAMPLING DATA:

	Color	pH	S.C.	Temp.	Turbidity	DO	Sainity	ORP
Date: 4/24/03	Visual	Standard	mS/cm	°C	NTU	mg/l	%	mV
Time: 1201								
Method: PERISTALTIC	CLEAR	6.65	0.508	11.80	2.2	0.44	NA	+7.1

PURGE DATA:

Date: 4/24/03	Volume	pH	S.C.	Temp. (C)	Turbidity	DO	Salinity	ORP
Method: PERISTALTIC								
Monitor Reading (ppm): —								
Well Casing Diameter & Material								
Type: 2" PVC								
Total Well Depth (TD): 28.74	SEE LOW FLOW PURGE DATA SHEET							
Static Water Level (WL): 14.86								
One Casing Volume (gal/L): 2.3								
Start Purge (hrs): 1041								
End Purge (hrs): 1200								
Total Purge Time (min): 79								
Total Vol. Purged (gal/L): 8.6 L								

SAMPLE COLLECTION INFORMATION:

Analysis	Preservative	Container Requirements	Collected
VOCs 8260B	HCl / 4°C	(3) 40 mL Vials	Yes
VOCs 8015B	HCl / 4°C	(2) 40 mL Vials	Yes
SVOCs (8270C)	4°C	(2) 1 L Amber	Yes
SVOCs (SIM)	4°C	(2) 1 L Amber	Yes
SVOCs (8151A)	4°C	(2) 1 L Amber	Yes
Explosives (8330)	4°C	(2) 1 L Amber	Yes
Explosives Picrates	4°C	(2) 1 L Amber	Yes
Total Metals (6020) & Total Hg (7470A)	HNO3 / 4°C	(1) 1 L HDPE	Yes
Dissolved Metals (6020) & Dis. Hg (7470A)	HNO3/ 4°C	(1) 1 L HDPE	~~Yes~~ NO
Ammonia (350.1) & Nitrate (353.2)	H2SO4/ 4°C	(1) 1 L HDPE	Yes

OBSERVATIONS / NOTES:

35' Sump

Circle if Applicable:

MS/MSD	Duplicate ID No.:
—	—

Signature(s): Robert Balkovec

TBD: To Be Determined

Tetra Tech NUS, Inc.

LOW FLOW PURGE DATA SHEET

PROJECT SITE NAME: NSWC CRANE
PROJECT NUMBER: N9060 CTO 0279

WELL ID.: WFS-14-02-83
DATE: 4/24/03

Time (Hrs.)	Water Level (Ft. below TOC)	Flow (mL/Min.)	Temp. (Celsius)	pH (S.U.)	Cond. (mS/cm)	DO (mg/L)	ORP (mV)	Turb. (NTU)	Comments (Volume & Color)
1041	14.86	START							CLEAR
1045	15.04	240	12.49	6.89	0.682	1.10	+9.2	11	.9L
1050	15.11	150	12.42	6.79	0.658	0.66	+1.3	10.5	1.6L
1055	15.08	100	12.39	6.83	0.654	0.70	-15.4	10	—
1100	15.06	100	12.37	6.81	0.652	0.73	-20.7	8.2	V. CLEAR 2.6L
1105	15.06	100	12.31	6.82	0.649	0.69	-10.9	7.8	—
1110	15.06	100	12.21	6.80	0.624	0.74	-2.1	6.7	3.6L
1115	15.06	100	12.18	6.77	0.617	0.81	+1.4	5.1	—
1120	15.06	100	12.12	6.76	0.613	0.93	+3.5	4.8	4.6L
1125	15.06	100	12.11	6.74	0.613	0.95	+7.1	4.4	—
1130	15.06	100	12.06	6.71	0.608	0.93	+11.0	3.4	5.6L
1135	15.06	100	11.95	6.64	0.587	0.85	+17.1	3.1	—
1140	15.05	100	12.00	6.67	0.586	0.81	+13.4	3.0	6.6L
1145	15.06	100	11.97	6.64	0.578	0.74	+10.5	2.8	—
1150	15.06	100	11.77	6.65	0.570	0.68	+8.8	2.6	7.6L
1155	15.06	100	11.76	6.64	0.570	0.67	+7.4	2.5	—
1200	15.05	100	11.80	6.65	0.568	0.64	+7.1	2.2	8.6L
→ END PURGE									
	SAMPLED @ 1201								

SIGNATURE(S): Robert Balthrop

8.5L total

Tetra Tech NUS, Inc.

GROUNDWATER SAMPLE LOG SHEET

Project Site Name: NSWC CRANE
Project No.: N9060 CTO 0279

[] Domestic Well Data
[X] Monitoring Well Data
[] Other Well Type:
[] QA Sample Type:

Sample ID No.: 16GW 02 02
Sample Location: WES-14-02-83
Sampled By: B Bauguez
C.O.C. No.: 0997
Type of Sample:
[X] Low Concentration
[] High Concentration

SAMPLING DATA:

	Color Visual	pH Standard	S.C. mS/cm	Temp. °C	Turbidity NTU	DO mg/l	Sainity %	ORP mV
Date: 5/14/03								
Time: 1732								
Method: Peristaltic	CLEAR	6.69	0.496	12.84	0.4	1.18	NA	-46.1

PURGE DATA:

	Volume	pH	S.C.	Temp. (C)	Turbidity	DO	Salinity	ORP
Date: 5/14/03								
Method: Peristaltic								
Monitor Reading (ppm): —								
Well Casing Diameter & Material Type: 2" PVC								
Total Well Depth (TD): 28.74	SEE LOW FLOW PURGE DATA SHEET							
Static Water Level (WL): 13.91								
One Casing Volume (gal/L): 2.4								
Start Purge (hrs): 1550								
End Purge (hrs): 1730								
Total Purge Time (min): 100								
Total Vol. Purged (gal/L): 2.5								

SAMPLE COLLECTION INFORMATION:

Analysis	Preservative	Container Requirements	Collected
VOCs 8260B	HCl / 4°C	(3) 40 mL Vials	~~Yes~~ No
VOCs 8015B	HCl / 4°C	(2) 40 mL Vials	~~Yes~~ No
SVOCs (8270C)	4°C	(2) 1 L Amber	Yes
SVOCs (SIM)	4°C	(2) 1 L Amber	~~Yes~~ No
SVOCs (8151A)	4°C	(2) 1 L Amber	~~Yes~~ No
Explosives (8330)	4°C	(2) 1 L Amber	~~Yes~~ No
Explosives Picrates	4°C	(2) 1 L Amber	~~Yes~~ No
Total Metals (6020) & Total Hg (7470A)	HNO3 / 4°C	(1) 1 L HDPE	Yes
Dissolved Metals (6020) & Dis. Hg (7470A)	HNO3/ 4°C	(1) 1 L HDPE	~~Yes~~ No
Ammonia (350.1) & Nitrate (353.2)	H2SO4/ 4°C	(1) 1 L HDPE	~~Yes~~ No

OBSERVATIONS / NOTES:

RE-SAMPLED

Circle if Applicable:

MS/MSD	Duplicate ID No.:
—	

Signature(s): Robert Balkwill

TBD: To Be Determined

Tetra Tech NUS, Inc.

LOW FLOW PURGE DATA SHEET

PROJECT SITE NAME: NSWC CRANE
PROJECT NUMBER: N9060 CTO 0279

WELL ID.: WES-14-02-83
DATE: 5/1/03

Time (Hrs.)	Water Level (Ft. below TOC)	Flow (mL/Min.)	Temp. (Celsius)	pH (S.U.)	Cond. (mS/cm)	DO (mg/L)	ORP (mV)	Turb. (NTU)	Comments (Volume & Color)
1550	13.94	START							CLEAR -
1555	14.09	100	14.17	6.83	0.641	4.87	-71.8	7.8	-
1600	14.09	100	13.57	6.70	0.610	1.03	-36.6	6.0	1 L
1610	14.09	95	13.43	6.73	0.594	0.59	-83.4	3.2	-
1620	14.10	95	13.11	6.77	0.567	0.53	-84.2	1.2	2.9 L
1630	14.10	95	13.14	6.79	0.547	0.79	-75.8	1.0	-
1640	14.11	95	13.20	6.79	0.531	1.00	-67.0	0.9	4.8 L
1650	14.11	95	13.12	6.78	0.517	1.39	-53.3	0.8	-
1700	14.11	95	12.88	6.74	0.508	1.32	-47.3	0.7	6.7 L
1710	14.12	95	12.86	6.70	0.498	1.21	-44.1	0.5	-
1720	14.12	95	12.85	6.69	0.499	1.20	-45.0	0.5	8.6 L
1730	14.12	95	12.84	6.69	0.496	1.18	-46.1	0.4	7 vol 4.5 L
	→ END PURGE SAMPLED @ 1732								

SIGNATURE(S): Robert Balthrop

9.2L = 1 vol

Tetra Tech NUS, Inc.

GROUNDWATER SAMPLE LOG SHEET

Project Site Name: NSWC CRANE
Project No.: N9060 CTO 0279

[] Domestic Well Data
[X] Monitoring Well Data
[] Other Well Type:
[] QA Sample Type:

Sample ID No.: 16GW 03 01
Sample Location: WIS-14-03-83
Sampled By: B BALKOVEC
C.O.C. No.: 0991
Type of Sample:
[X] Low Concentration
[] High Concentration

SAMPLING DATA:

	Color	pH	S.C.	Temp.	Turbidity	DO	Sainity	ORP
Date: 4/24/03	Visual	Standard	mS/cm	°C	NTU	mg/l	%	mV
Time: 1632								
Method: Peristaltic	CLEAR	5.84	0.483	14.17	2-8	1.63	NA	-154.2

PURGE DATA:

	Volume	pH	S.C.	Temp. (C)	Turbidity	DO	Salinity	ORP
Date: 4/24/03								
Method: Peristaltic								
Monitor Reading (ppm): —								
Well Casing Diameter & Material								
Type: 2" PVC								
Total Well Depth (TD): 38.31	SEE LOW FLOW PURGE DATA SHEET							
Static Water Level (WL): 19.53								
One Casing Volume (gal/L): 3								
Start Purge (hrs): 1433								
End Purge (hrs): 1630								
Total Purge Time (min): 117								
Total Vol. Purged (gal/L): 12.2L								

SAMPLE COLLECTION INFORMATION:

Analysis	Preservative	Container Requirements	Collected
VOCs 8260B	HCl / 4°C	(3) 40 mL Vials	Yes
VOCs 8015B	HCl / 4°C	(2) 40 mL Vials	Yes
SVOCs (8270C)	4° C	(2) 1 L Amber	Yes
SVOCs (SIM)	4° C	(2) 1 L Amber	Yes
SVOCs (8151A)	4° C	(2) 1 L Amber	Yes
Explosives (8330)	4° C	(2) 1 L Amber	Yes
Explosives Picrates	4° C	(2) 1 L Amber	Yes
Total Metals (6020) & Total Hg (7470A)	HNO3 / 4° C	(1) 1 L HDPE	Yes
Dissolved Metals (6020) & Dis. Hg (7470A)	HNO3/ 4° C	(1) 1 L HDPE	Yes
Ammonia (350.1) & Nitrate (353.2)	H2SO4/ 4° C	(1) 1 L HDPE	Yes

OBSERVATIONS / NOTES:

25' Sump

Circle if Applicable:

MS/MSD	Duplicate ID No.:
—	—

Signature(s): Robert Balkovec

TBD: To Be Determined

Tetra Tech NUS, Inc.

LOW FLOW PURGE DATA SHEET

PROJECT SITE NAME: NSWC CRANE
PROJECT NUMBER: N9060 CTO 0279

WELL ID.: WES-14-03-83
DATE: 4/24/03

Time (Hrs.)	Water Level (Ft. below TOC)	Flow (mL/Min.)	Temp. (Celsius)	pH (S.U.)	Cond. (mS/cm)	DO (mg/L)	ORP (mV)	Turb. (NTU)	Comments (Volume & Color)
1433	19.53	START							CLEAR
1435	—	170	14.74	6.33	0.501	3.65	+159.3	11	
1440	20.94	170	14.47	6.25	0.492	3.13	+156.0	13	1.2 L
1445	21.50	100	14.69	6.26	0.492	3.09	+155.6	10	—
1450	21.74	100	14.54	6.22	0.491	3.03	+157.9	11	*UNABLE TO PUMP BELOW 100 ml/min
1455	22.01	100	14.45	6.19	0.487	2.92	+156.2	11	PUMP STARTS OFF. 2.7 L
1500	22.27	100	14.34	6.17	0.485	2.81	+154.3	7.4	3.2 L
1510	23.00	100	14.30	6.20	0.483	2.60	+156.2	7.0	4.2 L
1520	23.35	100	14.26	6.01	0.483	2.31	+158.4	6.1	5.2 L
1525	23.41	100	14.18	5.96	0.481	2.18	+159.2	5.3	—
1530	23.46	100	14.11	5.94	0.481	2.10	+158.1	5.3	6.2 L
1535	23.50	100	14.00	5.92	0.481	1.98	+157.9	5.2	—
1540	23.54	100	13.94	5.92	0.481	1.93	+158.6	5.2	7.2 L
1545	23.61	100	13.92	5.91	0.480	1.87	+158.0	4.4	—
1550	23.67	100	13.91	5.90	0.480	1.80	+157.7	3.7	8.2 L
1555	23.66	100	13.97	5.88	0.481	1.74	+154.8	3.4	—
1600	23.64	100	14.10	5.87	0.483	1.72	+154.2	3.8	9.2 L
1605	23.62	100	14.22	5.87	0.483	1.70	+158.1	3.6	—
1610	23.61	100	14.14	5.86	0.482	1.65	+155.9	3.5	10.2 L
1615	23.59	100	14.18	5.84	0.483	1.64	+154.4	3.1	—
1620	23.58	100	14.18	5.85	0.483	1.65	+154.0	3.0	11.2 L
1625	23.57	100	14.17	5.84	0.482	1.64	+154.1	3.0	—
1630	23.58	100	14.17	5.84	0.483	1.63	+154.2	2.8	Final. 12.2 L
	→ END PURGE								
	SAMPLED @ 1632								

SIGNATURE(S): Robert Baltrice

11.5L = 1 vol.

Tetra Tech NUS, Inc.

GROUNDWATER SAMPLE LOG SHEET

Project Site Name: NSWC CRANE
Project No.: N9060 CTO 0279

[] Domestic Well Data
[X] Monitoring Well Data
[] Other Well Type:
[] QA Sample Type:

Sample ID No.: 16GW 04 01
Sample Location: 14-4-83
Sampled By: B. BALKOVEC
C.O.C. No.: 6988
Type of Sample:
[X] Low Concentration
[] High Concentration

SAMPLING DATA:

	Color	pH	S.C.	Temp.	Turbidity	DO	Sainity	ORP
Date: 4/23/03	Visual	Standard	mS/cm	°C	NTU	mg/l	%	mV
Time: 0811								
Method: PERISTALTIC	CLEAR	3.68	0.720	13.31	0.5	0.29	NA	+207.4

PURGE DATA:

	Volume	pH	S.C.	Temp. (C)	Turbidity	DO	Salinity	ORP
Date: 4/23/03								
Method: PERISTALTIC								
Monitor Reading (ppm): —								
Well Casing Diameter & Material Type: 2" PVC								
Total Well Depth (TD): 49.16'	SEE LOW FLOW PURGE DATA SHEET							
Static Water Level (WL): 27.83								
One Casing Volume (gal/L): 3.5								
Start Purge (hrs): 0723								
End Purge (hrs): 0810								
Total Purge Time (min): 47								
Total Vol. Purged (gal/L): 3.7								

SAMPLE COLLECTION INFORMATION:

Analysis	Preservative	Container Requirements	Collected
VOCs 8260B	HCl / 4°C	(3) 40 mL Vials	Yes
VOCs 8015B	HCl / 4°C	(2) 40 mL Vials	Yes
SVOCs (8270C)	4°C	(2) 1 L Amber	Yes
SVOCs (SIM)	4°C	(2) 1 L Amber	Yes
SVOCs (8151A)	4°C	(2) 1 L Amber	Yes
Explosives (8330)	4°C	(2) 1 L Amber	Yes
Explosives Picrates	4°C	(2) 1 L Amber	Yes
Total Metals (6020) & Total Hg (7470A)	HNO3 / 4°C	(1) 1 L HDPE	Yes
Dissolved Metals (6020) & Dis. Hg (7470A)	HNO3/ 4°C	(1) 1 L HDPE	~~Yes~~ NO
Ammonia (350.1) & Nitrate (353.2)	H2SO4/ 4°C	(1) 1 L HDPE	Yes

OBSERVATIONS / NOTES:

5' Sump
Screened 31' BGS - 40' BGS
Tubing set @ 36'

Vol = 13.2L

Circle if Applicable:

MS/MSD	Duplicate ID No.:
—	—

Signature(s): Robert Balkovec

TBD: To Be Determined

Tetra Tech NUS, Inc.

LOW FLOW PURGE DATA SHEET

PROJECT SITE NAME: NSWC CRANE
PROJECT NUMBER: N9060 CTO 0279

WELL ID.: WES-14-4-83
DATE: 4/23/03

Time (Hrs.)	Water Level (Ft. below TOC)	Flow (mL/Min.)	Temp. (Celsius)	pH (S.U.)	Cond. (mS/cm)	DO (mg/L)	ORP (mV)	Turb. (NTU)	Comments (Volume & Color)	Vol
0723	27.83	START							CLEAR	
0727	27.86	300	12.80	3.63	0.704	1.24	+218.6	1.2		
0730	27.86	300	13.05	3.67	0.714	0.78	+218.7	1.0		2.1L
0735	27.86	300	13.22	3.80	0.716	0.59	+217.3	1.1		–
0740	27.86	300	13.22	3.80	0.716	0.58	+217.8	1.0		5.1L
0745	27.86	300	13.22	3.80	0.716	0.59	+217.3	1.0		–
0750	27.86	300	13.22	3.67	0.718	0.40	+214.2	1.0		9.1L
0755	27.85	300	13.26	3.64	0.718	0.33	+213.3	0.9		–
0800	27.86	300	13.29	3.68	0.720	0.32	+211.9	1.0		11.1L
0805	27.86	300	13.30	3.67	0.720	0.30	+204.1	0.5		–
0810	27.86	300	13.31	3.68	0.720	0.29	+207.4	0.5	Tinge	14.1L
	→ END PURGE									
	SAMPLED @	0811								

SIGNATURE(S): Robert Balkum

13.2L = 1 vol

Tetra Tech NUS, Inc.

GROUNDWATER SAMPLE LOG SHEET

Project Site Name: NSWC CRANE
Project No.: N9060 CTO 0279

[] Domestic Well Data
[X] Monitoring Well Data
[] Other Well Type:
[] QA Sample Type:

Sample ID No.: 16GW 05 01
Sample Location: WES-14-05-93
Sampled By: T. ROJAHN
C.O.C. No.: 0988
Type of Sample:
[X] Low Concentration
[] High Concentration

SAMPLING DATA:

	Color	pH	S.C.	Temp.	Turbidity	DO	Sainity	ORP
Date: 4/22/03	Visual	Standard	mS/cm	°C	NTU	mg/l	%	mV
Time: 1045								
Method: BLADDER	CLEAR	4.38	0.625	12.95	0.00	0.90	—	152

PURGE DATA:

Date: 4/22/03	Volume	pH	S.C.	Temp. (C)	Turbidity	DO	Salinity	ORP
Method: BLADDER								
Monitor Reading (ppm): —								
Well Casing Diameter & Material								
Type: 2" ø PVC								
Total Well Depth (TD): 57.30	SEE LOW FLOW PURGE DATA SHEET							
Static Water Level (WL): 33.47								
One Casing Volume (gal/L): 12.8								
Start Purge (hrs): 0900								
End Purge (hrs): 1040								
Total Purge Time (min): 100								
Total Vol. Purged (gal/L): 13.7								

SAMPLE COLLECTION INFORMATION:

Analysis	Preservative	Container Requirements	Collected
VOCs 8260B	HCl / 4°C	3 X (3) 40 mL Vials	Yes
VOCs 8015B	HCl / 4°C	3 X (2) 40 mL Vials	Yes
SVOCs (8270C)	4° C	(2) 1 L Amber	Yes
SVOCs (SIM)	4° C	(2) 1 L Amber	Yes
SVOCs (8151A)	4° C	(2) 1 L Amber	Yes
Explosives (8330)	4° C	(2) 1 L Amber	Yes
Explosives Picrates	4° C	(2) 1 L Amber	Yes
Total Metals (6020) & Total Hg (7470A)	HNO3 / 4° C	3 X (1) 1 L HDPE	Yes
Dissolved Metals (6020) & Dis. Hg (7470A)	HNO3/ 4° C	(1) 1 L HDPE	~~Yes~~ NO
Ammonia (350.1) & Nitrate (353.2)	H2SO4/ 4° C	3 X (1) 1 L HDPE	Yes
SVOCs & Explosives	Extra For MS/MSD =	(14) 1 L AMBERS	YES

OBSERVATIONS / NOTES:

MID SCREEN @ 38.5
+ 4.63
PUMP INTAKE = 43.13'

WELL HAS A 5' SUMP

Circle if Applicable:

MS/MSD	Duplicate ID No.:
YES	—

TBD: To Be Determined

Signature(s): Terry Rojahn

Tetra Tech NUS, Inc.

LOW FLOW PURGE DATA SHEET

PROJECT SITE NAME: NSWC CRANE
PROJECT NUMBER: N9060 CTO 0279

WELL ID.: WES-14-05-03
DATE: 4/22/03

Time (Hrs.)	Water Level (Ft. below TOC)	Flow (mL/Min.)	Temp. (Celsius)	pH (S.U.)	Cond. (mS/cm)	DO (mg/L)	ORP (mV)	Turb. (NTU)	Comments (Volume & Color)
0900	33.47	—	—	—	—	—	—	—	0 CLEAR
0910	33.75	200	13.55	4.25	0.633	2.10	69	25	2000 CLEAR
0920	33.75	130	13.75	4.46	0.636	1.51	56	2.7	3300 CLEAR
0930	33.75	130	13.74	4.48	0.636	1.20	92	1.5	4600 CLEAR
0940	33.75	130	13.17	4.46	0.627	1.02	116	0.8	5900 CLEAR
0950	33.75	130	13.04	4.44	0.625	1.29	127	0.35	7200 CLEAR
1000	33.75	130	13.02	4.42	0.625	1.02	135	0.15	8500 CLEAR
1010	33.75	130	13.01	4.42	0.625	1.01	141	0.00	9800 CLEAR
1020	33.75	130	12.90	4.38	0.623	0.95	146	0.00	11100 CLEAR
1030	33.75	130	12.88	4.38	0.622	0.91	149	0.00	12400 CLEAR
1040	33.75	130	12.95	4.38	0.625	0.90	152	0.00	13700 CLEAR
1045	—	—	—	—	—	—	—	—	SAMPLE TIME

SIGNATURE(S): [signature]

Tetra Tech NUS, Inc.

GROUNDWATER SAMPLE LOG SHEET

Project Site Name: NSWC CRANE
Project No.: N9060 CTO 0279

[] Domestic Well Data
[X] Monitoring Well Data
[] Other Well Type:
[] QA Sample Type:

Sample ID No.: 16GW T01 01
Sample Location: 16MW T01
Sampled By: B. Balkouce
C.O.C. No.: 0988
Type of Sample:
[X] Low Concentration
[] High Concentration

SAMPLING DATA:

Date: 4/22/03 (START)	Color	pH	S.C.	Temp.	Turbidity	DO	Sainity	ORP
Time: 0800	Visual	Standard	mS/cm	°C	NTU	mg/l	%	mV
Method: PERISTALTIC	GRAY	6.51	1.061	13.01	7999	4.51	NA	+63.1

PURGE DATA:

Date: 4/21/03	Volume	pH	S.C.	Temp. (C)	Turbidity	DO	Salinity	ORP
Method: PERISTALTIC								
Monitor Reading (ppm): 0.0								
Well Casing Diameter & Material Type: 2" PVC								
Total Well Depth (TD): 26.65	SEE LOW FLOW PURGE DATA SHEET							
Static Water Level (WL): 25.61								
One Casing Volume (gal/L): .17								
Start Purge (hrs): 1522								
End Purge (hrs): 1530								
Total Purge Time (min): 8								
Total Vol. Purged (gal/L) 1.1								

SAMPLE COLLECTION INFORMATION:

Analysis	Preservative	Container Requirements	Collected
VOCs 8260B	HCl / 4°C	4/22/03 (3) 40 mL Vials	Yes
VOCs 8015B	HCl / 4°C	4/22/03 (2) 40 mL Vials	Yes
SVOCs (8270C)	4° C	(2) 1 L Amber	Yes
SVOCs (SIM)	4° C	(2) 1 L Amber	Yes
SVOCs (8151A)	4° C	(2) 1 L Amber	Yes
Explosives (8330)	4° C	(2) 1 L Amber	Yes
Explosives Picrates	4° C	(2) 1 L Amber	Yes
Total Metals (6020) & Total Hg (7470A)	HNO3 / 4° C	(1) 1 L HDPE	Yes
Dissolved Metals (6020) & Dis. Hg (7470A)	HNO3/ 4° C	(1) 1 L HDPE	Yes
Ammonia (350.1) & Nitrate (353.2)	H2SO4/ 4° C	(1) 1 L HDPE	Yes

OBSERVATIONS / NOTES:

Vol = 640 mL.

WL: 26.42 @ 0736 on 4/22/03
0800 4 VOCs 4/22/03

Circle if Applicable:

MS/MSD —

Duplicate ID No.: —

Signature(s): Robert Belkouce

TBD: To Be Determined

Tetra Tech NUS, Inc.

LOW FLOW PURGE DATA SHEET

PROJECT SITE NAME: NSWC CRANE
PROJECT NUMBER: N9060 CTO O279

WELL ID.: 16MW101
DATE: 4/24/03

Time (Hrs.)	Water Level (Ft. below TOC)	Flow (mL/Min.)	Temp. (Celsius)	pH (S.U.)	Cond. (mS/cm)	DO (mg/L)	ORP (mV)	Turb. (NTU)	Comments (Volume & Color)
1522	25.61	START							
1525	26.22	200	13.23	6.90	1.064	5.45	+74.0	>999	BRN.
1530	DRY	≈200	13.01	6.51	1.061	4.51	+63.1	>999	
		1.1L TOTAL VOL.							

SIGNATURE(S): Robert Balturer

Tetra Tech NUS, Inc.

GROUNDWATER SAMPLE LOG SHEET

Project Site Name: NSWC CRANE
Project No.: N9060 CTO 0279

[] Domestic Well Data
[X] Monitoring Well Data
[] Other Well Type:
[] QA Sample Type:

Sample ID No.: 16GWT02 01
Sample Location: 16GWT02
Sampled By: B. Balkovec
C.O.C. No.: 0988
Type of Sample:
[X] Low Concentration
[] High Concentration

SAMPLING DATA:

	Color Visual	pH Standard	S.C. mS/cm	Temp. °C	Turbidity NTU	DO mg/l	Sainity %	ORP mV
Date: 4/22/03								
Time: 0946								
Method: Peristaltic	CLEAR	6.33	0.400	11.51	3.4	0.82	NA	-7.1

PURGE DATA:

	Volume	pH	S.C.	Temp. (C)	Turbidity	DO	Salinity	ORP
Date: 4/22/03								
Method: Peristaltic								
Monitor Reading (ppm): 0.0								
Well Casing Diameter & Material Type: 2" PVC								
Total Well Depth (TD): 21.08	SEE LOW FLOW PURGE DATA SHEET							
Static Water Level (WL): 9.11								
One Casing Volume (gal/L): 1.95								
Start Purge (hrs): 0828								
End Purge (hrs): 0945								
Total Purge Time (min): 77								
Total Vol. Purged (gal/L): 2.2								

SAMPLE COLLECTION INFORMATION:

Analysis	Preservative	Container Requirements	Collected
VOCs 8260B	HCl / 4°C	(3) 40 mL Vials	Yes
VOCs 8015B	HCl / 4°C	(2) 40 mL Vials	Yes
SVOCs (8270C)	4°C	(2) 1 L Amber	Yes
SVOCs (SIM)	4°C	(2) 1 L Amber	Yes
SVOCs (8151A)	4°C	(2) 1 L Amber	Yes
Explosives (8330)	4°C	(2) 1 L Amber	Yes
Explosives Picrates	4°C	(2) 1 L Amber	Yes
Total Metals (6020) & Total Hg (7470A)	HNO3 / 4°C	(1) 1 L HDPE	Yes
Dissolved Metals (6020) & Dis. Hg (7470A)	HNO3/ 4°C	(1) 1 L HDPE	Yes
Ammonia (350.1) & Nitrate (353.2)	H2SO4/ 4°C	(1) 1 L HDPE	Yes

OBSERVATIONS / NOTES:

7.4L=1 vol

Circle if Applicable:

MS/MSD	Duplicate ID No.:
—	—

Signature(s): Robert Balkovec

TBD: To Be Determined

Tetra Tech NUS, Inc.

LOW FLOW PURGE DATA SHEET

PROJECT SITE NAME: NSWC CRANE
PROJECT NUMBER: N9060 CTO 0279

WELL ID.: 16MWT02
DATE: 4/22/03

Time (Hrs.)	Water Level (Ft. below TOC)	Flow (mL/Min.)	Temp. (Celsius)	pH (S.U.)	Cond. (mS/cm)	DO (mg/L)	ORP (mV)	Turb. (NTU)	Comments (Volume & Color)	Vol.
0828	9.11	START							LT. BROWN	
0830	9.32	200	11.07	6.96	0.395	2.66	-30.7	150	HAZY	
0835	9.48	170	11.10	6.46	0.396	0.77	-39.2	81		
0840	9.58	100	11.47	6.45	0.402	0.77	-39.6	27	CLEAR	2.5L
0845	9.56	100	11.44	6.44	0.402	0.73	-37.5	14		-
0850	9.64	100	11.61	6.43	0.402	0.69	-28.0	8.5	PUMP STOPPED @ 0846	2.5L
0855	9.66	100	11.51	6.43	0.400	0.70	-14.1	8.0	STARTED BLOWING AWAY	-
0900	9.70	125	11.49	6.43	0.402	0.71	-8.8	5.9	HAD TO READJUST FLOW	3.6L
0905	9.75	120	11.72	6.41	0.404	0.70	-5.6	5.1	+ UNPLE TO KEEP PUMP RUNNING	
0910	9.80	100	11.94	6.43	0.408	0.77	-2.8	4.8	@ 100 ml/min	≈ 4.8L
0915	9.87	100	12.31	6.37	0.413	0.81	+1.0	4.6		-
0920	9.83	100	12.35	6.37	0.414	0.83	-3.6	4.0	SLIGHTLY ↑ TOC	≈ 5.8L
0925	9.86	100	12.12	6.35	0.410	0.83	-4.1	3.7		-
0930	9.90	100	11.99	6.34	0.408	0.83	-5.3	3.4		6.8L
0935	9.94	100	11.57	6.33	0.401	0.83	-7.5	3.2		-
0940	9.96	100	11.49	6.33	0.400	0.83	-6.6	3.5	1 vol REMOVED	7.9L
0945	9.98	100	11.51	6.33	0.400	0.82	-7.1	3.4		8.3L
~~1000~~	→ END PURGE									
~~1010~~	SAMPLED @	0946								
~~1020~~										

7.4L = 1 vol

SIGNATURE(S): Robert Balkwill

Tetra Tech NUS, Inc.

GROUNDWATER SAMPLE LOG SHEET

Project Site Name: NSWC CRANE
Project No.: N9060 CTO 0279

[] Domestic Well Data
[X] Monitoring Well Data
[] Other Well Type:
[] QA Sample Type:

Sample ID No.: 16GWT03 01
Sample Location: 16MWT03
Sampled By: T. ROJAHN
C.O.C. No.: 0991
Type of Sample:
[X] Low Concentration
[] High Concentration

SAMPLING DATA:

	Color	pH	S.C.	Temp.	Turbidity	DO	Sainity	ORP
Date: 4/25/03	Visual	Standard	mS/cm	°C	NTU	mg/l	%	mV
Time: 1135								
Method: BLADDER	CLEAR	5.23	0.607	12.26	10	0.64	—	+35

PURGE DATA:

	Volume	pH	S.C.	Temp. (C)	Turbidity	DO	Salinity	ORP
Date: 4/25/03								
Method: BLADDER								
Monitor Reading (ppm): —								
Well Casing Diameter & Material								
Type: 2" PVC								
Total Well Depth (TD): 38.07	SEE LOW FLOW PURGE DATA SHEET							
Static Water Level (WL): 27.56								
One Casing Volume(gal/L): 6.8								
Start Purge (hrs): 0940								
End Purge (hrs): 1130								
Total Purge Time (min): 110								
Total Vol. Purged (gal/L): 7.2								

SAMPLE COLLECTION INFORMATION:

Analysis	Preservative	Container Requirements	Collected
VOCs 8260B	HCl / 4°C	(3) 40 mL Vials	Yes
VOCs 8015B	HCl / 4°C	(2) 40 mL Vials	Yes
SVOCs (8270C)	4°C	(2) 1 L Amber	Yes
SVOCs (SIM)	4°C	(2) 1 L Amber	Yes
SVOCs (8151A)	4°C	(2) 1 L Amber	Yes
Explosives (8330)	4°C	(2) 1 L Amber	Yes
Explosives Picrates	4°C	(2) 1 L Amber	Yes
Total Metals (6020) & Total Hg (7470A)	HNO3 / 4°C	(1) 1 L HDPE	Yes
Dissolved Metals (6020) & Dis. Hg (7470A)	HNO3/ 4°C	(1) 1 L HDPE	~~Yes~~ NO
Ammonia (350.1) & Nitrate (353.2)	H2SO4/ 4°C	(1) 1 L HDPE	Yes

OBSERVATIONS / NOTES:

Pump Intake @ 33'

Circle if Applicable:

MS/MSD —

Duplicate ID No.: —

Signature(s): [signature]

TBD: To Be Determined

Tetra Tech NUS, Inc.

LOW FLOW PURGE DATA SHEET

PROJECT SITE NAME: NSWC CRANE
PROJECT NUMBER: N9060 CTO 0279

WELL ID.: 16MWT03
DATE: 4/25/03

Time (Hrs.)	Water Level (Ft. below TOC)	Flow (mL/Min.)	Temp. (Celsius)	pH (S.U.)	Cond. (mS/cm)	DO (mg/L)	ORP (mV)	Turb. (NTU)	Comments (Volume & Color)
0940	27.56	—	—	—	—	—	—	—	Start Purge
0950	28.45	150	12.70	5.12	0.636	1.11	+70	30	1500
1000	28.60	80	12.50	5.16	0.638	1.11	+64	30	2300
1010	28.46	50	12.13	5.18	0.632	1.16	+59	36	2800
1020	28.50	55	12.09	5.21	0.628	1.00	+51	70	3350
1030	28.53	55	12.15	5.21	0.624	0.90	+45	47	3900
1040	28.55	55	12.20	5.23	0.621	0.83	+41	25	4450
1050	28.56	55	12.20	5.23	0.617	0.79	+39	20	5000
1100	28.57	55	12.20	5.23	0.614	0.74	+37	16	5550
1110	28.57	55	12.20	5.23	0.610	0.69	+36	14	6100
1120	28.58	55	12.22	5.23	0.608	0.67	+35	12	6650
1130	28.58	55	12.26	5.23	0.607	0.64	+35	10	7,200
1135	—	—	—	—	—	—	—	—	Start Sampling

SIGNATURE(S): Terry Kyle

6.8L

Tetra Tech NUS, Inc.

GROUNDWATER SAMPLE LOG SHEET

Project Site Name: NSWC CRANE
Project No.: N9060 CTO 0279

[] Domestic Well Data
[X] Monitoring Well Data
[] Other Well Type:
[] QA Sample Type:

Sample ID No.: 16GW T04 01
Sample Location: 16MW T04
Sampled By: B. BALKOVEC
C.O.C. No.: 0988
Type of Sample:
[X] Low Concentration
[] High Concentration

SAMPLING DATA:

	Color	pH	S.C.	Temp.	Turbidity	DO	Sainity	ORP
Date: 4/22/03	Visual	Standard	mS/cm	°C	NTU	mg/l	%	mV
Time: 1437								
Method: PERISTALTIC	CLEAR	6.28	0.225	12.41	9.2	5.41	NA	+79.7

PURGE DATA:

Date: 4/22/03	Volume	pH	S.C.	Temp. (C)	Turbidity	DO	Salinity	ORP
Method: PERISTALTIC								
Monitor Reading (ppm): —								
Well Casing Diameter & Material Type: 2" PVC								
Total Well Depth (TD): 22.59	SEE LOW FLOW PURGE DATA SHEET							
Static Water Level (WL): 11.13								
One Casing Volume (gal/L): 2.7								
Start Purge (hrs): 1243								
End Purge (hrs): 1435								
Total Purge Time (min): 112								
Total Vol. Purged (gal/L): 3.3								

SAMPLE COLLECTION INFORMATION:

Analysis	Preservative	Container Requirements	Collected
VOCs 8260B	HCl / 4°C	(3) 40 mL Vials	Yes
VOCs 8015B	HCl / 4°C	(2) 40 mL Vials	Yes
SVOCs (8270C)	4° C	(2) 1 L Amber	Yes
SVOCs (SIM)	4° C	(2) 1 L Amber	Yes
SVOCs (8151A)	4° C	(2) 1 L Amber	Yes
Explosives (8330)	4° C	(2) 1 L Amber	Yes
Explosives Picrates	4° C	(2) 1 L Amber	Yes
Total Metals (6020) & Total Hg (7470A)	HNO3 / 4° C	(1) 1 L HDPE	Yes
Dissolved Metals (6020) & Dis. Hg (7470A)	HNO3/ 4° C	(1) 1 L HDPE	~~Yes~~ NO
Ammonia (350.1) & Nitrate (353.2)	H2SO4/ 4° C	(1) 1 L HDPE	Yes

OBSERVATIONS / NOTES:

Vol = 10.2L

Circle if Applicable:

MS/MSD	Duplicate ID No.:
—	—

Signature(s): Robert Balkovec

TBD: To Be Determined

Tetra Tech NUS, Inc.

LOW FLOW PURGE DATA SHEET

PROJECT SITE NAME: NSWC CRANE
PROJECT NUMBER: N9060 CTO 0279

WELL ID.: 16MW704
DATE: 4/22/03

Time (Hrs.)	Water Level (Ft. below TOC)	Flow (mL/Min.)	Temp. (Celsius)	pH (S.U.)	Cond. (mS/cm)	DO (mg/L)	ORP (mV)	Turb. (NTU)	Comments (Volume & Color)
1243	11.13	START							CLOUDY BROWN
1245	11.31	130	13.27	5.41	0.634	4.32	+101.7	450	-
1250	11.64	130	13.30	5.25	0.588	3.46	+118	230	HAZY .91 L
1255	11.66	120	13.08	5.50	0.503	4.89	+99.1	50	-
1300	11.64	110	12.72	5.87	0.361	6.15	+70.4	20	SLIGHT HAZE 2.1 L
1305	11.63	110	12.36	6.10	0.318	6.77	+76.5	10	STABLE WL @ 110 ml/min —
1310	11.63	110	12.33	6.17	0.286	6.89	+84.1	10	3.2 L
1315	11.64	110	12.32	6.16	0.281	6.70	+74.5	12	—
1320	11.64	110	12.32	6.16	0.267	6.61	+83.7	17	SLIGHT HAZE 4.3 L
1325	11.66	110	12.34	6.18	0.255	6.44	+91.7	28	-
1330	11.67	110	12.36	6.18	0.251	6.28	+92.6	36	5.4 L
1335	11.66	110	12.29	6.20	0.242	6.01	+94.7	45	—
1340	11.65	110	12.30	6.19	0.240	6.00	+97.8	50	CLEANED OUT CELL 6.5 L
1345	11.66	110	12.21	6.26	0.238	6.63	+97.6	50	—
1350	11.65	110	12.45	6.22	0.238	6.14	+95.8	45	7.6 L
1355	11.66	110	12.50	6.00	0.247	6.21	+76.6	43	—
1400	11.66	110	12.52	6.21	0.242	5.46	+81.2	40	8.7 L
1405	11.67	110	12.52	6.23	0.237	5.78	+87.8	31	—
1410	11.67	110	12.44	6.26	0.226	5.57	+91.2	17	9.8
1415	11.67	110	12.38	6.28	0.222	5.47	+85.2	13	—
1420	11.66	110	12.40	6.28	0.224	5.43	+84.7	12	≥1 vol. 10.4 L
1425	11.65	110	12.39	6.28	0.225	5.42	+82.9	9.4	—
1430	11.66	110	12.41	6.28	0.224	5.40	+80.2	9.7	12 L
1435	11.67	110	12.41	6.28	0.225	5.41	+79.7	9.2	≥ 12.6 L
→ END PURGE									
	SAMPLED @ 1437								

10.2 L. 1 vol

SIGNATURE(S): Robert Bultman

PAGE___OF___

Tetra Tech NUS, Inc.

GROUNDWATER SAMPLE LOG SHEET

Project Site Name: NSWC CRANE
Project No.: N9060 CTO 0279

[] Domestic Well Data
[X] Monitoring Well Data
[] Other Well Type:
[] QA Sample Type:

Sample ID No.: 16GWT05 01
Sample Location: 16MWT05
Sampled By: T. ROJAHN
C.O.C. No.: 0991
Type of Sample:
[X] Low Concentration
[] High Concentration

SAMPLING DATA:

	Color Visual	pH Standard	S.C. mS/cm	Temp. °C	Turbidity NTU	DO mg/l	Sainity %	ORP mV
Date: 4/24/03								
Time: 1300								
Method: SAMPLE	CLEAR	4.42	0.684	14.47	6.8	0.20	—	+185

PURGE DATA:

	Volume	pH	S.C.	Temp. (C)	Turbidity	DO	Salinity	ORP
Date: 4/24/03								
Method: BLADDER								
Monitor Reading (ppm): —								
Well Casing Diameter & Material								
Type: 2" Ø PVC								
Total Well Depth (TD): 41.82	SEE LOW FLOW PURGE DATA SHEET							
Static Water Level (WL): 30.68								
One Casing Volume(gal/L): 7								
Start Purge (hrs): 1045								
End Purge (hrs): 1255								
Total Purge Time (min): 130								
Total Vol. Purged (gal/L): 14.3								

SAMPLE COLLECTION INFORMATION:

Analysis	Preservative	Container Requirements		Collected
VOCs 8260B	HCl / 4°C	2 X	(3) 40 mL Vials	Yes
VOCs 8015B	HCl / 4°C	2 X	(2) 40 mL Vials	Yes
SVOCs (8270C)	4° C	2 X	(2) 1 L Amber	Yes
SVOCs (SIM)	4° C	2 X	(2) 1 L Amber	Yes
SVOCs (8151A)	4° C	2 X	(2) 1 L Amber	Yes
Explosives (8330)	4° C	2 X	(2) 1 L Amber	Yes
Explosives Picrates	4° C	2 X	(2) 1 L Amber	Yes
Total Metals (6020) & Total Hg (7470A)	HNO3 / 4° C	2 X	(1) 1 L HDPE	Yes
Dissolved Metals (6020) & Dis. Hg (7470A)	HNO3/ 4° C	—	(1) 1 L HDPE	~~Yes~~ NO
Ammonia (350.1) & Nitrate (353.2)	H2SO4/ 4° C	2 X	(1) 1 L HDPE	Yes

OBSERVATIONS / NOTES:

MID. SCREEN = 36.82

Circle if Applicable:

MS/MSD	Duplicate ID No.:
—	FD04240301

Signature(s): [signature]

TBD: To Be Determined

Tetra Tech NUS, Inc.

LOW FLOW PURGE DATA SHEET

PROJECT SITE NAME: NSWC CRANE
PROJECT NUMBER: N9060 CTO 0279

WELL ID.: 16MW T05
DATE: 4/24/03

Time (Hrs.)	Water Level (Ft. below TOC)	Flow (mL/Min.)	Temp. (Celsius)	pH (S.U.)	Cond. (mS/cm)	DO (mg/L)	ORP (mV)	Turb. (NTU)	Comments (Volume & Color)
1045	30.68	—	—	—	—	—	—	—	START PURGE
1055	30.90	110	14.82	4.19	0.698	1.48	+149	50	1100 V. SL. CLOUDY
1105	30.82	110	14.78	4.34	0.702	0.88	+154	55	2200 " " "
1115	30.82	110	14.64	4.40	0.689	0.66	+152	55	3300 " " "
1125	30.82	110	14.55	4.46	0.681	0.44	+150	55	4400 " " "
1135	30.82	110	14.54	4.48	0.664	0.38	+152	50	5500 " " "
1145	30.82	110	14.53	4.48	0.646	0.31	+154	50	6600 " " "
1155	30.82	110	14.11	4.49	0.609	0.47	+157	45	7700 CLEAR
1205	30.82	110	14.10	4.50	0.610	0.30	+160	34	8800 CLEAR
1215	30.82	110	14.10	4.49	0.678	0.24	+164	26	9900 CLEAR
1225	30.82	110	14.24	4.48	0.671	0.23	+169	21	11000 CLEAR
1235	30.82	110	14.38	4.45	0.674	0.22	+175	16	12100 CLEAR
1245	30.82	110	14.44	4.43	0.677	0.21	+181	12	13200 CLEAR
1255	30.82	110	14.47	4.42	0.654	0.20	+185	6.8	14300 CLEAR
1300	—	—	—	—	—	—	—	—	START SAMPLING

7.0 L = MIN. VOL.

SIGNATURE(S): [signature]

Tetra Tech NUS, Inc.

GROUNDWATER SAMPLE LOG SHEET

Project Site Name: NSWC CRANE
Project No.: N9060 CTO 0279

[] Domestic Well Data
[X] Monitoring Well Data
[] Other Well Type:
[] QA Sample Type:

Sample ID No.: 16GW~~T~~06 01
Sample Location: 16MWT06
Sampled By: T. ROSAHN
C.O.C. No.: 0994
Type of Sample:
[X] Low Concentration
[] High Concentration

SAMPLING DATA:

	Color	pH	S.C.	Temp.	Turbidity	DO	Sainity	ORP
Date: 4/28/03	Visual	Standard	mS/cm	°C	NTU	mg/l	%	mV
Time: 0932								
Method: SAME	CLEAR	7.70	0.516	15.00	8.8	0.48	~~106~~ TBD	-106

PURGE DATA:

Date: 4/28/03	Volume	pH	S.C.	Temp. (C)	Turbidity	DO	Salinity	ORP
Method: Peristaltic								
Monitor Reading (ppm): —								
Well Casing Diameter & Material								
Type: 2"Ø PVC								
Total Well Depth (TD): 28.28	SEE LOW FLOW PURGE DATA SHEET							
Static Water Level (WL): 25.25								
One Casing Volume(gal/L) 1.9								
Start Purge (hrs): 0835								
End Purge (hrs): 0930								
Total Purge Time (min): 55								
Total Vol. Purged (gal/L) 4.9								

SAMPLE COLLECTION INFORMATION:

Analysis	Preservative	Container Requirements		Collected
VOCs 8260B	HCl / 4°C	(3) 40 mL Vials	4/29	Yes
VOCs 8015B	HCl / 4°C	(2) 40 mL Vials	4/29	Yes
SVOCs (8270C)	4° C	2 ~~(2)~~ 1 L Amber	4/29	Yes
SVOCs (SIM)	4° C	1 ~~(2)~~ 1 L Amber	4/28	Yes
SVOCs (8151A)	4° C	1 ~~(2)~~ 1 L Amber	4/28	Yes
Explosives (8330)	4° C	1 ~~(2)~~ 1 L Amber	4/29	Yes
Explosives Picrates	4° C	1 ~~(2)~~ 1 L Amber	4/28	Yes
Total Metals (6020) & Tolal Hg (7470A)	HNO3 / 4° C	(1) 1 L HDPE	4/28	Yes
Dissolved Metals (6020) & Dis. Hg (7470A)	HNO3/ 4° C	(1) 1 L HDPE	—	~~Yes~~ NO
Ammonia (350.1) & Nitrate (353.2)	H2SO4/ 4° C	(1) 1 L HDPE	4/28	Yes

OBSERVATIONS / NOTES:

Circle if Applicable:

MS/MSD —

Duplicate ID No.: —

Signature(s): Troy Rosahn

TBD: To Be Determined

Tetra Tech NUS, Inc.

LOW FLOW PURGE DATA SHEET

PROJECT SITE NAME: NSWC CRANE
PROJECT NUMBER: N9060 CTO 0279

WELL ID.: 16 MWT06
DATE: 4/28/03

Time (Hrs.)	Water Level (Ft. below TOC)	Flow (mL/Min.)	Temp. (Celsius)	pH (S.U.)	Cond. (mS/cm)	DO (mg/L)	ORP (mV)	Turb. (NTU)	Comments (Volume & Color)
0835	25.25	—							start Purge
0845	25.67	130	14.80	6.96	0.452	0.11	-51	350	650 ml BRN
0850	25.77	90							1300 } Surveyors Arrive
0855	25.90	90							1750 } let them in gate
0900	26.05	90							2200
0905	26.18	90	14.61	7.49	0.484	0.27	-86	45	2650 CLEAR
0910	26.28	90	14.80	7.52	0.490	0.32	-92	35	3100 "
0915	26.40	90	14.78	7.49	0.498	0.37	-98	25	3550 "
0920	26.51	90	15.00	7.70	0.502	0.44	-102	16	4000 "
0925	26.61	90	14.81	7.70	0.511	0.46	-105	9.8	4450 "
0930	26.73	90	15.00	7.70	0.516	0.48	-106	8.8	4900 "
0932	—	—	—	—	—	—	—	—	start Sampling
1015	—	—	—	—	—	—	—	—	(Dry)
* 4/29/03									
1000	26.35								
1002	~~DRY~~ 26	—	—	—	—	—	—	—	start Sampling
1037	DRY		~3L	Collected					

SIGNATURE(S): [signature]

PAGE 2 OF 2

Tetra Tech NUS, Inc.

GROUNDWATER SAMPLE LOG SHEET

Project Site Name: NSWC CRANE
Project No.: N9060 CTO 0279

[] Domestic Well Data
[X] Monitoring Well Data
[] Other Well Type:
[] QA Sample Type:

Sample ID No.: 16GW10602
Sample Location: 16MW106
Sampled By: B. BALKOVIC
C.O.C. No.: 0997
Type of Sample:
[X] Low Concentration
[] High Concentration

SAMPLING DATA:

	Color Visual	pH Standard	S.C. mS/cm	Temp. °C	Turbidity NTU	DO mg/l	Sainity %	ORP mV
Date: 5/11/03								
Time: 1310								
Method: PERISTALTIC	[redacted]	6.43	0.460	14.21	43.01	6.44	NA	-117.1

PURGE DATA: MAZE

	Volume	pH	S.C.	Temp. (C)	Turbidity	DO	Salinity	ORP
Date: 5/11/03								
Method: PERISTALTIC								
Monitor Reading (ppm): —								
Well Casing Diameter & Material								
Type: 2" PVC								
Total Well Depth (TD): 28.30	SEE LOW FLOW PURGE DATA SHEET							
Static Water Level (WL): 15.70								
One Casing Volume(gal/L): 2.1								
Start Purge (hrs): 0908								
End Purge (hrs): 1308								
Total Purge Time (min): 240								
Total Vol. Purged (gal/L): 8								

SAMPLE COLLECTION INFORMATION:

Analysis	Preservative	Container Requirements	Collected
VOCs 8260B	HCl / 4°C	(3) 40 mL Vials	~~Yes~~ NO
VOCs 8015B	HCl / 4°C	(2) 40 mL Vials	~~Yes~~ NO
SVOCs (8270C)	4°C	(2) 1 L Amber	Yes
SVOCs (SIM)	4°C	(2) 1 L Amber	~~Yes~~ NO
SVOCs (8151A)	4°C	(2) 1 L Amber	~~Yes~~
Explosives (8330)	4°C	(2) 1 L Amber	~~Yes~~
Explosives Picrates	4°C	(2) 1 L Amber	~~Yes~~
Total Metals (6020) & Total Hg (7470A)	HNO3 / 4°C	(1) 1 L HDPE	~~Yes~~
Dissolved Metals (6020) & Dis. Hg (7470A)	HNO3/ 4°C	(1) 1 L HDPE	~~Yes~~
Ammonia (350.1) & Nitrate (353.2)	H2SO4/ 4°C	(1) 1 L HDPE	~~Yes~~

OBSERVATIONS / NOTES:

Circle if Applicable:

MS/MSD	Duplicate ID No.:
—	—

Signature(s): Robert Balkovic

TBD: To Be Determined

Tetra Tech NUS, Inc.

LOW FLOW PURGE DATA SHEET

PROJECT SITE NAME: NSWC CRANE
PROJECT NUMBER: N9060 CTO 0279

WELL ID.: 16MW06
DATE: 5/11/03

Time (Hrs.)	Water Level (Ft. below TOC)	Flow (mL/Min.)	Temp. (Celsius)	pH (S.U.)	Cond. (mS/cm)	DO (mg/L)	ORP (mV)	Turb. (NTU)	Comments (Volume & Color)
0908	15.70	START							
0915	16.60	150	13.56	6.04	0.885	9.03	+93.6	13.6	
0935	19.00	150	13.25	6.72	0.863	8.05	+88.7	5.0	
0945	19.56	150	12.66	6.70	0.835	9.30	+88.0	45.1	
0955	20.00	150	13.40	6.68	0.839	9.17	+82.3	14.2	
1005	20.23	85	13.52	6.64	0.837	8.45	+78.7	200.7	
1015	21.10	420							X INCREASE RATE TO PUMP WELL DRY
1025	22.01	420	12.43	6.67	0.837	9.63	+79.3	53.1	BASED ON HISTORICAL INFO.
1035	22.75	85	12.91	6.71	0.857	8.40	+84.4	58.6	
1045	23.98	85	13.41	6.77	0.921	8.00	+90.1	111.7	≈WELL NOT DRAWING DOWN, WILL
1100	23.11	85	14.68	6.83	0.943	7.15	+93.9	146.1	GEAR RATE DOWN TO SEE IF WELL
1130	24.05	85	17.01	6.85	0.999	6.70	+96.4	72.1	STABILIZES
1200	25.10	85	14.51	6.90	0.965	6.82	+100.7	64.1	
1230	26.00	85	14.25	6.98	0.960	6.89	+104.7	55.3	
1308	26.31	85	14.20	6.93	0.960	6.94	+117.1	43.1	4 HRS
	→ END PURGE								
	SAMPLED @	1310							

SIGNATURE(S): Robert Balkwill

APPENDIX C.3.2
SWMU 13 GROUND WATER SAMPLE LOG SHEETS
ROUND 2

Tetra Tech NUS, Inc.

GROUNDWATER SAMPLE LOG SHEET

Project Site Name: NSWC CRANE, SWMU13
Project No.: N9060 CTO 0279

[] Domestic Well Data
[X] Monitoring Well Data
[] Other Well Type:
[] QA Sample Type:

Sample ID No.: 13GWT0102
Sample Location: 13GWT01
Sampled By: Goerdt
C.O.C. No.: 4825
Type of Sample:
[X] Low Concentration
[] High Concentration

SAMPLING DATA:

Date: 11-23-03	Color (Visual)	pH (S. U.)	S.C. (mS/cm)	Temp. (°C)	Turbidity (NTU)	DO (mg/l)	ORP (mV)	Other NA
Time: 1320								
Method: Peristaltic	Clear	4.17	0.233	17.04	4.39	1.40	385.4	---

PURGE DATA:

Date: 11-23-03	Volume	pH	S.C.	Temp. (C)	Turbidity	DO	Salinity	Other
Method: Peristaltic								
Monitor Reading (ppm): –								
Well Casing Diameter & Material								
Type: 2" Ø PVC			See Low Flow Purge Data Sheets					
Total Well Depth (TD): 17.95								
Static Water Level (WL): 7.95								
One Casing Volume(gal/L): 6.17								
Start Purge (hrs): 1215								
End Purge (hrs): 1315								
Total Purge Time (min): 60								
Total Vol. Purged (gal/L): 6.7								

SAMPLE COLLECTION INFORMATION:

Analysis	Preservative	Container Requirements	Collected
Explosives SW-846 8330	4°C	(2) L Glass Amber	Yes
Micellaneous Explosives SW-846 8330	4°C	(2) L Glass Amber	Yes
Total Metals SW846 6020/Mercury 7470A	4°C/HNO_3	(1) L HDPE	Yes
Diss. Metals SW846 6020/Mercury 7470A	4°C/HNO_3	(1) L HDPE	No
Nitrate + Nitrite (asN) EPA 353.2 & Ammonia (asN) EPA 350.1	4°C/H_2SO_4	(1) L HDPE	Yes
Total Organic Carbon	4°C/H_3PO_4	(2) 40ml Vails	No

OBSERVATIONS / NOTES:

Filtered Sample Collected Yes[] No[X]

17.95
7.95
10.00 (.163) = 1.63 gal = 6.17 L

Circle if Applicable:

MS/MSD

Duplicate ID No.: —

Signature(s):

Tetra Tech NUS, Inc.

LOW FLOW PURGE DATA SHEET

PROJECT : NSWC CRANE
PROJECT NUMBER: N9060
PROJECT SITE NAME: SWMU 13

WELL ID.: 13GWT01
DATE: 11-23-03
WEATHER: Cloudy 50°

Time (Hrs.)	Water Level (Ft. below TOC)	Volume (gal/L)	Flowrate (mL/min)	pH (S.U.)	Cond. (mS/cm)	Turb. (NTU)	DO (mg/L)	Temp. (Celsius)	ORP (mV)	Comments
1215	7.95	–	–	–	–	–	–	–	–	Start Purge
1225	8.47	1.3	1300	4.27	0.225	6.61	2.44	16.92	354.0	Clear
1235	8.60	2.5	1200	4.23	0.228	6.41	1.92	17.01	369.2	"
1245	8.63	3.7	1200	4.20	0.229	4.89	1.71	16.98	377.8	"
1255	8.65	4.7	1000	4.20	0.230	4.01	1.58	17.02	381.1	"
1305	8.65	5.7	1000	4.18	0.232	3.52	1.47	17.10	383.9	"
1315	8.65	6.7	1000	4.17	0.233	4.39	1.40	17.04	385.4	Stop purge

Water Quality Meter (S/N) 98F0478 AB
Control Box Type (S/N) N/A
Turbidity Meter (S/N) 0920 4298

Pump Intake Depth ~~12.9'~~

SIGNATURE(S): [signature]

Tetra Tech NUS, Inc.

GROUNDWATER SAMPLE LOG SHEET

Project Site Name: NSWC CRANE, SWMU13
Project No.: N9060 CTO 0279

[] Domestic Well Data
[X] Monitoring Well Data
[] Other Well Type:
[] QA Sample Type:

Sample ID No.: 13GWT0202
Sample Location: 13GWT02
Sampled By: Goerdt
C.O.C. No.: 4833
Type of Sample:
[X] Low Concentration
[] High Concentration

SAMPLING DATA:

	Color (Visual)	pH (S. U.)	S.C. (mS/cm)	Temp. (°C)	Turbidity (NTU)	DO (mg/l)	ORP (mV)	Other NA
Date: 12-7-03.								
Time: 0850								
Method: Peristaltic	Clear	5.25	1.230	10.43	6.62	5.75	157.9	---

PURGE DATA:

	Volume	pH	S.C.	Temp. (C)	Turbidity	DO	Salinity	Other
Date: 12-6-03								
Method: Peristaltic								
Monitor Reading (ppm): —								
Well Casing Diameter & Material								
Type: 2" Ø PVC			See Low Flow Purge Data Sheets					
Total Well Depth (TD): 29.50								
Static Water Level (WL): 20.05								
One Casing Volume(gal/L): 5.8								
Start Purge (hrs): 1210								
End Purge (hrs): 1345								
Total Purge Time (min): 95								
Total Vol. Purged (gal/L): 19								

SAMPLE COLLECTION INFORMATION:

Analysis	Preservative	Container Requirements	Collected
Explosives SW-846 8330	4°C	(2) L Glass Amber	Yes
Micellaneous Explosives SW-846 8330	4°C	(2) L Glass Amber	Yes
Total Metals SW846 6020/Mercury 7470A	4°C/HNO_3	(1) L HDPE	Yes
Diss. Metals SW846 6020/Mercury 7470A	4°C/HNO_3	(1) L HDPE	No
Nitrate + Nitrite (asN) EPA 353.2 & Ammonia (asN) EPA 350.1	4°C/H_2SO_4	(1) L HDPE	Yes
Total Organic Carbon	4°C/H_3PO_4	(2) 40ml Vails	No

OBSERVATIONS / NOTES:

Filtered Sample Collected Yes[] No[]

Well was purged on 12/6/03.
Sampled on 12/7/03 @ 0850

Circle if Applicable:

MS/MSD	Duplicate ID No.:
—	—

Signature(s): [signature]

Note: Analyte, method, and/or equipment may be deleted from form if not being performed.

Tetra Tech NUS, Inc.

FIELD ANALYTICAL LOG SHEET
GEOCHEMICAL PARAMETERS

Project Site Name: NSWC CRANE
Project No.: N9060 CTO 279
Sampled By: Goerdt
Field Analyst: Goerdt
Field Form Checked as per QA/QC Checklist (initials): TR

Sample ID No.: 13GWT0202
Sample Location: 13GWT02
Duplicate: ☐
Blank: ☐

SAMPLING DATA:

	Color (Visual)	pH (S.U.)	S.C. (mS/cm)	Temp. (°C)	Turbidity (NTU)	DO (mg/l)	Salinity (%)	ORP (Eh) (+/- mv)
Date: 12-7-03								
Time: 0850								
Method: Peristaltic	Clear	5.25	1.230	10.43	6.62	5.75	~~15~~ 8.0	157.9

SAMPLE COLLECTION/ANALYSIS INFORMATION:

ORP (Eh) (+/- mv)
Electrode Make & Model: YSI
Reference Electrode (circle one): Silver-Silver Chloride / Calomel / Hydrogen

Dissolved Oxygen:
Equipment: Chemetrics Test Kit
Concentration: 4.0 ppm

Range Used:	Range	Method	Concentration ppm
☐	0 to 1 ppm	K-7510	
☑	1 to 12 ppm	K-7512	4.0

Analysis Time: 0917

Notes:

Alkalinity:
Equipment: Chemetrics Test Kit
Concentration: < 10 ppm

Range Used:	Range	Method	Concentration ppm
☑	10 to 100 ppm	K-9810	< 10
☐	50 to 500 ppm	K-9815	
☐	100 to 1000 ppm	K-9820	

Analysis Time: 0929
Filtered: ☐

Notes:

Carbon Dioxide:
Equipment: Chemetrics Test Kit
Concentration: 40 ppm

Range Used:	Range	Method	Concentration ppm
☑	10 to 100 ppm	K-1910	40
☐	100 to 1000 ppm	K-1920	
☐	250 to 2500 ppm	K-1925	

Analysis Time: 0934

Notes:

Ferrous Iron (Fe^{2+}):
Equipment: DR-850 DR-8 __ Range: 0 - 3.00 mg/L
Program/Module: 500nm 33
Concentration: 2.05 ppm
Analysis Time: 0942
Filtered: ☐

Notes:

Hydrogen Sulfide (H_2S): Range: 0 - 5 mg/L
Equipment: HS-C Other: _____
Exceeded 5.0 mg/L range on color chart: ☐
Concentration: 0.0 ppm
Analysis Time: 0949

Notes:

Note: Analyte, method, and/or equipment may be deleted from form if not being performed.

FIELD ANALYTICAL LOG SHEET
GEOCHEMICAL PARAMETERS

Tetra Tech NUS, Inc.

Project Site Name:	NSWC CRANE	Sample ID No.:	13GWT0202
Project No.:	N9060 CTO 279	Sample Location:	13GWT02
Sampled By:	Goeydt	Duplicate:	☐
Field Analyst:	Goeydt	Blank:	☐

Sulfide (S^{2-}):

Equipment: DR-850 DR-8 _ _ Range: 0 - 0.70 mg/L Concentration: 0.0 ppm

Program/Module: 610nm 93 Analysis Time: 0959 Filtered: ☐

Notes:

Nitrite (NO_2^--N): Concentration: 0.003 ppm

Equipment: DR-850 DR-8 _ _ Range: 0 - 0.350 mg/L Analysis Time: 0922 Filtered: ☐

Program/Module: 62

Standard Solution: ☐ Results: _____ Reagent Blank Correction: ☐

Notes:

Manganese (Mn^{2+}): Concentration: 5.4 ppm

Equipment: DR-850 DR-8 _ _ Range: 0 - 20.0 mg/L Analysis Time: 1007 Filtered: ☐

Program/Module: 525nm 41

Notes:

QA/QC Checklist:

All data fields have been completed as necessary: ☑

Correct measurement units are cited in the SAMPLING DATA block: ☑

Values cited in the SAMPLING DATA block are consistent with the Groundwater Sample Log Sheet: ☑

Mulitplication is correct for each *Multiplier* table: ☑

Final calulated concentration is within the appropriate *Range Used* block: ☑

Alkalinity *Relationship* is determined appropriatly as per manufacturer (HACH) instructions: ☑

QA/QC sample (e.g., Std. Additions, etc.) frequency is appropriate as per the project planning documents: ☑

Nitrite Interference treatment was used for Nitrate test if Nitrite was detected: ~~☐~~ NA

Title block on ~~each~~ 1st page of form is initialized by person who performed this QA/QC Checklist: ☑

Tetra Tech NUS, Inc.

GROUNDWATER SAMPLE LOG SHEET

Project Site Name: NSWC CRANE, SWMU13
Project No.: N9060 CTO 0279

[] Domestic Well Data
[X] Monitoring Well Data
[] Other Well Type:
[] QA Sample Type:

Sample ID No.: 13GWT0302
Sample Location: 13MWT03
Sampled By: TR/FW
C.O.C. No.: 4820
Type of Sample:
[X] Low Concentration
[] High Concentration

SAMPLING DATA:

	Color (Visual)	pH (S. U.)	S.C. (mS/cm)	Temp. (°C)	Turbidity (NTU)	DO (mg/l)	ORP (mV)	Other NA
Date: 11/11/03								
Time: 0925								
Method: SAME	CLOUDY	5.37 ~~0.487~~	0.487	18.00	328	4.45	+345	--

PURGE DATA:

	Volume	pH	S.C.	Temp. (C)	Turbidity	DO	Salinity	Other
Date: 11-10-03								
Method: Peristaltic								
Monitor Reading (ppm): -								
Well Casing Diameter & Material								
Type: 2" Ø PVC			See Low Flow Purge Data Sheets					
Total Well Depth (TD): 18.05								
Static Water Level (WL): 12.55								
One Casing Volume(gal/L): 3.4								
Start Purge (hrs): 1005								
End Purge (hrs): 1209								
Total Purge Time (min): 124								
Total Vol. Purged (gal/L): 10.9								

SAMPLE COLLECTION INFORMATION:

Analysis	Preservative	Container Requirements	Collected
Explosives SW-846 8330	4°C	(2) L Glass Amber	Yes
Micellaneous Explosives SW-846 8330	4°C	(2) L Glass Amber	Yes
Total Metals SW846 6020/Mercury 7470A	4°C/HNO_3	(1) L HDPE	Yes
Diss. Metals SW846 6020/Mercury 7470A	4°C/HNO_3	(1) L HDPE	YES
Nitrate + Nitrite (asN) EPA 353.2 & Ammonia (asN) EPA 350.1	4°C/H_2SO_4	(1) L HDPE	Yes
Total Organic Carbon	4°C/H_3PO_4	(2) 40ml Vails	YES

OBSERVATIONS / NOTES:

Filtered Sample Collected Yes[X] No[]

18.05 - 12.55 = 5.5 x 0.163 = 0.9 gal or 3.4L

Intake near bottom - Historically well draws down

Circle if Applicable:

MS/MSD	Duplicate ID No.:
—	—

Signature(s): [signature]

Tetra Tech NUS, Inc.

LOW FLOW PURGE DATA SHEET

PROJECT SITE NAME: NSWC CRANE
PROJECT NUMBER: N9060, CTO 0279

WELL ID.: 13MWT03 ~~13GW0202~~ TR
DATE: 11/10/03

Time (Hrs.)	Water Level (Ft. below TOC)	Flow (mL/Min.)	pH (S.U.)	Cond. (mS/cm)	Turb. (NTU)	DO (mg/L)	Temp. (Celsius)	Salinity (%)	ORP (mV)	Comments (Volume & Color)
1005	12.55	–	–	–	–	–	–	–	–	Start Purge
1015	13.17	100	5.67	0.447	43.7	6.92	16.23	–	199	1000 CLEAR
1025	13.73	90	5.64	0.442	42.1	6.55	16.68	–	226	1900 "
1035	14.29	90	5.54	0.442	23.4	6.15	16.49	–	243	2800 "
1045	14.61	90	5.49	0.441	12.3	5.70	16.33	–	261	3700 "
1055	14.89	90	5.44	0.440	8.16	5.37	16.21	–	280	4600 "
1105	15.22	90	5.46	0.447	5.35	5.12	16.53	–	284	5500 "
1115	15.57	90	5.43	0.459	4.65	4.81	16.74	–	291	6400 "
1125	15.91	90	5.40	0.468	12.8	4.49	16.98	–	297	7300 "
1135	16.25	90	5.18	0.480	54.9	3.73	17.55	–	315	8200 "
1145	16.60	90	5.04	0.494	43.3	3.12	17.86	–	338	9100 "
1155	16.95	90	5.16	0.485	112	3.97	18.01	–	346	10000 SL CLOUDY
1205	17.21	90	5.32	0.487	328	4.45	18.00	–	345	10900 CLOUDY
1209	DRY	–	–	–	–	–	–	–	–	DRY will sample 11/11

SIGNATURE(S): [signature]

Note: Analyte, method, and/or equipment may be deleted from form if not being performed.

FIELD ANALYTICAL LOG SHEET
GEOCHEMICAL PARAMETERS

Tetra Tech NUS, Inc.

Project Site Name: NSWC CRANE

Project No.: 9060

Sampled By: TK/FW

Field Analyst: TK/FW

Field Form Checked as per QA/QC Checklist (initials): TK

Sample ID No.: 13GWT0302

Sample Location: 13MWT03

Duplicate: ☐

Blank: ☐

SAMPLING DATA: CLEAR 11/11 ↑ ↑ 57.4 11/11

Date: 11/11/03	Color	pH	S.C.	Temp.	Turbidity	DO	Salinity	ORP (Eh)
Time: 0925	(Visual)	(S.U.)	(mS/cm)	(°C)	(NTU)	(mg/l)	(%)	(+/- mv)
Method: Peristaltic	Cloudy	5.32	0.487	18.00	328	4.45	—	+345

← 11/10 Purge Data

SAMPLE COLLECTION/ANALYSIS INFORMATION:

ORP (Eh) (+/- mv)

Electrode Make & Model: YSI

Reference Electrode (circle one): Silver-Silver Chloride / Calomel / Hydrogen

Dissolved Oxygen:

Equipment: Chemetrics Test Kit

Concentration: 6 ppm

Range Used:	Range	Method	Concentration ppm
☑	0 to 1 ppm	K-7510	
☑	1 to 12 ppm	K-7512	6

Analysis Time: 0947

Notes:

Alkalinity: FW

Equipment: Chemetrics Test Kit

Concentration: <10 ppm

Range Used:	Range	Method	Concentration ppm
☑	10 to 100 ppm	K-9810	<10
☐	50 to 500 ppm	K-9815	
☐	100 to 1000 ppm	K-9820	

Analysis Time: 0955

Filtered: ☐

Notes: At 23ppm colorless ... No Green Color

Carbon Dioxide: FW

Equipment: Chemetrics Test Kit

Concentration: 50 ppm

Range Used:	Range	Method	Concentration ppm
☑	10 to 100 ppm	K-1910	50
☐	100 to 1000 ppm	K-1920	
☐	250 to 2500 ppm	K-1925	

Analysis Time: 0949

Notes:

Ferrous Iron (Fe^{2+}): TK

Equipment: DR-850 DR-8 90 Range: 0 - 3.00 mg/L

Program/Module: 500nm 33

Concentration: 0.03 ppm

Analysis Time: 1019

Filtered: ☐

Notes:

Hydrogen Sulfide (H_2S): TK

Range: 0 - 5 mg/L

Equipment: HS-C Other:

Exceeded 5.0 mg/L range on color chart: ☐

Concentration: 0.0 ppm

Analysis Time: 1002

Notes:

Note: Analyte, method, and/or equipment may be deleted from form if not being performed.

Tetra Tech NUS, Inc.

FIELD ANALYTICAL LOG SHEET
GEOCHEMICAL PARAMETERS

Project Site Name: NSWC CRANE
Project No.: 9060
Sampled By: FW / TR
Field Analyst: FW / TR

Sample ID No.: 13GWT0302
Sample Location: 13MWT03
Duplicate: ☐
Blank: ☐

Sulfide (S^{2-}):

Equipment: DR-850 DR-8 90 Range: 0 - 0.70 mg/L
Program/Module: 610nm 93
Concentration: 0.06 ~~0.006~~ ppm TR
Analysis Time: 1026 Filtered: ☐
Notes:

Nitrite (NO_2^--N):

Equipment: DR-850 DR-8 50 Range: 0 - 0.350 mg/L
Program/Module: 62
Standard Solution: ☐ Results: _____
Concentration: 0.006 ppm TR
Analysis Time: 1026 Filtered: ☐
Reagent Blank Correction: ☐
Notes:

Manganese (Mn^{2+}):

Equipment: DR-850 DR-8 50 Range: 0 - 20.0 mg/L
Program/Module: 525nm 41
Concentration: 0.1 ppm TR
Analysis Time: 1039 Filtered: ☐
Notes:

QA/QC Checklist:

All data fields have been completed as necessary: ☑
Correct measurement units are cited in the SAMPLING DATA block: ☑
Values cited in the SAMPLING DATA block are consistent with the Groundwater Sample Log Sheet: ☑
Mulitplication is correct for each *Multiplier* table: ☑
Final calulated concentration is within the appropriate *Range Used* block: ☑
Alkalinity *Relationship* is determined appropriatly as per manufacturer (HACH) instructions: ☑
QA/QC sample (e.g., Std. Additions, etc.) frequency is appropriate as per the project planning documents: ☑
Nitrite Interference treatment was used for Nitrate test if Nitrite was detected: ☐ NA
Title block on ~~each~~ 1st page of form is initialized by person who performed this QA/QC Checklist: ☑

Tetra Tech NUS, Inc.

GROUNDWATER SAMPLE LOG SHEET

Project Site Name: NSWC CRANE, SWMU13
Project No.: N9060 CTO 0279

[] Domestic Well Data
[X] Monitoring Well Data
[] Other Well Type:
[] QA Sample Type:

Sample ID No.: 13GWT0402
Sample Location: 13GWT04
Sampled By: Goerdt
C.O.C. No.: 4825
Type of Sample:
[X] Low Concentration
[] High Concentration

SAMPLING DATA:

Date: 11-23-03	Color (Visual)	pH (S. U.)	S.C. (mS/cm)	Temp. (°C)	Turbidity (NTU)	DO (mg/l)	ORP (mV)	Other NA
Time: 1044								
Method: Peristaltic	Clear	5.24	0.228	16.45	6.85	4.14	243.6	--

PURGE DATA:

Date: 11-23-03	Volume	pH	S.C.	Temp. (C)	Turbidity	DO	Salinity	Other
Method: Peristaltic								
Monitor Reading (ppm): –								
Well Casing Diameter & Material								
Type: 2" ø PVC			See Low Flow Purge Data Sheets					
Total Well Depth (TD): 17.80								
Static Water Level (WL): 14.93								
One Casing Volume(gal/L): ~~3.62~~ 0.469 1.77								
Start Purge (hrs): 0942								
End Purge (hrs): 1042								
Total Purge Time (min): 60								
Total Vol. Purged (gal/L): 5.9								

SAMPLE COLLECTION INFORMATION:

Analysis	Preservative	Container Requirements	Collected
Explosives SW-846 8330	4°C	(2) L Glass Amber	Yes
Micellaneous Explosives SW-846 8330	4°C	(2) L Glass Amber	Yes
Total Metals SW846 6020/Mercury 7470A	4°C/HNO_3	(1) L HDPE	Yes
Diss. Metals SW846 6020/Mercury 7470A	4°C/HNO_3	(1) L HDPE	No
Nitrate + Nitrite (asN) EPA 353.2 & Ammonia (asN) EPA 350.1	4°C/H_2SO_4	(1) L HDPE	Yes
Total Organic Carbon	4°C/H_3PO_4	(2) 40ml Vails	No

OBSERVATIONS / NOTES:

Filtered Sample Collected Yes[] No[X]

17.80
14.93
2.87 (0.163) = .469 gal = 1.77 L

Circle if Applicable:

MS/MSD	Duplicate ID No.:
—	—

Signature(s):

Tetra Tech NUS, Inc.

LOW FLOW PURGE DATA SHEET

PROJECT : NSWC CRANE
PROJECT NUMBER: N9060
PROJECT SITE NAME: SWMU 13

WELL ID.: 13GWT04
DATE: 11-23-03
WEATHER: Cloudy 50°

Time (Hrs.)	Water Level (Ft. below TOC)	Volume (gal/L)	Flowrate (mL/min)	pH (S.U.)	Cond. (mS/cm)	Turb. (NTU)	DO (mg/L)	Temp. (Celsius)	ORP (mV)	Comments
0942	14.93	—	—	—	—	—	—	—	—	Start purge
0952	15.41	1.2	1200	5.71	0.244	31.0	8.52	16.26	166.0	clear
1002	15.45	2.2	1000	5.75	0.239	14.0	7.59	16.31	182.2	"
1012	15.48	3.2	1000	5.65	0.231	10.7	6.60	16.37	212.4	"
1022	15.48	4.1	900	5.50	0.218	9.05	5.37	16.45	232.6	"
1032	15.49	5.0	900	5.33	0.221	7.89	4.48	16.57	236.7	"
1037	15.49	5.45	450	5.26	0.226	8.35	4.18	16.50	241.3	"
1042	15.48	5.90	450	5.24	0.228	6.85	4.14	16.45	243.6	stop

Water Quality Meter (S/N) 98F0478 AB
Control Box Type (S/N) N/A
Turbidity Meter (S/N) 0920 4298

Pump Intake Depth 16.8'

SIGNATURE(S):

Tetra Tech NUS, Inc.

GROUNDWATER SAMPLE LOG SHEET

Project Site Name: NSWC CRANE, SWMU13
Project No.: N9060 CTO 0279

[] Domestic Well Data
[X] Monitoring Well Data
[] Other Well Type:
[] QA Sample Type:

Sample ID No.: 13GINT0502
Sample Location: 13MWT05
Sampled By: T. ROJAHN
C.O.C. No.: 4816
Type of Sample:
[X] Low Concentration
[] High Concentration

SAMPLING DATA:

	Color (Visual)	pH (S. U.)	S.C. (mS/cm)	Temp. (°C)	Turbidity (NTU)	DO (mg/l)	ORP (mV)	Other NA
Date: 11-6-03								
Time: 1325								
Method: SAMPLE	CLEAR	5.40	0.558	15.42	18.6	3.96	432	---

PURGE DATA:

	Volume	pH	S.C.	Temp. (C)	Turbidity	DO	Salinity	Other
Date: 11/6/03								
Method: Peristaltic								
Monitor Reading (ppm): –								
Well Casing Diameter & Material								
Type: 2" Ø PVC			See Low Flow Purge Data Sheets					
Total Well Depth (TD): 19.15								
Static Water Level (WL): 8.81								
One Casing Volume(gal/L): 6.4								
Start Purge (hrs): 0920								
End Purge (hrs): 1320								
Total Purge Time (min): 240								
Total Vol. Purged (gal/L): 21.7								

SAMPLE COLLECTION INFORMATION:

Analysis	Preservative	Container Requirements	Collected
Explosives SW-846 8330	4°C	(2) L Glass Amber	Yes
Micellaneous Explosives SW-846 8330	4°C	(2) L Glass Amber	Yes
Total Metals SW846 6020/Mercury 7470A	4°C/HNO_3	(1) L HDPE	Yes
Diss. Metals SW846 6020/Mercury 7470A	4°C/HNO_3	(1) L HDPE	YES -F
Nitrate + Nitrite (asN) EPA 353.2 & Ammonia (asN) EPA 350.1	4°C/H_2SO_4	(1) L HDPE	Yes
Total Organic Carbon	4°C/H_3PO_4	(2) 40ml Vails	NO

OBSERVATIONS / NOTES:

Filtered Sample Collected Yes[X] No[]
19.15 - 8.81 = 10.34 x 0.163 = 1.7 gal or 6.4L
INTAK @ MID SCREEN

Circle if Applicable:

MS/MSD

Duplicate ID No.:

Signature(s): Ty Rojahn

Tetra Tech NUS, Inc.

LOW FLOW PURGE DATA SHEET

PROJECT SITE NAME: NSWC CRANE
PROJECT NUMBER: N9060, CTO 0279

WELL ID.: 13MWT05
DATE: 11/06/03

Time (Hrs.)	Water Level (Ft. below TOC)	Flow (mL/Min.)	pH (S.U.)	Cond. (mS/cm)	Turb. (NTU)	DO (mg/L)	Temp. (Celsius)	Salinity (%)	ORP (mV)	Comments (Volume & Color)
0920	8.81	—	—	—	—	—	—	—	—	start PURGE
0930	9.60	120	5.21	0.619	23	4.86	14.58	-	347	1200 ml CLEAR
0940	10.18	80	5.16	0.622	10.8	3.88	14.57	-	371	2000 ml "
0950	10.68	80	5.13	0.618	11.5	3.87	14.21	-	384	2800 ml "
1000	11.28	90	5.13	0.617	12.6	3.69	14.64	-	392	3700 ml "
1010	11.76	90	5.12	0.614	18.2	3.53	14.90	-	400	4600 ml "
1020	12.23	90	5.07	0.615	23.4	3.29	15.02	-	401	5500 ml "
1030	12.68	90	5.02	0.615	26.2	2.81	15.13	-	402	6400 ml "
1040	12.95	90	4.99	0.609	20.4	2.87	15.03	-	410	7300 ml "
1050	13.26	90	4.96	0.602	17.7	2.92	14.89	-	416	8200 ml "
1100	13.58	90	5.02	0.612	18.0	3.18	15.35	-	410	9100 ml "
1110	13.85	90	5.10	0.626	19.2	3.40	15.63	-	402	10000 ml "
1120	14.31	90	5.10	0.624	13.3	3.37	15.61	-	409	10900 ml "
1130	14.65	90	5.10	0.624	10.9	3.35	15.60	-	406	11800 ml "
1140	15.02	90	5.10	0.622	7.60	3.32	15.58	-	421	12700 ml "
1150	15.38	90	5.16	0.622	8.13	3.26	15.63	-	421	13600 ml "
1200	15.64	90	5.21	0.619	8.78	3.23	15.62	-	422	14500 ml "
1210	15.95	90	5.25	0.613	10.35	3.16	15.42	-	422	15400 ml "
1220	16.10	90	5.30	0.608	16.3	3.24	15.36	-	422	16300 ml "
1230	16.20	90	5.34	0.602	23.5	3.30	15.31	-	422	17200 ml "
1240	16.35	90	5.35	0.594	19.4	3.32	15.44	-	422	18100 ml "
1250	16.48	90	5.37	0.585	19.3	3.42	15.54	-	424	19000 ml "
1300	16.65	90	5.40	0.577	19.1	3.58	15.47	-	425	19900 ml "
1310	16.81	90	5.40	0.565	18.8	3.77	15.45	-	429	20800 ml "
1320	16.91	90	5.40	0.558	18.6	3.96	15.42	-	432	21700 ml "
1320	—	—	—	—	—	—	—	—	—	start sampling

SIGNATURE(S): [signature]

Note: Analyte, method, and/or equipment may be deleted from form if not being performed.

FIELD ANALYTICAL LOG SHEET
GEOCHEMICAL PARAMETERS

Tetra Tech NUS, Inc.

Project Site Name: NSWC CRANE
Project No.: N9060
Sampled By: T. ROJAHN
Field Analyst: T. ROJAHN
Field Form Checked as per QA/QC Checklist (initials): TAR

Sample ID No.: 13GWT0502
Sample Location: 13MWT05
Duplicate: ☐
Blank: ☐

SAMPLING DATA:

	Color (Visual)	pH (S.U.)	S.C. (mS/cm)	Temp. (°C)	Turbidity (NTU)	DO (mg/l)	Salinity (%)	ORP (Eh) (+/- mv)
Date: 11-6-03								
Time: 1320								
Method: Peristaltic	CLEAR	5.40	0.558	15.42	18.6	3.96	—	432

SAMPLE COLLECTION/ANALYSIS INFORMATION:

ORP (Eh) (+/- mv)
Electrode Make & Model: YSI
Reference Electrode (circle one): Silver-Silver Chloride / Calomel / Hydrogen

Dissolved Oxygen:
Equipment: Chemetrics Test Kit
Concentration: 4 ppm
Analysis Time: 1326

Range Used:	Range	Method	Concentration ppm
☑	0 to 1 ppm	K-7510	
☑	1 to 12 ppm	K-7512	4

Notes:

Alkalinity:
Equipment: Chemetrics Test Kit
Concentration: <10 ppm
Analysis Time: 1336
Filtered: ☐

Range Used:	Range	Method	Concentration ppm
☑	10 to 100 ppm	K-9810	<10
☑	50 to 500 ppm	K-9815	
☐	100 to 1000 ppm	K-9820	

Notes: Colorless @ 27 but NO GREEN

Carbon Dioxide:
Equipment: Chemetrics Test Kit
Concentration: 33 ppm
Analysis Time: 1348

Range Used:	Range	Method	Concentration ppm
☑	10 to 100 ppm	K-1910	33
☑	100 to 1000 ppm	K-1920	
☐	250 to 2500 ppm	K-1925	

Notes:

Ferrous Iron (Fe^{2+}):
Equipment: DR-850 DR-890 Range: 0 - 3.00 mg/L
Program/Module: 500nm 33
Concentration: 0.11 ppm
Analysis Time: 1354
Filtered: ☐
Notes:

Hydrogen Sulfide (H_2S): Range: 0 - 5 mg/L
Equipment: HS-C Other:
Exceeded 5.0 mg/L range on color chart: ☐
Concentration: 0.0 ppm
Analysis Time: 1358
Notes:

Note: Analyte, method, and/or equipment may be deleted from form if not being performed.

FIELD ANALYTICAL LOG SHEET
GEOCHEMICAL PARAMETERS

Tetra Tech NUS, Inc.

Project Site Name:	NSWC CRANE	Sample ID No.:	13 GWT05
Project No.:	N9060	Sample Location:	13MWT05
Sampled By:	T. ROJAHN	Duplicate:	☐
Field Analyst:	T. ROJAHN	Blank:	☐

Sulfide (S^{2-}):

Equipment: DR-850 DR-890 Range: 0 - 0.70 mg/L Concentration: 0.09 ppm

Program/Module: 610nm 93 Analysis Time: 1403 Filtered: ☐

Notes:

Nitrite (NO_2^--N):

Concentration: 0.012 ppm

Equipment: DR-850 DR-850 Range: 0 - 0.350 mg/L Analysis Time: 1343 Filtered: ☐

Program/Module: 62

Standard Solution: ☐ Results: _____ Reagent Blank Correction: ☐

Notes:

Manganese (Mn^{2+}):

Concentration: 1.3 ppm

Equipment: DR-850 DR-890 Range: 0 - 20.0 mg/L Analysis Time: 1411 Filtered: ☐

Program/Module: 525nm 41

Notes:

QA/QC Checklist:

All data fields have been completed as necessary: ☑

Correct measurement units are cited in the SAMPLING DATA block: ☑

Values cited in the SAMPLING DATA block are consistent with the Groundwater Sample Log Sheet: ☑

Mulitplication is correct for each *Multiplier* table: ☑

Final calulated concentration is within the appropriate *Range Used* block: ☑

Alkalinity *Relationship* is determined appropriatly as per manufacturer (HACH) instructions: ☑

QA/QC sample (e.g., Std. Additions, etc.) frequency is appropriate as per the project planning documents: ☑

Nitrite Interference treatment was used for Nitrate test if Nitrite was detected: ☐ NA

Title block on ~~each~~ 1st page of form is initialized by person who performed this QA/QC Checklist: ☑

Tetra Tech NUS, Inc.

GROUNDWATER SAMPLE LOG SHEET

Project Site Name: NSWC CRANE, SWMU13
Project No.: N9060 CTO 0279

[] Domestic Well Data
[X] Monitoring Well Data
[] Other Well Type:
[] QA Sample Type:

Sample ID No.: 13GWT0602
Sample Location: SWMU 13
Sampled By: T.R.
C.O.C. No.: 4837, 4836
Type of Sample:
[X] Low Concentration
[] High Concentration

SAMPLING DATA:

	Color (Visual)	pH (S. U.)	S.C. (mS/cm)	Temp. (°C)	Turbidity (NTU)	DO (mg/l)	ORP (mV)	Other NA
Date: 12-07-03								
Time: 1300								
Method: Peristaltic	CLEAR	6.45	0.363	12.50	22	7.35	+180.4	---

PURGE DATA:

	Volume	pH	S.C.	Temp. (C)	Turbidity	DO	Salinity	Other
Date: 12/6/03								
Method: Peristaltic pump								
Monitor Reading (ppm): 0.0								
Well Casing Diameter & Material Type: 2" ø PVC			See Low Flow Purge Data Sheets					
Total Well Depth (TD): 17.55'								
Static Water Level (WL): 13.58'								
One Casing Volume(gal/L): 2.5								
Start Purge (hrs): 1510								
End Purge (hrs): 1628 — purged dry								
Total Purge Time (min): 78								
Total Vol. Purged (gal/L): 2.0								

SAMPLE COLLECTION INFORMATION:

Analysis	Preservative	Container Requirements	Collected
Explosives SW-846 8330	4°C	12/7 ~~8~~(1) ~~(2)~~ L Glass Amber 1300	Yes
Micellaneous Explosives SW-846 8330	4°C	↓ ~~(2)~~ L Glass Amber ↓	Yes
Total Metals SW846 6020/Mercury 7470A	4°C/HNO_3	12/9 @ 1730 (1) L HDPE	Yes
Diss. Metals SW846 6020/Mercury 7470A	4°C/HNO_3	12/10 @ 1800 (1) L HDPE	No — F
Nitrate + Nitrite (asN) EPA 353.2 & Ammonia (asN) EPA 350.1	4°C/H_2SO_4	12/11 @ 1615 (1) L HDPE	Yes
Total Organic Carbon	4°C/H_3PO_4	(2) 40ml Vails	NO

OBSERVATIONS / NOTES:

Filtered Sample Collected Yes[] No[]

Well Historically Dries Out.

Well 13MWT06 wet dry @ 1628

Total Vol. purged 2.0 g

Collected samples WEEK DAYS & 1730 Hrs due to SECURITY RESTRICTIONS INSIDE the BLDG #165 BUFFER ZONE

12/7 collected 500ml of Exp. Sample (TC)
12/8 " " " " " (JG)
12/9 " Total Metals (TC)
12/10 " Filtered Metals (JG)
12/11 " Nitrate, Nitrite & Ammonia (TR)

Circle if Applicable:

MS/MSD	Duplicate ID No.:
—	—

Signature(s): [illegible]

Tetra Tech NUS, Inc.

LOW FLOW PURGE DATA SHEET

PROJECT : NSWC CRANE
PROJECT NUMBER: N9060
PROJECT SITE NAME: SWMU 13

WELL ID.: 13MWT06
DATE: 12/6/03
WEATHER: SUNNY, BREEZY, 40°F

Time (Hrs.)	Water Level (Ft. below TOC)	Volume (gal/L)	Flowrate (mL/min)	pH (S.U.)	Cond. (mS/cm)	Turb. (NTU)	DO (mg/L)	Temp. (Celsius)	ORP (mV)	Comments
1510	13.85	0	100	6.26	0.489	230	5.23	15.00	73.8	Cloudy, No odor
1520	14.70		100	6.45	0.414	200	6.30	14.45	118.2	"
1530	15.26		< 100	6.51	0.360	50	8.25	14.31	148.5	Clear
1540	15.80			6.47	0.342	33	10.13	14.13	162.0	"
1550	16.10			6.48	0.340	29	10.11	13.73	167.4	"
1600	16.50			6.50	0.346	26	10.08	13.73	172.3	"
1610	16.90			6.48	0.363	23	8.91	13.63	176.9	"
1620	17.11	2.0 gal		6.45	0.363	22	7.35	12.50	180.4	"
1630	—	—	—	—	—	—	—	—	—	DRY

Water Quality Meter (S/N) 02B0141
Control Box Type (S/N) Peristaltic #400
Turbidity Meter (S/N) 3106-1402

Pump Intake Depth 16.75'

SIGNATURE(S): Scott Gue

Tetra Tech NUS, Inc.

GROUNDWATER SAMPLE LOG SHEET

Project Site Name: NSWC CRANE, SWMU13
Project No.: N9060 CTO 0279

[] Domestic Well Data
[X] Monitoring Well Data
[] Other Well Type:
[] QA Sample Type:

Sample ID No.: 13GWT0702
Sample Location: 13MWT07
Sampled By: FW
C.O.C. No.: 4818
Type of Sample:
[X] Low Concentration
[] High Concentration

SAMPLING DATA:

Date: 11-10-03	Color (Visual)	pH (S. U.)	S.C. (mS/cm)	Temp. (°C)	Turbidity (NTU)	DO (mg/l)	ORP (mV)	Other NA
Time: 1330								
Method: PERISTALTIC	CLEAR	3.90	1.054	18.45	3.01	1.32	383.6	---

PURGE DATA:

Date: 11-10-03	Volume	pH	S.C.	Temp. (C)	Turbidity	DO	Salinity	Other
Method: PERISTALTIC								
Monitor Reading (ppm): —								
Well Casing Diameter & Material Type: 2" PVC			See Low Flow Purge Data Sheets					
Total Well Depth (TD): 17.95								
Static Water Level (WL): 4.65								
One Casing Volume(gal/L): 2.2								
Start Purge (hrs): 1120								
End Purge (hrs): 1330								
Total Purge Time (min): 130								
Total Vol. Purged (gal/L): 2.2								

SAMPLE COLLECTION INFORMATION:

Analysis	Preservative	Container Requirements	Collected
Explosives SW-846 8330	4°C	(2) L Glass Amber	Yes
Micellaneous Explosives SW-846 8330	4°C	(2) L Glass Amber	Yes
Total Metals SW846 6020/Mercury 7470A	4°C/HNO_3	(1) L HDPE	Yes
Diss. Metals SW846 6020/Mercury 7470A	4°C/HNO_3	(1) L HDPE	—
Nitrate + Nitrite (asN) EPA 353.2 & Ammonia (asN) EPA 350.1	4°C/H_2SO_4	(1) L HDPE	Yes.
Total Organic Carbon	4°C/H_3PO_4	(2) 40ml Vails	—

OBSERVATIONS / NOTES:

Filtered Sample Collected Yes[] No[X]
Intake mid screen

Circle if Applicable:

~~MS/MSD~~

Duplicate ID No.: 13FD110301

Signature(s): [signature]

Tetra Tech NUS, Inc.

LOW FLOW PURGE DATA SHEET

PROJECT SITE NAME: NSWC CRANE
PROJECT NUMBER: N9060, CTO 0279

WELL ID.: 13MWT07
DATE: 11-10-03

Time (Hrs.)	Water Level (Ft. below TOC)	Flow (mL/Min.)	pH (S.U.)	Cond. (mS/cm)	Turb. (NTU)	DO (mg/L)	Temp. (Celsius)	Salinity (%)	ORP (mV)	Comments (Volume & Color)
1120	4.65									
1130	5.63	85	4.12	0.971	10.0	3.56	16.48	–	330.9	START
1140	6.24	↓	4.10	0.983	8.0	2.79	16.99	–	360.0	
1150	6.52	80	4.08	0.985	7.0	2.26	17.17	–	371.1	
1200	6.89		4.04	0.992	6.55	1.92	17.21	–	375.5	
1210	7.11		4.02	1.000	6.02	1.76	17.77	–	375.8	
1230	7.44		3.98	1.007	5.24	1.61	17.70	–	377.8	
1240	7.67		3.96	1.019	4.04	1.50	18.06	–	376.9	
1250	7.89	↓	3.95	1.031	4.49	1.42	18.41	–	376.4	
1300	8.05	75	3.93	1.046	3.69	1.38	18.78	–	378.8	
1307	8.13		3.92	1.049	4.70	1.35	18.66	–	380.7	
1316	8.19		3.90	1.052	3.89	1.35	18.61	–	382.7	
1323	8.26		3.90	1.054	3.38	1.32	18.54	–	383.1	
1330	8.31	↓	3.90	1.054	3.01	1.32	18.45		383.6	SAMPLE
1618										END

SIGNATURE(S): [illegible]

Tetra Tech NUS, Inc.

GROUNDWATER SAMPLE LOG SHEET

Project Site Name: NSWC CRANE, SWMU13
Project No.: N9060 CTO 0279

[] Domestic Well Data
[X] Monitoring Well Data
[] Other Well Type:
[] QA Sample Type:

Sample ID No.: 13GWT0802
Sample Location: 13MWT08
Sampled By: S. GRIER
C.O.C. No.: 4826
Type of Sample:
[X] Low Concentration
[] High Concentration

SAMPLING DATA:

	Color (Visual)	pH (S. U.)	S.C. (mS/cm)	Temp. (°C)	Turbidity (NTU)	DO (mg/l)	ORP (mV)	Other NA
Date: 11/22/03								
Time: 1515								
Method: Peristoltic	Clear	5.00	0.076	15.18	36	6.44	266.7	---

PURGE DATA:

	Volume	pH	S.C.	Temp. (C)	Turbidity	DO	Salinity	Other
Date: 11/22/03								
Method: Peristoltic pump								
Monitor Reading (ppm):								
Well Casing Diameter & Material								
Type: 2"	See Low Flow Purge Data Sheets							
Total Well Depth (TD): 16.60								
Static Water Level (WL): 4.11								
One Casing Volume(gal/L):								
Start Purge (hrs): 1330								
End Purge (hrs): 1505								
Total Purge Time (min): 95								
Total Vol. Purged (gal/L): 5.0								

SAMPLE COLLECTION INFORMATION:

Analysis	Preservative	Container Requirements	Collected
Explosives SW-846 8330	4°C	(2) L Glass Amber	Yes
Micellaneous Explosives SW-846 8330	4°C	(2) L Glass Amber	Yes
Total Metals SW846 6020/Mercury 7470A	4°C/HNO_3	(1) L HDPE	Yes
Diss. Metals SW846 6020/Mercury 7470A	4°C/HNO_3	(1) L HDPE	YES
Nitrate + Nitrite (asN) EPA 353.2 & Ammonia (asN) EPA 350.1	4°C/H_2SO_4	(1) L HDPE	Yes
Total Organic Carbon	4°C/H_3PO_4	(2) 40ml Vails	NONE

OBSERVATIONS / NOTES:

Filtered Sample Collected Yes[] No[]

Circle if Applicable:

MS/MSD	Duplicate ID No.:	Signature(s):
—	13FD11230301	[signature]

Tetra Tech NUS, Inc.

LOW FLOW PURGE DATA SHEET

PROJECT : NSWC CRANE
PROJECT NUMBER: N9060
PROJECT SITE NAME: 13 SWMU

WELL ID.: 13 MWT 08
DATE: 11/22/03
WEATHER: Cloudy, 68°F

Time (Hrs.)	Water Level (Ft. below TOC)	Volume ~~(gal/L)~~ mL	Flowrate (mL/min)	pH (S.U.)	Cond. (mS/cm)	Turb. (NTU)	DO (mg/L)	Temp. (Celsius)	ORP (mV)	Comments
1330	4.41	0	400	5.17	0.087	>1000	6.07	15.52	191.3	GREY - NO ODOR
1335	4.69	~~400~~	200	4.87	0.079	>1000	6.11	15.02	200.6	
1340	4.71		200	4.89	0.079	738	6.12	15.01	210.4	
1345	4.73		150	4.90	0.079	100	6.13	15.00	228.3	Clearing
1350	4.76		150	4.90	0.079	91	6.19	15.00	235.6	
1355	4.82		150	4.90	0.078	84	6.26	15.00	239.8	
1400	4.88		150	4.90	0.078	70	6.30	14.99	247.1	
1405	4.90		150	4.93	0.078	55	6.33	15.00	248.9	
1415	5.00		150	4.94	0.077	53	6.39	15.07	250.8	
1425	5.05		150	4.96	0.077	50	6.40	15.18	253.1	
1435	5.15		175	4.98	0.076	45	6.44	15.03	259.2	
1445	5.30		150	4.99	0.076	35	6.36	15.01	262.6	
1455	5.37		150	4.99	0.076	36	6.44	15.08	264.4	
1505	5.39	5 gal	150	5.00	0.077	36	6.44	15.23	266.7	
										Sample 13GWT0802 taken @ 1515

Water Quality Meter (S/N) 02B0141
Control Box Type (S/N) N/A
Turbidity Meter (S/N) 3106-1402

Pump Intake Depth 11.0'

SIGNATURE(S): [signature]

Note: Analyte, method, and/or equipment may be deleted from form if not being performed.

FIELD ANALYTICAL LOG SHEET
GEOCHEMICAL PARAMETERS

Tetra Tech NUS, Inc.

Project Site Name: NSWC CRANE
Project No.: N9060
Sampled By: S. Grice
Field Analyst: T. Rojahn
Field Form Checked as per QA/QC Checklist (initials): TR

Sample ID No.: 13GWT0802
Sample Location: 13MWT08
Duplicate: ☐
Blank: ☐

SAMPLING DATA:

Date: 11-22-03	Color	pH	S.C.	Temp.	Turbidity	DO	Salinity	ORP (Eh)
Time: TR Peristaltic	(Visual)	(S.U.)	(mS/cm)	(°C)	(NTU)	(mg/l)	(%)	(+/- mv)
Method: 1515	CLEAR	5.00	0.076	15.18	36	6.44	—	+266.7

SAMPLE COLLECTION/ANALYSIS INFORMATION:

ORP (Eh) (+/- mv)

Electrode Make & Model: YSI

Reference Electrode (circle one): Silver-Silver Chloride / Calomel / Hydrogen

Dissolved Oxygen:

Equipment: Chemetrics Test Kit

Concentration: 5 ppm

Range Used:	Range	Method	Concentration ppm
☐	0 to 1 ppm	K-7510	
☑	1 to 12 ppm	K-7512	5

Analysis Time: 1615

Notes:

Alkalinity:

Equipment: Chemetrics Test Kit

Concentration: <10 ppm

Range Used:	Range	Method	Concentration ppm
☑	10 to 100 ppm	K-9810	<10
☑	50 to 500 ppm	K-9815	
☐	100 to 1000 ppm	K-9820	

Analysis Time: 1649

Filtered: ☑

Notes:

Carbon Dioxide:

Equipment: Chemetrics Test Kit

Concentration: 45 ppm

Range Used:	Range	Method	Concentration ppm
☑	10 to 100 ppm	K-1910	45
☑	100 to 1000 ppm	K-1920	
☐	250 to 2500 ppm	K-1925	

Analysis Time: 1626

Notes:

Ferrous Iron (Fe^{2+}):

Equipment: DR-850 DR-890 Range: 0 - 3.00 mg/L
Program/Module: 500nm 33

Concentration: 0.21 ppm

Analysis Time: 1646

Filtered: ☑

Notes:

Hydrogen Sulfide (H_2S): Range: 0 - 5 mg/L

Equipment: HS-C Other:

Exceeded 5.0 mg/L range on color chart: ☐

Concentration: 0.0 ppm

Analysis Time: 1704

SG

Notes:

Note: Analyte, method, and/or equipment may be deleted from form if not being performed.

Tetra Tech NUS, Inc.

FIELD ANALYTICAL LOG SHEET
GEOCHEMICAL PARAMETERS

Project Site Name: NSWC CRANE
Project No.: N9060
Sampled By: S.G.
Field Analyst: T.R.

Sample ID No.: 13GWT0802
Sample Location: 13MWT08
Duplicate: ☐
Blank: ☐

Sulfide (S^{2-}):

Equipment: DR-850 DR-8 90 Range: 0 - 0.70 mg/L
Program/Module: 610nm 93
Concentration: 0.00 ppm
Analysis Time: 1659 Filtered: ☑
Notes:

Nitrite (NO_2^--N):

Equipment: DR-850 DR-8 50 Range: 0 - 0.350 mg/L
Program/Module: 62
Concentration: 0.001 ppm
Analysis Time: 1655 Filtered: ☑
Standard Solution: ☐ Results: _____
Reagent Blank Correction: ☐
Notes:

Manganese (Mn^{2+}):

Equipment: DR-850 DR-8 60 Range: 0 - 20.0 mg/L
Program/Module: 525nm 41
Concentration: 0.0 ppm
Analysis Time: 1705 Filtered: ☑
Notes:

QA/QC Checklist:

All data fields have been completed as necessary: ☑
Correct measurement units are cited in the SAMPLING DATA block: ☑
Values cited in the SAMPLING DATA block are consistent with the Groundwater Sample Log Sheet: ☑
Mulitplication is correct for each *Multiplier* table: ☑
Final calulated concentration is within the appropriate *Range Used* block: ☑
Alkalinity *Relationship* is determined appropriatly as per manufacturer (HACH) instructions: ☑
QA/QC sample (e.g., Std. Additions, etc.) frequency is appropriate as per the project planning documents: ☑
Nitrite Interference treatment was used for Nitrate test if Nitrite was detected: ☐ N/A
Title block on ~~each~~ 1st page of form is initialized by person who performed this QA/QC Checklist: ☑

Tetra Tech NUS, Inc.

GROUNDWATER SAMPLE LOG SHEET

Project Site Name: NSWC CRANE, SWMU13
Project No.: N9060 CTO 0279

[] Domestic Well Data
[X] Monitoring Well Data
[] Other Well Type:
[] QA Sample Type:

Sample ID No.: 13GWT0903 (TR)
Sample Location: 13GWT09
Sampled By: JG
C.O.C. No.: 4828
Type of Sample:
[X] Low Concentration
[] High Concentration

SAMPLING DATA:

Date: 12-4-03	Color (Visual)	pH (S. U.)	S.C. (mS/cm)	Temp. (°C)	Turbidity (NTU)	DO (mg/l)	ORP (mV)	Other NA
Time: 1018								
Method: Peristaltic	Clear	5.33	0.640	12.82	4.07	1.14	251.0	---

PURGE DATA:

Date: 12-4-03	Volume	pH	S.C.	Temp. (C)	Turbidity	DO	Salinity	Other
Method: Peristaltic								
Monitor Reading (ppm): —								
Well Casing Diameter & Material								
Type: 2" Ø PVC			See Low Flow Purge Data Sheets					
Total Well Depth (TD): 22.96								
Static Water Level (WL): 8.60								
One Casing Volume(gal/L): 8.86								
Start Purge (hrs): 0835								
End Purge (hrs): 1015								
Total Purge Time (min): 100								
Total Vol. Purged (gal/L): 9.0								

SAMPLE COLLECTION INFORMATION:

Analysis	Preservative	Container Requirements	Collected
Explosives SW-846 8330	4°C	(2) L Glass Amber	Yes
Micellaneous Explosives SW-846 8330	4°C	(2) L Glass Amber	Yes
Total Metals SW846 6020/Mercury 7470A	4°C/HNO_3	(1) L HDPE	Yes
Diss. Metals SW846 6020/Mercury 7470A	4°C/HNO_3	(1) L HDPE	No
Nitrate + Nitrite (asN) EPA 353.2 & Ammonia (asN) EPA 350.1	4°C/H_2SO_4	(1) L HDPE	Yes
Total Organic Carbon	4°C/H_3PO_4	(2) 40ml Vails	No

OBSERVATIONS / NOTES:

Filtered Sample Collected Yes[] No[X]

MNA

22.96
8.60
14.36 (.163) = 2.34 gal = 8.86 L

Circle if Applicable:

MS/MSD

Duplicate ID No.: 13FD120403~~02~~ 01

Signature(s):

Tetra Tech NUS, Inc.

LOW FLOW PURGE DATA SHEET

PROJECT : NSWC CRANE
PROJECT NUMBER: N9060
PROJECT SITE NAME: SWMU 13

WELL ID.: 13GWT0903 (TR)
DATE: 12-4-03
WEATHER: Overcast 38°

Time (Hrs.)	Water Level (Ft. below TOC)	Volume (gal/L)	Flowrate (mL/min)	pH (S.U.)	Cond. (mS/cm)	Turb. (NTU)	DO (mg/L)	Temp. (Celsius)	ORP (mV)	Comments
0835	8.60	–	–	–	–	–	–	–	–	Start purge
0845	8.95	0.9	900	5.43	0.588	1.15	1.37	11.78	298.8	clear
0855	9.02	1.8	900	5.47	0.580	1.37	1.27	11.87	225.7	"
0905	9.02	2.7	900	5.46	0.572	7.48	1.17	12.34	231.6	"
0915	9.05	3.6	900	5.43	0.577	9.70	1.13	12.01	236.5	"
0925	9.09	4.5	900	5.41	0.586	7.60	1.13	12.31	239.7	"
0935	9.12	5.4	900	5.41	0.592	5.60	1.11	12.19	240.0	"
0945	9.14	6.3	900	5.38	0.606	5.23	1.13	12.64	245.1	"
0955	9.17	7.2	900	5.38	0.624	4.66	1.11	12.77	246.5	"
1005	9.19	8.1	900	5.37	0.636	4.21	1.14	12.58	246.6	"
1015	9.20	9.0	900	5.32	0.640	4.07	1.14	12.82	251.0	Stop purge

Water Quality Meter (S/N) 98F0478 AB
Control Box Type (S/N) NA
Turbidity Meter (S/N) 3317 2402

Pump Intake Depth ~18'

SIGNATURE(S): [signature]

Note: Analyte, method, and/or equipment may be deleted from form if not being performed.

FIELD ANALYTICAL LOG SHEET
GEOCHEMICAL PARAMETERS

Tetra Tech NUS, Inc.

Project Site Name: NSWC CRANE

Project No.: N9060 CTO279

Sampled By: Goerdt

Field Analyst: Goerdt

Field Form Checked as per QA/QC Checklist (initials): TK

Sample ID No.: 13GWT09D2

Sample Location: 13GWT09 M (TE)

Duplicate: ☐

Blank: ☐

SAMPLING DATA:

	Color (Visual)	pH (S.U.)	S.C. (mS/cm)	Temp. (°C)	Turbidity (NTU)	DO (mg/l)	Salinity (%)	ORP (Eh) (+/- mv)
Date: 12-4-03								
Time: 1018								
Method: Peristaltic	Clear	5.32	0.640	12.82	4.07	1.14	—	251.0

SAMPLE COLLECTION/ANALYSIS INFORMATION:

ORP (Eh) (+/- mv)

Electrode Make & Model: YSI

Reference Electrode (circle one): Silver-Silver Chloride / Calomel / Hydrogen

Dissolved Oxygen:

Equipment: Chemetrics Test Kit

Concentration: 1.5 ppm

Range Used:	Range	Method	Concentration ppm
☐	0 to 1 ppm	K-7510	
☒	1 to 12 ppm	K-7512	1.5

Analysis Time: 1040

Notes:

Alkalinity:

Equipment: Chemetrics Test Kit

Concentration: 0.0 ppm

Range Used:	Range	Method	Concentration ppm
☒	10 to 100 ppm	K-9810	0.0
☐	50 to 500 ppm	K-9815	
☐	100 to 1000 ppm	K-9820	

Analysis Time: 1110

Filtered: ☐

Notes: No color change

Carbon Dioxide:

Equipment: Chemetrics Test Kit

Concentration: 48 ppm

Range Used:	Range	Method	Concentration ppm
☒	10 to 100 ppm	K-1910	48
☐	100 to 1000 ppm	K-1920	
☐	250 to 2500 ppm	K-1925	

Analysis Time: 1119

Notes:

Ferrous Iron (Fe^{2+}):

Equipment: DR-850 DR-8 __ Range: 0 - 3.00 mg/L

Program/Module: 500nm 33

Concentration: 0.0 ppm

Analysis Time: 1128

Notes: color less

Filtered: ☐

Hydrogen Sulfide (H_2S): Range: 0 - 5 mg/L

Equipment: HS-C Other: _____

Exceeded 5.0 mg/L range on color chart: ☐

Concentration: 0.0 ppm

Analysis Time: 1135

Notes:

Note: Analyte, method, and/or equipment may be deleted from form if not being performed.

FIELD ANALYTICAL LOG SHEET
GEOCHEMICAL PARAMETERS

Tetra Tech NUS, Inc.

Project Site Name: NSWC CRANE
Project No.: N9060 CTO 279
Sampled By: Goerdt
Field Analyst: Goerdt

Sample ID No.: 136WT0902
Sample Location: 136WT09 /M (TC)
Duplicate: ☐
Blank: ☐

Sulfide (S^{2-}):

Equipment: DR-850 DR-8 __ Range: 0 - 0.70 mg/L
Program/Module: 610nm 93
Concentration: 0.01 ppm
Analysis Time: 1147 Filtered: ☐
Notes:

Nitrite (NO_2^--N):

Equipment: DR-850 DR-8 __ Range: 0 - 0.350 mg/L
Program/Module: 62
Concentration: 0.023 ppm
Analysis Time: 1048 Filtered: ☐
Standard Solution: ☐ Results: _____
Reagent Blank Correction: ☐
Notes:

Manganese (Mn^{2+}):

Equipment: DR-850 DR-8 __ Range: 0 - 20.0 mg/L
Program/Module: 525nm 41
Concentration: 0.4 ppm
Analysis Time: 1157 Filtered: ☐
Notes:

QA/QC Checklist:

All data fields have been completed as necessary: ☑
Correct measurement units are cited in the SAMPLING DATA block: ☑
Values cited in the SAMPLING DATA block are consistent with the Groundwater Sample Log Sheet: ☑
Mulitplication is correct for each *Multiplier* table: ☑
Final calulated concentration is within the appropriate *Range Used* block: ☑
Alkalinity *Relationship* is determined appropriatly as per manufacturer (HACH) instructions: ☑
QA/QC sample (e.g., Std. Additions, etc.) frequency is appropriate as per the project planning documents: ☑
Nitrite Interference treatment was used for Nitrate test if Nitrite was detected: ☐ NA
Title block on ~~each~~ 1st page of form is initialized by person who performed this QA/QC Checklist: ☑

Tetra Tech NUS, Inc.

GROUNDWATER SAMPLE LOG SHEET

Project Site Name: NSWC CRANE, SWMU13
Project No.: N9060 CTO 0279

[] Domestic Well Data
[X] Monitoring Well Data
[] Other Well Type:
[] QA Sample Type:

Sample ID No.: 13GWT1002
Sample Location: 13GWT10
Sampled By: Gorrat/TR
C.O.C. No.: 4822
Type of Sample:
[X] Low Concentration
[] High Concentration

SAMPLING DATA:

Date: 11-20-03	Color	pH	S.C.	Temp.	Turbidity	DO	ORP	Other
Time: 1322	(Visual)	(S. U.)	(mS/cm)	(°C)	(NTU)	(mg/l)	(mV)	NA
Method: Peristaltic	Clear	4.74	.520	19.73	5.79	4.83	230.3	---

PURGE DATA:

Date: 11-20-03	Volume	pH	S.C.	Temp. (C)	Turbidity	DO	Salinity	Other
Method: Peristaltic								
Monitor Reading (ppm): –								
Well Casing Diameter & Material								
Type: 2" Ø PVC			See Low Flow Purge Data Sheets					
Total Well Depth (TD): 28.13								
Static Water Level (WL): 16.79								
One Casing Volume(gal/L): 7.0								
Start Purge (hrs): 0917								
End Purge (hrs): 1317								
Total Purge Time (min): 240								
Total Vol. Purged (gal/L): 18.6								

SAMPLE COLLECTION INFORMATION:

Analysis	Preservative	Container Requirements	Collected
Explosives SW-846 8330	4°C	(2) L Glass Amber	Yes
Micellaneous Explosives SW-846 8330	4°C	(2) L Glass Amber	Yes
Total Metals SW846 6020/Mercury 7470A	4°C/HNO_3	(1) L HDPE	Yes
Diss. Metals SW846 6020/Mercury 7470A	4°C/HNO_3	(1) L HDPE	No
Nitrate + Nitrite (asN) EPA 353.2 & Ammonia (asN) EPA 350.1	4°C/H_2SO_4	(1) L HDPE	Yes
Total Organic Carbon	4°C/H_3PO_4	(2) 40ml Vails	YES

OBSERVATIONS / NOTES:

Filtered Sample Collected Yes[] No[X]

28.13
16.79
11.34 (0.163) = 18.48 gal = 7.0 L

Circle if Applicable:

MS/MSD	Duplicate ID No.:
—	—

Signature(s):

Tetra Tech NUS, Inc.

LOW FLOW PURGE DATA SHEET

PROJECT : NSWC CRANE
PROJECT NUMBER: N9060
PROJECT SITE NAME: SWMU 13

WELL ID.: 136WT1002
DATE: 11-20-03
WEATHER: Sun 50 F

Time (Hrs.)	Water Level (Ft. below TOC)	Volume (gal/L)	Flowrate (mL/min)	pH (S.U.)	Cond. (mS/cm)	Turb. (NTU)	DO (mg/L)	Temp. (Celsius)	ORP (mV)	Comments
0917	16.79	–	–	–	–	–	–	–	–	start purge
0927	18.40	1.2	120	4.31	0.460	11.1	1.37	14.99	253.3	clear
0937	18.98	2.0	80	4.26	0.464	5.72	0.76	15.12	263.9	"
0947	19.43	3.0	100	4.03	0.473	3.88	1.10	15.53	289.4	"
0957	19.79	3.7	70	3.90	0.479	5.28	1.53	15.49	336.1	"
1007	20.16	4.4	70	3.90	0.479	5.67	1.61	15.53	343.3	"
1017	20.51	5.1	70	3.99	0.478	4.36	1.52	15.66	329.7	"
1027	20.89	5.8	70	4.06	0.477	4.57	1.42	15.72	320.8	"
1037	21.22	6.5	70	4.15	0.480	7.07	1.33	16.07	306.8	"
1047	21.58	7.2	70	4.25	0.479	9.78	1.19	16.06	290.1	"
1057	21.93	7.9	70	4.35	0.477	37.2	1.13	16.09	277.4	jump in turb.
1107	22.22	8.6	70	4.43	0.476	60.2	0.90	16.03	267.7	slight cloudy
1117	22.53	9.3	70	4.48	0.481	102.6	0.76	16.24	262.3	"
1127	22.83	10.0	70	4.59	0.484	105.9	0.71	16.27	246.0	"
1137	23.14	10.7	70	4.67	0.486	340.0	0.80	16.31	228.8	cloudy
1147	23.44	11.55	85	4.76	0.487	447.0	0.87	16.26	215.4	"
1157	23.58	12.40	85	4.81	0.521	392	1.62	17.88	207.7	"
1207	23.58	13.25	85	4.87	0.531	117	2.89	19.09	205.8	"
1217	23.59	14.10	85	4.88	0.526	39.3	3.37	19.22	207.2	"
1227	23.59	14.95	85	4.87	0.517	11.9	3.72	18.95	211.6	TURB MEAS PRIOR TO
1237	23.59	15.80	85	4.84	0.516	22.8	4.14	19.05	215.8	FLOW THRU CELL
1247	23.59	16.65	85	4.81	0.519	16.5	4.23	19.46	218.9	CLOUDY

Water Quality Meter (S/N) 98F0478 AB
Control Box Type (S/N) N/A
Turbidity Meter (S/N) 0920 4298

Pump Intake Depth ~27' this well draws down

SIGNATURE(S):

Tetra Tech NUS, Inc.

LOW FLOW PURGE DATA SHEET

PROJECT : NSWC CRANE
PROJECT NUMBER: N9060
PROJECT SITE NAME: SWMU 13

WELL ID.: 13GWT1002
DATE: 11-20-03
WEATHER: SUNNY 60°

Time (Hrs.)	Water Level (Ft. below TOC)	Volume (gal/L)	Flowrate (mL/min)	pH (S.U.)	Cond. (mS/cm)	Turb. (NTU)	DO (mg/L)	Temp. (Celsius)	ORP (mV)	Comments
1257	23.59	17.50	85	4.77	0.521	13.5	4.48	19.69	223.3	CLEAR
1307	23.59	17.90	40	4.76	0.521	8.01	4.59	19.70	226.5	CLEAR
1317	23.59	18.60	70	4.74	0.520	5.79	4.83	19.73	230.3	Stop purge

Water Quality Meter (S/N) 98F0478AB
Control Box Type (S/N) N/A
Turbidity Meter (S/N) 0920-429.8

Pump Intake Depth ~27'

SIGNATURE(S): [illegible]

PAGE ~~2~~ 3 OF ~~2~~ 3

Note: Analyte, method, and/or equipment may be deleted from form if not being performed.

Tetra Tech NUS, Inc.

FIELD ANALYTICAL LOG SHEET
GEOCHEMICAL PARAMETERS

Project Site Name: NSWC CRANE
Project No.: 9060
Sampled By: JGeondt
Field Analyst: TRojahn
Field Form Checked as per QA/QC Checklist (initials): TL

Sample ID No.: 13GWT10 02
Sample Location: 13MWT10
Duplicate: ☐
Blank: ☐

SAMPLING DATA:

	Color (Visual)	pH (S.U.)	S.C. (mS/cm)	Temp. (°C)	Turbidity (NTU)	DO (mg/l)	Salinity (%)	ORP (Eh) (+/- mv)
Date: 11-20-03								
Time: 1322								
Method: Peristaltic	Clear	4.74	0.520	19.73	5.79	4.83	—	+230.3

SAMPLE COLLECTION/ANALYSIS INFORMATION:

ORP (Eh) (+/- mv)

Electrode Make & Model: YSI

Reference Electrode (circle one): Silver-Silver Chloride / Calomel / Hydrogen

Dissolved Oxygen:

Equipment: Chemetrics Test Kit

Concentration: 3.5 ppm

Range Used:	Range	Method	Concentration ppm
☐	0 to 1 ppm	K-7510	
☑	1 to 12 ppm	K-7512	3.5

Analysis Time: 1330

Notes:

Alkalinity:

Equipment: Chemetrics Test Kit

Concentration: <10 ppm

Range Used:	Range	Method	Concentration ppm
☑	10 to 100 ppm	K-9810	<10
☑	50 to 500 ppm	K-9815	
☐	100 to 1000 ppm	K-9820	

Analysis Time: 1339

Filtered: ☐

Notes:

Carbon Dioxide:

Equipment: Chemetrics Test Kit

Concentration: 154 ppm

Range Used:	Range	Method	Concentration ppm
☐	10 to 100 ppm	K-1910	
☑	100 to 1000 ppm	K-1920	154
☐	250 to 2500 ppm	K-1925	

Analysis Time: 1344

Notes:

Ferrous Iron (Fe^{2+}):

Equipment: DR-850 DR-850 Range: 0 - 3.00 mg/L
Program/Module: 500nm 33

High Limit
Concentration: >3.30 ppm

Analysis Time: 1350

Filtered: ☐

Notes:

Hydrogen Sulfide (H_2S):

Range: 0 - 5 mg/L

Equipment: HS-C Other:

Exceeded 5.0 mg/L range on color chart: ☐

Concentration: 0.0 ppm

Analysis Time: 1400

Notes:

Note: Analyte, method, and/or equipment may be deleted from form if not being performed.

FIELD ANALYTICAL LOG SHEET
GEOCHEMICAL PARAMETERS

Tetra Tech NUS, Inc.

Project Site Name:	NSWC CRANE	Sample ID No.:	13GWT1002
Project No.:	9060	Sample Location:	13MWT10
Sampled By:	JG	Duplicate:	☐
Field Analyst:	TR	Blank:	☐

Sulfide (S^{2-}):

Equipment: DR-850 DR-8 90 Range: 0 - 0.70 mg/L Concentration: 0.05 ppm

Program/Module: 610nm 93 Analysis Time: 1410 Filtered: ☐

Notes:

Nitrite (NO_2^--N):

Concentration: 0.003 ppm

Equipment: DR-850 DR-8 50 Range: 0 - 0.350 mg/L Analysis Time: 1344 Filtered: ☐

Program/Module: 62

Standard Solution: ☐ Results: _____ Reagent Blank Correction: ☐

Notes:

Manganese (Mn^{2+}):

Concentration: 1.8 ppm

Equipment: DR-850 DR-8 50 Range: 0 - 20.0 mg/L Analysis Time: 1414 Filtered: ☐

Program/Module: 525nm 41

Notes:

QA/QC Checklist:

All data fields have been completed as necessary: ☑

Correct measurement units are cited in the SAMPLING DATA block: ☑

Values cited in the SAMPLING DATA block are consistent with the Groundwater Sample Log Sheet: ☑

Mulitplication is correct for each *Multiplier* table: ☑

Final calulated concentration is within the appropriate *Range Used* block: ☑

Alkalinity *Relationship* is determined appropriatly as per manufacturer (HACH) instructions: ☑

QA/QC sample (e.g., Std. Additions, etc.) frequency is appropriate as per the project planning documents: ☑

Nitrite Interference treatment was used for Nitrate test if Nitrite was detected: ☐ NA

Title block on ~~each~~ 1st page of form is initialized by person who performed this QA/QC Checklist: ☑

Tetra Tech NUS, Inc.

GROUNDWATER SAMPLE LOG SHEET

Project Site Name: NSWC CRANE, SWMU13
Project No.: N9060 CTO 0279

[] Domestic Well Data
[X] Monitoring Well Data
[] Other Well Type:
[] QA Sample Type:

Sample ID No.: 13GWT1102
Sample Location: 13MWT11
Sampled By: T. Rojahn
C.O.C. No.: 4822
Type of Sample:
[X] Low Concentration
[] High Concentration

SAMPLING DATA:

Date: 11-20-03	Color (Visual)	pH (S. U.)	S.C. (mS/cm)	Temp. (°C)	Turbidity (NTU)	DO (mg/l)	ORP (mV)	Other NA
Time: 1055								
Method: Peristaltic	CLEAR	3.93	0.238	16.35	4.52	3.49	+355	--

PURGE DATA:

Date: 11-20-03	Volume	pH	S.C.	Temp. (C)	Turbidity	DO	Salinity	Other
Method: Peristaltic								
Monitor Reading (ppm): -								
Well Casing Diameter & Material								
Type: 2" Ø PVC			See Low Flow Purge Data Sheets					
Total Well Depth (TD): 17.75								
Static Water Level (WL): 8.45								
One Casing Volume(gal/L) 5.7								
Start Purge (hrs): 0930								
End Purge (hrs): 1050								
Total Purge Time (min): 80								
Total Vol. Purged (gal/L): 7.65								

SAMPLE COLLECTION INFORMATION:

Analysis	Preservative	Container Requirements	Collected
Explosives SW-846 8330	4°C	(2) L Glass Amber	Yes
Micellaneous Explosives SW-846 8330	4°C	(2) L Glass Amber	Yes
Total Metals SW846 6020/Mercury 7470A	4°C/HNO_3	(1) L HDPE	Yes
Diss. Metals SW846 6020/Mercury 7470A	4°C/HNO_3	(1) L HDPE	NO
Nitrate + Nitrite (asN) EPA 353.2 & Ammonia (asN) EPA 350.1	4°C/H_2SO_4	(1) L HDPE	Yes
Total Organic Carbon	4°C/H_3PO_4	(2) 40ml Vails	NO

OBSERVATIONS / NOTES:

Filtered Sample Collected Yes[] No[X]

17.75 - 8.45 = 9.3 x 0.163 = 1.5 gal or 5.7L

Circle if Applicable:

MS/MSD	Duplicate ID No.:	Signature(s):
—	—	[signature]

Tetra Tech NUS, Inc.

LOW FLOW PURGE DATA SHEET

PROJECT : NSWC CRANE
PROJECT NUMBER: N9060
PROJECT SITE NAME: SWMU 13

WELL ID.: 13 MW T 11
DATE: 11/20/03
WEATHER: Mostly Sunny & Low 40's

Time (Hrs.)	Water Level (Ft. below TOC)	Volume (gal/L)	Flowrate (mL/min)	pH (S.U.)	Cond. (mS/cm)	Turb. (NTU)	DO (mg/L)	Temp. (Celsius)	ORP (mV)	Comments
0930	8.45	—	—	—	—	—	—	—	—	Start Purge
0940	8.78	1.00	100	3.88	0.229	41.5	6.77	15.11	299	CLEAR
0950	9.00	2.00	100	3.86	0.232	18.5	5.26	15.69	312	CLEAR
1000	9.14	2.950	95	3.86	0.227	8.57	4.22	15.70	324	CLEAR
1010	9.28	3.900	95	3.88	0.230	8.10	4.05	15.88	332	CLEAR
1020	9.39	4.850	95	3.90	0.233	7.85	3.92	16.09	340	CLEAR
1030	9.48	5.800	95	3.91	0.235	7.57	3.78	16.21	347	CLEAR
1040	9.53	6.750	95	3.95	0.236	5.11	3.60	16.29	353	CLEAR
1050	9.56	7.650	90	3.93	0.238	4.52	3.49	16.35	355	CLEAR
1055	—	—	—	—	—	—	—	—	—	Start Sampling

Water Quality Meter (S/N) 9981412 AA
Control Box Type (S/N) NA
Turbidity Meter (S/N) 3317-2402

Pump Intake Depth MID SCREEN ~12.75'

SIGNATURE(S): [illegible]

Note: Analyte, method, and/or equipment may be deleted from form if not being performed.

Tetra Tech NUS, Inc.

FIELD ANALYTICAL LOG SHEET
GEOCHEMICAL PARAMETERS

Project Site Name: NSWC CRANE
Project No.: 9060
Sampled By: TK
Field Analyst: TK
Field Form Checked as per QA/QC Checklist (initials): TK

Sample ID No.: 13GWT1102
Sample Location: 13MWT11
Duplicate: ☐
Blank: ☐

SAMPLING DATA:

	Color (Visual)	pH (S.U.)	S.C. (mS/cm)	Temp. (°C)	Turbidity (NTU)	DO (mg/l)	Salinity (%)	ORP (Eh) (+/- mv)
Date: 11-20-03								
Time: 1055								
Method: Peristaltic	CLEAR	3.93	0.238	16.35	4.52	3.49	—	+355

SAMPLE COLLECTION/ANALYSIS INFORMATION:

ORP (Eh) (+/- mv)

Electrode Make & Model: YSI

Reference Electrode (circle one): Silver-Silver Chloride / Calomel / Hydrogen

Dissolved Oxygen:

Equipment: Chemetrics Test Kit

Concentration: 1.5 ppm

Range Used:	Range	Method	Concentration ppm
☐	0 to 1 ppm	K-7510	
☑	1 to 12 ppm	K-7512	1.5

Analysis Time: 1106

Notes:

Alkalinity:

Equipment: Chemetrics Test Kit

Concentration: <10 ppm

Range Used:	Range	Method	Concentration ppm
☑	10 to 100 ppm	K-9810	<10
☑	50 to 500 ppm	K-9815	
☐	100 to 1000 ppm	K-9820	

Analysis Time: 1115

Filtered: ☐

Notes:

Carbon Dioxide:

Equipment: Chemetrics Test Kit

Concentration: 165 ppm

Range Used:	Range	Method	Concentration ppm
☐	10 to 100 ppm	K-1910	
☑	100 to 1000 ppm	K-1920	165
☐	250 to 2500 ppm	K-1925	

Analysis Time: 1120

Notes:

Ferrous Iron (Fe^{2+}):

Equipment: DR-850 DR-8 90 Range: 0 - 3.00 mg/L
Program/Module: 500nm 33

High Limit
Concentration: >3.30 ppm

Analysis Time: 1136

Filtered: ☐

Notes:

Hydrogen Sulfide (H_2S): Range: 0 - 5 mg/L

Equipment: HS-C Other:

Exceeded 5.0 mg/L range on color chart: ☐

Concentration: 0.0 ppm

Analysis Time: 1140

Notes:

Note: Analyte, method, and/or equipment may be deleted from form if not being performed.

FIELD ANALYTICAL LOG SHEET
GEOCHEMICAL PARAMETERS

Tetra Tech NUS, Inc.

Project Site Name:	NSWC CRANE	Sample ID No.:	13GWT1102
Project No.:	9060	Sample Location:	13MWT11
Sampled By:	TR	Duplicate:	☐
Field Analyst:	TK	Blank:	☐

Sulfide (S^{2-}):

Equipment: DR-850 DR-850 Range: 0 - 0.70 mg/L Concentration: 0.01 ppm

Program/Module: 610nm 93 Analysis Time: 1147 Filtered: ☐

Notes:

Nitrite (NO_2^--N):

Concentration: 0.009 ppm

Equipment: DR-850 DR-850 Range: 0 - 0.350 mg/L Analysis Time: 1122 Filtered: ☐

Program/Module: 62

Standard Solution: ☐ Results: _____ Reagent Blank Correction: ☐

Notes:

Manganese (Mn^{2+}):

Concentration: 0.3 ppm

Equipment: DR-850 DR-890 Range: 0 - 20.0 mg/L Analysis Time: 1154 Filtered: ☐

Program/Module: 525nm 41

Notes:

QA/QC Checklist:

All data fields have been completed as necessary: ☑

Correct measurement units are cited in the SAMPLING DATA block: ☑

Values cited in the SAMPLING DATA block are consistent with the Groundwater Sample Log Sheet: ☑

Mulitplication is correct for each *Multiplier* table: ☑

Final calulated concentration is within the appropriate *Range Used* block: ☑

Alkalinity *Relationship* is determined appropriatly as per manufacturer (HACH) instructions: ☑

QA/QC sample (e.g., Std. Additions, etc.) frequency is appropriate as per the project planning documents: ☑

Nitrite Interference treatment was used for Nitrate test if Nitrite was detected: ~~☐~~ HA

Title block on ~~each~~ 1st page of form is initialized by person who performed this QA/QC Checklist: ☑

Tetra Tech NUS, Inc.

GROUNDWATER SAMPLE LOG SHEET

Project Site Name: NSWC CRANE, SWMU13
Project No.: N9060 CTO 0279

[] Domestic Well Data
[X] Monitoring Well Data
[] Other Well Type:
[] QA Sample Type:

Sample ID No.: 13 GWT1202 ~~13GWT1202~~
Sample Location: SWMU 13
Sampled By: Goerdt
C.O.C. No.: 4821
Type of Sample:
[X] Low Concentration
[] High Concentration

SAMPLING DATA:

Date: 11-18-03	Color (Visual)	pH (S. U.)	S.C. (mS/cm)	Temp. (°C)	Turbidity (NTU)	DO (mg/l)	ORP (mV)	Other NA
Time: 1408								
Method: Peristaltic	Slight Sandy	4.87	0.131	16.37	29.1	2.02	305.9	--

PURGE DATA:

Date: 11-18-03	Volume	pH	S.C.	Temp. (C)	Turbidity	DO	Salinity	Other
Method: Peristaltic								
Monitor Reading (ppm): —								
Well Casing Diameter & Material								
Type: 2" Ø PVC			See Low Flow Purge Data Sheets					
Total Well Depth (TD): 22.40								
Static Water Level (WL): 9.81								
One Casing Volume(gal/L): 7.8								
Start Purge (hrs): 1002								
End Purge (hrs): 1402								
Total Purge Time (min): 240								
Total Vol. Purged (gal/L): 21.4								

SAMPLE COLLECTION INFORMATION:

Analysis	Preservative	Container Requirements	Collected
Explosives SW-846 8330	4°C	(2) L Glass Amber	Yes
Micellaneous Explosives SW-846 8330	4°C	(2) L Glass Amber	Yes
Total Metals SW846 6020/Mercury 7470A	4°C/HNO_3	(1) L HDPE	Yes
Diss. Metals SW846 6020/Mercury 7470A	4°C/HNO_3	(1) L HDPE	NO
Nitrate + Nitrite (asN) EPA 353.2 & Ammonia (asN) EPA 350.1	4°C/H_2SO_4	(1) L HDPE	Yes
Total Organic Carbon	4°C/H_3PO_4	(2) 40ml Vails	NO

OBSERVATIONS / NOTES:

Filtered Sample Collected Yes[] No[X]

Turbidity checked prior to filling total metals bottle. Reading of 1.86 (NTU)

22.40 gal
- 9.81 gal
12.59(.163) = 2.05 gal = 7.8 L

Circle if Applicable:

MS/MSD

Duplicate ID No.:

Signature(s): Goerdt

Tetra Tech NUS, Inc.

LOW FLOW PURGE DATA SHEET

PROJECT : NSWC CRANE
PROJECT NUMBER: N9060
PROJECT SITE NAME: SWMU 13

WELL ID.: 13MW T12
DATE: 11-18-03
WEATHER: 55° Rain

Time (Hrs.)	Water Level (Ft. below TOC)	Volume (gal)	Flowrate (mL/min)	pH (S.U.)	Cond. (mS/cm)	Turb. (NTU)	DO (mg/L)	Temp. (Celsius)	ORP (mV)	Comments
0952	9.81	—	—	—	—	—	—	—	—	Start Purge
1002	11.59	1.2	120	4.85	0.135	9.50	1.52	16.20	237	Clear
1012	12.49	2.1	90	4.80	0.126	8.85	1.03	16.19	251.2	"
1022	13.10	3.0	90	4.79	0.125	5.13	1.05	16.21	256.4	"
1032	13.52	3.9	90	4.80	0.124	2.82	1.43	16.20	267.5	"
1042	13.90	4.8	90	4.79	0.123	6.99	1.65	16.19	277.0	"
1052	14.52	5.7	90	4.75	0.125	11.8	1.63	16.19	286.9	" pump off
1102	14.50	6.6	90	4.70	0.129	16.2	1.55	16.17	285.9	"
1112	14.78	7.3	70	4.69	0.133	17.9	1.41	16.10	285.2	" pump off short time
1122	15.10	8.1	80	4.68	0.138	15.1	1.35	16.17	291.5	"
1132	15.22	8.9	80	4.69	0.136	13.1	1.37	15.94	295.0	"
1142	14.97	9.7	80	4.70	0.136	12.8	1.47	15.86	298.6	"
1152	15.12	10.4	80	4.70	0.137	12.6	1.68	15.85	300.3	"
1202	15.48	11.4	80	4.70	0.140	13.2	1.23	16.11	299.1	"
1212	15.86	12.2	80	4.70	0.142	14.3	1.18	16.20	300.8	"
1222	16.19	13.0	80	4.72	0.141	16.7	1.19	16.22	305.3	"
1232	16.54	13.8	80	4.71	0.143	15.3	1.47	16.30	305.5	"
1242	16.84	14.6	80	4.71	0.144	27.5	1.39	16.33	309.3	"
1252	17.18	15.4	80	4.72	0.142	28.3	1.34	16.37	312.4	"
1302	17.49	16.2	80	4.73	0.138	27.2	1.45	16.39	313.4	"
1312	17.82	17.0	80	4.76	0.132	16.9	1.78	16.37	315.0	"
1322	18.14	17.8	80	4.77	0.130	19.8	1.95	16.39	318.9	"

Water Quality Meter (S/N) 98F0478 AB
Control Box Type (S/N) N/A
Turbidity Meter (S/N) 3317-2402

Pump Intake Depth ~1' OFF Bottom
WELL Historically draws down

SIGNATURE(S):

Note: Analyte, method, and/or equipment may be deleted from form if not being performed.

FIELD ANALYTICAL LOG SHEET
GEOCHEMICAL PARAMETERS

Tetra Tech NUS, Inc.

Project Site Name: NSWC CRANE
Project No.: 9060
Sampled By: J.Goerdt
Field Analyst: T.Quinn
Field Form Checked as per QA/QC Checklist (initials): TR

Sample ID No.: 13MWT12 (TR)
Sample Location: 13GWT1202
Duplicate: ☐
Blank: ☐

1.86 prior to sampling Total Metals & Hg

SAMPLING DATA:

	Color (Visual)	pH (S.U.)	S.C. (mS/cm)	Temp. (°C)	Turbidity (NTU)	DO (mg/l)	Salinity (%)	ORP (Eh) (+/- mv)
Date: 11/18/03								
Time: 1408								
Method: Peristaltic	CLEAR	4.87	0.131	16.37	29.1	2.02	—	+305.9

SAMPLE COLLECTION/ANALYSIS INFORMATION:

ORP (Eh) (+/- mv)

Electrode Make & Model: YSI

Reference Electrode (circle one): Silver-Silver Chloride / Calomel / Hydrogen

Dissolved Oxygen:

Equipment: Chemetrics Test Kit

Concentration: 2 ppm

Range Used:	Range	Method	Concentration ppm
☐	0 to 1 ppm	K-7510	
☑	1 to 12 ppm	K-7512	2

Analysis Time: 1430

Notes:

Alkalinity:

Equipment: Chemetrics Test Kit

Concentration: <10 ppm

Range Used:	Range	Method	Concentration ppm
☑	10 to 100 ppm	K-9810	<10
☑	50 to 500 ppm	K-9815	—
☐	100 to 1000 ppm	K-9820	—

Analysis Time: 1439

Filtered: ☐

Notes:

Carbon Dioxide:

Equipment: Chemetrics Test Kit

Concentration: 135 ppm

Range Used:	Range	Method	Concentration ppm
☐	10 to 100 ppm	K-1910	
☑	100 to 1000 ppm	K-1920	135
☐	250 to 2500 ppm	K-1925	

Analysis Time: 1446

Notes:

Ferrous Iron (Fe^{2+}):

Equipment: DR-850 DR-890 Range: 0 - 3.00 mg/L

Program/Module: 500nm 33

Concentration: 0.10 ppm

Analysis Time: 1455

Filtered: ☐

Notes:

Hydrogen Sulfide (H_2S): Range: 0 - 5 mg/L

Equipment: HS-C Other:

Exceeded 5.0 mg/L range on color chart: ☐

Concentration: 0.0 ppm

Analysis Time: 1457

Notes:

Note: Analyte, method, and/or equipment may be deleted from form if not being performed.

FIELD ANALYTICAL LOG SHEET
GEOCHEMICAL PARAMETERS

Tetra Tech NUS, Inc.

Project Site Name: NSWC CRANE
Project No.: N9060
Sampled By: JG
Field Analyst: TR

Sample ID No.: 13GWT1202
Sample Location: 13MWT12
Duplicate: ☐
Blank: ☐

Sulfide (S^{2-}):

Equipment: DR-850 DR-890 Range: 0 - 0.70 mg/L
Program/Module: 610nm 93

Concentration: 0.01 ppm
Analysis Time: 1509
Filtered: ☐

Notes:

Nitrite (NO_2^--N):

Equipment: DR-850 DR-850 Range: 0 - 0.350 mg/L
Program/Module: 62
Standard Solution: ☐ Results: _____

Concentration: 0.000 ppm
Analysis Time: 1441
Filtered: ☐
Reagent Blank Correction: ☐

Notes:

Manganese (Mn^{2+}):

Equipment: DR-850 DR-850 Range: 0 - 20.0 mg/L
Program/Module: 525nm 41

Concentration: 0.4 ppm
Analysis Time: 1514
Filtered: ☐

Notes:

QA/QC Checklist:

All data fields have been completed as necessary: ☑
Correct measurement units are cited in the SAMPLING DATA block: ☑
Values cited in the SAMPLING DATA block are consistent with the Groundwater Sample Log Sheet: ☑
Mulitplication is correct for each *Multiplier* table: ☑
Final calulated concentration is within the appropriate *Range Used* block: ☑
Alkalinity *Relationship* is determined appropriatly as per manufacturer (HACH) instructions: ☑
QA/QC sample (e.g., Std. Additions, etc.) frequency is appropriate as per the project planning documents: ☑
Nitrite Interference treatment was used for Nitrate test if Nitrite was detected: ~~☐~~ NA
Title block on ~~each~~ 1st page of form is initialized by person who performed this QA/QC Checklist: ☑

Tetra Tech NUS, Inc.

GROUNDWATER SAMPLE LOG SHEET

Project Site Name: NSWC CRANE, SWMU13
Project No.: N9060 CTO 0279

[] Domestic Well Data
[X] Monitoring Well Data
[] Other Well Type:
[] QA Sample Type:

Sample ID No.: 13GWT1302
Sample Location: 13GWT13
Sampled By: Goard
C.O.C. No.: 4827
Type of Sample:
[X] Low Concentration
[] High Concentration

SAMPLING DATA:

	Color (Visual)	pH (S. U.)	S.C. (mS/cm)	Temp. (°C)	Turbidity (NTU)	DO (mg/l)	ORP (mV)	Other NA
Date: 11-25-03								
Time: 1150								
Method: Peristaltic	Clear	3.56	0.113	12.33	0.38	3.26	385.1	---

PURGE DATA:

	Volume	pH	S.C.	Temp. (C)	Turbidity	DO	Salinity	Other
Date: 11-25-03								
Method: Peristaltic								
Monitor Reading (ppm): —								
Well Casing Diameter & Material								
Type: 2" Ø PVC			See Low Flow Purge Data Sheets					
Total Well Depth (TD): 21.44								
Static Water Level (WL): 4.49								
One Casing Volume(gal/L): 10.46								
Start Purge (hrs): 1016								
End Purge (hrs): 1146								
Total Purge Time (min): 90								
Total Vol. Purged (gal/L): 10.9								

SAMPLE COLLECTION INFORMATION:

Analysis	Preservative	Container Requirements	Collected
Explosives SW-846 8330	4°C	(2) L Glass Amber	Yes
Micellaneous Explosives SW-846 8330	4°C	(2) L Glass Amber	Yes
Total Metals SW846 6020/Mercury 7470A	4°C/HNO_3	(1) L HDPE	Yes
Diss. Metals SW846 6020/Mercury 7470A	4°C/HNO_3	(1) L HDPE	No
Nitrate + Nitrite (asN) EPA 353.2 & Ammonia (asN) EPA 350.1	4°C/H_2SO_4	(1) L HDPE	Yes
Total Organic Carbon	4°C/H_3PO_4	(2) 40ml Vails	No

OBSERVATIONS / NOTES:

Filtered Sample Collected Yes[] No[X]

21.44
4.99
16.45 (.163) = 2.76 gal = 10.46 L

Circle if Applicable:

MS/MSD	Duplicate ID No.:	Signature(s):
—	—	[signature]

Tetra Tech NUS, Inc.

LOW FLOW PURGE DATA SHEET

PROJECT : NSWC CRANE
PROJECT NUMBER: N9060
PROJECT SITE NAME: SWMU 13

WELL ID.: 13GWT13
DATE: 11-25-03
WEATHER: Partly cloudy 35°

Time (Hrs.)	Water Level (Ft. below TOC)	Volume (gal/L)	Flowrate (mL/min)	pH (S.U.)	Cond. (mS/cm)	Turb. (NTU)	DO (mg/L)	Temp. (Celsius)	ORP (mV)	Comments
1016	4.49	—	—	—	—	—	—	—	—	Start purge
1026	4.50	1.3	1300	4.59	0.140	9.20	3.28	12.20	198.8	Clear
1036	4.51	2.5	1200	3.90	0.104	5.38	3.65	12.19	261.4	"
1046	4.50	3.7	1200	3.75	0.104	3.17	3.59	11.99	297.8	"
1056	4.51	4.9	1200	3.64	0.106	3.10	3.54	12.29	332.7	"
1106	4.50	6.1	1200	3.61	0.109	1.05	3.40	12.85	350.1	"
1116	4.50	7.3	1200	3.35	0.111	1.14	3.39	12.51	365.5	"
1126	4.50	8.5	1200	3.57	0.111	1.25	3.35	12.69	380.8	"
1136	4.50	9.7	1200	3.60	0.112	0.50	3.31	12.22	382.2	"
1146	4.50	10.9	1200	3.56	0.113	0.38	3.26	12.33	385.1	Stop purge

Water Quality Meter (S/N)
Control Box Type (S/N) NA
Turbidity Meter (S/N) 3317 2402

Pump Intake Depth ~16.4'

SIGNATURE(S): [signature]

Note: Analyte, method, and/or equipment may be deleted from form if not being performed.

Tetra Tech NUS, Inc.

FIELD ANALYTICAL LOG SHEET
GEOCHEMICAL PARAMETERS

Project Site Name: NSWC CRANE
Project No.: N9060
Sampled By: J. Goerdt
Field Analyst: T. Rosahal
Field Form Checked as per QA/QC Checklist (initials): TR

Sample ID No.: 13GWT1302
Sample Location: 13MWT13
Duplicate: ☐
Blank: ☐

SAMPLING DATA:

	Color (Visual)	pH (S.U.)	S.C. (mS/cm)	Temp. (°C)	Turbidity (NTU)	DO (mg/l)	Salinity (%)	ORP (Eh) (+/- mv)
Date: 11-25-03								
Time: 1150								
Method: Peristaltic	Clear	3.56	0.113	12.33	0.38	3.26	–	+385.1

SAMPLE COLLECTION/ANALYSIS INFORMATION:

ORP (Eh) (+/- mv)

Electrode Make & Model: YSI

Reference Electrode (circle one): Silver-Silver Chloride / Calomel / Hydrogen

Dissolved Oxygen:

Equipment: Chemetrics Test Kit

Range Used:	Range	Method	Concentration ppm
☐	0 to 1 ppm	K-7510	
☑	1 to 12 ppm	K-7512	11

Concentration: 11 ppm (SG)

Analysis Time: 1654

Notes:

Alkalinity:

Equipment: Chemetrics Test Kit

Range Used:	Range	Method	Concentration ppm
☑	10 to 100 ppm	K-9810	
☐	50 to 500 ppm	K-9815	
☐	100 to 1000 ppm	K-9820	

Concentration: <10 ppm (SG)

Analysis Time: 1658

Filtered: ☐

Notes: Dark Pink @

Carbon Dioxide:

Equipment: Chemetrics Test Kit

Range Used:	Range	Method	Concentration ppm
☐	10 to 100 ppm	K-1910	
☑	100 to 1000 ppm	K-1920	120
☐	250 to 2500 ppm	K-1925	

Concentration: 120 ppm TR

Analysis Time: 1659

Notes:

Ferrous Iron (Fe^{2+}):

Equipment: DR-850 DR-890 Range: 0 - 3.00 mg/L

Program/Module: 500nm 33

Concentration: 0.03 ppm (TR)

Analysis Time: 1701

Filtered: ☐

Notes:

Hydrogen Sulfide (H_2S): Range: 0 - 5 mg/L

Equipment: HS-C Other:

Exceeded 5.0 mg/L range on color chart: ☐

Concentration: 0.0 ppm

Analysis Time: 1703

Notes:

Note: Analyte, method, and/or equipment may be deleted from form if not being performed.

FIELD ANALYTICAL LOG SHEET
GEOCHEMICAL PARAMETERS

Tetra Tech NUS, Inc.

Project Site Name:	NSWC CRANE	Sample ID No.:	13GWT13D2
Project No.:	N9060	Sample Location:	13MWT13
Sampled By:	J.G.	Duplicate:	☐
Field Analyst:	T.R	Blank:	☐

Sulfide (S^{2-}):

Equipment: DR-850 DR-8 90 Range: 0 - 0.70 mg/L Concentration: 0.00 ppm

Program/Module: 610nm 93 Analysis Time: 1717 Filtered: ☐

Notes:

Nitrite (NO_2^--N):

Concentration: 0.000 ppm

Equipment: DR-850 DR-8 50 Range: 0 - 0.350 mg/L Analysis Time: 1709 Filtered: ☐

Program/Module: 62

Standard Solution: ☐ Results: _____ Reagent Blank Correction: ☐

Notes:

Manganese (Mn^{2+}):

Concentration: 0.5 ppm

Equipment: DR-850 DR-8 50 Range: 0 - 20.0 mg/L Analysis Time: 1719 Filtered: ☐

Program/Module: 525nm 41

Notes:

QA/QC Checklist:

All data fields have been completed as necessary: ☑

Correct measurement units are cited in the SAMPLING DATA block: ☑

Values cited in the SAMPLING DATA block are consistent with the Groundwater Sample Log Sheet: ☑

Mulitplication is correct for each *Multiplier* table: ☑

Final calulated concentration is within the appropriate *Range Used* block: ☑

Alkalinity *Relationship* is determined appropriatly as per manufacturer (HACH) instructions: ☑

QA/QC sample (e.g., Std. Additions, etc.) frequency is appropriate as per the project planning documents: ☑

Nitrite Interference treatment was used for Nitrate test if Nitrite was detected: ~~☐~~ NA

Title block on ~~each~~ 1st page of form is initialized by person who performed this QA/QC Checklist: ☑

Tetra Tech NUS, Inc.

GROUNDWATER SAMPLE LOG SHEET

Project Site Name: NSWC CRANE, SWMU13
Project No.: N9060 CTO 0279

[] Domestic Well Data
[X] Monitoring Well Data
[] Other Well Type:
[] QA Sample Type:

Sample ID No.: 13 GWT 1402
Sample Location: 13 MWT 14
Sampled By: S. GRIER
C.O.C. No.: 4825
Type of Sample:
[X] Low Concentration
[] High Concentration

SAMPLING DATA:

	Color (Visual)	pH (S. U.)	S.C. (mS/cm)	Temp. (°C)	Turbidity (NTU)	DO (mg/l)	ORP (mV)	Other NA
Date: 11/24/03								
Time: 1115								
Method: Peristoltic Pump	Clear	5.48	0.623	10.77	0.0	0.52	+100.5	---

PURGE DATA:

	Volume	pH	S.C.	Temp. (C)	Turbidity	DO	Salinity	Other
Date: 11/24/03								
Method: Peristoltic pump								
Monitor Reading (ppm): 0.0								
Well Casing Diameter & Material Type: 2" PVC			See Low Flow Purge Data Sheets					
Total Well Depth (TD): 25.60								
Static Water Level (WL): 14.67								
One Casing Volume (gal/L): 1.78								
Start Purge (hrs): 0935								
End Purge (hrs): 1105								
Total Purge Time (min): 90								
Total Vol. Purged (gal/L): 2.0								

SAMPLE COLLECTION INFORMATION:

Analysis	Preservative	Container Requirements	Collected
Explosives SW-846 8330	4°C	(2) L Glass Amber	Yes
Micellaneous Explosives SW-846 8330	4°C	(2) L Glass Amber	Yes
Total Metals SW846 6020/Mercury 7470A	4°C/HNO_3	(1) L HDPE	Yes
Diss. Metals SW846 6020/Mercury 7470A	4°C/HNO_3	(1) L HDPE	NO
Nitrate + Nitrite (asN) EPA 353.2 & Ammonia (asN) EPA 350.1	4°C/H_2SO_4	(1) L HDPE	Yes
Total Organic Carbon	4°C/H_3PO_4	(2) 40ml Vails	NO

OBSERVATIONS / NOTES:

Filtered Sample Collected Yes [] No

Circle if Applicable:

MS/MSD — Duplicate ID No.:

Signature(s): Scott Grier

Tetra Tech NUS, Inc.

LOW FLOW PURGE DATA SHEET

PROJECT : NSWC CRANE
PROJECT NUMBER: N9060
PROJECT SITE NAME: SWMU 13

WELL ID.: 13 MWT 14
DATE: 11/24/03
WEATHER: Cloudy, Snow flurries, 30°F

Time (Hrs.)	Water Level (Ft. below TOC)	Volume (gal/L)	Flowrate (mL/min)	pH (S.U.)	Cond. (mS/cm)	Turb. (NTU)	DO (mg/L)	Temp. (Celsius)	ORP (mV)	Comments
0935	14.67	~~100~~ 0	100	5.57	0.986	24	1.15	11.90	54.8	Clear, No odor
0945	14.90	–	80	5.52	0.906	20	1.09	11.95	63.9	"
0955	14.92	.65	80	5.47	0.791	13	0.89	10.57	72.1	"
1005	14.93	–	–	5.46	0.796	8.5	0.81	11.04	85.7	"
1015	14.93	1.0	–	5.50	0.703	6.0	0.67	11.94	89.0	"
1025	14.93	–	–	5.50	0.670	3.0	0.56	11.38	93.2	"
1035	14.93	–	–	5.46	0.628	1.2	0.54	10.70	96.6	"
1045	14.94	1.50	–	5.48	0.623	0.0	0.52	10.81	98.0	"
1055	14.94	–	–	5.48	0.624	0.0	0.51	10.78	99.6	"
1105	14.94	2.0	–	5.48	0.623	0.0	0.52	10.77	100.5	"

Water Quality Meter (S/N) 0280141
Control Box Type (S/N) N/A
Turbidity Meter (S/N) 3106-1402

Pump Intake Depth 20.00'

SIGNATURE(S): S. Bruce

Tetra Tech NUS, Inc.

GROUNDWATER SAMPLE LOG SHEET

Project Site Name: NSWC CRANE, SWMU13
Project No.: N9060 CTO 0279

[] Domestic Well Data
[X] Monitoring Well Data
[] Other Well Type:
[] QA Sample Type:

Sample ID No.: 13LaWT1502
Sample Location: 13MWT15
Sampled By: T. ROJAHN
C.O.C. No.: 4827
Type of Sample:
[X] Low Concentration
[] High Concentration

SAMPLING DATA:

	Color (Visual)	pH (S. U.)	S.C. (mS/cm)	Temp. (°C)	Turbidity (NTU)	DO (mg/l)	ORP (mV)	Other NA
Date: 11-25-03								
Time: 1347								
Method: SAME	CLEAR	3.98	0.340	12.28	45.4	7.79	+322	---

PURGE DATA:

	Volume	pH	S.C.	Temp. (C)	Turbidity	DO	Salinity	Other
Date: 11-25-03								
Method: Peristaltic								
Monitor Reading (ppm): –								
Well Casing Diameter & Material Type: 2"Ø PVC			See Low Flow Purge Data Sheets					
Total Well Depth (TD): 27.87								
Static Water Level (WL): 15.62								
One Casing Volume(gal/L) 7.6								
Start Purge (hrs): 0945								
End Purge (hrs): 1345								
Total Purge Time (min): 240								
Total Vol. Purged (gal/L) 18								

SAMPLE COLLECTION INFORMATION:

Analysis	Preservative	Container Requirements	Collected
Explosives SW-846 8330	4°C	(2) L Glass Amber	Yes
Micellaneous Explosives SW-846 8330	4°C	(2) L Glass Amber	Yes
Total Metals SW846 6020/Mercury 7470A	4°C/HNO_3	(1) L HDPE	Yes
Diss. Metals SW846 6020/Mercury 7470A	4°C/HNO_3	(1) L HDPE	YES -F
Nitrate + Nitrite (asN) EPA 353.2 & Ammonia (asN) EPA 350.1	4°C/H_2SO_4	(1) L HDPE	Yes
Total Organic Carbon	4°C/H_3PO_4	3 x (2) 40ml Vails	YES

OBSERVATIONS / NOTES:

Filtered Sample Collected Yes[] No[]

27.87 - 15.63 = 12.24 X .163 = 2 gal or 7.6 L

(TOC only)

Circle if Applicable:

MS/MSD YES

Duplicate ID No.: 13FD11250301

Signature(s): Ty Rojahn

Tetra Tech NUS, Inc.

LOW FLOW PURGE DATA SHEET

PROJECT : NSWC CRANE
PROJECT NUMBER: N9060
PROJECT SITE NAME: SWMU 13

WELL ID.: 13MWT15
DATE: 11-25-03
WEATHER: Partly Cloudy TEMP 32° (AM)

Time (Hrs.)	Water Level (Ft. below TOC)	Volume (gal.)	Flowrate (mL/min)	pH (S.U.)	Cond. (mS/cm)	Turb. (NTU)	DO (mg/L)	Temp. (Celsius)	ORP (mV)	Comments
0945	15.62	--	—	—	—	—	—	-	-	START PURGE
0955	16.53	0.850	85	4.77	0.576	34.5	3.30	10.79	258	CLEAR
1005	17.00	1.700	85	4.75	0.588	16.7	3.16	11.52	261	CLEAR
1015	17.36	2.55	85	4.70	0.587	15.5	2.85	11.92	264	CLEAR
1025	17.46	3.40	85	4.65	0.565	12.7	2.48	10.97	260	CLEAR
1035	17.55	4.25	85	4.65	0.544	24.0	2.71	10.90	261	CLEAR
1045	17.62	4.95	70	4.59	0.524	29.1	3.27	10.81	269	CLEAR
1055	17.68	5.65	70	4.38	0.485	63.8	3.86	10.84	283	V. Sl Cloudy
1105	17.73	6.35	70	4.29	0.450	95.6	4.70	10.89	296	Sl. Cloudy
1115	17.76	7.05	70	4.29	0.441	94.8	5.01	11.23	299	Sl. Cloudy
1125	17.79	7.75	70	4.29	0.438	87.6	5.19	11.45	304	Sl. Cloudy
1135	17.88	8.45	70	4.19	0.417	86.9	5.62	11.65	311	Sl. Cloudy
1145	17.92	9.15	70	4.15	0.402	77.2	5.92	11.70	311	V. Sl. Cloudy
1155	17.95	9.85	70	4.12	0.394	75.0	6.08	11.34	313	V. Sl. Cloudy
1205	18.01	10.55	70	4.10	0.393	84.0	6.09	11.96	313	Sl. Cloudy
1215	18.10	11.75	70	4.09	0.384	81.2	6.26	12.36	313	Sl. Cloudy
1225	18.16	12.45	70	4.08	0.372	68.0	6.73	12.44	316	V. Sl. Cloudy
1235	18.24	13.15	70	4.05	0.368	74.8	6.75	12.22	317	V. Sl. Cloudy
1245	18.20	1385	70	4.06	0.372	65.0	6.46	11.98	316	V. Sl. Cloudy
1255	18.19	14.55	70	4.10	0.367	68.3	6.66	11.95	312	V. Sl. Cloudy
1305	18.19	15.25	70	4.05	0.360	61.7	7.01	12.13	312	V. Sl. Cloudy
1315	18.20	15.95	70	4.03	0.359	63.2	7.06	12.50	314	V. Sl. Cloudy

Water Quality Meter (S/N) 998 1412 AA
Control Box Type (S/N) N/A
Turbidity Meter (S/N) 0920 4298

Pump Intake Depth MID SCREEN ~ 22.9'

SIGNATURE(S): [illegible]

Tetra Tech NUS, Inc.

LOW FLOW PURGE DATA SHEET

PROJECT : NSWC CRANE
PROJECT NUMBER: N9060
PROJECT SITE NAME: SWMU 13

WELL ID.: 13MKIT1502
DATE: 11/25/03
WEATHER: Mostly Cloudy (Temp 30's) PM

Time (Hrs.)	Water Level (Ft. below TOC)	Volume (gal/L)	Flowrate (mL/min)	pH (S.U.)	Cond. (mS/cm)	Turb. (NTU)	DO (mg/L)	Temp. (Celsius)	ORP (mV)	Comments
1325	18.20	16.65	70	4.02	.358	65.1	7.11	12.99	316	V. Sl. Cloudy
1335	18.22	17.35	70	4.00	.347	51.8	7.55	12.52	320	CLEAR
1345	18.23	18.05	70	3.98	.340	45.4	7.79	12.29	322	CLEAR
1347	—	—	—	—	—	—	—	—	—	Start Sampling

Water Quality Meter (S/N) SEE PAGE 2 OF 3
Control Box Type (S/N)
Turbidity Meter (S/N)

Pump Intake Depth ~22.9'

SIGNATURE(S): [illegible]

Note: Analyte, method, and/or equipment may be deleted from form if not being performed.

FIELD ANALYTICAL LOG SHEET
GEOCHEMICAL PARAMETERS

Tetra Tech NUS, Inc.

Project Site Name: NSWC CRANE
Project No.: N9060
Sampled By: T. ROJAHN
Field Analyst: T.A.
Field Form Checked as per QA/QC Checklist (initials): TA

Sample ID No.: 13GWT1502
Sample Location: 13MWT15
Duplicate: ☐
Blank: ☐

SAMPLING DATA:

Date: 11-25-03	Color	pH	S.C.	Temp.	Turbidity	DO	Salinity	ORP (Eh)
Time: 1347	(Visual)	(S.U.)	(mS/cm)	(°C)	(NTU)	(mg/l)	(%)	(+/- mv)
Method: Peristaltic	CLEAR	3.98	0.340	12.28	45.4	7.79	–	+322

SAMPLE COLLECTION/ANALYSIS INFORMATION:

ORP (Eh) (+/- mv)

Electrode Make & Model: YSI

Reference Electrode (circle one): Silver-Silver Chloride / Calomel / Hydrogen

Dissolved Oxygen:

Equipment: Chemetrics Test Kit

Concentration: 0.07 ppm

Range Used:	Range	Method	Concentration ppm
☑	0 to 1 ppm	K-7510	0.07
☑	1 to 12 ppm	K-7512	

Analysis Time: 1356

Notes:

Alkalinity:

Equipment: Chemetrics Test Kit

Concentration: <10 ppm

Range Used:	Range	Method	Concentration ppm
☑	10 to 100 ppm	K-9810	<10
☐	50 to 500 ppm	K-9815	
☐	100 to 1000 ppm	K-9820	

Analysis Time: 1400

Filtered: ☐

Notes: Sol. Bright red @ start

Carbon Dioxide:

Equipment: Chemetrics Test Kit

Concentration: 137 ppm

Range Used:	Range	Method	Concentration ppm
☐	10 to 100 ppm	K-1910	
☑	100 to 1000 ppm	K-1920	137
☐	250 to 2500 ppm	K-1925	

Analysis Time: 1406

Notes:

Ferrous Iron (Fe^{2+}):

Equipment: DR-850 DR-890 Range: 0 - 3.00 mg/L

Program/Module: 500nm 33

Concentration: >3.30 ppm

Analysis Time: 1415

Notes: Limit

Filtered: ☐

Hydrogen Sulfide (H_2S):

Range: 0 - 5 mg/L

Equipment: HS-C Other:

Exceeded 5.0 mg/L range on color chart: ☐

Concentration: 0.0 ppm

Analysis Time: 1418

Notes:

Note: Analyte, method, and/or equipment may be deleted from form if not being performed.

Tetra Tech NUS, Inc.

FIELD ANALYTICAL LOG SHEET
GEOCHEMICAL PARAMETERS

Project Site Name: NSWC CRANE
Project No.: N 9060
Sampled By: T.R.
Field Analyst: TR

Sample ID No.: 13GWT1502
Sample Location: 13MWT15
Duplicate: ☐
Blank: ☐

Sulfide (S^{2-}):

Equipment: DR-850 DR-8 50 Range: 0 - 0.70 mg/L
Program/Module: 610nm 93
Concentration: 0.14 ppm
Analysis Time: 1432 Filtered: ☐
Notes:

Nitrite (NO_2^--N):

Equipment: DR-850 DR-8 59 Range: 0 - 0.350 mg/L
Program/Module: 62
Concentration: 0.001 ppm
Analysis Time: 1418 Filtered: ☐
Standard Solution: ☐ Results: _____
Reagent Blank Correction: ☐
Notes:

Manganese (Mn^{2+}):

Equipment: DR-850 DR-8 90 Range: 0 - 20.0 mg/L
Program/Module: 525nm 41
Concentration: 0.3 ppm
Analysis Time: 1436 Filtered: ☐
Notes:

QA/QC Checklist:

All data fields have been completed as necessary: ☑
Correct measurement units are cited in the SAMPLING DATA block: ☑
Values cited in the SAMPLING DATA block are consistent with the Groundwater Sample Log Sheet: ☑
Mulitplication is correct for each *Multiplier* table: ☑
Final calulated concentration is within the appropriate *Range Used* block: ☑
Alkalinity *Relationship* is determined appropriatly as per manufacturer (HACH) instructions: ☑
QA/QC sample (e.g., Std. Additions, etc.) frequency is appropriate as per the project planning documents: ☑
Nitrite Interference treatment was used for Nitrate test if Nitrite was detected: ☐ NA
Title block on ~~each~~ 1st page of form is initialized by person who performed this QA/QC Checklist: ☑

Tetra Tech NUS, Inc.

GROUNDWATER SAMPLE LOG SHEET

Project Site Name: NSWC CRANE, SWMU13
Project No.: N9060 CTO 0279

[] Domestic Well Data
[X] Monitoring Well Data
[] Other Well Type:
[] QA Sample Type:

Sample ID No.: 136WT1602
Sample Location: 136WT16
Sampled By: Gosrdt
C.O.C. No.: 4822
Type of Sample:
[X] Low Concentration
[] High Concentration

SAMPLING DATA:

	Color (Visual)	pH (S. U.)	S.C. (mS/cm)	Temp. (°C)	Turbidity (NTU)	DO (mg/l)	ORP (mV)	Other NA
Date: 11-20-03								
Time: 1537								
Method: Peristaltic	Clear	6.13	0.402	18.83	8.49	3.87	237.8	---

PURGE DATA:

	Volume	pH	S.C.	Temp. (C)	Turbidity	DO	Salinity	Other
Date: 11-20-03								
Method: Peristaltic								
Monitor Reading (ppm): —								
Well Casing Diameter & Material								
Type: 2" PVC			See Low Flow Purge Data Sheets					
Total Well Depth (TD): 17.31								
Static Water Level (WL): 10.40								
One Casing Volume(gal/L): 4.26								
Start Purge (hrs): 1404								
End Purge (hrs): 1534								
Total Purge Time (min): 90								
Total Vol. Purged (gal/L): 8.2								

SAMPLE COLLECTION INFORMATION:

Analysis	Preservative	Container Requirements	Collected
Explosives SW-846 8330	4°C	(2) L Glass Amber	Yes
Micellaneous Explosives SW-846 8330	4°C	(2) L Glass Amber	Yes
Total Metals SW846 6020/Mercury 7470A	4°C/HNO_3	(1) L HDPE	Yes
Diss. Metals SW846 6020/Mercury 7470A	4°C/HNO_3	(1) L HDPE	NO
Nitrate + Nitrite (asN) EPA 353.2 & Ammonia (asN) EPA 350.1	4°C/H_2SO_4	(1) L HDPE	Yes
Total Organic Carbon	4°C/H_3PO_4	(2) 40ml Vails	NO

OBSERVATIONS / NOTES:

Filtered Sample Collected Yes[] No[X]

17.31
10.40
6.91 (.163) = 1.13 g = 4.26 L

Circle if Applicable:

MS/MSD	Duplicate ID No.:	Signature(s):
—	—	

Tetra Tech NUS, Inc.

LOW FLOW PURGE DATA SHEET

PROJECT : NSWC CRANE
PROJECT NUMBER: N9060
PROJECT SITE NAME: SWMU 13

WELL ID.: 13GWT16
DATE: 11-20-03
WEATHER: Sun 65°

Time (Hrs.)	Water Level (Ft. below TOC)	Volume (gal/L)	Flowrate (mL/min)	pH (S.U.)	Cond. (mS/cm)	Turb. (NTU)	DO (mg/L)	Temp. (Celsius)	ORP (mV)	Comments
1404	10.40	—	—	—	—	—	—	—	—	Start purge
1414	10.78	1.2	120	6.25	0.505	8.30	3.95	18.23	182.6	Clear
1424	11.09	2.0	80	6.19	0.485	4.76	4.17	18.06	209.7	"
1434	11.45	2.8	80	6.01	0.400	1.70	4.83	18.19	278.9	"
1444	11.81	3.7	90	6.00	0.397	0.89	4.84	18.01	278.6	"
1454	12.19	4.6	90	6.04	0.402	0.68	4.41	17.89	258.8	"
1504	12.46	5.5	90	6.06	0.411	0.59	3.92	17.95	253.3	"
1514	12.60	6.4	90	6.05	0.397	6.21	3.59	18.45	248.0	"
1524	12.63	7.3	90	6.06	0.407	6.73	4.08	19.05	245.0	"
1534	12.79	8.2	90	6.13	0.402	8.49	3.87	18.83	237.8	Stop purge

Water Quality Meter (S/N) 98F0478 AB
Control Box Type (S/N) N/A
Turbidity Meter (S/N) 0920 4298

Pump Intake Depth ~14' MID water col.

SIGNATURE(S)

Tetra Tech NUS, Inc.

GROUNDWATER SAMPLE LOG SHEET

Project Site Name: NSWC CRANE, SWMU13
Project No.: N9060 CTO 0279

[] Domestic Well Data
[X] Monitoring Well Data
[] Other Well Type:
[] QA Sample Type:

Sample ID No.: 13GWT1702
Sample Location: 13MWT17
Sampled By: T. ROWAHN
C.O.C. No.: 4816
Type of Sample:
[X] Low Concentration
[] High Concentration

SAMPLING DATA:

Date: 11-05-03	Color (Visual)	pH (S. U.)	S.C. (mS/cm)	Temp. (°C)	Turbidity (NTU)	DO (mg/l)	ORP (mV)	Other NA
Time: 1047								
Method: SAME	CLEAR	5.38	0.153	15.97	3.74	0.84	338	—

PURGE DATA:

Date: 11-5-03	Volume	pH	S.C.	Temp. (C)	Turbidity	DO	Salinity	Other
Method: Peristaltic								
Monitor Reading (ppm): —								
Well Casing Diameter & Material								
Type: 2" Ø PVC			See Low Flow Purge Data Sheets					
Total Well Depth (TD): 20.30								
Static Water Level (WL): 10.83								
One Casing Volume(gal/L): 5.8								
Start Purge (hrs): 0945								
End Purge (hrs): 1045								
Total Purge Time (min): 60								
Total Vol. Purged (gal/L): 6								

SAMPLE COLLECTION INFORMATION:

Analysis	Preservative	Container Requirements	Collected
Explosives SW-846 8330	4°C	(2) L Glass Amber	Yes
Micellaneous Explosives SW-846 8330	4°C	(2) L Glass Amber	Yes
Total Metals SW846 6020/Mercury 7470A	4°C/HNO_3	(1) L HDPE	Yes
Diss. Metals SW846 6020/Mercury 7470A	4°C/HNO_3	(1) L HDPE	NO
Nitrate + Nitrite (asN) EPA 353.2 & Ammonia (asN) EPA 350.1	4°C/H_2SO_4	(1) L HDPE	Yes
Total Organic Carbon	4°C/H_3PO_4	(2) 40ml Vails	NO

OBSERVATIONS / NOTES:

Filtered Sample Collected Yes[] No[]
Pump Intake MID SCREEN
20.3 - 10.83 = 9.47 X 0.163 = 1.5 gal or 5.8L

Circle if Applicable:

MS/MSD	Duplicate ID No.:
—	13FD11050301

Signature(s): [signature]

Tetra Tech NUS, Inc.

LOW FLOW PURGE DATA SHEET

PROJECT SITE NAME: NSWC CRANE
PROJECT NUMBER: N9060, CTO 0279

WELL ID.: 13MWT17
DATE: 11-5-03

Time (Hrs.)	Water Level (Ft. below TOC)	Flow (mL/Min.)	pH (S.U.)	Cond. (mS/cm)	Turb. (NTU)	DO (mg/L)	Temp. (Celsius)	Salinity (%)	ORP (mV)	Comments (Volume & Color)
0945	10.83	–	–	–	–	–	–	NA	–	0ml CLEAR
0955	10.84	100	5.47	0.162	18.3	1.29	15.93	"	282	1000 "
1005	10.84	100	5.41	0.157	14.5	0.98	15.26	"	307	2000 "
1015	10.87	100	5.41	0.156	5.42	1.05	15.67	"	326	3000 "
1025	10.87	100	5.42	0.156	4.09	0.93	15.90	"	338	4000 "
1035	10.87	100	5.40	0.154	4.14	0.86	16.03	"	334	5000 "
1045	10.87	100	5.38	0.153	3.74	0.84	15.97	"	338	6000 "
1047									→	Samples Taken

SIGNATURE(S): [illegible]

Note: Analyte, method, and/or equipment may be deleted from form if not being performed.

FIELD ANALYTICAL LOG SHEET
GEOCHEMICAL PARAMETERS

Tetra Tech NUS, Inc.

Project Site Name: NSWC CRANE
Project No.: N9060
Sampled By: T. ROJAHN
Field Analyst: T. ROJAHN
Field Form Checked as per QA/QC Checklist (initials): TRR

Sample ID No.: 13GWT1702
Sample Location: 13MWT17
Duplicate: ☑
Blank: ☐

SAMPLING DATA:

	Color (Visual)	pH (S.U.)	S.C. (mS/cm)	Temp. (°C)	Turbidity (NTU)	DO (mg/l)	Salinity (%)	ORP (Eh) (+/- mv)
Date: 11-05-03								
Time: 1047								
Method: PERISTALTIC	CLEAR	5.38	0.153	15.97	3.74	0.84	—	338

SAMPLE COLLECTION/ANALYSIS INFORMATION:

ORP (Eh) (+/- mv)

Electrode Make & Model: YSI

Reference Electrode (circle one): Silver-Silver Chloride / Calomel / Hydrogen

Dissolved Oxygen:

Equipment: Chemetrics Test Kit

Concentration: 0.9/0.9 ppm

Range Used:	Range	Method	Concentration ppm
☐	0 to 1 ppm	K-7510	0.9 0.9
☑	1 to 12 ppm	K-7512	>1

Analysis Time: 1050/1052

Notes:

Alkalinity:

Equipment: Chemetrics Test Kit

Concentration: <10/<10 ppm

Range Used:	Range	Method	Concentration ppm
☑	10 to 100 ppm	K-9810	<10/<10
☑	50 to 500 ppm	K-9815	
☑	100 to 1000 ppm	K-9820	

Analysis Time: 1100/1105

Filtered: ☐

Notes: Colorless ~45-48 but no green color

Carbon Dioxide:

Equipment: Chemetrics Test Kit

Concentration: 170/180 ppm

Range Used:	Range	Method	Concentration ppm
☐	10 to 100 ppm	K-1910	
☑	100 to 1000 ppm	K-1920	170/180
☐	250 to 2500 ppm	K-1925	

Analysis Time: 1110/1115

Notes:

Ferrous Iron (Fe^{2+}):

Equipment: DR-850 DR-850 Range: 0 - 3.00 mg/L

Program/Module: 500nm 33

Concentration: 0.06/0.07 ppm

Analysis Time: 1137/1143

Filtered: ☐

Notes:

Hydrogen Sulfide (H_2S): Range: 0 - 5 mg/L

Equipment: HS-C Other:

Exceeded 5.0 mg/L range on color chart: ☐

Concentration: 0.0 ppm

Analysis Time: 1144

Notes:

Note: Analyte, method, and/or equipment may be deleted from form if not being performed.

Tetra Tech NUS, Inc.

FIELD ANALYTICAL LOG SHEET
GEOCHEMICAL PARAMETERS

Project Site Name: NSWC CRANE
Project No.: N9060
Sampled By: T. ROJAHN
Field Analyst: T. ROJAHN

Sample ID No.: 13GWT1702
Sample Location: 13MWT17
Duplicate: ☑
Blank: ☐

Sulfide (S^{2-}):

Equipment: DR-850 DR-8 50 Range: 0 - 0.70 mg/L
Program/Module: 610nm 93
Concentration: 0.02/0.00 ppm
Analysis Time: 1155/1204 Filtered: ☐
Notes:

Nitrite (NO_2^--N):

Equipment: DR-850 DR-8 90 Range: 0 - 0.350 mg/L
Program/Module: 62
Concentration: 0.006/0.006 ppm
Analysis Time: 1210/1228 Filtered: ☐
Standard Solution: ☐ Results: _____
Reagent Blank Correction: ☐
Notes:

Manganese (Mn^{2+}):

Equipment: DR-850 DR-8 50 Range: 0 - 20.0 mg/L
Program/Module: 525nm 41
Concentration: 0.0/0.0 ppm
Analysis Time: 1227/1235 Filtered: ☐
Notes:

QA/QC Checklist:

All data fields have been completed as necessary: ☑
Correct measurement units are cited in the SAMPLING DATA block: ☑
Values cited in the SAMPLING DATA block are consistent with the Groundwater Sample Log Sheet: ☑
Mulitplication is correct for each *Multiplier* table: ☑
Final calulated concentration is within the appropriate *Range Used* block: ☑
Alkalinity *Relationship* is determined appropriatly as per manufacturer (HACH) instructions: ☑
QA/QC sample (e.g., Std. Additions, etc.) frequency is appropriate as per the project planning documents: ☑
Nitrite Interference treatment was used for Nitrate test if Nitrite was detected: ☐ NA
Title block on ~~each~~ 1st page of form is initialized by person who performed this QA/QC Checklist: ☑

Tetra Tech NUS, Inc.

GROUNDWATER SAMPLE LOG SHEET

Project Site Name: NSWC CRANE, SWMU13
Project No.: N9060 CTO 0279

[] Domestic Well Data
[X] Monitoring Well Data
[] Other Well Type:
[] QA Sample Type:

Sample ID No.: 13GWT1802
Sample Location: 13GWT18
Sampled By: Gorzat
C.O.C. No.: 4834
Type of Sample:
[X] Low Concentration
[] High Concentration

SAMPLING DATA:

	Color (Visual)	pH (S. U.)	S.C. (mS/cm)	Temp. (°C)	Turbidity (NTU)	DO (mg/l)	ORP (mV)	Other NA
Date: 12-7-03								
Time: 1538								
Method: Peristaltic	Clear	4.26	0.351	9.78	40.2	4.61	422.2	---

PURGE DATA:

	Volume	pH	S.C.	Temp. (C)	Turbidity	DO	Salinity	Other
Date: 12-7-03								
Method: Peristaltic	16.45	4.26	0.351	9.78	6.71	4.61	—	-
Monitor Reading (ppm): —								
Well Casing Diameter & Material								
Type: 2"ϕ PVC			See Low Flow Purge Data Sheets					
Total Well Depth (TD): 33.27								
Static Water Level (WL): 20.23								
One Casing Volume(gal/L): 8.01								
Start Purge (hrs): 1155								
End Purge (hrs): 1535								
Total Purge Time (min): ~~1538~~ 220								
Total Vol. Purged (gal/L): 1645								

SAMPLE COLLECTION INFORMATION:

Analysis	Preservative	Container Requirements	Collected
Explosives SW-846 8330	4°C	(2) L Glass Amber	Yes
Micellaneous Explosives SW-846 8330	4°C	(2) L Glass Amber	Yes
Total Metals SW846 6020/Mercury 7470A	4°C/HNO_3	(1) L HDPE	Yes
Diss. Metals SW846 6020/Mercury 7470A	4°C/HNO_3	(1) L HDPE	Yes
Nitrate + Nitrite (asN) EPA 353.2 & Ammonia (asN) EPA 350.1	4°C/H_2SO_4	(1) L HDPE	Yes
Total Organic Carbon	4°C/H_3PO_4	(2) 40ml Vails	NO

OBSERVATIONS / NOTES:

Filtered Sample Collected Yes[X] No[]

Turbidity checked prior to purge and it was 40 NTU's. Filtered sample taken.

33.27
20.23
13.04 (.163) = 2.13 gal = 8.01 L

Circle if Applicable:

MS/MSD	Duplicate ID No.:
—	—

Signature(s):

Tetra Tech NUS, Inc.

LOW FLOW PURGE DATA SHEET

PROJECT : NSWC CRANE
PROJECT NUMBER: N9060
PROJECT SITE NAME: SWMU 13

WELL ID.: 13GWT18
DATE: 12-7-03
WEATHER: Sun 39° F

Time (Hrs.)	Water Level (Ft. below TOC)	Volume (gal/L)	Flowrate (mL/min)	pH (S.U.)	Cond. (mS/cm)	Turb. (NTU)	DO (mg/L)	Temp. (Celsius)	ORP (mV)	Comments
1155	20.23	—	—	—	—	—	—	—	—	Start purge
1205	21.99	1.20	1200	4.75	0.320	18.9	2.17	12.26	258.1	clear
1215	23.49	2.15	950	4.79	0.285	4.64	1.19	11.74	282.9	"
1225	23.89	3.05	900	4.79	0.269	5.83	1.48	10.63	308.1	"
1235	24.20	3.95	900	4.76	0.281	38.6	1.52	10.57	314.8	"
1245	24.97	4.95	600	4.67	0.289	40.7	1.28	10.10	327.8	"
1255	25.85	5.85	700	4.68	0.298	42.5	1.13	10.70	326.9	"
1305	25.18	5.95	700	4.57	0.322	69.6	0.97	10.80	346.4	slight cloudy
1315	25.39	6.65	700	4.50	0.339	84.1	0.95	10.97	355.5	"
1325	25.65	7.35	700	4.37	0.363	83.6	0.95	11.09	365.0	"
1335	25.89	8.05	700	4.34	0.368	88.1	0.83	11.02	367.9	
1345	26.19	8.75	700	4.28	0.395	150	0.85	12.18	368.4	cloudy
1355	26.45	9.45	700	4.22	0.413	174	0.85	12.04	371.5	cloudy
1405	27.10	10.15	700	4.25	0.418	186.0	0.83	11.73	373.6	cloudy
1415	27.18	10.85	700	4.26	0.410	120	0.95	11.55	374.4	"
1425	27.26	11.55	700	4.28	0.391	95.4	1.07	10.63	375.8	"
1435	27.39	12.25	700	4.28	0.378	55.5	1.98	10.17	376.9	"
1445	27.39	12.95	700	4.26	0.369	22.7	2.18	10.05	382.7	"
1455	27.38	13.65	700	4.26	0.358	17.5	3.22	9.51	397.4	clear
1505	27.38	14.35	700	4.26	0.357	12.7	3.71	9.63	405.2	"
1515	27.38	15.05	700	4.26	0.354	9.66	4.31	9.83	416.1	"
1525	27.38	15.75	700	4.26	0.354	8.72	4.36	9.85	417.5	"

Water Quality Meter (S/N) 98F0478 AB
Control Box Type (S/N) —
Turbidity Meter (S/N) 3317 2402

Pump Intake Depth 28'

SIGNATURE(S):

Tetra Tech NUS, Inc.

LOW FLOW PURGE DATA SHEET

PROJECT : NSWC CRANE
PROJECT NUMBER: N9060
PROJECT SITE NAME: Swmu 13

WELL ID.: 13GWT~~0002~~ 18 QAD
DATE: 12-7-03
WEATHER: Sun 39° F

Time (Hrs.)	Water Level (Ft. below TOC)	Volume (gal/L)	Flowrate (mL/min)	pH (S.U.)	Cond. (mS/cm)	Turb. (NTU)	DO (mg/L)	Temp. (Celsius)	ORP (mV)	Comments
1535	27.38	16.45	700	4.26	0.351	6.71	4.61	9.78	422.2	clear and stopping

Water Quality Meter (S/N) 98F0478 AB
Control Box Type (S/N) NA
Turbidity Meter (S/N) 3317 2402

Pump Intake Depth 28'

SIGNATURE(S): [signature]

Note: Analyte, method, and/or equipment may be deleted from form if not being performed.

FIELD ANALYTICAL LOG SHEET
GEOCHEMICAL PARAMETERS

Tetra Tech NUS, Inc.

Project Site Name: NSWC CRANE
Project No.: N9060 CTO 279
Sampled By: Goerdt
Field Analyst: Goerdt
Field Form Checked as per QA/QC Checklist (initials): TR

Sample ID No.: 13GWT1802
Sample Location: 13GWT18
Duplicate: ☐ MR
Blank: ☐

SAMPLING DATA:

	Color (Visual)	pH (S.U.)	S.C. (mS/cm)	Temp. (°C)	Turbidity (NTU)	DO (mg/l)	Salinity (%)	ORP (Eh) (+/- mv)
Date: 12-7-03 Time: 1538 Method: Peristaltic	Clear	4.26	0.351	9.78	40.2	4.61	—	422.2

SAMPLE COLLECTION/ANALYSIS INFORMATION:

ORP (Eh) (+/- mv)

Electrode Make & Model: YSI

Reference Electrode (circle one): Silver-Silver Chloride / Calomel / Hydrogen

Dissolved Oxygen:

Equipment: Chemetrics Test Kit

Concentration: 5.5 ppm

Range Used:	Range	Method	Concentration ppm
☐	0 to 1 ppm	K-7510	
☑	1 to 12 ppm	K-7512	5.5

Analysis Time: 1557

Notes:

Alkalinity:

Equipment: Chemetrics Test Kit

Concentration: < 10 ppm

Range Used:	Range	Method	Concentration ppm
☑	10 to 100 ppm	K-9810	< 10
☐	50 to 500 ppm	K-9815	
☐	100 to 1000 ppm	K-9820	

Analysis Time: 16:02

Filtered: ☐

Notes:

Carbon Dioxide:

Equipment: Chemetrics Test Kit

Concentration: 45 ppm

Range Used:	Range	Method	Concentration ppm
☑	10 to 100 ppm	K-1910	45
☐	100 to 1000 ppm	K-1920	
☐	250 to 2500 ppm	K-1925	

Analysis Time: 1609

Notes:

Ferrous Iron (Fe^{2+}):

Equipment: DR-850 DR-8__ Range: 0 - 3.00 mg/L

Program/Module: 500nm 33

Concentration: 0.33 ppm

Analysis Time: 1619

Filtered: ☐

Notes:

Hydrogen Sulfide (H_2S): Range: 0 - 5 mg/L

Equipment: HS-C Other:

Exceeded 5.0 mg/L range on color chart: ☐

Concentration: 0.0 ppm

Analysis Time: 1624

Notes:

Note: Analyte, method, and/or equipment may be deleted from form if not being performed.

FIELD ANALYTICAL LOG SHEET
GEOCHEMICAL PARAMETERS

Tetra Tech NUS, Inc.

Project Site Name:	NSWC CRANE	Sample ID No.:	136WT~~02~~18 02
Project No.:	N9060 CTO 279	Sample Location:	136WT18 M (72)
Sampled By:	Goerdt	Duplicate:	☐
Field Analyst:	Goerdt	Blank:	☐

Sulfide (S^{2-}):

Equipment: DR-850 DR-8 __ Range: 0 - 0.70 mg/L Concentration: 0.07 ppm

Program/Module: 610nm 93 Analysis Time: 1637 Filtered: ☐

Notes:

Nitrite (NO_2^--N):

Concentration: 0.0 ppm

Equipment: DR-850 DR-8 __ Range: 0 - 0.350 mg/L Analysis Time: 1604 Filtered: ☐

Program/Module: 62

Standard Solution: ☐ Results: 0.0 Reagent Blank Correction: ☐

Notes:

Manganese (Mn^{2+}):

Concentration: 1.4 ppm

Equipment: DR-850 DR-8 __ Range: 0 - 20.0 mg/L Analysis Time: 1642 Filtered: ☐

Program/Module: 525nm 41

Notes:

QA/QC Checklist:

All data fields have been completed as necessary: ☑

Correct measurement units are cited in the SAMPLING DATA block: ☑

Values cited in the SAMPLING DATA block are consistent with the Groundwater Sample Log Sheet: ☑

Mulitplication is correct for each *Multiplier* table: ☑

Final calulated concentration is within the appropriate *Range Used* block: ☑

Alkalinity *Relationship* is determined appropriatly as per manufacturer (HACH) instructions: ☑

QA/QC sample (e.g., Std. Additions, etc.) frequency is appropriate as per the project planning documents: ☑

Nitrite Interference treatment was used for Nitrate test if Nitrite was detected: ~~☐~~ NA

Title block on ~~each~~ 1st page of form is initialized by person who performed this QA/QC Checklist: ☑

* MNA taken prior to adjusting tubing in well which caused turbidity to rise. MNA was taken w/ a 6.62 NTU turbidity, therefore not filtered. RD. 12/7/03

Tetra Tech NUS, Inc.

GROUNDWATER SAMPLE LOG SHEET

Project Site Name: NSWC CRANE, SWMU ~~18~~ 13
Project No.: N9060 CTO 0279

[] Domestic Well Data
[X] Monitoring Well Data
[] Other Well Type:
[] QA Sample Type:

Sample ID No.: 13GWT1902 ~~16GWT0502~~
Sample Location: 13MWT19
Sampled By: MGC
C.O.C. No.: 4815
Type of Sample:
[X] Low Concentration
[] High Concentration

SAMPLING DATA:

	Color (Visual)	pH (S. U.)	S.C. (mS/cm)	Temp. (°C)	Turbidity (NTU)	DO (mg/l)	ORP (mV)	Other NA
Date: 10-28-03								
Time: 1555								
Method: PERISTALTIC	CLEAR	4.87	1.210	14.98	5.5	34.37	209.6	---

PURGE DATA:

	Volume	pH	S.C.	Temp. (C)	Turbidity	DO	Salinity	Other
Date: 10-28-03								
Method: PERISTALTIC								
Monitor Reading (ppm): 0								
Well Casing Diameter & Material Type: 2" PVC			See Low Flow Purge Data Sheets					
Total Well Depth (TD): 22.05								
Static Water Level (WL): 11.96								
One Casing Volume(gal/L): 6.22								
Start Purge (hrs): 1410								
End Purge (hrs): 1550								
Total Purge Time (min): 100								
Total Vol. Purged (gal/L): 10								

SAMPLE COLLECTION INFORMATION:

Analysis	Preservative	Container Requirements	Collected
Volatiles SW-846 8260B	4°C/HCl	(3) 40ml Vails	(TB) ~~Yes~~ NO
Volatiles SW-846 8015B	4°C/HCl	(3) 40ml Vails	(TB) ~~Yes~~ NO
Explosives SW-846 8330	4°C	(2) L Glass Amber	Yes
Micellaneous Explosives SW-846 8330	4°C	(2) L Glass Amber	Yes
Total Metals SW846 6020/Mercury 7470A	4°C/HNO_3	(1) L HDPE	Yes
Diss. Metals SW846 6020/Mercury 7470A	4°C/HNO_3	(1) L HDPE	NO
Nitrate + Nitrite (asN) EPA 353.2 & Ammonia	4°C/H_2SO_4	(1) L HDPE	Yes
Sulfate & Chloride	4°C	(1) L HDPE	(TB) ~~Yes~~ NO
Methane, Ethane &Ethene	4°C	(2) 40ml Vails	
Total Organic Carbon	4°C/H_3PO_4	(2) 40ml Vails	

OBSERVATIONS / NOTES:

Filtered Sample Collected Yes[] No[]

Circle if Applicable:

MS/MSD	Duplicate ID No.:	Signature(s):
—	—	

Tetra Tech NUS, Inc.

LOW FLOW PURGE DATA SHEET

PROJECT SITE NAME: NSWC CRANE
PROJECT NUMBER: N9060, CTO 0279

WELL ID.: 13 MW T19
DATE: 10-28-03

Time (Hrs.)	Water Level (Ft. below TOC)	Flow (mL/Min.)	pH (S.U.)	Cond. (mS/cm)	Turb. (NTU)	DO (mg/L)	Temp. (Celsius)	Salinity (%)	ORP (mV)	Comments (Volume & Color)
1410	11.96	150	6.18	1.140	11	37.66	14.70	–	-10.9	0 CLEAR
1420	12.59	100	6.00	1.092	2.8	39.04	14.69	–	1.6	1000
1430	12.59	100	5.82	1.111	3.0	38.38	14.32	–	41.3	2000
1440	12.75	100	5.64	1.140	1.7	39.56	14.40	–	62.2	3000
1450	13.06	100	5.25	1.175	3.2	39.57	14.69	–	134.6	4000
1500	13.10	100	6.20	1.178	3.8	38.84	14.70	–	138.8	5000
1510	13.22	100	5.03	1.192	5.3	38.95	14.81	–	146.5	6000
1520	13.32	100	4.92	1.216	5.8	39.38	14.97	–	170.3	7000
1530	13.47	100	4.86	1.216	5.4	36.80	14.84	–	191.2	8000
1540	13.58	100	4.87	1.213	5.4	34.86	14.76	–	201.2	9000
1550	13.109	100	4.87	1.210	5.5	34.37	14.98	–	209.6	10000

SIGNATURE(S): [signature]

Tetra Tech NUS, Inc.

GROUNDWATER SAMPLE LOG SHEET

Project Site Name: NSWC CRANE, SWMU13
Project No.: N9060 CTO 0279

[] Domestic Well Data
[X] Monitoring Well Data
[] Other Well Type:
[] QA Sample Type:

Sample ID No.: 13GWT2003
Sample Location: 13MWT20
Sampled By: Gerald
C.O.C. No.: 4821
Type of Sample:
[X] Low Concentration
[] High Concentration

SAMPLING DATA:

Date: 11-19-03	Color (Visual)	pH (S. U.)	S.C. (mS/cm)	Temp. (°C)	Turbidity (NTU)	DO (mg/l)	ORP (mV)	Other NA
Time: 1235								
Method: Peristaltic	Clear	3.43	1.30	15.90	6.91	0.76	376.2	--

PURGE DATA:

Date: 11-19-03	Volume	pH	S.C.	Temp. (C)	Turbidity	DO	Salinity	Other
Method: Peristaltic								
Monitor Reading (ppm): –								
Well Casing Diameter & Material								
Type: 2"Ø PVC			See Low Flow Purge Data Sheets					
Total Well Depth (TD): 22.85								
Static Water Level (WL): 4.40								
One Casing Volume(gal/L): 11.39								
Start Purge (hrs): 0828								
End Purge (hrs): 1228								
Total Purge Time (min): 240								
Total Vol. Purged (gal/L): 29.6								

SAMPLE COLLECTION INFORMATION:

Analysis	Preservative	Container Requirements	Collected
Explosives SW-846 8330	4°C	(2) L Glass Amber	Yes
Micellaneous Explosives SW-846 8330	4°C	(2) L Glass Amber	Yes
Total Metals SW846 6020/Mercury 7470A	4°C/HNO_3	(1) L HDPE	Yes
Diss. Metals SW846 6020/Mercury 7470A	4°C/HNO_3	(1) L HDPE	No
Nitrate + Nitrite (asN) EPA 353.2 & Ammonia (asN) EPA 350.1	4°C/H_2SO_4	(1) L HDPE	Yes
Total Organic Carbon	4°C/H_3PO_4	(2) 40ml Vails	No

OBSERVATIONS / NOTES:

Filtered Sample Collected Yes[] No[X]

22.85 ft
4.40 ft
18.45 (.163) = 3.01 g = 11.39 L

Turbidity just prior to total metals was 5.04 NTU.

Circle if Applicable:

MS/MSD ~

Duplicate ID No.: —

Signature(s): [signature]

Tetra Tech NUS, Inc.

LOW FLOW PURGE DATA SHEET

PROJECT : NSWC CRANE
PROJECT NUMBER: N9060
PROJECT SITE NAME: SWMU 13

WELL ID.: 13MW T20
DATE: 11-19-03
WEATHER: Sunny 55° F

Time (Hrs.)	Water Level (Ft. below TOC)	Volume (gal/L)	Flowrate (mL/min)	pH (S.U.)	Cond. (mS/cm)	Turb. (NTU)	DO (mg/L)	Temp. (Celsius)	ORP (mV)	Comments
0828	4.40	—	—	—	—	—	—	—	—	Start purge
0838	5.41	1.1	110	3.93	1.31	18.0	0.98	13.47	30.2	clear
0848	6.12	2.2	110	3.88	1.24	9.71	0.63	13.79	303.6	"
0858	6.69	3.5	120	3.57	1.20	4.95	0.52	13.99	355.9	"
0908	7.09	4.6	110	3.34	1.22	9.40	0.50	14.14	392.5	"
0918	7.34	5.6	100	3.28	1.21	9.72	0.56	14.19	406.6	"
0928	7.62	6.6	100	3.30	1.23	7.85	0.71	14.41	405.2	"
0938	7.85	7.6	100	3.33	1.25	13.3	0.82	14.47	400.0	"
0948	8.10	8.6	100	3.34	1.26	15.9	0.76	14.74	397.8	"
0958	8.31	9.6	100	3.36	1.23	22.7	0.77	14.75	394.7	"
1008	8.51	10.6	100	3.36	1.25	17.5	0.76	14.78	394.1	"
1018	8.73	11.6	100	3.36	1.25	18.5	0.79	15.01	393.8	"
1028	8.91	12.6	100	3.35	1.25	15.6	0.81	15.19	394.5	"
1038	9.11	13.6	100	3.34	1.26	18.8	0.81	15.33	396.6	"
1048	9.31	14.6	100	3.36	1.25	12.2	0.78	15.26	396.7	"
1058	9.47	15.6	100	3.38	1.25	10.7	0.78	15.39	392.9	"
1108	9.67	16.6	100	3.39	1.25	11.0	0.77	15.43	390.4	"
1118	9.91	17.6	100	3.41	1.26	10.0	0.77	15.49	387.4	"
1128	10.09	18.6	100	3.40	1.26	9.82	0.78	15.46	385.9	"
1138	10.31	19.6	100	3.40	1.26	9.66	0.78	15.47	386.4	"
1148	10.51	20.6	100	3.41	1.28	11.7	0.79	15.53	385.7	"
1158	10.52	21.6	100	3.44	1.29	9.71	0.77	15.56	381.7	"

Water Quality Meter (S/N) 98F0478 AB
Control Box Type (S/N) N/A
Turbidity Meter (S/N) 0920-4298

Pump Intake Depth MID SCREEN

SIGNATURE(S): [signature]

Tetra Tech NUS, Inc.

LOW FLOW PURGE DATA SHEET

PROJECT : NSWC CRANE
PROJECT NUMBER: N9060
PROJECT SITE NAME: SWMU 13

WELL ID.: 13MWT20
DATE: 11-19-03
WEATHER: Sun 55° F

Time (Hrs.)	Water Level (Ft. below TOC)	Volume (gal/L)	Flowrate (mL/min)	pH (S.U.)	Cond. (mS/cm)	Turb. (NTU)	DO (mg/L)	Temp. (Celsius)	ORP (mV)	Comments
1208	10.56	22.6	100	3.45	1.28	7.66	0.76	15.56	378.0	Clear
1218	10.60	23.6	100	3.45	1.30	7.24	0.77	15.83	375.9	"
1228	10.65	24.6	100	3.43	1.30	6.91	0.76	15.90	376.2	Stop purge

Water Quality Meter (S/N) 98F0478 AB
Control Box Type (S/N) N/A
Turbidity Meter (S/N) 0920-4298

Pump Intake Depth MID SCREEN

SIGNATURE(S):

Note: Analyte, method, and/or equipment may be deleted from form if not being performed.

Tetra Tech NUS, Inc.

FIELD ANALYTICAL LOG SHEET
GEOCHEMICAL PARAMETERS

Project Site Name: NSWC CRANE
Project No.: 9060
Sampled By: J Goerdt
Field Analyst: TR
Field Form Checked as per QA/QC Checklist (initials): TR

Sample ID No.: 13GWT2003
Sample Location: 13MWT20
Duplicate: ☐
Blank: ☐

SAMPLING DATA:

	Color (Visual)	pH (S.U.)	S.C. (mS/cm)	Temp. (°C)	Turbidity (NTU)	DO (mg/l)	Salinity (%)	ORP (Eh) (+/- mv)
Date: 11-19-03								
Time: 1235								
Method: Peristaltic	CLEAR	3.43	1.30	15.90	6.91	0.76	—	+376.2

SAMPLE COLLECTION/ANALYSIS INFORMATION:

ORP (Eh) (+/- mv)

Electrode Make & Model: VSI

Reference Electrode (circle one): Silver-Silver Chloride / Calomel / Hydrogen

Dissolved Oxygen:

Equipment: Chemetrics Test Kit

Concentration: 0.02 ppm

Range Used:	Range	Method	Concentration ppm
☑	0 to 1 ppm	K-7510	0.02
☑	1 to 12 ppm	K-7512	<1

Analysis Time: 1322

Notes:

Alkalinity:

Equipment: Chemetrics Test Kit

Concentration: <10 ppm

Range Used:	Range	Method	Concentration ppm
☑	10 to 100 ppm	K-9810	<10
☑	50 to 500 ppm	K-9815	
☐	100 to 1000 ppm	K-9820	

Analysis Time: 1329

Filtered: ☐

Notes:

Carbon Dioxide:

Equipment: Chemetrics Test Kit

Concentration: 400 ppm

Range Used:	Range	Method	Concentration ppm
☐	10 to 100 ppm	K-1910	
☑	100 to 1000 ppm	K-1920	400
☐	250 to 2500 ppm	K-1925	

Analysis Time: 1349

Notes:

Ferrous Iron (Fe^{2+}):

Equipment: DR-850 DR-850 Range: 0 - 3.00 mg/L
Program/Module: 500nm 33

>3.30 ppm (Limit)

Concentration: — ppm

Analysis Time: 1419

Filtered: ☐

Notes:

Hydrogen Sulfide (H_2S):

Range: 0 - 5 mg/L

Equipment: HS-C Other:

Exceeded 5.0 mg/L range on color chart: ☐

Concentration: 0.0 ppm

Analysis Time: 1418

Notes:

Note: Analyte, method, and/or equipment may be deleted from form if not being performed.

Tetra Tech NUS, Inc.

FIELD ANALYTICAL LOG SHEET
GEOCHEMICAL PARAMETERS

Project Site Name: NSWC CRANE
Project No.: N9060
Sampled By: J.G.
Field Analyst: T.R.

Sample ID No.: 13GWT2003
Sample Location: 13MWT20
Duplicate: ☐
Blank: ☐

Sulfide (S^{2-}):

Equipment: DR-850 DR-8 90 Range: 0 - 0.70 mg/L
Program/Module: 610nm 93

Concentration: 0.03 ppm
Analysis Time: 1409 Filtered: ☐

Notes:

Nitrite (NO_2^--N):

Equipment: DR-850 DR-8 50 Range: 0 - 0.350 mg/L
Program/Module: 62
Standard Solution: ☐ Results: _____

Concentration: 0.000 ppm
Analysis Time: 1340 Filtered: ☐
Reagent Blank Correction: ☐

Notes:

Manganese (Mn^{2+}):

Equipment: DR-850 DR-8 50 Range: 0 - 20.0 mg/L
Program/Module: 525nm 41

Concentration: 8.3 ppm
Analysis Time: 1429 Filtered: ☐

Notes:

QA/QC Checklist:

All data fields have been completed as necessary: ☑
Correct measurement units are cited in the SAMPLING DATA block: ☑
Values cited in the SAMPLING DATA block are consistent with the Groundwater Sample Log Sheet: ☑
Mulitplication is correct for each *Multiplier* table: ☑
Final calulated concentration is within the appropriate *Range Used* block: ☑
Alkalinity *Relationship* is determined appropriatly as per manufacturer (HACH) instructions: ☑
QA/QC sample (e.g., Std. Additions, etc.) frequency is appropriate as per the project planning documents: ☑
Nitrite Interference treatment was used for Nitrate test if Nitrite was detected: ☐ NA
Title block on ~~each~~ 1st page of form is initialized by person who performed this QA/QC Checklist: ☑

Tetra Tech NUS, Inc.

GROUNDWATER SAMPLE LOG SHEET

Project Site Name: NSWC CRANE, SWMU13
Project No.: N9060 CTO 0279

[] Domestic Well Data
[X] Monitoring Well Data
[] Other Well Type:
[] QA Sample Type:

Sample ID No.: 13GWT2102
Sample Location: 13MWT21
Sampled By: FCW
C.O.C. No.: 4816
Type of Sample:
[X] Low Concentration
[] High Concentration

SAMPLING DATA:

	Color (Visual)	pH (S. U.)	S.C. (mS/cm)	Temp. (°C)	Turbidity (NTU)	DO (mg/l)	ORP (mV)	Other NA
Date: 11-5-03								
Time: 0950								
Method: LOW FLOW	CLEAR	5.59	0.195	15.17	2.61	2.09	247.2	--

PURGE DATA:

	Volume	pH	S.C.	Temp. (C)	Turbidity	DO	Salinity	Other
Date: 11-5-03								
Method: LOW FLOW								
Monitor Reading (ppm): –								
Well Casing Diameter & Material Type: 2" PVC			See Low Flow Purge Data Sheets					
Total Well Depth (TD): 17.76								
Static Water Level (WL): 9.64								
One Casing Volume(gal/L): 1.3								
Start Purge (hrs): 0825								
End Purge (hrs): 0950								
Total Purge Time (min): 85								
Total Vol. Purged (gal/L): 2.2								

SAMPLE COLLECTION INFORMATION:

Analysis	Preservative	Container Requirements	Collected
Explosives SW-846 8330	4°C	(2) L Glass Amber	Yes
Micellaneous Explosives SW-846 8330	4°C	(2) L Glass Amber	Yes
Total Metals SW846 6020/Mercury 7470A	4°C/HNO_3	(1) L HDPE	Yes
Diss. Metals SW846 6020/Mercury 7470A	4°C/HNO_3	(1) L HDPE	~
Nitrate + Nitrite (asN) EPA 353.2 & Ammonia (asN) EPA 350.1	4°C/H_2SO_4	(1) L HDPE	Yes
Total Organic Carbon	4°C/H_3PO_4	(2) 40ml Vails	~

OBSERVATIONS / NOTES:

Filtered Sample Collected Yes[] No[X]
INTAKE MID SCREEN

Circle if Applicable:

MS/MSD

Duplicate ID No.:

Signature(s):

Tetra Tech NUS, Inc.

LOW FLOW PURGE DATA SHEET

PROJECT SITE NAME: NSWC CRANE
PROJECT NUMBER: N9060, CTO 0279

WELL ID.: 13MWT21
DATE: 11-3-03

Time (Hrs.)	Water Level (Ft. below TOC)	Flow (mL/Min.)	pH (S.U.)	Cond. (mS/cm)	Turb. (NTU)	DO (mg/L)	Temp. (Celsius)	Salinity (%)	ORP (mV)	Comments (Volume & Color)
0825	9.64									START
0835	9.90	100	5.63	0.227	37	2.73	16.10	–	218.9	
0845	10.00	110	5.64	0.202	18.9	2.29	15.91	–	208.8	
0855	10.08	↓	5.68	0.203	13.6	2.24	15.94	–	208.0	
0905	10.13		5.72	0.208	10.4	2.28	15.87	–	211.2	
0915	10.12	100	5.69	0.206	8.07	2.25	15.63	–	222.8	
0925	10.14		5.69	0.203	6.04	2.22	15.71	–	223.3	
0935	10.16		5.62	0.198	4.54	2.10	15.50	–	236.2	
0940	10.16		5.58	0.196	4.09	2.13	15.27	–	245.5	
0945	10.16		5.58	0.195	4.26	2.03	15.13	–	247.4	
0950	10.16	↓	5.59	0.195	2.61	2.09	15.17	–	247.2	SAMPLE
1400										END

SIGNATURE(S): [illegible]

Note: Analyte, method, and/or equipment may be deleted from form if not being performed.

FIELD ANALYTICAL LOG SHEET
GEOCHEMICAL PARAMETERS

Tetra Tech NUS, Inc.

Project Site Name: NSWC CRANE
Project No.: 9060
Sampled By: F. WUDKWYCH
Field Analyst: T. ROJAGIN / FW
Field Form Checked as per QA/QC Checklist (initials): TR

Sample ID No.: 13GWTZ102
Sample Location: 13MWTZ1
Duplicate: ☐
Blank: ☐
END SAMPLING ON 11/5 @ 1400 HRS

SAMPLING DATA:

	Color (Visual)	pH (S.U.)	S.C. (mS/cm)	Temp. (°C)	Turbidity (NTU)	DO (mg/l)	Salinity (%)	ORP (Eh) (+/- mv)
Date: 11-05-03								
Time: 0950								
Method: PERISTALTIC	CLEAR	5.59	0.195	15.17	2.61	2.09	~~24~~ FW	+247.2

SAMPLE COLLECTION/ANALYSIS INFORMATION:

ORP (Eh) (+/- mv)
Electrode Make & Model: YSI
Reference Electrode (circle one): Silver-Silver Chloride / Calomel / Hydrogen

Dissolved Oxygen:
Equipment: Chemetrics Test Kit
Concentration: 1 ppm FW
Analysis Time: 1319 11/5/03

Range Used:	Range	Method	Concentration ppm
☑	0 to 1 ppm	K-7510	1
☑	1 to 12 ppm	K-7512	1

Notes:

Alkalinity:
Equipment: Chemetrics Test Kit
Concentration: <10 ppm FW
Analysis Time: 1331
Filtered: ☐

Range Used:	Range	Method	Concentration ppm
☑	10 to 100 ppm	K-9810	<10
☑	50 to 500 ppm	K-9815	
☐	100 to 1000 ppm	K-9820	

Notes:

Carbon Dioxide:
Equipment: Chemetrics Test Kit
Concentration: 125 ppm FW
Analysis Time: 1323

Range Used:	Range	Method	Concentration ppm
☐	10 to 100 ppm	K-1910	
☑	100 to 1000 ppm	K-1920	125
☐	250 to 2500 ppm	K-1925	

Notes:

Ferrous Iron (Fe^{2+}):
Equipment: DR-850 DR-890 Range: 0 - 3.00 mg/L
Program/Module: 500nm 33
Concentration: 0.10 ppm TR
Analysis Time: 1332
Filtered: ☐
Notes:

Hydrogen Sulfide (H_2S): Range: 0 - 5 mg/L
Equipment: HS-C Other:
Exceeded 5.0 mg/L range on color chart: ☐
Concentration: 0.0 ppm FW
Analysis Time: 1335
Notes:

Note: Analyte, method, and/or equipment may be deleted from form if not being performed.

FIELD ANALYTICAL LOG SHEET
GEOCHEMICAL PARAMETERS

Tetra Tech NUS, Inc.

Project Site Name:	NSWC CRANE	Sample ID No.:	13GWT2102
Project No.:	9060	Sample Location:	13MWT21
Sampled By:	F.W	Duplicate:	☐
Field Analyst:	T.R / F.W	Blank:	☐

Sulfide (S^{2-}):

Equipment: DR-850 DR-890 Range: 0 - 0.70 mg/L Concentration: 0.04 ppm

Program/Module: 610nm 93 Analysis Time: 1341 Filtered: ☐

Notes:

Nitrite (NO_2^--N):

Concentration: 0.031 ppm TR

Equipment: DR-850 DR-850 Range: 0 - 0.350 mg/L Analysis Time: 1339 Filtered: ☐

Program/Module: 62

Standard Solution: ☐ Results: _____ Reagent Blank Correction: ☐

Notes:

Manganese (Mn^{2+}):

Concentration: 0.6 ppm

Equipment: DR-850 DR-890 Range: 0 - 20.0 mg/L Analysis Time: 1349 Filtered: ☐

Program/Module: 525nm 41

Notes:

QA/QC Checklist:

All data fields have been completed as necessary: ☑

Correct measurement units are cited in the SAMPLING DATA block: ☑

Values cited in the SAMPLING DATA block are consistent with the Groundwater Sample Log Sheet: ☑

Mulitplication is correct for each *Multiplier* table: ☑

Final calulated concentration is within the appropriate *Range Used* block: ☑

Alkalinity *Relationship* is determined appropriatly as per manufacturer (HACH) instructions: ☑

QA/QC sample (e.g., Std. Additions, etc.) frequency is appropriate as per the project planning documents: ☑

Nitrite Interference treatment was used for Nitrate test if Nitrite was detected: ☐ NA

Title block on ~~each~~ 1st page of form is initialized by person who performed this QA/QC Checklist: ☑

Tetra Tech NUS, Inc.

GROUNDWATER SAMPLE LOG SHEET

Project Site Name: NSWC CRANE, SWMU13
Project No.: N9060 CTO 0279

[] Domestic Well Data
[X] Monitoring Well Data
[] Other Well Type:
[] QA Sample Type:

Sample ID No.: 13GWT2202
Sample Location: 13GWT22
Sampled By: Goyat
C.O.C. No.: 4828
Type of Sample:
[X] Low Concentration
[] High Concentration

SAMPLING DATA:

Date: 12-4-03	Color (Visual)	pH (S. U.)	S.C. (mS/cm)	Temp. (°C)	Turbidity (NTU)	DO (mg/l)	ORP (mV)	Other NA
Time: 1510								
Method: Peristaltic	Clear	4.09	0.243	11.90	1.03	1.65	351.6	---

PURGE DATA:

Date: 12-4-03	Volume	pH	S.C.	Temp. (C)	Turbidity	DO	Salinity	Other
Method: Peristaltic								
Monitor Reading (ppm): —								
Well Casing Diameter & Material								
Type: 2" ϕ PVC			See Low Flow Purge Data Sheets					
Total Well Depth (TD): 17.76								
Static Water Level (WL): 8.45								
One Casing Volume(gal/L) 5.74								
Start Purge (hrs): 1340								
End Purge (hrs): 1455								
Total Purge Time (min): 75								
Total Vol. Purged (gal/L) 7.5								

SAMPLE COLLECTION INFORMATION:

Analysis	Preservative	Container Requirements	Collected
Explosives SW-846 8330	4°C	(2) L Glass Amber	Yes
Micellaneous Explosives SW-846 8330	4°C	(2) L Glass Amber	Yes
Total Metals SW846 6020/Mercury 7470A	4°C/HNO_3	(1) L HDPE	Yes
Diss. Metals SW846 6020/Mercury 7470A	4°C/HNO_3	(1) L HDPE	No
Nitrate + Nitrite (asN) EPA 353.2 & Ammonia (asN) EPA 350.1	4°C/H_2SO_4	(1) L HDPE	Yes
Total Organic Carbon	4°C/H_3PO_4	(2) 40ml Vails	No

OBSERVATIONS / NOTES:

Filtered Sample Collected Yes[] No[]

17.76
8.45
9.31 (.163) = 1.52 gal = 5.74 L

Circle if Applicable:

MS/MSD	Duplicate ID No.:
—	—

Signature(s):

Tetra Tech NUS, Inc.

LOW FLOW PURGE DATA SHEET

PROJECT : NSWC CRANE
PROJECT NUMBER: N9060
PROJECT SITE NAME: SWMU 13

WELL ID.: 13GWT22
DATE: 12-4-03
WEATHER: Overcast 41°C

Time (Hrs.)	Water Level (Ft. below TOC)	Volume (gal/L)	Flowrate (mL/min)	pH (S.U.)	Cond. (mS/cm)	Turb. (NTU)	DO (mg/L)	Temp. (Celsius)	ORP (mV)	Comments
1340	8.45	–	–	–	–	–	–	–	–	Start Purge
1350	8.80	1.1	1100	4.49	0.230	2.72	3.79	12.48	323.9	Clear
1400	8.95	2.2	1100	4.32	0.236	3.60	2.82	12.23	342.8	"
1410	9.11	3.2	1000	4.29	0.234	3.80	2.45	12.42	343.9	"
1420	9.18	4.2	1000	4.21	0.242	3.11	2.16	12.27	348.1	"
1430	9.20	5.2	1000	4.13	0.239	2.44	1.69	11.96	348.6	"
1440	9.23	6.2	1000	4.22	0.239	2.23	2.18	12.01	347.1	"
1445	9.24	6.7	500	4.13	0.242	2.18	1.69	12.00	349.8	"
1450	9.27	7.2	500	4.12	0.247	1.06	1.73	11.70	351.0	"
1455	9.28	7.5	500	4.09	0.243	1.03	1.65	11.90	351.6	Stop purge

Water Quality Meter (S/N) 98F0478 AB
Control Box Type (S/N) N/A
Turbidity Meter (S/N) 3317 2402

Pump Intake Depth ~13'

SIGNATURE(S): [signature]

Note: Analyte, method, and/or equipment may be deleted from form if not being performed.

Tetra Tech NUS, Inc.

FIELD ANALYTICAL LOG SHEET
GEOCHEMICAL PARAMETERS

Project Site Name: NSWC CRANE

Project No.: N9060 <70279

Sampled By: Goardt

Field Analyst: Goardt

Field Form Checked as per QA/QC Checklist (initials): TL

Sample ID No.: 136WT2202

Sample Location: 136WT22

Duplicate: ☒ M (TL)

Blank: ☐

SAMPLING DATA:

	Color (Visual)	pH (S.U.)	S.C. (mS/cm)	Temp. (°C)	Turbidity (NTU)	DO (mg/l)	Salinity (%)	ORP (Eh) (+/- mv)
Date: 12-4-03								
Time: 1510								
Method: Peristaltic	Clear	4.09	0.243	11.40	1.03	1.65	–	+351.6

SAMPLE COLLECTION/ANALYSIS INFORMATION:

ORP (Eh) (+/- mv)

Electrode Make & Model: YSI

Reference Electrode (circle one): Silver-Silver Chloride / Calomel / Hydrogen

Dissolved Oxygen:

Equipment: Chemetrics Test Kit

Concentration: 1.0/1.0 ppm

Analysis Time: 1600/1603

Range Used:	Range	Method	Concentration ppm
☐	0 to 1 ppm	K-7510	
☒	1 to 12 ppm	K-7512	1.0/1.0

Notes:

Alkalinity:

Equipment: Chemetrics Test Kit

Concentration: <10/<10 ppm

Analysis Time: 1546/1550

Filtered: ☐

Range Used:	Range	Method	Concentration ppm
☒	10 to 100 ppm	K-9810	<10/<10
☐	50 to 500 ppm	K-9815	
☐	100 to 1000 ppm	K-9820	

Notes:

Carbon Dioxide:

Equipment: Chemetrics Test Kit

Concentration: 50/70 ppm

Analysis Time: 1609/1615

Range Used:	Range	Method	Concentration ppm
☒	10 to 100 ppm	K-1910	50/70
☐	100 to 1000 ppm	K-1920	
☐	250 to 2500 ppm	K-1925	

Notes:

Ferrous Iron (Fe^{2+}):

Equipment: DR-850 DR-8 __ Range: 0 - 3.00 mg/L

Program/Module: 500nm 33

Concentration: 0.37/0.40 ppm

Analysis Time: 1626/1634

Filtered: ☐

Notes:

Hydrogen Sulfide (H_2S):

Range: 0 - 5 mg/L

Equipment: HS-C Other: _____

Exceeded 5.0 mg/L range on color chart: ☐

Concentration: 0.0/0.0 ppm

Analysis Time: 1639/1644

Notes:

Note: Analyte, method, and/or equipment may be deleted from form if not being performed.

FIELD ANALYTICAL LOG SHEET
GEOCHEMICAL PARAMETERS

Tetra Tech NUS, Inc.

Project Site Name: NSWC CRANE
Project No.: N9060 CTO 279
Sampled By: Goerdt
Field Analyst: Goerdt

Sample ID No.: 136WT2202
Sample Location: 136WT22 /M (T2)
Duplicate: ☒
Blank: ☐

Sulfide (S^{2-}):

Equipment: DR-850 DR-8 __ Range: 0 - 0.70 mg/L
Program/Module: 610nm 93
Concentration: 0.06/0.04 ppm
Analysis Time: 1654/1705 Filtered: ☐
Notes:

Nitrite (NO_2^--N):

Equipment: DR-850 DR-8 __ Range: 0 - 0.350 mg/L
Program/Module: 62
Concentration: 0.005/ ppm 0.001
Analysis Time: 1537/1555 Filtered: ☐
Standard Solution: ☐ Results: 0.005/0.001 Reagent Blank Correction: ☐
Notes:

Manganese (Mn^{2+}):

Equipment: DR-850 DR-8 __ Range: 0 - 20.0 mg/L
Program/Module: 525nm 41
Concentration: 0.1/0.0 ppm
Analysis Time: 1712/1717 Filtered: ☐
Notes:

QA/QC Checklist:

All data fields have been completed as necessary: ☑
Correct measurement units are cited in the SAMPLING DATA block: ☑
Values cited in the SAMPLING DATA block are consistent with the Groundwater Sample Log Sheet: ☑
Mulitplication is correct for each *Multiplier* table: ☑
Final calulated concentration is within the appropriate *Range Used* block: ☑
Alkalinity *Relationship* is determined appropriatly as per manufacturer (HACH) instructions: ☑
QA/QC sample (e.g., Std. Additions, etc.) frequency is appropriate as per the project planning documents: ☑
Nitrite Interference treatment was used for Nitrate test if Nitrite was detected: ☐ N/A
Title block on ~~each~~ 1st page of form is initialized by person who performed this QA/QC Checklist: ☑

Tetra Tech NUS, Inc.

GROUNDWATER SAMPLE LOG SHEET

Project Site Name: NSWC CRANE, SWMU13
Project No.: N9060 CTO 0279

[] Domestic Well Data
[X] Monitoring Well Data
[] Other Well Type:
[] QA Sample Type:

Sample ID No.: 13GWT2302
Sample Location: 13MWT23
Sampled By: FW
C.O.C. No.: 4815
Type of Sample:
[X] Low Concentration
[] High Concentration

SAMPLING DATA:

Date: 10-28-03	Color (Visual)	pH (S. U.)	S.C. (mS/cm)	Temp. (°C)	Turbidity (NTU)	DO (mg/l)	ORP (mV)	Other NA
Time: 1255								
Method: LOW FLOW	CLEAR	5.50	0.329	13.67	2.09	2.37	397.5	---

PURGE DATA:

Date: 10-28-03	Volume	pH	S.C.	Temp. (C)	Turbidity	DO	Salinity	Other
Method: LOW FLOW								
Monitor Reading (ppm): —								
Well Casing Diameter & Material								
Type: 2" PVC			See Low Flow Purge Data Sheets					
Total Well Depth (TD): 24.50								
Static Water Level (WL): 8.98								
One Casing Volume(gal/L): 2.5								
Start Purge (hrs): 0850								
End Purge (hrs): 1255								
Total Purge Time (min): 345								
Total Vol. Purged (gal/L): 7.8								

SAMPLE COLLECTION INFORMATION:

Analysis	Preservative	Container Requirements	Collected
Explosives SW-846 8330	4°C	(2) L Glass Amber	Yes
Micellaneous Explosives SW-846 8330	4°C	(2) L Glass Amber	Yes
Total Metals SW846 6020/Mercury 7470A	4°C/HNO_3	(1) L HDPE	Yes
Diss. Metals SW846 6020/Mercury 7470A	4°C/HNO_3	(1) L HDPE	—
Nitrate + Nitrite (asN) EPA 353.2 & Ammonia (asN) EPA 350.1	4°C/H_2SO_4	(1) L HDPE	Yes
Total Organic Carbon	4°C/H_3PO_4	(2) 40ml Vails	—

OBSERVATIONS / NOTES:

Filtered Sample Collected Yes[] No[X]

Circle if Applicable:

MS/MSD	Duplicate ID No.:
—	—

Signature(s): [illegible]

Tetra Tech NUS, Inc.

LOW FLOW PURGE DATA SHEET

PROJECT SITE NAME: NSWC CRANE
PROJECT NUMBER: N9060, CTO 0279

WELL ID.: 13MWT23
DATE: 10-28-03

Time (Hrs.)	Water Level (Ft. below TOC)	Flow (mL/Min.)	pH (S.U.)	Cond. (mS/cm)	Turb. (NTU)	DO (mg/L)	Temp. (Celsius)	Salinity (%)	ORP (mV)	Comments (Volume & Color)
0850	8.98									START
0900	9.99	~~90~~ 85	5.46	0.349	15.3	2.69	13.68	NA	351.8	
0910	10.64	85	5.41	0.352	12.4	2.47	13.88		363.7	
0920	11.10		5.39	0.350	8.9	2.47	13.78		374.4	
0930	11.41		5.39	0.346	6.54	2.46	13.16		380.2	
0940	11.59		5.40	0.345	5.20	2.44	13.16		384.6	
0950	11.75		5.41	0.346	4.47	2.36	13.34		387.8	
1000	11.92		5.43	0.346	4.49	2.29	13.34		389.3	
1010	12.09		5.44	0.344	4.07	2.22	13.30		392.3	
1020	12.20		5.45	0.343	3.65	2.24	13.49		393.1	
1035	12.38		5.46	0.338	4.39	2.32	13.48		389.4	
1045	12.43		5.47	0.338	3.69	2.37	13.71		386.8	
1055	12.55		5.49	0.337	3.66	2.37	13.71		385.3	
1105	12.63		5.49	0.336	2.81	2.40	13.57		385.6	
1115	12.70		5.49	0.335	2.66	2.42	13.64		385.2	
1125	12.76		5.49	0.333	2.32	2.42	13.47		384.3	
1135	12.80		5.49	0.333	2.81	2.41	13.61		384.5	
1145	12.83		5.49	0.333	2.75	2.39	13.50		384.5	
1155	12.83		5.50	0.333	1.83	2.40	13.63		386.2	
1205	12.84		5.50	0.333	2.32	2.38	13.67		388.0	
1215	12.89		5.50	0.332	1.74	2.40	13.75		390.7	
1225	12.89		5.50	0.332	1.91	2.38	13.92		392.3	
1235	12.77		5.50	0.331	2.12	2.39	13.65		396.1	
1245	12.77		5.50	0.329	1.99	2.34	13.60		396.2	
1255	12.74		5.50	0.329	2.09	2.37	13.67		397.5	SAMPLE
1430										END

SIGNATURE(S): [illegible]

Note: Analyte, method, and/or equipment may be deleted from form if not being performed.

FIELD ANALYTICAL LOG SHEET
GEOCHEMICAL PARAMETERS

Tetra Tech NUS, Inc.

Project Site Name: NSWC CRANE
Project No.: N9060
Sampled By: F. WLJOKWYCH
Field Analyst: T.R. / FW
Field Form Checked as per QA/QC Checklist (initials): TRR

Sample ID No.: 13GWT2302
Sample Location: 13MWT23
Duplicate: ☐
Blank: ☐

SAMPLING DATA:

	Color (Visual)	pH (S.U.)	S.C. (mS/cm)	Temp. (°C)	Turbidity (NTU)	DO (mg/l)	Salinity (%)	ORP (Eh) (+/- mv)
Date: 10/28/03 Time: 1255 Method: Peristaltic	CLEAR	5.50	0.309	13.67	2.09	2.37	~~397~~ 72	+397.5

SAMPLE COLLECTION/ANALYSIS INFORMATION:

ORP (Eh) (+/- mv)
Electrode Make & Model: YSI
Reference Electrode (circle one): Silver-Silver Chloride / Calomel / Hydrogen

Dissolved Oxygen:
Equipment: Chemetrics Test Kit
Concentration: 7 ppm FW
Analysis Time: 1355

Range Used:	Range	Method	Concentration ppm
☐	0 to 1 ppm	K-7510	
☑	1 to 12 ppm	K-7512	7

Notes:

Alkalinity:
Equipment: Chemetrics Test Kit
Concentration: 25 ppm FW
Analysis Time: 1400
Filtered: ☐

Range Used:	Range	Method	Concentration ppm
☑	10 to 100 ppm	K-9810	25
☑	50 to 500 ppm	K-9815	No END Point
☐	100 to 1000 ppm	K-9820	

Notes:

Carbon Dioxide:
Equipment: Chemetrics Test Kit
Concentration: 23 ppm FW
Analysis Time: 1405

Range Used:	Range	Method	Concentration ppm
☑	10 to 100 ppm	K-1910	23
☐	100 to 1000 ppm	K-1920	
☐	250 to 2500 ppm	K-1925	

Notes:

Ferrous Iron (Fe^{2+}):
Equipment: DR-850 DR-890 Range: 0 - 3.00 mg/L
Program/Module: 500nm 33
Concentration: 0.09 ppm
Analysis Time: 1408
Filtered: ☐
Notes:

Hydrogen Sulfide (H_2S): Range: 0 - 5 mg/L
Equipment: HS-C Other:
Exceeded 5.0 mg/L range on color chart: ☐
Concentration: 0.0 ppm
Analysis Time: 1354
Notes:

Note: Analyte, method, and/or equipment may be deleted from form if not being performed.

Tetra Tech NUS, Inc.

FIELD ANALYTICAL LOG SHEET
GEOCHEMICAL PARAMETERS

Project Site Name: NSWC CRANE
Project No.: N9060
Sampled By: FW
Field Analyst: TR / FIW

Sample ID No.: 13GWT2302
Sample Location: ~~13MWT~~ 13MWT23
Duplicate: ☐
Blank: ☐

Sulfide (S^{2-}):

Equipment: DR-850 DR-890 Range: 0 - 0.70 mg/L
Program/Module: 610nm 93
Concentration: 0.01 ppm
Analysis Time: 1432 Filtered: ☐
Notes:

Nitrite (NO_2^--N):

Equipment: DR-850 DR-890 Range: 0 - 0.350 mg/L
Program/Module: 62
Concentration: 0.004 ppm
Analysis Time: 1423 Filtered: ☐
Standard Solution: ☐ Results: _____ Reagent Blank Correction: ☐
Notes:

Manganese (Mn^{2+}):

Equipment: DR-850 DR-890 Range: 0 - 20.0 mg/L
Program/Module: 525nm 41
Concentration: 0.1 ppm
Analysis Time: 1438 Filtered: ☐
Notes:

QA/QC Checklist:

All data fields have been completed as necessary: ☑
Correct measurement units are cited in the SAMPLING DATA block: ☑
Values cited in the SAMPLING DATA block are consistent with the Groundwater Sample Log Sheet: ☑
Mulitplication is correct for each *Multiplier* table: ☑
Final calulated concentration is within the appropriate *Range Used* block: ☑
Alkalinity *Relationship* is determined appropriatly as per manufacturer (HACH) instructions: ☑
QA/QC sample (e.g., Std. Additions, etc.) frequency is appropriate as per the project planning documents: ☑
Nitrite Interference treatment was used for Nitrate test if Nitrite was detected: ☑
Title block on ~~each~~ 1ST page of form is initialized by person who performed this QA/QC Checklist: ☑

Tetra Tech NUS, Inc.

GROUNDWATER SAMPLE LOG SHEET

Project Site Name: NSWC CRANE, SWMU13
Project No.: N9060 CTO 0279

[] Domestic Well Data
[X] Monitoring Well Data
[] Other Well Type:
[] QA Sample Type:

Sample ID No.: 13GWT24OZ
Sample Location: 13MWT24
Sampled By: MGL
C.O.C. No.: 4815
Type of Sample:
[X] Low Concentration
[] High Concentration

SAMPLING DATA:

	Color (Visual)	pH (S. U.)	S.C. (mS/cm)	Temp. (°C)	Turbidity (NTU)	DO (mg/l)	ORP (mV)	Other NA
Date: 10-28-03								
Time: 1045								
Method: PERISTALTIC	CLEAR	6.14	.672	14.27	1.66	29.68	59.9	---

PURGE DATA:

	Volume	pH	S.C.	Temp. (C)	Turbidity	DO	Salinity	Other
Date: 10-28-03								
Method: PERISTALTIC								
Monitor Reading (ppm): 0								
Well Casing Diameter & Material								
Type: 2" PVC			See Low Flow Purge Data Sheets					
Total Well Depth (TD): 25.19								
Static Water Level (WL): 9.49								
One Casing Volume(gal/L): 9.8								
Start Purge (hrs): 0900								
End Purge (hrs): 1045								
Total Purge Time (min): 135								
Total Vol. Purged (gal/L): 10								

SAMPLE COLLECTION INFORMATION:

Analysis	Preservative	Container Requirements	Collected
Explosives SW-846 8330	4°C	(2) L Glass Amber	Yes
Micellaneous Explosives SW-846 8330	4°C	(2) L Glass Amber	Yes
Total Metals SW846 6020/Mercury 7470A	4°C/HNO_3	(1) L HDPE	Yes
Diss. Metals SW846 6020/Mercury 7470A	4°C/HNO_3	(1) L HDPE	NO
Nitrate + Nitrite (asN) EPA 353.2 & Ammonia (asN) EPA 350.1	4°C/H_2SO_4	(1) L HDPE	Yes
Total Organic Carbon	4°C/H_3PO_4	(2) 40ml Vails	

OBSERVATIONS / NOTES:

Filtered Sample Collected Yes[] No[]

Circle if Applicable:

MS/MSD	Duplicate ID No.:	Signature(s):
—	—	[signature]

Tetra Tech NUS, Inc.

LOW FLOW PURGE DATA SHEET

PROJECT SITE NAME: NSWC CRANE
PROJECT NUMBER: N9060, CTO 0279

WELL ID.: 13 MW T24
DATE: 10-28-03

Time (Hrs.)	Water Level (Ft. below TOC)	Flow (mL/Min.)	pH (S.U.)	Cond. (mS/cm)	Turb. (NTU)	DO (mg/L)	Temp. (Celsius)	Salinity (%)	ORP (mV)	Comments (Volume & Color)
0900	~~10~~ 9.49	120	5.92	.885	2.20	26.86	15.10	—	62.3	~~CLEAR~~ 0 CLEAR
0910	10.49	120	5.94	.885	7.08	31.98	15.14	—	56.7	1200 CLEAR
0920	11.51	100	5.99	.874	7.20	33.05	14.93	—	49.8	2400 CLEAR
0930	12.40	120	6.05	.813	3.52	35.41	14.73	—	49.6	3400 CLEAR
0940	12.50	100	6.08	.761	2.52	30.17	14.23	—	51.8	4400 CLEAR
0950	12.53	100	6.09	.727	1.85	38.55	14.36	—	51.9	5400 CLEAR
1000	12.53	100	6.10	.706	.94	32.61	14.26	—	54.6	6400 CLEAR
1010	12.58	100	6.12	.695	.66	29.52	14.26	—	57.8	7400 CLEAR
1020	12.61	100	6.12	.688	.35	30.52	14.37	—	58.0	8400 CLEAR
1030	12.61	100	6.14	.678	.68	29.15	14.37	—	59.4	9400 CLEAR
1040	12.68	100	6.14	.672	1.66	29.68	14.27	—	59.9	10400 CLEAR

SIGNATURE(S): [signature]

Note: Analyte, method, and/or equipment may be deleted from form if not being performed.

FIELD ANALYTICAL LOG SHEET
GEOCHEMICAL PARAMETERS

Tetra Tech NUS, Inc.

Project Site Name: NSWC CRANE
Project No.: N9060
Sampled By: M. COCHRAN
Field Analyst: T. ROJAHN
Field Form Checked as per QA/QC Checklist (initials): TLR

Sample ID No.: 13GWT2402
Sample Location: 13MWT24
Duplicate: ☐
Blank: ☐

SAMPLING DATA:

	Color (Visual)	pH (S.U.)	S.C. (mS/cm)	Temp. (°C)	Turbidity (NTU)	DO (mg/l)	Salinity (%)	ORP (Eh) (+/- mv)
Date: 10-28-03								
Time: 1045								
Method: PERISTALTIC	CLEAR	6.14	0.672	14.27	1.66	29.68	—	529

SAMPLE COLLECTION/ANALYSIS INFORMATION:

ORP (Eh) (+/- mv)

Electrode Make & Model: YSI

Reference Electrode (circle one): Silver-Silver Chloride / Calomel / Hydrogen

Dissolved Oxygen:

Equipment: Chemetrics Test Kit

Concentration: 0.5 ppm

Range Used:	Range	Method	Concentration ppm
☑	0 to 1 ppm	K-7510	0.5
☑	1 to 12 ppm	K-7512	<1

Analysis Time: 1050

Notes:

Alkalinity:

Equipment: Chemetrics Test Kit

Concentration: 90 ppm

Range Used:	Range	Method	Concentration ppm
☐	10 to 100 ppm	K-9810	
☑	50 to 500 ppm	K-9815	90
☐	100 to 1000 ppm	K-9820	

Analysis Time: 1108

Filtered: ☐

Notes:

Carbon Dioxide:

Equipment: Chemetrics Test Kit

Concentration: 28 ppm

Range Used:	Range	Method	Concentration ppm
☑	10 to 100 ppm	K-1910	28
☑	100 to 1000 ppm	K-1920	Lt. Pink @ End Pt.
☐	250 to 2500 ppm	K-1925	

Analysis Time: 1127

Notes:

Ferrous Iron (Fe^{2+}):

Equipment: DR-850 DR-890 Range: 0 - 3.00 mg/L
Program/Module: 500nm 33

Concentration: 3.21 ppm

Analysis Time: 1054

Filtered: ☐

Notes:

Hydrogen Sulfide (H_2S): Range: 0 - 5 mg/L

Equipment: HS-C Other:

Exceeded 5.0 mg/L range on color chart: ☐

Concentration: 0.0 ppm

Analysis Time: 1138

Notes:

Note: Analyte, method, and/or equipment may be deleted from form if not being performed.

FIELD ANALYTICAL LOG SHEET
GEOCHEMICAL PARAMETERS

Tetra Tech NUS, Inc.

Project Site Name:	NSWC CRANE	Sample ID No.:	13GWT2402
Project No.:	N9060	Sample Location:	13MWT24
Sampled By:	MC	Duplicate:	☐
Field Analyst:	TR	Blank:	☐

Sulfide (S^{2-}):

Equipment: DR-850 DR-8 90 Range: 0 - 0.70 mg/L Concentration: 0.00 ppm

Program/Module: 610nm 93 Analysis Time: 1140 Filtered: ☐

Notes:

Nitrite (NO_2^--N):

Concentration: 0.000 ppm

Equipment: DR-850 DR-8 90 Range: 0 - 0.350 mg/L Analysis Time: 1115 Filtered: ☐

Program/Module: 62

Standard Solution: ☐ Results: _____ Reagent Blank Correction: ☐

Notes:

Manganese (Mn^{2+}):

Concentration: 1.8 ppm

Equipment: DR-850 DR-8 90 Range: 0 - 20.0 mg/L Analysis Time: 1151 Filtered: ☐

Program/Module: 525nm 41

Notes:

QA/QC Checklist:

All data fields have been completed as necessary: ☑

Correct measurement units are cited in the SAMPLING DATA block: ☑

Values cited in the SAMPLING DATA block are consistent with the Groundwater Sample Log Sheet: ☑

Mulitplication is correct for each *Multiplier* table: ☑

Final calulated concentration is within the appropriate *Range Used* block: ☑

Alkalinity *Relationship* is determined appropriatly as per manufacturer (HACH) instructions: ☑

QA/QC sample (e.g., Std. Additions, etc.) frequency is appropriate as per the project planning documents: ☑

Nitrite Interference treatment was used for Nitrate test if Nitrite was detected: ☑

Title block on ~~each~~ 1st page of form is initialized by person who performed this QA/QC Checklist: ☑

Tetra Tech NUS, Inc.

GROUNDWATER SAMPLE LOG SHEET

Project Site Name: NSWC CRANE, SWMU13
Project No.: N9060 CTO 0279

[] Domestic Well Data
[X] Monitoring Well Data
[] Other Well Type:
[] QA Sample Type:

Sample ID No.: 13GWT2502 ~~13MWT25~~ (TR)
Sample Location: 13MWT25
Sampled By: T. ROJAHN
C.O.C. No.: 4822
Type of Sample:
[X] Low Concentration
[] High Concentration

SAMPLING DATA:

Date: 11-6-03	Color (Visual)	pH (S. U.)	S.C. (mS/cm)	Temp. (°C)	Turbidity (NTU)	DO (mg/l)	ORP (mV)	Other NA
Time: 0845								
Method: SAMP								---

PURGE DATA:

Date: 11-5-03	Volume	pH	S.C.	Temp. (C)	Turbidity	DO	Salinity	Other
Method: Peristaltic								
Monitor Reading (ppm): –								
Well Casing Diameter & Material								
Type: 2" ø PVC			See Low Flow Purge Data Sheets					
Total Well Depth (TD): 17.95								
Static Water Level (WL): 7.99								
One Casing Volume(gal/L): 6.1								
Start Purge (hrs): 0930								
End Purge (hrs): 0925								
Total Purge Time (min): 55								
Total Vol. Purged (gal/L) 15.2								

SAMPLE COLLECTION INFORMATION:

Analysis	Preservative	Container Requirements	Collected
Explosives SW-846 8330	4°C	WL 16.89 1(2) L Glass Amber 11/6/03	Yes
Micellaneous Explosives SW-846 8330	4°C	11/7 - 0845 (2) L Glass Amber 11/7 8/03	Yes
Total Metals SW846 6020/Mercury 7470A	4°C/HNO_3	11/8 - 0910 (1) L HDPE	Yes
Diss. Metals SW846 6020/Mercury 7470A	4°C/HNO_3	11/19 @ 0820 (1) L HDPE 11/19 @ 0815	YES -F
Nitrate + Nitrite (asN) EPA 353.2 & Ammonia (asN) EPA 350.1	4°C/H_2SO_4	11/20 @ 1610 (1) L HDPE	Yes
Total Organic Carbon	4°C/H_3PO_4	(2) 40ml Vails	N/A

OBSERVATIONS / NOTES:

Filtered Sample Collected Yes[] No[]

17.95 - 7.99 = 9.96 X .163 = 1.62 gal or 6.1 L
Historically this well dries out! W.L. will not stabilize... Pump to dry

WL = 17.53 on 11/9/03 @ 0910

REPURGED ON 11/18/03 by S. Grier - DRIED out w/ 11 ~ 2 L

Circle if Applicable:

MS/MSD —

Duplicate ID No.: —

Signature(s): Ty Rojahn

Tetra Tech NUS, Inc.

LOW FLOW PURGE DATA SHEET

PROJECT SITE NAME: NSWC CRANE
PROJECT NUMBER: N9060, CTO 0279

WELL ID.: 13MWT25
DATE: 11-05-03

Time (Hrs.)	Water Level (Ft. below TOC)	Flow (mL/Min.)	pH (S.U.)	Cond. (mS/cm)	Turb. (NTU)	DO (mg/L)	Temp. (Celsius)	Salinity (%)	ORP (mV)	Comments (Volume & Color)
0830	7.99	200	–	–	–	–	–	–	–	0000 ml CLEAR
0840	9.53	200	5.32	0.407	19.5	1.33	16.32	–	266	2000 ml "
0850	10.60	200	5.56	0.332	6.07	3.88	16.27	–	361	4000 ml "
0900	11.63	200	5.61	0.306	3.61	4.26	16.24	–	386	6000 ml "
0905	12.00	100 *	High draw down - pump to dryness					–	–	6500 ml "
0910	12.95	300	5.67	0.291	6.29	3.27	16.44	–	366	8000 ml "
0920	15.95	480	5.29	0.341	39	0.96	16.70	–	333	12800 ml "
0925	DRY									15200 ml "
	REPURGED	11-18-03								
1345										Dried out WELL (S.Grier)

SIGNATURE(S): [signature]

* Historically this well pumps to dryness... unstable W.L.

Tetra Tech NUS, Inc.

GROUNDWATER SAMPLE LOG SHEET

Project Site Name: NSWC CRANE, SWMU13
Project No.: N9060 CTO 0279

[] Domestic Well Data
[X] Monitoring Well Data
[] Other Well Type:
[] QA Sample Type:

Sample ID No.: 13GWT2602
Sample Location: 13MWLT26
Sampled By: T ROJAHN
C.O.C. No.: 4821
Type of Sample:
[X] Low Concentration
[] High Concentration

SAMPLING DATA:

FINAL @ 1251 HRS

	Color (Visual)	pH (S. U.)	S.C. (mS/cm)	Temp. (°C)	Turbidity (NTU)	DO (mg/l)	ORP (mV)	Other NA
Date: 11/19/03								
Time: 1140								
Method: SAME	CLEAR	5.95	6.333	15.68	9.81	1.70	+354	---

PURGE DATA:

	Volume	pH	S.C.	Temp. (C)	Turbidity	DO	Salinity	Other
Date: 11-19-03								
Method: Peristaltic								
Monitor Reading (ppm): —								
Well Casing Diameter & Material								
Type: 2" Ø			See Low Flow Purge Data Sheets					
Total Well Depth (TD): 22.18								
Static Water Level (WL): 9.96								
One Casing Volume(gal/L) 7.5								
Start Purge (hrs): 0855								
End Purge (hrs): 1135								
Total Purge Time (min): 160								
Total Vol. Purged (gal/L) 13.2								

SAMPLE COLLECTION INFORMATION:

Analysis	Preservative	Container Requirements	Collected
Explosives SW-846 8330	4°C	(2) L Glass Amber	Yes
Micellaneous Explosives SW-846 8330	4°C	(2) L Glass Amber	Yes
Total Metals SW846 6020/Mercury 7470A	4°C/HNO_3	(1) L HDPE	Yes
Diss. Metals SW846 6020/Mercury 7470A	4°C/HNO_3	(1) L HDPE	NO
Nitrate + Nitrite (asN) EPA 353.2 & Ammonia (asN) EPA 350.1	4°C/H_2SO_4	(1) L HDPE	Yes
Total Organic Carbon	4°C/H_3PO_4	(2) 40ml Vails	NO

OBSERVATIONS / NOTES:

Filtered Sample Collected Yes[] No[X]

22.18
9.96
12.22 x 0.163 = 2 gal or 7.5L

Circle if Applicable:

MS/MSD ✓ Duplicate ID No.: —

Signature(s): Ty Rojahn

Tetra Tech NUS, Inc.

LOW FLOW PURGE DATA SHEET

PROJECT : NSWC CRANE
PROJECT NUMBER: N9060
PROJECT SITE NAME: SWMU 13

WELL ID.: 13 MWT 26
DATE: 11/19/03
WEATHER: Mostly Sunny 49° F

Time (Hrs.)	Water Level (Ft. below TOC)	Volume (gal/L)	Flowrate (mL/min)	pH (S.U.)	Cond. (mS/cm)	Turb. (NTU)	DO (mg/L)	Temp. (Celsius)	ORP (mV)	Comments
0855	9.96	—	—	—	—	—	—	—	—	Start Purge
0905	11.49	1.000	100	5.75	0.205	29.7	2.33	14.59	335	CLEAR
0915	12.35	1.850	85	5.76	0.206	8.27	2.05	14.53	336	CLEAR
0925	12.85	2.700	85	5.76	0.205	5.84	1.97	14.68	338	CLEAR
0935	13.13	3.550	85	5.76	0.206	4.78	1.97	14.61	338	CLEAR
0945	13.36	4.400	85	5.78	0.211	6.07	1.92	14.70	336	CLEAR
0955	13.61	5.200	80	5.77	0.217	8.41	1.77	14.88	336	CLEAR
1005	13.86	6.000	80	5.77	0.221	13.00	1.63	14.90	336	CLEAR
1015	14.11	6.800	80	5.80	0.232	18.9	1.52	15.25	338	CLEAR
1025	14.35	7.600	80	5.81	0.235	21.1	1.52	15.38	340	CLEAR
1035	14.57	8.400	80	5.82	0.252	19.7	1.50	15.48	342	CLEAR
1045	14.79	9.200	80	5.85	0.265	19.8	1.48	15.39	344	CLEAR
1055	14.97	10.000	80	5.88	0.274	20.2	1.52	15.38	346	CLEAR
1105	15.14	10.800	80	5.90	0.293	19.5	1.58	15.45	348	CLEAR
1115	15.33	11.600	80	5.92	0.313	17.4	1.61	15.79	352	CLEAR
1120	15.39	12.000	80	5.92	0.316	15.7	1.60	15.89	353	CLEAR
1125	15.49	12.400	80	5.95	0.321	15.6	1.63	15.87	354	CLEAR
1130	15.55	12.800	80	5.95	0.328	16.6	1.68	15.70	354	CLEAR
1135	15.59	13.200	80	5.95	0.333	16.3	1.70	15.68	354	CLEAR
1140	—	—	—	—	—	—	—	—	—	Start Sampling
1251						9.87	Prior	to sampling	Total	metals

Water Quality Meter (S/N) 998 1412 AA
Control Box Type (S/N) NA
Turbidity Meter (S/N) 3317-2402

Pump Intake Depth MID SCREEN ~17'

SIGNATURE(S): [signature]

Note: Analyte, method, and/or equipment may be deleted from form if not being performed.

FIELD ANALYTICAL LOG SHEET
GEOCHEMICAL PARAMETERS

Tetra Tech NUS, Inc.

Project Site Name: NSWC CRANE
Project No.: 9060
Sampled By: TROJAHN
Field Analyst: TROJAHN
Field Form Checked as per QA/QC Checklist (initials): TR

Sample ID No.: 13GWT2602
Sample Location: 13MWT26
Duplicate: ☐
Blank: ☐

SAMPLING DATA:

Date: 11/19/03	Color	pH	S.C.	Temp.	Turbidity	DO	Salinity	ORP (Eh)
Time: 1140	(Visual)	(S.U.)	(mS/cm)	(°C)	(NTU)	(mg/l)	(%)	(+/- mv)
Method: PERISTALTIC	CLEAR	5.95	0.333	15.68	9.81	1.70	—	+354

SAMPLE COLLECTION/ANALYSIS INFORMATION:

ORP (Eh) (+/- mv)

Electrode Make & Model: YSI

Reference Electrode (circle one): Silver-Silver Chloride / Calomel / Hydrogen

Dissolved Oxygen:

Equipment: Chemetrics Test Kit

Concentration: 1.7 ppm

Range Used:	Range	Method	Concentration ppm
☐	0 to 1 ppm	K-7510	
☑	1 to 12 ppm	K-7512	1.7

Analysis Time: 1145

Notes:

Alkalinity:

Equipment: Chemetrics Test Kit

Concentration: 60 ppm

Range Used:	Range	Method	Concentration ppm
☑	10 to 100 ppm	K-9810	60
☐	50 to 500 ppm	K-9815	
☐	100 to 1000 ppm	K-9820	

Analysis Time: 1155

Filtered: ☐

Notes:

Carbon Dioxide:

Equipment: Chemetrics Test Kit

Concentration: 50 ppm

Range Used:	Range	Method	Concentration ppm
☑	10 to 100 ppm	K-1910	50
☑	100 to 1000 ppm	K-1920	
☐	250 to 2500 ppm	K-1925	

Analysis Time: 1204

Notes:

Ferrous Iron (Fe^{2+}):

Equipment: DR-850 (DR-850) Range: 0 - 3.00 mg/L

Program/Module: 500nm 33

Concentration: 0.0 ppm

Analysis Time: 1230

Filtered: ☐

Notes:

Hydrogen Sulfide (H_2S): Range: 0 - 5 mg/L

Equipment: (HS-C) Other: _____

Concentration: 0.0 ppm

Exceeded 5.0 mg/L range on color chart: ☐

Analysis Time: 1223

Notes:

Note: Analyte, method, and/or equipment may be deleted from form if not being performed.

FIELD ANALYTICAL LOG SHEET
GEOCHEMICAL PARAMETERS

Tetra Tech NUS, Inc.

Project Site Name:	NSWC CRANE	Sample ID No.:	13GWT2602
Project No.:	9060	Sample Location:	13MWT26
Sampled By:	TROJAHN	Duplicate:	☐
Field Analyst:	TROJAHN	Blank:	☐

Sulfide (S^{2-}):

Equipment: DR-850 DR-8 50 Range: 0 - 0.70 mg/L Concentration: 0.05 ppm

Program/Module: 610nm 93 Analysis Time: 1240 Filtered: ☐

Notes:

Nitrite (NO_2^--N): Concentration: 0.010 ppm

Equipment: DR-850 DR-8 59 Range: 0 - 0.350 mg/L Analysis Time: 1206 Filtered: ☐

Program/Module: 62

Standard Solution: ☐ Results: _____ Reagent Blank Correction: ☐

Notes:

Manganese (Mn^{2+}): Concentration: 0.3 ppm

Equipment: DR-850 DR-8 90 Range: 0 - 20.0 mg/L Analysis Time: 1242 Filtered: ☐

Program/Module: 525nm 41

Notes:

QA/QC Checklist:

All data fields have been completed as necessary: ☑

Correct measurement units are cited in the SAMPLING DATA block: ☑

Values cited in the SAMPLING DATA block are consistent with the Groundwater Sample Log Sheet: ☑

Mulitplication is correct for each *Multiplier* table: ☑

Final calulated concentration is within the appropriate *Range Used* block: ☑

Alkalinity *Relationship* is determined appropriatly as per manufacturer (HACH) instructions: ☑

QA/QC sample (e.g., Std. Additions, etc.) frequency is appropriate as per the project planning documents: ☑

Nitrite Interference treatment was used for Nitrate test if Nitrite was detected: ☐ NA

Title block on ~~each~~ 1st page of form is initialized by person who performed this QA/QC Checklist: ☑

Tetra Tech NUS, Inc.

GROUNDWATER SAMPLE LOG SHEET

Project Site Name: NSWC CRANE, SWMU13
Project No.: N9060 CTO 0279

[] Domestic Well Data
[X] Monitoring Well Data
[] Other Well Type:
[] QA Sample Type:

Sample ID No.: 13GWT2701
Sample Location: SWMU 13
Sampled By: S. GRIER
C.O.C. No.: 48.27
Type of Sample:
[X] Low Concentration
[] High Concentration

SAMPLING DATA: 9.8, 9.6

	Color (Visual)	pH (S. U.)	S.C. (mS/cm)	Temp. (°C)	Turbidity (NTU)	DO (mg/l)	ORP (mV)	Other NA
Date: 11-25-03								
Time: 1425								
Method: SAME	Cloudy	4.40	0.288	14.29	110	1.67	223.2	--

PURGE DATA:

	Volume	pH	S.C.	Temp. (C)	Turbidity	DO	Salinity	Other
Date: 11/25/03								
Method: Peristoltic pump								
Monitor Reading (ppm): 0.6								
Well Casing Diameter & Material Type: 2" PVC	See Low Flow Purge Data Sheets							
Total Well Depth (TD): 22.40								
Static Water Level (WL): 10.05								
One Casing Volume (gal/L): 2.0								
Start Purge (hrs): 1005								
End Purge (hrs): 1415								
Total Purge Time (min): 250								
Total Vol. Purged (gal/L): 8.5								

SAMPLE COLLECTION INFORMATION:

Analysis	Preservative	Container Requirements	Collected
Explosives SW-846 8330	4°C	(2) L Glass Amber	Yes
Micellaneous Explosives SW-846 8330	4°C	(2) L Glass Amber	Yes
Total Metals SW846 6020/Mercury 7470A	4°C/HNO_3	(1) L HDPE	Yes
Diss. Metals SW846 6020/Mercury 7470A	4°C/HNO_3	(1) L HDPE	NO
Nitrate + Nitrite (asN) EPA 353.2 & Ammonia (asN) EPA 350.1	4°C/H_2SO_4	(1) L HDPE	Yes
Total Organic Carbon	4°C/H_3PO_4	(2) 40ml Vails	NO

OBSERVATIONS / NOTES:

Filtered Sample Collected Yes[] No[X]

After filling the ~~SVOC's~~ Explosives, Nitrate/Nitrite, etc. the turbidity was checked again before filling the Diss. Metals @ 1510 → TURBIDITY = 9.8 therefore the Diss Metals was NOT filtered
1520 → TURB = 9.6

Circle if Applicable:

MS/MSD — Duplicate ID No.: —

Signature(s): Scott Grier

Tetra Tech NUS, Inc.

LOW FLOW PURGE DATA SHEET

PROJECT : NSWC CRANE
PROJECT NUMBER: N9060
PROJECT SITE NAME: SWMU 13

WELL ID.: 13 MWT 27
DATE: 11/25/03
WEATHER: SUNNY, ~~1~~ BREEZE, 28°F

Time (Hrs.)	Water Level (Ft. below TOC)	Volume (gal/L)	Flowrate (mL/min)	pH (S.U.)	Cond. (mS/cm)	Turb. (NTU)	DO (mg/L)	Temp. (Celsius)	ORP (mV)	Comments
1005	10.05	0	100	5.33	0.298	70	2.87	13.94	109.7	Clear, No odor
1015	11.10	—	80	4.88	0.259	59	1.42	13.28	172.6	Pumping slow as
1025	12.10	—	80	4.41	0.294	39	2.17	12.76	223.5	pump allows.
1035	12.65	—	80	4.22	0.227	20	2.23	13.37	263.4	
1045	12.75	1.25	80	4.19	0.207	16	2.24	13.43	281.0	
1055	13.10	—	80	4.24	0.200	12	2.21	13.67	287.0	
1105	13.45	—	80	4.32	0.195	36	2.21	13.69	291.1	
1115	13.65	—	80	4.39	0.196	28	2.26	13.94	284.2	
1125	13.80	2.5	80	4.43	0.199	20	2.16	13.98	283.3	
1135	14.18	—	80	4.45	0.207	17	1.82	14.16	279.7	
1145	14.45	—	80	4.40	0.217	18	1.33	14.02	280.8	
1155	14.70	—	80	4.27	0.224	20	1.12	13.83	288.4	
1205	14.98	3.75	80	4.17	0.227	39	0.98	13.88	296.8	
1215	15.20	—	80	3.82	0.242	75	0.77	14.06	332.6	
1225	15.40	—	80	3.75	0.235	100	0.90	12.79	344.9	
1235	15.60	—	80	3.90	0.241	130	0.77	14.09	328.6	
1245	15.83	5.0	80	4.08	0.239	310	0.79	14.61	296.2	
1255	16.25	—	80	4.55	0.255	450	0.80	14.39	205.4	
1305	16.55	—	80	4.65	0.257	478	0.76	14.34	193.6	
1315	16.85	—	80	4.67	0.268	500	0.61	14.38	195.0	
1325	17.02	7.5	80	4.56	0.278	394	0.58	14.55	203.7	
1335	17.40	—	80	4.46	0.285	330	0.73	14.53	214.3	

Water Quality Meter (S/N) ~~3106-1402~~ 02B0141
Control Box Type (S/N) N/A Peristaltic pump
Turbidity Meter (S/N) 3106-1402

Pump Intake Depth 19.5'

SIGNATURE(S): Scott Grier

Tetra Tech NUS, Inc.

LOW FLOW PURGE DATA SHEET

PROJECT : NSWC CRANE
PROJECT NUMBER: N9060
PROJECT SITE NAME: SWMU 13

WELL ID.: 13 MWT 27
DATE: 11/25/03
WEATHER: Cold, Sunny, Windy, 28°F

Time (Hrs.)	Water Level (Ft. below TOC)	Volume (gal/L)	Flowrate (mL/min)	pH (S.U.)	Cond. (mS/cm)	Turb. (NTU)	DO (mg/L)	Temp. (Celsius)	ORP (mV)	Comments
1345	17.80	~~80~~	80	4.44	0.284	410	0.82	14.39	208.1	
1355	17.85	—	80	4.39	0.285	500	1.15	14.41	216.0	
1405	18.08	—	80	4.37	0.292	300	1.47	14.66	220.0	
1415	18.25	8.5	80	4.40	0.288	110	1.67	14.29	223.2	
1425	sampled									sample 13 GWT 27 taken @ 1425

Water Quality Meter (S/N) 0280141
Control Box Type (S/N) Peristoltic pump
Turbidity Meter (S/N) 3106-1402

Pump Intake Depth 19.5'

SIGNATURE(S): Scott Brier

Tetra Tech NUS, Inc.

GROUNDWATER SAMPLE LOG SHEET

Project Site Name: NSWC CRANE, SWMU13
Project No.: N9060 CTO 0279

[] Domestic Well Data
[X] Monitoring Well Data
[] Other Well Type:
[] QA Sample Type:

Sample ID No.: 13GWT2801
Sample Location: SWMU 13
Sampled By: SG
C.O.C. No.: 4834, 4833
Type of Sample:
[X] Low Concentration
[] High Concentration

SAMPLING DATA:

	Color (Visual)	pH (S. U.)	S.C. (mS/cm)	Temp. (°C)	Turbidity (NTU)	DO (mg/l)	ORP (mV)	Other NA
Date: 12-7-03								
Time: 1410								
Method: SAME	Cloudy	8.15	0.495	13.59	260	0.57	-34.1	---

PURGE DATA:

	Volume	pH	S.C.	Temp. (C)	Turbidity	DO	Salinity	Other
Date: 12/7/03								
Method: Bladder pump								
Monitor Reading (ppm): —								
Well Casing Diameter & Material Type: 2" PVC			See Low Flow Purge Data Sheets					
Total Well Depth (TD): 91.70								
Static Water Level (WL): 80.40								
One Casing Volume (gal/L): 1.84								
Start Purge (hrs): 0930								
End Purge (hrs): 1400								
Total Purge Time (min): 235								
Total Vol. Purged (gal/L): 3.5								

SAMPLE COLLECTION INFORMATION:

Analysis	Preservative	Container Requirements	Collected
Explosives SW-846 8330	4°C	(1) Collected 12-7 (2) L Glass Amber (1) Collected 12-8	Yes
Micellaneous Explosives SW-846 8330	4°C	(2) L Glass Amber	Yes
Total Metals SW846 6020/Mercury 7470A	4°C/HNO_3	(1) L HDPE	Yes
Diss. Metals SW846 6020/Mercury 7470A	4°C/HNO_3	(1) L HDPE	Yes — F
Nitrate + Nitrite (asN) EPA 353.2 & Ammonia (asN) EPA 350.1	4°C/H_2SO_4	(1) L HDPE	Yes
Total Organic Carbon	4°C/H_3PO_4	(2) 40ml Vails	NO

OBSERVATIONS / NOTES:

Filtered Sample Collected Yes[X] No[]

1500 - After collecting 1 L well dried up to pump intake.

(1) Explosive sample collected 12/7 remainder of sample collected 12/8

Circle if Applicable:

MS/MSD — Duplicate ID No.:

Signature(s): Scott Guin

Tetra Tech NUS, Inc.

LOW FLOW PURGE DATA SHEET

PROJECT : NSWC CRANE
PROJECT NUMBER: N9060
PROJECT SITE NAME: SWMU 13

WELL ID.: 13MWT 28
DATE: 12/7/03
WEATHER: P. SUNNY, FOG, 35°F

Time (Hrs.)	Water Level (Ft. below TOC)	Volume (gal/L)	Flowrate (mL/min)	pH (S.U.)	Cond. (mS/cm)	Turb. (NTU)	DO (mg/L)	Temp. (Celsius)	ORP (mV)	Comments
0930	80.88'	0	—	—	—	—	—	—	—	GREY, SLIGHTLY CLOUDY
0935	81.23'	~~80~~	80	8.70	0.504	1000	4.38	8.98	135.8	NO ODOR
0945	81.51'	~~60~~	60	9.25	0.506	900	1.79	8.98	121.8	
0955	81.74'		60	9.31	0.511	900	1.36	9.35	114.2	
1005	82.19'		60	9.35	0.523	850	1.19	9.72	106.3	
1015	82.35'	1.0	60	9.35	0.532	750	1.00	9.82	99.4	
1025	82.72'		60	9.34	0.550	750	1.03	9.89	94.8	
1035	83.01		60	9.32	0.555	725	1.00	9.72	90.9	
1045	83.28'		60	9.30	0.559	700	0.98	9.57	88.0	
1055	83.50		60	9.29	0.565	628	0.91	9.81	84.3	
1105	83.82		60	9.28	0.570	650	0.86	9.93	81.6	
1115	84.12	2.0	60	9.30	0.560	522	0.77	9.81	70.8	
1125	84.42		60	9.34	0.551	450	0.69	9.78	69.9	
1135	84.60			9.39	0.531	400	0.75	9.34	66.6	
1145	—	—	—	—	—	—	—	—	→	1140 Stopped
1215	84.55'		60	9.05	0.530	380	1.32	11.38	26.5	pumping to change
1225	84.78		60	9.18	0.524	370	0.81	11.43	21.8	Nitrogen bottle *
1235	84.97		60	9.28	0.521	360	0.63	11.52	19.5	
1245	85.16		60	9.01	0.515	328	0.55	11.55	6.9	1215 BEGAN
1255	85.36		60	8.81	0.497	310	0.51	11.48	-2.5	PUMPING
1305	85.61		60	8.86	0.499	320	0.55	12.00	-16.0	
1315	85.85	3.0	60	8.93	0.501	330	0.57	12.10	-24.8	

Pump Intake Depth 87.0'

Water Quality Meter (S/N) 02B0141
Control Box Type (S/N) MPU-1550
Turbidity Meter (S/N) 3106-1402

SIGNATURE(S): Scott Bres

Tetra Tech NUS, Inc.

LOW FLOW PURGE DATA SHEET

PROJECT : NSWC CRANE
PROJECT NUMBER: N9060
PROJECT SITE NAME: SWMU 13

WELL ID.: 13MWT28
DATE: 12/7/03
WEATHER: SUNNY, LT. BREEZE, 45°F

Time (Hrs.)	Water Level (Ft. below TOC)	Volume (gal/L)	Flowrate (mL/min)	pH (S.U.)	Cond. (mS/cm)	Turb. (NTU)	DO (mg/L)	Temp. (Celsius)	ORP (mV)	Comments
1325	86.06		60	8.91	0.493	310	0.40	12.33	-33.7	
1335	86.21		60	8.99	0.474	300	0.46	12.09	-38.1	
1345	86.40		60	9.04	0.481	300	0.66	12.94	-39.1	
1355	86.50		60	9.07	0.496	270	0.56	13.84	-36.6	
1400	86.61	3.5	60	9.15	0.495	260	0.57	13.59	-34.1	
										PURGED 4 HRS.

Water Quality Meter (S/N) 02B0141
Control Box Type (S/N) MP10-1550
Turbidity Meter (S/N) 3106-1402

Pump Intake Depth 87.0'

SIGNATURE(S): Scott Brun

Note: Analyte, method, and/or equipment may be deleted from form if not being performed.

FIELD ANALYTICAL LOG SHEET
GEOCHEMICAL PARAMETERS

Tetra Tech NUS, Inc.

Project Site Name: NSWC CRANE
Project No.: N9060
Sampled By: S. GRIER
Field Analyst: TR / JG
Field Form Checked as per QA/QC Checklist (initials): TK

Sample ID No.: 13GWT2801
Sample Location: 13MWT28
Duplicate: ☐
Blank: ☐

SAMPLING DATA:

	Color (Visual)	pH (S.U.)	S.C. (mS/cm)	Temp. (°C)	Turbidity (NTU)	DO (mg/l)	Salinity (%)	ORP (Eh) (+/- mv)
Date: 12-7-03 E 12/8								
Time: 1410								
Method: Bladder Pump	Cloudy	9.15	0.495	13.59	260	0.57	—	-34.1

SAMPLE COLLECTION/ANALYSIS INFORMATION:

ORP (Eh) (+/- mv)
Electrode Make & Model: YSI
Reference Electrode (circle one): Silver-Silver Chloride / Calomel / Hydrogen

Dissolved Oxygen:
Equipment: Chemetrics Test Kit
Concentration: 0.5 ppm

Range Used:	Range	Method	Concentration ppm
☑	0 to 1 ppm	K-7510	0.5
☐	1 to 12 ppm	K-7512	

Analysis Time: 1419 12/7

Notes:

Alkalinity:
Equipment: Chemetrics Test Kit
Concentration: 150 ppm (175)

Range Used:	Range	Method	Concentration ppm
☑	10 to 100 ppm	K-9810	
☑	50 to 500 ppm	K-9815	150
☐	100 to 1000 ppm	K-9820	

Analysis Time: 1426 12/7 (1347)
Filtered: ☑ 12/9

Notes:

Carbon Dioxide:
Equipment: Chemetrics Test Kit
Concentration: <10 ppm

Range Used:	Range	Method	Concentration ppm
☑	10 to 100 ppm	K-1910	<10
☑	100 to 1000 ppm	K-1920	
☐	250 to 2500 ppm	K-1925	

Analysis Time: 1433 12/7

Notes:

Ferrous Iron (Fe^{2+}): 12/9
Equipment: DR-850 DR-8 Range: 0 - 3.00 mg/L
Program/Module: 500nm 33
Concentration: 0.01 ppm
Analysis Time: 1400
Filtered: ☑

Notes:

Hydrogen Sulfide (H_2S): Range: 0 - 5 mg/L 12/9
Equipment: HS-C Other:
Exceeded 5.0 mg/L range on color chart: ☐
Concentration: 0.0 ppm
Analysis Time: 1402

Notes:

Note: Analyte, method, and/or equipment may be deleted from form if not being performed.

FIELD ANALYTICAL LOG SHEET
GEOCHEMICAL PARAMETERS

Tetra Tech NUS, Inc.

Project Site Name: NSWC CRANE
Project No.: N9060
Sampled By: S. GRIER
Field Analyst: TR / JG

Sample ID No.: 13GWT2801
Sample Location: 13MWT28
Duplicate: ☐
Blank: ☐

Sulfide (S^{2-}):

Equipment: DR-850 DR-8 __ Range: 0 - 0.70 mg/L
Concentration: 0.00 ppm
Program/Module: 610nm 93
Analysis Time: 1411
Filtered: ☑ 12/9
Notes:

Nitrite (NO_2^--N):

Concentration: 0.007 ppm
Equipment: DR-850 DR-8 __ Range: 0 - 0.350 mg/L
Analysis Time: 1428 12/7
Filtered: ☑ 12/9
Program/Module: 62
Standard Solution: ☐ Results: _____
Reagent Blank Correction: ☐ 0.108 1354
Notes:

Manganese (Mn^{2+}):

Concentration: 0.0 ppm
Equipment: DR-850 DR-8 __ Range: 0 - 20.0 mg/L
Analysis Time: 1417
Filtered: ☑ 12/9
Program/Module: 525nm 41
Notes:

QA/QC Checklist:

All data fields have been completed as necessary: ☑
Correct measurement units are cited in the SAMPLING DATA block: ☑
Values cited in the SAMPLING DATA block are consistent with the Groundwater Sample Log Sheet: ☑
Mulitplication is correct for each *Multiplier* table: ☑
Final calulated concentration is within the appropriate *Range Used* block: ☑
Alkalinity *Relationship* is determined appropriatly as per manufacturer (HACH) instructions: ☑
QA/QC sample (e.g., Std. Additions, etc.) frequency is appropriate as per the project planning documents: ☑
Nitrite Interference treatment was used for Nitrate test if Nitrite was detected: ☑ NA
Title block on ~~each~~ 1st page of form is initialized by person who performed this QA/QC Checklist: ☑

Tetra Tech NUS, Inc.

GROUNDWATER SAMPLE LOG SHEET

Project Site Name: NSWC CRANE, SWMU13
Project No.: N9060 CTO 0279

[] Domestic Well Data
[X] Monitoring Well Data
[] Other Well Type:
[] QA Sample Type:

Sample ID No.: 13MWT2901
Sample Location: 13MWT29
Sampled By: TROJAHN
C.O.C. No.: 4817
Type of Sample:
[X] Low Concentration
[] High Concentration

SAMPLING DATA:

	Color (Visual)	pH (S. U.)	S.C. (mS/cm)	Temp. (°C)	Turbidity (NTU)	DO (mg/l)	ORP (mV)	Other NA
Date: 11-7-03								
Time: 1205								
Method: SAME	CLEAR	5.56	0.589	15.52	9.36	0.44	-473	---

PURGE DATA:

Date: 11-7-03	Volume	pH	S.C.	Temp. (C)	Turbidity	DO	Salinity	Other
Method: Peristaltic								
Monitor Reading (ppm): —								
Well Casing Diameter & Material								
Type: 2" Ø PVC			See Low Flow Purge Data Sheets					
Total Well Depth (TD): 21.20								
Static Water Level (WL): 6.08								
One Casing Volume(gal/L): 9.3								
Start Purge (hrs): 0935								
End Purge (hrs): 1205								
Total Purge Time (min): 150								
Total Vol. Purged (gal/L): 15								

SAMPLE COLLECTION INFORMATION:

Analysis	Preservative	Container Requirements	Collected
Explosives SW-846 8330	4°C	(2) L Glass Amber	Yes
Micellaneous Explosives SW-846 8330	4°C	(2) L Glass Amber	Yes
Total Metals SW846 6020/Mercury 7470A	4°C/HNO_3	(1) L HDPE	Yes
Diss. Metals SW846 6020/Mercury 7470A	4°C/HNO_3	(1) L HDPE	NO
Nitrate + Nitrite (asN) EPA 353.2 & Ammonia (asN) EPA 350.1	4°C/H_2SO_4	(1) L HDPE	Yes
Total Organic Carbon	4°C/H_3PO_4	(2) 40ml Vails	NO

OBSERVATIONS / NOTES:

Filtered Sample Collected Yes[] No[]

21.2 - 6.08 = 15.12 x 0.163 = 2.46 or 9.3 L
Intake MID SCREEN

Circle if Applicable:

MS/MSD —

Duplicate ID No.: —

Signature(s): [signature]

Tetra Tech NUS, Inc.

LOW FLOW PURGE DATA SHEET

PROJECT SITE NAME: NSWC CRANE
PROJECT NUMBER: N9060, CTO 0279

WELL ID.: 13MW729
DATE: 11/7/03

Time (Hrs.)	Water Level (Ft. below TOC)	Flow (mL/Min.)	pH (S.U.)	Cond. (mS/cm)	Turb. (NTU)	DO (mg/L)	Temp. (Celsius)	Salinity (%)	ORP (mV)	Comments (Volume & Color)
0935	6.08	–	–	–	–	–	–	–	–	Start Purge
0945	6.68	100	5.58	1.37	206	1.39	13.63	–	-470	1000 Cloudy
0955	6.81	100	5.71	0.812	155	1.17	13.72	–	-469	2000 Sl Cloudy
1005	6.93	100	5.90	0.585	83	0.91	13.81	–	-467	3000 V. Sl Cloudy
1015	6.99	100	5.80	0.597	49.3	0.71	13.87	–	-460	4000 Clear
1025	7.03	100	5.83	0.602	30.7	0.63	14.00	–	-450	5000 Clear
1035	7.06	100	5.78	0.600	24.8	0.60	14.23	–	-470	6000 Clear
1045	7.09	100	5.74	0.599	20.2	0.57	14.41	–	-484	7000 Clear
1055	7.12	100	5.71	0.589	16.4	0.67	14.40	–	-494	8000 Clear
1105	7.12	100	5.69	0.588	16.2	0.60	14.50	–	-494	9000 Clear
1115	7.12	100	5.67	0.588	16.0	0.55	14.55	–	-494	10000 Clear
1125	7.15	100	5.67	0.595	14.0	0.52	15.16	–	-479	11000 Clear
1135	7.18	100	5.68	0.592	12.3	0.50	15.14	–	-488	12000 Clear
1145	7.18	100	5.62	0.590	11.4	0.46	15.20	–	-488	13000 Clear
1155	7.19	100	5.59	0.587	11.7	0.45	15.42	–	-473	14000 Clear
1205	7.22	100	5.56	0.589	9.36	0.44	15.52	–	-473	15000 Clear
1205										Sample Time

SIGNATURE(S): [illegible]

Note: Analyte, method, and/or equipment may be deleted from form if not being performed.

FIELD ANALYTICAL LOG SHEET
GEOCHEMICAL PARAMETERS

Tetra Tech NUS, Inc.

Project Site Name: NSWC CRANE
Project No.: N9060
Sampled By: T. ROJAHN
Field Analyst: T. ROJAHN
Field Form Checked as per QA/QC Checklist (initials): TLR

Sample ID No.: 13GWT2901
Sample Location: 13MWT29
Duplicate: ☐
Blank: ☐

SAMPLING DATA:

	Color (Visual)	pH (S.U.)	S.C. (mS/cm)	Temp. (°C)	Turbidity (NTU)	DO (mg/l)	Salinity (%)	ORP (Eh) (+/- mv)
Date: 11/7/03 Time: 1205 Method: PERISTALTIC	CLEAR	5.56	0.589	15.52	9.36	0.44	—	-473

SAMPLE COLLECTION/ANALYSIS INFORMATION:

ORP (Eh) (+/- mv)

Electrode Make & Model: YSI 600XLM

Reference Electrode (circle one): Silver-Silver Chloride / Calomel / Hydrogen

Dissolved Oxygen:

Equipment: Chemetrics Test Kit

Concentration: 0.02 ppm

Range Used:	Range	Method	Concentration ppm
☑	0 to 1 ppm	K-7510	
☑	1 to 12 ppm	K-7512	

Analysis Time: 1214

Notes:

Alkalinity:

Equipment: Chemetrics Test Kit

Concentration: <10 ppm

Range Used:	Range	Method	Concentration ppm
☑	10 to 100 ppm	K-9810	
☑	50 to 500 ppm	K-9815	
☐	100 to 1000 ppm	K-9820	

Analysis Time: 1220

Filtered: ☐

Notes: Colorless @ 55 but No Green

Carbon Dioxide:

Equipment: Chemetrics Test Kit

Concentration: 150 ppm

Range Used:	Range	Method	Concentration ppm
☐	10 to 100 ppm	K-1910	
☑	100 to 1000 ppm	K-1920	150
☐	250 to 2500 ppm	K-1925	

Analysis Time: 1234

Notes:

Ferrous Iron (Fe^{2+}):

Equipment: DR-850 DR-850 Range: 0 - 3.00 mg/L

Program/Module: 500nm 33

Concentration: 9.15 ppm

Analysis Time: 1245

Notes: Dilute 2 3.05 x 3 = 9.15

Filtered: ☐

Hydrogen Sulfide (H_2S): Range: 0 - 5 mg/L

Equipment: HS-C Other:

Exceeded 5.0 mg/L range on color chart: ☐

Concentration: 0.0 ppm

Analysis Time: 1303

Notes:

Note: Analyte, method, and/or equipment may be deleted from form if not being performed.

FIELD ANALYTICAL LOG SHEET
GEOCHEMICAL PARAMETERS

Tetra Tech NUS, Inc.

Project Site Name:	NSWC CRANE	Sample ID No.:	13GWT29ci
Project No.:	9060	Sample Location:	13MWT29
Sampled By:	TK	Duplicate:	☐
Field Analyst:	TK	Blank:	☐

Sulfide (S^{2-}):

Equipment: DR-850 DR-8 50 Range: 0 - 0.70 mg/L Concentration: 0.04 ppm

Program/Module: 610nm 93 Analysis Time: 1315 Filtered: ☐

Notes:

Nitrite (NO_2^--N):

Concentration: 0.000 ppm

Equipment: DR-850 DR-8 50 Range: 0 - 0.350 mg/L Analysis Time: 1225 Filtered: ☐

Program/Module: 62

Standard Solution: ☐ Results: _____ Reagent Blank Correction: ☐

Notes:

Manganese (Mn^{2+}):

Concentration: 1.3 ppm

Equipment: DR-850 DR-8 50 Range: 0 - 20.0 mg/L Analysis Time: 1322 Filtered: ☐

Program/Module: 525nm 41

Notes:

QA/QC Checklist:

All data fields have been completed as necessary: ☑

Correct measurement units are cited in the SAMPLING DATA block: ☑

Values cited in the SAMPLING DATA block are consistent with the Groundwater Sample Log Sheet: ☑

Mulitplication is correct for each *Multiplier* table: ☑

Final calulated concentration is within the appropriate *Range Used* block: ☑

Alkalinity *Relationship* is determined appropriatly as per manufacturer (HACH) instructions: ☑

QA/QC sample (e.g., Std. Additions, etc.) frequency is appropriate as per the project planning documents: ☑

Nitrite Interference treatment was used for Nitrate test if Nitrite was detected: ☐ NA

Title block on ~~each~~ 1ST page of form is initialized by person who performed this QA/QC Checklist: ☑

Tetra Tech NUS, Inc.

GROUNDWATER SAMPLE LOG SHEET

Project Site Name: NSWC CRANE, SWMU13
Project No.: N9060 CTO 0279

[] Domestic Well Data
[X] Monitoring Well Data
[] Other Well Type:
[] QA Sample Type:

Sample ID No.: 13GWT3001
Sample Location: SWMU 13
Sampled By: S. GRIER
C.O.C. No.: 4827
Type of Sample:
[X] Low Concentration
[] High Concentration

SAMPLING DATA:

	Color (Visual)	pH (S. U.)	S.C. (mS/cm)	Temp. (°C)	Turbidity (NTU)	DO (mg/l)	ORP (mV)	Other NA
Date: 11/24/03								
Time: 1615								
Method: Peristoltic pump	Clear	3.34	0.568	9.18	7.0	0.88	396.6	---

PURGE DATA:

	Volume	pH	S.C.	Temp. (C)	Turbidity	DO	Salinity	Other
Date: 11/24/03								
Method: Peristoltic pump								
Monitor Reading (ppm): 0.0								
Well Casing Diameter & Material Type: 2" PVC			See Low Flow Purge Data Sheets					
Total Well Depth (TD): 26.65								
Static Water Level (WL): 12.11								
One Casing Volume(gal/L):								
Start Purge (hrs): 1415								
End Purge (hrs): 1605								
Total Purge Time (min): 110								
Total Vol. Purged (gal/L): 2.0								

SAMPLE COLLECTION INFORMATION:

Analysis	Preservative	Container Requirements	Collected
Explosives SW-846 8330	4°C	(2) L Glass Amber	Yes
Micellaneous Explosives SW-846 8330	4°C	(2) L Glass Amber	Yes
Total Metals SW846 6020/Mercury 7470A	4°C/HNO_3	(1) L HDPE	Yes
Diss. Metals SW846 6020/Mercury 7470A	4°C/HNO_3	(1) L HDPE	No
Nitrate + Nitrite (asN) EPA 353.2 & Ammonia (asN) EPA 350.1	4°C/H_2SO_4	(1) L HDPE	Yes
Total Organic Carbon	4°C/H_3PO_4	(2) 40ml Vails	NO

OBSERVATIONS / NOTES:

Filtered Sample Collected Yes[] No[]

Circle if Applicable:

MS/MSD —

Duplicate ID No.: —

Signature(s): Scott Grier

Tetra Tech NUS, Inc.

LOW FLOW PURGE DATA SHEET

PROJECT : NSWC CRANE
PROJECT NUMBER: N9060
PROJECT SITE NAME: SWMU 13

WELL ID.: 13 MWT 30
DATE: 11/24/03
WEATHER: Cloudy, Snow Flurries, 30°F

Time (Hrs.)	Water Level (Ft. below TOC)	Volume (gal/L)	Flowrate (mL/min)	pH (S.U.)	Cond. (mS/cm)	Turb. (NTU)	DO (mg/L)	Temp. (Celsius)	ORP (mV)	Comments
1415	12.11	0	100	3.26	0.555	33	3.08	8.15	413.2	Clear, No odor
1425	12.65	.20	90	3.22	0.556	29	2.45	7.50	418.9	
1435	13.24	.40	90	3.22	0.560	25	2.16	7.47	420.6	Pumping as
1445	13.60	–	80	3.22	0.564	21	1.96	7.53	421.8	Slow as pump allows.
1455	13.62	.90	80	3.22	0.567	17	1.40	7.67	418.4	
1505	13.68	1.10	80	3.25	0.566	13	1.00	7.89	412.0	
1515	13.70	–	–	3.22	0.554	10	1.06	7.43	409.4	
1525	13.72	–	–	3.29	0.558	8.0	0.99	8.02	403.3	
1535	13.72	1.60	–	3.30	0.558	7.9	0.82	8.13	398.6	
1545	13.73	–	–	3.32	0.564	7.6	0.85	9.08	396.0	
1555	13.73	–	–	3.34	0.567	7.3	0.88	9.20	396.1	
1605	13.73	2.0	–	3.34	0.568	7.0	0.88	9.18	396.6	

Water Quality Meter (S/N) 0280141
Control Box Type (S/N) N/A
Turbidity Meter (S/N) 3106-1402

Pump Intake Depth ~21.65'

SIGNATURE(S): Scott Sin

Tetra Tech NUS, Inc.

GROUNDWATER SAMPLE LOG SHEET

Project Site Name: NSWC CRANE, SWMU13
Project No.: N9060 CTO 0279

[] Domestic Well Data
[X] Monitoring Well Data
[] Other Well Type:
[] QA Sample Type:

Sample ID No.: 13GWT3101
Sample Location: 13GWT31
Sampled By: Goerdt
C.O.C. No.: 4825
Type of Sample:
[X] Low Concentration
[] High Concentration

SAMPLING DATA:

Date: 11-24-03	Color (Visual)	pH (S. U.)	S.C. (mS/cm)	Temp. (°C)	Turbidity (NTU)	DO (mg/l)	ORP (mV)	Other NA
Time: 1118								
Method: Peristaltic	Clear	5.67	0.793	10.09	4.69	5.66	246.7	--

PURGE DATA:

Date: 11-24-03	Volume	pH	S.C.	Temp. (C)	Turbidity	DO	Salinity	Other
Method: Peristaltic								
Monitor Reading (ppm): –								
Well Casing Diameter & Material								
Type: 2" Ø PVC			See Low Flow Purge Data Sheets					
Total Well Depth (TD): 22.50								
Static Water Level (WL): 10.91								
One Casing Volume(gal/L): 7.15								
Start Purge (hrs): 0903								
End Purge (hrs): 1113								
Total Purge Time (min): 130								
Total Vol. Purged (gal/L): 12.7								

SAMPLE COLLECTION INFORMATION:

Analysis	Preservative	Container Requirements	Collected
Explosives SW-846 8330	4°C	(2) L Glass Amber	Yes
Micellaneous Explosives SW-846 8330	4°C	(2) L Glass Amber	Yes
Total Metals SW846 6020/Mercury 7470A	4°C/HNO_3	(1) L HDPE	Yes
Diss. Metals SW846 6020/Mercury 7470A	4°C/HNO_3	(1) L HDPE	No
Nitrate + Nitrite (asN) EPA 353.2 & Ammonia (asN) EPA 350.1	4°C/H_2SO_4	(1) L HDPE	Yes
Total Organic Carbon	4°C/H_3PO_4	(2) 40ml Vails	No

OBSERVATIONS / NOTES:

Filtered Sample Collected Yes[] No[X]

22.50
10.91
11.59 (.163) = 1.89 gal = 7.15 L

Circle if Applicable:

MS/MSD	Duplicate ID No.:
—	—

Signature(s): [signature]

Tetra Tech NUS, Inc.

LOW FLOW PURGE DATA SHEET

PROJECT : NSWC CRANE
PROJECT NUMBER: N9060
PROJECT SITE NAME: SWMU 13

WELL ID.: 13GWT 31
DATE: 11-24-03
WEATHER: Cloudy 30°

Time (Hrs.)	Water Level (Ft. below TOC)	Volume (gal/L)	Flowrate (mL/min)	pH (S.U.)	Cond. (mS/cm)	Turb. (NTU)	DO (mg/L)	Temp. (Celsius)	ORP (mV)	Comments
0903	10.91	—	—	—	—	—	—	—	—	Start purge
0913	12.25	1.3	1300	5.99	0.845	670	4.10	11.75	223.4	Cloudy
0923	12.69	2.5	1200	5.89	0.797	381	6.00	11.13	223.4	"
0933	12.75	3.7	1200	5.88	0.773	363	6.40	10.05	225.2	"
0943	12.81	4.6	900	5.86	0.800	273	6.47	9.74	228.0	"
0953	12.85	5.5	900	5.84	0.824	181	6.52	9.60	231.7	"
1003	12.87	6.4	900	5.82	0.835	132	6.54	9.95	234.7	"
1013	13.00	7.3	900	5.80	0.838	62.9	6.70	9.70	237.9	"
1023	13.05	8.2	900	5.79	0.839	36.7	6.52	10.26	240.1	clearer
1033	13.10	9.1	900	5.76	0.834	25.7	6.40	10.02	243.2	clear
1043	13.15	10.0	900	5.74	0.818	17.4	6.22	9.86	245.3	"
1053	13.19	10.9	900	5.72	0.804	12.4	5.83	10.01	244.7	"
1103	13.23	11.8	900	5.70	0.800	10.71	5.70	10.10	245.2	"
1113	13.35	12.7	900	5.67	0.793	4.69	5.66	10.09	246.7	Stop purge

Water Quality Meter (S/N) 98F0478 AB
Control Box Type (S/N) N/A
Turbidity Meter (S/N) 3317 2402

Pump Intake Depth 17.5'

SIGNATURE(S): [signature]

Tetra Tech NUS, Inc.

GROUNDWATER SAMPLE LOG SHEET

Project Site Name: NSWC CRANE, SWMU13
Project No.: N9060 CTO 0279

[] Domestic Well Data
[X] Monitoring Well Data
[] Other Well Type:
[] QA Sample Type:

Sample ID No.: 13GWT3201
Sample Location: 13GWT32
Sampled By: Goerdt
C.O.C. No.: 4821
Type of Sample:
[X] Low Concentration
[] High Concentration

SAMPLING DATA:

	Color (Visual)	pH (S. U.)	S.C. (mS/cm)	Temp. (°C)	Turbidity (NTU)	DO (mg/l)	ORP (mV)	Other NA
Date: 11-19-~~01~~ 03								
Time: 1543								
Method: Peristaltic	Clear	6.26	0.386	14.73	3.45	8.98	223.6	--

PURGE DATA:

	Volume	pH	S.C.	Temp. (C)	Turbidity	DO	Salinity	Other
Date: 11-19-01								
Method: Peristaltic								
Monitor Reading (ppm): —								
Well Casing Diameter & Material								
Type: 2" Ø PVC			See Low Flow Purge Data Sheets					
Total Well Depth (TD): 20.90								
Static Water Level (WL): 9.91								
One Casing Volume(gal/L): 6.78								
Start Purge (hrs): 1409								
End Purge (hrs): 1539								
Total Purge Time (min): 90								
Total Vol. Purged (gal/L): 8.25								

SAMPLE COLLECTION INFORMATION:

Analysis	Preservative	Container Requirements	Collected
Explosives SW-846 8330	4°C	(2) L Glass Amber	Yes
Micellaneous Explosives SW-846 8330	4°C	(2) L Glass Amber	Yes
Total Metals SW846 6020/Mercury 7470A	4°C/HNO_3	(1) L HDPE	Yes
Diss. Metals SW846 6020/Mercury 7470A	4°C/HNO_3	(1) L HDPE	NO
Nitrate + Nitrite (asN) EPA 353.2 & Ammonia (asN) EPA 350.1	4°C/H_2SO_4	(1) L HDPE	Yes
Total Organic Carbon	4°C/H_3PO_4	(2) 40ml Vails	NO

OBSERVATIONS / NOTES:

Filtered Sample Collected Yes[] No[X]

20.90
9.91
10.99 (.163) = 1.79 gal = 6.78

Circle if Applicable:

MS/MSD — Duplicate ID No.: —

Signature(s): [signature]

Tetra Tech NUS, Inc.

LOW FLOW PURGE DATA SHEET

PROJECT : NSWC CRANE
PROJECT NUMBER: N9060
PROJECT SITE NAME: SWMU 13

WELL ID.: 13GWT3201
DATE: 11-19-03
WEATHER: Sun 60° F

Time (Hrs.)	Water Level (Ft. below TOC)	Volume (gal/L)	Flowrate (mL/min)	pH (S.U.)	Cond. (mS/cm)	Turb. (NTU)	DO (mg/L)	Temp. (Celsius)	ORP (mV)	Comments
1409	9.91	–	–	–	–	–	–	–	–	Start purge
1419	10.49	1.0	1000	6.14	0.271	2.98	7.91	15.08	156.1	Clear
1429	10.59	2.0	1000	6.21	0.341	3.40	7.23	15.03	192.0	"
1439	10.62	3.0	1000	6.23	0.357	2.88	7.63	14.98	209.3	"
1449	10.58	4.0	1000	6.24	0.369	3.83	8.07	14.77	222.4	"
1459	10.54	4.85	850	6.26	0.375	2.88	8.41	14.65	228.7	"
1509	10.54	5.7	850	6.26	0.378	2.67	8.69	14.72	216.0	"
1519	10.53	6.55	850	6.26	0.381	3.08	8.92	14.61	219.3	"
1529	10.54	7.40	850	6.26	0.382	3.31	8.93	14.66	220.5	"
1539	10.52	8.25	850	6.26	0.386	3.45	8.98	14.73	223.6	Stop purge

Water Quality Meter (S/N) 98F0478 AB
Control Box Type (S/N) N/A
Turbidity Meter (S/N) 0920-4298

Pump Intake Depth 15.9'

SIGNATURE(S):

Tetra Tech NUS, Inc.

GROUNDWATER SAMPLE LOG SHEET

Project Site Name: NSWC CRANE, SWMU13
Project No.: N9060 CTO 0279

[] Domestic Well Data
[X] Monitoring Well Data
[] Other Well Type:
[] QA Sample Type:

Sample ID No.: 13GWT3301
Sample Location: 13GWT33
Sampled By: Goerdt
C.O.C. No.: 4827
Type of Sample:
[X] Low Concentration
[] High Concentration

SAMPLING DATA:

Date: 11-24-03	Color (Visual)	pH (S. U.)	S.C. (mS/cm)	Temp. (°C)	Turbidity (NTU)	DO (mg/l)	ORP (mV)	Other NA
Time: 1732								
Method: Peristaltic	Clear							---

PURGE DATA:

Date: 11-24-03	Volume	pH	S.C.	Temp. (C)	Turbidity	DO	Salinity	Other
Method: Peristaltic								
Monitor Reading (ppm): –								
Well Casing Diameter & Material Type: 2" Ø PVC			See Low Flow Purge Data Sheets					
22.5 Total Well Depth (TD): 22.5								
Static Water Level (WL): 14.32								
One Casing Volume(gal/L): 5.06								
Start Purge (hrs): 1330								
End Purge (hrs): 1730								
Total Purge Time (min): 240								
Total Vol. Purged (gal/L): 21.7								

SAMPLE COLLECTION INFORMATION:

Analysis	Preservative	Container Requirements	Collected
Explosives SW-846 8330	4°C	(2) L Glass Amber	Yes 11/24/03
Micellaneous Explosives SW-846 8330	4°C	(2) L Glass Amber	Yes 11/25/03
Total Metals SW846 6020/Mercury 7470A	4°C/HNO_3	(1) L HDPE	Yes 11/25/03
Diss. Metals SW846 6020/Mercury 7470A	4°C/HNO_3	(1) L HDPE	Yes 11/25/03
Nitrate + Nitrite (asN) EPA 353.2 & Ammonia (asN) EPA 350.1	4°C/H_2SO_4	(1) L HDPE	Yes 11/25/03 0845
Total Organic Carbon	4°C/H_3PO_4	(2) 40ml Vails	No

OBSERVATIONS / NOTES:

Filtered Sample Collected Yes[X] No[] Filtered metals sample taken.

22.50
14.32
8.18 (.163) = 1.33 gal = 5.05 L

Stopped sampling after collecting (2) explosive samples due to well drying.

11/25/03 started sampling again at 0845. Turbidity @ 22.8

Circle if Applicable:

MS/MSD	Duplicate ID No.:	Signature(s):
—	—	

Tetra Tech NUS, Inc.

LOW FLOW PURGE DATA SHEET

PROJECT : NSWC CRANE
PROJECT NUMBER: N9060
PROJECT SITE NAME: SWMU 13

WELL ID.: 13GWT3301
DATE: 11-24-03
WEATHER: Cloudy 30°

Time (Hrs.)	Water Level (Ft. below TOC)	Volume (gal/L)	Flowrate (mL/min)	pH (S.U.)	Cond. (mS/cm)	Turb. (NTU)	DO (mg/L)	Temp. (Celsius)	ORP (mV)	Comments
1330	14.32	—	—	—	—	—	—	—	—	Start purge
1340	14.82	1.0	1000	5.45	.096	500	6.29	11.16	221.5	Cloudy
1350	15.29	1.9	900	5.40	.089	700	6.23	11.40	226.8	"
1400	15.82	2.8	900	5.41	.091	900	5.84	11.47	219.7	"
1410	16.29	3.7	900	5.51	.107	>1000	4.97	11.66	166.0	Sat + brown
1420	16.63	4.6	900	5.49	.109	>1000	4.52	11.58	168.3	"
1430	17.35	5.5	900	5.50	.113	>1000	4.07	11.43	169.8	"
1440	17.73	6.4	900	5.50	.119	>1000	3.32	11.48	162.1	"
1450	18.09	7.3	900	5.52	.125	>1000	2.97	11.93	163.0	"
1500	18.41	8.2	900	5.57	.131	>1000	2.75	11.29	151.9	"
1510	18.90	9.1	900	5.61	.139	>1000	2.31	10.82	142.1	"
1520	19.51	10.0	900	5.66	.153	>1000	2.48	10.63	139.3	"
1530	19.31	10.9	900	5.67	.156	>1000	3.54	10.37	134.2	"
1540	20.05	11.8	900	5.69	.173	1100	3.21	10.39	128.3	"
1550	20.48	12.7	900	5.71	.191	1090	2.79	10.42	121.7	"
1600	20.65	13.6	900	5.75	.209	1080	1.38	11.25	111.6	"
1610	20.78	14.5	900	5.81	.234	350	1.73	10.43	104.2	Cloudy
1620	20.79	15.4	900	5.84	.236	160	2.36	9.99	98.5	less cloudy
1630	20.79	16.3	900	5.86	.236	110	2.77	9.60	94.3	"
1640	20.79	17.2	900	5.87	.234	110	3.03	9.29	93.0	"
1650	20.79	18.1	900	5.87	.228	110	3.26	9.19	94.0	"
1700	20.79	19.0	900	5.87	.229	100	3.41	9.12	94.0	Clear

Water Quality Meter (S/N) 98F047848
Control Box Type (S/N) NA
Turbidity Meter (S/N) 3317 2402

Pump Intake Depth 21.5

1' off bottom
Well dries out

SIGNATURE(S):

Tetra Tech NUS, Inc.

LOW FLOW PURGE DATA SHEET

PROJECT : NSWC CRANE
PROJECT NUMBER: N9060
PROJECT SITE NAME: Swmu 13

WELL ID.: 13GWT 3301
DATE: 11-24-03
WEATHER: Cloudy 30°

Time (Hrs.)	Water Level (Ft. below TOC)	Volume (gal/L)	Flowrate (mL/min)	pH (S.U.)	Cond. (mS/cm)	Turb. (NTU)	DO (mg/L)	Temp. (Celsius)	ORP (mV)	Comments
1710	20.79	19.9	900	5.88	.230	98	3.58	9.07	93.6	Clear
1720	20.79	20.8	900	5.88	.231	90	3.63	8.89	92.7	"
1730	20.79	21.7	900	5.88	.234	80	3.75	8.83	91.7	Stop purge

Water Quality Meter (S/N) 98F047848
Control Box Type (S/N) NA
Turbidity Meter (S/N) 3317 2402

Pump Intake Depth ~~20.5'~~ 1' off Bottom

SIGNATURE(S):

PAGE ~~2~~ 3 OF ~~2~~ 3

Tetra Tech NUS, Inc.

GROUNDWATER SAMPLE LOG SHEET

Project Site Name: NSWC CRANE, SWMU13
Project No.: N9060 CTO 0279

[] Domestic Well Data
[X] Monitoring Well Data
[] Other Well Type:
[] QA Sample Type:

Sample ID No.: 13GWT3401
Sample Location: 13MWT34
Sampled By: T. ROJAHN
C.O.C. No.: 4828
Type of Sample:
[X] Low Concentration
[] High Concentration

SAMPLING DATA:

Date: 12/4/03	Color (Visual)	pH (S. U.)	S.C. (mS/cm)	Temp. (°C)	Turbidity (NTU)	DO (mg/l)	ORP (mV)	Other NA
Time: 1150								
Method: SAME	CLEAR	4.97	0.312	10.94	6.07	2.35	+276	—

PURGE DATA:

Date: 12/4/03	Volume	pH	S.C.	Temp. (C)	Turbidity	DO	Salinity	Other
Method: PERISTALTIC								
Monitor Reading (ppm): -								
Well Casing Diameter & Material								
Type: 2" Ø PVC			See Low Flow Purge Data Sheets					
Total Well Depth (TD): 22.90								
Static Water Level (WL): 5.65								
One Casing Volume(gal/L) 10.6								
Start Purge (hrs): 0955								
End Purge (hrs): 1145								
Total Purge Time (min): 110								
Total Vol. Purged (gal/L) 10.5+								

SAMPLE COLLECTION INFORMATION:

Analysis	Preservative	Container Requirements	Collected
Explosives SW-846 8330	4°C	(2) L Glass Amber	Yes
Micellaneous Explosives SW-846 8330	4°C	(2) L Glass Amber	Yes
Total Metals SW846 6020/Mercury 7470A	4°C/HNO_3	(1) L HDPE	Yes
Diss. Metals SW846 6020/Mercury 7470A	4°C/HNO_3	(1) L HDPE	NO
Nitrate + Nitrite (asN) EPA 353.2 & Ammonia (asN) EPA 350.1	4°C/H_2SO_4	(1) L HDPE	Yes
Total Organic Carbon	4°C/H_3PO_4	(2) 40ml Vails	NO

OBSERVATIONS / NOTES:

Filtered Sample Collected Yes[] No[]

22.9 - 5.65 = 17.25 x 0.163 = 2.8 gal or 10.6 L

Circle if Applicable:

MS/MSD	Duplicate ID No.:
—	—

Signature(s): Ty Rojahn

Tetra Tech NUS, Inc.

LOW FLOW PURGE DATA SHEET

PROJECT : NSWC CRANE
PROJECT NUMBER: N9060
PROJECT SITE NAME: SWMU 13

WELL ID.: 13MWT34
DATE: 12/04/03
WEATHER: OVERCAST & 38°F

Time (Hrs.)	Water Level (Ft. below TOC)	Volume (gal/L)	Flowrate (mL/min)	pH (S.U.)	Cond. (mS/cm)	Turb. (NTU)	DO (mg/L)	Temp. (Celsius)	ORP (mV)	Comments
0955	5.65	—	—	—	—	—	—	—	—	Start Purge
1005	6.57	1.200	120	5.15	0.319	51.1	2.09	11.20	+212	V. Sl. Cloudy
1015	6.80	2.400	120	5.10	0.319	51.5	2.20	11.53	+232	" " "
1025	6.71	3.400	100	5.04	0.311	34.7	2.30	10.63	+246	CLEAR
1035	6.63	4.300	90	5.03	0.309	21.1	2.37	10.64	+254	"
1045	6.56	5.100	80	5.02	0.308	18.7	2.23	10.48	+259	"
1055	6.61	6.000	90	5.01	0.311	14.0	2.24	10.90	+264	"
1105	6.65	6.900	90	4.99	0.311	10.91	2.28	10.94	+268	"
1115	6.65	7.800	90	4.98	0.312	9.21	2.26	11.01	+272	"
1125	6.67	8.700	90	4.98	0.312	9.34	2.26	10.96	+273	"
1135	6.68	9.600	90	4.97	0.312	6.79	2.33	10.98	+275	"
1145	6.69	10.500	90	4.97	0.312	6.07	2.35	10.94	+276	"
1150	—	—	—	—	—	—	—	—	—	Start Sampling

Water Quality Meter (S/N) 9981412 AA
Control Box Type (S/N) NA
Turbidity Meter (S/N) 0920 4298

Pump Intake Depth ~18'

SIGNATURE(S): Terry [illegible]

Note: Analyte, method, and/or equipment may be deleted from form if not being performed.

Tetra Tech NUS, Inc.

FIELD ANALYTICAL LOG SHEET
GEOCHEMICAL PARAMETERS

Project Site Name: NSWC CRANE
Project No.: N9060
Sampled By: T. ROJAHN
Field Analyst: T.R.
Field Form Checked as per QA/QC Checklist (initials): TR

Sample ID No.: 13GWT3401
Sample Location: 13MWT34
Duplicate: ☐
Blank: ☐

SAMPLING DATA:

	Color (Visual)	pH (S.U.)	S.C. (mS/cm)	Temp. (°C)	Turbidity (NTU)	DO (mg/l)	Salinity (%)	ORP (Eh) (+/- mv)
Date: 12/4/03								
Time: 1150								
Method: PERISTALTIC	CLEAR	4.97	0.312	10.94	6.07	2.35	—	+276

SAMPLE COLLECTION/ANALYSIS INFORMATION:

ORP (Eh) (+/- mv)

Electrode Make & Model: YSI

Reference Electrode (circle one): Silver-Silver Chloride / Calomel / Hydrogen

Dissolved Oxygen:

Equipment: Chemetrics Test Kit

Concentration: 1 ppm

Range Used:	Range	Method	Concentration ppm
☑	0 to 1 ppm	K-7510	1
☑	1 to 12 ppm	K-7512	1

Analysis Time: 1157

Notes:

Alkalinity:

Equipment: Chemetrics Test Kit

Concentration: <10 ppm

Range Used:	Range	Method	Concentration ppm
☑	10 to 100 ppm	K-9810	<10
☑	50 to 500 ppm	K-9815	—
☐	100 to 1000 ppm	K-9820	

Analysis Time: 1205

Filtered: ☐

Notes: No change from pink

Carbon Dioxide:

Equipment: Chemetrics Test Kit

Concentration: 32 ppm

Range Used:	Range	Method	Concentration ppm
☑	10 to 100 ppm	K-1910	32
☑	100 to 1000 ppm	K-1920	
☐	250 to 2500 ppm	K-1925	

Analysis Time: 1214

Notes:

Ferrous Iron (Fe^{2+}):

Equipment: DR-850 DR-890 Range: 0 - 3.00 mg/L

Program/Module: 500nm 33

Concentration: 0.18 ppm

Analysis Time: 1220

Filtered: ☐

Notes:

Hydrogen Sulfide (H_2S): Range: 0 - 5 mg/L

Equipment: HS-C Other:

Exceeded 5.0 mg/L range on color chart: ☐

Concentration: 0.0 ppm

Analysis Time: 1224

Notes:

Note: Analyte, method, and/or equipment may be deleted from form if not being performed.

FIELD ANALYTICAL LOG SHEET
GEOCHEMICAL PARAMETERS

Tetra Tech NUS, Inc.

Project Site Name:	NSWC CRANE	Sample ID No.:	13GWT3401
Project No.:	N9060	Sample Location:	13MWT34
Sampled By:	TROJAN	Duplicate:	☐
Field Analyst:	TR	Blank:	☐

Sulfide (S^{2-}):

Equipment: DR-850 DR-8 90 Range: 0 - 0.70 mg/L Concentration: 0.00 ppm

Program/Module: 610nm 93 Analysis Time: 1232 Filtered: ☐

Notes:

Nitrite (NO_2^--N):

Concentration: 0.005 ppm

Equipment: DR-850 DR-8 40 Range: 0 - 0.350 mg/L Analysis Time: 12:07 Filtered: ☐

Program/Module: 62

Standard Solution: ☐ Results: _____ Reagent Blank Correction: ☐

Notes:

Manganese (Mn^{2+}):

Concentration: 0.8 ppm

Equipment: DR-850 DR-8 90 Range: 0 - 20.0 mg/L Analysis Time: 1239 Filtered: ☐

Program/Module: 525nm 41

Notes:

QA/QC Checklist:

All data fields have been completed as necessary: ☑

Correct measurement units are cited in the SAMPLING DATA block: ☑

Values cited in the SAMPLING DATA block are consistent with the Groundwater Sample Log Sheet: ☑

Mulitplication is correct for each *Multiplier* table: ☑

Final calulated concentration is within the appropriate *Range Used* block: ☑

Alkalinity *Relationship* is determined appropriatly as per manufacturer (HACH) instructions: ☑

QA/QC sample (e.g., Std. Additions, etc.) frequency is appropriate as per the project planning documents: ☑

Nitrite Interference treatment was used for Nitrate test if Nitrite was detected: ☐ NA

Title block on ~~each~~ 1st page of form is initialized by person who performed this QA/QC Checklist: ☑

Tetra Tech NUS, Inc.

GROUNDWATER SAMPLE LOG SHEET

Project Site Name: NSWC CRANE, SWMU13
Project No.: N9060 CTO 0279

[] Domestic Well Data
[X] Monitoring Well Data
[] Other Well Type:
[] QA Sample Type:

Sample ID No.: 13GWT3501
Sample Location: 13MWT35
Sampled By: JG/TR
C.O.C. No.: 4836
Type of Sample:
[X] Low Concentration
[] High Concentration

SAMPLING DATA:

	Color (Visual)	pH (S. U.)	S.C. (mS/cm)	Temp. (°C)	Turbidity (NTU)	DO (mg/l)	ORP (mV)	Other NA
Date: 12-10-03								
Time: 1145								
Method: Dis. Bailer	GREY	9.08	0.781	13.60	>1000	5.28	105.2	—

PURGE DATA:

	Volume	pH	S.C.	Temp. (C)	Turbidity	DO	Salinity	Other
Date: 12-09-03								
Method: Dis. Bailer								
Monitor Reading (ppm): —								
Well Casing Diameter & Material								
Type: 2" Ø PVC			See Low Flow Purge Data Sheets					
Total Well Depth (TD):								
Static Water Level (WL):								
One Casing Volume(gal/L):								
Start Purge (hrs): 1443								
End Purge (hrs): 1530								
Total Purge Time (min): 47								
Total Vol. Purged (gal/L): 12								

SAMPLE COLLECTION INFORMATION:

Analysis	Preservative	Container Requirements	Collected
Explosives SW-846 8330	4°C	(2) L Glass Amber	Yes
Micellaneous Explosives SW-846 8330	4°C	1 (2) L Glass Amber	Yes
Total Metals SW846 6020/Mercury 7470A	4°C/HNO_3	(1) L HDPE	Yes
Diss. Metals SW846 6020/Mercury 7470A	4°C/HNO_3	(1) L HDPE	Yes — 15
Nitrate + Nitrite (asN) EPA 353.2 & Ammonia (asN) EPA 350.1	4°C/H_2SO_4	(1) L HDPE	Yes
Total Organic Carbon	4°C/H_3PO_4	(2) 40ml Vails	No

OBSERVATIONS / NOTES:

Filtered Sample Collected Yes[X] No[]

Circle if Applicable:

MS/MSD	Duplicate ID No.:	Signature(s):
—	—	Ty Rogal

Tetra Tech NUS, Inc.

LOW FLOW PURGE DATA SHEET

PROJECT : NSWC CRANE
PROJECT NUMBER: N9060
PROJECT SITE NAME: SWMU 13

WELL ID.: 13GWT 35 ~~01~~
DATE: 12-9-03
WEATHER: Cloudy 57° lt. rain

Time (Hrs.)	Water Level (Ft. below TOC)	Volume (gal/L)	Flowrate (mL/min)	pH (S.U.)	Cond. (mS/cm)	Turb. (NTU)	DO (mg/L)	Temp. (Celsius)	ORP (mV)	Comments
1443	64.63	–	–	–	–	–	–	–	–	Start purge
–	–	1.0	–	–	–	–	–	–	–	
–	–	2.0	–	–	–	–	–	–	–	
1500	66.04	3.0	–	9.47	0.711	–	3.39	13.78	81.5	Grey
–	–	4.0	–	–	–	–	–	–	–	
–	–	5.0	–	–	–	–	–	–	–	
1515	67.49	6.0	–	9.41	0.718	>1000	1.68	13.72	88.1	Grey
–	–	7.0	–	–	–	–	–	–	–	
–	–	8.0	–	–	–	–	–	–	–	
1525	–	9.0	–	9.25	0.783	>1000	5.17	13.86	96.3	Grey
1530	DRY	12.0	–	9.08	0.781	>1000	5.28	13.60	105.2	Well dry

Water Quality Meter (S/N) 98F0478 AB
Control Box Type (S/N) NA
Turbidity Meter (S/N) NA

Pump Intake Depth NA

SIGNATURE(S): [signature]

TD 70.20
SWL 64.63
5.57(.163) = .908 gal = 3.4 L

Note: Analyte, method, and/or equipment may be deleted from form if not being performed.

Tetra Tech NUS, Inc.

FIELD ANALYTICAL LOG SHEET
GEOCHEMICAL PARAMETERS

Project Site Name: NSWC CRANE
Project No.: N9060
Sampled By: JG / TK
Field Analyst: JG / TK
Field Form Checked as per QA/QC Checklist (initials): TK

Sample ID No.: 13GWT 3501
Sample Location: 13MWT 35
Duplicate: ☐
Blank: ☐

SAMPLING DATA:

	Color (Visual)	pH (S.U.)	S.C. (mS/cm)	Temp. (°C)	Turbidity (NTU)	DO (mg/l)	Salinity (%)	ORP (Eh) (+/- mv)
Date: 12-09-03								
Time: 1530								
Method: Dis Bailer	Grey	9.08	0.781	13.60	>1000	5.28	—	+105.2

SAMPLE COLLECTION/ANALYSIS INFORMATION:

ORP (Eh) (+/- mv)

Electrode Make & Model: YSI

Reference Electrode (circle one): Silver-Silver Chloride / Calomel / Hydrogen

Dissolved Oxygen:

Equipment: Chemetrics Test Kit

Concentration: 5.5 ppm JG

Analysis Time: 1214

Range Used:	Range	Method	Concentration ppm
☐	0 to 1 ppm	K-7510	
☑	1 to 12 ppm	K-7512	5.5

Notes:

Alkalinity:

Equipment: Chemetrics Test Kit

Concentration: 200 ppm

Analysis Time: 1216

Filtered: ☑

Range Used:	Range	Method	Concentration ppm
☐	10 to 100 ppm	K-9810	
☑	50 to 500 ppm	K-9815	200
☐	100 to 1000 ppm	K-9820	

Notes:

Carbon Dioxide:

Equipment: Chemetrics Test Kit

Concentration: <10 ppm TK

Analysis Time: 1214

Range Used:	Range	Method	Concentration ppm
☑	10 to 100 ppm	K-1910	<10
☑	100 to 1000 ppm	K-1920	—
☐	250 to 2500 ppm	K-1925	

Notes:

Ferrous Iron (Fe^{2+}):

Equipment: DR-850 DR-850 Range: 0 - 3.00 mg/L

Program/Module: 500nm 33

Concentration: 0.02 ppm

Analysis Time: 1225

Filtered: ☑

Notes:

Hydrogen Sulfide (H_2S):

Range: 0 - 5 mg/L

Equipment: HS-C Other:

Exceeded 5.0 mg/L range on color chart: ☐

Concentration: 0.0 ppm

Analysis Time: 1233

Notes:

Note: Analyte, method, and/or equipment may be deleted from form if not being performed.

FIELD ANALYTICAL LOG SHEET
GEOCHEMICAL PARAMETERS

Tetra Tech NUS, Inc.

Project Site Name:	NSWC CRANE	Sample ID No.:	13GWT3501
Project No.:	N9060	Sample Location:	13MWT35
Sampled By:	JG/TK	Duplicate:	☐
Field Analyst:	JG/TK	Blank:	☐

Sulfide (S^{2-}):

Equipment: DR-850 DR-850 Range: 0 - 0.70 mg/L Concentration: 0.01 ppm

Program/Module: 610nm 93 Analysis Time: 1242 Filtered: ☑

Notes:

Nitrite (NO_2^--N):

Concentration: 0.000 ppm

Equipment: DR-850 DR-850 Range: 0 - 0.350 mg/L Analysis Time: 1219 Filtered: ☑

Program/Module: 62

Standard Solution: ☐ Results: _____ Reagent Blank Correction: ☐

Notes:

Manganese (Mn^{2+}):

Concentration: 0.0 ppm

Equipment: DR-850 DR-850 Range: 0 - 20.0 mg/L Analysis Time: 1247 Filtered: ☑

Program/Module: 525nm 41

Notes:

QA/QC Checklist:

All data fields have been completed as necessary: ☑

Correct measurement units are cited in the SAMPLING DATA block: ☑

Values cited in the SAMPLING DATA block are consistent with the Groundwater Sample Log Sheet: ☑

Mulitplication is correct for each *Multiplier* table: ☑

Final calulated concentration is within the appropriate *Range Used* block: ☑

Alkalinity *Relationship* is determined appropriatly as per manufacturer (HACH) instructions: ☑

QA/QC sample (e.g., Std. Additions, etc.) frequency is appropriate as per the project planning documents: ☑

Nitrite Interference treatment was used for Nitrate test if Nitrite was detected: ~~☐~~ NA

Title block on ~~each~~ 1st page of form is initialized by person who performed this QA/QC Checklist: ☑

Tetra Tech NUS, Inc.

GROUNDWATER SAMPLE LOG SHEET

Project Site Name: NSWC CRANE, SWMU13
Project No.: N9060 CTO 0279

[] Domestic Well Data
[X] Monitoring Well Data
[] Other Well Type:
[] QA Sample Type:

Sample ID No.: 13 GW T3601
Sample Location: 13 GW T36
Sampled By: Gorecki
C.O.C. No.: 4834
Type of Sample:
[X] Low Concentration
[] High Concentration

SAMPLING DATA:

	Color (Visual)	pH (S. U.)	S.C. (mS/cm)	Temp. (°C)	Turbidity (NTU)	DO (mg/l)	ORP (mV)	Other NA
Date: 12-8-03								
Time: 1050								
Method: Peristaltic	Clear	5.68	0.721	12.24	9.06	4.91	252.1	--

PURGE DATA:

	Volume L	pH	S.C.	Temp. (C)	Turbidity	DO	Salinity	Other
Date: 12-8-03								
Method: Peristaltic	13.0	5.68	0.721	12.24	9.06	4.91	—	—
Monitor Reading (ppm): —								
Well Casing Diameter & Material								
Type: 2" Ø PVC			See Low Flow Purge Data Sheets					
Total Well Depth (TD): 27.40								
Static Water Level (WL): 19.02								
One Casing Volume(gal/L): 5.17								
Start Purge (hrs): 0840								
End Purge (hrs): 1040								
Total Purge Time (min): 120								
Total Vol. Purged (gal/L): 13.0								

SAMPLE COLLECTION INFORMATION:

Analysis	Preservative	Container Requirements	Collected
Explosives SW-846 8330	4°C	(2) L Glass Amber	Yes
Micellaneous Explosives SW-846 8330	4°C	(2) L Glass Amber	Yes
Total Metals SW846 6020/Mercury 7470A	4°C/HNO_3	(1) L HDPE	Yes
Diss. Metals SW846 6020/Mercury 7470A	4°C/HNO_3	(1) L HDPE	No
Nitrate + Nitrite (asN) EPA 353.2 & Ammonia (asN) EPA 350.1	4°C/H_2SO_4	(1) L HDPE	Yes
Total Organic Carbon	4°C/H_3PO_4	(2) 40ml Vails	No

OBSERVATIONS / NOTES:

Filtered Sample Collected Yes[] No[X]

Pump shut down 1230-1330. Resumed sampling at 1330. Turbidity at 1345 was 1.66.

27.40
19.02
8.38 (.163) = 1.37 gal = 5.17 L

Circle if Applicable:

MS/MSD

Duplicate ID No.: 13GW FD 12080303

Signature(s):

Tetra Tech NUS, Inc.

LOW FLOW PURGE DATA SHEET

PROJECT : NSWC CRANE
PROJECT NUMBER: N9060
PROJECT SITE NAME: SWMU 13

WELL ID.: 13GWT3601
DATE: 12-8-03
WEATHER: P. Cloudy 38° F

Time (Hrs.)	Water Level (Ft. below TOC)	Volume (gal/L)	Flowrate (mL/min)	pH (S.U.)	Cond. (mS/cm)	Turb. (NTU)	DO (mg/L)	Temp. (Celsius)	ORP (mV)	Comments
0840	19.02	1.0	1000	—	—	—	—	—	—	Start purge
0850	19.60	2.0	1000	5.67	0.714	22.4	6.86	11.45	221.9	clear
0900	19.83	3.0	1000	5.70	0.720	21.8	5.75	11.46	230.9	"
0910	20.00	4.0	1000	5.73	0.719	20.1	5.57	11.49	230.7	"
0920	20.01	5.0	1000	5.76	0.717	24.4	5.33	11.52	230.1	"
0930	20.42	6.0	1000	5.76	0.717	24.8	5.24	11.54	232.6	"
0940	20.61	7.0	1000	5.76	0.719	26.8	5.16	11.67	236.3	"
0950	20.73	8.0	1000	5.74	0.720	22.4	5.11	11.78	238.5	"
1000	20.82	9.0	1000	5.72	0.722	20.8	4.96	11.90	240.2	"
1010	20.89	10.0	1000	5.71	0.722	18.5	4.92	11.97	243.3	"
1020	20.97	11.0	1000	5.68	0.722	16.0	4.82	12.08	248.5	"
1030	21.08	12.0	1000	5.68	0.721	10.8	4.83	12.11	251.4	"
1040	21.15	13.0	1000	5.68	0.721	9.06	4.91	12.24	252.1	Stop purge

Water Quality Meter (S/N) 98F0478AB
Control Box Type (S/N) NA
Turbidity Meter (S/N) 3317 2402

Pump Intake Depth 22'

SIGNATURE(S): [signature]

Note: Analyte, method, and/or equipment may be deleted from form if not being performed.

Tetra Tech NUS, Inc.

FIELD ANALYTICAL LOG SHEET
GEOCHEMICAL PARAMETERS

Project Site Name: NSWC CRANE
Project No.: N9060 CTO 279
Sampled By: Goerdt
Field Analyst: Goerdt
Field Form Checked as per QA/QC Checklist (initials): TR

Sample ID No.: 13GWT3601
Sample Location: 13GWT36
Duplicate: ☑ M(TR)
Blank: ☐

SAMPLING DATA:

	Color (Visual)	pH (S.U.)	S.C. (mS/cm)	Temp. (°C)	Turbidity (NTU)	DO (mg/l)	Salinity (%)	ORP (Eh) (+/- mv)
Date: 12-8-03								
Time:								
Method: Peristaltic	Clear	5.68	0.721	12.24	6.06	4.91	—	252.1

SAMPLE COLLECTION/ANALYSIS INFORMATION:

ORP (Eh) (+/- mv)

Electrode Make & Model: YSI

Reference Electrode (circle one): Silver-Silver Chloride / Calomel / Hydrogen

Dissolved Oxygen:

Equipment: Chemetrics Test Kit

Concentration: 5.5/5.5 ppm

Range Used:	Range	Method	Concentration ppm
☐	0 to 1 ppm	K-7510	
☑	1 to 12 ppm	K-7512	5.5 / 5.5

Analysis Time: 1125/1129

Notes:

Alkalinity:

Equipment: Chemetrics Test Kit

Concentration: <10/<10 ppm

Range Used:	Range	Method	Concentration ppm
☑	10 to 100 ppm	K-9810	<10/<10
☐	50 to 500 ppm	K-9815	
☐	100 to 1000 ppm	K-9820	

Analysis Time: 1136/1139

Filtered: ☐

Notes:

Carbon Dioxide:

Equipment: Chemetrics Test Kit

Concentration: 40/40 ppm

Range Used:	Range	Method	Concentration ppm
☑	10 to 100 ppm	K-1910	40/40
☐	100 to 1000 ppm	K-1920	
☐	250 to 2500 ppm	K-1925	

Analysis Time: 1143/1145

Notes:

Ferrous Iron (Fe^{2+}):

Equipment: DR-850 DR-8 __ Range: 0 - 3.00 mg/L

Program/Module: 500nm 33

Concentration: 0.03/0.05 ppm

Analysis Time: 1152/1154

Filtered: ☐

Notes:

Hydrogen Sulfide (H_2S): Range: 0 - 5 mg/L

Equipment: HS-C Other: _____

Exceeded 5.0 mg/L range on color chart: ☐

Concentration: ~~0.01~~ ppm 0.00/0.00

Analysis Time: ~~1212~~/1200 1158/1201

Notes:

Note: Analyte, method, and/or equipment may be deleted from form if not being performed.

FIELD ANALYTICAL LOG SHEET
GEOCHEMICAL PARAMETERS

Tetra Tech NUS, Inc.

Project Site Name:	NSWC CRANE	Sample ID No.:	13GWT3601
Project No.:	N9060 CTO 279	Sample Location:	13GWT36
Sampled By:	Goerdt	Duplicate:	☑ M (T2)
Field Analyst:	Goerdt	Blank:	☐

Sulfide (S^{2-}):

Equipment: DR-850 DR-8 __ Range: 0 - 0.70 mg/L Concentration: 0.01/0.01 ppm

Program/Module: 610nm 93 Analysis Time: 1212/1214 Filtered: ☐

Notes:

Nitrite (NO_2^--N):

Concentration: 0.003/.000 ppm

Equipment: DR-850 DR-8 __ Range: 0 - 0.350 mg/L Analysis Time: 1117/1119 Filtered: ☐

Program/Module: 62

Standard Solution: ☐ Results: 0.003/ Reagent Blank Correction: ☐

Notes:

Manganese (Mn^{2+}):

Concentration: 0.3/0.2 ppm

Equipment: DR-850 DR-8 __ Range: 0 - 20.0 mg/L Analysis Time: 1221/1225 Filtered: ☐

Program/Module: 525nm 41

Notes:

QA/QC Checklist:

All data fields have been completed as necessary: ☑

Correct measurement units are cited in the SAMPLING DATA block: ☑

Values cited in the SAMPLING DATA block are consistent with the Groundwater Sample Log Sheet: ☑

Mulitplication is correct for each *Multiplier* table: ☑

Final calulated concentration is within the appropriate *Range Used* block: ☑

Alkalinity *Relationship* is determined appropriatly as per manufacturer (HACH) instructions: ☑

QA/QC sample (e.g., Std. Additions, etc.) frequency is appropriate as per the project planning documents: ☑

Nitrite Interference treatment was used for Nitrate test if Nitrite was detected: ☐ NA

Title block on ~~each~~ 1st page of form is initialized by person who performed this QA/QC Checklist: ☑

Tetra Tech NUS, Inc.

GROUNDWATER SAMPLE LOG SHEET

Project Site Name: NSWC CRANE, SWMU13
Project No.: N9060 CTO 0279

[] Domestic Well Data
[X] Monitoring Well Data
[] Other Well Type:
[] QA Sample Type:

Sample ID No.: 13FWT3701
Sample Location: 13MWT37
Sampled By: FCW
C.O.C. No.: 4817
Type of Sample:
[X] Low Concentration
[] High Concentration

SAMPLING DATA:

	Color (Visual)	pH (S. U.)	S.C. (mS/cm)	Temp. (°C)	Turbidity (NTU)	DO (mg/l)	ORP (mV)	Other NA
Date: 11-6-03								
Time: 1550								
Method: PERISTALTIC	CLEAR	5.75	0.307	13.32	3.2	4.82	-144.9	--

PURGE DATA:

	Volume	pH	S.C.	Temp. (C)	Turbidity	DO	Salinity	Other
Date: 11-6-03								
Method: PERISTALTIC								
Monitor Reading (ppm): –								
Well Casing Diameter & Material Type: 2" PVC								
			See Low Flow Purge Data Sheets					
Total Well Depth (TD): 27.15								
Static Water Level (WL): 14.29								
One Casing Volume(gal/L): 2.1								
Start Purge (hrs): 1400								
End Purge (hrs): 1550								
Total Purge Time (min): 110								
Total Vol. Purged (gal/L): 2.3								

SAMPLE COLLECTION INFORMATION:

Analysis	Preservative	Container Requirements	Collected
Explosives SW-846 8330	4°C	(2) L Glass Amber	Yes
Micellaneous Explosives SW-846 8330	4°C	(2) L Glass Amber	Yes
Total Metals SW846 6020/Mercury 7470A	4°C/HNO_3	(1) L HDPE	Yes
Diss. Metals SW846 6020/Mercury 7470A	4°C/HNO_3	(1) L HDPE	—
Nitrate + Nitrite (asN) EPA 353.2 & Ammonia (asN) EPA 350.1	4°C/H_2SO_4	(1) L HDPE	Yes
Total Organic Carbon	4°C/H_3PO_4	(2) 40ml Vails	—

OBSERVATIONS / NOTES:

Filtered Sample Collected Yes[] No[X]
Intake w/o screen

Circle if Applicable:

MS/MSD	Duplicate ID No.:	Signature(s):
—	—	FCW

Tetra Tech NUS, Inc.

LOW FLOW PURGE DATA SHEET

PROJECT SITE NAME: NSWC CRANE
PROJECT NUMBER: N9060, CTO 0279

WELL ID.: 13MWT37
DATE: 11-6-03

Time (Hrs.)	Water Level (Ft. below TOC)	Flow (mL/Min.)	pH (S.U.)	Cond. (mS/cm)	Turb. (NTU)	DO (mg/L)	Temp. (Celsius)	Salinity (%)	ORP (mV)	Comments (Volume & Color)
1400	14.29									START
1410	14.63	80	5.96	0.351	29.5	4.70	13.35	–	-217.3	
1420	14.79		5.87	0.349	18.8	4.59	13.19	–	-195.6	
1430	14.89		5.82	0.333	11.9	4.70	13.24	–	-177.3	
1440	14.97		5.80	0.327	9.2	4.74	13.25	–	-169.2	
1450	15.02		5.79	0.317	6.7	4.72	13.27	–	-165.6	
1500	15.07		5.77	0.316	6.22	4.76	13.46	–	-159.7	
1510	15.10		5.77	0.311	5.9	4.78	13.41	–	-156.0	
1520	15.07		5.75	0.304	3.8	4.87	13.21	–	-148.3	
1530	15.07		5.75	0.308	3.7	4.80	13.30	–	-147.3	
1540	15.10		5.75	0.308	3.2	4.81	13.36	–	-144.7	
1550	15.10		5.75	0.307	3.2	4.82	13.30	–	-144.9	SAMPLE
1705										END

SIGNATURE(S): [illegible]

Tetra Tech NUS, Inc.

GROUNDWATER SAMPLE LOG SHEET

Project Site Name: NSWC CRANE, SWMU13
Project No.: N9060 CTO 0279

[] Domestic Well Data
[X] Monitoring Well Data
[] Other Well Type:
[] QA Sample Type:

Sample ID No.: 13GWT3801
Sample Location: 13MWT38
Sampled By: FCW
C.O.C. No.: 4818
Type of Sample:
[X] Low Concentration
[] High Concentration

SAMPLING DATA:

Date: 11-10-03	Color (Visual)	pH (S. U.)	S.C. (mS/cm)	Temp. (°C)	Turbidity (NTU)	DO (mg/l)	ORP (mV)	Other NA
Time: 0915								
Method: BLADDER	GREY	11.39	0.332	13.18	>999	4.70	10.3	—

PURGE DATA:

Date: 11-9-03	Volume	pH	S.C.	Temp. (C)	Turbidity	DO	Salinity	Other
Method: BLADDER								
Monitor Reading (ppm): —								
Well Casing Diameter & Material								
Type: 2" PVC			See Low Flow Purge Data Sheets					
Total Well Depth (TD): 67.7								
Static Water Level (WL): 62.26								
One Casing Volume(gal/L) ~~67.7~~ 0.86								
Start Purge (hrs): 1005								
End Purge (hrs): 1213								
Total Purge Time (min): 128								
Total Vol. Purged (gal/L): 2.4								

SAMPLE COLLECTION INFORMATION:

Analysis	Preservative	Container Requirements	Collected
Explosives SW-846 8330	4°C	(2) L Glass Amber	Yes
Micellaneous Explosives SW-846 8330	4°C	(2) L Glass Amber	Yes
Total Metals SW846 6020/Mercury 7470A	4°C/HNO_3	(1) L HDPE	Yes
Diss. Metals SW846 6020/Mercury 7470A	4°C/HNO_3	(1) L HDPE	✓ -F
Nitrate + Nitrite (asN) EPA 353.2 & Ammonia (asN) EPA 350.1	4°C/H_2SO_4	(1) L HDPE	Yes
Total Organic Carbon	4°C/H_3PO_4	(2) 40ml Vails	—

OBSERVATIONS / NOTES:

Filtered Sample Collected Yes[X] No[]

WL = 6.25 on 11-10-03
Low yield well intake a little off bottom

Circle if Applicable:

MS/MSD	Duplicate ID No.:	Signature(s):
—	—	[signature]

Tetra Tech NUS, Inc.

LOW FLOW PURGE DATA SHEET

PROJECT SITE NAME: NSWC CRANE
PROJECT NUMBER: N9060, CTO 0279

WELL ID.: 13MWT38
DATE: 11-9-03

Time (Hrs.)	Water Level (Ft. below TOC)	Flow (mL/Min.)	pH (S.U.)	Cond. (mS/cm)	Turb. (NTU)	DO (mg/L)	Temp. (Celsius)	Salinity (%)	ORP (mV)	Comments (Volume & Color)
1005	62.26									START
1015	62.72	70	11.59	0.302	999	6.44	8.97	–	26.0	
1025	63.03		11.57	0.316	999	4.45	10.56	–	13.8	
1035	63.36		11.55	0.325	999	4.09	11.42	–	6.7	-CLEAN OUT CELL
1045	63.84		11.52	0.330	999	4.23	11.72	–	5.0	
1055	64.29		11.53	0.327	999	4.46	11.49	–	8.2	
1105	64.74		11.53	0.328	999	6.27	11.56	–	11.8	
1115	65.13		11.52	0.327	999	6.95	11.49	–	10.7	-CLEAN OUT CELL
1125	65.57		11.44	0.315	999	7.95	11.48	–	23.8	
1135	65.90		11.39	0.316	999	7.36	12.04	–	14.6	
1145	66.30		11.35	0.315	999	6.78	12.40	–	11.3	
1155	>66.40 *		11.37	0.320	999	5.90	12.55	–	10.3	* WATER LEVEL BELOW
1205	–		11.39	0.332	999	4.70	13.18	–	10.3	PUMP
1208	DRY									
0915	6.25									SAMPLE - 11-10-03
										70 PSI
										CPM-2 20, 10

SIGNATURE(S): [illegible]

PAGE 2 OF 2

Note: Analyte, method, and/or equipment may be deleted from form if not being performed.

Tetra Tech NUS, Inc.

FIELD ANALYTICAL LOG SHEET
GEOCHEMICAL PARAMETERS

Project Site Name: NSWC CRANE
Project No.: N9060
Sampled By: F.W
Field Analyst: T. Rosahn / FW
Field Form Checked as per QA/QC Checklist (initials): TR

Sample ID No.: 13GWT38D1
Sample Location: 13MWT38
Duplicate: ☐
Blank: ☐

SAMPLING DATA:

	Color (Visual)	pH (S.U.)	S.C. (mS/cm)	Temp. (°C)	Turbidity (NTU)	DO (mg/l)	Salinity (%)	ORP (Eh) (+/- mv)
Date: 11-10-03								
Time: 0915								
Method: BLADDER	Grey	11.39	0.332	13.18	7999	4.70	–	+10.3

SAMPLE COLLECTION/ANALYSIS INFORMATION:

ORP (Eh) (+/- mv)

Electrode Make & Model: YSI

Reference Electrode (circle one): Silver-Silver Chloride / Calomel / Hydrogen

Dissolved Oxygen:

Equipment: Chemetrics Test Kit

Concentration: 3.5 ppm TR

Range Used:	Range	Method	Concentration ppm
☑	0 to 1 ppm	K-7510	
☑	1 to 12 ppm	K-7512	3.5

Analysis Time: 0824

Notes:

Alkalinity:

Equipment: Chemetrics Test Kit

Concentration: 108 ppm FW

Range Used:	Range	Method	Concentration ppm
☐	10 to 100 ppm	K-9810	
☐	50 to 500 ppm	K-9815	
☑	100 to 1000 ppm	K-9820	108

Analysis Time: 0846

Filtered: ☑

Notes: pH was high

Carbon Dioxide:

Equipment: Chemetrics Test Kit

Concentration: <10 ppm FW

Range Used:	Range	Method	Concentration ppm
☑	10 to 100 ppm	K-1910	<10
☑	100 to 1000 ppm	K-1920	
☐	250 to 2500 ppm	K-1925	

Analysis Time: 0832

Notes: Sample turned Pink w/ Activator solution

Ferrous Iron (Fe^{2+}):

Equipment: DR-850 DR-890 Range: 0 - 3.00 mg/L
Program/Module: 500nm 33

Concentration: 0.00 ppm

Analysis Time: 0851

Notes:

Filtered: ☐

Hydrogen Sulfide (H_2S): Range: 0 - 5 mg/L

Equipment: HS-C Other:

Exceeded 5.0 mg/L range on color chart: ☐

Concentration: 0.0 ppm FW

Analysis Time: 0950

Notes:

Note: Analyte, method, and/or equipment may be deleted from form if not being performed.

FIELD ANALYTICAL LOG SHEET
GEOCHEMICAL PARAMETERS

Tetra Tech NUS, Inc.

Project Site Name:	NSWC CRANE	Sample ID No.:	13GWT3801
Project No.:	9060	Sample Location:	13MWT38
Sampled By:	F. W.	Duplicate:	☐
Field Analyst:	T. ROSAHN / FW	Blank:	☐

Sulfide (S^{2-}):

Equipment: DR-850 DR-8 90 Range: 0 - 0.70 mg/L Concentration: 0.00 ppm

Program/Module: 610nm 93 Analysis Time: 0859 Filtered: ☑

Notes:

Nitrite (NO_2^--N):

Concentration: 0.000 ppm

Equipment: DR-850 DR-8 58 Range: 0 - 0.350 mg/L Analysis Time: 0958 Filtered: ☑

Program/Module: 62

Standard Solution: ☐ Results: _____ Reagent Blank Correction: ☐

Notes:

Manganese (Mn^{2+}):

Concentration: 0.1 ppm

Equipment: DR-850 DR-8 54 Range: 0 - 20.0 mg/L Analysis Time: 0908 Filtered: ☑

Program/Module: 525nm 41

Notes:

QA/QC Checklist:

All data fields have been completed as necessary: ☑

Correct measurement units are cited in the SAMPLING DATA block: ☑

Values cited in the SAMPLING DATA block are consistent with the Groundwater Sample Log Sheet: ☑

Mulitplication is correct for each *Multiplier* table: ☑

Final calulated concentration is within the appropriate *Range Used* block: ☑

Alkalinity *Relationship* is determined appropriatly as per manufacturer (HACH) instructions: ☑

QA/QC sample (e.g., Std. Additions, etc.) frequency is appropriate as per the project planning documents: ☑

Nitrite Interference treatment was used for Nitrate test if Nitrite was detected: ☐ NA

Title block on ~~each~~ 1st page of form is initialized by person who performed this QA/QC Checklist: ☑

Tetra Tech NUS, Inc.

GROUNDWATER SAMPLE LOG SHEET

Project Site Name: NSWC CRANE, SWMU13
Project No.: N9060 CTO 0279

[] Domestic Well Data
[X] Monitoring Well Data
[] Other Well Type:
[] QA Sample Type:

Sample ID No.: 13GWT3901
Sample Location: 13MWT39
Sampled By: FCW
C.O.C. No.: 8817
Type of Sample:
[X] Low Concentration
[] High Concentration

SAMPLING DATA:

Date: 11-7-03	Color (Visual)	pH (S. U.)	S.C. (mS/cm)	Temp. (°C)	Turbidity (NTU)	DO (mg/l)	ORP (mV)	Other NA
Time: 1400								
Method: PERISTALTIC	CLEAR	6.40	0.391	13.29	17.9	5.35	135.1	---

PURGE DATA:

Date: 11-7-03	Volume	pH	S.C.	Temp. (C)	Turbidity	DO	Salinity	Other
Method: PERISTALTIC								
Monitor Reading (ppm): —								
Well Casing Diameter & Material								
Type: 2" PVC			See Low Flow Purge Data Sheets					
Total Well Depth (TD): 26.7								
Static Water Level (WL): 17.03								
One Casing Volume(~~gal~~/L): 1.6								
Start Purge (hrs): 0913								
End Purge (hrs): 1400								
Total Purge Time (min): 240								
Total Vol. Purged (~~gal~~/L): 5.1								

SAMPLE COLLECTION INFORMATION:

Analysis	Preservative	Container Requirements	Collected
Explosives SW-846 8330	4°C	(2) L Glass Amber	Yes
Micellaneous Explosives SW-846 8330	4°C	(2) L Glass Amber	Yes
Total Metals SW846 6020/Mercury 7470A	4°C/HNO_3	(1) L HDPE	Yes
Diss. Metals SW846 6020/Mercury 7470A	4°C/HNO_3	(1) L HDPE	✓
Nitrate + Nitrite (asN) EPA 353.2 & Ammonia (asN) EPA 350.1	4°C/H_2SO_4	(1) L HDPE	Yes
Total Organic Carbon	4°C/H_3PO_4	(2) 40ml Vails	—

OBSERVATIONS / NOTES:

Filtered Sample Collected Yes[X] No[]
INTAKE @ MID SCREEN

Circle if Applicable:

MS/MSD	Duplicate ID No.:
—	—

Signature(s):

Tetra Tech NUS, Inc.

LOW FLOW PURGE DATA SHEET

PROJECT SITE NAME: NSWC CRANE
PROJECT NUMBER: N9060, CTO 0279

WELL ID.: 13MWT39
DATE: 11-7-03

Time (Hrs.)	Water Level (Ft. below TOC)	Flow (mL/Min.)	pH (S.U.)	Cond. (mS/cm)	Turb. (NTU)	DO (mg/L)	Temp. (Celsius)	Salinity (%)	ORP (mV)	Comments (Volume & Color)
0913	17.03									START
0923	17.32	95	6.50	0.370	28.3	5.18	11.61	–	174.0	
0933	17.64	↓	6.54	0.383	28.1	3.38	12.61	–	148.6	
0943	17.93	↓	6.43	0.387	52.3	2.47	12.95	–	144.9	
0953	18.07	80	6.42	0.387	69.8	2.35	12.42	–	142.8	
0993	18.21		6.41	0.374	86.5	2.53	12.09	–	138.4	
1013	18.32		6.41	0.375	68.3	2.62	12.24	–	134.6	
1023	18.41		6.41	0.379	57.4	2.84	12.49		133.9	
1033	18.53		6.42	0.382	45.7	3.11	12.56	–	132.3	
1043	18.64		6.42	0.384	38.4	3.33	12.76	–	132.0	
1053	18.72		6.41	0.384	43.1	3.50	12.66	–	131.7	
1103	18.82		6.41	0.388	42.0	3.58	13.19	–	132.0	
1113	18.90		6.40	0.388	42.2	3.67	13.12	–	132.2	
1123	18.96		6.39	0.387	35.6	3.90	12.97	–	131.9	
1133	19.04		6.38	0.386	36.4	3.91	13.03	–	130.5	
1143	19.11		6.37	0.387	34.5	3.97	13.33	–	130.8	
1153	19.17		6.37	0.390	32.3	4.18	13.59	–	131.9	
1203	19.23		6.37	0.389	35.1	4.31	13.65	–	133.5	
1212	19.29	↓	6.36	0.387	30.0	4.37	13.58		133.2	STOP
1300	18.36		6.38	0.382	22.9	5.02	13.21	–	131.5	START REPURGING
1310	↓	90	↓	↓	↓	↓	↓	–	↓	
1320	18.56		6.41	0.386	14.0	5.37	13.27	–	132.9	
1330	18.71		6.41	0.388	19.9	5.50	13.27	–	134.5	
1340	18.83		6.41	0.390	23.2	5.44	13.36	–	135.7	
1350	18.94		6.41	0.392	22.5	5.40	13.34	–	135.4	
1400	19.02	↓	6.40	0.391	17.9	5.35	13.29	–	135.1	SAMPLE
1535										END

SIGNATURE(S): [illegible]

Tetra Tech NUS, Inc.

GROUNDWATER SAMPLE LOG SHEET

Project Site Name: NSWC CRANE, SWMU13
Project No.: N9060 CTO 0279

[] Domestic Well Data
[X] Monitoring Well Data
[] Other Well Type:
[] QA Sample Type:

Sample ID No.: 13GWT4001
Sample Location: 13MWT40
Sampled By: FCW
C.O.C. No.: 4816
Type of Sample:
[X] Low Concentration
[] High Concentration

SAMPLING DATA:

Date: 11-5-03	Color (Visual)	pH (S. U.)	S.C. (mS/cm)	Temp. (°C)	Turbidity (NTU)	DO (mg/l)	ORP (mV)	Other NA
Time: 1630								
Method: PERISTALTIC	CLEAR	5.53	0.273	13.28	6.2	6.28	100.3	--

PURGE DATA:

Date: 11-5-03	Volume	pH	S.C.	Temp. (C)	Turbidity	DO	Salinity	Other
Method: PERISTALTIC								
Monitor Reading (ppm): -								
Well Casing Diameter & Material Type: 2" PVC			See Low Flow Purge Data Sheets					
Total Well Depth (TD): 27.70								
Static Water Level (WL): 18.37								
One Casing Volume(gal/L): 1.5								
Start Purge (hrs): 1455								
End Purge (hrs): 1630								
Total Purge Time (min): 95								
Total Vol. Purged (gal/L): 2.2								

SAMPLE COLLECTION INFORMATION:

Analysis	Preservative	Container Requirements	Collected
Explosives SW-846 8330	4°C	(2) L Glass Amber	Yes
Micellaneous Explosives SW-846 8330	4°C	(2) L Glass Amber	Yes
Total Metals SW846 6020/Mercury 7470A	4°C/HNO_3	(1) L HDPE	Yes
Diss. Metals SW846 6020/Mercury 7470A	4°C/HNO_3	(1) L HDPE	—
Nitrate + Nitrite (asN) EPA 353.2 & Ammonia (asN) EPA 350.1	4°C/H_2SO_4	(1) L HDPE	Yes
Total Organic Carbon	4°C/H_3PO_4	(2) 40ml Vails	—

OBSERVATIONS / NOTES:

Filtered Sample Collected Yes[] No[X]
INTAKE MID SCREEN

Circle if Applicable:

MS/MSD	Duplicate ID No.:
—	

Signature(s): FCW

Tetra Tech NUS, Inc.

LOW FLOW PURGE DATA SHEET

PROJECT SITE NAME: NSWC CRANE
PROJECT NUMBER: N9060, CTO 0279

WELL ID.: 13MWT40
DATE: 11-5-03

Time (Hrs.)	Water Level (Ft. below TOC)	Flow (mL/Min.)	pH (S.U.)	Cond. (mS/cm)	Turb. (NTU)	DO (mg/L)	Temp. (Celsius)	Salinity (%)	ORP (mV)	Comments (Volume & Color)
1455	18.37									START
1505	18.61	100	5.60	0.273	83	7.22	13.52	–	102.5	
1515	18.65	↓	5.60	0.272	39	7.01	13.55	–	82.1	
1525	18.69	90	5.56	0.269	27.7	6.64	13.44	–	76.0	
1535	18.70		5.53	0.270	24	6.45	13.41	–	79.3	
1545	18.72		5.53	0.271	18.4	6.36	13.41	–	84.5	
1555	18.70		5.54	0.271	15.4	6.23	13.27	–	91.6	
1605	18.70		5.54	0.272	13.3	6.25	13.23	–	91.7	
1615	18.70		5.54	0.272	10.6	6.24	13.28	–	91.9	
1625	18.70		5.54	0.272	7.1	6.26	13.31	–	95.1	
1630	18.71		5.53	0.273	6.2	6.28	13.28	–	100.3	SAMPLE
1750										END

SIGNATURE(S): [illegible]

Tetra Tech NUS, Inc.

GROUNDWATER SAMPLE LOG SHEET

Project Site Name: NSWC CRANE, SWMU13
Project No.: N9060 CTO 0279

[] Domestic Well Data
[X] Monitoring Well Data
[] Other Well Type:
[] QA Sample Type:

Sample ID No.: 13GWT4101
Sample Location: 13MWT41
Sampled By: T. Rosahn
C.O.C. No.: 4825
Type of Sample:
[X] Low Concentration
[] High Concentration

SAMPLING DATA:

	Color (Visual)	pH (S. U.)	S.C. (mS/cm)	Temp. (°C)	Turbidity (NTU)	DO (mg/l)	ORP (mV)	Other NA
Date: 11-23-03								
Time: 1530								
Method: Dis. Bailer	Greyish	8.36	0.394	14.01	>1000	3.72	+170	—

PURGE DATA:

	Volume	pH	S.C.	Temp. (C)	Turbidity	DO	Salinity	Other ORP
Date: 11-23-03								
Method: Bailer	INT	8.48	0.430	15.89	>1000	1.71	~~>1000~~ (2%)	163
Monitor Reading (ppm): 23	1	8.36	0.394	14.01	>1000	3.72	—	170
Well Casing Diameter & Material								
Type: 2" PVC		See Low Flow Purge Data Sheets						
Total Well Depth (TD): 67.8								
Static Water Level (WL): 66.29								
One Casing Volume(gal/L):								
Start Purge (hrs): 1025								
End Purge (hrs): 1030								
Total Purge Time (min): 5								
Total Vol. Purged (gal/L): 1.5								

SAMPLE COLLECTION INFORMATION:

Analysis	Preservative	Container Requirements	Collected
Explosives SW-846 8330	4°C	11/23 2 (2) L Glass Amber @ 1530	Yes
Micellaneous Explosives SW-846 8330	4°C	11/24 1 (2) L Glass Amber @ 1000	Yes
Total Metals SW846 6020/Mercury 7470A	4°C/HNO_3	11/24 (1) L HDPE @ 1000	Yes
Diss. Metals SW846 6020/Mercury 7470A	4°C/HNO_3	11/24 (1) L HDPE @ 1000	YES -F
Nitrate + Nitrite (asN) EPA 353.2 & Ammonia (asN) EPA 350.1	4°C/H_2SO_4	11/24 (1) L HDPE @ 1000	Yes
Total Organic Carbon	4°C/H_3PO_4	(2) 40ml Vails	NO

OBSERVATIONS / NOTES:

Filtered Sample Collected Yes[X] No[]

VERY LOW YIELDING WELL

Circle if Applicable:

MS/MSD	Duplicate ID No.:
—	—

Signature(s): T. Rosahn

Tetra Tech NUS, Inc.

GROUNDWATER SAMPLE LOG SHEET

Project Site Name: NSWC CRANE, SWMU13
Project No.: N9060 CTO 0279

[] Domestic Well Data
[X] Monitoring Well Data
[] Other Well Type:
[] QA Sample Type:

Sample ID No.: 13GWT4201
Sample Location: 13MWT42
Sampled By: T. ROJAHN
C.O.C. No.: 48168 & 4817
Type of Sample:
[X] Low Concentration
[] High Concentration

SAMPLING DATA:

	Color (Visual)	pH (S. U.)	S.C. (mS/cm)	Temp. (°C)	Turbidity (NTU)	DO (mg/l)	ORP (mV)	Other NA
Date: 11/6/03								
Time: 1500								
Method: SAME	Tannish	6.39	0.190	14.03	71000	1.46	105	---

PURGE DATA:

	Volume	pH	S.C.	Temp. (C)	Turbidity	DO	Salinity	Other
Date: 11-05-03								
Method: Peristaltic								
Monitor Reading (ppm): -								
Well Casing Diameter & Material								
Type: 2" Ø PVC			See Low Flow Purge Data Sheets					
Total Well Depth (TD): 23.45								
Static Water Level (WL): 20.80								
One Casing Volume(gal/L): 1.6								
Start Purge (hrs): 1535								
End Purge (hrs): 1614								
Total Purge Time (min): 39								
Total Vol. Purged (gal/L): 3								

SAMPLE COLLECTION INFORMATION:

Analysis	Preservative	Container Requirements	Collected
Explosives SW-846 8330	4°C	11/6/03 | ~~(2)~~ L Glass Amber	Yes
Micellaneous Explosives SW-846 8330	4°C	11/6/03 | ~~(2)~~ L Glass Amber	Yes
Total Metals SW846 6020/Mercury 7470A	4°C/HNO_3	11/7/03 (1) L HDPE	Yes
Diss. Metals SW846 6020/Mercury 7470A	4°C/HNO_3	11/7/03 (1) L HDPE	YES -F
Nitrate + Nitrite (asN) EPA 353.2 & Ammonia (asN) EPA 350.1	4°C/H_2SO_4	11/6/03 (1) L HDPE	Yes
Total Organic Carbon	4°C/H_3PO_4	(2) 40ml Vails	NO

OBSERVATIONS / NOTES:

Filtered Sample Collected Yes[] No[]

SLOW RECHARGE
23.45 - 20.80 = 2.65 x 0.163 = 0.43 gal or 1.6 L
INTAKE NEAR BOTTOM OF WELL

Circle if Applicable:

MS/MSD	Duplicate ID No.:
—	—

Signature(s): [signature]

Tetra Tech NUS, Inc.

LOW FLOW PURGE DATA SHEET

PROJECT SITE NAME: NSWC CRANE
PROJECT NUMBER: N9060, CTO 0279

WELL ID.: 13MWT42
DATE: 11-05-03

Time (Hrs.)	Water Level (Ft. below TOC)	Flow (mL/Min.)	pH (S.U.)	Cond. (mS/cm)	Turb. (NTU)	DO (mg/L)	Temp. (Celsius)	Salinity (%)	ORP (mV)	Comments (Volume & Color)
1535	20.80	—	—	—	—	—	—	NA	T	GREY
1545	21.65	100	6.46	0.185	>1000	3.41	14.03	NA	115	1000ml BRN
1555	22.11	100	6.38	0.188	>1000	1.79	13.93	NA	115	2000ml TAN
1605	22.75	100	6.39	0.190	>1000	1.46	14.03	NA	105	3000ml TAN
1614	23.45	—	—	—	—	—	—	—	—	DRY
1626	23.30	—	—	—	—	—	—	—	—	RECHARGE
1636	22.77	—	—	—	—	—	—	—	—	"
1646	22.50	—	—	—	—	—	—	—	—	"
—	—	—	—	—	—	—	—	—	—	WI II Sample 11/6

SIGNATURE(S): [illegible]

Tetra Tech NUS, Inc.

GROUNDWATER SAMPLE LOG SHEET

Project Site Name: NSWC CRANE, SWMU13
Project No.: N9060 CTO 0279

[] Domestic Well Data
[X] Monitoring Well Data
[] Other Well Type:
[] QA Sample Type:

Sample ID No.: 13GWT4301
Sample Location: 13 MWT43
Sampled By: S GRIER
C.O.C. No.: 4828
Type of Sample:
[X] Low Concentration
[] High Concentration

SAMPLING DATA:

Date: 12/4/03	Color	pH	S.C.	Temp.	Turbidity	DO	ORP	Other
Time: 1050	(Visual)	(S. U.)	(mS/cm)	(°C)	(NTU)	(mg/l)	(mV)	NA
Method: Peristoltic	Clear	4.47	0.303	12.83	1.9	4.37	298.5	--

PURGE DATA:

Date: 12/4/03	Volume	pH	S.C.	Temp. (C)	Turbidity	DO	Salinity	Other
Method: Peristoltic pump								
Monitor Reading (ppm): 0.0								
Well Casing Diameter & Material								
Type: 2" PVC			See Low Flow Purge Data Sheets					
Total Well Depth (TD): 22.50								
Static Water Level (WL): 9.20								
One Casing Volume (gal/L): 2.17								
Start Purge (hrs): 0900								
End Purge (hrs): 1040								
Total Purge Time (min): 100								
Total Vol. Purged (gal/L): 3.0								

SAMPLE COLLECTION INFORMATION:

Analysis	Preservative	Container Requirements	Collected
Explosives SW-846 8330	4°C	(2) L Glass Amber	Yes
Micellaneous Explosives SW-846 8330	4°C	(2) L Glass Amber	Yes
Total Metals SW846 6020/Mercury 7470A	4°C/HNO_3	(1) L HDPE	Yes
Diss. Metals SW846 6020/Mercury 7470A	4°C/HNO_3	(1) L HDPE	No
Nitrate + Nitrite (asN) EPA 353.2 & Ammonia (asN) EPA 350.1	4°C/H_2SO_4	(1) L HDPE	Yes
Total Organic Carbon	4°C/H_3PO_4	(2) 40ml Vails	NO

OBSERVATIONS / NOTES:

Filtered Sample Collected Yes[] No[]

Circle if Applicable:

MS/MSD

Duplicate ID No.:

Signature(s): S Grier

Tetra Tech NUS, Inc.

LOW FLOW PURGE DATA SHEET

PROJECT : NSWC CRANE
PROJECT NUMBER: N9060
PROJECT SITE NAME: SWMU 13

WELL ID.: 13MWT43
DATE: 12/4/03
WEATHER: Cloudy, Rain -33°F

Time (Hrs.)	Water Level (Ft. below TOC)	Volume (gal/L)	Flowrate (mL/min)	pH (S.U.)	Cond. (mS/cm)	Turb. (NTU)	DO (mg/L)	Temp. (Celsius)	ORP (mV)	Comments
0900	9.20	0	100	4.45	0.372	55	1.68	12.69	239.1	Slightly Cloudy –
0910	10.75		100	4.25	0.368	20	1.48	12.75	257.7	No Odor
0920	11.85		100	4.20	0.345	13	1.73	12.71	303.4	Clear
0930	12.84		100	4.37	0.319	6.4	4.40	12.61	307.3	"
0940	13.12		100	4.42	0.313	6.5	4.76	12.48	305.9	"
0950	13.55	1.5	100	4.44	0.308	3.9	4.76	12.53	301.9	"
1000	13.78		100	4.45	0.304	3.5	4.69	12.18	299.4	"
1010	13.91		100	4.46	0.303	3.1	4.59	12.11	299.1	"
1020	14.50		100	4.47	0.305	2.7	4.30	12.87	298.0	"
1030	14.80		100	4.47	0.304	2.3	4.36	12.71	298.3	"
1040	15.20	3.0	100	4.47	0.303	1.9	4.37	12.83	298.5	"
										Sampled 13MWT43 @ 1050

Water Quality Meter (S/N) 02B0141
Control Box Type (S/N) Peristaltic pump #400
Turbidity Meter (S/N) 3106-1402

Pump Intake Depth 18.0'

SIGNATURE(S): [signature]

Tetra Tech NUS, Inc.

GROUNDWATER SAMPLE LOG SHEET

Project Site Name: NSWC CRANE, SWMU13
Project No.: N9060 CTO 0279

[] Domestic Well Data
[X] Monitoring Well Data
[] Other Well Type:
[] QA Sample Type:

Sample ID No.: 13GWT4401
Sample Location: 13MWT44
Sampled By: S GRIER
C.O.C. No.: 4828
Type of Sample:
[X] Low Concentration
[] High Concentration

SAMPLING DATA:

	Color (Visual)	pH (S. U.)	S.C. (mS/cm)	Temp. (°C)	Turbidity (NTU)	DO (mg/l)	ORP (mV)	Other NA
Date: 12/4/03								
Time: 1700								
Method: Bladder pump	Clear	7.77	0.595	11.37	4.6	0.79	-70.0	--

PURGE DATA:

	Volume	pH	S.C.	Temp. (C)	Turbidity	DO	Salinity	Other
Date: 12/4/03								
Method: Bladder pump								
Monitor Reading (ppm): 0.0								
Well Casing Diameter & Material Type: 2" PVC			See Low Flow Purge Data Sheets					
Total Well Depth (TD): 85.81								
Static Water Level (WL): 64.49								
One Casing Volume (gal/L): 3.5								
Start Purge (hrs): 1430								
End Purge (hrs): 1650								
Total Purge Time (min): 140								
Total Vol. Purged (gal/L): 4.0								

SAMPLE COLLECTION INFORMATION:

Analysis	Preservative	Container Requirements	Collected
Explosives SW-846 8330	4°C	(2) L Glass Amber	Yes
Micellaneous Explosives SW-846 8330	4°C	(2) L Glass Amber	Yes
Total Metals SW846 6020/Mercury 7470A	4°C/HNO_3	(1) L HDPE	Yes
Diss. Metals SW846 6020/Mercury 7470A	4°C/HNO_3	(1) L HDPE	No
Nitrate + Nitrite (asN) EPA 353.2 & Ammonia (asN) EPA 350.1	4°C/H_2SO_4	(1) L HDPE	Yes
Total Organic Carbon	4°C/H_3PO_4	(2) 40ml Vails	No

OBSERVATIONS / NOTES:

Filtered Sample Collected Yes[] No[]

Circle if Applicable:

MS/MSD	Duplicate ID No.:
—	—

Signature(s):

Tetra Tech NUS, Inc.

LOW FLOW PURGE DATA SHEET

PROJECT : NSWC CRANE
PROJECT NUMBER: N9060
PROJECT SITE NAME: SWMU 13

WELL ID.: 13MWT 44
DATE: 12/4/03
WEATHER: Cloudy, Rain, 33°F

Time (Hrs.)	Water Level (Ft. below TOC)	Volume (gal/L)	Flowrate (mL/min)	pH (S.U.)	Cond. (mS/cm)	Turb. (NTU)	DO (mg/L)	Temp. (Celsius)	ORP (mV)	Comments
1430	64.49	0	150	7.15	0.489	60	4.18	10.94	119.8	Clear, no odor
1440	65.70		100	7.28	0.587	37	3.86	11.11	130.5	Slightly Cloudy,
1450	66.20		100	7.56	0.597	21	3.12	11.51	133.5	Clear
1500	66.50		100	7.73	0.595	24	2.16	11.44	52.0	"
1510	66.80		80	7.77	0.593	19	1.94	11.39	8.7	"
1520	66.90		80	7.81	0.593	14	1.84	11.35	-15.7	"
1530	66.69		80	7.83	0.594	9.6	1.72	11.36	-34.7	"
1540	66.72		80	7.82	0.597	7.5	1.46	11.43	-50.4	"
1550	66.74		80	7.81	0.597	6.9	1.24	11.45	-56.4	"
1600	66.75		80	7.79	0.597	5.3	1.11	11.39	-61.1	"
1610	66.77		80	7.78	0.596	4.9	0.99	11.30	-63.7	"
1620	66.80		80	7.77	0.595	4.6	0.92	11.35	-67.0	"
1630	66.83		80	7.77	0.596	3.1	0.85	11.37	-68.1	"
1640	66.87		80	7.77	0.596	5.2	0.83	11.35	-69.0	"
1650	66.90	4 gal	80	7.77	0.595	4.6	0.79	11.37	-70.0	"
										13 MWT 44
										Sampled @ 1700

Water Quality Meter (S/N) 02B0141
Control Box Type (S/N) NA
Turbidity Meter (S/N) 3106-1402

Pump Intake Depth 79.0'

SIGNATURE(S): [signature]

Tetra Tech NUS, Inc.

GROUNDWATER SAMPLE LOG SHEET

Project Site Name: NSWC CRANE, SWMU13
Project No.: N9060 CTO 0279

[] Domestic Well Data
[X] Monitoring Well Data
[] Other Well Type:
[] QA Sample Type:

Sample ID No.: 13 GWT 4501
Sample Location: SWMU 13
Sampled By: SGrier
C.O.C. No.: 4836
Type of Sample:
[X] Low Concentration
[] High Concentration

SAMPLING DATA:

TR →

	Color (Visual)	pH (S. U.)	S.C. (mS/cm)	Temp. (°C)	Turbidity (NTU)	DO (mg/l)	ORP (mV)	Other NA
Date: 12/8/03								
Time: 1558								
Method: BLADDER PUMP	V.Sl. Cloudy	8.19	0.357	13.36	75	0.55	+55.5	---

PURGE DATA:

SG →

	Volume	pH	S.C.	Temp. (C)	Turbidity	DO	Salinity	Other
Date: 12/7/03								
Method: Bladder pump								
Monitor Reading (ppm): –								
Well Casing Diameter & Material Type: 2" PVC			See Low Flow Purge Data Sheets					
Total Well Depth (TD): 83.00								
Static Water Level (WL): 73.84								
One Casing Volume (gal/L): 1.5								
Start Purge (hrs): 1615								
End Purge (hrs): 1755								
Total Purge Time (min): 160								
Total Vol. Purged (gal/L): 4.0								

SAMPLE COLLECTION INFORMATION:

Analysis	Preservative	Container Requirements	Collected
Explosives SW-846 8330	4°C	12/8(1) (2) L Glass Amber	Yes
Micellaneous Explosives SW-846 8330	4°C	12/8(1) (2) L Glass Amber	Yes
Total Metals SW846 6020/Mercury 7470A	4°C/HNO_3	12/9 @ 1645 (1) L HDPE	Yes
Diss. Metals SW846 6020/Mercury 7470A	4°C/HNO_3	12/10 @ 1300 (1) L HDPE	Yes — F
Nitrate + Nitrite (asN) EPA 353.2 & Ammonia (asN) EPA 350.1	4°C/H_2SO_4	12/10 @ 1300 (1) L HDPE	Yes
Total Organic Carbon	4°C/H_3PO_4	(2) 40ml Vails	NO

OBSERVATIONS / NOTES:

Filtered Sample Collected Yes[X] No[]

BLADDER PUMP ON BOTTOM OF WELL.
WELL WAS PUMP dry to Intake - Will sample tomorrow.
WELL WAS sampled over a period of 3 days.

Circle if Applicable:

MS/MSD | Duplicate ID No.: —

Signature(s): Tay Agnt

Tetra Tech NUS, Inc.

LOW FLOW PURGE DATA SHEET

PROJECT : NSWC CRANE
PROJECT NUMBER: N9060
PROJECT SITE NAME: SWMU 13

WELL ID.: 13MWT45
DATE: 12/7/03
WEATHER:

Time (Hrs.)	Water Level (Ft. below TOC)	Volume (gal.)	Flowrate (mL/min)	pH (S.U.)	Cond. (mS/cm)	Turb. (NTU)	DO (mg/L)	Temp. (Celsius)	ORP (mV)	Comments
1515	73.95	—	—	—	—	—	—	—	—	START PURGE
1525	74.23	1.0	100	8.23	0.383	250	1.92	14.04	72.9	GREY, CLOUDY,
1535	74.58		60	7.94	0.373	260	1.19	13.26	77.2	NO ODOR
1545	74.94	2.2	60	7.87	0.372	310	1.50	13.05	82.3	
1555	75.15		60	7.83	0.374	370	1.42	13.16	85.6	
1605	74.45	3.6	60	7.78	0.378	420	1.74	13.22	90.1	
1615	75.75		60	7.74	0.381	450	2.00	13.28	95.5	
1625	76.10	4.3	70.	7.68	0.387	450	2.19	13.18	100.9	
1635	76.39	5.0	70	7.63	0.393	450	2.32	12.92	106.7	
1645	—	—	—	—	—	—	—	—	→	Draw down will not stabilize will dry well out
1655	77.15		110	7.55	0.395	290	1.35	13.27	111.6	Increased Flow Rate
1705	77.66		110	7.58	0.389	190	0.88	13.37	109.0	
1715	78.36		110	7.65	0.380	100	0.65	13.35	104.7	
1725	78.97		110	7.80	0.371	85	0.58	13.28	95.0	
1735	79.58		110	7.95	0.358	80	0.42	13.15	76.5	
1745	80.00		140	8.09	0.350	60	0.49	12.98	65.3	
1755	dry to	15 L	150+	8.19	0.357	75	0.55	13.36	55.5	Dry to pump
	pump intake									Intake

Water Quality Meter (S/N) 02B0141
Control Box Type (S/N) MP10-1551
Turbidity Meter (S/N) 3106-1402

Pump Intake Depth 82'

SIGNATURE(S): Scott [illegible]

Tetra Tech NUS, Inc.

GROUNDWATER SAMPLE LOG SHEET

Project Site Name: NSWC CRANE, SWMU13
Project No.: N9060 CTO 0279

[] Domestic Well Data
[X] Monitoring Well Data
[] Other Well Type:
[] QA Sample Type:

Sample ID No.: 13GWT601
Sample Location: 13GWT46
Sampled By: Goodit
C.O.C. No.: 4036
Type of Sample:
[X] Low Concentration
[] High Concentration

SAMPLING DATA:

Date: 12-9-03	Color (Visual)	pH (S. U.)	S.C. (mS/cm)	Temp. (°C)	Turbidity (NTU)	DO (mg/l)	ORP (mV)	Other NA
Time: 1124								
Method: Bladder	Clear	6.60	1.021	12.45	8.72	0.99	-32.5	---

PURGE DATA:

Date: 12-9-03	Volume	pH	S.C.	Temp. (C)	Turbidity	DO	Salinity	Other
Method: Bladder	11.2	6.60	1.021	12.45	8.72	0.99	—	—
Monitor Reading (ppm): —								
Well Casing Diameter & Material								
Type: 2" Ø PVC			See Low Flow Purge Data Sheets					
Total Well Depth (TD): 67.60								
Static Water Level (WL): 58.19								
One Casing Volume(gal/L): 5.81								
Start Purge (hrs): 0902								
End Purge (hrs): 1122								
Total Purge Time (min): 140								
Total Vol. Purged (gal/L): 11.2								

SAMPLE COLLECTION INFORMATION:

Analysis	Preservative	Container Requirements	Collected
Explosives SW-846 8330	4°C	(2) L Glass Amber	Yes
Micellaneous Explosives SW-846 8330	4°C	(2) L Glass Amber	Yes
Total Metals SW846 6020/Mercury 7470A	4°C/HNO_3	(1) L HDPE	Yes
Diss. Metals SW846 6020/Mercury 7470A	4°C/HNO_3	(1) L HDPE	No
Nitrate + Nitrite (asN) EPA 353.2 & Ammonia (asN) EPA 350.1	4°C/H_2SO_4	(1) L HDPE	Yes
Total Organic Carbon	4°C/H_3PO_4	(2) 40ml Vails	No

OBSERVATIONS / NOTES:

Filtered Sample Collected Yes[] No[X] Turbidity prior to metals sample was 7.11.

67.60
58.19
9.41 (.163) = 1.53 gal = 5.81 L

Circle if Applicable:

MS/MSD — Duplicate ID No.: —

Signature(s):

Tetra Tech NUS, Inc.

LOW FLOW PURGE DATA SHEET

PROJECT : NSWC CRANE
PROJECT NUMBER: N9060
PROJECT SITE NAME: SWMU 13

WELL ID.: 13GWT4601
DATE: 12-9-03
WEATHER: 53° cloudy

Time (Hrs.)	Water Level (Ft. below TOC)	Volume (gal/L)	Flowrate (mL/min)	pH (S.U.)	Cond. (mS/cm)	Turb. (NTU)	DO (mg/L)	Temp. (Celsius)	ORP (mV)	Comments
0902	58.19	–	–	–	–	–	–	–	–	Start purge
0912	58.24	0.8	800	6.77	1.022	229	1.49	12.32	18.8	cloudy
0922	58.22	1.6	800	6.78	1.021	163	1.52	12.27	5.5	"
0932	58.20	2.4	800	6.78	1.019	103	1.29	12.31	-17.1	slight cloudy
0942	58.21	3.2	800	6.77	1.018	93.2	1.25	12.35	-27.9	"
0952	58.22	4.0	800	6.75	1.017	85.3	1.11	12.36	-35.8	"
1002	58.23	4.8	800	6.74	1.016	61.8	1.17	12.37	-37.3	"
1012	58.24	5.6	800	6.73	1.017	55.2	1.11	12.42	-31.9	clearer
1022	58.24	6.4	800	6.72	1.017	36.4	1.11	12.41	-31.0	"
1032	58.24	7.2	800	6.70	1.018	30.8	1.04	12.42	-35.4	"
1042	58.24	8.0	800	6.66	1.018	25.3	1.00	12.41	-38.2	"
1052	58.24	8.8	800	6.64	1.020	18.6	1.03	12.43	-36.2	clear
1102	58.24	9.6	800	6.62	1.021	13.3	0.91	12.43	-34.1	"
1107	58.24	10.0	800	6.61	1.021	12.1	0.97	12.42	-33.2	"
1112	58.24	10.4	400	6.60	1.021	11.3	0.96	12.42	-32.5	"
1117	58.24	10.8	400	6.60	1.021	10.44	0.96	12.44	-32.8	"
1122	58.24	11.2	400	6.60	1.021	8.72	0.99	12.45	-32.5	stop purge

Water Quality Meter (S/N) 98F0478 AB
Control Box Type (S/N) MP101550
Turbidity Meter (S/N) 3317 2402

Pump Intake Depth 62'

SIGNATURE(S): [illegible]

Tetra Tech NUS, Inc.

GROUNDWATER SAMPLE LOG SHEET

Project Site Name: NSWC CRANE, SWMU13
Project No.: N9060 CTO 0279

[] Domestic Well Data
[X] Monitoring Well Data
[] Other Well Type:
[] QA Sample Type:

Sample ID No.: 13EWT4701
Sample Location: SWMU 13
Sampled By: S. GRIER
C.O.C. No.: 4836
Type of Sample:
[X] Low Concentration
[] High Concentration

SAMPLING DATA:

	Color (Visual)	pH (S. U.)	S.C. (mS/cm)	Temp. (°C)	Turbidity (NTU)	DO (mg/l)	ORP (mV)	Other NA
Date: 12-9-03								
Time: 1110								
Method: Peristaltic	Clear	3.46	1634	12.42	5.4	1.50	409.9	—

PURGE DATA:

	Volume	pH	S.C.	Temp. (C)	Turbidity	DO	Salinity	Other
Date: 12/9/03								
Method: Peristaltic pump								
Monitor Reading (ppm): —								
Well Casing Diameter & Material Type: 2" PVC			See Low Flow Purge Data Sheets					
Total Well Depth (TD): 20.20								
Static Water Level (WL): 6.68								
One Casing Volume (gal/L): 2.2								
Start Purge (hrs): 0930								
End Purge (hrs): 1100								
Total Purge Time (min): 90								
Total Vol. Purged (gal/L): 9.4								

SAMPLE COLLECTION INFORMATION:

Analysis	Preservative	Container Requirements	Collected
Explosives SW-846 8330	4°C	(2) L Glass Amber	Yes
Micellaneous Explosives SW-846 8330	4°C	(2) L Glass Amber	Yes
Total Metals SW846 6020/Mercury 7470A	4°C/HNO_3	(1) L HDPE	Yes
Diss. Metals SW846 6020/Mercury 7470A	4°C/HNO_3	(1) L HDPE	NO
Nitrate + Nitrite (asN) EPA 353.2 & Ammonia (asN) EPA 350.1	4°C/H_2SO_4	(1) L HDPE	Yes
Total Organic Carbon	4°C/H_3PO_4	(2) 40ml Vails	NO

OBSERVATIONS / NOTES:

Filtered Sample Collected Yes[] No[]

Circle if Applicable:

MS/MSD

Duplicate ID No.:

Signature(s): Scott Grier

Tetra Tech NUS, Inc.

LOW FLOW PURGE DATA SHEET

PROJECT : NSWC CRANE
PROJECT NUMBER: N9060
PROJECT SITE NAME: SWMU 13

WELL ID.: 13MWT47
DATE: 12/9/03
WEATHER: Cloudy, Lt. Breeze, 51°F

Time (Hrs.)	Water Level (Ft. below TOC)	Volume (gal/L)	Flowrate (mL/min)	pH (S.U.)	Cond. (mS/cm)	Turb. (NTU)	DO (mg/L)	Temp. (Celsius)	ORP (mV)	Comments
0930	7.18	0.3	125	3.53	1555	13.7	5.48	12.55	356.6	Clear, No odor
0940	7.41	0.6	125	3.36	1607	14.0	1.95	12.46	402.3	
0950	7.46	1.7	110	3.39	1624	6.1	1.78	12.42	409.4	
1000	7.51	2.8	110	3.40	1626	6.9	1.65	12.46	409.9	
1010	7.56	3.9	110+	3.41	1628	7.3	1.60	12.50	409.3	
1020	7.63	5.0	110	3.42	1630	7.8	1.54	12.54	409.5	
1030	7.61	6.1	110	3.44	1637	6.0	1.65	12.53	410.4	
1040	7.59	7.2	110	3.44	1636	4.3	1.54	12.47	410.6	
1050	7.60	8.3	110	3.45	1635	4.9	1.52	12.45	410.1	
1100	7.61	9.4	110	3.46	1634	5.4	1.50	12.42	409.9	
										Samples 13GWT47 taken @ 1110

Water Quality Meter (S/N) 02B0141
Control Box Type (S/N) Peristoltic pump #400
Turbidity Meter (S/N) 3106-1402

Pump Intake Depth 15.0

SIGNATURE(S): Scott Grin

APPENDIX C.3.4
SWMU 16 GROUND WATER SAMPLE LOG SHEETS
ROUND 2

Tetra Tech NUS, Inc.

GROUNDWATER SAMPLE LOG SHEET

Project Site Name: NSWC CRANE, SWMU16
Project No.: N9060 CTO 0279

[] Domestic Well Data
[X] Monitoring Well Data
[] Other Well Type:
[] QA Sample Type:

Sample ID No.: 16GW0102
Sample Location: WES-14-01-83
Sampled By: M. COCHRAN
C.O.C. No.: 4808
Type of Sample:
[X] Low Concentration
[] High Concentration

SAMPLING DATA:

	Color (Visual)	pH (S. U.)	S.C. (mS/cm)	Temp. (°C)	Turbidity (NTU)	DO (mg/l)	ORP (mV)	Other NA
Date: 10-26								
Time: 1255								
Method: BLADDER	CLEAR	6.17	1.452	12.72	.61	.70	-5.0	---

PURGE DATA:

	Volume	pH	S.C.	Temp. (C)	Turbidity	DO	Salinity	Other
Date: 10-26-03								
Method: BLADDER								
Monitor Reading (ppm): 0								
Well Casing Diameter & Material Type: 53.70			See Low Flow Purge Data Sheets					
Total Well Depth (TD): ~~54.0~~								
Static Water Level (WL): 34.12								
One Casing Volume(gal/L): 12								
Start Purge (hrs): 0910								
End Purge (hrs): 1250								
Total Purge Time (min): 3h 40m								
Total Vol. Purged (gal/L): 12								

SAMPLE COLLECTION INFORMATION:

Analysis	Preservative	Container Requirements	Collected
Volatiles SW-846 8260B	4°C/HCl	(3) 40ml Vails	Yes
Volatiles SW-846 8015B	4°C/HCl	(3) 40ml Vails	Yes
Explosives SW-846 8330	4°C	(2) L Glass Amber	Yes
Micellaneous Explosives SW-846 8330	4°C	(2) L Glass Amber	Yes
Total Metals SW846 6020/Mercury 7470A	4°C/HNO_3	(1) L HDPE	Yes
Diss. Metals SW846 6020/Mercury 7470A	4°C/HNO_3	(1) L HDPE	NO
Nitrate + Nitrite (asN) EPA 353.2 &	4°C/H_2SO_4	(1) L HDPE	Yes
Sulfate & Chloride	4°C	(1) L HDPE	Yes
Methane, Ethane &Ethene	4°C	(2) 40ml Vails	NO
Total Organic Carbon	4°C/H_3PO_4	(2) 40ml Vails	NO

OBSERVATIONS / NOTES:

Filtered Sample Collected Yes[] No[]

Circle if Applicable:

MS/MSD	Duplicate ID No.:	Signature(s):

Tetra Tech NUS, Inc.

LOW FLOW PURGE DATA SHEET

PROJECT SITE NAME: NSWC CRANE
PROJECT NUMBER: N9060, CTO 0279

WELL ID.: 16GW0107
DATE: 10-26-03

Time (Hrs.)	Water Level (Ft. below TOC)	Flow (mL/Min.)	pH (S.U.)	Cond. (mS/cm)	Turb. (NTU)	DO (mg/L)	Temp. (Celsius)	Salinity (%)	ORP (mV)	Comments (Volume & Color)
0910	34.12	70	6.29	1.420	230	3.0	12.08	–	-5	0 CLOUDY
0920	34.70	70	6.29	1.438	210	2.48	12.08	–	-4	700
0930	35.60	70	6.30	1.426	120	1.34	12.11	–	-9.2	1400
0940	37.70	60	6.31	1.403	68	1.24	10.99	–	-10.8	2100
0950	35.90	60	6.31	1.415	49.7	1.14	11.94	–	-9.1	2700
1000	36.52	60	6.32	1.403	49.1	1.00	11.88	–	-13.5	3300
1010	36.91	60	6.31	1.402	32.1	.97	11.89	–	-12.3	3900
1020	37.30	60	6.30	1.393	24.8	.86	11.92		-10.8	4500 CLEAR
1030	37.70	50	6.31	1.374	77.6	.89	12.05	–	-11.2	5100
1040	37.95	50	6.30	1.381	46.3	.89	11.92	–	-13.4	5600
1050	38.24	50	6.28	1.374	24.7	.86	11.75	–	-11.2	6100
1100	38.50	50	6.26	1.382	15.1	.84	11.98	–	-10.7	6600
1110	38.72	50	6.25	1.395	8.68	.79	12.17	–	-10.6	7100
1120	38.90	50	6.24	1.401	7.64	.80	12.26	–	-11.2	7600
1130	* –	50	6.24	1.412	7.65	.74	12.16	–	-11.5	8100
1140	–	50	6.23	1.414	6.41	.62	12.18	–	-12.8	8600
1150	–	50	6.23	1.424	7.17	.49	12.12	–	-14.4	9100
1200	–	50	6.22	1.429	4.96	.59	12.22	–	-15.4	9600
1210	–	50	6.21	1.431	3.41	.52	12.05	–	-15.6	10100
1220	–	50	6.21	1.436	2.44	.47	12.33	–	-13.3	10600
1230	–	50	6.20	1.444	2.44	.51	12.64	–	-10.6	11100
1240	–	50	6.19	1.446	1.65	.51	12.72	–	-7.8	11600
1250	–	50	6.17	1.452	.61	.70	12.72	–	-5.0	12100

SIGNATURE(S): [signature]

* – METER PROBE HIT TOP OF PUMP MEASUREMENT CAN'T BE TAKEN

Tetra Tech NUS, Inc.

GROUNDWATER SAMPLE LOG SHEET

Project Site Name: NSWC CRANE, SWMU16
Project No.: N9060 CTO 0279

[] Domestic Well Data
[X] Monitoring Well Data
[] Other Well Type:
[] QA Sample Type:

Sample ID No.: 16GW0203
Sample Location: WES-14-02-83
Sampled By: FCW
C.O.C. No.: 4812 & 4808
Type of Sample:
[X] Low Concentration
[] High Concentration

SAMPLING DATA:

	Color (Visual)	pH (S. U.)	S.C. (mS/cm)	Temp. (°C)	Turbidity (NTU)	DO (mg/l)	ORP (mV)	Other NA
Date: 10-25-03								
Time: 1608								
Method: LOW FLOW	CLEAR	6.54	1.750	15.27	0.80	6.3	-0.8	---

PURGE DATA:

	Volume	pH	S.C.	Temp. (C)	Turbidity	DO	Salinity	Other
Date: 10-25-03								
Method: LOW FLOW								
Monitor Reading (ppm): 0.0								
Well Casing Diameter & Material Type: 2" PVC			See Low Flow Purge Data Sheets					
Total Well Depth (TD): 28.74								
Static Water Level (WL): 16.25								
One Casing Volume(gal/L): 2.0								
Start Purge (hrs): 1436								
End Purge (hrs): 1608								
Total Purge Time (min): 92								
Total Vol. Purged (gal/L): 2.3								

SAMPLE COLLECTION INFORMATION:

Analysis	Preservative	Container Requirements	Collected
Volatiles SW-846 8260B	4°C/HCl	(3) 40ml Vails	Yes
Volatiles SW-846 8015B	4°C/HCl	(3) 40ml Vails	Yes
Explosives SW-846 8330	4°C	(2) L Glass Amber	Yes
Micellaneous Explosives SW-846 8330	4°C	(2) L Glass Amber	Yes
Total Metals SW846 6020/Mercury 7470A	4°C/HNO_3	(1) L HDPE	Yes
Diss. Metals SW846 6020/Mercury 7470A	4°C/HNO_3	(1) L HDPE	NO
Nitrate + Nitrite (asN) EPA 353.2 &	4°C/H_2SO_4	(1) L HDPE	Yes
Sulfate & Chloride	4°C	(1) L HDPE	Yes
Methane, Ethane &Ethene	4°C	(2) 40ml Vails	✓
Total Organic Carbon	4°C/H_3PO_4	(2) 40ml Vails	✓

OBSERVATIONS / NOTES:

Filtered Sample Collected Yes[] No[X]

Circle if Applicable:

MS/MSD

Duplicate ID No.:

Signature(s):

Tetra Tech NUS, Inc.

LOW FLOW PURGE DATA SHEET

PROJECT SITE NAME: NSWC CRANE
PROJECT NUMBER: N9060, CTO 0279

WELL ID.: WES-14-02-03
DATE: 10-23-03

Time (Hrs.)	Water Level (Ft. below TOC)	Flow (mL/Min.)	pH (S.U.)	Cond. (mS/cm)	Turb. (NTU)	DO (mg/L)	Temp. (Celsius)	Salinity (%)	ORP (mV)	Comments (Volume & Color)
1436	16.25									START
1450	16.44	100	6.44	2.286	1.2	10.0	15.96	–	8.7	
1500	16.45	↓	6.47	2.203	0.83	8.2	15.79	–	6.2	
1510	16.46		6.48	2.105	0.97	7.0	15.70	–	1.2	
1520	16.43	90	6.48	2.050	1.02	7.3	15.55	–	0.5	
1530	16.44		6.49	1.972	1.45	7.3	15.41	–	1.8	
1540	16.44		6.50	1.913	0.79	6.9	15.44	–	0.6	
1550	16.44		6.51	1.859	0.70	6.7	15.45	–	-0.1	
1600	16.45		6.52	1.753	1.10	6.5	15.31	–	-0.7	
1608	16.45	↓	6.54	1.750	0.80	6.3	15.27	–	-0.8	SAMPLE
1750										END

SIGNATURE(S): [illegible]

Note: Analyte, method, and/or equipment may be deleted from form if not being performed.

Tetra Tech NUS, Inc.

FIELD ANALYTICAL LOG SHEET
GEOCHEMICAL PARAMETERS

Project Site Name: NSWC CRANE
Project No.: N9060
Sampled By: F. WUDKWYCH 10/25/03
Field Analyst: T ROHHN & F. RAMSEY 10/26/03
Field Form Checked as per QA/QC Checklist (initials): TR

Sample ID No.: WES-14-02-03
Sample Location: 16GW0203
Duplicate: ☐
Blank: ☐

SAMPLING DATA:

	Color (Visual)	pH (S.U.)	S.C. (mS/cm)	Temp. (°C)	Turbidity (NTU)	DO (mg/l)	Salinity (%)	ORP (Eh) (+/- mv)
Date: 10/25/03 Time: 1608 Method: Peristaltic	CLEAR	6.54	1.750	15.27	0.80	6.3	—	-0.8

SAMPLE COLLECTION/ANALYSIS INFORMATION:

ORP (Eh) (+/- mv)
Electrode Make & Model: YSI
Reference Electrode (circle one): Silver-Silver Chloride / Calomel / Hydrogen

Dissolved Oxygen:
Equipment: Chemetrics Test Kit
Concentration: 0.2 ppm

Range Used:	Range	Method	Concentration ppm
☑	0 to 1 ppm	K-7510	0.2
☐	1 to 12 ppm	K-7512	

Analysis Time: 1025

Notes:

Alkalinity:
Equipment: Chemetrics Test Kit
Concentration: 300 ppm

Range Used:	Range	Method	Concentration ppm
☐	10 to 100 ppm	K-9810	
☒	50 to 500 ppm	K-9815	300
☐	100 to 1000 ppm	K-9820	

Analysis Time: 1035
Filtered: ☐

Notes:

Carbon Dioxide:
Equipment: Chemetrics Test Kit
Concentration: 105 ppm

Range Used:	Range	Method	Concentration ppm
☐	10 to 100 ppm	K-1910	
☒	100 to 1000 ppm	K-1920	105
☐	250 to 2500 ppm	K-1925	

Analysis Time: 1048

Notes:

Ferrous Iron (Fe^{2+}):
(TR) ~~Dilute Factor 5 x 0.95~~ > 3.30
Equipment: DR-850 DR-8 9c Range: 0 - 3.00 mg/L
Program/Module: ~~500nm~~ 33
Concentration: (TR) ~~4.75~~ ppm
Analysis Time: 1053
Notes: High Limit
As Diluted = >3.30 p.m (TR) ~~Did Factor 2 Dilution > 3.30~~
Filtered: ☐

Hydrogen Sulfide (H_2S):
Range: 0 - 5 mg/L
Equipment: HS-C Other:
Concentration: 0.0 ppm
Exceeded 5.0 mg/L range on color chart: ☐
Analysis Time: 1059
Notes:

Note: Analyte, method, and/or equipment may be deleted from form if not being performed.

FIELD ANALYTICAL LOG SHEET
GEOCHEMICAL PARAMETERS

Tetra Tech NUS, Inc.

Project Site Name: NSWC CRANE
Sample ID No.: WES-14-02-83
Project No.: N9060
Sample Location: 16GW0203
Sampled By: F. WUDKWYCH
Duplicate: ☐
Field Analyst: T. ROSAHN & F. RAMSER
Blank: ☐

Sulfide (S^{2-}):
Equipment: DR-850 DR-8 90 Range: 0 - 0.70 mg/L
Concentration: 0.0 ppm
Program/Module: 610nm 93
Analysis Time: 1104 Filtered: ☐
Notes:

Nitrite (NO_2^--N):
Concentration: 0.003 ppm
Equipment: DR-850 DR-8 90 Range: 0 - 0.350 mg/L
Analysis Time: 1121 Filtered: ☐
Program/Module: 62
Standard Solution: ☐ Results: _____ Reagent Blank Correction: ☐
Notes:

Manganese (Mn^{2+}):
Concentration: (Tx) ~~1.5~~ ppm 1.5 ppm
Equipment: DR-850 DR-8 90 Range: 0 - 20.0 mg/L
Analysis Time: 1131 Filtered: ☐
Program/Module: 525nm 41
Notes:

QA/QC Checklist:
All data fields have been completed as necessary: ☑
Correct measurement units are cited in the SAMPLING DATA block: ☑
Values cited in the SAMPLING DATA block are consistent with the Groundwater Sample Log Sheet: ☑
Mulitplication is correct for each *Multiplier* table: ☑
Final calulated concentration is within the appropriate *Range Used* block: ☑
Alkalinity *Relationship* is determined appropriatly as per manufacturer (HACH) instructions: ☑
QA/QC sample (e.g., Std. Additions, etc.) frequency is appropriate as per the project planning documents: ☑
Nitrite Interference treatment was used for Nitrate test if Nitrite was detected: ~~☐~~ NA
Title block on ~~each~~ 1st page of form is initialized by person who performed this QA/QC Checklist: ☑

WELL NA WAS RUN NEXT day due to 1800 Hr deadline to Exist Army property.

Tetra Tech NUS, Inc.

GROUNDWATER SAMPLE LOG SHEET

Project Site Name: NSWC CRANE, SWMU16
Project No.: N9060 CTO 0279

[] Domestic Well Data
[X] Monitoring Well Data
[] Other Well Type:
[] QA Sample Type:

Sample ID No.: 16GW0302
Sample Location: WES-14-03-83
Sampled By: T. ROJAHN
C.O.C. No.: 4818 & 4819
Type of Sample:
[X] Low Concentration
[] High Concentration

SAMPLING DATA:

	Color (Visual)	pH (S. U.)	S.C. (mS/cm)	Temp. (°C)	Turbidity (NTU)	DO (mg/l)	ORP (mV)	Other NA
Date: 11/8/03								
Time: 1215								
Method: SAME	CLEAR	4.82	0.355	13.62	1.06	0.74	+350	---

PURGE DATA:

	Volume	pH	S.C.	Temp. (C)	Turbidity	DO	Salinity	Other
Date: 11/8/03								
Method: PERISTALTIC								
Monitor Reading (ppm): –								
Well Casing Diameter & Material								
Type: 2" ø PVC			See Low Flow Purge Data Sheets					
Total Well Depth (TD): 38.31								
Static Water Level (WL): 20.75								
One Casing Volume(gal/L): 10.8								
Start Purge (hrs): 1015								
End Purge (hrs): 1215								
Total Purge Time (min): 120								
Total Vol. Purged (gal/L) 12.1								

SAMPLE COLLECTION INFORMATION:

Analysis	Preservative	Container Requirements	Collected
Volatiles SW-846 8260B	4°C/HCl	(3) 40ml Vails	Yes
Volatiles SW-846 8015B	4°C/HCl	(3) 40ml Vails	Yes
Explosives SW-846 8330	4°C	(2) L Glass Amber	Yes
Micellaneous Explosives SW-846 8330	4°C	(2) L Glass Amber	Yes
Total Metals SW846 6020/Mercury 7470A	4°C/HNO_3	(1) L HDPE	Yes
Diss. Metals SW846 6020/Mercury 7470A	4°C/HNO_3	(1) L HDPE	NO
Nitrate + Nitrite (asN) EPA 353.2 &	4°C/H_2SO_4	(1) L HDPE	Yes
Sulfate & Chloride	4°C	(1) L HDPE	Yes
Methane, Ethane &Ethene	4°C	(2) 40ml Vails	YES ← Vials Broke in Transit to LAB
Total Organic Carbon	4°C/H_3PO_4	(2) 40ml Vails	NO

OBSERVATIONS / NOTES:

Filtered Sample Collected Yes[] No[X]

38.31 - 20.75 = 17.56 x 0.163 = 2.8 gal or 10.8 L

INTAKE @ MID SCREEN

Circle if Applicable:

MS/MSD | Duplicate ID No.:

Signature(s):

Tetra Tech NUS, Inc.

LOW FLOW PURGE DATA SHEET

PROJECT SITE NAME: NSWC CRANE
PROJECT NUMBER: N9060, CTO 0279

WELL ID.: WES-14-03-83
DATE: 11/8/03

Time (Hrs.)	Water Level (Ft. below TOC)	Flow (mL/Min.)	pH (S.U.)	Cond. (mS/cm)	Turb. (NTU)	DO (mg/L)	Temp. (Celsius)	Salinity (%)	ORP (mV)	Comments (Volume & Color)
1015	20.75	—	—	—	—	—	—	—	—	Start Purge
1025	22.27	100	5.16	0.400	33.3	2.49	12.02	—	283	1000 CLEAR
1035	23.05	110	5.20	0.364	21.0	1.06	10.97	—	282	2100 "
1045	23.35	100	5.36	0.356	11.1	1.00	11.26	—	281	3100 "
1055	23.61	100	5.26	0.365	10.51	0.92	12.49	—	293	4100 "
1105	23.83	100	4.99	0.370	10.23	0.74	12.50	—	307	5100 "
1115	23.91	100	5.01	0.364	7.25	0.71	12.44	—	336	6100 "
1125	23.91	100	4.94	0.368	5.81	0.69	12.91	—	326	7100 "
1135	23.91	100	4.99	0.368	3.06	0.68	12.92	—	324	8100 "
1145	23.91	100	4.96	0.370	1.82	0.76	13.40	—	332	9100 "
1155	23.91	100	4.82	0.365	1.50	0.75	13.59	—	349	10100 "
1205	23.91	100	4.87	0.360	1.25	0.75	13.73	—	355	11100 "
1215	23.91	100	4.82	0.355	1.06	0.74	13.62	—	350	12100 "
1215	—	—	—	—	—	—	—	—	—	SAMPLE TIME

SIGNATURE(S): [signature]

Note: Analyte, method, and/or equipment may be deleted from form if not being performed.

Tetra Tech NUS, Inc.

FIELD ANALYTICAL LOG SHEET
GEOCHEMICAL PARAMETERS

Project Site Name: NSWC CRANE
Project No.: N9060
Sampled By: T. ROJAHN
Field Analyst: TR
Field Form Checked as per QA/QC Checklist (initials): TR

Sample ID No.: 16GW0302
Sample Location: WES-14-03-83
Duplicate: ☐
Blank: ☐

SAMPLING DATA:

	Color	pH	S.C.	Temp.	Turbidity	DO	Salinity	ORP (Eh)
Date: 11-8-03								
Time: 1215	(Visual)	(S.U.)	(mS/cm)	(°C)	(NTU)	(mg/l)	(%)	(+/- mv)
Method: Peristaltic	CLEAR	4.82	0.355	13.62	1.06	0.74	~~+350~~ 70	+350

SAMPLE COLLECTION/ANALYSIS INFORMATION:

ORP (Eh) (+/- mv)

Electrode Make & Model: YSI

Reference Electrode (circle one): Silver-Silver Chloride / Calomel / Hydrogen

Dissolved Oxygen:

Equipment: Chemetrics Test Kit

Concentration: 1 ppm

Range Used:	Range	Method	Concentration ppm
☑	0 to 1 ppm	K-7510	1
☑	1 to 12 ppm	K-7512	1

Analysis Time: 1251

Notes:

Alkalinity:

Equipment: Chemetrics Test Kit

Concentration: <10 ppm

Range Used:	Range	Method	Concentration ppm
☑	10 to 100 ppm	K-9810	<10
☑	50 to 500 ppm	K-9815	
☐	100 to 1000 ppm	K-9820	

Analysis Time: 1300

Filtered: ☐

Notes: No color change (pink)

Carbon Dioxide:

Equipment: Chemetrics Test Kit

Concentration: 130 ppm

Range Used:	Range	Method	Concentration ppm
☐	10 to 100 ppm	K-1910	
☑	100 to 1000 ppm	K-1920	130
☐	250 to 2500 ppm	K-1925	

Analysis Time: 1302

Notes:

Ferrous Iron (Fe^{2+}):

Equipment: DR-850 DR-890 Range: 0 - 3.00 mg/L
Program/Module: ~~500nm~~ 33

Concentration: 0.54 ppm

Analysis Time: 1318

Filtered: ☐

Notes:

Hydrogen Sulfide (H_2S): Range: 0 - 5 mg/L

Equipment: HS-C Other:

Exceeded 5.0 mg/L range on color chart: ☐

Concentration: 0.0 ppm

Analysis Time: 1320

Notes:

Note: Analyte, method, and/or equipment may be deleted from form if not being performed.

FIELD ANALYTICAL LOG SHEET
GEOCHEMICAL PARAMETERS

Tetra Tech NUS, Inc.

Project Site Name:	NSWC CRANE	Sample ID No.:	16GW0302
Project No.:	9060	Sample Location:	WES-14-03-83
Sampled By:	T. ROJAHN	Duplicate:	☐
Field Analyst:	T. ROJAHN	Blank:	☐

Sulfide (S^{2-}):

Equipment: DR-850 DR-8 90 Range: 0 - 0.70 mg/L Concentration: 0.04 ppm

Program/Module: 610nm 93 Analysis Time: 1327 Filtered: ☐

Notes:

Nitrite (NO_2^--N):

Concentration: 0.007 ppm

Equipment: DR-850 DR-8 90 Range: 0 - 0.350 mg/L Analysis Time: 1306 Filtered: ☐

Program/Module: 62

Standard Solution: ☐ Results: _____ Reagent Blank Correction: ☐

Notes:

Manganese (Mn^{2+}):

Concentration: 2.1 ppm

Equipment: DR-850 DR-8 90 Range: 0 - 20.0 mg/L Analysis Time: 1336 Filtered: ☐

Program/Module: 525nm 41

Notes:

QA/QC Checklist:

All data fields have been completed as necessary: ☑

Correct measurement units are cited in the SAMPLING DATA block: ☑

Values cited in the SAMPLING DATA block are consistent with the Groundwater Sample Log Sheet: ☑

Mulitplication is correct for each *Multiplier* table: ☑

Final calulated concentration is within the appropriate *Range Used* block: ☑

Alkalinity *Relationship* is determined appropriatly as per manufacturer (HACH) instructions: ☑

QA/QC sample (e.g., Std. Additions, etc.) frequency is appropriate as per the project planning documents: ☑

Nitrite Interference treatment was used for Nitrate test if Nitrite was detected: ☐ NA

Title block on ~~each~~ 1st page of form is initialized by person who performed this QA/QC Checklist: ☑

Tetra Tech NUS, Inc.

GROUNDWATER SAMPLE LOG SHEET

Project Site Name: NSWC CRANE, SWMU16
Project No.: N9060 CTO 0279

[] Domestic Well Data
[X] Monitoring Well Data
[] Other Well Type:
[] QA Sample Type:

Sample ID No.: 16GW0402
Sample Location: WES- 14-4-83
Sampled By: FCW
C.O.C. No.: 4814 & 4908
Type of Sample:
[X] Low Concentration
[] High Concentration

SAMPLING DATA:

Date: 10-26-03	Color (Visual)	pH (S. U.)	S.C. (mS/cm)	Temp. (°C)	Turbidity (NTU)	DO (mg/l)	ORP (mV)	Other NA
Time: 0955								
Method: LOW FLOW	CLEAR	3.65	0.735	13.21	0.13	0.54	328.7	---

PURGE DATA:

Date: 10-26-03	Volume	pH	S.C.	Temp. (C)	Turbidity	DO	Salinity	Other
Method: LOW FLOW								
Monitor Reading (ppm): 0								
Well Casing Diameter & Material Type: 2" PVC			See Low Flow Purge Data Sheets					
Total Well Depth (TD): 49.16								
Static Water Level (WL): 30.81								
One Casing Volume(gal/L): 3.0								
Start Purge (hrs): 0955								
End Purge (hrs): 0955								
Total Purge Time (min): 60								
Total Vol. Purged (gal/L): 3.5								

SAMPLE COLLECTION INFORMATION:

Analysis	Preservative	Container Requirements	Collected
Volatiles SW-846 8260B	4°C/HCl	(3) 40ml Vails	Yes
Volatiles SW-846 8015B	4°C/HCl	(3) 40ml Vails	Yes
Explosives SW-846 8330	4°C	(2) L Glass Amber	Yes
Micellaneous Explosives SW-846 8330	4°C	(2) L Glass Amber	Yes
Total Metals SW846 6020/Mercury 7470A	4°C/HNO_3	(1) L HDPE	Yes
Diss. Metals SW846 6020/Mercury 7470A	4°C/HNO_3	(1) L HDPE	—
Nitrate + Nitrite (asN) EPA 353.2 &	4°C/H_2SO_4	(1) L HDPE	Yes
Sulfate & Chloride	4°C	(1) L HDPE	Yes
Methane, Ethane &Ethene	4°C	(2) 40ml Vails	—
Total Organic Carbon	4°C/H_3PO_4	(2) 40ml Vails	—

OBSERVATIONS / NOTES:

Filtered Sample Collected Yes[] No[X]

Circle if Applicable:

MS/MSD

Duplicate ID No.: 16FD10260301

Signature(s): [signature]

Tetra Tech NUS, Inc.

LOW FLOW PURGE DATA SHEET

PROJECT SITE NAME: NSWC CRANE
PROJECT NUMBER: N9060, CTO 0279

WELL ID.: WES-14-4-03
DATE: 10-26-03

Time (Hrs.)	Water Level (Ft. below TOC)	Flow (mL/Min.)	pH (S.U.)	Cond. (mS/cm)	Turb. (NTU)	DO (mg/L)	Temp. (Celsius)	Salinity (%)	ORP (mV)	Comments (Volume & Color)
0855	30.81									START
0905	30.85	220	3.64	0.732	0.88	1.06	13.15	–	379.7	
0915	30.85		3.62	0.736	0.79	0.76	13.12	–	358.6	
0925	30.85		3.59	0.739	0.27	0.65	13.20	–	347.8	
0935	30.85		3.64	0.739	0.0	0.54	13.20	–	340.9	
0942	30.85		3.62	0.741	0.10	0.57	13.24	–	337.6	
0948	30.85		3.62	0.740	0.50	0.56	13.15	–	332.6	
0955	30.85		3.65	0.739	0.13	0.54	13.21	–	328.7	SAMPLE
1225										END

SIGNATURE(S): [illegible]

Tetra Tech NUS, Inc.

GROUNDWATER SAMPLE LOG SHEET

Project Site Name: NSWC CRANE, SWMU16
Project No.: N9060 CTO 0279

[] Domestic Well Data
[X] Monitoring Well Data
[] Other Well Type:
[] QA Sample Type:

Sample ID No.: 1606W0502
Sample Location: WES-14-05-83
Sampled By: M. COCHRAN
C.O.C. No.: 4812 & 4808
Type of Sample:
[X] Low Concentration
[] High Concentration

SAMPLING DATA:

	Color (Visual)	pH (S. U.)	S.C. (mS/cm)	Temp. (°C)	Turbidity (NTU)	DO (mg/l)	ORP (mV)	Other NA
Date: 10-25-03								
Time: 1630								
Method: BLADDER	CLEAR	4.77	.587	13.39	1.96	.28	263	---

PURGE DATA:

	Volume	pH	S.C.	Temp. (C)	Turbidity	DO	Salinity	Other
Date: 10-25-03								
Method: BLADDER								
Monitor Reading (ppm): 0								
Well Casing Diameter & Material Type: 2" PVC			See Low Flow Purge Data Sheets					
Total Well Depth (TD): 53.30								
Static Water Level (WL): 36.74								
One Casing Volume (gal/L): ~~2.5~~ ~~8.50~~ 10.3								
Start Purge (hrs): 1528								
End Purge (hrs): 1630								
Total Purge Time (min): 62								
Total Vol. Purged (gal/L): 12 ~~8.00~~								

SAMPLE COLLECTION INFORMATION:

Analysis	Preservative	Container Requirements	Collected
Volatiles SW-846 8260B	4°C/HCl	(3) 40ml Vails	Yes
Volatiles SW-846 8015B	4°C/HCl	(3) 40ml Vails	Yes
Explosives SW-846 8330	4°C	(2) L Glass Amber	Yes
Micellaneous Explosives SW-846 8330	4°C	(2) L Glass Amber	Yes
Total Metals SW846 6020/Mercury 7470A	4°C/HNO_3	(1) L HDPE	Yes
Diss. Metals SW846 6020/Mercury 7470A	4°C/HNO_3	(1) L HDPE	NO
Nitrate + Nitrite (asN) EPA 353.2 &	4°C/H_2SO_4	(1) L HDPE	Yes
Sulfate & Chloride	4°C	(1) L HDPE	Yes
Methane, Ethane &Ethene	4°C	(2) 40ml Vails	YES
Total Organic Carbon	4°C/H_3PO_4	(2) 40ml Vails	NO

OBSERVATIONS / NOTES:

Filtered Sample Collected Yes[] No[]

MID SCREEN @ ~~38.5~~ 43'

53.30
- 36.74
16.56' PER VOLUME

Circle if Applicable:

MS/MSD

Duplicate ID No.:

Signature(s):

Tetra Tech NUS, Inc.

LOW FLOW PURGE DATA SHEET

PROJECT SITE NAME: NSWC CRANE
PROJECT NUMBER: N9060, CTO 0279

WELL ID.: WES-14-05-83
DATE: 10-25-03

Time (Hrs.)	Water Level (Ft. below TOC)	Flow (mL/Min.)	pH (S.U.)	Cond. (mS/cm)	Turb. (NTU)	DO (mg/L)	Temp. (Celsius)	Salinity (%)	ORP (mV)	Comments (Volume & Color)
1528	36.74	200	—	—	—	—	—	—	—	0 CLEAR
1538	36.85	200	4.58	.579	18.5	1.91	13.63	—	298	2000 CLEAR
1548	36.87	200	4.76	.584	7.09	.73	13.56		275	4000 CLEAR
1558	36.89	200	4.79	.585	4.74	.49	13.49	—	267	6000 CLEAR
1608	36.88	200	4.79	.586	4.78	.42	13.43	—	265	8000 CLEAR
1618	36.89	200	4.78	.587	2.40	.30	13.40	—	264	10000 CLEAR
1623	36.89	200	4.77	.587	1.85	.30	13.40	—	262	11000 CLEAR
1628	36.88	200	4.77	.587	1.96	.28	13.39	—	263	12000 CLEAR

SIGNATURE(S):

Note: Analyte, method, and/or equipment may be deleted from form if not being performed.

Tetra Tech NUS, Inc.

FIELD ANALYTICAL LOG SHEET
GEOCHEMICAL PARAMETERS

Project Site Name: NSWC CRANE
Project No.: 9060
Sampled By: M. COCHRAN
Field Analyst: T. ROJAHN
Field Form Checked as per QA/QC Checklist (initials): TR

Sample ID No.: 16GW0502
Sample Location: WES-14-05-83
Duplicate: ☐
Blank: ☐

SAMPLING DATA:

Date: 10-25-03	Color	pH	S.C.	Temp.	Turbidity	DO	Salinity	ORP (Eh)
Time: 1630	(Visual)	(S.U.)	(mS/cm)	(°C)	(NTU)	(mg/l)	(%)	(+/- mv)
Method: BLADDER	CLEAR	4.77	0.587	13.39	1.96	0.28	NA	

SAMPLE COLLECTION/ANALYSIS INFORMATION:

ORP (Eh) (+/- mv)

Electrode Make & Model: YSI

Reference Electrode (circle one): Silver-Silver Chloride / Calomel / Hydrogen

Dissolved Oxygen:

Equipment: Chemetrics Test Kit

Concentration: 0.25 ppm

Range Used:	Range	Method	Concentration ppm
☑	0 to 1 ppm	K-7510	0.25
☐	1 to 12 ppm	K-7512	

Analysis Time: 1642

Notes:

Alkalinity:

Equipment: Chemetrics Test Kit

Concentration: <10 ppm

Range Used:	Range	Method	Concentration ppm
☑	10 to 100 ppm	K-9810	No Reaction
☑	50 to 500 ppm	K-9815	No Reaction
☐	100 to 1000 ppm	K-9820	

Analysis Time: 1650

Filtered: ☐

Notes:

Carbon Dioxide:

Equipment: Chemetrics Test Kit

Concentration: 150 ppm

Range Used:	Range	Method	Concentration ppm
☐	10 to 100 ppm	K-1910	
☑	100 to 1000 ppm	K-1920	150
☐	250 to 2500 ppm	K-1925	

Analysis Time: 1652

Notes:

Ferrous Iron (Fe^{2+}):

Equipment: DR-850 DR-890 Range: 0 - 3.00 mg/L

Program/Module: 500nm 33

Concentration: 2.91 ppm

Analysis Time: 1703

Filtered: ☐

Notes:

Hydrogen Sulfide (H_2S):

Range: 0 - 5 mg/L

Equipment: HS-C Other:

Exceeded 5.0 mg/L range on color chart: ☐

Concentration: 0.0 ppm

Analysis Time: 1716

Notes:

Note: Analyte, method, and/or equipment may be deleted from form if not being performed.

FIELD ANALYTICAL LOG SHEET
GEOCHEMICAL PARAMETERS

Tetra Tech NUS, Inc.

Project Site Name:	NSWC CRANE	Sample ID No.:	16GW0502
Project No.:	9060	Sample Location:	WES-14-05-83
Sampled By:	MC	Duplicate:	☐
Field Analyst:	TR	Blank:	☐

Sulfide (S^{2-}):

Equipment: DR-850 DR-890 Range: 0 - 0.70 mg/L Concentration: 0.1 ppm

Program/Module: 610nm 93 Analysis Time: 1718 Filtered: ☐

Notes:

Nitrite (NO_2^--N): Concentration: 0.005 ppm

Equipment: DR-850 DR-890 Range: 0 - 0.350 mg/L Analysis Time: 1745 Filtered: ☐

Program/Module: 62

Standard Solution: ☐ Results: _____ Reagent Blank Correction: ☐

Notes:

Manganese (Mn^{2+}): Concentration: 2.7 ppm

Equipment: DR-850 DR-890 Range: 0 - 20.0 mg/L Analysis Time: 1727 Filtered: ☐

Program/Module: 525nm 41

Notes:

QA/QC Checklist:

All data fields have been completed as necessary: ☑

Correct measurement units are cited in the SAMPLING DATA block: ☑

Values cited in the SAMPLING DATA block are consistent with the Groundwater Sample Log Sheet: ☑

Mulitplication is correct for each *Multiplier* table: ☑

Final calulated concentration is within the appropriate *Range Used* block: ☑

Alkalinity *Relationship* is determined appropriatly as per manufacturer (HACH) instructions: ☑

QA/QC sample (e.g., Std. Additions, etc.) frequency is appropriate as per the project planning documents: ☑

Nitrite Interference treatment was used for Nitrate test if Nitrite was detected: ☐ NA

Title block on ~~each~~ 1st page of form is initialized by person who performed this QA/QC Checklist: ☑

Tetra Tech NUS, Inc.

GROUNDWATER SAMPLE LOG SHEET

Project Site Name: NSWC CRANE, SWMU16
Project No.: N9060 CTO 0279

[] Domestic Well Data
[X] Monitoring Well Data
[] Other Well Type:
[] QA Sample Type:

Sample ID No.: 16GWT0102
Sample Location: 16MWT01
Sampled By: FW/TK
C.O.C. No.: 4818
Type of Sample:
[X] Low Concentration
[] High Concentration

SAMPLING DATA:

Date: ~~11-9-03~~ 11-9-03	Color (Visual)	pH (S. U.)	S.C. (mS/cm)	Temp. (°C)	Turbidity (NTU)	DO (mg/l)	ORP (mV)	Other NA
Time: 1035								
Method: PERISTALTIC	Cloudy	5.97	2.322	15.05	85.7	2.59	+177	---

PURGE DATA:

Date: 11-8-03	Volume	pH	S.C.	Temp. (C)	Turbidity	DO	Salinity	Other
Method: PERISTALTIC								
Monitor Reading (ppm): —								
Well Casing Diameter & Material Type: 2" PVC			See Low Flow Purge Data Sheets					
Total Well Depth (TD): 26.65								
Static Water Level (WL): 14.72								
One Casing Volume(gal/L): 1.9								
Start Purge (hrs): 1455								
End Purge (hrs): 1800								
Total Purge Time (min): 185								
Total Vol. Purged (gal/L): 4.2								

SAMPLE COLLECTION INFORMATION:

Analysis	Preservative	Container Requirements	Collected
Volatiles SW-846 8260B	4°C/HCl	11/09 @ 1035 (3) 40ml Vails	Yes
Volatiles SW-846 8015B	4°C/HCl	(3) 40ml Vails	Yes
Explosives SW-846 8330	4°C	(2) L Glass Amber	~~Yes~~
Micellaneous Explosives SW-846 8330	4°C	(2) L Glass Amber	~~Yes~~
Total Metals SW846 6020/Mercury 7470A	4°C/HNO_3	(1) L HDPE	~~Yes~~
Diss. Metals SW846 6020/Mercury 7470A	4°C/HNO_3	(1) L HDPE	—
Nitrate + Nitrite (asN) EPA 353.2 &	4°C/H_2SO_4	(1) L HDPE	~~Yes~~
Sulfate & Chloride	4°C	(1) L HDPE	~~Yes~~
Methane, Ethane &Ethene	4°C	(2) 40ml Vails	—
Total Organic Carbon	4°C/H_3PO_4	(2) 40ml Vails	—

OBSERVATIONS / NOTES:

Filtered Sample Collected Yes[] No[]

Circle if Applicable:

MS/MSD	Duplicate ID No.:	Signature(s):
—	—	[signature]

Tetra Tech NUS, Inc.

LOW FLOW PURGE DATA SHEET

PROJECT SITE NAME: NSWC CRANE
PROJECT NUMBER: N9060, CTO 0279

WELL ID.: 16MW T01
DATE: 11-8-03

Time (Hrs.)	Water Level (Ft. below TOC)	Flow (mL/Min.)	pH (S.U.)	Cond. (mS/cm)	Turb. (NTU)	DO (mg/L)	Temp. (Celsius)	Salinity (%)	ORP (mV)	Comments (Volume & Color)
1455	FO ~~26.65~~ 14.72									START
1508	15.75	75	6.39	2.353	15.6	3.76	14.86	–	89.6	
1516	16.65		6.23	2.320	5.76	2.00	14.61	–	108.6	
1525	17.04		6.19	2.309	4.08	1.62	14.49	–	128.9	
1535	17.40		6.14	2.292	4.59	1.44	14.24	–	140.0	
1545	17.78		6.12	2.286	3.61	1.45	14.16	–	149.1	
1555	18.20		6.09	2.278	2.82	1.73	14.10	–	156.7	
1605	18.67		6.04	2.277	7.49	2.30	14.16	–	167.4	
1615	19.10		5.98	2.267	12.6	2.95	14.11	–	178.6	
1625	19.48		5.95	2.248	20.4	3.91	14.08	–	189.3	
1635	20.00		5.89	2.244	18.4	4.86	14.03	–	202.2	7500
1645	20.53	80	5.78	2.250	13.9	4.96	14.03	–	210.9	
1655	21.02		5.74	2.248	9.92	4.54	13.80	–	217.1	
1708	21.53		5.76	2.251	7.66	3.85	13.68	–	216.6	2640
1720	22.24	85	5.79	2.256	6.15	3.04	13.66	–	209.3	
1730	22.70		5.86	2.261	6.04	2.50	13.64	–	200.1	1870
1740	23.20	100	5.92	2.279	7.66	2.17	14.00	–	189.6	1000
1750	23.95	140	5.99	2.291	9.47	1.63	14.21	–	180.0	2800 4.2 GALLONS
1800	25.20									END PURGE 11/9/03
		11/09/03								
1025	25.56	–	–	–	–	–	–	–	–	START PURGE 11/07/03
1030	25.92	100	6.08	2.256	79.3	2.74	14.62	–	176	500 ml SL Cloudy
1035	26.20	100	5.97	2.322	85.7	2.59	15.05	–	177	1000 ml SL Cloudy
1035										START SAMPLING

TR

SIGNATURE(S): [signature]

PAGE 2 OF 2

Tetra Tech NUS, Inc.

GROUNDWATER SAMPLE LOG SHEET

Project Site Name: NSWC CRANE, SWMU16
Project No.: N9060 CTO 0279

[] Domestic Well Data
[X] Monitoring Well Data
[] Other Well Type:
[] QA Sample Type:

Sample ID No.: 166WT0202
Sample Location: 167WT02
Sampled By: FCW
C.O.C. No.: 4814
Type of Sample:
[X] Low Concentration
[] High Concentration

SAMPLING DATA:

	Color (Visual)	pH (S. U.)	S.C. (mS/cm)	Temp. (°C)	Turbidity (NTU)	DO (mg/l)	ORP (mV)	Other NA
Date: 10-26-03								
Time: 1550								
Method: LOW FLOW	CLEAR	5.76	0.391	14.81	6.7	1.08	273.2	—

PURGE DATA:

	Volume	pH	S.C.	Temp. (C)	Turbidity	DO	Salinity	Other
Date: 10-26-03								
Method: LOW FLOW								
Monitor Reading (ppm): —								
Well Casing Diameter & Material Type: 2" PVC			See Low Flow Purge Data Sheets					
Total Well Depth (TD): 21.08								
Static Water Level (WL): 11.21								
One Casing Volume(gal/L): 1.6								
Start Purge (hrs): 1420								
End Purge (hrs): 1550								
Total Purge Time (min): 90								
Total Vol. Purged (gal/L): 2.4								

SAMPLE COLLECTION INFORMATION:

Analysis	Preservative	Container Requirements	Collected
Volatiles SW-846 8260B	4°C/HCl	(3) 40ml Vails	Yes
Volatiles SW-846 8015B	4°C/HCl	(3) 40ml Vails	Yes
Explosives SW-846 8330	4°C	(2) L Glass Amber	Yes
Micellaneous Explosives SW-846 8330	4°C	(2) L Glass Amber	Yes
Total Metals SW846 6020/Mercury 7470A	4°C/HNO_3	(1) L HDPE	Yes
Diss. Metals SW846 6020/Mercury 7470A	4°C/HNO_3	(1) L HDPE	—
Nitrate + Nitrite (asN) EPA 353.2 &	4°C/H_2SO_4	(1) L HDPE	Yes
Sulfate & Chloride	4°C	(1) L HDPE	Yes
Methane, Ethane &Ethene	4°C	(2) 40ml Vails	—
Total Organic Carbon	4°C/H_3PO_4	(2) 40ml Vails	—

OBSERVATIONS / NOTES:

Filtered Sample Collected Yes[] No[X]

Circle if Applicable:

MS/MSD —

Duplicate ID No.: —

Signature(s):

Tetra Tech NUS, Inc.

LOW FLOW PURGE DATA SHEET

PROJECT SITE NAME: NSWC CRANE
PROJECT NUMBER: N9060, CTO 0279

WELL ID.: 16MWT02
DATE: 10-26-03

Time (Hrs.)	Water Level (Ft. below TOC)	Flow (mL/Min.)	pH (S.U.)	Cond. (mS/cm)	Turb. (NTU)	DO (mg/L)	Temp. (Celsius)	Salinity (%)	ORP (mV)	Comments (Volume & Color)
1420	11.21									START
1430	11.96	100	6.04	0.653	85	1.23	15.17	—	55.8	
1440	12.39		5.95	0.554	27.2	0.98	15.01	—	100.3	
1450	12.84		5.93	0.506	21.9	0.91	14.98	—	158.0	
1500	13.14		5.92	0.481	21.1	1.07	14.66	—	209.0	
1510	13.59		5.91	0.482	20.0	0.93	14.58	—	227.5	
1518	13.90		5.91	0.475	16.0	0.94	14.90	—	240.5	
1526	14.19		5.86	0.433	11.3	1.24	14.77	—	262.6	
1534	14.48		5.78	0.388	10.6	1.47	14.92	—	289.9	
1540	14.70		5.74	0.370	8.4	1.36	14.87	—	293.5	
1545	14.90		5.74	0.372	7.4	1.21	14.91	—	287.9	
1550	15.12		5.76	0.391	6.7	1.08	14.81	—	273.2	SAMPLE
1715										END

SIGNATURE(S): [illegible]

Tetra Tech NUS, Inc.

GROUNDWATER SAMPLE LOG SHEET

Project Site Name: NSWC CRANE, SWMU16
Project No.: N9060 CTO 0279

[] Domestic Well Data
[X] Monitoring Well Data
[] Other Well Type:
[] QA Sample Type:

Sample ID No.: 16GWT0302
Sample Location: 16MWT03
Sampled By: FW
C.O.C. No.: 4818
Type of Sample:
[X] Low Concentration
[] High Concentration

SAMPLING DATA:

	Color (Visual)	pH (S. U.)	S.C. (mS/cm)	Temp. (°C)	Turbidity (NTU)	DO (mg/l)	ORP (mV)	Other NA
Date: 11-9-03								
Time: 1635								
Method: BLADDER	CLEAR	5.46	0.536	12.35	49	1.23	129.9	---

PURGE DATA:

	Volume	pH	S.C.	Temp. (C)	Turbidity	DO	Salinity	Other
Date: 11-9-03								
Method: BLADDER								
Monitor Reading (ppm): —								
Well Casing Diameter & Material Type: 2" PVC			See Low Flow Purge Data Sheets					
Total Well Depth (TD): 38.07								
Static Water Level (WL): 30.40								
One Casing Volume(gal/L): 1.2								
Start Purge (hrs): 1425								
End Purge (hrs): 1635								
Total Purge Time (min): 130								
Total Vol. Purged (gal/L): 2.1								

SAMPLE COLLECTION INFORMATION:

Analysis	Preservative	Container Requirements	Collected
Volatiles SW-846 8260B	4°C/HCl	(3) 40ml Vails	Yes
Volatiles SW-846 8015B	4°C/HCl	(3) 40ml Vails	Yes
Explosives SW-846 8330	4°C	1 ~~(2)~~ L Glass Amber	Yes
Micellaneous Explosives SW-846 8330	4°C	1 ~~(2)~~ L Glass Amber	Yes
Total Metals SW846 6020/Mercury 7470A	4°C/HNO_3	(1) L HDPE	Yes
Diss. Metals SW846 6020/Mercury 7470A	4°C/HNO_3	(1) L HDPE	✓ -F
Nitrate + Nitrite (asN) EPA 353.2 &	4°C/H_2SO_4	(1) L HDPE	Yes
Sulfate & Chloride	4°C	(1) L HDPE	Yes
Methane, Ethane &Ethene	4°C	(2) 40ml Vails	—
Total Organic Carbon	4°C/H_3PO_4	(2) 40ml Vails	—

OBSERVATIONS / NOTES:

Filtered Sample Collected Yes[X] No[]
Intake 2x10 water volume

Circle if Applicable:

MS/MSD	Duplicate ID No.:
—	—

Signature(s): [signature]

Tetra Tech NUS, Inc.

LOW FLOW PURGE DATA SHEET

PROJECT SITE NAME: NSWC CRANE
PROJECT NUMBER: N9060, CTO 0279

WELL ID.: 16MWT03
DATE: 11-9-03

Time (Hrs.)	Water Level (Ft. below TOC)	Flow (mL/Min.)	pH (S.U.)	Cond. (mS/cm)	Turb. (NTU)	DO (mg/L)	Temp. (Celsius)	Salinity (%)	ORP (mV)	Comments (Volume & Color)
1425	30.40									START
1435	30.80	70	5.66	0.533	999	4.02	12.90	–	111.9	
1445	30.86	55	5.53	0.536	999	2.25	12.84	–	119.4	
1455	30.91		5.50	0.539	999	1.95	13.08	–	121.8	
1505	30.94	60	5.50	0.555	556	2.07	13.90	–	127.4	
1515	30.97		5.48	0.542	745	1.63	12.91	–	126.6	
1525	30.98		5.51	0.540	374	1.91	12.89	–	128.8	
1535	31.02		5.50	0.538	197	1.34	12.62	–	127.0	
1545	31.04		5.46	0.536	102	1.48	12.52	–	131.7	
1555	31.06		5.44	0.539	58	1.55	12.70	–	134.6	
1605	31.07		5.44	0.538	54	1.44	12.51	–	133.7	
1615	31.09		5.45	0.537	50	1.38	12.44	–	132.0	
1625	31.10		5.46	0.535	49	1.23	12.26	–	130.4	
1635	31.09		5.46	0.536	49	1.23	12.35	–	129.9	SAMPLE
1800										END

SIGNATURE(S): [illegible]

Tetra Tech NUS, Inc.

GROUNDWATER SAMPLE LOG SHEET

Project Site Name: NSWC CRANE, SWMU16
Project No.: N9060 CTO 0279

[] Domestic Well Data
[X] Monitoring Well Data
[] Other Well Type:
[] QA Sample Type:

Sample ID No.: 16GWT0402
Sample Location: 16MWT04
Sampled By: T. ROJAHN
C.O.C. No.: 4818 & 4819
Type of Sample:
[X] Low Concentration
[] High Concentration

SAMPLING DATA:

Date: 11-8-03	Color (Visual)	pH (S. U.)	S.C. (mS/cm)	Temp. (°C)	Turbidity (NTU)	DO (mg/l)	ORP (mV)	Other NA
Time: 1640								
Method: PERISTALTIC	CLEAR	5.84	0.582	15.73	2.20	0.89	+152	---

PURGE DATA:

Date: 11-8-03	Volume	pH	S.C.	Temp. (C)	Turbidity	DO	Salinity	Other
Method: PERISTALTIC								
Monitor Reading (ppm): —								
Well Casing Diameter & Material								
Type: 2" Ø PVC			See Low Flow Purge Data Sheets					
Total Well Depth (TD): 27.59								
Static Water Level (WL): 14.18								
One Casing Volume(gal/L): 8.3								
Start Purge (hrs): ~~1425~~ 1430								
End Purge (hrs): 1640								
Total Purge Time (min): 130								
Total Vol. Purged (gal/L): 14.8								

SAMPLE COLLECTION INFORMATION:

Analysis	Preservative	Container Requirements	Collected
Volatiles SW-846 8260B	4°C/HCl	(3) 40ml Vails	Yes
Volatiles SW-846 8015B	4°C/HCl	(3) 40ml Vails	Yes
Explosives SW-846 8330	4°C	(2) L Glass Amber	Yes
Micellaneous Explosives SW-846 8330	4°C	(2) L Glass Amber	Yes
Total Metals SW846 6020/Mercury 7470A	4°C/HNO_3	(1) L HDPE	Yes
Diss. Metals SW846 6020/Mercury 7470A	4°C/HNO_3	(1) L HDPE	NO
Nitrate + Nitrite (asN) EPA 353.2 &	4°C/H_2SO_4	(1) L HDPE	Yes
Sulfate & Chloride	4°C	(1) L HDPE	Yes
Methane, Ethane &Ethene	4°C	(2) 40ml Vails	YES
Total Organic Carbon	4°C/H_3PO_4	(2) 40ml Vails	YES

OBSERVATIONS / NOTES:

Filtered Sample Collected Yes[] No[X]

27.59 - 14.18 = 13.41 x 0.163 = 2.2 gal or 8.3 L

Circle if Applicable:

MS/MSD —

Duplicate ID No.: —

Signature(s):

Tetra Tech NUS, Inc.

LOW FLOW PURGE DATA SHEET

PROJECT SITE NAME: NSWC CRANE
PROJECT NUMBER: N9060, CTO 0279

WELL ID.: 16MWT04
DATE: 11-8-03

Time (Hrs.)	Water Level (Ft. below TOC)	Flow (mL/Min.)	pH (S.U.)	Cond. (mS/cm)	Turb. (NTU)	DO (mg/L)	Temp. (Celsius)	Salinity (%)	ORP (mV)	Comments (Volume & Color)
1430	14.18	–	–	–	–	–	–	–	–	Start Purge
1440	14.83	150	4.07	1.285	2.47	1.24	16.53	–	306	1500 CLEAR
1450	14.73	120	5.03	0.712	3.18	1.27	16.31	–	235	2700 CLEAR
1500	14.73	110	5.47	0.619	7.34	1.04	16.30	–	189	3800 CLEAR
1510	14.75	110	5.63	0.517	31.0	0.96	16.27	–	170	4900 CLEAR
1520	14.75	110	5.73	0.480	43.1	0.94	15.97	–	158	6000 WHITE PERCIP.
1530	14.75	110	5.78	0.454	43.9	0.91	15.97	–	156	7100 "
1540	14.77	110	5.82	0.429	23.0	0.94	15.72	–	155	8200 CLEAR
1550	14.77	110	5.86	0.418	13.3	0.89	15.69	–	155	9300 "
1600	14.77	110	5.90	0.409	6.49	0.85	15.91	–	164	10400 "
1610	14.77	110	5.96	0.381	4.17	0.82	15.68	–	155	11500 "
1620	14.77	110	5.92	0.586	3.19	0.87	15.91	–	156	12600 "
1630	14.82	110	5.80	0.581	2.59	0.91	15.89	–	150	13700 "
1640	14.81	110	5.84	0.582	2.20	0.89	15.73	–	152	14800 "
1640										Sample Time

SIGNATURE(S): [signature]

Note: Analyte, method, and/or equipment may be deleted from form if not being performed.

Tetra Tech NUS, Inc.

FIELD ANALYTICAL LOG SHEET
GEOCHEMICAL PARAMETERS

Project Site Name: NSWC CRANE
Project No.: N 9060
Sampled By: T. ROJAHN
Field Analyst: T. ROJAHN / FW
Field Form Checked as per QA/QC Checklist (initials): TR

Sample ID No.: 16GWT0402
Sample Location: 16MWT04
Duplicate: ☐
Blank: ☐

SAMPLING DATA:

	Color (Visual)	pH (S.U.)	S.C. (mS/cm)	Temp. (°C)	Turbidity (NTU)	DO (mg/l)	Salinity (%)	ORP (Eh) (+/- mv)
Date: 11-8-03 Time: 1640 Method: Peristaltic	CLEAR	5.84	0.582	15.73	2.20	0.89	—	+152

SAMPLE COLLECTION/ANALYSIS INFORMATION:

ORP (Eh) (+/- mv)

Electrode Make & Model: YSI

Reference Electrode (circle one): Silver-Silver Chloride / Calomel / Hydrogen

Dissolved Oxygen:

Equipment: Chemetrics Test Kit

Concentration: 2 ppm FW

Range Used:	Range	Method	Concentration ppm
☐	0 to 1 ppm	K-7510	
☑	1 to 12 ppm	K-7512	2

Analysis Time: 1709

Notes:

Alkalinity:

Equipment: Chemetrics Test Kit

Concentration: 75 ppm TR

Range Used:	Range	Method	Concentration ppm
☑	10 to 100 ppm	K-9810	75
☐	50 to 500 ppm	K-9815	
☐	100 to 1000 ppm	K-9820	

Analysis Time: 1716

Filtered: ☐

Notes:

Carbon Dioxide:

Equipment: Chemetrics Test Kit

Concentration: 19 ppm FW

Range Used:	Range	Method	Concentration ppm
☑	10 to 100 ppm	K-1910	19
☑	100 to 1000 ppm	K-1920	
☐	250 to 2500 ppm	K-1925	

Analysis Time: 1720

Notes:

Ferrous Iron (Fe^{2+}):

Equipment: DR-850 DR-850 Range: 0 - 3.00 mg/L

Program/Module: ~~500nm~~ 33

Concentration: ~~5.19~~ 73.30 ppm TR

Analysis Time: 1722

Filtered: ☐

Notes: ~~Dilute 2:1~~ TR ~~1.73 x 3 = 5.19~~ High Limit

Hydrogen Sulfide (H_2S):

Range: 0 - 5 mg/L

Equipment: HS-C Other:

Exceeded 5.0 mg/L range on color chart: ☐

Concentration: 0.0 ppm FW

Analysis Time: 1723

Notes:

Note: Analyte, method, and/or equipment may be deleted from form if not being performed.

FIELD ANALYTICAL LOG SHEET
GEOCHEMICAL PARAMETERS

Tetra Tech NUS, Inc.

Project Site Name:	NSWC CRANE	Sample ID No.:	16GWT0402
Project No.:	N9060	Sample Location:	16MWT04
Sampled By:	T. ROJAHN	Duplicate:	☐
Field Analyst:	T. ROJAHN / FW	Blank:	☐

Sulfide (S^{2-}): TR

Equipment: DR-850 DR-850 Range: 0 - 0.70 mg/L Concentration: 0.00 ppm

Program/Module: 610nm 93 Analysis Time: 1739 Filtered: ☐

Notes:

Nitrite (NO_2^--N): Concentration: 0.004 ppm TR

Equipment: DR-850 DR-890 Range: 0 - 0.350 mg/L Analysis Time: 1723 Filtered: ☐

Program/Module: 62

Standard Solution: ☐ Results: _____ Reagent Blank Correction: ☐

Notes:

Manganese (Mn^{2+}): Concentration: 1.0 ppm TR

Equipment: DR-850 DR-890 Range: 0 - 20.0 mg/L Analysis Time: 1740 Filtered: ☐

Program/Module: 525nm 41

Notes:

QA/QC Checklist:

All data fields have been completed as necessary: ☑

Correct measurement units are cited in the SAMPLING DATA block: ☑

Values cited in the SAMPLING DATA block are consistent with the Groundwater Sample Log Sheet: ☑

Mulitplication is correct for each *Multiplier* table: ☑

Final calulated concentration is within the appropriate *Range Used* block: ☑

Alkalinity *Relationship* is determined appropriatly as per manufacturer (HACH) instructions: ☑

QA/QC sample (e.g., Std. Additions, etc.) frequency is appropriate as per the project planning documents: ☑

Nitrite Interference treatment was used for Nitrate test if Nitrite was detected: ☐ NA

Title block on ~~each~~ 1st page of form is initialized by person who performed this QA/QC Checklist: ☑

Tetra Tech NUS, Inc.

GROUNDWATER SAMPLE LOG SHEET

Project Site Name: NSWC CRANE, SWMU16
Project No.: N9060 CTO 0279

[] Domestic Well Data
[X] Monitoring Well Data
[] Other Well Type:
[] QA Sample Type:

Sample ID No.: 16GWT0502
Sample Location: 16MWT05
Sampled By: T. ROJAHN
C.O.C. No.: 4824
Type of Sample:
[X] Low Concentration
[] High Concentration

SAMPLING DATA:

	Color (Visual)	pH (S. U.)	S.C. (mS/cm)	Temp. (°C)	Turbidity (NTU)	DO (mg/l)	ORP (mV)	Other NA
Date: 11-22-03								
Time: 1617								
Method: SAME	CLEAR	4.38	0.663	15.85	7.72	1.30	+210	---

PURGE DATA:

	Volume	pH	S.C.	Temp. (C)	Turbidity	DO	Salinity	Other
Date: 11-22-03								
Method: BLADDER								
Monitor Reading (ppm): —								
Well Casing Diameter & Material								
Type: 2"Ø PVC			See Low Flow Purge Data Sheets					
Total Well Depth (TD): 41.82								
Static Water Level (WL): 32.42								
One Casing Volume(gal/L): 5.8								
Start Purge (hrs): 1445								
End Purge (hrs): 1615								
Total Purge Time (min): 90								
Total Vol. Purged (gal/L): 10								

SAMPLE COLLECTION INFORMATION:

Analysis	Preservative	Container Requirements	Collected
Volatiles SW-846 8260B	4°C/HCl	(3) 40ml Vails	Yes
Volatiles SW-846 8015B	4°C/HCl	(3) 40ml Vails	Yes
Explosives SW-846 8330	4°C	(2) L Glass Amber	Yes
Micellaneous Explosives SW-846 8330	4°C	(2) L Glass Amber	Yes
Total Metals SW846 6020/Mercury 7470A	4°C/HNO_3	(1) L HDPE	Yes
Diss. Metals SW846 6020/Mercury 7470A	4°C/HNO_3	(1) L HDPE	NO
Nitrate + Nitrite (asN) EPA 353.2 &	4°C/H_2SO_4	(1) L HDPE	Yes
Sulfate & Chloride	4°C	(1) L HDPE	Yes
Methane, Ethane &Ethene	4°C	(2) 40ml Vails	NO
Total Organic Carbon	4°C/H_3PO_4	(2) 40ml Vails	NO

OBSERVATIONS / NOTES:

Filtered Sample Collected Yes[] No[]

MUD SCREEN 36.82

41.82 - 32.42 = 9.4 x 0.163 = 1.5 gal or 5.8 L

Circle if Applicable:

MS/MSD	Duplicate ID No.:
—	—

Signature(s):

Tetra Tech NUS, Inc.

LOW FLOW PURGE DATA SHEET

PROJECT : NSWC CRANE
PROJECT NUMBER: N9060
PROJECT SITE NAME: SWMU 16

WELL ID.: 16MWT0502
DATE: 11-22-03
WEATHER: Partly Cloudy 60°F

Time (Hrs.)	Water Level (Ft. below TOC)	Volume (gal/L)	Flowrate (mL/min)	pH (S.U.)	Cond. (mS/cm)	Turb. (NTU)	DO (mg/L)	Temp. (Celsius)	ORP (mV)	Comments
1445	32.42	—	—	—	—	—	—	—	—	Start Purge
1455	32.90	2.000	200	4.32	0.661	119	1.45	16.07	+ 47	Sl. Cloudy
1505	32.77	3.000	100	4.33	0.665	69.1	1.42	16.09	+ 49	V. Sl. Cloudy
1515	32.75	4.000	100	4.34	0.666	45.0	1.47	16.01	+ 112	CLEAR
1525	32.76	5.000	100	4.36	0.665	34.0	1.45	15.88	+ 154	CLEAR
1535	32.77	6.000	100	4.36	0.664	30.5	1.42	15.82	+ 174	CLEAR
1545	32.77	7.000	100	4.36	0.664	16.1	1.40	15.81	+ 188	CLEAR
1555	32.75	8.000	100	4.37	0.664	12.2	1.33	15.93	+ 205	CLEAR
1605	32.76	9.000	100	4.36	0.665	10.76	1.31	15.90	+ 208	CLEAR
1615	32.76	10.000	100	4.38	0.663	7.72	1.30	15.85	+ 210	CLEAR
1617	—	—	—	—	—	—	—	—	—	Start Sampling

Water Quality Meter (S/N) 99B1412 AA
Control Box Type (S/N) MP10-1550 Micro Purge QED
Turbidity Meter (S/N) 3317-2402

Pump Intake Depth MID SCREEN

SIGNATURE(S): [signature]

Tetra Tech NUS, Inc.

GROUNDWATER SAMPLE LOG SHEET

Project Site Name: NSWC CRANE, SWMU16
Project No.: N9060 CTO 0279

[] Domestic Well Data
[X] Monitoring Well Data
[] Other Well Type:
[] QA Sample Type:

Sample ID No.: 16GWT0603
Sample Location: 16MWT06
Sampled By: FCW
C.O.C. No.: 4818 & 4819
Type of Sample:
[X] Low Concentration
[] High Concentration

SAMPLING DATA:

	Color (Visual)	pH (S. U.)	S.C. (mS/cm)	Temp. (°C)	Turbidity (NTU)	DO (mg/l)	ORP (mV)	Other NA
Date: 11-8-03								
Time: 1308								
Method: PERISTALTIC	CLEAR	6.49	1.216	14.55	1.99	1.67	188.6	--

PURGE DATA:

	Volume	pH	S.C.	Temp. (C)	Turbidity	DO	Salinity	Other
Date: 11-8-03								
Method: PERISTALTIC								
Monitor Reading (ppm): —								
Well Casing Diameter & Material Type: 2" PVC			See Low Flow Purge Data Sheets					
Total Well Depth (TD): 28.30								
Static Water Level (WL): 17.91								
One Casing Volume(gal/L): 1.6								
Start Purge (hrs): 0908								
End Purge (hrs): 1308								
Total Purge Time (min): 240								
Total Vol. Purged (gal/L): 5.1								

SAMPLE COLLECTION INFORMATION:

Analysis	Preservative	Container Requirements	Collected
Volatiles SW-846 8260B	4°C/HCl	(3) 40ml Vails	Yes
Volatiles SW-846 8015B	4°C/HCl	(3) 40ml Vails	Yes
Explosives SW-846 8330	4°C	(2) L Glass Amber	Yes
Micellaneous Explosives SW-846 8330	4°C	(2) L Glass Amber	Yes
Total Metals SW846 6020/Mercury 7470A	4°C/HNO_3	(1) L HDPE	Yes
Diss. Metals SW846 6020/Mercury 7470A	4°C/HNO_3	(1) L HDPE	—
Nitrate + Nitrite (asN) EPA 353.2 &	4°C/H_2SO_4	(1) L HDPE	Yes
Sulfate & Chloride	4°C	(1) L HDPE	Yes
Methane, Ethane &Ethene	4°C	(2) 40ml Vails	✓
Total Organic Carbon	4°C/H_3PO_4	(2) 40ml Vails	NO

OBSERVATIONS / NOTES:

Filtered Sample Collected Yes[] No[X]
Intake @ MID SCREEN

Circle if Applicable:

MS/MSD —

Duplicate ID No.:

Signature(s): FCW

Tetra Tech NUS, Inc.

LOW FLOW PURGE DATA SHEET

PROJECT SITE NAME: NSWC CRANE
PROJECT NUMBER: N9060, CTO 0279

WELL ID.: 16MWT06
DATE: 11-8-03

Time (Hrs.)	Water Level (Ft. below TOC)	Flow (mL/Min.)	pH (S.U.)	Cond. (mS/cm)	Turb. (NTU)	DO (mg/L)	Temp. (Celsius)	Salinity (%)	ORP (mV)	Comments (Volume & Color)
0908	17.91									START
0918	18.60	80	6.79	1.168	385	3.03	12.24	–	204.5	
0928	18.94		6.78	1.180	107	1.95	12.52	–	186.5	
0938	19.21		6.77	1.182	29.2	1.50	12.53	–	169.4	
0948	19.33		6.74	1.182	10.2	1.41	12.64	–	161.5	
0958	19.54		6.68	1.167	5.5	1.42	12.68	–	158.7	
1010	19.80		6.57	1.138	3.60	2.00	12.87	–	162.5	
1020	19.97		6.57	1.113	7.35	2.47	12.35	–	164.6	
1030	20.15		6.59	1.098	13.1	2.91	12.38	–	162.4	
1040	20.27		6.59	1.083	8.66	3.19	12.33	–	160.0	
1050	20.39		6.58	1.096	8.00	3.34	13.02	–	157.1	
1100	20.57		6.55	1.121	7.30	3.32	13.54	–	156.6	
1110	20.75		6.53	1.122	7.14	3.19	13.48	–	158.0	
1120	20.97		6.52	1.127	6.72	3.03	13.38	–	160.4	
1133	21.20		6.50	1.134	9.37	2.89	13.50	–	160.5	
1145	21.38		6.49	1.157	4.90	2.78	14.05	–	160.7	
1155	21.51		6.48	1.170	4.15	2.57	14.34	–	163.0	
1205	21.63		6.48	1.177	3.68	2.45	14.43	–	164.7	
1215	21.83		6.47	1.189	3.26	2.29	14.52	–	169.0	
1225	21.97		6.47	1.191	2.31	2.16	14.57	–	171.6	
1235	22.12		6.48	1.198	2.49	2.04	14.53	–	174.8	
1245	22.25		6.48	1.208	2.30	1.91	14.86	–	176.6	
1258	22.47		6.48	1.218	2.80	1.76	14.62	–	183.9	
1308	22.65	↓	6.49	1.216	1.99	1.67	14.55		188.6	SAMPLE
1445										END

SIGNATURE(S): [illegible]

Note: Analyte, method, and/or equipment may be deleted from form if not being performed.

Tetra Tech NUS, Inc.

FIELD ANALYTICAL LOG SHEET
GEOCHEMICAL PARAMETERS

Project Site Name: NSWC CRANE
Project No.: N9060
Sampled By: F. W
Field Analyst: T. ROJAHN
Field Form Checked as per QA/QC Checklist (initials): TR

Sample ID No.: 16GWT0603
Sample Location: 16MWT06
Duplicate: ☐
Blank: ☐

11/9/03 RAW NA
~~Done~~ TR

SAMPLING DATA:

	Color (Visual)	pH (S.U.)	S.C. (mS/cm)	Temp. (°C)	Turbidity (NTU)	DO (mg/l)	Salinity (%)	ORP (Eh) (+/- mv)
Date: 11-8-03								
Time: 1308								
Method: Peristaltic	CLEAR	6.49	1.216	14.55	1.99	1.67	–	+188.6

SAMPLE COLLECTION/ANALYSIS INFORMATION:

ORP (Eh) (+/- mv)

Electrode Make & Model: YSI

Reference Electrode (circle one): Silver-Silver Chloride / Calomel / Hydrogen

Dissolved Oxygen:

Equipment: Chemetrics Test Kit

Concentration: 1.5 ppm

Range Used:	Range	Method	Concentration ppm
☑	0 to 1 ppm	K-7510	
☑	1 to 12 ppm	K-7512	1.5

Analysis Time: 0915

Notes:

Alkalinity:

Equipment: Chemetrics Test Kit

Concentration: 200 ppm

Range Used:	Range	Method	Concentration ppm
☐	10 to 100 ppm	K-9810	
☑	50 to 500 ppm	K-9815	200
☑	100 to 1000 ppm	K-9820	180

Analysis Time: 0923

Filtered: ☐

Notes:

Carbon Dioxide:

Equipment: Chemetrics Test Kit

Concentration: 40 ppm

Range Used:	Range	Method	Concentration ppm
☑	10 to 100 ppm	K-1910	40
☑	100 to 1000 ppm	K-1920	still Pink
☐	250 to 2500 ppm	K-1925	

Analysis Time: 0935

Notes:

Ferrous Iron (Fe^{2+}):

Equipment: DR-850 DR-850 Range: 0 - 3.00 mg/L
Program/Module: 500nm 33

Concentration: 0.03 ppm

Analysis Time: 0945

Filtered: ☐

Notes:

Hydrogen Sulfide (H_2S): Range: 0 - 5 mg/L

Equipment: HS-C Other:

Exceeded 5.0 mg/L range on color chart: ☐

Concentration: 6.0 ppm

Analysis Time: 0945

Notes:

Note: Analyte, method, and/or equipment may be deleted from form if not being performed.

FIELD ANALYTICAL LOG SHEET
GEOCHEMICAL PARAMETERS

Tetra Tech NUS, Inc.

Project Site Name:	NSWC CRANE	Sample ID No.:	16GWT0603
Project No.:	N9060	Sample Location:	16MWT06
Sampled By:	F. W	Duplicate:	☐
Field Analyst:	T.R	Blank:	☐

Sulfide (S^{2-}):

Equipment: DR-850 DR-890 Range: 0 - 0.70 mg/L Concentration: 0.07 ppm

Program/Module: 610nm 93 Analysis Time: 0956 Filtered: ☐

Notes:

Nitrite (NO_2^--N):

Concentration: 0.016 ppm

Equipment: DR-850 DR-850 Range: 0 - 0.350 mg/L Analysis Time: 0925 Filtered: ☐

Program/Module: 62

Standard Solution: ☐ Results: _____ Reagent Blank Correction: ☐

Notes:

Manganese (Mn^{2+}):

Concentration: 3.8 ppm

Equipment: DR-850 DR-850 Range: 0 - 20.0 mg/L Analysis Time: 0958 Filtered: ☐

Program/Module: 525nm 41

Notes:

QA/QC Checklist:

All data fields have been completed as necessary: ☑

Correct measurement units are cited in the SAMPLING DATA block: ☑

Values cited in the SAMPLING DATA block are consistent with the Groundwater Sample Log Sheet: ☑

Mulitplication is correct for each *Multiplier* table: ☑

Final calulated concentration is within the appropriate *Range Used* block: ☑

Alkalinity *Relationship* is determined appropriatly as per manufacturer (HACH) instructions: ☑

QA/QC sample (e.g., Std. Additions, etc.) frequency is appropriate as per the project planning documents: ☑

Nitrite Interference treatment was used for Nitrate test if Nitrite was detected: ☐ NA

Title block on ~~each~~ 1st page of form is initialized by person who performed this QA/QC Checklist: ☑

Tetra Tech NUS, Inc.

GROUNDWATER SAMPLE LOG SHEET

Project Site Name: NSWC CRANE, SWMU16
Project No.: N9060 CTO 0279

[] Domestic Well Data
[X] Monitoring Well Data
[] Other Well Type:
[] QA Sample Type:

Sample ID No.: 16GWT0801
Sample Location: 16MWT08
Sampled By: TR
C.O.C. No.: 4833
Type of Sample:
[X] Low Concentration
[] High Concentration

SAMPLING DATA:

	Color (Visual)	pH (S. U.)	S.C. (mS/cm)	Temp. (°C)	Turbidity (NTU)	DO (mg/l)	ORP (mV)	Other NA
Date: 12-5-03								
Time: 1030								
Method: Dis. Bailer	GREY	7.16	0.257	11.90	>1000	2.13	64.3	---

PURGE DATA:

	Volume	pH	S.C.	Temp. (C)	Turbidity	DO	Salinity	Other
Date: 12-5-03								
Method: Bailer (Dis.)								
Monitor Reading (ppm): –								
Well Casing Diameter & Material								
Type: 2" Ø PVC			See Low Flow Purge Data Sheets					
Total Well Depth (TD): 97.6								
Static Water Level (WL): 91.55								
One Casing Volume(gal/L): 3.73								
Start Purge (hrs): 1320								
End Purge (hrs): 1330								
Total Purge Time (min): 10								
Total Vol. Purged (gal/L) 9								

SAMPLE COLLECTION INFORMATION:

Analysis	Preservative	Container Requirements	Collected
Volatiles SW-846 8260B	4°C/HCl	12/6/03 (3) 40ml Vails	Yes
Volatiles SW-846 8015B	4°C/HCl	12/6/03 (3) 40ml Vails	Yes
Explosives SW-846 8330	4°C	12/6/03 (1) L Glass Amber *Min Vol.	Yes
Micellaneous Explosives SW-846 8330	4°C	(2) L Glass Amber	~~Yes~~
Total Metals SW846 6020/Mercury 7470A	4°C/HNO_3	12/6/03 (1) L HDPE *Min Vol	Yes
Diss. Metals SW846 6020/Mercury 7470A	4°C/HNO_3	(1) L HDPE	NO
Nitrate + Nitrite (asN) EPA 353.2 &	4°C/H_2SO_4	(1) L HDPE	~~Yes~~
Sulfate & Chloride	4°C	(1) L HDPE	~~Yes~~
Methane, Ethane &Ethene	4°C	(2) 40ml Vails	NO
Total Organic Carbon	4°C/H_3PO_4	(2) 40ml Vails	NO

OBSERVATIONS / NOTES:

Filtered Sample Collected Yes[] No[]

12/6/03 Hand bailed until dry ~ 9 L.
Well dry on 12/7/03!

97.60
91.55
6.05 (.163) = .986 gal = 3.73 L

Circle if Applicable:

MS/MSD	Duplicate ID No.:
—	—

Signature(s): Terry Spal

Tetra Tech NUS, Inc.

LOW FLOW PURGE DATA SHEET

PROJECT : NSWC CRANE
PROJECT NUMBER: N9060
PROJECT SITE NAME: SWMU 16

WELL ID.: 16GWT0801
DATE: 12-5-03
WEATHER:

Time (Hrs)	Water Level (Ft. below TOC)	Volume (gal/L)	Flowrate (mL/min)	pH (S.U.)	Cond. (mS/cm)	Turb. (NTU)	DO (mg/L)	Temp. (Celsius)	ORP (mV)	Comments
1320	91.55	–	–	–	–	–	–	–	–	Start Purge
1326	–	4.0	NA	6.84	0.260	>1000	3.87	10.09	71.2	GREY
1330	DRY	9.0	NA	7.16	0.257	>1000	2.13	11.90	64.3	END PURGE

Water Quality Meter (S/N) 98F0478 AB
Control Box Type (S/N) NA
Turbidity Meter (S/N) 3317-2402

Pump Intake Depth NA (Bailer well)

SIGNATURE(S): [signature]

PAGE 2 OF 2

Tetra Tech NUS, Inc.

GROUNDWATER SAMPLE LOG SHEET

Project Site Name: NSWC CRANE, SWMU16
Project No.: N9060 CTO 0279

[] Domestic Well Data
[X] Monitoring Well Data
[] Other Well Type:
[] QA Sample Type:

Sample ID No.: 16GWT0901
Sample Location: 16GWT09
Sampled By: Goerdt
C.O.C. No.: 4824
Type of Sample:
[X] Low Concentration
[] High Concentration

SAMPLING DATA:

	Color (Visual)	pH (S. U.)	S.C. (mS/cm)	Temp. (°C)	Turbidity (NTU)	DO (mg/l)	ORP (mV)	Other NA
Date: 11-22-03								
Time: 1614								
Method: Peristaltic	Clear	4.16	0.502	16.56	4.82	2.33	329.8	---

PURGE DATA:

	Volume	pH	S.C.	Temp. (C)	Turbidity	DO	Salinity	Other
Date: 11-22-03								
Method: Peristaltic								
Monitor Reading (ppm): —								
Well Casing Diameter & Material Type: 2" Ø PVC			See Low Flow Purge Data Sheets					
Total Well Depth (TD): 27.65								
Static Water Level (WL): 13.32								
One Casing Volume(gal/L): 8.84								
Start Purge (hrs): 1422								
End Purge (hrs): 1612								
Total Purge Time (min): 110								
Total Vol. Purged (gal/L) 10.6								

SAMPLE COLLECTION INFORMATION:

Analysis	Preservative	Container Requirements	Collected
Volatiles SW-846 8260B	4°C/HCl	(3) 40ml Vails	Yes
Volatiles SW-846 8015B	4°C/HCl	(3) 40ml Vails	Yes
Explosives SW-846 8330	4°C	(2) L Glass Amber	Yes
Micellaneous Explosives SW-846 8330	4°C	(2) L Glass Amber	Yes
Total Metals SW846 6020/Mercury 7470A	4°C/HNO_3	(1) L HDPE	Yes
Diss. Metals SW846 6020/Mercury 7470A	4°C/HNO_3	(1) L HDPE	No
Nitrate + Nitrite (asN) EPA 353.2 &	4°C/H_2SO_4	(1) L HDPE	Yes
Sulfate & Chloride	4°C	(1) L HDPE	Yes
Methane, Ethane &Ethene	4°C	(2) 40ml Vails	No
Total Organic Carbon	4°C/H_3PO_4	(2) 40ml Vails	No

OBSERVATIONS / NOTES:

Filtered Sample Collected Yes[] No[X]

27.65
13.32
14.33 (0.163) = 2.34 gal = 8.84 L

Circle if Applicable:

MS/MSD	Duplicate ID No.:	Signature(s):
—	—	

Tetra Tech NUS, Inc.

LOW FLOW PURGE DATA SHEET

PROJECT : NSWC CRANE
PROJECT NUMBER: N9060
PROJECT SITE NAME: SWMU 16

WELL ID.: 16GWT09
DATE: 11-22-03
WEATHER: 65° Partly Cloudy

Time (Hrs.)	Water Level (Ft. below TOC)	Volume (gal/L)	Flowrate (mL/min)	pH (S.U.)	Cond. (mS/cm)	Turb. (NTU)	DO (mg/L)	Temp. (Celsius)	ORP (mV)	Comments
1422	13.32	–	–	–	–	–	–	–	–	Start purge
1432	13.81	1.0	1000	3.44	1.308	50.6	1.64	17.14	369.4	v. slight cloud
1442	13.86	1.9	900	3.42	1.267	36.8	1.47	17.31	386.0	"
1452	13.91	2.8	900	3.40	1.207	27.0	1.42	17.22	397.7	"
1502	13.94	3.7	900	3.42	1.129	30.3	1.81	17.20	408.3	"
1512	13.97	4.6	900	3.58	0.920	24.3	2.16	16.98	387.1	"
1522	13.99	5.6	1000	3.80	0.743	17.1	2.36	16.89	362.0	clear
1532	14.00	6.6	1000	3.93	0.648	9.99	2.43	16.71	349.2	"
1542	13.99	7.6	1000	3.97	0.594	7.49	2.41	16.84	346.0	"
1552	14.01	8.6	1000	4.04	0.550	5.65	2.35	16.90	336.0	"
~~1552~~	14.01	9.6	~~1000~~ 500	4.06	0.535	5.78	2.34	17.03	333.3	"
1602	14.01	9.6	500	4.08	0.512	4.66	2.34	16.75	330.1	"
1607	14.00	10.1	500	4.09	0.504	3.85	2.31	16.80	330.2	"
1612	14.00	10.6	500	4.10	0.502	4.82	2.33	16.56	329.8	Stop purge

Water Quality Meter (S/N) 98F0478 AB
Control Box Type (S/N) NA
Turbidity Meter (S/N) 0920 4298

Pump Intake Depth ~ MID SCREEN

SIGNATURE(S): [signature]

Tetra Tech NUS, Inc.

GROUNDWATER SAMPLE LOG SHEET

Project Site Name: NSWC CRANE, SWMU16
Project No.: N9060 CTO 0279

[] Domestic Well Data
[X] Monitoring Well Data
[] Other Well Type:
[] QA Sample Type:

Sample ID No.: 16GWT1001
Sample Location: 16MWT10
Sampled By: Goerdt
C.O.C. No.: 4822 & 4826
Type of Sample:
[X] Low Concentration
[] High Concentration

SAMPLING DATA:

	Color (Visual)	pH (S. U.)	S.C. (mS/cm)	Temp. (°C)	Turbidity (NTU)	DO (mg/l)	ORP (mV)	Other NA
Date: 11-21-03								
Time: 1003								
Method: Peristaltic	Clear	3.72	1.178	14.77	6.56	1.28	328.9	---

PURGE DATA:

	Volume	pH	S.C.	Temp. (C)	Turbidity	DO	Salinity	Other
Date: 11-21-03								
Method: Peristaltic								
Monitor Reading (ppm): —								
Well Casing Diameter & Material								
Type: 2" Ø			See Low Flow Purge Data Sheets					
Total Well Depth (TD): 27.15								
Static Water Level (WL): 22.30								
One Casing Volume(gal/L): 2.99								
Start Purge (hrs): 0842								
End Purge (hrs): 0957								
Total Purge Time (min): 75								
Total Vol. Purged (gal/L): 7.5								

SAMPLE COLLECTION INFORMATION:

Analysis	Preservative	Container Requirements	Collected
Volatiles SW-846 8260B	4°C/HCl	(3) 40ml Vails	Yes
Volatiles SW-846 8015B	4°C/HCl	(3) 40ml Vails	Yes
Explosives SW-846 8330	4°C	(2) L Glass Amber	Yes
Micellaneous Explosives SW-846 8330	4°C	(2) L Glass Amber	Yes
Total Metals SW846 6020/Mercury 7470A	4°C/HNO_3	(1) L HDPE	Yes
Diss. Metals SW846 6020/Mercury 7470A	4°C/HNO_3	(1) L HDPE	No
Nitrate + Nitrite (asN) EPA 353.2 &	4°C/H_2SO_4	(1) L HDPE	Yes
Sulfate & Chloride	4°C	(1) L HDPE	Yes
Methane, Ethane &Ethene	4°C	(2) 40ml Vails	Yes
Total Organic Carbon	4°C/H_3PO_4	(2) 40ml Vails	No

OBSERVATIONS / NOTES:

Filtered Sample Collected Yes[] No[X]

27.15
22.30
4.85(0.163) = .791 gal = 2.99 L

Circle if Applicable:		Signature(s):
MS/MSD —	Duplicate ID No.: —	

Tetra Tech NUS, Inc.

LOW FLOW PURGE DATA SHEET

PROJECT : NSWC CRANE
PROJECT NUMBER: N9060
PROJECT SITE NAME: SWMU 16

WELL ID.: 16GWT10
DATE: 11-21-03
WEATHER: Partly Cloudy 55° F

Time (Hrs.)	Water Level (Ft. below TOC)	Volume (gal/L)	Flowrate (mL/min)	pH (S.U.)	Cond. (mS/cm)	Turb. (NTU)	DO (mg/L)	Temp. (Celsius)	ORP (mV)	Comments
0842	22.30		—	—	—	—	—	—	—	Start purge
0852	22.48	100	100	3.95	1.517	70.5	1.04	13.90	291.7	Cloudy
0902	22.51	2.0	100	3.92	1.409	46.3	0.94	14.17	300.2	Clear
0912	22.53	3.0	100	3.86	1.315	37.5	0.80	14.24	317.5	Clear
0922	22.54	4.0	100	3.83	1.263	26.2	0.91	14.33	323.0	"
0932	22.57	5.0	100	3.79	1.208	14.5	1.02	14.52	331.5	"
0942	22.59	6.0	100	3.75	1.196	8.44	1.18	14.73	332.1	"
0952	22.59	7.0 ~~6.5~~	100	3.73	1.188	6.62	1.25	14.78	329.2	"
0957	22.59	7.5	100	3.72	1.178	5.56	1.28	14.77	328.9	" Stop purge

Water Quality Meter (S/N) 98F0478 AB
Control Box Type (S/N) NA
Turbidity Meter (S/N) 0920 4298

Pump Intake Depth ≈25'

SIGNATURE(S): [illegible]

Note: Analyte, method, and/or equipment may be deleted from form if not being performed.

Tetra Tech NUS, Inc.

FIELD ANALYTICAL LOG SHEET
GEOCHEMICAL PARAMETERS

Project Site Name: NSWC CRANE
Project No.: 9060
Sampled By: JGoerdt
Field Analyst: T. Rojahn
Field Form Checked as per QA/QC Checklist (initials): TLR

Sample ID No.: 16GWT10 01
Sample Location: 16MWT10
Duplicate: ☐
Blank: ☐

SAMPLING DATA:

	Color (Visual)	pH (S.U.)	S.C. (mS/cm)	Temp. (°C)	Turbidity (NTU)	DO (mg/l)	Salinity (%)	ORP (Eh) (+/- mv)
Date: 11-21-03 Time: 1003 Method: Peristaltic	CLEAR	3.72	1.178	14.77	5.56	1.28	~~328.9~~ 74	328.9

SAMPLE COLLECTION/ANALYSIS INFORMATION:

ORP (Eh) (+/- mv)

Electrode Make & Model: YSI

Reference Electrode (circle one): Silver-Silver Chloride / Calomel / Hydrogen

Dissolved Oxygen:

Equipment: Chemetrics Test Kit

Concentration: 0.35 ppm

Range Used:	Range	Method	Concentration ppm
☑	0 to 1 ppm	K-7510	0.35
☑	1 to 12 ppm	K-7512	

Analysis Time: 1034

Notes:

Alkalinity:

Equipment: Chemetrics Test Kit

Concentration: <10 ppm

Range Used:	Range	Method	Concentration ppm
☑	10 to 100 ppm	K-9810	
☑	50 to 500 ppm	K-9815	
☐	100 to 1000 ppm	K-9820	

Analysis Time: 1042

Filtered: ☐

Notes:

Carbon Dioxide:

Equipment: Chemetrics Test Kit

Concentration: 280 ppm

Range Used:	Range	Method	Concentration ppm
☐	10 to 100 ppm	K-1910	
☑	100 to 1000 ppm	K-1920	280
☐	250 to 2500 ppm	K-1925	

Analysis Time: 1050

Notes:

Ferrous Iron (Fe^{2+}):

Equipment: DR-850 DR-8 __ Range: 0 - 3.00 mg/L

Program/Module: 500nm 33

Concentration: >3.00 ppm

Analysis Time: 1057

Notes: High Limit

Filtered: ☐

Hydrogen Sulfide (H_2S): Range: 0 - 5 mg/L

Equipment: HS-C Other: _____

Exceeded 5.0 mg/L range on color chart: ☐

Concentration: 0.0 ppm

Analysis Time: 1102

Notes:

Note: Analyte, method, and/or equipment may be deleted from form if not being performed.

FIELD ANALYTICAL LOG SHEET
GEOCHEMICAL PARAMETERS

Tetra Tech NUS, Inc.

Project Site Name:	NSWC CRANE	Sample ID No.:	16GWT1001
Project No.:	9060	Sample Location:	16MWT10
Sampled By:	JG	Duplicate:	☐
Field Analyst:	TK	Blank:	☐

Sulfide (S^{2-}):

Equipment: DR-850 DR-850 Range: 0 - 0.70 mg/L Concentration: 0.02 ppm

Program/Module: 610nm 93 Analysis Time: 1111 Filtered: ☐

Notes:

Nitrite (NO_2^--N):

Concentration: 0.002 ppm

Equipment: DR-850 DR-850 Range: 0 - 0.350 mg/L Analysis Time: 1044 Filtered: ☐

Program/Module: 62

Standard Solution: ☐ Results: _____ Reagent Blank Correction: ☐

Notes:

Manganese (Mn^{2+}):

Concentration: ≥22 ppm

Equipment: DR-850 DR-850 Range: 0 - 20.0 mg/L Analysis Time: 1117 Filtered: ☐

Program/Module: 525nm 41

Notes:

QA/QC Checklist:

All data fields have been completed as necessary: ☑

Correct measurement units are cited in the SAMPLING DATA block: ☑

Values cited in the SAMPLING DATA block are consistent with the Groundwater Sample Log Sheet: ☑

Mulitplication is correct for each *Multiplier* table: ☑

Final calulated concentration is within the appropriate *Range Used* block: ☑

Alkalinity *Relationship* is determined appropriatly as per manufacturer (HACH) instructions: ☑

QA/QC sample (e.g., Std. Additions, etc.) frequency is appropriate as per the project planning documents: ☑

Nitrite Interference treatment was used for Nitrate test if Nitrite was detected: ☐ NA

Title block on 1st each page of form is initialized by person who performed this QA/QC Checklist: ☑

Tetra Tech NUS, Inc.

GROUNDWATER SAMPLE LOG SHEET

Project Site Name: NSWC CRANE, SWMU16
Project No.: N9060 CTO 0279

[] Domestic Well Data
[X] Monitoring Well Data
[] Other Well Type:
[] QA Sample Type:

Sample ID No.: 16 GMWT1101 (FC)
Sample Location: SWMU 16
Sampled By: SG
C.O.C. No.: 4823
Type of Sample:
[X] Low Concentration
[] High Concentration

SAMPLING DATA:

	Color (Visual)	pH (S. U.)	S.C. (mS/cm)	Temp. (°C)	Turbidity (NTU)	DO (mg/l)	ORP (mV)	Other NA
Date: 12/6/03								
Time: 1330								
Method: Bailer (DIS.)	GREY	7.35	0.254	7.29	650	4.51	188.0	--

PURGE DATA:

	Volume	pH	S.C.	Temp. (C)	Turbidity	DO	Salinity	Other
Date: 12/5/03								
Method: Bladderpump/Bailer								
Monitor Reading (ppm): —								
Well Casing Diameter & Material Type: 2" PVC			See Low Flow Purge Data Sheets					
Total Well Depth (TD): 98.65								
Static Water Level (WL): 96.57								
One Casing Volume(gal/L): 2.08								
Start Purge (hrs): 1515								
End Purge (hrs): 1600								
Total Purge Time (min): 45								
Total Vol. Purged (gal/L): 1.25g								

SAMPLE COLLECTION INFORMATION:

Analysis	Preservative	Container Requirements	Collected
Volatiles SW-846 8260B	4°C/HCl	12/6 (3) 40ml Vails	Yes
Volatiles SW-846 8015B	4°C/HCl	12/6 (3) 40ml Vails	Yes
Explosives SW-846 8330	4°C	12/6 * (1) L Glass Amber	Yes
Micellaneous Explosives SW-846 8330	4°C	12/7 * (1) L Glass Amber @ 1000 Hrs	Yes
Total Metals SW846 6020/Mercury 7470A	4°C/HNO_3	12/6 (1) L HDPE	Yes
Diss. Metals SW846 6020/Mercury 7470A	4°C/HNO_3	12/7 (1) L HDPE @ 1000 Hrs	YES -F
Nitrate + Nitrite (asN) EPA 353.2 &	4°C/H_2SO_4	(1) L HDPE	~~Yes~~ NO
Sulfate & Chloride	4°C	(1) L HDPE	~~Yes~~ NO
Methane, Ethane &Ethene	4°C	(2) 40ml Vails	NO
Total Organic Carbon	4°C/H_3PO_4	(2) 40ml Vails	NO

OBSERVATIONS / NOTES:

Filtered Sample Collected Yes [redacted] (FA) * Min. Vol.

Dried out on 12/5 @ 1600 Hrs
Started sampling on 12/6 @ 1330 Hrs.
Finished Sampling on 12/7 @ 1000 Hrs.

Circle if Applicable:

MS/MSD	Duplicate ID No.:
—	—

Signature(s):

Tetra Tech NUS, Inc.

LOW FLOW PURGE DATA SHEET

PROJECT : NSWC CRANE
PROJECT NUMBER: N9060
PROJECT SITE NAME: 1B SWMU

WELL ID.: 1B MWT 11
DATE: 12/5/03
WEATHER: Rain, SNOW, 33°F

Time (Hrs.)	Water Level (Ft. below TOC)	Volume (gal/L)	Flowrate (mL/min)	pH (S.U.)	Cond. (mS/cm)	Turb. (NTU)	DO (mg/L)	Temp. (Celsius)	ORP (mV)	Comments
1515	96.40	0	150	7.41	0.252	1000	6.74	7.15	157.0	GREY CLOUDY
1525	97.20		100	7.35	0.256	650	4.51	7.29	188.0	
1535	—	0.75								DRY.
										Pulled bladder
1600	DRY	.50								pump + dried out
										with bailer.
	Total	1.25g								2 bailers.

Water Quality Meter (S/N) 028041
Control Box Type (S/N) #402 (meio)
Turbidity Meter (S/N) 3106 - T402

BLADER Pump Intake Depth ≈ 98.0' / Bailed Dry

SIGNATURE(S): Scott Grier

Tetra Tech NUS, Inc.

GROUNDWATER SAMPLE LOG SHEET

Project Site Name: NSWC CRANE, SWMU ~~13~~ 16 QS
Project No.: N9060 CTO 0279

[] Domestic Well Data
[X] Monitoring Well Data
[] Other Well Type:
[] QA Sample Type:

Sample ID No.: 16GW1201 QS
Sample Location: 16GW12
Sampled By: Goerdt
C.O.C. No.: 4822 & 4826
Type of Sample:
[X] Low Concentration
[] High Concentration

SAMPLING DATA:

	Color (Visual)	pH (S. U.)	S.C. (mS/cm)	Temp. (°C)	Turbidity (NTU)	DO (mg/l)	ORP (mV)	Other NA
Date: 11-21-03								
Time: 1316								
Method: Peristaltic	Clear	4.27	0.795	16.04	4.11	0.64	306.8	--

PURGE DATA:

	Volume	pH	S.C.	Temp. (C)	Turbidity	DO	Salinity	Other
Date: 11-21-03								
Method: PERistaltic								
Monitor Reading (ppm): -								
Well Casing Diameter & Material								
Type: 2" Ø PVC			See Low Flow Purge Data Sheets					
Total Well Depth (TD): 28.57								
Static Water Level (WL): 21.66								
One Casing Volume(gal/L): 4.28								
Start Purge (hrs): 1148								
End Purge (hrs): 1313								
Total Purge Time (min): 85								
Total Vol. Purged (gal/L): 9.5								

SAMPLE COLLECTION INFORMATION:

Analysis	Preservative	Container Requirements	Collected
Explosives SW-846 8330	4°C	(2) L Glass Amber	Yes
Micellaneous Explosives SW-846 8330	4°C	(2) L Glass Amber	Yes
Total Metals SW846 6020/Mercury 7470A	4°C/HNO_3	(1) L HDPE	Yes
Diss. Metals SW846 6020/Mercury 7470A	4°C/HNO_3	(1) L HDPE	No
Nitrate + Nitrite (asN) EPA 353.2 & Ammonia (asN) EPA 350.1	4°C/H_2SO_4	(1) L HDPE	Yes
Total Organic Carbon	4°C/H_3PO_4	(2) 40ml Vails	NO
Methane, Ethane, Ethene	4°C	(2) 40ml Vials	Yes
Sulfate + Chloride	4°C	(1) L HDPE	Yes
Volatiles SW846 8260B	4°C/HCl	(3) 40ml Vials	Yes
Volatiles SW846 8015B	4°C/HCl	(3) 40ml Vials	Yes

OBSERVATIONS / NOTES:

Filtered Sample Collected Yes[] No[X]

28.57
21.66
6.91 gal (.163) = 1.13 = 4.28 L

Circle if Applicable:

MS/MSD	Duplicate ID No.:	Signature(s):
NO	16FD11210301	[signature]

Tetra Tech NUS, Inc.

LOW FLOW PURGE DATA SHEET

PROJECT : NSWC CRANE
PROJECT NUMBER: N9060
PROJECT SITE NAME: SWMU 16

WELL ID.: 16GW12
DATE: 11-21-03
WEATHER: Partly Cloudy 60°

Time (Hrs.)	Water Level (Ft. below TOC)	Volume (gal/L)	Flowrate (mL/min)	pH (S.U.)	Cond. (mS/cm)	Turb. (NTU)	DO (mg/L)	Temp. (Celsius)	ORP (mV)	Comments
1148	21.66	—	—	—	—	—	—	—	—	Start purge
1158	22.02	1.1	110	4.30	0.822	11.8	0.86	15.18	312.2	clear
1208	22.21	2.2	110	4.34	0.816	11.6	0.75	15.18	301.8	"
1218	22.32	3.2	100	4.27	0.831	11.4	0.69	15.43	317.7	"
1228	22.35	4.2	100	4.28	0.850	10.37	0.69	16.03	313.5	"
1238	22.22	5.2	100	4.34	0.889	10.01	0.80	17.30	295.5	"
1248	22.14	6.2	100	4.38	0.862	7.74	0.81	17.86	287.7	"
1258	22.30	7.4	120	4.33	0.801	6.38	0.64	15.71	302.9	"
1308	22.34	8.6	120	4.27	0.799	5.65	0.64	15.83	307.8	"
1313	22.34	9.5	90	4.27	0.795	4.11	0.64	16.04	306.8	Stop purge

Water Quality Meter (S/N) 98F0478AB
Control Box Type (S/N) N/A
Turbidity Meter (S/N) 0920 4298

Pump Intake Depth ≈25'

SIGNATURE(S): [illegible]

Note: Analyte, method, and/or equipment may be deleted from form if not being performed.

Tetra Tech NUS, Inc.

FIELD ANALYTICAL LOG SHEET
GEOCHEMICAL PARAMETERS

Project Site Name: NSWC CRANE
Project No.: 9060
Sampled By: JGoebel
Field Analyst: TKojahn
Field Form Checked as per QA/QC Checklist (initials): TK

Sample ID No.: 16GWT1201
Sample Location: 16MWT12
Duplicate: ☐
Blank: ☐

SAMPLING DATA:

	Color (Visual)	pH (S.U.)	S.C. (mS/cm)	Temp. (°C)	Turbidity (NTU)	DO (mg/l)	Salinity (%)	ORP (Eh) (+/- mv)
Date: 11-21-03								
Time: 1316								
Method: Peristaltic	CLEAR	4.27	0.745	16.04	4.11	0.64	—	+306.8

SAMPLE COLLECTION/ANALYSIS INFORMATION:

ORP (Eh) (+/- mv)

Electrode Make & Model: YSI

Reference Electrode (circle one): Silver-Silver Chloride / Calomel / Hydrogen

Dissolved Oxygen:

Equipment: Chemetrics Test Kit

Concentration: 0.1 ppm

Range Used:	Range	Method	Concentration ppm
☑	0 to 1 ppm	K-7510	0.1
☐	1 to 12 ppm	K-7512	

Analysis Time: 1410

Notes:

Alkalinity:

Equipment: Chemetrics Test Kit

Concentration: <10 ppm

Range Used:	Range	Method	Concentration ppm
☑	10 to 100 ppm	K-9810	<10
☐	50 to 500 ppm	K-9815	
☐	100 to 1000 ppm	K-9820	

Analysis Time: 1418

Filtered: ☐

Notes: Pink @ start

Carbon Dioxide:

Equipment: Chemetrics Test Kit

Concentration: 260 ppm

Range Used:	Range	Method	Concentration ppm
☐	10 to 100 ppm	K-1910	
☑	100 to 1000 ppm	K-1920	260
☐	250 to 2500 ppm	K-1925	

Analysis Time: 1424

Notes:

Ferrous Iron (Fe^{2+}):

Equipment: DR-850 DR-890 Range: 0 - 3.00 mg/L

Program/Module: 500nm 33

Concentration: >3.30 ppm

Analysis Time: 1431

Filtered: ☐

Notes:

Hydrogen Sulfide (H_2S):

Range: 0 - 5 mg/L

Equipment: HS-C Other:

Exceeded 5.0 mg/L range on color chart: ☐

Concentration: 0.0 ppm

Analysis Time: 1433

Notes:

Note: Analyte, method, and/or equipment may be deleted from form if not being performed.

FIELD ANALYTICAL LOG SHEET
GEOCHEMICAL PARAMETERS

Tetra Tech NUS, Inc.

Project Site Name:	NSWC CRANE	Sample ID No.:	16GWT1201
Project No.:	9060	Sample Location:	16MWT12
Sampled By:	JG	Duplicate:	☐
Field Analyst:	TK	Blank:	☐

Sulfide (S^{2-}):

Equipment: DR-850 DR-890 Range: 0 - 0.70 mg/L Concentration: 0.01 ppm

Program/Module: 610nm 93 Analysis Time: 1453 Filtered: ☐

Notes:

Nitrite (NO_2^--N):

Concentration: 0.000 ppm

Equipment: DR-850 DR-850 Range: 0 - 0.350 mg/L Analysis Time: 1434 Filtered: ☐

Program/Module: 62

Standard Solution: ☐ Results: _____ Reagent Blank Correction: ☐

Notes:

Manganese (Mn^{2+}):

Concentration: 9.4 ppm

Equipment: DR-850 DR-850 Range: 0 - 20.0 mg/L Analysis Time: 1501 Filtered: ☐

Program/Module: 525nm 41

Notes:

QA/QC Checklist:

All data fields have been completed as necessary: ☑

Correct measurement units are cited in the SAMPLING DATA block: ☑

Values cited in the SAMPLING DATA block are consistent with the Groundwater Sample Log Sheet: ☑

Mulitplication is correct for each *Multiplier* table: ☑

Final calulated concentration is within the appropriate *Range Used* block: ☑

Alkalinity *Relationship* is determined appropriatly as per manufacturer (HACH) instructions: ☑

QA/QC sample (e.g., Std. Additions, etc.) frequency is appropriate as per the project planning documents: ☑

Nitrite Interference treatment was used for Nitrate test if Nitrite was detected: ☐ NA

Title block on ~~each~~ 1st page of form is initialized by person who performed this QA/QC Checklist: ☑

Tetra Tech NUS, Inc.

GROUNDWATER SAMPLE LOG SHEET

Project Site Name: NSWC CRANE, SWMU16
Project No.: N9060 CTO 0279

[] Domestic Well Data
[X] Monitoring Well Data
[] Other Well Type:
[] QA Sample Type:

Sample ID No.: 16GWT1301
Sample Location: 16GWT13
Sampled By: Goerdt
C.O.C. No.: 4826 & 4824
Type of Sample:
[X] Low Concentration
[] High Concentration

SAMPLING DATA:

Date: 11-22-03	Color (Visual)	pH (S. U.)	S.C. (mS/cm)	Temp. (°C)	Turbidity (NTU)	DO (mg/l)	ORP (mV)	Other NA
Time: 1200								
Method: Peristaltic	Clear	4.72	0.433	21.88	8.67	7.27	264.8	---

PURGE DATA:

Date: 11-22-03	Volume	pH	S.C.	Temp. (C)	Turbidity	DO	Salinity	Other
Method: Peristaltic								
Monitor Reading (ppm): –								
Well Casing Diameter & Material								
Type: 2" Ø PVC	See Low Flow Purge Data Sheets							
Total Well Depth (TD): 20.32								
Static Water Level (WL): 14.80								
One Casing Volume(gal/L): 3.41								
Start Purge (hrs): 0927								
End Purge (hrs): 1157								
Total Purge Time (min): 150								
Total Vol. Purged (gal/L): 17.65								

SAMPLE COLLECTION INFORMATION:

Analysis	Preservative	Container Requirements	Collected
Volatiles SW-846 8260B	4°C/HCl	(3) 40ml Vails	Yes
Volatiles SW-846 8015B	4°C/HCl	(3) 40ml Vails	Yes
Explosives SW-846 8330	4°C	(2) L Glass Amber	Yes
Micellaneous Explosives SW-846 8330	4°C	(2) L Glass Amber	Yes
Total Metals SW846 6020/Mercury 7470A	4°C/HNO_3	(1) L HDPE	Yes
Diss. Metals SW846 6020/Mercury 7470A	4°C/HNO_3	(1) L HDPE	Yes
Nitrate + Nitrite (asN) EPA 353.2 &	4°C/H_2SO_4	(1) L HDPE	Yes
Sulfate & Chloride	4°C	(1) L HDPE	Yes
Methane, Ethane &Ethene	4°C	(2) 40ml Vails	Yes
Total Organic Carbon	4°C/H_3PO_4	(2) 40ml Vails	No

OBSERVATIONS / NOTES:

Filtered Sample Collected (Yes[]) No[X] Yes QS

20.32
14.80
5.52 (.163) = .899 = 3.41 L

Pump shut down during sampling to accomodate drillers work on pad. Restart of pump, checked turbidity before metals indicated 52.6 NTUs. Filtered metal obtained.

Circle if Applicable:

MS/MSD

Duplicate ID No.:

Signature(s): [signature]

Tetra Tech NUS, Inc.

LOW FLOW PURGE DATA SHEET

PROJECT : NSWC CRANE
PROJECT NUMBER: N9060
PROJECT SITE NAME: SWMU 16

WELL ID.: 16GWT130
DATE: 11-22-03
WEATHER: 50° Partly Cloudy

Time (Hrs.)	Water Level (Ft. below TOC)	Volume (gal/L)	Flowrate (mL/min)	pH (S.U.)	Cond. (mS/cm)	Turb. (NTU)	DO (mg/L)	Temp. (Celsius)	ORP (mV)	Comments
0927	14.80	—	—	—	—	—	—	—	—	start purge
0937	15.31	1.20	1200	4.68	0.393	36.4	7.29	15.59	234.5	cloudy
0947	15.51	2.40	1200	4.76	0.384	64.8	7.27	15.80	236.7	"
0957	15.79	3.40	1000	4.88	0.359	72.4	7.67	15.91	231.7	cloudy/brownish
1007	16.09	4.40	1000	4.94	0.320	71.1	7.97	15.81	234.6	"
1017	16.35	5.35	950	4.94	0.323	41.8	7.99	16.19	238.7	"
1027	16.59	6.30	950	4.90	0.331	29.0	7.95	16.33	241.7	"
1037	16.82	7.25	950	4.77	0.351	22.0	7.65	16.36	247.9	clearer
1047	17.07	8.20	950	4.59	0.374	20.1	6.85	16.62	261.6	clear
1057	17.32	9.15	950	4.57	0.381	20.5	6.74	16.54	267.0	"
1107	17.57	10.10	950	4.57	0.386	22.6	7.36	16.69	272.2	"
1117	17.65	11.05	950	4.61	0.406	30.7	7.75	18.77	274.9	"
1127	17.65	12.00	950	4.64	0.423	21.3	7.55	20.55	273.8	"
1137	17.65	12.95	950	4.67	0.431	16.0	7.38	21.52	271.4	"
1147	17.65	13.90	950	4.70	0.435	11.9	7.28	21.98	268.8	"
1157	17.65	14.85	950	4.72	0.433	8.67	7.27	21.88	264.8	" Stop purge
~~1207~~										

Water Quality Meter (S/N) 98F0478 AB
Control Box Type (S/N) NA
Turbidity Meter (S/N) 0920 4298

Pump Intake Depth —

SIGNATURE(S): [signature]

Note: Analyte, method, and/or equipment may be deleted from form if not being performed.

Tetra Tech NUS, Inc.

FIELD ANALYTICAL LOG SHEET
GEOCHEMICAL PARAMETERS

Project Site Name: NSWC CRANE
Project No.: 9060
Sampled By: JGoeldt
Field Analyst: TL/JG
Field Form Checked as per QA/QC Checklist (initials): TL

Sample ID No.: 16GWT1301
Sample Location: 16MWT13
Duplicate: ☐
Blank: ☐

SAMPLING DATA:

	Color (Visual)	pH (S.U.)	S.C. (mS/cm)	Temp. (°C)	Turbidity (NTU)	DO (mg/l)	Salinity (%)	ORP (Eh) (+/- mv)
Date: 11-22-03								
Time: 1200								
Method: Peristaltic	CLEAR	4.72	0.433	21.88	8.67	7.27	—	+264.8

SAMPLE COLLECTION/ANALYSIS INFORMATION:

ORP (Eh) (+/- mv)

Electrode Make & Model: YSI

Reference Electrode (circle one): Silver-Silver Chloride / Calomel / Hydrogen

Dissolved Oxygen:

Equipment: Chemetrics Test Kit

Concentration: 6 ppm

Range Used:	Range	Method	Concentration ppm
☐	0 to 1 ppm	K-7510	
☑	1 to 12 ppm	K-7512	6

Analysis Time: 1320

Notes:

Alkalinity:

Equipment: Chemetrics Test Kit

Concentration: <10 ppm

Range Used:	Range	Method	Concentration ppm
☑	10 to 100 ppm	K-9810	<10
☐	50 to 500 ppm	K-9815	
☐	100 to 1000 ppm	K-9820	

Analysis Time: 1325

Filtered: ☐

Notes:

Carbon Dioxide:

Equipment: Chemetrics Test Kit

Concentration: 140 ppm

Range Used:	Range	Method	Concentration ppm
☐	10 to 100 ppm	K-1910	
☑	100 to 1000 ppm	K-1920	140
☐	250 to 2500 ppm	K-1925	

Analysis Time: 130

Notes:

Ferrous Iron (Fe^{2+}):

Equipment: DR-850 DR-850 Range: 0 - 3.00 mg/L

Program/Module: 500nm 33

Concentration: >3.30 ppm

Analysis Time: 1340

Notes: WELL PAD WAS PURGED STRAIGHT TUBING TO MAX; ADDED AN EXTENSION TO (1335) lowered intake - turbidity increased

Filtered: ☑

Hydrogen Sulfide (H_2S): Range: 0 - 5 mg/L

Equipment: HS-C Other:

Concentration: 0.0 ppm (JG)

Exceeded 5.0 mg/L range on color chart: ☐

Analysis Time: 1325

Notes:

Note: Analyte, method, and/or equipment may be deleted from form if not being performed.

FIELD ANALYTICAL LOG SHEET
GEOCHEMICAL PARAMETERS

Tetra Tech NUS, Inc.

Project Site Name:	NSWC CRANE	Sample ID No.:	16GWT1301
Project No.:	9060	Sample Location:	16MWT13
Sampled By:	J.G	Duplicate:	☐
Field Analyst:	T.R	Blank:	☐

Sulfide (S^{2-}):

Equipment: DR-850 DR-8 90 Range: 0 - 0.70 mg/L Concentration: 0.02 ppm

Program/Module: 610nm 93 Analysis Time: 1401 Filtered: ☑

Notes:

Nitrite (NO_2^--N):

Concentration: 0.008 ppm

Equipment: DR-850 DR-8 50 Range: 0 - 0.350 mg/L Analysis Time: 1331 Filtered: ☐

Program/Module: 62

Standard Solution: ☐ Results: _____ Reagent Blank Correction: ☐

Notes:

Manganese (Mn^{2+}):

Concentration: 4.1 ppm

Equipment: DR-850 DR-8 50 Range: 0 - 20.0 mg/L Analysis Time: 1405 Filtered: ☑

Program/Module: 525nm 41

Notes:

QA/QC Checklist:

All data fields have been completed as necessary: ☑

Correct measurement units are cited in the SAMPLING DATA block: ☑

Values cited in the SAMPLING DATA block are consistent with the Groundwater Sample Log Sheet: ☑

Mulitplication is correct for each *Multiplier* table: ☑

Final calulated concentration is within the appropriate *Range Used* block: ☑

Alkalinity *Relationship* is determined appropriatly as per manufacturer (HACH) instructions: ☑

QA/QC sample (e.g., Std. Additions, etc.) frequency is appropriate as per the project planning documents: ☐

Nitrite Interference treatment was used for Nitrate test if Nitrite was detected: ☐ NA

Title block on ~~each~~ 1st page of form is initialized by person who performed this QA/QC Checklist: ☑

Tetra Tech NUS, Inc.

GROUNDWATER SAMPLE LOG SHEET

Project Site Name: NSWC CRANE, SWMU16
Project No.: N9060 CTO 0279

[] Domestic Well Data
[X] Monitoring Well Data
[] Other Well Type:
[] QA Sample Type:

Sample ID No.: 16GWT1501
Sample Location: 16GWT15
Sampled By: Goerdt
C.O.C. No.: 4835,4833
Type of Sample:
[X] Low Concentration
[] High Concentration

SAMPLING DATA:

Date: 12-6-03	Color (Visual)	pH (S. U.)	S.C. (mS/cm)	Temp. (°C)	Turbidity (NTU)	DO (mg/l)	ORP (mV)	Other NA
Time: 1352								
Method: Bladder pump	Clear	7.99	0.392	12.78	22.5	2.57	174.1	---

PURGE DATA:

Date: 12-6-03	Volume	pH	S.C.	Temp. (C)	Turbidity	DO	Salinity	Other
Method: Bladder pump	21.6 L	7.99	0.392	12.78	22.5	2.57	—	—
Monitor Reading (ppm):								
Well Casing Diameter & Material Type: 2" ø PVC								
			See Low Flow Purge Data Sheets					
Total Well Depth (TD): 94.7								
Static Water Level (WL): 52.2								
One Casing Volume(gal/L): 26.2								
Start Purge (hrs): 0950								
End Purge (hrs): 1350								
Total Purge Time (min): 240								
Total Vol. Purged (gal/L): 21.6								

SAMPLE COLLECTION INFORMATION:

Analysis	Preservative	Container Requirements	Collected
Volatiles SW-846 8260B	4°C/HCl	(3) 40ml Vails	Yes
Volatiles SW-846 8015B	4°C/HCl	(3) 40ml Vails	Yes
Explosives SW-846 8330	4°C	(2) L Glass Amber	Yes
Micellaneous Explosives SW-846 8330	4°C	(2) L Glass Amber	Yes
Total Metals SW846 6020/Mercury 7470A	4°C/HNO_3	(1) L HDPE	Yes
Diss. Metals SW846 6020/Mercury 7470A	4°C/HNO_3	(1) L HDPE	Yes
Nitrate + Nitrite (asN) EPA 353.2 &	4°C/H_2SO_4	(1) L HDPE	Yes
Sulfate & Chloride	4°C	(1) L HDPE	Yes
Methane, Ethane &Ethene	4°C	(2) 40ml Vails	Yes
Total Organic Carbon	4°C/H_3PO_4	(2) 40ml Vails	Yes

OBSERVATIONS / NOTES:

Filtered Sample Collected Yes[X] No[]

94.7
52.2
42.5(.163) = 6.93 gal = 26.22 L

Circle if Applicable:

MS/MSD	Duplicate ID No.:	Signature(s):
—	—	[signature]

D-MNA

Tetra Tech NUS, Inc.

LOW FLOW PURGE DATA SHEET

PROJECT : NSWC CRANE
PROJECT NUMBER: N9060
PROJECT SITE NAME: SWMU 16

WELL ID.: 16GWT1501
DATE: 12-6-03
WEATHER: Sunny 32° F

Time (Hrs.)	Water Level (Ft. below TOC)	Volume (gal/L)	Flowrate (mL/min)	pH (S.U.)	Cond. (mS/cm)	Turb. (NTU)	DO (mg/L)	Temp. (Celsius)	ORP (mV)	Comments
0950	52.20	—	—	—	—	—	—	—	—	Start purge
1000	53.15	.9	90	7.65	0.362	59.7	7.71	11.53	160.8	clear
1010	53.93	1.8	90	7.89	0.377	32.3	6.76	11.88	158.5	"
1020	55.13	2.7	90	8.09	0.385	34.3	3.60	12.19	152.9	"
1030	55.85	3.6	90	8.10	0.388	32.8	3.26	12.47	153.5	"
1040	56.53	4.5	90	8.10	0.387	30.5	3.09	12.33	155.5	"
1050	56.92	5.4	90	8.10	0.386	30.1	2.92	12.29	157.3	"
1100	57.54	6.3	90	8.11	0.384	30.3	2.89	12.44	158.6	"
1110	58.05	7.2	90	8.10	0.387	29.8	2.88	12.54	158.7	"
1120	58.94	8.1	90	8.10	0.386	24.3	2.87	12.43	160.9	"
1130	59.61	9.0	90	8.09	0.387	23.3	2.86	12.42	162.2	"
1140	59.92	9.9	90	8.09	0.387	23.5	2.85	12.42	162.4	"
1150	60.47	10.8	90	8.09	0.387	23.2	2.86	12.42	162.7	"
1200	61.39	11.7	90	8.08	0.389	23.4	2.78	12.55	166.1	"
1210	61.87	12.6	90	8.08	0.390	24.1	2.72	12.59	170.8	"
1220	62.69	13.5	90	8.06	0.392	24.3	2.66	12.60	172.3	"
1230	63.01	14.4	90	8.06	0.394	24.3	2.40	12.63	174.0	"
1240	63.72	15.3	90	8.04	0.395	24.5	2.61	12.72	174.7	"
1250	64.33	16.2	90	8.04	0.395	24.7	2.60	12.77	175.9	"
1300	65.08	17.1	90	8.04	0.393	24.2	2.61	12.75	175.2	"
1310	65.75	18.0	90	8.04	0.394	22.7	2.59	12.73	174.1	"
1320	66.43	18.9	90	8.06	0.393	22.4	2.58	12.74	173.8	"

Water Quality Meter (S/N) 98F0478-AB
Control Box Type (S/N) NA
Turbidity Meter (S/N) 3317-2402

Pump Intake Depth 90'

SIGNATURE(S):

Tetra Tech NUS, Inc.

LOW FLOW PURGE DATA SHEET

PROJECT : NSWC CRANE
PROJECT NUMBER: N9060
PROJECT SITE NAME: SWMU 16

WELL ID.: 16GWT1501
DATE: 12-6-03
WEATHER: Sun 38°

Time (Hrs.)	Water Level (Ft. below TOC)	Volume (gal/L)	Flowrate (mL/min)	pH (S.U.)	Cond. (mS/cm)	Turb. (NTU)	DO (mg/L)	Temp. (Celsius)	ORP (mV)	Comments
1330	66.92	19.8	90	8.02	0.392	22.6	2.58	12.76	173.7	Clear
1340	68.36	20.7	90	8.00	0.392	22.4	2.56	12.76	173.4	"
1350	68.81	21.6	90	7.99	0.392	22.5	2.57	12.78	174.1	Stop Purge

Water Quality Meter (S/N) 98F0478 AB
Control Box Type (S/N) NA
Turbidity Meter (S/N) 3317-2402

Pump Intake Depth 90'

SIGNATURE(S): [signature]

Note: Analyte, method, and/or equipment may be deleted from form if not being performed.

FIELD ANALYTICAL LOG SHEET
GEOCHEMICAL PARAMETERS

Tetra Tech NUS, Inc.

Project Site Name: NSWC CRANE
Project No.: 9060 CTO 279
Sampled By: Gocadt
Field Analyst: Gocadt
Field Form Checked as per QA/QC Checklist (initials): TR

Sample ID No.: 16GWT 1501
Sample Location: 16GWT 15 /M (TR)
Duplicate: ☑
Blank: ☐

SAMPLING DATA:

	Color	pH	S.C.	Temp.	Turbidity	DO	Salinity	ORP (Eh)
Date: 12-6-03								
Time: 1352	(Visual)	(S.U.)	(mS/cm)	(°C)	(NTU)	(mg/l)	(%)	(+/- mv)
Method: Bladder	Clear	7.99	0.392	12.78	22.5	2.57	—	+174.1

SAMPLE COLLECTION/ANALYSIS INFORMATION:

ORP (Eh) (+/- mv)
Electrode Make & Model: YSI
Reference Electrode (circle one): Silver-Silver Chloride / Calomel / Hydrogen

Dissolved Oxygen:
Equipment: Chemetrics Test Kit
Concentration: 3.5/4.1 ppm
Analysis Time: 1524/1527

Range Used:	Range	Method	Concentration ppm
☐	0 to 1 ppm	K-7510	
☒	1 to 12 ppm	K-7512	3.5/4.0

Notes:

Alkalinity:
Equipment: Chemetrics Test Kit
Concentration: 250/240 ppm
Analysis Time: 1550/1553
Filtered: ☑

Range Used:	Range	Method	Concentration ppm
☐	10 to 100 ppm	K-9810	
☑	50 to 500 ppm	K-9815	250/
☐	100 to 1000 ppm	K-9820	

Notes:

Carbon Dioxide:
Equipment: Chemetrics Test Kit
Concentration: <10/<10 ppm
Analysis Time: 1532/1537

Range Used:	Range	Method	Concentration ppm
☑	10 to 100 ppm	K-1910	<10/<10
☐	100 to 1000 ppm	K-1920	
☐	250 to 2500 ppm	K-1925	

Notes:

Ferrous Iron (Fe^{2+}):
Equipment: DR-850 DR-8 __ Range: 0 - 3.00 mg/L
Program/Module: 500nm 33
Concentration: 0.00/0.00 ppm
Analysis Time: 1606/1612
Filtered: ☑
Notes:

Hydrogen Sulfide (H_2S):
Range: 0 - 5 mg/L
Equipment: HS-C Other:
Exceeded 5.0 mg/L range on color chart: ☐
Concentration: 0.00/0.00 ppm
Analysis Time: 1615/1620
Notes:

Tetra Tech NUS, Inc.

GROUNDWATER SAMPLE LOG SHEET

Project Site Name: NSWC CRANE, SWMU16
Project No.: N9060 CTO 0279

[] Domestic Well Data
[X] Monitoring Well Data
[] Other Well Type:
[] QA Sample Type:

Sample ID No.: 16GWT1601
Sample Location: 16MWT16
Sampled By: T. ROJAHN
C.O.C. No.: 4824
Type of Sample:
[X] Low Concentration
[] High Concentration

SAMPLING DATA:

	Color (Visual)	pH (S. U.)	S.C. (mS/cm)	Temp. (°C)	Turbidity (NTU)	DO (mg/l)	ORP (mV)	Other NA
Date: 11-22-03								
Time: 1745								
Method: SAME	BRN	5.03	1.860	17.61	>1000	5.24	+ 306	---

PURGE DATA:

	Volume	pH	S.C.	Temp. (C)	Turbidity	DO	Salinity	Other PH
Date: 11-22-03								
Method: Dedicated Bailer	1	5.03	1.860	17.61	>1000	5.24	-	+306
Monitor Reading (ppm): —								
Well Casing Diameter & Material								
Type: 2" ø PVC			See Low Flow Purge Data Sheets					
Total Well Depth (TD): 35.2								
Static Water Level (WL): 33.42								
One Casing Volume(gal/L):								
Start Purge (hrs): 0925								
End Purge (hrs): 0926								
Total Purge Time (min): 1								
Total Vol. Purged (gal/L): 1 L								

SAMPLE COLLECTION INFORMATION:

Analysis	Preservative	Container Requirements	Collected
Volatiles SW-846 8260B	4°C/HCl	11/22 (3) 40ml Vails	Yes
Volatiles SW-846 8015B	4°C/HCl	11/22 (3) 40ml Vails	Yes
Explosives SW-846 8330	4°C	11/23 (2) L Glass Amber @ 0915	Yes
Micellaneous Explosives SW-846 8330	4°C	(2) L Glass Amber	~~Yes~~ NO
Total Metals SW846 6020/Mercury 7470A	4°C/HNO_3	11/22 (1) L HDPE	YES ~~Yes~~ ~~NO~~ TL
Diss. Metals SW846 6020/Mercury 7470A	4°C/HNO_3	11/23 (1) L HDPE @ 0915	YES -F
Nitrate + Nitrite (asN) EPA 353.2 &	4°C/H_2SO_4	(1) L HDPE	~~Yes~~ NO
Sulfate & Chloride	4°C	(1) L HDPE	~~Yes~~
Methane, Ethane &Ethene	4°C	(2) 40ml Vails	
Total Organic Carbon	4°C/H_3PO_4	(2) 40ml Vails	

OBSERVATIONS / NOTES:

Filtered Sample Collected Yes[X] No[]

35.2 - 33.42 = 1.48' x 0.163 = 0.24 gal or 1L

WELL DRY AFTER 1 Volume

Circle if Applicable:

MS/MSD	Duplicate ID No.:	Signature(s):
—	—	[signature]

Note: Analyte, method, and/or equipment may be deleted from form if not being performed.

FIELD ANALYTICAL LOG SHEET
GEOCHEMICAL PARAMETERS

Tetra Tech NUS, Inc.

Project Site Name: NSWC CRANE

Project No.: 9060 CTO 279

Sampled By: Gocrdt

Field Analyst: Gocrdt

Sample ID No.: 16GWT1501

Sample Location: 16GWT15 M (T2)

Duplicate: ☑

Blank: ☐

Sulfide (S^{2-}):

Equipment: DR-850 DR-8 __ Range: 0 - 0.70 mg/L

Program/Module: 610nm 93

Concentration: 0.01/0.02 ppm

Analysis Time: 1628/1629 Filtered: ☑

Notes:

Nitrite (NO_2^--N):

Equipment: DR-850 DR-8 __ Range: 0 - 0.350 mg/L

Program/Module: 62

Concentration: 0.007/0.012 ppm

Analysis Time: 1441/1508 Filtered: ☑

Standard Solution: ☐ Results: _____

Reagent Blank Correction: ☐

Notes:

Manganese (Mn^{2+}):

Equipment: DR-850 DR-8 __ Range: 0 - 20.0 mg/L

Program/Module: 525nm 41

Concentration: 0.3/0.2 ppm

Analysis Time: 1634/1635 Filtered: ☑

Notes:

QA/QC Checklist:

All data fields have been completed as necessary: ☑

Correct measurement units are cited in the SAMPLING DATA block: ☑

Values cited in the SAMPLING DATA block are consistent with the Groundwater Sample Log Sheet: ☑

Mulitplication is correct for each *Multiplier* table: ☑

Final calulated concentration is within the appropriate *Range Used* block: ☑

Alkalinity *Relationship* is determined appropriatly as per manufacturer (HACH) instructions: ☑

QA/QC sample (e.g., Std. Additions, etc.) frequency is appropriate as per the project planning documents: ☑

Nitrite Interference treatment was used for Nitrate test if Nitrite was detected: ☑ NA

Title block on ~~each~~ 1st page of form is initialized by person who performed this QA/QC Checklist: ☑

Tetra Tech NUS, Inc.

GROUNDWATER SAMPLE LOG SHEET

Project Site Name: NSWC CRANE, SWMU16
Project No.: N9060 CTO 0279

[] Domestic Well Data
[X] Monitoring Well Data
[] Other Well Type:
[] QA Sample Type:

Sample ID No.: 16GWT1701
Sample Location: 16GWT17
Sampled By: Gould
C.O.C. No.: 4828
Type of Sample:
[X] Low Concentration
[] High Concentration

SAMPLING DATA:

Date: 12-5-03	Color (Visual)	pH (S. U.)	S.C. (mS/cm)	Temp. (°C)	Turbidity (NTU)	DO (mg/l)	ORP (mV)	Other NA
Time: 1027								
Method: Peristaltic	Clear	5.58	0.649	11.63	5.92	0.63	111.5	---

PURGE DATA:

Date: 12-5-03	Volume	pH	S.C.	Temp. (C)	Turbidity	DO	Salinity	Other
Method: peristaltic	7.65	5.58	0.649	11.63	5.92	0.63	—	—
Monitor Reading (ppm): —								
Well Casing Diameter & Material								
Type: 2" ϕ PVC			See Low Flow Purge Data Sheets					
Total Well Depth (TD): 26.02								
Static Water Level (WL): 15.27								
One Casing Volume(gal/L): 6.63								
Start Purge (hrs): 0900								
End Purge (hrs): 1025								
Total Purge Time (min): 85								
Total Vol: Purged (gal/L): 7.65								

SAMPLE COLLECTION INFORMATION:

Analysis	Preservative	Container Requirements	Collected
Volatiles SW-846 8260B	4°C/HCl	(3) 40ml Vails	Yes
Volatiles SW-846 8015B	4°C/HCl	(3) 40ml Vails	Yes
Explosives SW-846 8330	4°C	(2) L Glass Amber	Yes
Micellaneous Explosives SW-846 8330	4°C	(2) L Glass Amber	Yes
Total Metals SW846 6020/Mercury 7470A	4°C/HNO_3	(1) L HDPE	Yes
Diss. Metals SW846 6020/Mercury 7470A	4°C/HNO_3	(1) L HDPE	No
Nitrate + Nitrite (asN) EPA 353.2 &	4°C/H_2SO_4	(1) L HDPE	Yes
Sulfate & Chloride	4°C	(1) L HDPE	Yes
Methane, Ethane &Ethene	4°C	(2) 40ml Vails	No
Total Organic Carbon	4°C/H_3PO_4	(2) 40ml Vails	No

OBSERVATIONS / NOTES:

Filtered Sample Collected Yes[] No[X]

26.02
15.27
10.75(.163) = 1.75 gal = 6.63 L

Circle if Applicable:

MS/MSD	Duplicate ID No.:	Signature(s):
—	—	

Tetra Tech NUS, Inc.

LOW FLOW PURGE DATA SHEET

PROJECT : NSWC CRANE
PROJECT NUMBER: N9060
PROJECT SITE NAME: SWMU 16

WELL ID.: 16GWT1701
DATE: 12-5-03
WEATHER: Rain 37° F

Time (Hrs)	Water Level (Ft. below TOC)	Volume (gal/L)	Flowrate (mL/min)	pH (S.U.)	Cond. (mS/cm)	Turb. (NTU)	DO (mg/L)	Temp. (Celsius)	ORP (mV)	Comments
0900	15.27	–	–	–	–	–	–	–	–	Start Purge
0910	15.49	1.0	1000	5.96	1.122	379	1.41	11.16	61.2	Cloudy
0920	15.50	2.0	1000	5.97	1.012	25.5	0.98	10.73	65.1	"
0930	15.51	2.7	700	5.87	0.819	184	0.79	10.58	78.9	"
0940	15.56	3.6	900	5.71	0.729	124	0.73	11.31	95.0	"
0950	15.59	4.5	900	5.65	0.687	53.9	0.76	11.50	102.5	Clear
1000	15.62	5.4	900	5.62	0.661	22.3	0.74	11.59	107.0	"
1010	15.64	6.3	900	5.60	0.653	11.9	0.68	11.61	109.5	"
1020	15.65	7.2	900	5.58	0.648	6.04	0.64	11.50	112.4	"
1025	15.65	7.65	450	5.58	0.649	5.92	0.63	11.63	111.5	Stop purge

Water Quality Meter (S/N) 98F0478AB
Control Box Type (S/N) NA
Turbidity Meter (S/N) 3317-2402

Pump Intake Depth ~21'

SIGNATURE(S):

Tetra Tech NUS, Inc.

GROUNDWATER SAMPLE LOG SHEET

Project Site Name: NSWC CRANE, SWMU16
Project No.: N9060 CTO 0279

[] Domestic Well Data
[X] Monitoring Well Data
[] Other Well Type:
[] QA Sample Type:

Sample ID No.: 16GWT1801
Sample Location: 16MWT18
Sampled By: T. ROJAHN
C.O.C. No.: 4394 & 4395
Type of Sample:
[X] Low Concentration
[] High Concentration

SAMPLING DATA:

	Color (Visual)	pH (S. U.)	S.C. (mS/cm)	Temp. (°C)	Turbidity (NTU)	DO (mg/l)	ORP (mV)	Other NA
Date: 1-25-04								
Time: 0853								
Method: SAME	LtGrey	7.23	0.650	14.19	>1000	3.07	-69	---

PURGE DATA:

	Volume	pH	S.C.	Temp. (C)	Turbidity	DO	Salinity	Other
Date: 1-24-04								
Method: Bladder Pump								
Monitor Reading (ppm): -								
Well Casing Diameter & Material								
Type: 2" Ø PVC			See Low Flow Purge Data Sheets					
Total Well Depth (TD): 104.5								
Static Water Level (WL): 96.65								
One Casing Volume(gal/L): 4.8								
Start Purge (hrs): 1115								
End Purge (hrs): 1305								
Total Purge Time (min): 110								
Total Vol. Purged (gal/L) 8.6								

SAMPLE COLLECTION INFORMATION:

Analysis	Preservative	Container Requirements	Collected
Volatiles SW-846 8260B	4°C/HCl	(3) 40ml Vails	Yes
Volatiles SW-846 8015B	4°C/HCl	(3) 40ml Vails	Yes
Explosives SW-846 8330	4°C	(2) L Glass Amber	Yes
Micellaneous Explosives SW-846 8330	4°C	(2) L Glass Amber	Yes
Total Metals SW846 6020/Mercury 7470A	4°C/HNO_3	(1) L HDPE	Yes
Diss. Metals SW846 6020/Mercury 7470A	4°C/HNO_3	(1) L HDPE	YES -F
Nitrate + Nitrite (asN) EPA 353.2 &	4°C/H_2SO_4	(1) L HDPE	Yes
Sulfate & Chloride	4°C	(1) L HDPE	Yes
Methane, Ethane &Ethene	4°C	(2) 40ml Vails	YES
Total Organic Carbon	4°C/H_3PO_4	(2) 40ml Vails	NO

OBSERVATIONS / NOTES:

Filtered Sample Collected Yes[] No[]

104.5 - 96.65 = 7.85 x 0.163 = 1.28 gal or 4.8L

DRIED OUT WELL ON 1-24-04

Circle if Applicable:

MS/MSD	Duplicate ID No.:	Signature(s):
—	—	Terry Rojahn

Tetra Tech NUS, Inc.

LOW FLOW PURGE DATA SHEET

PROJECT : NSWC CRANE
PROJECT NUMBER: N9060
PROJECT SITE NAME: SWMU 16

WELL ID.: 16GWLT19
DATE: 1-24-04
WEATHER: Mostly Sunny 20's

MIN VOL 4.8L

Time (Hrs.)	Water Level (Ft. below TOC)	Volume (gal/L)	Flowrate (mL/min)	pH (S.U.)	Cond. (mS/cm)	Turb. (NTU)	DO (mg/L)	Temp. (Celsius)	ORP (mV)	Comments
1115	96.65	–	–	–	–	–	–	–	–	Grey
1125	97.00	500	50	7.53	0.345	+1000	7.45	12.79	-112	"
1135	97.38	1400	90	7.48	0.414	>1000	4.42	13.49	-146	"
1145	98.18	2300	90	7.36	0.518	>1000	4.45	13.22	-120	"
1155	98.76	3200	90	7.26	0.611	>1000	4.49	13.08	-103	"
1205	99.34	3800	60	7.30	0.608	>1000	5.35	13.44	-75	Lt Grey → Milky
1215	99.91	4600	90	7.34	0.599	>1000	5.46	13.44	-65	" " "
1225	100.20	5100	70	7.37	0.585	>1000	5.71	13.10	-55	" " "
1235	100.55	5800	70	7.38	0.578	>1000	5.80	13.11	-50	" " "
	Turbidity	High	& Drawdown	evident		will	purge	dry	and	
1245			sample	tomorrow	– 1/25/04					
	101.30	7200	140	7.29	0.598	>1000	5.04	14.10	-43	Grey
1255	102.38	8600	140	7.23	0.650	>1000	3.07	14.18	-69	Grey
1305	103.3 Top	of Pump	WELL	DRY						→ DRY
1/25 0858	99.37	–	–	–	–	–	–	–		→ Start Sampling

Water Quality Meter (S/N) 01M0616 AA
Control Box Type (S/N) MP10 · 1449
Turbidity Meter (S/N) 0910 · 4295

Pump Intake Depth ~1' off bottom

SIGNATURE(S): Terry Rogal

Note: Analyte, method, and/or equipment may be deleted from form if not being performed.

FIELD ANALYTICAL LOG SHEET
GEOCHEMICAL PARAMETERS

Tetra Tech NUS, Inc.

Project Site Name: NSWC CRANE
Project No.: ~~N0845~~ 9060
Sampled By: T. ROJAHN
Field Analyst: TR
Field Form Checked as per QA/QC Checklist (initials): TRR

Sample ID No.: ~~01~~ 16GW T1801
Sample Location: 16MWT18
Duplicate: ☐
Blank: ☐

SAMPLING DATA:

	Color (Visual)	pH (S.U.)	S.C. (mS/cm)	Temp. (°C)	Turbidity (NTU)	DO (mg/l)	Salinity (%)	ORP (Eh) (+/- mv)
Date: 1-25-04								
Time: 0853								
Method: Bladder	Lt Grey	7.23	0.650	14.18	71000	3.07	—	-69

SAMPLE COLLECTION/ANALYSIS INFORMATION:

ORP (Eh) (+/- mv)

Electrode Make & Model: YSI
Reference Electrode (circle one): Silver-Silver Chloride / Calomel / Hydrogen

Dissolved Oxygen:

Equipment: Chemetrics Test Kit

Concentration: 4 ppm

Range Used:	Range	Method	Concentration ppm
☑	0 to 1 ppm	K-7510	—
☑	1 to 12 ppm	K-7512	4

Analysis Time: 0954

Notes: —

Alkalinity:

Equipment: Chemetrics Test Kit

Concentration: 500 ppm

Range Used:	Range	Method	Concentration ppm
☐	10 to 100 ppm	K-9810	
☑	50 to 500 ppm	K-9815	—
☑	100 to 1000 ppm	K-9820	500

Analysis Time: 1001

Filtered: ☐

Notes: — —

Carbon Dioxide:

Equipment: Chemetrics Test Kit

Concentration: 18 ppm

Range Used:	Range	Method	Concentration ppm
☑	10 to 100 ppm	K-1910	18
☑	100 to 1000 ppm	K-1920	—
☐	250 to 2500 ppm	K-1925	

Analysis Time: 1007

Notes: — —

Ferrous Iron (Fe^{2+}):

Equipment: DR-850 DR-8 __ Range: 0 - 3.00 mg/L
Program/Module: 500nm 33

Concentration: 0.12 ppm

Analysis Time: 1018

Filtered: ☑

Notes:

Hydrogen Sulfide (H_2S): Range: 0 - 5 mg/L

Equipment: HS-C Other: _____

Exceeded 5.0 mg/L range on color chart: ☐

Concentration: — ppm

Analysis Time: —

Notes: Well dry - could not sample

Note: Analyte, method, and/or equipment may be deleted from form if not being performed.

Tetra Tech NUS, Inc.

FIELD ANALYTICAL LOG SHEET
GEOCHEMICAL PARAMETERS

Project Site Name:	NSWC CRANE	Sample ID No.:	~~01~~ 90 16 GWT1801
Project No.:	~~N0845~~ 9060	Sample Location:	01MWT18
Sampled By:	Terry Rojahn	Duplicate:	☐
Field Analyst:	TR	Blank:	☐

Sulfide (S^{2-}):

Equipment: DR-850 DR-8 __ Range: 0 - 0.70 mg/L Concentration: 0.04 ppm

Program/Module: 610n 93 Analysis Time: 1035 Filtered: ☑

Notes:

Nitrite (NO_2^--N):

Equipment: DR-850 DR-8 __ Range: 0 - 0.350 mg/L Concentration: 0.005 ppm

Program/Module: 62 Analysis Time: 1009 Filtered: ☑

Standard Solution: ☐ Results: _____ Reagent Blank Correction: ☐

Notes:

Manganese (Mn^{2+}):

Equipment: DR-850 DR-8 __ Range: 0 - 20.0 mg/L Concentration: 0.0 ppm

Program/Module: 525nm 41 Analysis Time: 1049 Filtered: ☑

Notes:

QA/QC Checklist:

All data fields have been completed as necessary: ☑

Correct measurement units are cited in the SAMPLING DATA block: ☑

Values cited in the SAMPLING DATA block are consistent with the Groundwater Sample Log Sheet: ☑

Mulitplication is correct for each *Multiplier* table: ☑

Final calulated concentration is within the appropriate *Range Used* block: ☑

Alkalinity *Relationship* is determined appropriatly a[illegible] [illegible]r (HACH) instructions: ☑

QA/QC sample (e.g., Std. Additions, etc.) frequency [illegible] as per the project planning documents: ☑

Nitrite Interference treatment was used for Nitrate test if Nitrite was detected: NA

Title block on each page of form is initialized by person who performed this QA/QC Checklist: ☑

APPENDIX C.4.1
SWMU 13 AND SWMU 16
CHAIN OF CUSTODY RECORDS
ROUND 1

TETRA TECH NUS, INC. CTO - 0279

CHAIN OF CUSTODY NUMBER 0963 | PAGE 1 OF 1

PROJECT NO:	FACILITY:	PROJECT MANAGER	PHONE NUMBER 8308	LABORATORY NAME AND CONTACT:
N90600	NSWC CRANE	R. BASINSKI	412-921-7090	LAUCKS / HUGH PRENTICE
SAMPLERS (SIGNATURE)		FIELD OPERATIONS LEADER	PHONE NUMBER 8857	ADDRESS
		T. ROJAHN	412-921-7090	940 SOUTH HARNEY ST
		CARRIER/WAYBILL NUMBER		CITY, STATE
		FED EX # 8316 7332 7269		SEATTLE, WA. 98108

STANDARD TAT ☒ RUSH TAT ☐ ☐ 24 hr. ☐ 48 hr. ☐ 72 hr. ☐ 7 day ☐ 14 day

CONTAINER TYPE PLASTIC (P) or GLASS (G): P P G G

PRESERVATIVE USED: 4°C 4°C 4°C 4°C

TYPE OF ANALYSIS: VOC 8260B ENCORE; VOC 8015B ENCORE; SVOC (8270C SIM + 8151A) + PCBs (8082); ~~TPH-GRO~~

DATE YEAR 2003	TIME	SAMPLE ID	LOCATION ID	TOP DEPTH (FT)	BOTTOM DEPTH (FT)	MATRIX (GW, SO, SW, SD, QC, ETC.)	COLLECTION METHOD GRAB (G) COMP (C)	No. OF CONTAINERS	VOC 8260B ENCORE	VOC 8015B ENCORE	SVOC (8270C SIM + 8151A) + PCBs (8082)	~~TPH-GRO~~					COMMENTS
3/25	1240	135S01000Z	135B01	0	2	SO	G	2			2						
	1245	135B01020Z	135B01	2	4			2			2						
	1255	135S02000Z	135B02	0	2			2			2						
	1300	135B02020Z	135B02	2	4			2			2						
	1310	135S03000Z	135B03	0	2			2			2						
	1315	135B03020Z	135B03	2	4			2			2						
	1330	135S06000Z	135B06	0	2			7	3	2	2						
	1335	135B06020Z	135B06	2	4			7	3	2	2						
	1350	135S05000Z	135B05	0	2			1			1						
	1355	135B05020Z	135B05	2	4			1			1						
	1415	135S04000Z	135B04	0	2			4			4						MS/MSD
	1420	135B04020Z	135B04	2	4			2			2						
	0000	FD0325030Z	—	—	—			2			2						FROM 135S040002

	DATE	TIME		DATE	TIME
1. RELINQUISHED BY	3/25/03	1900	1. RECEIVED BY FEDERAL EXPRESS	3/25/03	1900
2. RELINQUISHED BY	DATE	TIME	2. RECEIVED BY	DATE	TIME
3. RELINQUISHED BY	DATE	TIME	3. RECEIVED BY	DATE	TIME

COMMENTS

DISTRIBUTION: WHITE (ACCOMPANIES SAMPLE) YELLOW (FIELD COPY) PINK (FILE COPY)

4/02R
FORM NO. TtNUS-001

TETRA TECH NUS, INC.
CTU-0279

CHAIN OF CUSTODY | NUMBER 0964 | PAGE 1 OF 1

PROJECT NO:	FACILITY:	PROJECT MANAGER	PHONE NUMBER	LABORATORY NAME AND CONTACT:
N9060	NSWC CRANE	R. BASINSKI	412-921-8308	LAUCKS / HUGH PRENTICE
SAMPLERS (SIGNATURE)		FIELD OPERATIONS LEADER	PHONE NUMBER	ADDRESS
		T. ROTAHN	412-921-8857	940 SOUTH HARNEY ST.
		CARRIER/WAYBILL NUMBER		CITY, STATE
		FEDEX # 831673327269		SEATTLE WA 98108

STANDARD TAT ☑
RUSH TAT ☐
☐ 24 hr. ☐ 48 hr. ☐ 72 hr. ☐ 7 day ☐ 14 day

CONTAINER TYPE PLASTIC (P) or GLASS (G): G
PRESERVATIVE USED: 4°C, HCL

TYPE OF ANALYSIS: 40 ML VOC

DATE YEAR 2003	TIME	SAMPLE ID	LOCATION ID	TOP DEPTH (FT)	BOTTOM DEPTH (FT)	MATRIX (GW, SO, SW, SD, QC, ETC.)	COLLECTION METHOD GRAB (G) COMP (C)	NO. OF CONTAINERS									COMMENTS
3/25	1900	TB03250301	QC	–	–	QC	G	3	3								TRIP BLANK

1. RELINQUISHED BY	DATE 3/25/03	TIME 1900	1. RECEIVED BY FEDERAL EXPRESS	DATE 3/25/03	TIME 1900
2. RELINQUISHED BY	DATE	TIME	2. RECEIVED BY	DATE	TIME
3. RELINQUISHED BY	DATE	TIME	3. RECEIVED BY	DATE	TIME

COMMENTS

DISTRIBUTION: WHITE (ACCOMPANIES SAMPLE) YELLOW (FIELD COPY) PINK (FILE COPY)

4/02R
FORM NO. TtNUS-001

TERRA TECH NUS, INC. CTO: 0279

CHAIN OF CUSTODY

NUMBER 0970

PROJECT NO:	FACILITY:	PROJECT MANAGER	PHONE NUMBER	LABORATORY NAME AND CONTACT:
N9060	NSWC CRANE	R. BASINSKI	(412) 921-8308	LAUCKS / HUGH PRENTICE
SAMPLERS (SIGNATURE)		FIELD OPERATIONS LEADER	PHONE NUMBER	ADDRESS
[signature]		T. ROJAHN	(412) 921-8857	940 SOUTH HARNEY ST.
		CARRIER/WAYBILL NUMBER		CITY, STATE
		FED. EX. # 8316 7332 7258		SEATTLE WA 98108

STANDARD TAT ☒
RUSH TAT ☐
☐ 24 hr. ☐ 48 hr. ☐ 72 hr. ☐ 7 day ☐ 14 day

DATE YEAR 2003	TIME	SAMPLE ID	LOCATION ID	TOP DEPTH (FT)	BOTTOM DEPTH (FT)	MATRIX (GW, SO, SW, SD, QC, ETC.)	COLLECTION METHOD GRAB (G) COMP (C)	No. OF CONTAINERS	VOCs 40ml Vials	SVOCs 8270C	SVOCs SIM	SVOC 8151A	METALS & Hg 6020 7470A	PCBs 8082	EXPLOSIVES 8330	EXPLOSIVES PICRATES	COMMENTS
CONTAINER TYPE PLASTIC (P) or GLASS (G)									G	G	G	G	P	G	G	G	
PRESERVATIVE USED									HCl 4°C	4°C	4°C	4°C	HNO3 4°C	4°C	4°C	4°C	
3/26	0700	TB 03260301	QC	—	—	QC	G	3	3								TRIP BLANK
3/26	1415	SB 03260301	QC	—	—	QC	G	12	3	2	2	2	1	2			TAP SOURCE BLANK
3/26	1500	RB 03260301	QC	—	—	QC	G	16	3	2	2	2	1	2	2	2	CUC SLEEVE RINSATE
3/26	1525	SB 03260302	QC	—	—	QC	G	12	3	2	2	2	1	2			DI SOURCE BLANK

1. RELINQUISHED BY [signature]	DATE 3/26/03	TIME 1830	1. RECEIVED BY [signature]	DATE 3/26/03	TIME 1830
2. RELINQUISHED BY	DATE	TIME	2. RECEIVED BY	DATE	TIME
3. RELINQUISHED BY	DATE	TIME	3. RECEIVED BY	DATE	TIME

COMMENTS

DISTRIBUTION: WHITE (ACCOMPANIES SAMPLE) YELLOW (FIELD COPY) PINK (FILE COPY)

4/02R
FORM NO. TtNUS-001

TETRA TECH NUS, INC.

CTO: 0279

CHAIN OF CUSTODY | NUMBER 0966 | PAGE 1 OF 1

PROJECT NO:	FACILITY:	PROJECT MANAGER	PHONE NUMBER	LABORATORY NAME AND CONTACT:
N9060	NSWC CRANE	R. BASINSKI	(412) 921-8308	TRIANGLE LAB / NORM HOFFA
SAMPLERS (SIGNATURE)		FIELD OPERATIONS LEADER	PHONE NUMBER	ADDRESS
[signature]		T. ROJAHN	(412) 921-8857	801 CAPITOLA DRIVE
		CARRIER/WAYBILL NUMBER		CITY, STATE
		FED EX # 831673327247		DURHAM, NC 27713

STANDARD TAT ☒
RUSH TAT ☐
☐ 24 hr. ☐ 48 hr. ☐ 72 hr. ☐ 7 day ☐ 14 day

CONTAINER TYPE PLASTIC (P) or GLASS (G): G

PRESERVATIVE USED: 4°C

TYPE OF ANALYSIS: Dioxin / Furan 8290

DATE YEAR 2003	TIME	SAMPLE ID	LOCATION ID	TOP DEPTH (FT)	BOTTOM DEPTH (FT)	MATRIX (GW, SO, SW, SD, QC, ETC.)	COLLECTION METHOD GRAP (G) COMP (C)	No. OF CONTAINERS	Dioxin / Furan 8290	COMMENTS
3/26	0750	135513 0002	135B13	0	2	SO	G	1	1	
3/26	0755	135B130204	135B13	2	4	SO	G	1	1	
3/26	0830	135B12 0002	135B12	0	2	SO	G	1	1	
3/26	0835	135B120204	135B12	2	4	SO	G	1	1	
3/26	0915	135B11 0002 (FR)	135B11	0	2	SO	G	1	1	
3/26	0920	135B110204	135B11	2	4	SO	G	1	1	
3/26	0930	135B10 0002	135B10	0	2	SO	G	1	1	
3/26	0935	135B10 0204	135B10	2	4	SO	G	1	1	
3/26	0945	135509 0002	135B09	0	2	SO	G	1	1	
3/26	0950	135B090204	135B09	2	4	SO	G	1	1	
3/26	1500	RB03260301	QA	–	–	QC	G	2	2	RINSATE CUBE SLEEVE
3/26	0000	FD03260301	—	—	—	SO	G	1	1	FROM 135S090002

1. RELINQUISHED BY [signature]	DATE 3/26/03	TIME 1830	1. RECEIVED BY FEDERAL EXPRESS	DATE 3/26/03	TIME 1830
2. RELINQUISHED BY	DATE	TIME	2. RECEIVED BY	DATE	TIME
3. RELINQUISHED BY	DATE	TIME	3. RECEIVED BY	DATE	TIME

COMMENTS

DISTRIBUTION: WHITE (ACCOMPANIES SAMPLE) YELLOW (FIELD COPY) PINK (FILE COPY)

4/02R
FORM NO. TtNUS-001

TERRA TECH NUS, INC. CTO: 0279

CHAIN OF CUSTODY

NUMBER 0968

PAGE 1 OF 1

PROJECT NO:	FACILITY:	PROJECT MANAGER	PHONE NUMBER	LABORATORY NAME AND CONTACT:
N19060	NSWC CRANE	R. BASINSKI	(412) 921-8308	LAUCKS / HUGH PRENTICE
SAMPLERS (SIGNATURE)		FIELD OPERATIONS LEADER	PHONE NUMBER	ADDRESS
Terry Rojahn		T. ROJAHN	(412) 921 8857	940 SOUTH HARNEY ST.
		CARRIER/WAYBILL NUMBER		CITY, STATE
		FED. EX # 8316 7332 7258		SEATTLE, WA 98108

STANDARD TAT ☒
RUSH TAT ☐
☐ 24 hr. ☐ 48 hr. ☐ 72 hr. ☐ 7 day ☐ 14 day

CONTAINER TYPE PLASTIC (P) or GLASS (G): G

PRESERVATIVE USED: 4°C

TYPE OF ANALYSIS: SVOC (8270C, SIM & 8151A) & PCB (8082); TOC (Lloyd KAHN); CEC (9081); PH (9045C)

DATE YEAR 2003	TIME	SAMPLE ID	LOCATION ID	TOP DEPTH (FT)	BOTTOM DEPTH (FT)	MATRIX (GW, SO, SW, SD, QC, ETC.)	COLLECTION METHOD GRAP (G) COMP (C)	No. OF CONTAINERS	SVOC (8270C, SIM & 8151A) & PCB (8082)	TOC (Lloyd KAHN)	CEC (9081)	PH (9045C)	COMMENTS
3/26	0750	135513 0002	135B13	0	2	SO	G	2	2				
3/26	0755	135B130204	135B13	2	4	SO	G	2	2				
3/26	0830	135512 0002	135B12	0	2	SO	G	2	2				
3/26	0835	135B120204	135B12	2	4	SO	G	2	2				
3/26	0915	135511 0002	135B11	0	2	SO	G	2	2				
3/26	0920	135B110204	135B11	2	4	SO	G	2	2				
3/26	0930	135B10 0002 (TT)	135B10	0	2	SO	G	2	2				
3/26	0935	135B100204	135B10	2	4	SO	G	2	2				
3/26	0945	135509 0002	135B09	0	2	SO	G	2	2				
3/26	0950	135B090204	135B09	2	4	SO	G	1	1				
3/26	1320	135B070002 (TT)	135B07	0	2	SO	G	2	—	2	X	X	
3/26	1330	135B070810	135B07	8	10	SO	G	2	—	2	X	X	
3/26	0000	FD03260301	—	—	—	SO	G	2	2				DUP FROM 135509 0002

	DATE	TIME		DATE	TIME
1. RELINQUISHED BY Terry Rojahn	3/26/03	1830	1. RECEIVED BY FEDERAL EXPRESS	3/26/03	1830
2. RELINQUISHED BY	DATE	TIME	2. RECEIVED BY	DATE	TIME
3. RELINQUISHED BY	DATE	TIME	3. RECEIVED BY	DATE	TIME

COMMENTS: X = Additional Parameters for analysis!

DISTRIBUTION: WHITE (ACCOMPANIES SAMPLE) YELLOW (FIELD COPY) PINK (FILE COPY)

4/02R
FORM NO. TINUS-001

TETRA TECH NUS, INC.

CHAIN OF CUSTODY

NUMBER 0965

PAGE 1 OF 1

CTO 279

PROJECT NO:	FACILITY:	PROJECT MANAGER	PHONE NUMBER	LABORATORY NAME AND CONTACT:
H9060	NSWC CRANE	R. BASINSKI	(412) 921-8308	TRIANGLE LAB / NORM HOFFA
SAMPLERS (SIGNATURE)		FIELD OPERATIONS LEADER	PHONE NUMBER	ADDRESS
		T. ROJAHN	(412) 921-8857	801 CAPITOLA DRIVE
		CARRIER/WAYBILL NUMBER		CITY, STATE
		FED. EX. # 8316 7332 7247		DURHAM, NC 27713

STANDARD TAT ☒
RUSH TAT ☐
☐ 24 hr. ☐ 48 hr. ☐ 72 hr. ☐ 7 day ☐ 14 day

CONTAINER TYPE PLASTIC (P) or GLASS (G): G

PRESERVATIVE USED: 4°C

DATE YEAR 2003	TIME	SAMPLE ID	LOCATION ID	TOP DEPTH (FT)	BOTTOM DEPTH (FT)	MATRIX (GW, SO, SW, SD, QC, ETC.)	COLLECTION METHOD GRAP (G) COMP (C)	No. OF CONTAINERS	TYPE OF ANALYSIS: Dioxin/Furan (8290)								COMMENTS
3/25	1240	1355010002	135B01	0	2	SO	G	1	1								
3/25	1245	135B010204	135B01	2	4	SO	G	1	1								
3/25	1255	1355020002	135B02	0	2	SO	G	1	1								
3/25	1300	135B020204	135B02	2	4	SO	G	1	1								
3/25	1310	1355030002	135B03	0	2	SO	G	1	1								
3/25	1315	135B030204	135B03	2	4	SO	G	1	1								
3/25	1330	1355060002	135B06	0	2	SO	G	1	1								
3/25	1335	135B060204	135B06	2	4	SO	G	1	1								
3/25	1350	135~~B~~S050002	135B05	0	2	SO	G	1	1								
3/25	1355	135B050204	135B05	2	4	SO	G	1	1								
3/25	1415	135~~B~~S040002	135B04	0	2	SO	G	2	2								DO MS/MSD
3/25	1420	135B040204	135B04	2	4	SO	G	1	1								
3/25	0000	FD03250301	—	—	—	SO	G	1	1								FROM 1355040002

	DATE	TIME		DATE	TIME
1. RELINQUISHED BY	3/26/03	1830	1. RECEIVED BY FEDERAL EXPRESS	3/26/03	1830
2. RELINQUISHED BY	DATE	TIME	2. RECEIVED BY	DATE	TIME
3. RELINQUISHED BY	DATE	TIME	3. RECEIVED BY	DATE	TIME

COMMENTS

DISTRIBUTION: WHITE (ACCOMPANIES SAMPLE) YELLOW (FIELD COPY) PINK (FILE COPY)

4/02R
FORM NO. TtNUS-001

TETRA TECH NUS, INC. CHAIN OF CUSTODY NUMBER 0959 PAGE 1 OF 1

CTO: 0279

PROJECT NO:	FACILITY:	PROJECT MANAGER	PHONE NUMBER	LABORATORY NAME AND CONTACT:
9060	NSWC CRANE	RALPH BASINSKI	(412) 921-8308	LAUCKS / HUGH PRENTICE
SAMPLERS (SIGNATURE)		FIELD OPERATIONS LEADER	PHONE NUMBER	ADDRESS
Terry Rojahn		TERRY ROJAHN	(412) 921-8857	940 SOUTH HARNEY ST.
		CARRIER/WAYBILL NUMBER		CITY, STATE
		FED. EX # 8316 7332 7236		SEATTLE, WA 98108

STANDARD TAT ☒
RUSH TAT ☐
☐ 24 hr. ☐ 48 hr. ☐ 72 hr. ☐ 7 day ☐ 14 day

DATE YEAR 2003	TIME	SAMPLE ID	LOCATION ID	TOP DEPTH (FT)	BOTTOM DEPTH (FT)	MATRIX (GW, SO, SW, SD, QC, ETC.)	COLLECTION METHOD GRAP (G) COMP (C)	No. OF CONTAINERS	VOCS 8260B ENCORE	VOCS 8015B ENCORE	SVOC 8270C/SIM/8151A	PCBS 8082	EXPLOSIVES 8330/PICRATES	METALS 6020 / Hg 7471A	TOC Lloyd KHAN	CEC (9081)	PH (9045C)	COMMENTS
								CONTAINER TYPE PLASTIC (P) or GLASS (G)	P	P	G	G	G	G	G	G		
								PRESERVATIVE USED	4°C	4°C	4°C	4°C	4°C	4°C	4°C	4°C		
3/27	0715	TB032703 01	QC	–	–	QC	G	3	2	1								VOA VIALS Trip Blank
3/27	0845	165S010002	165B01	0	2	SO	G	7	3	2	1	X	X	1				
3/27	0900	165B010406	165B01	4	6	SO	G	5	3	–	1	X	X	1				
3/27	0905	165S020002	165B02	0	2	SO	G	7	3	2	1	X	X	1	X	X	X	
3/27	0915	165B020406	165B02	4	6	SO	G	5	3	–	1	X	X	1	X	X	X	
3/27	0940	165B030002	165B03	0	2	SO	G	7	3	2	1	X	X	1				
3/27	1000	165S040002	165B04	0	2	SO	G	7	3	2	1	X	X	1				
3/27	1010	165B410305	165B41	3	5	SO	G	7	3	2	1	–	X	1	X	X	X	
3/27	1015	165B410507	165B41	5	7	SO	G	7	3	2	1	–	X	1	X	X	X	
3/27	1055	165S060002	165B06	0	2	SO	G	7	3	2	1	X	X	1				
3/27	1100	165S070002	165B07	0	2	SO	G	7	3	2	1	X	X	1	X	X	X	
3/27	1330	165S080002	165B08	0	2	SO	G	7	3	2	1	X	X	1				
3/27	1355	165S090002	165B09	0	2	SO	G	7	3	2	1	X	X	1				

	DATE	TIME		DATE	TIME
1. RELINQUISHED BY Terry Rojahn	3/27/03	1900	1. RECEIVED BY FEDERAL EXPRESS	3/27/03	1900
2. RELINQUISHED BY			2. RECEIVED BY		
3. RELINQUISHED BY			3. RECEIVED BY		

COMMENTS X = Additional Parameters for Analysis!!!

DISTRIBUTION: WHITE (ACCOMPANIES SAMPLE) YELLOW (FIELD COPY) PINK (FILE COPY)

4/02R
FORM NO. TtNUS-001

TETRA TECH NUS, INC.

CTO: 0279

CHAIN OF CUSTODY | NUMBER 0960 | PAGE 1 OF 1

PROJECT NO:	FACILITY:	PROJECT MANAGER	PHONE NUMBER	LABORATORY NAME AND CONTACT:
9060	NSWC CRANE	RALPH BASINSKI	(412) 921-8308	LAUCKS / HUGH PRENTICE
SAMPLERS (SIGNATURE)		FIELD OPERATIONS LEADER	PHONE NUMBER	ADDRESS
Terry Rojahn		TERRY ROJAHN	(412) 921-8857	940 SOUTH HARNEY ST.
		CARRIER/WAYBILL NUMBER		CITY, STATE
		FED. EX. # 8316 7332 7236		SEATTLE, WA 98108

STANDARD TAT ☒
RUSH TAT ☐
☐ 24 hr. ☐ 48 hr. ☐ 72 hr. ☐ 7 day ☐ 14 day

DATE YEAR 2003	TIME	SAMPLE ID	LOCATION ID	TOP DEPTH (FT)	BOTTOM DEPTH (FT)	MATRIX (GW, SO, SW, SD, QC, ETC.)	COLLECTION METHOD GRAB (G) COMP (C)	No. OF CONTAINERS	VOCS 8260B ENCORE SAMPLER	VOCS 8015B ENCORE SAMPLER	SVOC 8270C/SIM/8151A	PCBS 8082	EXPLOSIVES 8330 & PICRATES	METALS 6020 / Hg 7471A	TOC Lloyd Khan	CEC 9081	PH 9045C	COMMENTS
									CONTAINER TYPE PLASTIC (P) or GLASS (G)									
									PRESERVATIVE USED									
3/27	1400	165S100002	165B10	0	2	SO	G	7	3	2	1	X	X	1				
3/27	1415	165S160002	165B16	0	2	SO	G	7	3	2	1	X	X	1				
3/27	1440	165S150002	165B15	0	2	SO	G	19	9	6	2	X	X	2				DO MS/MSD
3/27	1500	165S140002	165B14	0	2	SO	G	7	3	2	1	X	X	1				
3/27	1515 ~~1520~~	165S110002	165B11	0	2	SO	G	7	3	2	1	X	X	1				
3/27	1520	165B110204	165B11	2	4	SO	G	2	—	—	1	—	X	1				
3/27	1540	165S170002	165B17	0	2	SO	G	7	3	2	1	X	X	1				
3/27	1545	165B170204	165B17	2	4	SO	G	2	—	—	1	—	X	1				DO NOT ANALYZE PCBS
3/27	0000	FD03270301	—	—	—	SO	G	7	3	2	1	X	X	1				FROM 165S090002
3/27	0000	FD03270302	—	—	—	SO	G	7	3	2	1	X	X	1				FROM 165S170002
3	~~0000~~	TR																
3/27	1035	165S050002	165B05	0	2	SO	G	7	3	2	1	X	X	1				

1. RELINQUISHED BY	DATE	TIME	1. RECEIVED BY	DATE	TIME
Terry Rojahn	3/27/03	1900	FEDERAL EXPRESS	3/27/03	1900
2. RELINQUISHED BY	DATE	TIME	2. RECEIVED BY	DATE	TIME
3. RELINQUISHED BY	DATE	TIME	3. RECEIVED BY	DATE	TIME

COMMENTS (X) Additional Parameters for Analysis (-) = Do Not Analyze

DISTRIBUTION: WHITE (ACCOMPANIES SAMPLE) YELLOW (FIELD COPY) PINK (FILE COPY)

4/02R
FORM NO. TINUS-001

PRA TECH NUS, INC. CTO: 0279. CHAIN OF CUSTODY NUMBER 0972 PAGE 1 OF 1

PROJECT NO:	FACILITY:	PROJECT MANAGER	PHONE NUMBER	LABORATORY NAME AND CONTACT:
9060	NSWC CRANE	RALPH BASINSKI	(412) 921-8308	LAUCKS / HUGH PRENTICE
SAMPLERS (SIGNATURE)		FIELD OPERATIONS LEADER	PHONE NUMBER	ADDRESS
Terry Rojahn		TERRY ROJAHN	(412) 921-8857	940 SOUTH HARNEY ST.
		CARRIER/WAYBILL NUMBER		CITY, STATE
		FED EX # 8316 7332 7225		SEATTLE WA 98108

STANDARD TAT ☒
RUSH TAT ☐
☐ 24 hr. ☐ 48 hr. ☐ 72 hr. ☐ 7 day ☐ 14 day

DATE YEAR 2003	TIME	SAMPLE ID	LOCATION ID	TOP DEPTH (FT)	BOTTOM DEPTH (FT)	MATRIX (GW, SO, SW, SD, QC, ETC.)	COLLECTION METHOD GRAP (G) COMP (C)	No. OF CONTAINERS	VOCS 8260B	ENCORE	VOCS 8015B	ENCORE	SVOC 8270C/SIM/8151A	PCBS 8082	EXPLOSIVES 8330/PICRATES	METALS 6020 & HG 7471A	TOC Lloyd KHAN	CEC 9081	PH 9045C	COMMENTS
								CONTAINER TYPE PLASTIC (P) or GLASS (G)	P	P	G	G	G	G	G	G				
								PRESERVATIVE USED	4°C	4°C	4°C	4°C	4°C	4°C	4°C	4°C				
3/28	0715	TB03280301	QC	–	–	QC	G	3	2	1										TRIP BLANK VOA VIALS
3/28	0800	16SS130002	16SB13	0	2	SO	G	7	3	2	1	X	X	1						
3/28	0805	16SB130204	16SB13	2	4	SO	G	2	–	–	1	–	X	1						
3/28	0820	16SS120002	16SB12	0	2	SO	G	7	3	2	1	X	X	1	X	X	X			
3/28	0825	16SB120204	16SB12	2	4	SO	G	2	–	–	1	–	X	1	X	X	X			
3/28	0830	16SS310002	16SB31	0	2	SO	G	7	3	2	1	X	X	1	X	X	X			
3/28	0840	16SS300002	16SB30	0	2	SO	G	7	3	2	1	X	X	1						
3/28	0845	16SB300203	16SB30	2	3	SO	G	2	–	–	1	–	X	1						
3/28	0900	16SS290002	16SB29	0	2	SO	G	7	3	2	1	X	X	1						
3/28	0905	16SB290203	16SB29	2	3	SO	G	2	–	–	1	–	X	1						
3/28	0910	16SS220002	16SB22	0	2	SO	G	7	3	2	1	–	X	1						
3/28	0915	16SB220203	16SB22	2	3	SO	G	2	–	–	1	–	X	1						
3/28	0930	16SS250002	16SB25	0	2	SO	G	7	3	2	1	–	X	1						

	DATE	TIME		DATE	TIME
1. RELINQUISHED BY Terry Rojahn	3/28/03	1830	1. RECEIVED BY FEDERAL EXPRESS	3/28/03	1830
2. RELINQUISHED BY			2. RECEIVED BY		
3. RELINQUISHED BY			3. RECEIVED BY		

COMMENTS X = Additional Parameters for Analysis!

DISTRIBUTION: WHITE (ACCOMPANIES SAMPLE) YELLOW (FIELD COPY) PINK (FILE COPY)

4/02R
FORM NO. TtNUS-001

TETRA TECH NUS, INC. CTO: 0279

CHAIN OF CUSTODY | NUMBER 0961 | PAGE 1 OF 1

PROJECT NO:	FACILITY:	PROJECT MANAGER	PHONE NUMBER	LABORATORY NAME AND CONTACT:
9060	NSWC CRANE	RALPH BASINSKI	(412) 921-8308	LAUCKS / HUGH PRENTICE
SAMPLERS (SIGNATURE)		FIELD OPERATIONS LEADER	PHONE NUMBER	ADDRESS
Terry Rojah		TERRY ROJAHN	(412) 921 8857	940 SOUTH HARNEY St.
		CARRIER/WAYBILL NUMBER		CITY, STATE
		FED. EX # 8316 7332 7225		SEATTLE, WA 98108

STANDARD TAT ☒
RUSH TAT ☐ ☐ 24 hr. ☐ 48 hr. ☐ 72 hr. ☐ 7 day ☐ 14 day

DATE YEAR 2003	TIME	SAMPLE ID	LOCATION ID	TOP DEPTH (FT)	BOTTOM DEPTH (FT)	MATRIX (GW, SO, SW, SD, QC, ETC.)	COLLECTION METHOD GRAB (G) COMP (C)	No. OF CONTAINERS	VOCS 8260B ENCORE	VOCS 8015B ENCORE	SVOC 8270C/SIM/8151A	PCBS 8082	EXPLOSIVES 8330/PICRATES	METALS 6020/HG 7471A	TOC Lloyd Khan	CEC 9081	PH 9045C	COMMENTS
CONTAINER TYPE PLASTIC (P) or GLASS (G)									P	P	G	G	G	G	G	G	G	
PRESERVATIVE USED									4°C	4°C	4°C	4°C	4°C	4°C	4°C	4°C	4°C	
3/28	0935	16SB250203	16SB25	2	3	SO	G	2	–	–	1	–	X	1				
3/28	0940	16SS240002	16SB24	0	2	SO	G	7	3	2	1	–	X	1	X	X	X	
3/28	0945	16SB240203	16SB24	2	3	SO	G	2	–	–	1	–	X	1	X	X	X	
3/28	1000	16SS230002	16SB23	0	2	SO	G	7	3	2	1	–	X	1				
3/28	1005	16SB230203	16SB23	2	3	SO	G	2	–	–	1	–	X	1				
3/28	1030	16SS180002	16SB18	0	2	SO	G	7	3	2	1	X	X	1	X	X	X	
3/28	1035	16SB180203	16SB18	2	3	SO	G	2	–	–	1	–	X	1	X	X	X	
3/28	1040	16SS190002	16SB19	0	2	SO	G	7	3	2	1	X	X	1				
3/28	1045	16SB190203	16SB19	2	3	SO	G	2	–	–	1	–	X	1				
3/28	1100	16SS210002	16SB21	0	2	SO	G	19	9	6	2	–	X	2				DO MS/MSD
3/28	1120	16SS270002	16SB27	0	2	SO	G	7	3	2	1	X	X	1				
3/28	1125	16SB270203	16SB27	2	3	SO	G	2	–	–	1	–	X	1				
3/28	1130	16SS280002	16SB28	0	2	SO	G	7	3	2	1	X	X	1				

	DATE	TIME		DATE	TIME
1. RELINQUISHED BY Terry Rojah	3/28/03	1800	1. RECEIVED BY FEDERAL EXPRESS	3/28/03	1830
2. RELINQUISHED BY	DATE	TIME	2. RECEIVED BY	DATE	TIME
3. RELINQUISHED BY	DATE	TIME	3. RECEIVED BY	DATE	TIME

COMMENTS X = Additional Parameters for Analysis!

DISTRIBUTION: WHITE (ACCOMPANIES SAMPLE) YELLOW (FIELD COPY) PINK (FILE COPY)

4/02R
FORM NO: TtNUS-001

TETRA TECH NUS, INC. CTO: 0279

CHAIN OF CUSTODY

NUMBER 0981

PROJECT NO: 9060	FACILITY: NSWC CRANE	PROJECT MANAGER: RALPH BASIAGKA	PHONE NUMBER: 412 921-8308
SAMPLERS (SIGNATURE): Tony Rojahn		FIELD OPERATIONS LEADER: T. ROJAHN	PHONE NUMBER: 412 921-8857
		CARRIER/WAYBILL NUMBER: FED EX # 8316 7332 7225	

LABORATORY NAME AND CONTACT: LAUCKS / HUGH PRENTICE
ADDRESS: 940 SOUTH HARNEY ST.
CITY, STATE: SEATTLE, WA 98108

STANDARD TAT ☒
RUSH TAT ☐
☐ 24 hr. ☐ 48 hr. ☐ 72 hr. ☐ 7 day ☐ 14 day

DATE YEAR 2003	TIME	SAMPLE ID	LOCATION ID	TOP DEPTH (FT)	BOTTOM DEPTH (FT)	MATRIX (GW, SO, SW, SD, QC, ETC.)	COLLECTION METHOD GRAP (G) COMP (C)	No. OF CONTAINERS	VOCs 8260B	VOCs 8260B ENCORE	SVOCs 8270 ENCORE	PCBs 8082/5M/8151A	EXPLOSIVES 8330	METALS 6020 PESTICIDES	TOC / HG 7471A	LUCKY KHAN	CEC 9081	PH 9045	COMMENTS
CONTAINER TYPE PLASTIC (P) or GLASS (G)									P	P	G	G	G	G	G	G			
PRESERVATIVE USED									4°C	4°C	4°C	4°C	4°C	4°C	4°C	4°C			
3/28	1135	165B280203	165B28	2	3	SO	G	2	—	—	1	—	X	1					
3/28	1140	165S200002	165B28	0	2	SO	G	7	3	2	1	—	X	1					
3/28	1440	165S350002	165B35	0	2	SO	G	7	3	2	1	—	X	1					
3/28	1435	165S370002	165B37	0	2	SO	G	7	3	2	1	X	X	1	X	X	X		
3/28	1410	165S380002	165B38	0	2	SO	G	7	3	2	1	X	X	1					
3/28	1415	165B380203	165B38	2	3	SO	G	5	3	—	1	X	X	1					
3/28	1400	165S390002 (TR)	165B39	0	2	SO	G	7	3	2	1	X	X	1					
3/28	1405	165B390203	165B39	2	3	SO	G	5	3	—	1	X	X	1					
3/28	1340	165B400606	165B40	5	6	SO	G	7	3	2	1	—	X	1					
3/28	1345	165B400608	165B40	6	8	SO	G	7	3	2	1	—	X	1					
3/28	0000	FD03280301	QC	—	—	SO	G	7	3	2	1	—	X	1					FROM 165S230002
3/28	0000	FD03280302	QC	—	—	SO	G	2	—	—	1	—	X	1					FROM 165B230203
3/28	0000	FD03280303	QC	—	—	SO	G	7	3	2	1	—	X	1					FROM 165B400608

1. RELINQUISHED BY: Tony Rojahn	DATE: 3/28/03	TIME: 1830	1. RECEIVED BY: FEDERAL EXPRESS	DATE: 3/28/03	TIME: 1830
2. RELINQUISHED BY	DATE	TIME	2. RECEIVED BY	DATE	TIME
3. RELINQUISHED BY	DATE	TIME	3. RECEIVED BY	DATE	TIME

COMMENTS: X = Additional Parameters For Analysis!

DISTRIBUTION: WHITE (ACCOMPANIES SAMPLE) YELLOW (FIELD COPY) PINK (FILE COPY)

4/02R
FORM NO. TtNUS-001

TETRA TECH NUS, INC. CHAIN OF CUSTODY | NUMBER 0979 | PAGE 1 OF 1

CTO: 0279

PROJECT NO:	FACILITY:	PROJECT MANAGER	PHONE NUMBER	LABORATORY NAME AND CONTACT:
N9060	NSWC CRANE	RALPH BASINSKI	(412) 921-8308	LAUCKS / HUGH PRENTICE
SAMPLERS (SIGNATURE)		FIELD OPERATIONS LEADER	PHONE NUMBER	ADDRESS
Robert Balkema		TERRY ROWAHN	(412) 921-8857	940 SOUTH HARNEY ST.
		CARRIER/WAYBILL NUMBER		CITY, STATE
		FED. EX. # 8316 7332 7214		SEATTLE, WA 98108

STANDARD TAT ☒
RUSH TAT ☐
☐ 24 hr. ☐ 48 hr. ☐ 72 hr. ☐ 7 day ☐ 14 day

DATE YEAR 2003	TIME	SAMPLE ID	LOCATION ID	TOP DEPTH (FT)	BOTTOM DEPTH (FT)	MATRIX (GW, SO, SW, SD, QC, ETC.)	COLLECTION METHOD GRAB (G) COMP (C)	No. OF CONTAINERS	TYPE OF ANALYSIS: TOC	Lloyd Khan LEC	PH 9081	9045C					COMMENTS
								CONTAINER TYPE PLASTIC (P) or GLASS (G)	G	G	G						
								PRESERVATIVE USED	4°C	4°C	4°C						
3/30	0745	1355080002	135808	0	2	SO	G	2	2	X	X						
3/30	0800	135~~8~~B080608 (TR)	135808	6	8	SO	G	4	*4	X	X						* DO MS/MSD
3/30	0000	FD03300301	QC	–	–	SO	G	2	2	X	X						FROM 1355080002

1. RELINQUISHED BY	DATE	TIME	1. RECEIVED BY	DATE	TIME
Terry Rowahn	3/31/03	1600	FEDERAL EXPRESS	3/31/03	1600
2. RELINQUISHED BY	DATE	TIME	2. RECEIVED BY	DATE	TIME
3. RELINQUISHED BY	DATE	TIME	3. RECEIVED BY	DATE	TIME

COMMENTS X = Additional Parameters for Analysis!

DISTRIBUTION: WHITE (ACCOMPANIES SAMPLE) YELLOW (FIELD COPY) PINK (FILE COPY)

4/02R
FORM NO. TtNUS-001

TETRA TECH NUS, INC. CTO: 0279 CHAIN OF CUSTODY NUMBER 0978 PAGE 1 OF 1

PROJECT NO:	FACILITY:	PROJECT MANAGER	PHONE NUMBER	LABORATORY NAME AND CONTACT:
N9060	NSWC CRANE	RALPH BASINSKI	(412) 921-8308	LAUCKS / HUGH PRENTICE
SAMPLERS (SIGNATURE)		FIELD OPERATIONS LEADER	PHONE NUMBER	ADDRESS
[signature]		~~TERRY~~ ROJAHN	(412) 921-8857	940 SOUTH HARNEY ST.
		CARRIER/WAYBILL NUMBER		CITY, STATE
		FED. EX. # 8316 7332 7214		SEATTLE, WA 98108

STANDARD TAT ☒
RUSH TAT ☐
☐ 24 hr. ☐ 48 hr. ☐ 72 hr. ☐ 7 day ☐ 14 day

DATE YEAR 2003	TIME	SAMPLE ID	LOCATION ID	TOP DEPTH (FT) INCHES	BOTTOM DEPTH (FT) INCHES	MATRIX (GW, SO, SW, SD, QC, ETC.)	COLLECTION METHOD GRAP (G) COMP (C)	No. OF CONTAINERS	TYPE OF ANALYSIS: EXPLOSIVES	METALS 6020 8330 Hg 7471A	TOC Llyod Khan	CEC 9081	PH 9045C	AVS/SEM (DRAFT EPA METH.)	SVOC 8270C, SIM, 8151A	COMMENTS
								CONTAINER TYPE PLASTIC (P) or GLASS (G)	G	G	G	G	G	G		
								PRESERVATIVE USED	4°C	4°C	4°C	4°C	4°C	4°C		
3/29	1745	135D18 0004	135D18	0	4"	SD	G	2	1	1	–	–	–	–	–	
3/30	0915	135D11 0004	135D11	0	4"	SD	G	2	1	1	X	X	X	X	–	
3/30	0930	135D12 0004	135D12	0	4"	SD	G	2	1	1	–	–	–	–	–	
3/30	1000	135D13 0004	135D13	0	4"	SD	G	2	1	1	–	–	–	–	–	
3/30	1030	135D14 0004	135D14	0	4"	SD	G	2	1	1	X	X	X	X	–	
3/30	1045	135D15 0004	135D15	0	4"	SD	G	2	1	1	–	–	–	–	–	
3/30	1100	135D16 0004	135D16	0	4"	SD	G	2	1	1	–	–	–	–	–	
3/30	1120	135D21 0004	135D21	0	4"	SD	G	2	1	1	–	–	–	–	–	
3/30	1255	135D20 0004	135D20	0	4"	SD	G	2	1	1	X	X	X	X	–	
3/30	1315 ~~1317~~	135D19 0004	135D19	0	4"	SD	G	2	1	1	–	–	–	–	–	STET
3/29	0000	FD03290301	–	0	4"	SD	G	2	1	1	X	~~X~~	~~X~~	~~X~~	~~X~~ TK	FROM 135D05 0004
3/29	0000	FD03290302	–	0	4"	SD	G	2	1	1	–	–	–	–	–	FROM 135D17 0004

1. RELINQUISHED BY	DATE	TIME	1. RECEIVED BY	DATE	TIME
[signature]	3/31/03	1600	FEDERAL EXPRESS	3/31/03	1600
2. RELINQUISHED BY	DATE	TIME	2. RECEIVED BY	DATE	TIME
3. RELINQUISHED BY	DATE	TIME	3. RECEIVED BY	DATE	TIME

COMMENTS X = Additional Parameters for Analysis!

DISTRIBUTION: WHITE (ACCOMPANIES SAMPLE) YELLOW (FIELD COPY) PINK (FILE COPY)

4/02R
FORM NO. TINUS-001

TETRA TECH NUS, INC.

CTO: 0279

CHAIN OF CUSTODY | NUMBER 0973 | PAGE 1 OF 1

PROJECT NO:	FACILITY:	PROJECT MANAGER	PHONE NUMBER	LABORATORY NAME AND CONTACT:
9060	NSWC CRANE	RALPH BASINSKI	(412) 921-8308	LAUCKS / HUGH PRENTICE
SAMPLERS (SIGNATURE)		FIELD OPERATIONS LEADER	PHONE NUMBER	ADDRESS
Terry Rojahn		TERRY ROJAHN	(412) 921-8857	940 SOUTH HARNEY ST.
		CARRIER/WAYBILL NUMBER		CITY, STATE
		FED. EX. AB# 8316 7332 7214		SEATTLE, WA 98108

STANDARD TAT ☒
RUSH TAT ☐
☐ 24 hr. ☐ 48 hr. ☐ 72 hr. ☐ 7 day ☐ 14 day

DATE YEAR 2003	TIME	SAMPLE ID	LOCATION ID	TOP DEPTH (FT)	BOTTOM DEPTH (FT)	MATRIX (GW, SO, SW, SD, QC, ETC.)	COLLECTION METHOD GRAP (G) COMP (C)	No. OF CONTAINERS	EXPLOSIVES 8330	Total Metals & HG 6020	Dissolved Metals & HG 6020 / 7470A	Ammonia & Nitrate 350.1 / 353.2	SVOC 8270C	SVOC SIM	SVOC 8151A		COMMENTS
CONTAINER TYPE PLASTIC (P) or GLASS (G)									G	P	P	P	G	G	G		
PRESERVATIVE USED									4°C	4°C/HNO3	4°C/HNO3	4°C/H2SO4	4°C	4°C	4°C		
3/29	1030	13SW0101	13SW01	-	-	SW	G	4	2	1	-	1					
3/29	1030	13SW0101F	13SW01	-	-	SW	G	1	-	-	1	-					
3/29	1100	13SW0201	13SW02	-	-	SW	G	4	2	1	-	1					
3/29	1100	13SW0201F	13SW02	-	-	SW	G	1	-	-	1	-					
3/29	1420	13SW0301	13SW03	-	-	SW	G	4	2	1	-	1					
3/29	1420	13SW0301F	13SW03	-	-	SW	G	1	-	-	1	-					
3/29	1440	13SW0401	13SW04	-	-	SW	G	10	2	1	-	1	2	2	2		
3/29	1440	13SW0401F	13SW04	-	-	SW	G	1	-	-	1	-					
3/29	1510	13SW0501	13SW05	-	-	SW	G	10	2	1	-	1	2	2	2		
3/29	1510	13SW0501F	13SW05	-	-	SW	G	1	-	-	1	-					
3/29	1535	13SW0601	13SW06	-	-	SW	G	10	2	1	-	1	2	2	2		
3/29	1535	13SW0601F	13SW06	-	-	SW	G	1	~~2~~ 1	-	1	-					
3/29	1555	13SW0701	13SW07	-	-	SW	G	4	2	1	-	1					

	DATE	TIME		DATE	TIME
1. RELINQUISHED BY Terry Rojahn	3/31/03	1600	1. RECEIVED BY FEDERAL EXPRESS	3/31/03	1600
2. RELINQUISHED BY	DATE	TIME	2. RECEIVED BY	DATE	TIME
3. RELINQUISHED BY	DATE	TIME	3. RECEIVED BY	DATE	TIME

COMMENTS

DISTRIBUTION: WHITE (ACCOMPANIES SAMPLE) YELLOW (FIELD COPY) PINK (FILE COPY)

4/02R
FORM NO. TINUS-001

TETRA TECH NUS, INC. CHAIN OF CUSTODY NUMBER 0980 PAGE 1 OF 1

PROJECT NO:	FACILITY:	PROJECT MANAGER	PHONE NUMBER	LABORATORY NAME AND CONTACT:
9060	NSWC CRANE	RALPH BASINSKI	(412) 921-8308	LAUCKS / HUGH PRENTICE
SAMPLERS (SIGNATURE)		FIELD OPERATIONS LEADER	PHONE NUMBER	ADDRESS
Terry Rojahn		TERRY ROJAHN	(412) 921-8857	940 SOUTH HARNEY ST.
		CARRIER/WAYBILL NUMBER		CITY, STATE
		FED. EX. AB# 8316 7332 7214		SEATTLE, WA 98108

STANDARD TAT ☒
RUSH TAT ☐
☐ 24 hr. ☐ 48 hr. ☐ 72 hr. ☐ 7 day ☐ 14 day

DATE YEAR 2003	TIME	SAMPLE ID	LOCATION ID	TOP DEPTH (FT)	BOTTOM DEPTH (FT)	MATRIX (GW, SO, SW, SD, QC, ETC.)	COLLECTION METHOD GRAP (G) COMP (C)	No. OF CONTAINERS	EXPLOSIVES 8330	TOTAL METALS 6020	DISS. METALS 6020 & Hg 7470A	AMMONIA 350.1 & Hg 7470A	& Nitrate 353.2				COMMENTS
								CONTAINER TYPE PLASTIC (P) or GLASS (G)	G	P	P	P					
								PRESERVATIVE USED	4°C	4°C / HNO3	4°C / HNO3	4°C / H2SO4					
3/29	1555	135W0701F	135W07	–	–	SW	G	1	–	–	1	–					
3/29	1645	135W0901	135W09	–	–	SW	G	4	2	1	–	1					
3/29	1645	135W0901F	135W09	–	–	SW	G	1	–	–	1	–					
3/29	1700	135W1001	135W10	–	–	SW	G	4	2	1	–	1					
3/29	1700	135W1001F	135W10	–	–	SW	G	1	–	–	1	–					
3/30	0930	135W1201 RTQ	135W12	–	–	SW	G	4	2	1	–	1					
3/30	0930	135W1201F	135W12	–	–	SW	G	1	–	–	1	–					
3/30	1000	135W1301	135W13	–	–	SW	G	4	2	1	–	1					
3/30	1000	135W1301F	135W13	–	–	SW	G	1	–	–	1	–					
3/29	0000	FD03290303	QC	–	–	SW	G	4	2	1	–	1					FROM 135W1001
3/29	0000	FD03290303F	QC	–	–	SW	G	1	–	–	1	–					FROM 135W1001F

1. RELINQUISHED BY Terry Rojahn	DATE 3/31/03	TIME 1600	1. RECEIVED BY FEDERAL EXPRESS	DATE 3/31/03	TIME 1600
2. RELINQUISHED BY	DATE	TIME	2. RECEIVED BY	DATE	TIME
3. RELINQUISHED BY	DATE	TIME	3. RECEIVED BY	DATE	TIME

COMMENTS

DISTRIBUTION: WHITE (ACCOMPANIES SAMPLE) YELLOW (FIELD COPY) PINK (FILE COPY)

4/02R
FORM NO. TINUS-001

TETRA TECH NUS, INC.

CTO :0279

CHAIN OF CUSTODY | NUMBER 0975 | PAGE 1 OF 1

PROJECT NO:	FACILITY:	PROJECT MANAGER	PHONE NUMBER	LABORATORY NAME AND CONTACT:
N9060	NSWC CRANE	RALPH BASINSKI	(412) 921-8308	LAUCKS / HUGH PRENTICE
SAMPLERS (SIGNATURE)		FIELD OPERATIONS LEADER	PHONE NUMBER	ADDRESS
Terry Rojahn		TERRY ROJAHN	(412) 921-8857	940 SOUTH HARNEY ST.
		CARRIER/WAYBILL NUMBER		CITY, STATE
		FED. EX # 8316 7332 7214		SEATTLE, WA 98108

STANDARD TAT ☒
RUSH TAT ☐
☐ 24 hr. ☐ 48 hr. ☐ 72 hr. ☐ 7 day ☐ 14 day

DATE YEAR 2003	TIME	SAMPLE ID	LOCATION ID	TOP DEPTH (FT) INCHES	BOTTOM DEPTH (FT) INCHES	MATRIX (GW, SO, SW, SD, QC, ETC.)	COLLECTION METHOD GRAP (G) COMP (C)	No. OF CONTAINERS	EXPLOSIVES 8330	SVOCS 8270C, SIM, 8151A	METALS 6020 & Hg 7471A	TOC Lloyd Khan	CEC 9081	pH 9045C	AVS/SEM (DRAFT EPA METHOD)	COMMENTS
									CONTAINER TYPE PLASTIC (P) or GLASS (G)	G	G	G	G	G	G	G
									PRESERVATIVE USED	4°C	4°C	4°C	4°C	4°C	4°C	4°C
3/29	1035	135D22 0004	135D22	0	4"	SD	G	2	1	–	1	–	–	–	–	
3/29	1035	135D01 0004	135D01	0	4"	SD	G	2	1	–	1	–	–	–	–	
3/29	1105	135D02 0004	135D02	0	4"	SD	G	2	1	–	1	X	X	X	X	
3/29	1135	135D23 0004	135D23	0	4"	SD	G	2	1	–	1	–	–	–	–	
3/29	1420	135D03 0004	135D03	0	4"	SD	G	2	1	–	1	–	–	–	–	
3/29	1450	135D04 0004	135D04	0	4"	SD	G	2	1	X	1	–	–	–	–	
3/29	1515	135D05 0004	135D05	0	4"	SD	G	4	*2	*X	*2	*X	X	X	X	DO *MS/MSD
3/29	1545	135D06 0004	135D06	0	4"	SD	G	2	1	X	1	–	–	–	–	
3/29	1610	135D07 0004	135D07	0	4"	SD	G	2	1	–	1	–	–	–	–	
3/29	1620	135D08 0004	135D08	0	4"	SD	G	2	1	–	1	X	X	X	X	
3/29	1630	135D17 0004	135D17	0	4"	SD	G	2	1	–	1	X	X	X	X	
3/29	1650	135D09 0004	135D	0	4"	SD	G	2	1	–	1	–	–	–	–	
3/29	1710	135D10 0004	135D10	0	4"	SD	G	2	1	–	1	–	–	–	–	

	DATE	TIME		DATE	TIME
1. RELINQUISHED BY Terry Rojahn	3/31/03	1600	1. RECEIVED BY FEDERAL EXPRESS	3/31/03	1600
2. RELINQUISHED BY			2. RECEIVED BY		
3. RELINQUISHED BY			3. RECEIVED BY		

COMMENTS X = Additional PARAMETERS FOR ANALYSIS!

DISTRIBUTION: WHITE (ACCOMPANIES SAMPLE) YELLOW (FIELD COPY) PINK (FILE COPY)

4/02R
FORM NO. TINUS-001

TETRA TECH NUS, INC. CTO: 0279

CHAIN OF CUSTODY NUMBER 0962

PAGE 1 OF 1

PROJECT NO: 9060	FACILITY: NSWC CRANE	PROJECT MANAGER: RALPH BASINSKI	PHONE NUMBER: (412) 921-8308	LABORATORY NAME AND CONTACT: TRIANGLE / NORM HOFFA
SAMPLERS (SIGNATURE): Terry Rojahn		FIELD OPERATIONS LEADER: TERRY ROJAHN	PHONE NUMBER: (412) 921-8857	ADDRESS: 801 CAPITOLA DRIVE
		CARRIER/WAYBILL NUMBER: FED.EX. # 8316 7332 7203		CITY, STATE: DURHAM, NC 27713

STANDARD TAT ☒
RUSH TAT ☐
☐ 24 hr. ☐ 48 hr. ☐ 72 hr. ☐ 7 day ☐ 14 day

CONTAINER TYPE PLASTIC (P) or GLASS (G): G

PRESERVATIVE USED: 4°C

TYPE OF ANALYSIS: Dioxin/Furan 8290

DATE YEAR 2003	TIME	SAMPLE ID	LOCATION ID	TOP DEPTH (FT)	BOTTOM DEPTH (FT)	MATRIX (GW, SO, SW, SD, QC, ETC.)	COLLECTION METHOD GRAP (G) COMP (C)	No. OF CONTAINERS	Dioxin/Furan 8290	COMMENTS
3/27	1055	16SS060002	16SB06	0	2	SO	G	1	1	
3/27	1100	16SS070002	16SB07	0	2	SO	G	1	1	
3/27	1330	16SS080002	16SB08	0	2	SO	G	1	1	
3/27	1355	16SS090002	16SB09	0	2	SO	G	1	1	
3/27	1400	16SS100002	16SB10	0	2	SO	G	1	1	
3/27	1415	16SS160002	16SB16	0	2	SO	G	1	1	
3/27	1440	16SS150002	16SB15	0	2	SO	G	2	2	DO MS/MSD
3/27	1500	16SS140002	16SB14	0	2	SO	G	1	1	
3/27	1515	16SS110002	16SB11	0	2	SO	G	1	1	
3/27	1540	16SS170002	16SB17	0	2	SO	G	1	1	
3/27	0000	FD03270301	DUP	—	—	SO	G	1	1	FROM 16SS090002
3/27	0000	FD03270302	DUP	—	—	SO	G	1	1	FROM 16SS170002

	DATE	TIME		DATE	TIME
1. RELINQUISHED BY: Terry Rojahn	3/31/03	1600	1. RECEIVED BY: FEDERAL EXPRESS	3/31/03	1600
2. RELINQUISHED BY			2. RECEIVED BY		
3. RELINQUISHED BY			3. RECEIVED BY		

COMMENTS

DISTRIBUTION: WHITE (ACCOMPANIES SAMPLE) YELLOW (FIELD COPY) PINK (FILE COPY)

4/02R
FORM NO. TINUS-001

TETRA TECH NUS, INC.

CTO: 0279

CHAIN OF CUSTODY NUMBER 0967

PAGE 1 OF 1

PROJECT NO:	FACILITY:	PROJECT MANAGER	PHONE NUMBER	LABORATORY NAME AND CONTACT:
N9060	NSWC CKANE	R. BASINSKI	(412) 921-8308	TRIANGLE LAB / NORM HUFFA
SAMPLERS (SIGNATURE)		FIELD OPERATIONS LEADER	PHONE NUMBER	ADDRESS
Terry Rojahn		T. ROJAHN	(412) 921-8857	801 CAPITOLA DRIVE
		CARRIER/WAYBILL NUMBER		CITY, STATE
		FED. EX. # 8316 7332 7203		DURHAM, NC 27713

STANDARD TAT ☒
RUSH TAT ☐
☐ 24 hr. ☐ 48 hr. ☐ 72 hr. ☐ 7 day ☐ 14 day

CONTAINER TYPE PLASTIC (P) or GLASS (G): G

PRESERVATIVE USED: 4°C

TYPE OF ANALYSIS: DIOXIN/FURAN 8290

DATE YEAR 2003	TIME	SAMPLE ID	LOCATION ID	TOP DEPTH (FT)	BOTTOM DEPTH (FT)	MATRIX (GW, SO, SW, SD, QC, ETC.)	COLLECTION METHOD GRAP (G) COMP (C)	No. OF CONTAINERS									COMMENTS
3/28	0800	1655130002	165B13	0	2	SO	G	1	1								
3/28	0820	1655120002	165B12	0	2	SO	G	1	1								
3/28	0830	1655310002	165B31	0	2	SO	G	1	1								
3/28	0840	1655300002	165B30	0	2	SO	G	1	1								
3/28	0900	1655290002	165B29	0	2	SO	G	1	1								
3/28	0910	1655220002	165B22	0	2	SO	G	1	1								
3/28	0930	1655250002	165B25	0	2	SO	G	1	1								
3/28	0940	1655240002	165B24	0	2	SO	G	1	1								
3/28	1000	1655230002	165B23	0	2	SO	G	1	1								
3/28	1030	1655180002	165B18	0	2	SO	G	1	1								
3/28	1040	1655190002	165B19	0	2	SO	G	1	1								
3/28	1100	1655210002	165B21	0	2	SO	G	2	2								DO MS/MSD
3/28	1120	1655270002	165B27	0	2	SO	G	1	1								

	DATE	TIME		DATE	TIME
1. RELINQUISHED BY: Terry Rojahn	3/31/03	1600	1. RECEIVED BY: FEDERAL EXPRESS	3/31/03	1600
2. RELINQUISHED BY			2. RECEIVED BY		
3. RELINQUISHED BY			3. RECEIVED BY		

COMMENTS

DISTRIBUTION: WHITE (ACCOMPANIES SAMPLE) YELLOW (FIELD COPY) PINK (FILE COPY)

4/02R
FORM NO. TtNUS-001

TETRA TECH NUS, INC. CTO - 0279

CHAIN OF CUSTODY NUMBER 0971

PAGE 1 OF 1

PROJECT NO:	FACILITY:	PROJECT MANAGER	PHONE NUMBER	LABORATORY NAME AND CONTACT:
N9060	NSWC CRANE	R. BASINSKI	(412) 921-8308	TRIANGLE LAB / NORM HOFFA
SAMPLERS (SIGNATURE)		FIELD OPERATIONS LEADER	PHONE NUMBER	ADDRESS
Terry Rojahn		T. ROJAHN	(412) 921-8857	801 CAPITOLA DRIVE
		CARRIER/WAYBILL NUMBER		CITY, STATE
		FED. EX. AB# 8316 7332 7203		DURHAM, NC 27713

STANDARD TAT ☒
RUSH TAT ☐
☐ 24 hr. ☐ 48 hr. ☐ 72 hr. ☐ 7 day ☐ 14 day

CONTAINER TYPE PLASTIC (P) or GLASS (G): G

PRESERVATIVE USED: 4°C

TYPE OF ANALYSIS: DIOXIN / FURAN 8290

DATE YEAR 2003	TIME	SAMPLE ID	LOCATION ID	TOP DEPTH (FT)	BOTTOM DEPTH (FT)	MATRIX (GW, SO, SW, SD, QC, ETC.)	COLLECTION METHOD GRAP (G) COMP (C)	No. OF CONTAINERS	DIOXIN / FURAN 8290	COMMENTS
3/28	1130	165528 0002	165B28	0	2	SO	G	1	1	
3/28	1140	165520 0002	165B20	0	2	SO	G	1	1	
3/28	0000	FD03280301	—	—	—	SO	G	1	1	FROM 165523 0002

1. RELINQUISHED BY: Terry Rojahn	DATE 3/31/03	TIME 1600	1. RECEIVED BY: FEDERAL EXPRESS	DATE 3/31/03	TIME 1600
2. RELINQUISHED BY	DATE	TIME	2. RECEIVED BY	DATE	TIME
3. RELINQUISHED BY	DATE	TIME	3. RECEIVED BY	DATE	TIME

COMMENTS

DISTRIBUTION: WHITE (ACCOMPANIES SAMPLE) YELLOW (FIELD COPY) PINK (FILE COPY)

4/02R
FORM NO. TtNUS-001

TETRA TECH NUS, INC. CTO 0279

CHAIN OF CUSTODY

NUMBER 0982

PAGE 1 OF 1

PROJECT NO:	FACILITY:	PROJECT MANAGER	PHONE NUMBER	LABORATORY NAME AND CONTACT:
9060	NSWC CRANE	RALPH BASINSKI	(412) 921-8308	LAUCKS / HUGH PRENTICE
SAMPLERS (SIGNATURE)		FIELD OPERATIONS LEADER	PHONE NUMBER	ADDRESS
Terry Rojahn		TERRY ROJAHN	(412) 921-8857	940 South Harney St.
		CARRIER/WAYBILL NUMBER		CITY, STATE
		FED. EX. AB# 8316 7332 7199		SEATTLE, WA 98108

STANDARD TAT ☒
RUSH TAT ☐
☐ 24 hr. ☐ 48 hr. ☐ 72 hr. ☐ 7 day ☐ 14 day

DATE YEAR 2003	TIME	SAMPLE ID	LOCATION ID	TOP DEPTH (~~FT~~ INCHES)	BOTTOM DEPTH (~~FT~~ INCHES)	MATRIX (GW, SO, SW, SD, QC, ETC.)	COLLECTION METHOD GRAP (G) COMP (C)	No. OF CONTAINERS	SVOCS 8270 SIM, 8151A	EXPLOSIVES 8330	PICRATES	METAL & Hg 6020 7471A	TOC	CEC Lloyd KHAN	PH 9081	AVS/SEM 9045C DRAFT EPA Method	COMMENTS
CONTAINER TYPE PLASTIC (P) or GLASS (G)									G	G	G	G	G	G	G	G	
PRESERVATIVE USED									4°C	4°C	4°C	4°C	4°C	4°C	4°C	4°C	
4/1/03	1035	16SD110004	16SD11	0	4	SD	G	2	1	X	X	1					
4/1	1045	16SD020004	16SD02	0	4	SD	G	2	1	X	X	1	X	X	X	X	
4/1	1105	16SD100004	16SD10	0	4	SD	G	2	1	X	X	1					
4/1	1110	16SD040004	16SD04	0	4	SD	G	2	1	X	X	1					
4/1	1120	16SD050004	16SD05	0	4	SD	G	2	1	X	X	1					
4/1	1235	16SD080004	16SD08	0	4	SD	G	2	1	X	X	1					
4/1	1250	16SD090004	16SD09	0	4	SD	G	2	1	X	X	1	X	X	X	X	
4/1	1305	16SD060004	16SD06	0	4	SD	G	4	*2	*X	*X	*2	~~*X~~	X	X	X	*Do MS/MSD
4/1	1315	16SD030004	16SD03	0	4	SD	G	2	1	X	X	1					
4/1	0000	FD04010301	QC	0	4	QC	G	2	1	X	X	1					FROM 16SD110004
4/1	0000	FD04010302	QC	0	4	QC	G	2	1	X	X	1	~~*X~~				FROM 16SD060004

	DATE	TIME		DATE	TIME
1. RELINQUISHED BY Terry Rojahn	4/01/03	1830	1. RECEIVED BY FEDERAL EXPRESS	4/01/03	1830
2. RELINQUISHED BY	DATE	TIME	2. RECEIVED BY	DATE	TIME
3. RELINQUISHED BY	DATE	TIME	3. RECEIVED BY	DATE	TIME

COMMENTS

DISTRIBUTION: WHITE (ACCOMPANIES SAMPLE) YELLOW (FIELD COPY) PINK (FILE COPY)

4/02R
FORM NO: TtNUS-001

TETRA TECH NUS, INC. CTO: 0279 CHAIN OF CUSTODY NUMBER 0983 PAGE 1 OF 1

PROJECT NO:	FACILITY:	PROJECT MANAGER	PHONE NUMBER	LABORATORY NAME AND CONTACT:
9060	NSWC CRANE	RALPH BASINSKI	(412) 921-8308	LAUCKS / HUGH PRENTICE
SAMPLERS (SIGNATURE)		FIELD OPERATIONS LEADER	PHONE NUMBER	ADDRESS
Terry Rojahn		TERRY ROJAHN	(412) 921-8857	940 SOUTH HARNEY ST.
		CARRIER/WAYBILL NUMBER		CITY, STATE
		FED. EX AB# 8316 7332 7199		SEATTLE, WA 98108

STANDARD TAT ☒
RUSH TAT ☐
☐ 24 hr. ☐ 48 hr. ☐ 72 hr. ☐ 7 day ☐ 14 day

DATE YEAR 2003	TIME	SAMPLE ID	LOCATION ID	TOP DEPTH (FT)	BOTTOM DEPTH (FT)	MATRIX (GW, SO, SW, SD, QC, ETC.)	COLLECTION METHOD GRAB (G) COMP (C)	No. OF CONTAINERS	SVOC 8270C, SIM, 8151A	EXPLOSIVES 8330	PICRATES	Total METALS & Hg 6020 7470A	Diss. METALS & Hg 6020 7470A	AMMONIA & NITRATE 350.1 353.2			COMMENTS
CONTAINER TYPE PLASTIC (P) or GLASS (G)									G	G	G	P	P	P			
PRESERVATIVE USED									4°C	4°C	4°C	4°C / HNO_3	4°C / HNO_3	4°C / H_2SO_4			
4/1	1400	16SW0101	16SW01	–	–	SW	G	12	6	2	2	1	–	1			
4/1	1400	16SW0101F	16SW01	–	–	SW	G	1	–	–	–	–	1	–			

1. RELINQUISHED BY Terry Rojahn	DATE 4/01/03	TIME 1830	1. RECEIVED BY FEDERAL EXPRESS	DATE 4/01/03	TIME 1830
2. RELINQUISHED BY	DATE	TIME	2. RECEIVED BY	DATE	TIME
3. RELINQUISHED BY	DATE	TIME	3. RECEIVED BY	DATE	TIME

COMMENTS

DISTRIBUTION: WHITE (ACCOMPANIES SAMPLE) YELLOW (FIELD COPY) PINK (FILE COPY)

4/02R
FORM NO. TtNUS-001

TETRA TECH NUS, INC. CTO: 0279

CHAIN OF CUSTODY | NUMBER 0984 | PAGE 1 OF 1

PROJECT NO: 9060	FACILITY: NSWC CRANE	PROJECT MANAGER: RALPH BASINSKI	PHONE NUMBER: (412) 921-8308	LABORATORY NAME AND CONTACT: LAUCKS / HUGH PRENTICE
SAMPLERS (SIGNATURE): Terry Rojahn		FIELD OPERATIONS LEADER: TERRY ROJAHN	PHONE NUMBER: (412) 921-8857	ADDRESS: 940 SOUTH HARNEY ST.
		CARRIER/WAYBILL NUMBER: FED. EX AB # 8316 7332 7063		CITY, STATE: SEATTLE, WA 98108

STANDARD TAT ☒
RUSH TAT ☐ ☐ 24 hr. ☐ 48 hr. ☐ 72 hr. ☐ 7 day ☐ 14 day

DATE YEAR 2003	TIME	SAMPLE ID	LOCATION ID	TOP DEPTH (FT)	BOTTOM DEPTH (FT)	MATRIX (GW, SO, SW, SD, QC, ETC.)	COLLECTION METHOD GRAP (G) COMP (C)	No. OF CONTAINERS	SVOC 8270C	SVOC SIM	SVOC PCBS 8151A	EXPLOSIVES 8082	EXPLOSIVES 8330	METALS & PICRATES 6020	Hg 7470A	VOCS 8260B	VOCS 8015B	COMMENTS
CONTAINER TYPE PLASTIC (P) or GLASS (G)									G	G	G	G	G	G	P	G		
PRESERVATIVE USED									4°C	4°C	4°C	4°C	4°C	4°C	4°C/HNO3	4°C/HCl		
4/7	1615	RB04070301	QC	—	—	QC	G	13	2	2	2	2	2	2	1	—		S.S. MIXING BOWL
4/7	1630	RB04070302	QC	—	—	QC	G	13	2	2	2	2	2	2	1	—		DIS. TROWEL
4/9	0700	TB04090301	QC	—	—	QC	G	3	—	—	—	—	—	—	—	2	1	TRIP BLANK
4/9	1230	RB04090301	QC	—	—	QC	G	16	2	2	2	2	2	2	1	2	1	SLEEVE

	DATE	TIME		DATE	TIME
1. RELINQUISHED BY: Terry Rojahn	4/9/03	1900	1. RECEIVED BY: FEDERAL EXPRESS	4/9/03	1900
2. RELINQUISHED BY			2. RECEIVED BY		
RELINQUISHED BY			3. RECEIVED BY		

ENTS

TION: WHITE (ACCOMPANIES SAMPLE) YELLOW (FIELD COPY) PINK (FILE COPY)

4/02R
FORM NO. TtNUS-001

TETRA TECH NUS, INC. CHAIN OF CUSTODY NUMBER 0985 PAGE 1 OF 1

CTO: 0279

PROJECT NO:	FACILITY:	PROJECT MANAGER	PHONE NUMBER	LABORATORY NAME AND CONTACT:
9060	NSWC CRANE	RALPH BASINSKI	(412) 921-8308	TRIANGLE / NORM HUFFA
SAMPLERS (SIGNATURE)		FIELD OPERATIONS LEADER	PHONE NUMBER	ADDRESS
Terry Rojahn		TERRY ROJAHN	(412) 921-8857	801 CAPITOLA DRIVE
		CARRIER/WAYBILL NUMBER		CITY, STATE
		FED. EX AB# 8316 7332 7177		DURHAM, NC 27713

STANDARD TAT ☒
RUSH TAT ☐
☐ 24 hr. ☐ 48 hr. ☐ 72 hr. ☐ 7 day ☐ 14 day

CONTAINER TYPE PLASTIC (P) or GLASS (G): G

PRESERVATIVE USED: 4°C

DATE YEAR 2003	TIME	SAMPLE ID	LOCATION ID	TOP DEPTH (FT)	BOTTOM DEPTH (FT)	MATRIX (GW, SO, SW, SD, QC, ETC.)	COLLECTION METHOD GRAP (G) COMP (C)	No. OF CONTAINERS	TYPE OF ANALYSIS: DIOXINS/FURANS 8290								COMMENTS
4/7	1615	RB04070301	QC	–	–	QC	G	2	2								S.S. MIXING BOWL
4/7	1630	RB04070302	QC	–	–	QC	G	2	2								DIS. TROWEL
4/9	1000	1655330002	165B33	0	2	SO	G	1	1								
4/9	1015	1655320002	165B32	0	2	SO	G	1	1								
4/9	1038	1655260002	165B26	0	2	SO	G	1	1								
4/9	1230	RB04090301	QC	–	–	QC	G	2	2								CORE SLEEVE
4/10	1210	1355140001	135B14	0	1	SO	G	1	1								

	DATE	TIME		DATE	TIME
1. RELINQUISHED BY Terry Rojahn	4/10/03	1900	1. RECEIVED BY FEDERAL EXPRESS	4/10/03	1900
2. RELINQUISHED BY	DATE	TIME	2. RECEIVED BY	DATE	TIME
3. RELINQUISHED BY	DATE	TIME	3. RECEIVED BY	DATE	TIME

COMMENTS

DISTRIBUTION: WHITE (ACCOMPANIES SAMPLE) YELLOW (FIELD COPY) PINK (FILE COPY)

4/02R
FORM NO. TtNUS-001

TETRA TECH NUS, INC. CTO-0279 CHAIN OF CUSTODY | NUMBER 0986 | PAGE 1 OF 1

PROJECT NO: 9060	FACILITY: NSWC CRANE	PROJECT MANAGER: RALPH BASINSKI	PHONE NUMBER: (412) 921-8308	LABORATORY NAME AND CONTACT: LAUCKS / HUGH PRENTICE
SAMPLERS (SIGNATURE): Terry Rojahn, Robert Balkovec		FIELD OPERATIONS LEADER: TERRY ROJAHN	PHONE NUMBER: (412) 921-8857	ADDRESS: 940 SOUTH HARNEY ST
		CARRIER/WAYBILL NUMBER: FED. EX AB# 8316 7332 7063		CITY, STATE: SEATTLE, WA 98108

STANDARD TAT ☒
RUSH TAT ☐
☐ 24 hr. ☐ 48 hr. ☐ 72 hr. ☐ 7 day ☐ 14 day

CONTAINER TYPE PLASTIC (P) or GLASS (G): P P G G G G
PRESERVATIVE USED: 4°C 4°C 4°C 4°C 4°C 4°C

DATE YEAR 2003	TIME	SAMPLE ID	LOCATION ID	TOP DEPTH (FT)	BOTTOM DEPTH (FT)	MATRIX (GW, SO, SW, SD, QC, ETC.)	COLLECTION METHOD GRAB (G) COMP (C)	No. OF CONTAINERS	VOCS ENCORE 82608	VOCS ENCORE 8015B	SVOC 8270C/SIM/8151A	PCBS 8082	EXPLOSIVES 8330 & PICRATES	METALS 6020 & Hg 7471A			COMMENTS
4/9	0930	165S360002	165B36	0	2	SO	G	2	3	2	1	–	X	1			
4/9	0940	165B360203	165B36	2	3	SO	G	2	3	–	1	–	X	1			
4/9	0947	165S340002	165B34	0	2	SO	G	7	3	2	1	–	X	1			
4/9	0953	165B340203	165B34	2	3	SO	G	2	–	–	1	–	X	1			
4/9	1000	165S330002	165B33	0	2	SO	G	7	3	2	1	X	X	1			
4/9	1005	165B330204	165B33	2	4	SO	G	2	–	–	1	–	X	1			
4/9	1015	165S320002	165B32	0	2	SO	G	7	3	2	1	X	X	1			
4/9	1020	165B320204	165B32	2	4	SO	G	2	–	–	1	–	X	1			
4/9	1038	165S260002	165B26	0	2	SO	G	19	9	6	2	X	X	2			DO MS/MSD
4/9	1045	165B260204	165B26	2	4	SO	G	4	–	–	2	–	X	2			DO MS/MSD
4/9	0000	FD04090301	QC	–	–	QC	G	1	–	–	–	1	–	–			FROM 165S320002
4/9	0000	FD04090302	QC	–	–	QC	G	7	3	2	1	X	X	1			FROM 165S260002
4/9	0000	FD04090303	QC	–	–	QC	G	2	–	–	1	–	X	1			FROM 165B260204

	DATE	TIME		DATE	TIME
1. RELINQUISHED BY: Terry Rojahn	4/9/03	1900	1. RECEIVED BY: FEDERAL EXPRESS	4/9/03	1900
2. RELINQUISHED BY	DATE	TIME	2. RECEIVED BY	DATE	TIME
3. RELINQUISHED BY	DATE	TIME	3. RECEIVED BY	DATE	TIME

COMMENTS

DISTRIBUTION: WHITE (ACCOMPANIES SAMPLE) YELLOW (FIELD COPY) PINK (FILE COPY)

4/02R
FORM NO. TINUS-001

TERRA TECH NUS, INC. CTO: 0279 CHAIN OF CUSTODY NUMBER 0987 PAGE 1 OF 1

PROJECT NO:	FACILITY:	PROJECT MANAGER	PHONE NUMBER	LABORATORY NAME AND CONTACT:
N9060	NSWC CRANE	RALPH BASINSKI	(412) 921-8308	LAUCKS / HUGH PRENTICE
SAMPLERS (SIGNATURE)		FIELD OPERATIONS LEADER	PHONE NUMBER	ADDRESS
Terry Rojahn		TERRY ROJAHN	(412) 921-8857	940 SOUTH HARNEY ST.
		CARRIER/WAYBILL NUMBER		CITY, STATE
		FED. EX. AB# 8316 7332 7166		SEATTLE, WA 98108

STANDARD TAT ☒
RUSH TAT ☐
☐ 24 hr. ☐ 48 hr. ☐ 72 hr. ☐ 7 day ☐ 14 day

CONTAINER TYPE PLASTIC (P) or GLASS (G): G/P, G/P, G, G

PRESERVATIVE USED: 4°C, 4°C, 4°C, 4°C

TYPE OF ANALYSIS

DATE YEAR 2003	TIME	SAMPLE ID	LOCATION ID	TOP DEPTH (FT)	BOTTOM DEPTH (FT)	MATRIX (GW, SO, SW, SD, QC, ETC.)	COLLECTION METHOD GRAP (G) COMP (C)	No. OF CONTAINERS	VOCS 8260B	VOCS 8015B	SVOCS (8270C, SIM, & 8151A)	PCBs (8082)					COMMENTS
4/10	0800	T804100301	QC	—	—	QC	G	3	2	1							Glass 40ml Vial Trip Blank w/HCl
4/10	1210	135S140001	135B14	0	1	SO	G	2	—	—	2	X					
4/10	1230	135S~~09~~15 0002 (TR)	135B09	0	2	SO	G	5	3	2							Plastic Encore
4/10	1235	13SB~~09~~15 0204 (TR)	135B09	2	4	SO	G	5	3	2							Plastic Encore

1. RELINQUISHED BY Terry Rojahn	DATE 4/10/03	TIME 1900	1. RECEIVED BY FEDERAL EXPRESS	DATE 4/14/03	TIME 1900
2. RELINQUISHED BY	DATE	TIME	2. RECEIVED BY	DATE	TIME
3. RELINQUISHED BY	DATE	TIME	3. RECEIVED BY	DATE	TIME

COMMENTS X = Additional Parameters to Analyze!

DISTRIBUTION: WHITE (ACCOMPANIES SAMPLE) YELLOW (FIELD COPY) PINK (FILE COPY)

4/02R
FORM NO. TINUS-001

TETRA TECH NUS, INC. CTO: 0279

CHAIN OF CUSTODY | NUMBER 0969 | PAGE 1 OF 1

PROJECT NO:	FACILITY:	PROJECT MANAGER	PHONE NUMBER	LABORATORY NAME AND CONTACT:
N9060	NSWC CRANE	R. BASINSKI	(412) 921-8308	LAUCKS / HUGH PRENTICE
SAMPLERS (SIGNATURE)		FIELD OPERATIONS LEADER	PHONE NUMBER	ADDRESS
Terry Rojahn		T. ROJAHN	(412) 921-8857	940 SOUTH HARNEY ST
		CARRIER/WAYBILL NUMBER		CITY, STATE
		FED. EX. # 8316 7332 7166		SEATTLE, WA 98108

STANDARD TAT ☒
RUSH TAT ☐
☐ 24 hr. ☐ 48 hr. ☐ 72 hr. ☐ 7 day ☐ 14 day

DATE YEAR 2003	TIME	SAMPLE ID	LOCATION ID	TOP DEPTH (FT)	BOTTOM DEPTH (FT)	MATRIX (GW, SO, SW, SD, QC, ETC.)	COLLECTION METHOD GRAB (G) COMP (C)	No. OF CONTAINERS	SVOC (8270C, SIM & 8151A) & ~~PCB (8082)~~	EXPLOSIVES 8330	PICRATES	Total Metals & Hg 6020 7470A	Diss. Metals & Hg 6020 7470A	Ammonia & Nitrate 350.1 353.2	SVOCs & Explosives (Extra Vol. For MS/MSD)		COMMENTS
CONTAINER TYPE PLASTIC (P) or GLASS (G)									G	G	G	P	P	P	G		
PRESERVATIVE USED									4°C	4°C	4°C	4°C / HNO3	4°C / HNO3	4°C / H2SO4	4°C		
4/10	0850	16SW0201	16SW02	–	–	SW	G	30	6	2	2	3	–	3	14		DO MS/MSD
4/10	~~1330~~ 0850	16SW0201F	"	–	–	SW	G	3	–	–	–	–	3	–	–		DO MS/MSD
4/10	0000	FD04100301	DUP	–	–	SW	G	12	6	2	2	1	–	1			FROM 16SW0701
4/10	0000	FD04100301F	DUP	–	–	SW	G	1	–	–	–	–	1	–			FROM 16SW0701F
4/10	1330	16SW0701	16SW07	–	–	SW	G	12	6	2	2	1	–	1			
4/10	1330	16SW0701F	16SW07	–	–	SW	G	1	–	–	–	–	1	–			

1. RELINQUISHED BY Terry Rojahn	DATE 4/10/03	TIME 1900	1. RECEIVED BY FEDERAL EXPRESS	DATE 4/10/03	TIME 1900
2. RELINQUISHED BY	DATE	TIME	2. RECEIVED BY	DATE	TIME
3. RELINQUISHED BY	DATE	TIME	3. RECEIVED BY	DATE	TIME

COMMENTS

DISTRIBUTION: WHITE (ACCOMPANIES SAMPLE) YELLOW (FIELD COPY) PINK (FILE COPY)

4/02R
FORM NO. TINUS-001

TETRA TECH NUS, INC. CTO: 0279

CHAIN OF CUSTODY

NUMBER 0988

PAGE 1 OF 1

PROJECT NO:	FACILITY:	PROJECT MANAGER	PHONE NUMBER	LABORATORY NAME AND CONTACT:
9060	NSWC CRANE	RALPH BASINSKI	(412) 921-8308	LAUCKS / HUGH PRENTICE
SAMPLERS (SIGNATURE)		FIELD OPERATIONS LEADER	PHONE NUMBER	ADDRESS
Terry Rojahn		TERRY ROJAHN	(412) 921-8857	940 SOUTH HARNEY ST.
		CARRIER/WAYBILL NUMBER		CITY, STATE
		FED. EX AB# 8316 7332 7155		SEATTLE, WA 98108

STANDARD TAT ☒
RUSH TAT ☐
☐ 24 hr. ☐ 48 hr. ☐ 72 hr. ☐ 7 day ☐ 14 day

CONTAINER TYPE PLASTIC (P) or GLASS (G): G G G G G G G P P

PRESERVATIVE USED: 4°C/HCl, 4°C/HCl, 4°C, 4°C, 4°C, 4°C, 4°C, 4°C/HNO3, 4°C/H2SO4

DATE YEAR 2003	TIME	SAMPLE ID	LOCATION ID	TOP DEPTH (FT)	BOTTOM DEPTH (FT)	MATRIX (GW, SO, SW, SD, QC, ETC.)	COLLECTION METHOD GRAP (G) COMP (C)	No. OF CONTAINERS	VOCs 8260B	VOCs 8015B	SVOCs 8270C	SVOCs SIM	SVOCs 8151A	EXPLOSIVES 8330	EXPLOSIVES PICRATES	METALS 6020 & Hg 7470A	AMMONIA & NITRATES 350.1 353.2	COMMENTS
4/22	0700	TB0422 0301	QC	NA	NA	QC	G	3	2	1								TRIP BLANK
4/22	0800	16GWT0101	16MW T01	NA	NA	GW	G	4	2	2								
4/22	0946	16GWT0201	16MW T02	NA	NA	GW	G	17	3	2	2	2	2	2	2	1	1	
4/22	1045	16GW0501	WES-14 05-83	NA	NA	GW	G	*45	9	6	2	2	2	2	2	3	3	*DO MS/MSD
4/22	1437	16GWT0401	16MW T04	NA	NA	GW	G	17	3	2	2	2	2	2	2	1	1	
4/22	1630	RB0422 0301	QC	NA	NA	QC	G	17	3	2	2	2	2	2	2	1	1	TEFLON TUBING ETC. RINSATE
4/23	0811	16GW0401	WES-14 04-83	NA	NA	GW	G	17	3	2	2	2	2	2	2	1	1	
4/23	1130	16GW0101	WES-14 01-83	NA	NA	GW	G	17	3	2	2	2	2	2	2	1	1	

	DATE	TIME		DATE	TIME
1. RELINQUISHED BY Terry Rojahn	4/23/03	1900	1. RECEIVED BY FEDERAL EXPRESS	4/23/03	1900
2. RELINQUISHED BY			2. RECEIVED BY		
3. RELINQUISHED BY			3. RECEIVED BY		

COMMENTS * 14 additional Glass Amber 1L Bottles for Additional Volume for SVOCs & Explosives (MS/MSD)

DISTRIBUTION: WHITE (ACCOMPANIES SAMPLE) YELLOW (FIELD COPY) PINK (FILE COPY)

4/02R
FORM NO. TtNUS-001

TETRA TECH NUS, INC. CTO: 0279 | CHAIN OF CUSTODY | NUMBER 0991 | PAGE 1 OF 1

PROJECT NO: 9060	FACILITY: NSWC CRANE	PROJECT MANAGER: RALPH BASINSKI	PHONE NUMBER: (412) 921-8308	LABORATORY NAME AND CONTACT: LAUCKS / HUGH PRENTICE
SAMPLERS (SIGNATURE): Terry Rojahn		FIELD OPERATIONS LEADER: TERRY ROJAHN	PHONE NUMBER: (412) 921-8857	ADDRESS: 940 SOUTH HARNEY STREET
		CARRIER/WAYBILL NUMBER: FED. EX. AB# 8316 7332 7144		CITY, STATE: SEATTLE, WA 98108

STANDARD TAT ☒
RUSH TAT ☐
☐ 24 hr. ☐ 48 hr. ☐ 72 hr. ☐ 7 day ☐ 14 day

DATE YEAR 2003	TIME	SAMPLE ID	LOCATION ID	TOP DEPTH (FT)	BOTTOM DEPTH (FT)	MATRIX (GW, SO, SW, SD, QC, ETC.)	COLLECTION METHOD GRAP (G) COMP (C)	No. OF CONTAINERS	VOCs 82608	VOCs 8015B	SVOCs 8270C SIM, 8151A	Explosives 8330	Explosives PICRATES	Ammonia & Nitrates 350.1 353.2	Metals 6020 Hg 7470A	Diss Metals 6020 & Hg 7470A	COMMENTS
								CONTAINER TYPE PLASTIC (P) or GLASS (G)	G	G	G	G	G	G	P	P	
								PRESERVATIVE USED	HCl/4°C	HCl/4°C	4°C	4°C	4°C	H_2SO_4/4°C	HNO_3/4°C	HNO_3/4°C	
4/24	0800	TB04240301	QC	NA	NA	QC	G	3	2	1							TRIP BLANK
4/24	0830	RB04240301	QC	NA	NA	QC	G	17	3	2	6	2	2	1	1	–	BLADDER PUMP & TEFLON TUBING
4/24	0830	RB04240301-F	QC	NA	NA	QC	G	1	–	–	–	–	–	–	–	1	↓
4/24	1201	16GW0201	WES-14 02-83	NA	NA	GW	G	17	3	2	6	2	2	1	1	–	
4/24	1300	16GWT0501	16MW T05	NA	NA	GW	G	17	3	2	6	2	2	1	1	–	
4/24	1632	16GW0301	WES-14 03-83	NA	NA	GW	G	17	3	2	6	2	2	1	1	–	
4/24	0000	FD04240301	QC	NA	NA	GW	G	17	3	2	6	2	2	1	1	–	
4/25	0810	RB04250301	QC	NA	NA	QC ~~GW~~ (FB)	G	4	–	–	–	2	–	1	1	–	PE & silicon Tubing RINSATE
4/25	0810	RB04250301-F	QC	NA	NA	QC ~~GW~~ (FB)	G	1	–	–	–	–	–	–	–	1	↓
4/25	1022	13GWT2601	13MW T26	NA	NA	GW	G	4	–	–	–	2	–	1	1	–	
4/25	1135	16GWT0301	16MW T03	NA	NA	GW	G	17	3	2	6	2	2	1	1	–	
4/25	1346	13GWT2101	13MW T21	NA	NA	GW	G	4	–	–	–	2	–	1	1	–	
4/25	0000	FD04250301	QC	NA	NA	GW	G	4	–	–	–	2	–	1	1	–	

1. RELINQUISHED BY: Terry Rojahn	DATE: 4/25/03	TIME: 1900	1. RECEIVED BY: FEDERAL EXPRESS	DATE: 4/25/03	TIME: 1900
2. RELINQUISHED BY	DATE	TIME	2. RECEIVED BY	DATE	TIME
3. RELINQUISHED BY	DATE	TIME	3. RECEIVED BY	DATE	TIME

COMMENTS

DISTRIBUTION: WHITE (ACCOMPANIES SAMPLE) YELLOW (FIELD COPY) PINK (FILE COPY)

4/02R
FORM NO. TtNUS-001

TETRA TECH NUS, INC. CTO: 0279 CHAIN OF CUSTODY NUMBER 0992 PAGE 1 OF 1

PROJECT NO:	FACILITY:	PROJECT MANAGER	PHONE NUMBER	LABORATORY NAME AND CONTACT:
9060	NSWC CRANE	RALPH BASINSKI	(412) 921. 8308	LADICKS / HUGH PRENTICE
SAMPLERS (SIGNATURE)		FIELD OPERATIONS LEADER	PHONE NUMBER	ADDRESS South
Terry Rojahn, Robert Bulkner		TERRY ROJAHN	(412) 921-8857	940 HARKNEY STREET
		CARRIER/WAYBILL NUMBER		CITY, STATE
		FED. EX. AB# 8316 7332 7133		SEATTLE, WA 98108

STANDARD TAT ☒
RUSH TAT ☐
☐ 24 hr. ☐ 48 hr. ☐ 72 hr. ☐ 7 day ☐ 14 day

DATE YEAR 2003	TIME	SAMPLE ID	LOCATION ID	TOP DEPTH (FT)	BOTTOM DEPTH (FT)	MATRIX (GW, SO, SW, SD, QC, ETC.)	COLLECTION METHOD GRAB (G) COMP (C)	No. OF CONTAINERS	Explosives (8330)	Ammonia & Nitrates 350.1 & 353.2	Total Metals 6020 & Hg 7470A	Diss. Metals 6020 & Hg 7470A					COMMENTS
								CONTAINER TYPE PLASTIC (P) or GLASS (G)	G	P	P	P					
								PRESERVATIVE USED	4°C	4°C/H2SO4	4°C/HNO3	4°C/HNO3					
4/26	1024	13GWT0101	13MW T01	NA	NA	GW	G	4	2	1	1	–					
4/26	1230	13GWT2501	13MW T25	NA	NA	GW	G	1	1								MIN. VOLUME
4/26	1146 ~~1536~~	13GWT0301	13MW T03	NA	NA	GW	G	4	2	1	1	–					
4/26	1146	13GWT0301-F	13MW T03	NA	NA	GW	G	1	–	–	–	1					
4/26	1536	13GWT0201	13MW T02	NA	NA	GW	G	4	2	1	1	–					
4/26	1545	13GWT0801	13MW T08	NA	NA	GW	G	4	2	1	1	–					
4/27	0835	13GWT0601	13MW T06	NA	NA	GW	G	1	1								MIN. VOLUME
4/27	0910	13GWT0501	13MW T05	NA	NA	GW	G	4	2	1	1	–					
4/27	0910	13GWT0501-F	13MW T05	NA	NA	GW	G	1	–	–	–	1					
4/27	1051	13GWT0401	13MW T04	NA	NA	GW	G	4	2	1	1	–					
4/27	1200	13GWT0701	13MW T07	NA	NA	GW	G	4	2	1	1	–					
4/27	1506	13GWT1101	13MW T11	NA	NA	GW	G	4	2	1	1	–					
4/27	1710	13GWT1201	13MW T12	NA	NA	GW	G	4	2	1	1	–					

1. RELINQUISHED BY Terry Rojahn	DATE 4/28/03	TIME 1900	1. RECEIVED BY FEDERAL EXPRESS	DATE 4/28/03	TIME 1900
2. RELINQUISHED BY	DATE	TIME	2. RECEIVED BY	DATE	TIME
3. RELINQUISHED BY	DATE	TIME	3. RECEIVED BY	DATE	TIME

COMMENTS

DISTRIBUTION: WHITE (ACCOMPANIES SAMPLE) YELLOW (FIELD COPY) PINK (FILE COPY)

4/02R
FORM NO. TtNUS-001

TETRA TECH NUS, INC. CTO:0279

CHAIN OF CUSTODY

NUMBER 0993

PAGE 1 OF 1

PROJECT NO:	FACILITY:	PROJECT MANAGER	PHONE NUMBER	LABORATORY NAME AND CONTACT:
9060	NSWC CRANE	RALPH BASINSKI	(412) 921-8308	LAUCKS / HUGH PRENTICE
SAMPLERS (SIGNATURE)		FIELD OPERATIONS LEADER	PHONE NUMBER	ADDRESS
		TERRY ROJAHN	(412) 921-8857	940 SOUTH HARNEY STREET
		CARRIER/WAYBILL NUMBER		CITY, STATE
		FED. EX. AB # 8316 7332 7133		SEATTLE, WA 98108

STANDARD TAT ☒
RUSH TAT ☐
☐ 24 hr. ☐ 48 hr. ☐ 72 hr. ☐ 7 day ☐ 14 day

CONTAINER TYPE PLASTIC (P) or GLASS (G): G P P P

PRESERVATIVE USED: 4°C | 4°C/H2SO4 | 4°C/HNO3 | 4°C/HNO3

TYPE OF ANALYSIS

DATE YEAR 2003	TIME	SAMPLE ID	LOCATION ID	TOP DEPTH (FT)	BOTTOM DEPTH (FT)	MATRIX (GW, SO, SW, SD, QC, ETC.)	COLLECTION METHOD GRAP (G) COMP (C)	No. OF CONTAINERS	Explosives (8330)	Ammonia 350.1 & Total Nitrates 353.2	Total Metals 6020 & Hg 7470A	Diss. Metals 6020 & Hg 7470A	VOCS 8260B	VOCS ~~8260B~~ (TZ)	SVOCS 8270C, SIM, 8151A	COMMENTS
4/27	1710	13GWT1201-F	13MW T12	NA	NA	GW	G	1	–	–	–	1				
4/27	1811	13GWT1001	13MW T10	NA	NA	GW	G	4	2	1	1	–				
4/28	0700	TB04280301	QC	NA	NA	QC	G	3	–	–	–	–	2	1		TRIP BLANK
4/28	0911	13GWT0901	13MW T09	NA	NA	GW	G	15	2	1	1	–	3	2	6	
4/28	0000	FD04280301	QC	NA	NA	GW	G	15	2	1	1	–	3	2	6	DUP OF 13GWT0901
4/28	1456	13GWT2401	13MW T24	NA	NA	GW	G	4	2	1	1					

		DATE	TIME		DATE	TIME
1. RELINQUISHED BY		4/28/03	1900	1. RECEIVED BY FEDERAL EXPRESS	4/28/03	1900
2. RELINQUISHED BY		DATE	TIME	2. RECEIVED BY	DATE	TIME
3. RELINQUISHED BY		DATE	TIME	3. RECEIVED BY	DATE	TIME

COMMENTS

DISTRIBUTION: WHITE (ACCOMPANIES SAMPLE) YELLOW (FIELD COPY) PINK (FILE COPY)

4/02R
FORM NO. TtNUS-001

TERRA TECH NUS, INC. CHAIN OF CUSTODY NUMBER 0994 PAGE 1 OF 1

PROJECT NO:	FACILITY:	PROJECT MANAGER	PHONE NUMBER	LABORATORY NAME AND CONTACT:
9060	NSWC CRANE	RALPH BASINSKI	(412) 921-8308	LAUCKS / HUGH PRENTICE
SAMPLERS (SIGNATURE)		FIELD OPERATIONS LEADER	PHONE NUMBER	ADDRESS
Robert Beelhover / Terry Rojahn		TERRY ROJAHN	(412) 921-8857	940 SOUTH HARNEY STREET
		CARRIER/WAYBILL NUMBER		CITY, STATE
		FED. EX. AB# 8316 7332 7122		SEATTLE, WA 98108

STANDARD TAT ☒
RUSH TAT ☐
☐ 24 hr. ☐ 48 hr. ☐ 72 hr. ☐ 7 day ☐ 14 day

CONTAINER TYPE PLASTIC (P) or GLASS (G)

PRESERVATIVE USED

TYPE OF ANALYSIS

DATE YEAR 2003	TIME	SAMPLE ID	LOCATION ID	TOP DEPTH (FT)	BOTTOM DEPTH (FT)	MATRIX (GW, SO, SW, SD, QC, ETC.)	COLLECTION METHOD GRAB (G) COMP (C)	No. OF CONTAINERS	VOCs 8260B (4°C/HCl)	VOCs 8015B (4°C/HCl)	SVOCs 8270C/SIM/8151A (4°C)	Explosives 8330 (4°C)	Ammonia 350.1 & Nitrates 353.2 (4°C)	Total Metals 6020 & Hg 7470A (4°C/H2SO4)	Diss. Metals 6020 & Hg 7470A (4°C/HNO3)	(4°C/HNO3)	COMMENTS
4/28	800	TB04280302	QC	NA	NA	QC	G	3	2	1							
4/28	0932	16GWT0601	16MW T06	NA	NA	GW	G	13	3	2	4	1	1	1	1	–	MIN. VOL.
4/28	1220	13GWT2501	13MW T25	NA	NA	GW	G	1	–	–	–	–	–	–	1	–	MIN. VOL.
4/28	1606	13GWT2001	13MW T20	NA	NA	GW	G	17	3	2	6	2	2	1	1	–	
4/28	1606	13GWT2001-F	13MW T20	NA	NA	GW	G	1	–	–	–	–	–	–	–	1	
4/28	1748	13GWT0601	13MW T06	NA	NA	GW	G	1	–	–	–	–	–	–	1	–	MIN. VOL.
4/29	0926	13GWT1401	13MW T14	NA	NA	GW	G	4	–	–	–	2	–	1	1	–	

1. RELINQUISHED BY	DATE	TIME	1. RECEIVED BY	DATE	TIME
Terry Rojahn	4/29/03	1800	FEDERAL EXPRESS	4/29/03	1800
2. RELINQUISHED BY	DATE	TIME	2. RECEIVED BY	DATE	TIME
3. RELINQUISHED BY	DATE	TIME	3. RECEIVED BY	DATE	TIME

COMMENTS

DISTRIBUTION: WHITE (ACCOMPANIES SAMPLE) YELLOW (FIELD COPY) PINK (FILE COPY)

4/02R
FORM NO. TINUS-001

TETRA TECH NUS, INC.

CHAIN OF CUSTODY

NUMBER 0995

PROJECT NO:	FACILITY:	PROJECT MANAGER	PHONE NUMBER	LABORATORY NAME AND CONTACT:
9060	NSWC CRANE	RALPH BASINSKI	(412) 921-8308	LAUCKS / HUGH PRENTICE
SAMPLERS (SIGNATURE)		FIELD OPERATIONS LEADER	PHONE NUMBER	ADDRESS
Terry Rojahn Robert Bulkovec		TERRY ROJAHN	(412) 921-8857	940 SOUTH HARNEY STREET
		CARRIER/WAYBILL NUMBER		CITY, STATE
		FED. EX. AB# 8316 7332 7074		SEATTLE, WA 98108

STANDARD TAT ☒
RUSH TAT ☐
☐ 24 hr. ☐ 48 hr. ☐ 72 hr. ☐ 7 day ☐ 14 day

CONTAINER TYPE PLASTIC (P) or GLASS (G): G P P P

PRESERVATIVE USED: 4°C | 4°C | H_2SO_4 4°C | HNO_3 4°C | HNO_3

DATE YEAR 2003	TIME	SAMPLE ID	LOCATION ID	TOP DEPTH (FT)	BOTTOM DEPTH (FT)	MATRIX (GW, SO, SW, SD, QC, ETC.)	COLLECTION METHOD GRAP (G) COMP (C)	No. OF CONTAINERS	Explosives 8330	Ammonia 350.1 & Nitrate 353.2	Total Metals 6020 & Hg 7470A	Diss. Metals 6020 & Hg 7470A					COMMENTS
5/6	0842	13GWT1601	13MW T16	NA	NA	GW	G	4	2	1	1	–					
5/6	1242	13GWT2301	13MW T23	NA	NA	GW	G	4	2	1	1	–					
5/6	1342	13GWT1801	13MW T18	NA	NA	GW	G	4	2	1	1	–					
5/6	1342	13GWT1801-F	13MW T18	NA	NA	GW	G	1	–	–	–	1					
5/6	1440	13GWT2501	13MW T25	NA	NA	GW	G	1	–	1	–	–					SLOW RECHARGE WELL
5/6	1542	13GWT2201	13MW T22	NA	NA	GW	G	4	2	1	1	–					
5/6	1735	13GWT0601-F	13MW T06	NA	NA	GW	G	1	–	–	–	1					SLOW RECHARGE WELL
5/6	1702	13GWT1501	13MW T15	NA	NA	GW	G	4	2	1	1	–					
5/7	0947	13GWT1301	13MW T13	NA	NA	GW	G	4	2	1	1	–					
5/7	1022	13GWT1701	13MW T17	NA	NA	GW	G	12	6	3	3	–					DO MS/MSD
5/7	1347	13GWT1901	13MW T19	NA	NA	GW	G	4	2	1	1	–					
5/7	0000	FD05070301	QC	NA	NA	GW	G	4	2	1	1	–					DUP FROM 13GWT1301

	DATE	TIME		DATE	TIME
1. RELINQUISHED BY: Terry Rojahn	5/07/03	1800	1. RECEIVED BY: FED. EX.	5/7/03	1800
2. RELINQUISHED BY			2. RECEIVED BY		
3. RELINQUISHED BY			3. RECEIVED BY		

COMMENTS

DISTRIBUTION: WHITE (ACCOMPANIES SAMPLE) YELLOW (FIELD COPY) PINK (FILE COPY)

4/02R
FORM NO. TtNUS-001

TETRA TECH NUS, INC. CTU-0279

CHAIN OF CUSTODY

NUMBER 0996

PROJECT NO: 9060	FACILITY: NSWC CRANE	PROJECT MANAGER: RALPH BASINSKI	PHONE NUMBER: (412) 921-8308	LABORATORY NAME AND CONTACT: LAUCKS / HUGH PRENTICE
SAMPLERS (SIGNATURE): [signature]		FIELD OPERATIONS LEADER: TERRY ROJAHN	PHONE NUMBER: (412) 921-8857	ADDRESS: 940 SOUTH HARNEY STREET
		CARRIER/WAYBILL NUMBER: FED. EX. AB# 8316 7332 7085		CITY, STATE: SEATTLE, WA 98108

STANDARD TAT ☒
RUSH TAT ☐
☐ 24 hr. ☐ 48 hr. ☐ 72 hr. ☐ 7 day ☐ 14 day

CONTAINER TYPE PLASTIC (P) or GLASS (G): G P P P

PRESERVATIVE USED: 4°C; 4°C/H2SO4; 4°C/HNO3; 4°C/HNO3

TYPE OF ANALYSIS

DATE YEAR 2003	TIME	SAMPLE ID	LOCATION ID	TOP DEPTH (FT)	BOTTOM DEPTH (FT)	MATRIX (GW, SO, SW, SD, QC, ETC.)	COLLECTION METHOD GRAP (G) COMP (C)	No. OF CONTAINERS	Explosives	Ammonia & Nitrate 8330 350.1 353.2	Total Metals & Hg 6020 7470A	Diss. Metals & Hg 6020 7470A					COMMENTS
5/7	1300	13GWT2501-F	13MW T25	NA	NA	GW	G	1	–	–	–	1					SLOW RECHARGE WELL
5/7	1700	13GWT0601	13MW T06	NA	NA	GW	G	1	–	1	–	–					↓
5/8	0910	13SW0801	13SW 08	NA	NA	SW	G	4	2	1	1	–					
5/8	0910	13SW0801-F	↓	NA	NA	SW	G	1	–	–	–	1					
5/8	0935	13SW1101	13SW 11	NA	NA	SW	G	4	2	1	1	–					
5/8	0935	13SW1101-F	↓	NA	NA	SW	G	1	–	–	–	1					

1. RELINQUISHED BY [signature]	DATE 5/8/03	TIME 1900	1. RECEIVED BY FEDERAL EXPRESS	DATE 5/8/03	TIME 1900
2. RELINQUISHED BY	DATE	TIME	2. RECEIVED BY	DATE	TIME
3. RELINQUISHED BY	DATE	TIME	3. RECEIVED BY	DATE	TIME

COMMENTS

DISTRIBUTION: WHITE (ACCOMPANIES SAMPLE) YELLOW (FIELD COPY) PINK (FILE COPY)

FORM NO. T

TETRA TECH NUS, INC. CHAIN OF CUSTODY | NUMBER 0989 | PAGE 1 OF 1

CTO-0279

PROJECT NO:	FACILITY:	PROJECT MANAGER	PHONE NUMBER	LABORATORY NAME AND CONTACT:
9060	NSWC CRANE	RALPH BASINSKI	(412) 921-8308	LAUCKS / HUGH PRENTICE
SAMPLERS (SIGNATURE): Terry Rojahn		FIELD OPERATIONS LEADER: TERRY ROJAHN	PHONE NUMBER: (412) 921-8857	ADDRESS: 940 SOUTH HARNEY STREET
		CARRIER/WAYBILL NUMBER: FED. EX. AB# 8316 7332 7096		CITY, STATE: SEATTLE, WA 98108

STANDARD TAT ☒
RUSH TAT ☐
☐ 24 hr. ☐ 48 hr. ☐ 72 hr. ☐ 7 day ☐ 14 day

CONTAINER TYPE PLASTIC (P) or GLASS (G): G
PRESERVATIVE USED: 4°C

DATE YEAR 2003	TIME	SAMPLE ID	LOCATION ID	TOP DEPTH (FT)	BOTTOM DEPTH (FT)	MATRIX (GW, SO, SW, SD, QC, ETC.)	COLLECTION METHOD GRAP (G) COMP (C)	No. OF CONTAINERS	TYPE OF ANALYSIS: SVOCS 8270C								COMMENTS
5/9	1000	13GWT0902	13MW T09	NA	NA	GW	G	2	2								
5/9	1505	13GWT2002	13MW T20	NA	NA	GW	G	2	2								
5/9	0000	FD05090301	QC	NA	NA	GW	G	2	2								FROM 13GWT0902

1. RELINQUISHED BY: Terry Rojahn	DATE 5/9/03	TIME 1800	1. RECEIVED BY: FEDERAL EXPRESS	DATE 5/9/03	TIME 1800
2. RELINQUISHED BY	DATE	TIME	2. RECEIVED BY	DATE	TIME
3. RELINQUISHED BY	DATE	TIME	3. RECEIVED BY	DATE	TIME

COMMENTS

DISTRIBUTION: WHITE (ACCOMPANIES SAMPLE) YELLOW (FIELD COPY) PINK (FILE COPY)

4/02R
FORM NO. TtNUS-001

TETRA TECH NUS, INC. CTO-0279

CHAIN OF CUSTODY | NUMBER 0997 | PAGE 1 OF 1

PROJECT NO: 9060	FACILITY: NSWC CRANE	PROJECT MANAGER: RALPH BASINSKI	PHONE NUMBER: (412) 921-8308	LABORATORY NAME AND CONTACT: LAUCKS / HUGH PRENTICE
SAMPLERS (SIGNATURE): Robert Balkner		FIELD OPERATIONS LEADER: TERRY ROJAHN	PHONE NUMBER: (412) 921-8857	ADDRESS: 940 SOUTH HARNEY STREET
		CARRIER/WAYBILL NUMBER: FED. EX. AB#		CITY, STATE: SEATTLE, WA 98108

STANDARD TAT ☒
RUSH TAT ☐ ☐ 24 hr. ☐ 48 hr. ☐ 72 hr. ☐ 7 day ☐ 14 day

CONTAINER TYPE PLASTIC (P) or GLASS (G): G, P

PRESERVATIVE USED: 4°C, 4°C/HNO3

DATE YEAR 2003	TIME	SAMPLE ID	LOCATION ID	TOP DEPTH (FT)	BOTTOM DEPTH (FT)	MATRIX (GW, SO, SW, SD, QC, ETC.)	COLLECTION METHOD GRAP (G) COMP (C)	No. OF CONTAINERS	TYPE OF ANALYSIS: SVOC 8270C	TOTAL METALS & Hg 6020	7470A							COMMENTS
5/11	1310	16GWT06 02	16MW T06	NA	NA	GW	G	2	2									
5/11	1732	16GW02 02	WES-14 02-83	NA	NA	GW	G	3	2	1								

1. RELINQUISHED BY: Terry Rojahn	DATE 5/12/03	TIME 1900	1. RECEIVED BY: FEDERAL EXPRESS	DATE 5/12/03	TIME 1900
2. RELINQUISHED BY	DATE	TIME	2. RECEIVED BY	DATE	TIME
3. RELINQUISHED BY	DATE	TIME	3. RECEIVED BY	DATE	TIME

COMMENTS

DISTRIBUTION: WHITE (ACCOMPANIES SAMPLE) YELLOW (FIELD COPY) PINK (FILE COPY)

4/02R
FORM NO. TtNUS-001

APPENDIX C.4.2
SWMU 13 AND SWMU 16
CHAIN OF CUSTODY RECORDS
ROUND 2

TETRA TECH NUS, INC. CHAIN OF CUSTODY NUMBER 4801 PAGE 1 OF

PROJECT NO:	FACILITY:	PROJECT MANAGER	PHONE NUMBER	LABORATORY NAME AND CONTACT:
N90660 0279	NSWC CRANE	RALPH BASINSKI	(412) 921-8308	LAUCKS / ANH HO
SAMPLERS (SIGNATURE)		FIELD OPERATIONS LEADER	PHONE NUMBER	ADDRESS
		TERRY ROJAHN	(412) 921-8857	940 South HARNEY St.
		CARRIER/WAYBILL NUMBER		CITY, STATE
		FED EX AB# 8912 2491 1051		SEATTLE WA 98108

STANDARD TAT ☒
RUSH TAT ☐
☐ 24 hr. ☐ 48 hr. ☐ 72 hr. ☐ 7 day ☐ 14 day

DATE YEAR 2003	TIME	SAMPLE ID	LOCATION ID	TOP DEPTH (FT)	BOTTOM DEPTH (FT)	MATRIX (GW, SO, SW, SD, QC, ETC.)	COLLECTION METHOD GRAP (G) COMP (C)	No. OF CONTAINERS	Explosives SW-846 8330	Misc. Explosives SW-846 8330	Total Metals & Mercury 6020 7470A	Ds Metals & Mercury 6020 7470A	Nitrate + Nitrite & Ammonia	Selected Ion Monitoring - PAHs			COMMENTS
CONTAINER TYPE PLASTIC (P) or GLASS (G)									G	G	P	P	P	G			
PRESERVATIVE USED									4°C	4°C	4°C/HNO3	4°C/HNO3	4°C/H2SO4	4°C			
10/22	0930	13SP0101	13 SP01	-	-	SP	G	6	2	2	1	-	1	-			
10/22	0950	13SW1601	13 SW16	-	-	SW	G	6	2	2	1	-	1	-			
10/22	1033	13SP0201	13 SP02	-	-	SP	G	6	2	2	1	-	1	-			
10/22	1045	13SW1401	13 SW14	-	-	SW	G	6	2	2	1	-	1	-			
10/22	1230	13SP0301	13 SP03	-	-	SP	G	6	2	2	1	-	1	-			
10/22	1300	13SW3101	13 SW31	-	-	SW	G	6	2	2	1	-	1	-			
10/22	1330	13SP0401	13 SP04	-	-	SP	G	6	2	2	1	-	1	-			
10/22	1345	13SW2201	13 SW22	-	-	SW	G	6	2	2	1	-	1	-			
10/22	1400	13SW1302	13 SW13	-	-	SW	G	6	6	6	3	-	3	-			DO MS/MSD
10/22	1450	13SW1202	13 SW12	-	-	SW	G	6	2	2	1	-	1	-			
10/22	1538	13SW3001	13 SW30	-	-	SW	G	6	2	2	1	-	1	-			
10/22	0000	13FD10220301	QC	-	-	QC	G	6	2	2	1	-	1	-			DUP OF 13SW1401
10/22	0000	13FD10220303	QC	-	-	QC	G	6	2	2	1	-	1	-			DUP OF 13SW1302

1. RELINQUISHED BY	DATE 10/22/03	TIME 1900	1. RECEIVED BY FEDERAL EXPRESS	DATE 10/22/03	TIME 1900
2. RELINQUISHED BY	DATE	TIME	2. RECEIVED BY	DATE	TIME
3. RELINQUISHED BY	DATE	TIME	3. RECEIVED BY	DATE	TIME

COMMENTS

DISTRIBUTION: WHITE (ACCOMPANIES SAMPLE) YELLOW (FIELD COPY) PINK (FILE COPY)

4/02R
FORM NO. TtNUS-001

TETRA TECH NUS, INC.

CHAIN OF CUSTODY

NUMBER 4802

PAGE 1 OF 1

PROJECT NO:	FACILITY:	PROJECT MANAGER	PHONE NUMBER	LABORATORY NAME AND CONTACT:
CTO N9060 0279	NSWC CRANE	RALPH BASINSKI	(412) 921-8308	LAUCKS / ANN HO
SAMPLERS (SIGNATURE)		FIELD OPERATIONS LEADER	PHONE NUMBER	ADDRESS
Terry Rojahn		TERRY ROJAHN	(412) 921-8857	940 SOUTH HARNEY ST.
		CARRIER/WAYBILL NUMBER		CITY, STATE
		FED EX AB# 8412 2491 1051		SEATTLE WA 98108

STANDARD TAT ☒
RUSH TAT ☐
☐ 24 hr. ☐ 48 hr. ☐ 72 hr. ☐ 7 day ☐ 14 day

CONTAINER TYPE PLASTIC (P) or GLASS (G): P

PRESERVATIVE USED: 4°C HNO3

TYPE OF ANALYSIS: DIS. METALS & MERCURY 6020 7470A

DATE YEAR 2003	TIME	SAMPLE ID	LOCATION ID	TOP DEPTH (FT)	BOTTOM DEPTH (FT)	MATRIX (GW, SO, SW, SD, QC, ETC.)	COLLECTION METHOD GRAP (G) COMP (C)	No. OF CONTAINERS									COMMENTS
10/22	0930	13SP0101-F	13 SP01	—	—	SP	G	1	1								
10/22	0950	13SW1601-F	13 SW16	—	—	SW	G	1	1								
10/22	1033	13SP0201-F	13 SP02	—	—	SP	G	1	1								
10/22	1045	13SW1401-F	13 SW14	—	—	SW	G	1	1								
10/22	1230	13SP0301-F	13 SP03	—	—	SP	G	1	1								
10/22	1300	13SW3101-F	13 SW31	—	—	SW	G	1	1								
10/22	1330	13SP0401-F	13 SP04	—	—	SP	G	1	1								
10/22	1345	13SW2201-F	13 SW22	—	—	SW	G	1	1								
10/22	1400	13SW1302-F	13 SW13	—	—	SW	G	3	3								DO MS/MSD
10/22	1450	13SW1202-F	13 SW12	—	—	SW	G	1	1								
10/22	1538	13SW3001-F	13 SW30	—	—	SW	G	1	1								
10/22	0000	13FD10220301-F	QC	—	—	QC	G	1	1								DUP OF 13SW1401
10/22	0000	13FD10220303-F	QC	—	—	QC	G	1	1								DUP OF 13SW1302

	DATE	TIME		DATE	TIME
1. RELINQUISHED BY Terry Rojahn	10/22/03	1900	1. RECEIVED BY FEDERAL EXPRESS	10/22/03	1900
2. RELINQUISHED BY	DATE	TIME	2. RECEIVED BY	DATE	TIME
3. RELINQUISHED BY	DATE	TIME	3. RECEIVED BY	DATE	TIME

COMMENTS

DISTRIBUTION: WHITE (ACCOMPANIES SAMPLE) YELLOW (FIELD COPY) PINK (FILE COPY)

4/02R
FORM NO. TtNUS-001

TETRA TECH NUS, INC. CHAIN OF CUSTODY NUMBER 4803 PAGE 1 OF

PROJECT NO:	FACILITY:	PROJECT MANAGER	PHONE NUMBER	LABORATORY NAME AND CONTACT:
CTO N9060 0279	NSWC CRANE	RALPH BASINSKI	(412) 921-8368	LAUCKS / ANH HO
SAMPLERS (SIGNATURE)		FIELD OPERATIONS LEADER	PHONE NUMBER	ADDRESS
		TERRY ROJAHN	(412) 921-8857	940 SOUTH HARNEY ST.
		CARRIER/WAYBILL NUMBER		CITY, STATE
		FED EX AB# 841224911051		SEATTLE, WA 98108

STANDARD TAT ☒
RUSH TAT ☐
☐ 24 hr. ☐ 48 hr. ☐ 72 hr. ☐ 7 day ☐ 14 day

CONTAINER TYPE PLASTIC (P) or GLASS (G): G G

PRESERVATIVE USED: 4°C 4°C

TYPE OF ANALYSIS

DATE YEAR 2003	TIME	SAMPLE ID	LOCATION ID	TOP DEPTH (FT)	BOTTOM DEPTH (FT) INCHES	MATRIX (GW, SO, SW, SD, QC, ETC.)	COLLECTION METHOD GRAP (G) COMP (C)	No. OF CONTAINERS	Explosives & Misc. Expls.	SW-846 8330	Metals & Mercury SW-846 6020 & 7471A						COMMENTS
10/22	1240	13SD290004	13 SD29	0	4	SD	G	2	1	1							
10/22	1310	13SD310004 (TK)	13 SD31	0	4	SD	G	2	1	1							
10/22	1542	13SD300004	13 SD30	0	4	SD	G	2	1	1							
10/22	1555	13SD280004	13 SD28	0	4	SD	G	2	1	1							
10/22	0000	13FD10220302	QC	0	4	QC	G	2	1	1							DUP OF 13SD290004

1. RELINQUISHED BY	DATE 10/22/03	TIME 1900	1. RECEIVED BY FEDERAL EXPRESS	DATE 10/22/03	TIME 1900
2. RELINQUISHED BY	DATE	TIME	2. RECEIVED BY	DATE	TIME
3. RELINQUISHED BY	DATE	TIME	3. RECEIVED BY	DATE	TIME

COMMENTS

DISTRIBUTION: WHITE (ACCOMPANIES SAMPLE) YELLOW (FIELD COPY) PINK (FILE COPY)

4/02R
FORM NO. TtNUS-001

TETRA TECH NUS, INC.

CHAIN OF CUSTODY

NUMBER 4804

PROJECT NO:	FACILITY:	PROJECT MANAGER	PHONE NUMBER	LABORATORY NAME AND CONTACT:
CTO N9060 0279	NSWC CRANE	RALPH BASINSKI	(412) 921-8308	LAUCKS / ANN HO
SAMPLERS (SIGNATURE)		FIELD OPERATIONS LEADER	PHONE NUMBER	ADDRESS
		TERRY ROJAHN	(412) 921-8857	940 South HARNEY ST
		CARRIER/WAYBILL NUMBER		CITY, STATE
		FED EX AB# 8412 2491 0813		SEATTLE WA 98108

STANDARD TAT ☒
RUSH TAT ☐
☐ 24 hr. ☐ 48 hr. ☐ 72 hr. ☐ 7 day ☐ 14 day

DATE YEAR 2003	TIME	SAMPLE ID	LOCATION ID	TOP DEPTH (FT)	BOTTOM DEPTH (FT)	MATRIX (GW, SO, SW, SD, QC, ETC.)	COLLECTION METHOD GRAP (G) COMP (C)	No. OF CONTAINERS	EXPLOSIVES SW-846 8330	MISC. EXPLOSIVES SW-846 8330	TOTAL METALS & Hg 6020 7470A	NITRATE + NITRITE & AMMONIA	D.S. METALS & Hg 6020 7470A				COMMENTS
CONTAINER TYPE PLASTIC (P) or GLASS (G)									G	G	P	P	P				
PRESERVATIVE USED									4°C	4°C	4°C / HNO3	4°C / H2SO4	4°C / HNO3				
10/23	0850	13SW10 02	13 SW10	-	-	SW	G	6	2	2	1	1	-				
10/23	0850	13SW10 02-F	↓	-	-	SW	G	1	-	-	-	-	1				
10/23	0915	13SW1801	13 SW18	-	-	SW	G	6	2	2	1	1	-				
10/23	0915	13SW1801-F	↓	-	-	SW	G	1	-	-	-	-	1				
10/23	0935	13SW1901	13 SW19	-	-	SW	G	6	2	2	1	1	-				
10/23	0935	13SW1901-F	↓	-	-	SW	G	1	-	-	-	-	1				
10/23	1230	13SW0802	13 SW08	-	-	SW	G	6	2	2	1	1	-				
10/23	1230	13SW0802-F	↓	-	-	SW	G	1	-	-	-	-	1				
10/23	1315	13SW20 01	13 SW20	-	-	SW	G	6	2	2	1	1	-				
10/23	1315	13SW20 01-F	↓	-	-	SW	G	1	-	-	-	-	1				
10/23	1415	13SW2701	13 SW27	-	-	SW	G	6	2	2	1	1	-				
10/23	1415	13SW2701-F	↓	-	-	SW	G	1	-	-	-	-	1				

	DATE	TIME		DATE	TIME
1. RELINQUISHED BY Terry Rojahn	10/23/03	1830	1. RECEIVED BY FEDERAL EXPRESS	10/23/03	1830
2. RELINQUISHED BY	DATE	TIME	2. RECEIVED BY	DATE	TIME
3. RELINQUISHED BY	DATE	TIME	3. RECEIVED BY	DATE	TIME

COMMENTS

DISTRIBU[illegible] WHITE (ACCOMPANIES SAMPLE) YELLOW (FI[illegible]OPY) PINK (FILE COPY)

4/02R
FORM NO. TtNUS-001

TETRA TECH NUS, INC. CHAIN OF CUSTODY NUMBER 4805 PAGE 1 OF 1

PROJECT NO:	FACILITY:	PROJECT MANAGER	PHONE NUMBER	LABORATORY NAME AND CONTACT:
N9060 CTO 0279	NSWC CRANE	RALPH BASINSKI	(412) 921-8308	LAUCKS / ANN HO
SAMPLERS (SIGNATURE)		FIELD OPERATIONS LEADER	PHONE NUMBER	ADDRESS
		TERRY ROJAHN	(412) 921-8857	940 South HARNEY St.
		CARRIER/WAYBILL NUMBER		CITY, STATE
		FED EX AB # 8412 2491 0813		SEATTLE WA 98108

STANDARD TAT ☒
RUSH TAT ☐
☐ 24 hr. ☐ 48 hr. ☐ 72 hr. ☐ 7 day ☐ 14 day

CONTAINER TYPE PLASTIC (P) or GLASS (G): G G G
PRESERVATIVE USED: 4°C 4°C 4°C

DATE YEAR 2003	TIME	SAMPLE ID	LOCATION ID	TOP DEPTH (FT)	BOTTOM DEPTH (FT) INCHES	MATRIX (GW, SO, SW, SD, QC, ETC.)	COLLECTION METHOD GRAP (G) COMP (C)	No. OF CONTAINERS	TYPE OF ANALYSIS: Explosives & Misc. Explosives SW-846 8330	Metals & Mercury SW-846 6020 & 7471A	Selected Ion Monitoring						COMMENTS
10/23	1050	135D25 0004	135D25	0	4	SD	G	3	1	1	1						
10/23	1332	135D24 0004	13 SD24	0	4	SD	G	2	1	1							
10/23	1425	135D26 0004	13 SD26	0	4	SD	G	2	1	1							
10/23	1420	135D27 0004	13 SD27	0	4	SD	G	2	1	1							

1. RELINQUISHED BY	DATE 10/23/03	TIME 1830	1. RECEIVED BY FEDERAL EXPRESS	DATE 10/23/03	TIME 1830
2. RELINQUISHED BY	DATE	TIME	2. RECEIVED BY	DATE	TIME
3. RELINQUISHED BY	DATE	TIME	3. RECEIVED BY	DATE	TIME

COMMENTS

DISTRIBUTION: WHITE (ACCOMPANIES SAMPLE) YELLOW (FIELD COPY) PINK (FILE COPY)

4/02R
FORM NO. TtNUS-001

TETRA TECH NUS, INC. | CHAIN OF CUSTODY | NUMBER 4806 | PAGE 1 OF 1

PROJECT NO:	FACILITY:	PROJECT MANAGER	PHONE NUMBER	LABORATORY NAME AND CONTACT:
CTO N9060 0279	NSWC CRANE	RALPH BASINSKI	(412) 921-8308	LAUCKS / ANH HO
SAMPLERS (SIGNATURE)		FIELD OPERATIONS LEADER: TERRY ROJAHN	PHONE NUMBER: (412) 921-8857	ADDRESS: 940 SOUTH HARNEY ST.
		CARRIER/WAYBILL NUMBER: FED EX AB# 8412 2491 0824		CITY, STATE: SEATTLE WA 98108

STANDARD TAT ☒
RUSH TAT ☐
☐ 24 hr. ☐ 48 hr. ☐ 72 hr. ☐ 7 day ☐ 14 day

CONTAINER TYPE PLASTIC (P) or GLASS (G)

PRESERVATIVE USED: 4°C | 4°C/HCl | 4°C/HCl | 4°C | 4°C | 4°C/HNO3 | 4°C/HNO3 | 4°C/H2SO4 | 4°C

TYPE OF ANALYSIS

DATE YEAR 2003	TIME	SAMPLE ID	LOCATION ID	TOP DEPTH (FT)	BOTTOM DEPTH (FT)	MATRIX (GW, SO, SW, SD, QC, ETC.)	COLLECTION METHOD GRAB (G) COMP (C)	No. OF CONTAINERS	Volatiles SW-846 8260B	Volatiles SW-846 8015B	Explosives SW-846 8330	Misc. Explosives SW-846 8330	Total Metals SW846 6020 & Hg 7470A	Dis Metals SW846 6020 & Hg 7470A	Nitrate + Nitrite EPA 353.2	Selected Ions Monitoring	COMMENTS
10/24	0700	TB10240301	QC	–	–	QC	G	4	2	2							TRIP BLANK
10/24	0840	13SW3201	13 SW32	–	–	SW	G	6	–	–	~~2~~	~~2~~	1	–	–	6	Do MS/MSD
10/24	1030	16SW1701	13 SW17	–	–	SW	G	36	9	9	6	6	3	–	3	–	Do MS/MSD
10/24	1030	16SW1701-F	↓	–	–	SW	G	3	–	–	–	–	–	3	–	–	Do MS/MSD
10/24	1400	16SW1801	13 SW18	–	–	SW	G	12	3	3	2	2	1	–	1	–	
10/24	1400	16SW1801-F	↓	–	–	SW	G	1	–	–	–	–	–	1	–	–	
10/24	1500	16SW1401	13 SW14	–	–	SW	G	12	3	3	2	2	1	–	1	–	
10/24	1500	16SW1401-F	↓	–	–	SW	G	1	–	–	–	–	–	1	–	–	
10/24	1518	16SW2101	13 SW21	–	–	SW	G	12	3	3	2	2	1	–	1	–	
10/24	1518	16SW2101-F	↓	–	–	SW	G	1	–	–	–	–	–	1	–	–	
10/24	0000	16FD10240301	QC	–	–	SW	G	12	3	3	2	2	1	–	1	–	DUP OF 16SW1701
10/24	0000	16FD10240301-F	QC	–	–	SW	G	1	–	–	–	–	–	1	–	–	↓

1. RELINQUISHED BY	DATE	TIME	1. RECEIVED BY	DATE	TIME
Terry Rojahn	10/24/03	1830	FEDERAL EXPRESS	10/24/03	1830
2. RELINQUISHED BY	DATE	TIME	2. RECEIVED BY	DATE	TIME
3. RELINQUISHED BY	DATE	TIME	3. RECEIVED BY	DATE	TIME

COMMENTS

DISTRIBUTION: WHITE (ACCOMPANIES SAMPLE) YELLOW (FIELD COPY) PINK (FILE COPY)

4/02R
FORM NO. TINUS-001

TETRA TECH NUS, INC. CHAIN OF CUSTODY NUMBER 4807 PAGE 1 OF

PROJECT NO:	FACILITY:	PROJECT MANAGER	PHONE NUMBER	LABORATORY NAME AND CONTACT:
N9060	CTO 0279 NSWC ~~CRANE~~	RALPH BASINSKI	(412) 921-8308	LAUCKS / ANH Ho
SAMPLERS (SIGNATURE)		FIELD OPERATIONS LEADER	PHONE NUMBER	ADDRESS
		TERRY ROJAHN	(412) 921-8857	940 South HARNEY St
		CARRIER/WAYBILL NUMBER		CITY, STATE
		FED EX AB# 8412 2491 0824		SEATTLE, WA 98108

STANDARD TAT ☐
RUSH TAT ☐
☐ 24 hr. ☐ 48 hr. ☐ 72 hr. ☐ 7 day ☐ 14 day

CONTAINER TYPE PLASTIC (P) or GLASS (G)
PRESERVATIVE USED

TYPE OF ANALYSIS

DATE YEAR 2003	TIME	SAMPLE ID	LOCATION ID	TOP DEPTH (FT)	BOTTOM DEPTH (~~FT~~ INCHES)	MATRIX (GW, SO, SW, SD, QC, ETC.)	COLLECTION METHOD GRAB (G) COMP (C)	No. OF CONTAINERS	Volatiles (Encore) SW-846 8260B	Volatiles (Encore) SW 846 8015B	Volatiles SW 846 8260B	Volatiles (4oz Jar) SW 846 8015B	Explosives (4oz Jar) SW 846 8330	Metals & Misc. Exp. SW846 6020 & 7471A	Selected Ion Monitoring	COMMENTS
10/24	0850	13SD32 0004	13 SD32	0	4	SD	G	2	–	–	–	–	–	–	2	Do MS/MSD
10/24	1020	16SD19 0004	16 SD19	0	4	SD	G	8	3	3	–	–	1	1	–	
10/24	1100	16SD17 0004	16 SD17	0	4	SD	G	8	–	–	2	2	2	2	–	Do MS/MSD
10/24	1330	16SD16 0004	16 SD16	0	4	SD	G	8	3	3	–	–	1	1	–	
10/24	1410	16SD18 0004	16 SD18	0	4	SD	G	4	–	–	1	1	1	1	–	
10/24	1420	16SD15 0004	16 SD15	0	4	SD	G	4	–	–	1	1	1	1	–	
10/24	1510	16SD14 0004	16 SD14	0	4	SD	G	4	–	–	1	1	1	1	–	
10/24	1525	16SD21 0004	16 SD21	0	4	SD	G	4	–	–	1	1	1	1	–	
10/24	1611	16SD22 0004	16 SD22	0	4	SD	G	1	–	–	–	–	–	–	1	
10/24	0000	13FD10240301	QC	0	4	SD	G	1	–	–	–	–	–	–	1	DUP OF 13SD32 0004
10/24	0000	16FD10240302	QC	0	4	SD	G	4	–	–	1	1	1	1	–	DUP OF 16SD17 0004

	DATE	TIME		DATE	TIME
1. RELINQUISHED BY	10/24/01	1830	1. RECEIVED BY FEDERAL EXPRESS	10/24/03	1830
2. RELINQUISHED BY	DATE	TIME	2. RECEIVED BY	DATE	TIME
3. RELINQUISHED BY	DATE	TIME	3. RECEIVED BY	DATE	TIME

COMMENTS

DISTRIBUTION: WHITE (ACCOMPANIES SAMPLE) YELLOW (FIELD COPY) PINK (FILE COPY)

4/02R
FORM NO. TtNUS-001

TETRA TECH NUS, INC. CHAIN OF CUSTODY | NUMBER 4808 | PAGE 1 OF 1

PROJECT NO:	FACILITY:	PROJECT MANAGER	PHONE NUMBER	LABORATORY NAME AND CONTACT:
CTO N9060 0279	NSWC CRANE	RALPH BASINSKI	(412) 921-8308	LAUCKS / ANN HO
SAMPLERS (SIGNATURE)		FIELD OPERATIONS LEADER: TERRY ROJAHN	PHONE NUMBER: (412) 921-8308	ADDRESS: 940 SOUTH HARNEY ST.
		CARRIER/WAYBILL NUMBER: FED EX AB# 8412 2491 1040		CITY, STATE: SEATTLE WA 98108

STANDARD TAT ☒
RUSH TAT ☐
☐ 24 hr. ☐ 48 hr. ☐ 72 hr. ☐ 7 day ☐ 14 day

CONTAINER TYPE PLASTIC (P) or GLASS (G): G G G G P P P P G

PRESERVATIVE USED: 4°C/HCl, 4°C/HCl, 4°C, 4°C/HNO3, 4°C/HNO3, 4°C/H2SO4, 4°C/H3PO4

DATE YEAR 2003	TIME	SAMPLE ID	LOCATION ID	TOP DEPTH (FT)	BOTTOM DEPTH (FT)	MATRIX (GW, SO, SW, SD, QC, ETC.)	COLLECTION METHOD GRAB (G) COMP (C)	No. OF CONTAINERS	Volatiles SW846 8260B	Volatiles SW846 8015B	Explosives SW-846 8330	Misc. Explosives SW846 8330	Total Metals & Hg SW846 6020 & 7470A	Dis Metals & Hg SW846 6020 & 7470A	Nitrate & Nitrite EPA 353.2	Sulfate & Chloride	TOC	COMMENTS
10/25	0800	TB10250301	QC	-	-	QC	G	4	2	2								TRIP BLANK
10/25	0810	16SW1501	16SW15	-	-	SW	G	12	3	3	2	2	1	-	1			
10/25	0810	16SW1501-F	↓	-	-	SW	G	1	-	-	-	-	-	1	-			
10/25	0935	16SW1201	16 SW12	-	-	SW	G	12	3	3	2	2	1	-	1			
10/25	0935	16SW1201-F	↓	-	-	SW	G	1	-	-	-	-	-	1	-			
10/25	1045	16SW1301	16 SW13	-	-	SW	G	12	3	3	2	2	1	-	1			
10/25	1045	16SW1301-F	↓	-	-	SW	G	1	-	-	-	-	-	1	-			
10/25	1100	16SW2001	16 SW20	-	-	SW	G	12	3	3	2	2	1	-	1			
10/25	1100	16SW2001-F	↓	-	-	SW	G	1	-	-	-	-	-	1	-			
10/26	1608	16GW0203	16 GW02	-	-	GW	G	15	3	3	2	2	1	-	1	1	2	
10/26	1630	16GW0502	16 GW05	-	-	GW	G	13	3	3	2	2	1	-	1	1	-	
10/26	0955	16GW0402	16 GW04	-	-	GW	G	39	9	9	6	6	3	-	3	3	-	DO MS/MSD
10/26	1255	16GW0102	16 GW01	-	-	GW	G	13	3	3	2	2	1	-	1	1	-	

1. RELINQUISHED BY	DATE 10/27/03	TIME 1900	1. RECEIVED BY FEDERAL EXPRESS	DATE 10/27/03	TIME 1900
2. RELINQUISHED BY	DATE	TIME	2. RECEIVED BY	DATE	TIME
3. RELINQUISHED BY	DATE	TIME	3. RECEIVED BY	DATE	TIME

COMMENTS

DISTRIBUTION: WHITE (ACCOMPANIES SAMPLE) YELLOW (FIELD COPY) PINK (FILE COPY)

4/02R
FORM NO. TtNUS-001

TETRA TECH NUS, INC. CHAIN OF CUSTODY NUMBER 4811 PAGE 1 OF

PROJECT NO:	FACILITY:	PROJECT MANAGER	PHONE NUMBER	LABORATORY NAME AND CONTACT:
CTO N9060 0279	NSWC CRANE	RALPH BASINSKI	(412) 921-8308	LAUCKS / ANH HO
SAMPLERS (SIGNATURE)		FIELD OPERATIONS LEADER: TERRY ROJAHN	PHONE NUMBER: (412) 921-8857	ADDRESS: 940 SOUTH HARNEY ST.
		CARRIER/WAYBILL NUMBER: FED EX AB# 841224911040		CITY, STATE: SEATTLE, WA 98108

STANDARD TAT ☒
RUSH TAT ☐
☐ 24 hr. ☐ 48 hr. ☐ 72 hr. ☐ 7 day ☐ 14 day

DATE YEAR 2003	TIME	SAMPLE ID	LOCATION ID	TOP DEPTH (FT)	BOTTOM DEPTH (~~FT~~) INCHES	MATRIX (GW, SO, SW, SD, QC, ETC.)	COLLECTION METHOD GRAP (G) COMP (C)	No. OF CONTAINERS	Volatiles (4oz jars) SW846 8260B	Volatiles (4oz jar) SW846 8015B	Explosive & Misc. Exp. SW846 8330	Metals & Hg SW846 6020 & 7471A					COMMENTS
CONTAINER TYPE PLASTIC (P) or GLASS (G)									G	G	G	G					
PRESERVATIVE USED									4°C	4°C	4°C	4°C					
10/25	0945	16SD12 0004	16 SD12	0	4	SD	G	4	1	1	1	1					
10/25	1050	16SD13 0004	16 SD13	0	4	SD	G	4	1	1	1	1					
10/25	1110	16SD20 0004	16 SD20	0	4	SD	G	4	1	1	1	1					
10/25	0000	16FD10250301	QC	-	-	QC	G	4	1	1	1	1					Dup of 16SD130004

1. RELINQUISHED BY	DATE 10/27/03	TIME 1900	1. RECEIVED BY FEDERAL EXPRESS	DATE 10/27/03	TIME 1900
2. RELINQUISHED BY	DATE	TIME	2. RECEIVED BY 16FD1025 0000	DATE	TIME
3. RELINQUISHED BY	DATE	TIME	3. RECEIVED BY	DATE	TIME

COMMENTS

DISTRIBUTION: WHITE (ACCOMPANIES SAMPLE) YELLOW (FIELD COPY) PINK (FILE COPY)

4/02R
FORM NO. TtNUS-001

TETRA TECH NUS, INC.

CHAIN OF CUSTODY

NUMBER 4812

PAGE 1 OF 1

PROJECT NO: CTO N9060 0273	FACILITY: NSWC CRANE	PROJECT MANAGER: RALPH BASINSKI	PHONE NUMBER: (412) 921-8308	LABORATORY NAME AND CONTACT: MICROSEEPS / DEBBIE HALLO
SAMPLERS (SIGNATURE): [signature]		FIELD OPERATIONS LEADER: TERRY ROJAHN	PHONE NUMBER: (412) 921-8857	ADDRESS: 220 WILLIAM PITT WAY
		CARRIER/WAYBILL NUMBER: FED EX AB# 8412 2491 0846		CITY, STATE: PITTSBURGH PA 15238

STANDARD TAT ☒
RUSH TAT ☐
☐ 24 hr. ☐ 48 hr. ☐ 72 hr. ☐ 7 day ☐ 14 day

CONTAINER TYPE PLASTIC (P) or GLASS (G): G

PRESERVATIVE USED: 4°C

TYPE OF ANALYSIS: METHANE, ETHANE & ETHENE

DATE YEAR 2003	TIME	SAMPLE ID	LOCATION ID	TOP DEPTH (FT)	BOTTOM DEPTH (FT)	MATRIX (GW, SO, SW, SD, QC, ETC.)	COLLECTION METHOD GRAP (G) COMP (C)	No. OF CONTAINERS	METHANE, ETHANE & ETHENE								COMMENTS
10/25	1608	16GW0203	16 GW02	–	–	GW	G	2	2								
10/25	1630	16GW0502	16 GW05	–	–	GW	G	2	2								

1. RELINQUISHED BY [signature]	DATE 10/27/03	TIME 1900	1. RECEIVED BY FEDERAL EXPRESS	DATE 10/27/03	TIME 1900
2. RELINQUISHED BY	DATE	TIME	2. RECEIVED BY	DATE	TIME
3. RELINQUISHED BY	DATE	TIME	3. RECEIVED BY	DATE	TIME

COMMENTS

DISTRIBUTION: WHITE (ACCOMPANIES SAMPLE) YELLOW (FIELD COPY) PINK (FILE COPY)

4/02R
FORM NO. TtNUS-001

TETRA TECH NUS, INC. CHAIN OF CUSTODY NUMBER 4813 PAGE 1 OF

PROJECT NO:	FACILITY:	PROJECT MANAGER	PHONE NUMBER	LABORATORY NAME AND CONTACT:
CTO N9060 0279	NSWC CRANE	RALPH BASINSKI	(412) 921-8308	LAUCKS / ANH HO
SAMPLERS (SIGNATURE)		FIELD OPERATIONS LEADER: TERRY ROJAHN	PHONE NUMBER (412) 921-8857	ADDRESS 940 SOUTH HARNEY ST.
		CARRIER/WAYBILL NUMBER FED. EX AB# 8412 2491 1040		CITY, STATE SEATTLE, WA 98108

STANDARD TAT ☒
RUSH TAT ☐
☐ 24 hr. ☐ 48 hr. ☐ 72 hr. ☐ 7 day ☐ 14 day

CONTAINER TYPE PLASTIC (P) or GLASS (G): P
PRESERVATIVE USED: 4°C / HNO3

TYPE OF ANALYSIS: DIS. METALS & Hg SW846 6020 & 7470A

DATE YEAR 2003	TIME	SAMPLE ID	LOCATION ID	TOP DEPTH (FT)	BOTTOM DEPTH (FT)	MATRIX (GW, SO, SW, SD, QC, ETC.)	COLLECTION METHOD GRAP (G) COMP (C)	No. OF CONTAINERS									COMMENTS
10/27	0900	13SW1501-F	13 SW15	-	-	SW	G	1	1								
10/27	0940	13SW2801-F	13 SW28	-	-	SW	G	1	1								
10/27	1015	13SW0902-F	13 SW09	-	-	SW	G	1	1								
10/27	1110	13SW2501-F (Tc)	13 SW25	-	-	SW	G	1	1								
10/27	1305	13SW0702-F	13 SW07	-	-	SW	G	1	1								
10/27	1330	13SW2401-F	13 SW24	-	-	SW	G	1	1								
10/27	1410	13SW2601-F	13 SW26	-	-	SW	G	1	1								
10/27	0000	13FD0270301-F	QC	-	-	SW	G	1	1								DUP OF 13SW2502

	DATE	TIME		DATE	TIME
1. RELINQUISHED BY	10/27/03	1900	1. RECEIVED BY FEDERAL EXPRESS	10/27/03	1900
2. RELINQUISHED BY			2. RECEIVED BY		
3. RELINQUISHED BY			3. RECEIVED BY		

COMMENTS

DISTRIBUTION: WHITE (ACCOMPANIES SAMPLE) YELLOW (FIELD COPY) PINK (FILE COPY)

4/02R
FORM NO. TINUS-001

TETRA TECH NUS, INC. | CHAIN OF CUSTODY | NUMBER 4814 | PAGE 1 OF 1

PROJECT NO:	FACILITY:	PROJECT MANAGER	PHONE NUMBER	LABORATORY NAME AND CONTACT:
CTO N9060 0279	NSWC CRANE	RALPH BASINSKI	(412) 921-8308	LAUCKS / ANN HO
SAMPLERS (SIGNATURE)		FIELD OPERATIONS LEADER	PHONE NUMBER	ADDRESS
		TERRY ROJAHN	(412) 921-8857	940 SOUTH HARNEY ST.
		CARRIER/WAYBILL NUMBER		CITY, STATE
		FED. EX. AB # 8412 2491 1040		SEATTLE, WA 98108

STANDARD TAT [X]
RUSH TAT [ ]
[ ] 24 hr. [ ] 48 hr. [ ] 72 hr. [ ] 7 day [ ] 14 day

DATE YEAR 2003	TIME	SAMPLE ID	LOCATION ID	TOP DEPTH (FT)	BOTTOM DEPTH (FT)	MATRIX (GW, SO, SW, SD, QC, ETC.)	COLLECTION METHOD GRAP (G) COMP (C)	No. OF CONTAINERS	Volatiles SW846 8260B	Volatiles SW846 8015B	Explosives SW846 8330	Misc. Explosives SW846 8330	Total Metals & Hg SW846 6020 & 7470A	Nitrate + Nitrite EPA 353.2	Sulfate & Chloride	Nitrate + Nitrite (353.2) & Ammonia (350.1)	Selected Ion Monitoring	COMMENTS
									TYPE OF ANALYSIS									
									CONTAINER TYPE PLASTIC (P) or GLASS (G)									
									PRESERVATIVE USED	4°C/HCl	4°C/HCl	4°C	4°C	4°C/HNO3	4°C/H2SO4	4°C	4°C/H2SO4	
10/26	1550	16GWT0202	16 GWT02	-	-	GW	G	13	3	3	2	2	1	1	1			
10/26	0000	16FD10260301	QC	-	-	GW	G	13	3	3	2	2	1	1	1			DUP OF 16GW0402
10/27	0900	13SW1501	13/SW15	-	-	SW	G	6	-	-	2	2	1	-	-	1		
10/27	0940	13SW2801	13 SW28	-	-	SW	G	6	-	-	2	2	1	-	-	1		
10/27	1015	13SW0902	13 SW09	-	-	SW	G	6	-	-	2	2	1	-	-	1		
10/27	1110	13SW2501	13 SW25	-	-	SW	G	8 (TA)	-	-	2	2	1	-	-	1	2	
10/27	1305	13SW0702	13 SW07	-	-	SW	G	6	-	-	2	2	1	-	-	1		
10/27	1330	13SW2401	13 SW24	-	-	SW	G	6	-	-	2	2	1	-	-	1		
10/27	1410	13SW2601	13 SW26	-	-	SW	G	6	-	-	2	2	1	-	-	1		
10/27	0000	13FD10270301	QC	-	-	SW	G	8 (TA)	-	-	2	2	1	-	-	1	2	DUP OF 13SW2602 (TA)

	DATE	TIME		DATE	TIME
1. RELINQUISHED BY [signature]	10/27/03	1900	1. RECEIVED BY FEDERAL EXPRESS	10/27/03	1900
2. RELINQUISHED BY	DATE	TIME	2. RECEIVED BY	DATE	TIME
3. RELINQUISHED BY	DATE	TIME	3. RECEIVED BY	DATE	TIME

COMMENTS

DISTRIBUTION: WHITE (ACCOMPANIES SAMPLE) YELLOW (FIELD COPY) PINK (FILE COPY)

4/02R
FORM NO. TtNUS-001

TETRA TECH NUS, INC. CHAIN OF CUSTODY NUMBER 4815 PAGE 1 OF

PROJECT NO:	FACILITY:	PROJECT MANAGER	PHONE NUMBER	LABORATORY NAME AND CONTACT:
CTO N9060 0279	NSWC CRANE	RALPH BASINSKI	(412) 921-8308	LAUCKS / ANN HO
SAMPLERS (SIGNATURE)		FIELD OPERATIONS LEADER	PHONE NUMBER	ADDRESS
		TERRY ROJAHN	(412) 921-8868	940 SOUTH HARNEY ST
		CARRIER/WAYBILL NUMBER		CITY, STATE
		FED. EX. AB # 8412 2491 1030		SEATTLE WA 98108

STANDARD TAT ☒
RUSH TAT ☐
☐ 24 hr. ☐ 48 hr. ☐ 72 hr. ☐ 7 day ☐ 14 day

DATE YEAR 2003	TIME	SAMPLE ID	LOCATION ID	TOP DEPTH (FT)	BOTTOM DEPTH (FT)	MATRIX (GW, SO, SW, SD, QC, ETC.)	COLLECTION METHOD GRAP (G) COMP (C)	No. OF CONTAINERS	Explosives SW846 8330	Misc. Explosives SW846 8330	Total Metals SW846 6020 & Hg 7470A	Nitrate + Nitrite (353.2)	Ammonia (350.1)	Sulfate & Chloride	Total Organic Carbon SW846 9060	Volatiles SW846 8260B	Volatiles SW846 8015B	COMMENTS
CONTAINER TYPE PLASTIC (P) or GLASS (G)									G	G	P	P	P	G				
PRESERVATIVE USED									4°C	4°C	4°C	4°C/HNO3	4°C/H2SO4	4°C	4°C	4°C/H3PO4		
10/28	1045	13GWT2402	13 GW24	–	–	GW	G	6	2	2	1	1						
10/28	1255	13GWT2302	13 GW23	–	–	GW	G	6	2	2	1	1						
10/28	1545	TB10280301	QC	–	–	QC	G	4	–	–	–	–	–	–	2	2		
10/28	1550	SB10280301	QC	–	–	QC	G	15	2	2	1	1	1	2	3	3	TAP H_2O	
10/28	1615	SB10280302	QC	–	–	QC	G	15	2	2	1	1	1	2	3	3	DI H_2O	
10/28	1555	13GWT1902	13 GW19	–	–	GW	G	6	2	2	1	1						

	DATE	TIME		DATE	TIME
1. RELINQUISHED BY	10/28/03	1900	1. RECEIVED BY FEDERAL EXPRESS	10/28/03	1900
2. RELINQUISHED BY			2. RECEIVED BY		
3. RELINQUISHED BY			3. RECEIVED BY		

COMMENTS

DISTRIBUTION: WHITE (ACCOMPANIES SAMPLE) YELLOW (FIELD COPY) PINK (FILE COPY)

4/02R
FORM NO. TINUS-001

TETRA TECH NUS, INC. | CHAIN OF CUSTODY | NUMBER 4816 | PAGE 1 OF 1

PROJECT NO:	FACILITY:	PROJECT MANAGER	PHONE NUMBER	LABORATORY NAME AND CONTACT:
CTO N9060 0279	NSWC CRANE	RALPH BASINSKI	(412) 921-8308	LAUCKS / ANH HO
SAMPLERS (SIGNATURE)		FIELD OPERATIONS LEADER	PHONE NUMBER	ADDRESS
		TERRY ROJAHN	(412) 921-8857	940 SOUTH HARNEY ST
		CARRIER/WAYBILL NUMBER		CITY, STATE
		FED EX AB # 8412 2491 0629		SEATTLE WA 98108

STANDARD TAT ☒ EXCEPT FOR QUICK TURN WELLS
RUSH TAT ☐
☐ 24 hr. ☐ 48 hr. ☒ 72 hr. ☐ 7 day ☐ 14 day
← SEE COMMENTS FOR QT

DATE YEAR 2003	TIME	SAMPLE ID	LOCATION ID	TOP DEPTH (FT)	BOTTOM DEPTH (FT)	MATRIX (GW, SO, SW, SD, QC, ETC.)	COLLECTION METHOD GRAB (G) COMP (C)	No. OF CONTAINERS	EXPLOSIVES SW846 8330	MISC. EXPLOSIVES SW846 8330	Total Metals SW846 6020 & Hg 7470A	Nitrate + Nitrite (353.2)	AMMONIA (350.1)	Dis. Metals SW846 6020 & Hg 7470A				COMMENTS
CONTAINER TYPE PLASTIC (P) or GLASS (G)									G	G	P	P	P					
PRESERVATIVE USED									4°C	4°C	4°C / HNO3	4°C / H2SO4	4°C / HNO3					
11/05	0950	13GWT2102	13 MWT21	-	-	GW	G	18	6	6	3	3						DO MS/MSD
11/05	1047	13GWT1702	13 MWT17	-	-	GW	G	6	2	2	1	1						
11/05	1630	13GWT4001	13 MWT40	-	-	GW	G	6	2	2	1	1						(QT)
11/05	0000	13FD11050301	QC	-	-	GW	G	6	2	2	1	1						FROM 13GWT1702
11/06	0845	13GWT2502	13MW T25	-	-	GW	G	1	1	-	-	-						MIN. VOLUME
11/06	1320	13GWT0502	13MW T05	-	-	GW	G	6	2	2	1	1						
11/06	1320	13GWT0502-F	13MW T05	-	-	GW	G	1	-	-	-	-	1					
11/06	1500	13GWT4201	13MW T42	-	-	GW	G	3	1	1	-	1						(QT) MIN. VOLUME

	DATE	TIME		DATE	TIME
1. RELINQUISHED BY Terry Rojahn	11/6/03	1900	1. RECEIVED BY Terry Rojahn	11/6/03	1900
2. RELINQUISHED BY	DATE	TIME	2. RECEIVED BY	DATE	TIME
3. RELINQUISHED BY	DATE	TIME	3. RECEIVED BY	DATE	TIME

COMMENTS MIN. VOLUME = WELLS that DRY UP AND will take more than 1 day to sample all PARAMETERS.

DISTRIBUTION: WHITE (ACCOMPANIES SAMPLE) YELLOW (FIELD COPY) PINK (FILE COPY)

4/02R
FORM NO. TtNUS-001

TETRA TECH NUS, INC. CHAIN OF CUSTODY NUMBER 4817 PAGE 1 OF

PROJECT NO:	FACILITY:	PROJECT MANAGER	PHONE NUMBER	LABORATORY NAME AND CONTACT:
CTO N90060 0279	NSWC CRANE	RALPH BASINSKI	(412) 921-8308	LAUCKS / ANH H/O
SAMPLERS (SIGNATURE)		FIELD OPERATIONS LEADER	PHONE NUMBER	ADDRESS
		TERRY ROJAHN	(412) 921-8857	940 SOUTH HARNEY ST.
		CARRIER/WAYBILL NUMBER		CITY, STATE
		FED EX AB# 8412 2491 0618		SEATTLE WA 98108

STANDARD TAT ☐
RUSH TAT ☐
☐ 24 hr. ☐ 48 hr. ☒ 72 hr. ☐ 7 day ☐ 14 day

(QT)

DATE YEAR 2003	TIME	SAMPLE ID	LOCATION ID	TOP DEPTH (FT)	BOTTOM DEPTH (FT)	MATRIX (GW, SO, SW, SD, QC, ETC.)	COLLECTION METHOD GRAP (G) COMP (C)	No. OF CONTAINERS	EXPLOSIVES SW 846 8330	MISC EXPLOSIVES SW 846 8330	Total Metals & Hg SW846 6020 & 7470A	Nitrate + Nitrite (353.2)	Ammonia (350.1)	Dis Metals & Hg SW846 6020 & 7470A			COMMENTS
CONTAINER TYPE PLASTIC (P) or GLASS (G)									G	G	P	P	P				
PRESERVATIVE USED									4°C	4°C	4°C/HNO3	4°C/H2SO4	4°C/HNO3				
11/06	1500	13GWT4201	13GW T42	—	—	GW	G	1	—	—	1						(QT)
11/06	1500	13GWT4201-F	13GW T42	—	—	GW	G	1	—	—	—	—	1				(QT)
11/06	1550	13GWT3701	13GW T37	—	—	GW	G	6	2	2	1	1					(QT)
11/07	1205	13GWT2901	13GW T29	—	—	GW	G	6	2	2	1	1					(QT)
11/07	1400	13GWT3901	13GW T39	—	—	GW	G	6	2	2	1	1					(QT)
11/07	1400	13GWT3901-F	13GW T39	—	—	GW	G	1	—	—	—	—	1				(QT)

1. RELINQUISHED BY	DATE	TIME	1. RECEIVED BY	DATE	TIME
	11/7/03	1900	FEDERAL EXPRESS	11/7/03	1900
2. RELINQUISHED BY	DATE	TIME	2. RECEIVED BY	DATE	TIME
3. RELINQUISHED BY	DATE	TIME	3. RECEIVED BY	DATE	TIME

COMMENTS QT = QUICK TURN

DISTRIBUTION: WHITE (ACCOMPANIES SAMPLE) YELLOW (FIELD COPY) PINK (FILE COPY)

4/02R
FORM NO. TINUS-001

TETRA TECH NUS, INC. CHAIN OF CUSTODY NUMBER 4818 PAGE 1 OF 1

PROJECT NO:	FACILITY:	PROJECT MANAGER	PHONE NUMBER	LABORATORY NAME AND CONTACT:
N9060 CTO 0279	NSWC CRANE	RALPH BASINSKI	(412) 921-8308	LAUCKS / ANN HO
SAMPLERS (SIGNATURE)		FIELD OPERATIONS LEADER	PHONE NUMBER	ADDRESS
		TERRY ROJAHN	(412) 921-8857	940 SOUTH HARNEY ST.
		CARRIER/WAYBILL NUMBER		CITY, STATE
		FED. EX AB# 8412 2491 0375		SEATTLE WA 98108

STANDARD TAT ☒ RUSH TAT ☐ ☐ 24 hr. ☐ 48 hr. ☒ 72 hr. ☐ 7 day ☐ 14 day ← EXPLOSIVES ONLY SEE COMMENTS

DATE YEAR 2003	TIME	SAMPLE ID	LOCATION ID	TOP DEPTH (FT)	BOTTOM DEPTH (FT)	MATRIX (GW, SO, SW, SD, QC, ETC.)	COLLECTION METHOD GRAP (G) COMP (C)	No. OF CONTAINERS	VOLATILES SW846 8260B	VOLATILES SW846 8015B	EXPLOSIVES & MISC. EXPL. SW846 8330	Total METALS & Hg SW846 6020 & 7470A	Nitrate + Nitrite EPA 353.2	SULFATE & CHLORIDE	Total Organic Carbon	Dis METALS & Hg SW846 6020 & 7470A	COMMENTS
CONTAINER TYPE PLASTIC (P) or GLASS (G)									G	G	G	P	P	P	G	P	
PRESERVATIVE USED									4°C/HCl	4°C/HCl	4°C	4°C/HNO3	4°C/H2SO4	4°C	4°C/H3PO4	4°C/HNO3	
11/8	0700	TB11080301	QC	-	-	QC	G	4	2	2							TRIP BLANK
11/7	0845	13GWT2502	13GW T25	-	-	GW	G	1	-	-	1					(TR)	FOR MISC. EXPLOSIVES MIN. VOL. SAMPLE
11/8	1215	16GW0302	13GW 03	-	-	GW	G	13	3	3	4	1	1	1	~~1~~		
11/8	1308	16GWT0603	13GW T06	-	-	GW	G	13	3	3	4	1	1	1	-		
11/8	1640	16GWT0402	13GW T04	-	-	GW	G	15	3	3	4	1	1	1	2		
11/9	1035	16GWT0102	13GW T01	-	-	GW	G	6	3	3	-	-	-	-	-		VERY LOW YIELD; MIN. VOL WELL
11/9	1635	16GWT0302	13GW T03	-	-	GW	G	11	3	3	2	1	1	1	-	~~1~~ (TR)	MIN VOL
11/9	1635	16GWT0302-F	13GW T03	-	-	GW	G	1	-	-	-	-	-	-	-	1	MIN VOL
11/10	0915	13GWT3801	13GW T38	-	-	GW	G	6 ~~1~~ (TR)	- ~~1~~ (TR)	- ~~3~~ (TR)	4	1	*1	- ~~1~~ (TR)	-		* ALSO ANALYZE FOR AMMONIA
11/10	0915	13GWT3801-F	13GW T38	-	-	GW	G	1	-	-	-	-	-	-	-	1	
11/10	1330	13GWT0702	13GW T07	-	-	GW	G	6	-	-	4	1	*1				* ALSO ANALYZE FOR AMMONIA
11/10	0000	13FD11080301	QC	-	-	GW	G	6	-	-	4	1	*1	(FROM 13GWT0702)			* ALSO ANALYZE FOR AMMONIA

1. RELINQUISHED BY	DATE	TIME	1. RECEIVED BY	DATE	TIME
	11-10-03	1900	FEDERAL EXPRESS	11-10-03	1900
2. RELINQUISHED BY	DATE	TIME	2. RECEIVED BY	DATE	TIME
3. RELINQUISHED BY	DATE	TIME	3. RECEIVED BY	DATE	TIME

COMMENTS ** QUICK TURN FOR EXPLOSIVES ONLY @ 13GWT3801

DISTRIBUTION: WHITE (ACCOMPANIES SAMPLE) YELLOW (FIELD COPY) PINK (FILE COPY)

4/02R FORM NO. TtNUS-001

TETRA TECH NUS, INC. CHAIN OF CUSTODY NUMBER 4819 PAGE 1 OF

PROJECT NO:	FACILITY:	PROJECT MANAGER	PHONE NUMBER	LABORATORY NAME AND CONTACT:
CTO N9060 0279	NSWC	RALPH BASINSKI	(412) 921-8308	MICROSEEPS / DEBBIE HALLO
SAMPLERS (SIGNATURE)		FIELD OPERATIONS LEADER	PHONE NUMBER	ADDRESS
Terry Rojahn		TERRY ROJAHN	(412) 921-8857	220 WILLIAM PITT WAY
		CARRIER/WAYBILL NUMBER		CITY, STATE
		FED. EX. AB # 8412 2491 0386		PITTSBURGH, PA 15238

STANDARD TAT ☒
RUSH TAT ☐
☐ 24 hr. ☐ 48 hr. ☐ 72 hr. ☐ 7 day ☐ 14 day

CONTAINER TYPE PLASTIC (P) or GLASS (G): G
PRESERVATIVE USED: 4°C

DATE YEAR 2003	TIME	SAMPLE ID	LOCATION ID	TOP DEPTH (FT)	BOTTOM DEPTH (FT)	MATRIX (GW, SO, SW, SD, QC, ETC.)	COLLECTION METHOD GRAP (G) COMP (C)	No. OF CONTAINERS	TYPE OF ANALYSIS: Methane, Ethane & Ethene								COMMENTS
11/8	1215	16GW0302	16 GW03	-	-	GW	G	2	2								
11/8	1308	16GWT0603	16 GWT06	-	-	GW	G	2	2								
11/8	1640	16GWT0402	16 GWT04	-	-	GW	G	2	2								

	DATE	TIME		DATE	TIME
1. RELINQUISHED BY Terry Rojahn	11-10-03	1900	1. RECEIVED BY FEDERAL EXPRESS	11-10-03	1900
2. RELINQUISHED BY	DATE	TIME	2. RECEIVED BY	DATE	TIME
3. RELINQUISHED BY	DATE	TIME	3. RECEIVED BY	DATE	TIME

COMMENTS

DISTRIBUTION: WHITE (ACCOMPANIES SAMPLE) YELLOW (FIELD COPY) PINK (FILE COPY)

4/02R
FORM NO. TtNUS-001

TETRA TECH NUS, INC. | CHAIN OF CUSTODY | NUMBER 4820 | PAGE 1 OF 1

PROJECT NO:	FACILITY:	PROJECT MANAGER	PHONE NUMBER	LABORATORY NAME AND CONTACT:
9060 CTO 0279	NSWC CRANE	RALPH BASINSKI	(412) 921-8308	LAUCKS / ANH HO
SAMPLERS (SIGNATURE)		FIELD OPERATIONS LEADER	PHONE NUMBER	ADDRESS
		TERRY ROWAHN	(412) 921-8857	940 SOUTH HARNEY ST.
		CARRIER/WAYBILL NUMBER		CITY, STATE
		FED. EX. AB # 8412 2491 0397		SEATTLE WA, 98108

STANDARD TAT ☒
RUSH TAT ☐
☐ 24 hr. ☐ 48 hr. ☐ 72 hr. ☐ 7 day ☐ 14 day

DATE YEAR 2003	TIME	SAMPLE ID	LOCATION ID	TOP DEPTH (FT)	BOTTOM DEPTH (FT)	MATRIX (GW, SO, SW, SD, QC, ETC.)	COLLECTION METHOD GRAP (G) COMP (C)	No. OF CONTAINERS	Total Metals & Hg 6020 / 7470A	Explosives SW 846 8330	Misc. Explosives SW 846 8330	Nitrate + Nitrite	Ammonia	Total Organic Carbon	Dis Metals & Hg 6020 / 7470A	Volatiles 8260B	Volatiles 8015B	COMMENTS
CONTAINER TYPE PLASTIC (P) or GLASS (G)									P	G	G	P	G	P				
PRESERVATIVE USED									4°C / HNO3	4°C	4°C	4°C / H2SO4	4°C / H3PO4	4°C / HNO3	4°C	4°C	4°C	SEE COMMENTS
11/9	0910	13GWT2502	13GW T25	–	–	GW	G	1	1									
11/11	0925	13GWT0302	13GW T03	–	–	GW	G	8	1	2	2	1	2					
11/11	0925	13GWT0302-F	13GW T03	–	–	GW	G	1	–	–	–	–	–	1				
11/11	1315	TB11110301	QC	–	–	QC	G	4	–	–	–	–	–	–	2	2		TRIP BLANK G/HCl PROVIDED(1)
11/11	1400	16SD220004	16SD 22	–	–	SD	G	6	–	–	–	–	–	–	3	3		4oz JAR FOR MOISTURE CONTENT W/ ENCORE SAMPLES

1. RELINQUISHED BY Terry Rowahn	DATE 11/11/03	TIME 1900	1. RECEIVED BY FEDERAL EXPRESS	DATE 11/11/03	TIME 1900
2. RELINQUISHED BY	DATE	TIME	2. RECEIVED BY	DATE	TIME
3. RELINQUISHED BY	DATE	TIME	3. RECEIVED BY	DATE	TIME

COMMENTS

DISTRIBUTION: WHITE (ACCOMPANIES SAMPLE) YELLOW (FIELD COPY) PINK (FILE COPY)

4/02R
FORM NO. TtNUS-001

TETRA TECH NUS, INC.

CHAIN OF CUSTODY

NUMBER 4821

PAGE 1 OF

PROJECT NO:	FACILITY:	PROJECT MANAGER	PHONE NUMBER	LABORATORY NAME AND CONTACT:
CTO N9060 0279	NSWC CRANE	RALPH BASINSKI	(412)921-8308	LAUCKS / ANN HO
SAMPLERS (SIGNATURE)		FIELD OPERATIONS LEADER	PHONE NUMBER	ADDRESS
Terry Hogal		TERRY ROJAHN	(412) 921-8857	940 SOUTH HARNEY ST.
		CARRIER/WAYBILL NUMBER		CITY, STATE
		FED. EX. AB # 8412 2491 0401		SEATTLE WA 98108

STANDARD TAT ☒
RUSH TAT ☐
☐ 24 hr. ☐ 48 hr. ☐ 72 hr. ☐ 7 day ☐ 14 day

DATE YEAR 2003	TIME	SAMPLE ID	LOCATION ID	TOP DEPTH (FT)	BOTTOM DEPTH (FT)	MATRIX (GW, SO, SW, SD, QC, ETC.)	COLLECTION METHOD GRAB (G) COMP (C)	No. OF CONTAINERS	EXPLOSIVES SW 846 8330	MISC. EXPLOSIVES SW 846 8330	Total METALS & Hg 6020 & 7470A	NITRATE & NITRITE Ammonia	DIS METALS & Hg 6020 & 7470A				COMMENTS
								CONTAINER TYPE PLASTIC (P) or GLASS (G)	G	G	P	P	P				
								PRESERVATIVE USED	4°C	4°C	4°C/HNO3	4°C/H2SO4	4°C/HNO3				
11/18	1400	13SW1102	13SW 11	-	-	SW	G	6	2	2	1	1					
11/18	1400	13SW1102-F	13SW 11	-	-	SW	G	1	-	-	-	-	1				
11/18	1408	13GWT1202	13GW T12	-	-	GW	G	6	2	2	1	1					
11/19	1140	13GWT2602	13GW T26	-	-	GW	G	6	2	2	1	1					
11/19	1235	13GWT2003	13GW T20	-	-	GW	G	6	2	2	1	1					
11/19	1543	13GWT3201	13GW T20	-	-	GW	G	6	2	2	1	1					

	DATE	TIME		DATE	TIME
1. RELINQUISHED BY Terry Hogal	11-19-03	1900	1. RECEIVED BY FEDERAL EXPRESS	11/19/03	1900
2. RELINQUISHED BY	DATE	TIME	2. RECEIVED BY	DATE	TIME
3. RELINQUISHED BY	DATE	TIME	3. RECEIVED BY	DATE	TIME

COMMENTS

DISTRIBUTION: WHITE (ACCOMPANIES SAMPLE) YELLOW (FIELD COPY) PINK (FILE COPY)

4/02R
FORM NO. TINUS-001

TETRA TECH NUS, INC.

CHAIN OF CUSTODY

NUMBER 4822

PAGE 1 OF 1

PROJECT NO:	FACILITY:	PROJECT MANAGER	PHONE NUMBER	LABORATORY NAME AND CONTACT:
CTO N9060 0279	NSWC CRANE	RALPH BASINSKI	(412) 921-8308	LAUCKS / ANH HO
SAMPLERS (SIGNATURE)		FIELD OPERATIONS LEADER: TERRY ROJAHN	PHONE NUMBER: (412) 921-8857	ADDRESS: 940 SOUTH HARNEY ST.
		CARRIER/WAYBILL NUMBER: FED EX AB # 8412 2491 0607		CITY, STATE: SEATTLE WA 98108

STANDARD TAT ☒
RUSH TAT ☐
☐ 24 hr. ☐ 48 hr. ☐ 72 hr. ☐ 7 day ☐ 14 day

DATE YEAR 2003	TIME	SAMPLE ID	LOCATION ID	TOP DEPTH (FT)	BOTTOM DEPTH (FT)	MATRIX (GW, SO, SW, SD, QC, ETC.)	COLLECTION METHOD GRAB (G) COMP (C)	No. OF CONTAINERS	Explosives & Misc. Expl. SW 846 8330	Total Metals & Hg 6020 & 7470A	Dis Metals & Hg 6020 & 7470A	Nitrate + Nitrite (353.2)	Ammonia (350.1)	Total Organic Carbon	Volatiles SW 846 8260B	Volatiles SW 846 8015B	Sulfate & Chloride	COMMENTS
CONTAINER TYPE PLASTIC (P) or GLASS (G)									G	P	P	P	G	G	G	P		
PRESERVATIVE USED									4°C	4°C/HNO3	4°C/HNO3	4°C/H2SO4	4°C/H3PO4	4°C/HCl	4°C/HCl	4°C		
11/20	1055	13GWT1102	13GW T11	-	-	GW	G	6	4	1	-	1						
11/20	1322	13GWT1002	13GW T10	-	-	GW	G	8	4	1	-	1	2					
11/20	1537	13GWT1602	13GW T16	-	-	GW	G	6	4	1	-	1						
11/19	0815	13GWT2502-F	13GW T25	-	-	GW	G	1	-	-	1	-						
11/20	1610	13GWT2502	13GW T25	-	-	GW	G	1	-	-	-	1						
11/21	0700	TB11210301	QC	-	-	QC	G	4	-	-	-	-	-	2	2			
11/21	1003	16GWT1001	16GW T10	-	-	GW	G	13	4	1	-	*1	-	3	3	1		
11/21	1316	16GWT1201	16GW T12	-	-	GW	G	13	4	1	-	*1	-	3	3	1		
11/21	0000	16FD11210301	QC	-	-	GW	G	13	4	1	-	*1	-	3	3	1	DUP OF 16GWT1201 ~~1004~~	

	DATE	TIME		DATE	TIME
1. RELINQUISHED BY	11-21-03	1900	1. RECEIVED BY: FEDERAL EXPRESS	11-21-03	1900
2. RELINQUISHED BY			2. RECEIVED BY		
3. RELINQUISHED BY			3. RECEIVED BY		

COMMENTS: *Nitrate + Nitrite only @ SWMU 16

DISTRIBUTION: WHITE (ACCOMPANIES SAMPLE) YELLOW (FIELD COPY) PINK (FILE COPY)

4/02R
FORM NO. TtNUS-001

TETRA TECH NUS, INC. CHAIN OF CUSTODY NUMBER 4824 PAGE 1 OF

PROJECT NO:	FACILITY:	PROJECT MANAGER	PHONE NUMBER	LABORATORY NAME AND CONTACT:
CTO N9060 0279	NSWC CRANE	RALPH BASINSKI	(412) 921-8308	LAUCKS / ANN HO
SAMPLERS (SIGNATURE)		FIELD OPERATIONS LEADER	PHONE NUMBER	ADDRESS
TL for Jim Goerdt		TERRY ROJAHN	(412) 921-8857	940 SOUTH HARNEY ST.
		CARRIER/WAYBILL NUMBER		CITY, STATE
		FED. EX AB# 8412 2491 0581		SEATTLE, WA 98108

Terry Rojahn

STANDARD TAT ☒ EXCEPT * QUICK TURN
RUSH TAT ☐
☐ 24 hr. ☐ 48 hr. ☒ 72 hr. ☐ 7 day ☐ 14 day

DATE YEAR 2003	TIME	SAMPLE ID	LOCATION ID	TOP DEPTH (FT)	BOTTOM DEPTH (FT)	MATRIX (GW, SO, SW, SD, QC, ETC.)	COLLECTION METHOD GRAB (G) COMP (C)	No. OF CONTAINERS	VOLATILES SW 846 8260B	VOLATILES SW 846 8015B	EXPLOSIVES SW 846 8330	MISC. EXPLOSIVES SW 846 8330	Total METALS & Hg 6020 & 7470A	Nitrate + Nitrite 353.2	SULFATE & CHLORIDE	Dis. METALS & Hg 6020 & 7470A	COMMENTS
								CONTAINER TYPE PLASTIC (P) or GLASS (G)	G	G	G	G	P	P	P	P	
								PRESERVATIVE USED	4°C/HCl	4°C/HCl	4°C	4°C	4°C/HNO3	4°C/H2SO4	4°C	4°C/HNO3	
11/22	1200	16GWT1301	16GW T13	-	-	GW	G	13	3	3	2	2	1	1	1	-	
11/22	1200	16GWT1301-F	16GW T13	-	-	GW	G	1	-	-	-	-	-	-	-	1	
11/22	1614	16GWT0901	16GW T09	-	-	GW	G	13	3	3	2	2	1	1	1	-	
11/22	1617	16GWT0502	16GW T05	-	-	GW	G	13	3	3	2	2	1	1	1	-	
11/22	1745	16GWT1601	16GW T16	-	-	GW	G	7	*3	*3	-	-	1	-	-	-	* QUICK TURN
11/23	0945	16GWT1601	↓	-	-	GW	G	1	-	-	*1	-	-	-	-	-	* QUICK TURN
11/23	0915	16GWT1601-F	↓	-	-	GW	G	1	-	-	-	-	-	-	-	1	
11/22	0800	TB11220301	QC	-	-	QC	G	4	2	2	-	-	-	-	-	-	TRIP BLANK

1. RELINQUISHED BY	DATE	TIME	1. RECEIVED BY	DATE	TIME
Terry Rojahn	11-24-03	1900	FED. EX.	11-24-03	1900
2. RELINQUISHED BY	DATE	TIME	2. RECEIVED BY	DATE	TIME
3. RELINQUISHED BY	DATE	TIME	3. RECEIVED BY	DATE	TIME

COMMENTS MONITORING WELL 16GWT1601 WAS A LOW YIELD WELL = MIN. VOLUME

DISTRIBUTION: WHITE (ACCOMPANIES SAMPLE) YELLOW (FIELD COPY) PINK (FILE COPY)

4/02R
FORM NO. TtNUS-001

TETRA TECH NUS, INC.

CHAIN OF CUSTODY

NUMBER 4825

PAGE 1 OF 1

PROJECT NO: CTO N9060 0279	FACILITY: NSWC CRANE	PROJECT MANAGER: RALPH BASINSKI	PHONE NUMBER: (412)921-8308
		FIELD OPERATIONS LEADER: TERRY ROJAHN	PHONE NUMBER: (412)921-8857
		CARRIER/WAYBILL NUMBER: FED EX AB# 8412 2491 0581	

LABORATORY NAME AND CONTACT: LAUCKS / ANH HO

ADDRESS: 940 SOUTH HARNEY ST.

CITY, STATE: SEATTLE WA 98108

SAMPLERS (SIGNATURE): TR FOR Jim Gerdt, Scott Brier, Terry Rojahn

STANDARD TAT ☒
RUSH TAT ☐
☐ 24 hr. ☐ 48 hr. ☐ 72 hr. ☐ 7 day ☐ 14 day

DATE YEAR 2003	TIME	SAMPLE ID	LOCATION ID	TOP DEPTH (FT)	BOTTOM DEPTH (FT)	MATRIX (GW, SO, SW, SD, QC, ETC.)	COLLECTION METHOD GRAB (G) COMP (C)	No. OF CONTAINERS	Explosives SW846 8330	Misc. Explosives SW 846 8330	Total Metals & Hg 6020 & 7470A	Nitrate + Nitrite (353.2)	Ammonia (350.1)	Dis Metals & Hg 6020 & 7470A				COMMENTS
								CONTAINER TYPE PLASTIC (P) or GLASS (G)	G	G	P	P	P					
								PRESERVATIVE USED	4°C	4°C	4°C/HNO3	4°C/H2SO4	4°C/HNO3					
11/23	1044	13GWT0402	13GW T04	-	-	GW	G	6	2	2	1	1	-					
11/23	1320	13GWT0102	13GW T01	-	-	GW	G	18	6	6	3	3	-					DO MS/MSD
11/23	1515	13GWT0802	13GW T08	-	-	GW	G	6	2	2	1	1	-					
11/23	1515	13GWT0802-F	13GW T08	-	-	GW	G	1	-	-	-	-	1					
11/23	1530	13GWT4101	13GW T41	-	-	GW	G	2	2	-	-	-	-					
11/23	0000	13FD11230301	QC	-	-	GW	G	6	2	2	1	1	-					DUP OF 13GWT0802
11/23	0000	13FD11230301-F	QC	-	-	GW	G	1	-	-	-	-	1					DUP OF 13GWT0802-F
11/24	1000	13GWT4101	13GW T41	-	-	GW	G	3	-	*1	1	*1	-					*Low Yielding Well MIN. Vol.
11/24	1000	13GWT4101-F	13GW T41	-	-	GW	G	1	-	-	-	-	1					
11/24	1115	13GWT1402	13GW T14	-	-	GW	G	6	2	2	1	1	-					
11/24	1118	13GWT3101	13GW T31	-	-	GW	G	6	2	2	1	1	-					

1. RELINQUISHED BY: Terry Rojahn	DATE: 11-24-03	TIME: 1900	1. RECEIVED BY: FED EX	DATE: 11-24-03	TIME: 1900
2. RELINQUISHED BY	DATE	TIME	2. RECEIVED BY	DATE	TIME
3. RELINQUISHED BY	DATE	TIME	3. RECEIVED BY	DATE	TIME

COMMENTS

DISTRIBUTION: WHITE (ACCOMPANIES SAMPLE) YELLOW (FIELD COPY) PINK (FILE COPY)

4/02R
FORM NO. TtNUS-001

TETRA TECH NUS, INC. CHAIN OF CUSTODY NUMBER 4826 PAGE 1 OF

PROJECT NO:	FACILITY:	PROJECT MANAGER	PHONE NUMBER	LABORATORY NAME AND CONTACT:
CTO N9060 0279	NSWC CRANE	RALPH BASINSKI	(412) 921-8308	MICROSEEPS / DEBBIE HALLO
SAMPLERS (SIGNATURE)		FIELD OPERATIONS LEADER	PHONE NUMBER	ADDRESS
TK FOR Jim Gocadt		TERRY ROJAHN	(412) 921-8857	220 WILLIAM PITT WAY
		CARRIER/WAYBILL NUMBER		CITY, STATE
		FED. EX. AB# 8412 2491 0592		PITTSBURGH, PA 15238

STANDARD TAT ☒
RUSH TAT ☐
☐ 24 hr. ☐ 48 hr. ☐ 72 hr. ☐ 7 day ☐ 14 day

CONTAINER TYPE PLASTIC (P) or GLASS (G): G
PRESERVATIVE USED: 4°C
TYPE OF ANALYSIS: Methane, Ethane, Ethene

DATE YEAR 2003	TIME	SAMPLE ID	LOCATION ID	TOP DEPTH (FT)	BOTTOM DEPTH (FT)	MATRIX (GW, SO, SW, SD, QC, ETC.)	COLLECTION METHOD GRAP (G) COMP (C)	No. OF CONTAINERS								COMMENTS
11/21	1003	16GWT1001	16GW T10	-	-	GW	G	2	2							
11/21	1316	16GWT1201	16GW T12	-	-	GW	G	2	2							
11/21	0000	16FD11210301	QC	-	-	GW	G	2	2							DUP OF 16GWT1201
11/22	1200	16GWT1301	16GW T13	-	-	GW	G	2	2							

	DATE	TIME		DATE	TIME
1. RELINQUISHED BY	11-24-03	1900	1. RECEIVED BY FEDERAL EXPRESS	11-24-03	1900
2. RELINQUISHED BY			2. RECEIVED BY		
3. RELINQUISHED BY			3. RECEIVED BY		

COMMENTS

DISTRIBUTION: WHITE (ACCOMPANIES SAMPLE) YELLOW (FIELD COPY) PINK (FILE COPY)

4/02R
FORM NO. TtNUS-001

TETRA TECH NUS, INC.

CHAIN OF CUSTODY

NUMBER 4827

PAGE 1 OF 1

PROJECT NO:	FACILITY:	PROJECT MANAGER	PHONE NUMBER	LABORATORY NAME AND CONTACT:
CTO N9060 0279	NSWC CRANE	RALPH BASINSKI	(412) 921-8308	LAUCKS / ANH HO
SAMPLERS (SIGNATURE)		FIELD OPERATIONS LEADER	PHONE NUMBER	ADDRESS
		TERRY ROSAHAI	(412) 921-8857	940 SOUTH HARNEY ST.
		CARRIER/WAYBILL NUMBER		CITY, STATE
		FED EX AB# 8412 2491 0570		SEATTLE WA 98108

STANDARD TAT ☒
RUSH TAT ☐
☐ 24 hr. ☐ 48 hr. ☐ 72 hr. ☐ 7 day ☐ 14 day

DATE YEAR 2003	TIME	SAMPLE ID	LOCATION ID	TOP DEPTH (FT)	BOTTOM DEPTH (FT)	MATRIX (GW, SO, SW, SD, QC, ETC.)	COLLECTION METHOD GRAP (G) COMP (C)	No. OF CONTAINERS	Explosives SW 846 8330	Explosives SW 846 8330	Total Misc. 6020	Total Metals & Hg 7470A	Nitrate + Nitrite (353.2)	Ammonia (350.1)	Dis Metals 6020 & Hg 7470A	Total Organic Carbon	COMMENTS
								CONTAINER TYPE PLASTIC (P) or GLASS (G)	G	G	P	P	P				
								PRESERVATIVE USED	4°C	4°C	4°C/HNO3	4°C/H2SO4	4°C/HNO3				
11/24	1615	13GWT3001	13GW T30	-	-	GW	G	6	2	2	1	1					
11/24	1732	13GWT3301	13GW T33	-	-	GW	G	2	2								
11/25	0845	13GWT3301		-	-	GW	G	4	-	2	1	1					
11/25	0845	13GWT3301-F		-	-	GW	G	4	-	-	-	-	1				
11/25	1150	13GWT1302	13GW T13	-	-	GW	G	6	2	2	1	1					
11/25	1347	13GWT1502	13GW T15	-	-	GW	G	6	2	2	1	1		*6			*DO MS/MSD ON TOC
11/25	1347	13GWT1502-F	13GW T15	-	-	GW	G	1	-	-	-	-	1				
11/25	0000	13FD11250301	QC	-	-	GW	G	2	-	-	-	-	-	2			
11/25	1425	13GWT2701	13GW T27	-	-	GW	G	6	2	2	1	1					

	DATE	TIME		DATE	TIME
1. RELINQUISHED BY	11-25-03	1900	1. RECEIVED BY FEDERAL EXPRESS	11-25-03	1900
2. RELINQUISHED BY			2. RECEIVED BY		
3. RELINQUISHED BY			3. RECEIVED BY		

COMMENTS

DISTRIBU[illegible] WHITE (ACCOMPANIES SAMPLE) YELLOW (FI[illegible]OPY) PINK (FILE COPY)

4/02R
FOR[illegible] TtNUS-001

TETRA TECH NUS, INC. CHAIN OF CUSTODY NUMBER 4828 PAGE 1 OF

PROJECT NO:	FACILITY:	PROJECT MANAGER	PHONE NUMBER	LABORATORY NAME AND CONTACT:
CTO N9060 0279	NSWC CRANE	RALPH BASINSKI	(412) 921-8308	LAUCKS / ANH HO
SAMPLERS (SIGNATURE)		FIELD OPERATIONS LEADER	PHONE NUMBER	ADDRESS
TR FOR S. GRIER		TERRY ROJAHN	(412) 921-8857	940 SOUTH HARNEY ST.
		CARRIER/WAYBILL NUMBER		CITY, STATE
		FED. EX. AB # 8412 2491 0434		SEATTLE WA 98108

STANDARD TAT ☒
RUSH TAT ☐
☐ 24 hr. ☐ 48 hr. ☐ 72 hr. ☐ 7 day ☐ 14 day

DATE YEAR 2003	TIME	SAMPLE ID	LOCATION ID	TOP DEPTH (FT)	BOTTOM DEPTH (FT)	MATRIX (GW, SO, SW, SD, QC, ETC.)	COLLECTION METHOD GRAP (G) COMP (C)	No. OF CONTAINERS	Volatiles SW 846 8260B	Volatiles SW 846 8015B	Explosives & Misc. Expl. SW 846 8330	Total Metals & Hg 6020 & 7470A	Dis. Metals 6020 & 7470A	Nitrate + Nitrite 353.2	Sulfate & Chloride	Total Organic Carbon	COMMENTS
CONTAINER TYPE PLASTIC (P) or GLASS (G)									G	G	G	P	P	P	P	G	
PRESERVATIVE USED									4°C/HCl	4°C/HCl	4°C	4°C/HNO3	4°C/HNO3	4°C/H2SO4	4°C	4°C/H3PO4	
12/3	1500	TB12030301	QC	–	–	QC	G	4	2	2							TRIP BLANK
12/3	1520	16RB12030301	QC	–	–	QC	G	13	3	3	4	1	–	1	1		BLADDER PUMP
12/3	1535	13RB12030301	QC	–	–	QC	G	6	–	–	4	1	–	*1	–		PE Tubing, Peristaltic
12/3	1535	13RB12030301-F	QC	–	–	QC	G	1	–	–	–	–	1	–	–		" " "
12/3	1600	16RB12030302	QC	–	–	QC	G	15	3	3	4	1	–	1	1	2	TEFLON " "
12/4	1018	13GWT0903 (TR)	13GW T09	–	–	GW	G	6	–	–	4	1	–	*1			
12/4	1050	13GWT4301	13GW T43	–	–	GW	G	6	–	–	4	1	–	*1			
12/4	1150	13GWT3401	13GW T34	–	–	GW	G	6	–	–	4	1	–	*1			
12/4	1510	13GWT2202	13GW T22	–	–	GW	G	6	–	–	4	1	–	*1			
12/4	1700	13GWT4401	13GW T44	–	–	GW	G	6	–	–	4	1	–	*1			
12/4	0000	13FD12040301	QC	–	–	GW	G	6	–	–	4	1	–	*1			DUP FROM 13GWT0902
12/5	0800	16RB12050301	QC	–	–	QC	G	6	3	3	–	–	–	–			BUCKET BIT RINSATE
12/5	1027	16GWT1701	16GW T17	–	–	GW	G	13	3	3	4	1	–	1	1		

1. RELINQUISHED BY	DATE	TIME	1. RECEIVED BY	DATE	TIME
	12/05/03	1900	FEDERAL EXPRESS	12/05/03	1900
2. RELINQUISHED BY	DATE	TIME	2. RECEIVED BY	DATE	TIME
3. RELINQUISHED BY	DATE	TIME	3. RECEIVED BY	DATE	TIME

COMMENTS * ALSO ANALYZE FOR AMMONIA

DISTRIBUTION: WHITE (ACCOMPANIES SAMPLE) YELLOW (FIELD COPY) PINK (FILE COPY)

4/02R
FORM NO. TINUS-001

TETRA TECH NUS, INC.

CHAIN OF CUSTODY

NUMBER 4829

PAGE 1 OF 1

PROJECT NO:	FACILITY:	PROJECT MANAGER	PHONE NUMBER	LABORATORY NAME AND CONTACT:
CTO N9060 0279	NSWC CRANE	RALPH BASINSKI	(412) 921-8307	LAUCKS / ANH HO
SAMPLERS (SIGNATURE)		FIELD OPERATIONS LEADER	PHONE NUMBER	ADDRESS
Terry Rojahn		TERRY ROJAHN	(412) 921-8857	940 SOUTH HARNEY ST
		CARRIER/WAYBILL NUMBER		CITY, STATE
		FED. EX. AB# 8412 2491 0434		SEATTLE WA 98108

STANDARD TAT ☒
RUSH TAT ☐
☐ 24 hr. ☐ 48 hr. ☐ 72 hr. ☐ 7 day ☐ 14 day

DATE YEAR 2003	TIME	SAMPLE ID	LOCATION ID	TOP DEPTH (FT)	BOTTOM DEPTH (FT)	MATRIX (GW, SO, SW, SD, QC, ETC.)	COLLECTION METHOD GRAP (G) COMP (C)	No. OF CONTAINERS	VOLATILES (ENCORE) SW 846 8260B	VOLATILES (ENCORE) SW 846 8015B	Total Metals & Hg 6020 & 7470A	Total Metals & Hg 6020 & 7471A					COMMENTS
CONTAINER TYPE PLASTIC (P) or GLASS (G)									P	P	P	G					
PRESERVATIVE USED									4°C	4°C	4°C/HNO3	4°C					
12/5	0940	16SB470405	16SB 47	4	5	SO	G	6	3	3							
12/5	1015	16SB480203	16SB 48	2	3	SO	G	18	9	9							DO MS/MSD
12/5	1050	16SB490405	16SB 49	4	5	SO	G	6	3	3							
12/5	1115	16SB500103	16SB 50	1	3	SO	G	6	3	3							
12/5	0000	16FD12050301	QC	-	-	SO	G	6	3	3							DUP OF 16SB500103 ~~16FD12050301~~ TR
12/5	1130	16RB12050302	QC	-	-	QC	G	1	-	-	1						BUCKET BIT RINSATE
12/5	1155	16SS420002	16SB 42	0	2	SO	G	1	-	-	-	1					
12/5	1210	16SS430002	16SB 43	0	2	SO	G	2	-	-	-	2					
12/5	1225	16SS440002	16SB 44	0	2	SO	G	1	-	-	-	1					
12/5	1237	16SS450002	16SB 45	0	2	SO	G	1	-	-	-	1					
12/5	1255	16SS460002	16SB 46	0	2	SO	G	1	-	-	-	1					
12/5	0000	16FD12050302	QC	-	-	SO	G	1	-	-	-	1					DUP FROM 16SS450002

1. RELINQUISHED BY Terry Rojahn	DATE 12/05/03	TIME 1900	1. RECEIVED BY FEDERAL EXPRESS	DATE 12/05/03	TIME 1900
2. RELINQUISHED BY	DATE	TIME	2. RECEIVED BY	DATE	TIME
3. RELINQUISHED BY	DATE	TIME	3. RECEIVED BY	DATE	TIME

COMMENTS

DISTRIBUTION: WHITE (ACCOMPANIES SAMPLE) YELLOW (FIELD COPY) PINK (FILE COPY)

FORM NO. TtNUS-001 4/02R

TETRA TECH NUS, INC. CHAIN OF CUSTODY NUMBER 4831 PAGE 1 OF

PROJECT NO:	FACILITY:	PROJECT MANAGER	PHONE NUMBER	LABORATORY NAME AND CONTACT:
CTO N9060 0279	NSWC CRANE	RALPH BASINSKI	(412) 921-8308	LAUCKS / ANN HO
SAMPLERS (SIGNATURE)		FIELD OPERATIONS LEADER	PHONE NUMBER	ADDRESS
Scott Brin / Terry Rojahn		TERRY ROJAHN	(412) 921-8857	940 SOUTH HARNEY ST.
		CARRIER/WAYBILL NUMBER		CITY, STATE
		FED. EX. AB # 8412 2491 0560		SEATTLE, WA 98108

STANDARD TAT ☒
RUSH TAT ☐
☐ 24 hr. ☐ 48 hr. ☐ 72 hr. ☐ 7 day ☐ 14 day

CONTAINER TYPE PLASTIC (P) or GLASS (G): G
PRESERVATIVE USED: 4°C

TYPE OF ANALYSIS: PCBS SW-846 8082

DATE YEAR 2003	TIME	SAMPLE ID	LOCATION ID	TOP DEPTH (FT)	BOTTOM DEPTH (FT)	MATRIX (GW, SO, SW, SD, QC, ETC.)	COLLECTION METHOD GRAP (G) COMP (C)	No. OF CONTAINERS	PCBS SW-846 8082	COMMENTS
12/8	0848	13SS160002	13SB16	0	2	SO	G	1	1	
12/8	0900	13SB160204	↓	2	4	SO	G	1	1	
12/8	0900	13SS170002	13SB17	0	2	SO	G	1	1	
12/8	0905	13SB170204	↓	2	4	SO	G	1	1	
12/8	0912	13S~~B~~S180002 (TR)	13SB18	0	2	SO	G	1	1	
12/8	0930	13SB180204	↓	2	4	SO	G	1	1	
12/8	0920	13SS190002	13SB19	0	2	SO	G	1	1	
12/8	0930	13SB190203	↓	2	3	SO	G	1	1	
12/8	1005	13SS200002	13SB20	0	2	SO	G	1	1	
12/8	1004	13SS210002	13SB21	0	2	SO	G	1	1	
12/8	1019	13SB210204	↓	2	4	SO	G	2	2	DO MS/MSD
12/8	1030	13S~~B~~S220002 (TR)	13SB22	0	2	SO	G	1	1	
12/8	1045	13SB220204	↓	0	4	SO	G	1	1	

	DATE	TIME		DATE	TIME
1. RELINQUISHED BY Terry Rojahn	12-8-03	1900	1. RECEIVED BY FEDERAL EXPRESS	12-8-03	1900
2. RELINQUISHED BY	DATE	TIME	2. RECEIVED BY	DATE	TIME
3. RELINQUISHED BY	DATE	TIME	3. RECEIVED BY	DATE	TIME

COMMENTS

DISTRIBUTION: WHITE (ACCOMPANIES SAMPLE) YELLOW (FIELD COPY) PINK (FILE COPY)

4/02R
FORM NO. TINUS-001

TETRA TECH NUS, INC.

CHAIN OF CUSTODY

NUMBER 4832

PAGE 1 OF 1

PROJECT NO:	FACILITY:	PROJECT MANAGER	PHONE NUMBER	LABORATORY NAME AND CONTACT:
CTO N9060 0279	NSWC CRANE	RALPH BASINSKI	(412) 921-8308	LAUCKS / ANH HO
SAMPLERS (SIGNATURE) Scott Dirin, Terry Rojahn		FIELD OPERATIONS LEADER: TERRY ROJAHN	PHONE NUMBER (412) 921-8857	ADDRESS: 940 SOUTH HARNEY ST
		CARRIER/WAYBILL NUMBER: FED. EX. AB # 841224910560		CITY, STATE: SEATTLE WA. 98108

STANDARD TAT ☒
RUSH TAT ☐
☐ 24 hr. ☐ 48 hr. ☐ 72 hr. ☐ 7 day ☐ 14 day

CONTAINER TYPE PLASTIC (P) or GLASS (G): G G

PRESERVATIVE USED: 4°C 4°C

TYPE OF ANALYSIS: PCBs SW-846 8082; PCBs 1L Amber Glass

DATE YEAR 2003	TIME	SAMPLE ID	LOCATION ID	TOP DEPTH (FT)	BOTTOM DEPTH (FT)	MATRIX (GW, SO, SW, SD, QC, ETC.)	COLLECTION METHOD GRAP (G) COMP (C)	No. OF CONTAINERS	PCBs SW-846 8082	PCBs 1L Amber Glass							COMMENTS
12/8	1036	135S230002	135B 23	0	2	SO	G	1	1								
12/8	1046	135B230204	↓	2	4	SO	G	1	1								
12/8	1110	135S240002	135B 24	0	2	SO	G	1	1								
12/8	1120	135B240203	↓	2	4	SO	G	1	1								
12/8	1104	135S250002 (TA)	135B 25	0	2	SO	G	1	1								
12/8	1115	135B250204	↓	2	4	SO	G	1	1								
12/8	0000	13FD12080301	QC	–	–	SO	G	1	1								DUP FROM 135B180204
12/8	0000	13FD12080302	QC	–	–	SO	G	1	1								DUP FROM 135B210204
12/8	0740	13RB12080301	QC	–	–	AQ	G	2	–	2							BUCKET BIT
12/8	0937	13RB12080302	QC	–	–	AQ	G	2	–	2							BUCKET BIT

	DATE	TIME		DATE	TIME
1. RELINQUISHED BY: Terry Rojahn	12-8-03	1900	1. RECEIVED BY: FEDERAL EXPRESS	12-8-03	1900
2. RELINQUISHED BY			2. RECEIVED BY		
3. RELINQUISHED BY			3. RECEIVED BY		

COMMENTS

DISTRIBUTION: WHITE (ACCOMPANIES SAMPLE) YELLOW (FIELD COPY) PINK (FILE COPY)

4/02R
FORM NO. TINUS-001

TETRA TECH NUS, INC.

CHAIN OF CUSTODY

NUMBER 4833

PAGE 1 OF 2

PROJECT NO:	FACILITY:	PROJECT MANAGER	PHONE NUMBER	LABORATORY NAME AND CONTACT:
CTO N9060 0279	NSWC CRANE	RALPH BASINSKI	(412) 921-8308	LAUCKS / ANN HO
SAMPLERS (SIGNATURE)		FIELD OPERATIONS LEADER	PHONE NUMBER	ADDRESS
		TERRY ROJAHN	(412) 921-8857	940 SOUTH HARNEY ST.
		CARRIER/WAYBILL NUMBER		CITY, STATE
		FED. EX AB # 8412 2491 0560		SEATTLE, WA 98108

STANDARD TAT ☒
RUSH TAT ☐
☐ 24 hr. ☐ 48 hr. ☐ 72 hr. ☐ 7 day ☐ 14 day

CONTAINER TYPE PLASTIC (P) or GLASS (G): G G G P P P P G

PRESERVATIVE USED: 4°C/HCl, 4°C/HCl, 4°C, 4°C/HNO3, 4°C/HNO3, 4°C/H2SO4, 4°C, 4°C/H3PO4

TYPE OF ANALYSIS: Volatiles SW 846 8260B; Volatiles SW 846 8015B; Explosives & Misc. Expl. SW-846 8330; Total Metals & Hg 6020/7470A; Dis Metals & Hg 6020/7470A; Nitrate Nitrite 353.2; Sulfate & Chloride; Total Organic Carbon SW846 9060

DATE YEAR 2003	TIME	SAMPLE ID	LOCATION ID	TOP DEPTH (FT)	BOTTOM DEPTH (FT)	MATRIX (GW, SO, SW, SD, QC, ETC.)	COLLECTION METHOD GRAB (G) COMP (C)	No. OF CONTAINERS	Volatiles SW 846 8260B	Volatiles SW 846 8015B	Explosives & Misc. Expl. SW-846 8330	Total Metals & Hg 6020/7470A	Dis Metals & Hg 6020/7470A	Nitrate Nitrite 353.2	Sulfate & Chloride	Total Organic Carbon SW846 9060	COMMENTS
12/6	0700	TB12060301	QC	-	-	QC	G	4	2	2							
12/6	0905	16SW0102	16SW 01	-	-	SW	G	6	3	3							
12/6	0935	16SW0202	16SW 02	-	-	SW	G	6	3	3							
12/6	1008	16SW0702	16SW 07	-	-	SW	G	6	3	3							
12/6	0000	16FD12060301	QC	-	-	SW	G	6	3	3							DUP FROM 16SW0202
12/6	1030	16GWT0801	16GW T08	-	-	GW	G	8	3	3	*1	*1					* MIN. VOL WELL VERY SLOW RECHARGE
12/6	1330	16GWT1101	16GW T11	-	-	GW	G	8	3	3	*1	1					* MIN VOL. FOR EXPLOSIVES
12/6	1352	16GWT1501	16GW T15	-	-	GW	G	15	3	3	4	1	—	1	1	2	
12/6	1352	16GWT1501-F	↓	-	-	GW	G	1	—	-	—	—	1				
12/7	0850	13GWT0202	13GW T02	-	-	GW	G	6	—	-	4	1	—	**1			* ALSO ANALYZE AMMONIA
12/7	1000	16GWT1101	16GW T11	-	-	GW	G	1	-	-	*1	—	-				* MIN VOL. FOR MISC. EXPLOSIVES
12/7	1000	16GWT1101-F	↓	-	-	GW	G	1	—	—	—	—	1				
12/7	1410	13GWT2801	13GW T28	-	-	GW	G	1	-	-	4	1	—	**1			~~MIN VOL FOR EXPLOSIVES~~ TC

	DATE	TIME		DATE	TIME
1. RELINQUISHED BY	12-8-03	1900	1. RECEIVED BY FEDERAL EXPRESS	12-8-03	1900
2. RELINQUISHED BY			2. RECEIVED BY		
3. RELINQUISHED BY			3. RECEIVED BY		

COMMENTS ** ALSO ANALYZE FOR AMMONIA

DISTRIBUTION: WHITE (ACCOMPANIES SAMPLE) YELLOW (FIELD COPY) PINK (FILE COPY)

4/02R

FORM NO. TtNUS-001

TETRA TECH NUS, INC.

CHAIN OF CUSTODY

NUMBER 4834

PAGE 1 OF 1

PROJECT NO: CTO N9060 0279	FACILITY: NSWC CRANE	PROJECT MANAGER: RALPH BASINSKI	PHONE NUMBER: (412) 921-8368	LABORATORY NAME AND CONTACT: LAUCKS / ANH HO
SAMPLERS (SIGNATURE)		FIELD OPERATIONS LEADER: TERRY ROJAHN	PHONE NUMBER: (412) 921-8857	ADDRESS: 940 SOUTH HARNEY ST
		CARRIER/WAYBILL NUMBER: FED. EX AB# 8412849 10560		CITY, STATE: SEATTLE WA 98108

STANDARD TAT ☒
RUSH TAT ☐
☐ 24 hr. ☐ 48 hr. ☐ 72 hr. ☐ 7 day ☐ 14 day

CONTAINER TYPE PLASTIC (P) or GLASS (G): G G P P P

PRESERVATIVE USED: 4°C 4°C 4°C/HNO3 4°C/H2SO4 4°C/HNO3

DATE YEAR 2003	TIME	SAMPLE ID	LOCATION ID	TOP DEPTH (FT)	BOTTOM DEPTH (FT)	MATRIX (GW, SO, SW, SD, QC, ETC.)	COLLECTION METHOD GRAP (G) COMP (C)	No. OF CONTAINERS	Explosives SW 8468330	Misc. Explosives SW 8460 8330	Total Metals & Hg 6020 / 7470A	Nitrate + Nitrite 353.2	Ammonia 350.1	Dis. Metals & Hg 6020 / 7470A				COMMENTS
12/7	1538	13GWT1802	13GW T18	—	—	GW	G	6	2	2	1	1						
12/7	1538	13GWT1802-F	↓	—	—	GW	G	1	-	—	—	-	1					
12/8	1500	13RB12080303	QC	—	—	QC	G	6	2	2	1	1						Bladder Pump
12/7	1410	13GWT2801-F	13GW T28	—	—	GW	G	1	-	—	—	-	1					
12/8	1050	13GWT3601	13GW T36	—	—	GW	G	18	6	6	3	3						DO MS/MSD
12/8	0000	13FD12080303	QC	—	—	QC	G	6	2	2	1	1						DUP OF 13GWT3601

1. RELINQUISHED BY	DATE 12-8-03	TIME 1900	1. RECEIVED BY FEDERAL EXPRESS	DATE 12-8-03	TIME 1900
2. RELINQUISHED BY	DATE	TIME	2. RECEIVED BY	DATE	TIME
3. RELINQUISHED BY	DATE	TIME	3. RECEIVED BY	DATE	TIME

COMMENTS

DISTRIBU[illegible] WHITE (ACCOMPANIES SAMPLE) YELLOW (FI[illegible]OPY) PINK (FILE COPY)

4/02R
FOR[illegible]O. TtNUS-001

TETRA TECH NUS, INC. CHAIN OF CUSTODY NUMBER 4835 PAGE 1 OF

PROJECT NO:	FACILITY:	PROJECT MANAGER	PHONE NUMBER	LABORATORY NAME AND CONTACT:
CTO N9060 279	NSWC CRANE	RALPH BASINSKI	(412) 921-8308	MICROSEEPS / DEBBIE HALLO
SAMPLERS (SIGNATURE)		FIELD OPERATIONS LEADER: TERRY ROJAHN	PHONE NUMBER: (412) 921-8857	ADDRESS: 220 WILLIAM PITT WAY
		CARRIER/WAYBILL NUMBER: FED. EX. AB# 8412 2491 0559		CITY, STATE: Pittsburgh, PA 15238

STANDARD TAT ☒
RUSH TAT ☐
☐ 24 hr. ☐ 48 hr. ☐ 72 hr. ☐ 7 day ☐ 14 day

CONTAINER TYPE PLASTIC (P) or GLASS (G): G
PRESERVATIVE USED: 4°C

DATE YEAR 2003	TIME	SAMPLE ID	LOCATION ID	TOP DEPTH (FT)	BOTTOM DEPTH (FT)	MATRIX (GW, SO, SW, SD, QC, ETC.)	COLLECTION METHOD GRAP (G) COMP (C)	No. OF CONTAINERS	TYPE OF ANALYSIS: Methane, Ethane & Ethene							COMMENTS
12/6	1352	16GWT1501	16GW T15	-	-	GW	G	2	2							

1. RELINQUISHED BY	DATE	TIME	1. RECEIVED BY	DATE	TIME
Terry Rojahn	12-8-03	1900	FEDERAL EXPRESS	12-8-03	1900
2. RELINQUISHED BY	DATE	TIME	2. RECEIVED BY	DATE	TIME
3. RELINQUISHED BY	DATE	TIME	3. RECEIVED BY	DATE	TIME

COMMENTS

DISTRIBUTION: WHITE (ACCOMPANIES SAMPLE) YELLOW (FIELD COPY) PINK (FILE COPY)

4/02R
FORM NO. TtNUS-001

TETRA TECH NUS, INC.

CHAIN OF CUSTODY | NUMBER 4836 | PAGE 1 OF 1

PROJECT NO:	FACILITY:	PROJECT MANAGER	PHONE NUMBER	LABORATORY NAME AND CONTACT:
CTO N9060 0279	NSWC CRANE	RALPH BASINSKI	(412) 921-8308	LACICKS / ANH HO
SAMPLERS (SIGNATURE)		FIELD OPERATIONS LEADER	PHONE NUMBER	ADDRESS
		TERRY ROJAHN	(412) 921-8857	940 SOUTH HARNEY ST
		CARRIER/WAYBILL NUMBER		CITY, STATE
		FED EX AB# 8412 2491 0548 (TR) 26		SEATTLE, WA 98108

Terry Rojahn FOR S. GRIMM

STANDARD TAT ☒
RUSH TAT ☐
☐ 24 hr. ☐ 48 hr. ☐ 72 hr. ☐ 7 day ☐ 14 day

DATE YEAR 2003	TIME	SAMPLE ID	LOCATION ID	TOP DEPTH (FT)	BOTTOM DEPTH (FT)	MATRIX (GW, SO, SW, SD, QC, ETC.)	COLLECTION METHOD GRAP (G) COMP (C)	No. OF CONTAINERS	Explosives & Misc Exp. SW-846 8330	Total Metals & Hg 6020 / 7470A	Nitrate + Nitrite (353.2)	Ammonia (350.1)	Dis Metals & Hg 6020 / 7470A				COMMENTS
CONTAINER TYPE PLASTIC (P) or GLASS (G)									G	P	P	P					
PRESERVATIVE USED									4°C	4°C/HNO3	4°C/H2SO4	4°C/HNO3					
12/7	1300	13GWT0602	13GW T06	–	–	GW	G	1	*1								*MIN VOL.
12/8	1558	13GWT4501	13GW T45	–	–	GW	G	2	*2								*MIN VOL.
12/9	1110	13GWT4701	13GW T47	–	–	GW	G	6	4	1	1						
12/9	1124	13GWT4601	13GW T46	–	–	GW	G	6	4	1	1						
12/9	1645	13GWT4501	13GW T45	–	–	GW	G	1	–	1	–						
12/9	1730	13GWT0602	13GW T06	–	–	GW	G	1	–	*1	–						*MIN. VOL ~300ml
12/10	1145	13GWT3501	13GW T35	–	–	GW	G	5	3	1	1						
12/10	1145	13GWT3501-F	13GW T35	–	–	GW	G	1	–	–	–	1					
12/10	1300	13GWT4501	13GW T45	–	–	GW	G	1	–	–	*1						*MIN VOL ~150ml
12/10	1300	13GWT4501-F	13GW T45	–	–	GW	G	1	–	–	–	1					*MIN VOL ~500ml
12/10	1500	TB12100301	QC	–	–	QC	G	4	–	–	–	–	2	2			TRIP BLANK
12/10	1510	RB12100301	QC	–	–	QC	G	12	4	1	1	–	3	3			DIS. BAILER

	DATE	TIME		DATE	TIME
1. RELINQUISHED BY Terry Rojahn	12-10-03	1900	1. RECEIVED BY FEDERAL EXPRESS	12-10-03	1900
2. RELINQUISHED BY	DATE	TIME	2. RECEIVED BY	DATE	TIME
3. RELINQUISHED BY	DATE	TIME	3. RECEIVED BY	DATE	TIME

COMMENTS

DISTRIBUTION: WHITE (ACCOMPANIES SAMPLE) YELLOW (FIELD COPY) PINK (FILE COPY)

4/02R
FORM NO. TtNUS-001

TETRA TECH NUS, INC. CHAIN OF CUSTODY NUMBER 4837 PAGE 1 OF

PROJECT NO: CTO N9060 0279	FACILITY: NSWC CRANE	PROJECT MANAGER: RALPH BASINSKI	PHONE NUMBER: (412) 921-8308	LABORATORY NAME AND CONTACT: LAUCKS / ANH HO
SAMPLERS (SIGNATURE)		FIELD OPERATIONS LEADER: TERRY ROJAHN	PHONE NUMBER: (412) 921-8857	ADDRESS: 940 SOUTH HARNEY ST
		CARRIER/WAYBILL NUMBER: FED EX AB# 8412 2491 0504		CITY, STATE: SEATTLE WA 98108

STANDARD TAT ☒
RUSH TAT ☐
☐ 24 hr. ☐ 48 hr. ☐ 72 hr. ☐ 7 day ☐ 14 day

CONTAINER TYPE PLASTIC (P) or GLASS (G): P P
PRESERVATIVE USED: 4C / HNO3 4C / H2SO4

TYPE OF ANALYSIS: Dis. Metals + Hg 6020 / 7470A; Nitrate + Nitrite (353.2); Ammonia 350.1

DATE YEAR 2003	TIME	SAMPLE ID	LOCATION ID	TOP DEPTH (FT)	BOTTOM DEPTH (FT)	MATRIX (GW, SO, SW, SD, QC, ETC.)	COLLECTION METHOD GRAB (G) COMP (C)	No. OF CONTAINERS	Dis. Metals + Hg 6020 / 7470A	Nitrate + Nitrite (353.2)						COMMENTS
12/10	1800	13GWT0602-F	13GW T06	-	-	GW	G	1	1	-						MIN. Vol. ~ 300ml
12/11	1615	13GWT0602	↓	-	-	GW	G	1	-	1						MIN. Vol ~

1. RELINQUISHED BY	DATE 12/11/03	TIME 1900	1. RECEIVED BY FEDERAL EXPRESS	DATE 12/11/03	TIME 1900
2. RELINQUISHED BY	DATE	TIME	2. RECEIVED BY	DATE	TIME
3. RELINQUISHED BY	DATE	TIME	3. RECEIVED BY	DATE	TIME

COMMENTS

DISTRIBUTION: WHITE (ACCOMPANIES SAMPLE) YELLOW (FIELD COPY) PINK (FILE COPY)

4/02R
FORM NO. TtNUS-001

TETRA TECH NUS, INC.

CHAIN OF CUSTODY

NUMBER 4394

PAGE 1 OF 1

PROJECT NO: CTO N9060 0279	FACILITY: NSWC CRANE	PROJECT MANAGER: RALPH BASINSKI	PHONE NUMBER: (412) 921-8308
		FIELD OPERATIONS LEADER: TERRY ROJAHN	PHONE NUMBER: (412) 921-8857
		CARRIER/WAYBILL NUMBER: FED-EX AB# 8412 2491 0993	

LABORATORY NAME AND CONTACT: MICROSEEPS / DEBBIE HALLO

ADDRESS: 220 WILLIAM PITT WAY

CITY, STATE: PITTSBURGH, PA 15238

SAMPLERS (SIGNATURE): [signature]

STANDARD TAT ☒
RUSH TAT ☐
☐ 24 hr. ☐ 48 hr. ☐ 72 hr. ☐ 7 day ☐ 14 day

CONTAINER TYPE PLASTIC (P) or GLASS (G): G

PRESERVATIVE USED: 4°C

TYPE OF ANALYSIS: Methane Ethane & Ethene

DATE YEAR 2004	TIME	SAMPLE ID	LOCATION ID	TOP DEPTH (FT)	BOTTOM DEPTH (FT)	MATRIX (GW, SO, SW, SD, QC, ETC.)	COLLECTION METHOD GRAB (G) COMP (C)	No. OF CONTAINERS	Methane Ethane & Ethene	COMMENTS
1/25	0853	16GWT1801	16MW T18	-	-	GW	G	2	2	

1. RELINQUISHED BY [signature]	DATE 1-26-04	TIME 1900	1. RECEIVED BY FEDERAL EXPRESS	DATE 1-26-04	TIME 1900
2. RELINQUISHED BY	DATE	TIME	2. RECEIVED BY	DATE	TIME
3. RELINQUISHED BY	DATE	TIME	3. RECEIVED BY	DATE	TIME

COMMENTS

DISTRIBUTION: WHITE (ACCOMPANIES SAMPLE) YELLOW (FIELD COPY) PINK (FILE COPY)

4/02R
FORM TINUS-001

TETRA TECH NUS, INC. CHAIN OF CUSTODY NUMBER 4395 PAGE 1 OF

PROJECT NO:	FACILITY:	PROJECT MANAGER	PHONE NUMBER	LABORATORY NAME AND CONTACT:
CTO N9060 0279	NSWC CRANE	RALPH BASINSKI	(412) 921-8308	LAUCKS / ANN HO
SAMPLERS (SIGNATURE)		FIELD OPERATIONS LEADER	PHONE NUMBER	ADDRESS
Terry Rojahn		TERRY ROJAHN	(412) 921-8857	940 South HARNEY St.
		CARRIER/WAYBILL NUMBER		CITY, STATE
		FED. EX. AB # 8412 2491 0971		SEATTLE WA 98108

STANDARD TAT ☒ RUSH TAT ☐
☐ 24 hr. ☐ 48 hr. ☒ 72 hr. ☐ 7 day ☐ 14 day

VOLATILES & EXPLOSIVES

DATE YEAR 2004	TIME	SAMPLE ID	LOCATION ID	TOP DEPTH (FT)	BOTTOM DEPTH (FT)	MATRIX (GW, SO, SW, SD, QC, ETC.)	COLLECTION METHOD GRAB (G) COMP (C)	No. OF CONTAINERS	VOLATILES (SW 8260B)	VOLATILES (SW 8015B)	EXPLOSIVES & MISC. EXPLOSIVES (8330)	TOTAL METALS & Hg (6020)	NITRATE & NITRITE & (7470A) EPA 353.2	SULFATE & CHLORIDE	DIS. METALS & Hg (6020) & (7470A)		COMMENTS
CONTAINER TYPE PLASTIC (P) or GLASS (G)									G	G	G	P	P	P	P		
PRESERVATIVE USED									4°C/HCl	4°C/HCl	4°C	4°C/HNO3	4°C/H2SO4	4°C	4°C/HNO3		
1/25	0853	16GWT1801	16MW T18	-	-	GW	G	11	3	3	2	1	1	1	-		
1/25	0853	16GWT1801-F	16MW T18	-	-	GW	G	1	-	-	-	-	-	-	1		

1. RELINQUISHED BY Terry Rojahn	DATE 1-26-04	TIME 1900	1. RECEIVED BY FEDERAL EXPRESS	DATE 1-26-04	TIME 1900
2. RELINQUISHED BY	DATE	TIME	2. RECEIVED BY	DATE	TIME
3. RELINQUISHED BY	DATE	TIME	3. RECEIVED BY	DATE	TIME

COMMENTS

DISTRIBUTION: WHITE (ACCOMPANIES SAMPLE) YELLOW (FIELD COPY) PINK (FILE COPY)

4/02R
FORM NO. TtNUS-001

APPENDIX C.5.1
SWMU 13 AND SWMU 16
MONITORING WELL INSPECTION SHEETS
ROUND 1

MONITORING WELL INSPECTION SHEET

Well ID: WES-14-01-83

Time: 1348 Date: 4/15/03 Inspector's Name:

Inspection Item	Types of Problems	Status		Observation
		S	U	
Well Tag	Is it in-place, legible	NA	NA	No WELL TAG; WAS ID W/ Paint marker
Well security	Condition protective case, cap, lock	NA	NA	only PVC stick up
Well pad	Concrete or gravel & condition	✓		6" CASING; W/ soil around base
Well seal	Condition of...	✓		
Area Immediately around well pad	Record any evidence of/or standing water in area of well	✓		
Dedicated sampling equipment	Condition of...	NA	NA	
PVC Riser	Condition of riser & survey reference point	✓		MARKED REFERENCE POINT

Comments: (3) RR tracks as bollards; OK

Signature(s) [signature]

Note: S= Satisfactory, U= Unsatisfactory
Check one, if unsatisfactory explain

NSWC Crane
Field Form
Revision: 1
January: 1999

MONITORING WELL INSPECTION SHEET

Well ID: WES-14-02-83

Time: 1710 Date: 4/15/03 Inspector's Name:

Inspection Item	Types of Problems	Status		Observation
		S	U	
Well Tag	Is it in-place, legible	NA	NA	NO TAG; PAINTED ID ON Protective casing
Well security	Condition protective case, cap, lock	✓		
Well pad	Concrete or gravel & condition	✓		Gravel & grass
Well seal	Condition of...	✓		
Area Immediately around well pad	Record any evidence of/or standing water in area of well	✓		Dry grass; no standing H_2O
Dedicated sampling equipment	Condition of...	NA	NA	
PVC Riser	Condition of riser & survey reference point	✓		

Comments: (2) RR tracks for bollards

Signature(s) [signature]

Note: S= Satisfactory, U= Unsatisfactory
Check one, if unsatisfactory explain

NSWC Crane
Field Form
Revision: 1
January: 1999

MONITORING WELL INSPECTION SHEET

Well ID: WES-14-3-83

Time: 1506 Date: 4/11/03 Inspector's Name: T. Rosano

Inspection Item	Types of Problems	Status		Observation
		S	U	
Well Tag	Is it in-place, legible	–	–	No well tag.
Well security	Condition protective case, cap, lock		✓	Repaired cap
Well pad	Concrete or gravel & condition	✓		
Well seal	Condition of...	✓		
Area Immediately around well pad	Record any evidence of/or standing water in area of well	✓		
Dedicated sampling equipment	Condition of...	NA	NA	
PVC Riser	Condition of riser & survey reference point	✓		

Comments: (3) R.R. tracks, No Protective casing

→ Repaired lock 5/5/03 cap.

Signature(s) [signature]

Note: S= Satisfactory, U= Unsatisfactory
Check one, if unsatisfactory explain

NSWC Crane
Field Form
Revision: 1
January: 1999

MONITORING WELL INSPECTION SHEET

Well ID: WES-14-4-03

Time: 1300 Date: 4/11/03 Inspector's Name: T. ROJAHN

Inspection Item	Types of Problems	Status		Observation
		S	U	
Well Tag	Is it in-place, legible	–	–	NO WELL TAG;
Well security	Condition protective case, cap, lock	✓		REPLACE BROKEN J-PLUG
Well pad	Concrete or gravel & condition		✓	BROKEN, WILL REPAIR
Well seal	Condition of…		✓	
Area Immediately around well pad	Record any evidence of/or standing water in area of well	✓		NO STANDING H_2O; GROUND SOFT
Dedicated sampling equipment	Condition of…	–	–	NA
PVC Riser	Condition of riser & survey reference point	✓		

Comments: (3) R.R. TRACKS No protective casing

Built NEW WELL PAD 5/5/03

Signature(s) [signature]

Note: S= Satisfactory, U= Unsatisfactory
Check one, if unsatisfactory explain

NSWC Crane
Field Form
Revision: 1
January: 1999

MONITORING WELL INSPECTION SHEET

Well ID: WES-14-5-83

Time: 1607 **Date:** 4/11/03 **Inspector's Name:** T. Rojahn

Inspection Item	Types of Problems	Status		Observation
		S	U	
Well Tag	Is it in-place, legible	NA	NA	Paint ID
Well security	Condition protective case, cap, lock	✓		
Well pad	Concrete or gravel & condition	✓	--	Gravel
Well seal	Condition of...	✓		
Area Immediately around well pad	Record any evidence of/or standing water in area of well	✓		
Dedicated sampling equipment	Condition of...	NA	NA	
PVC Riser	Condition of riser & survey reference point	✓		

Comments:
(3) bollards; No protective casing
RR tracks

Signature(s) [signature]

Note: S= Satisfactory, U= Unsatisfactory
Check one, if unsatisfactory explain

NSWC Crane
Field Form
Revision: 1
January: 1999

APPENDIX C.6.1
SWMU 13 AND SWMU 16
MONITORING WELL DEVELOPMENT RECORDS
ROUND 1

Tetra Tech NUS, Inc.

MONITORING WELL DEVELOPMENT RECORD

Well: 13MW701
Site: SWMU 13
Date Installed: 3/30/03
Date Developed: 4/13/03
Dev. Method: Surged & Pumped
Pump Type: Whale Pump

Depth to Bottom (ft.): 17.95' TOC
Static Water Level Before (ft.): 7.71' TOC
Static Water Level After (ft.): DRY
Screen Length (ft.): 10'
One Well Volume (gal/L): 1.6 gal
Casing ID (in.): 2 inch PVC

Responsible Personnel: Bob Balkovec
Drilling Company: Bowser-Morner
Project Name: NSWC CRANE
Project Number: N9060 CTO 0279
PID Readings: Bore Hole 0.0 ppm
PID Readings: Breathing Zone 0.0 ppm

Time	Cumulative Water Volume (Gal.)	Flow Rate (mL/min.)	Water Level Readings (Ft. below TOC)	Temperature (Degrees C)	pH	Specific Conductance (Units µS/cm)	Turbidity (NTU)	Remarks (odor, color, etc.)
0850	START	21 gal/min	—	10.08	5.77	230	7999	DK. GRAY
0852	25 gal	~~27 gal~~	DRY	—	—	—	—	
0857	—	—	9.00	—	—	—	—	
0902	—	—	8.70	—	—	—	—	
0907	—	—	8.45	—	—	—	—	
0917	—	—	8.00	—	—	—	—	
0918	START	21 gal/min	—	10.80	5.46	223	925	LT. GRAY
0919	—	—	DRY	—	—	—	—	
0429	—	—	9.05	—	—	—	—	
0434	—	—	8.51	—	—	—	—	
0440	START	—	—	10.42	5.55	220	525.5	GRAY
0441	25 gal	—	DRY	—	—	—	—	
0451	START	—	9.20	10.98	5.01	225	7999	PULLED OUT PUMP TO DRAIN.
0452	—	—	DRY	—	—	—	—	
1002	START	—	9.70	10.99	5.00	228	7999	GRAY
1003	7 gal	—	DRY	—	—	—	—	GOOD PRODUCER

Tetra Tech NUS, Inc.

MONITORING WELL DEVELOPMENT RECORD

Well: 13MW102
Site: SWMU 13
Date Installed: 3/29/03
Date Developed: 4/13/03
Dev. Method: Surged & Pumped
Pump Type: Bailer (S.S.)

Depth to Bottom (ft.): 29.95
Static Water Level Before (ft.): 18.44
Static Water Level After (ft.): DRY
Screen Length (ft.): 10'
One Well Volume (gal/L): 1.9 gal
Casing ID (in.): 2 inch PVC

Responsible Personnel: T. Rojahn
Drilling Company: Bowser-Morner
Project Name: NSWC CRANE
Project Number: N9060 CTO 0279
PID Readings: Bore Hole 0 ppm
PID Readings: Breathing Zone 0 ppm

Time	Cumulative Water Volume (Gal.)	Flow Rate (mL/min.)	Water Level Readings (Ft. below TOC)	Temperature (Degrees C)	pH	Specific Conductance (Units _____)	Turbidity (NTU)	Remarks (odor, color, etc.)
1005		NA	18.44	—	—	—	—	
1010	~3.5	"	28.40	13.43	5.23	1.148	+1000	(DRY) GRAY BRN
1015		"	29.10	—	—	—	—	Recharge ~~Forced~~ TR
1020		"	27.65	—	—	—	—	"
1025		"	27.46	—	—	—	—	"
1030	~3.5	"	—	—	—	—	—	(Restart Purge)
1036	~4	"	(DRY)	14.58	5.42	0.712	+1000	(Dry) Gray Brn
1046		"	28.68	—	—	—	—	Recharge
1056		"	28.33	—	—	—	—	"
1057		"	Restart	14.03	5.43	1.193	+1000	(Restart purge)
1101	~4.5	"	(Dry)	—	—	—	—	(Dry)

Tetra Tech NUS, Inc.

MONITORING WELL DEVELOPMENT RECORD

Well: 13MW/T 03
Site: SWMU 13
Date Installed: 3/30/03
Date Developed: 4/13/03
Dev. Method: Surged & Pumped
Pump Type: WHALE

Depth to Bottom (ft.): 18.10
Static Water Level Before (ft.): 9.59
Static Water Level After (ft.): DRY
Screen Length (ft.): 10'
One Well Volume (gal/L): 1.5 gal
Casing ID (in.): 2 inch PVC

Responsible Personnel: T. ROJAHN
Drilling Company: Bowser-Morner
Project Name: NSWC CRANE
Project Number: N9060 CTO 0279
PID Readings: Bore Hole 0 ppm
PID Readings: Breathing Zone 0 ppm

Time	Cumulative Water Volume (Gal.)	Flow Rate (mL/min.)	Water Level Readings (Ft. below TOC)	Temperature (Degrees C)	pH	Specific Conductance (Units ____)	Turbidity (NTU)	Remarks (odor, color, etc.)
0851	0	~1 gal	9.59	—	—	—	—	START PURGE
0853	~ 2.5	—	(DRY)	10.20	5.72	0.435	+1000	BRN (DRY)
0859	↓	—	14.58	—	—	—	—	RECHARGE
0903	↓	—	14.30	—	—	—	—	↓
0908	↓	—	14.10	—	—	—	—	↓
0909	↓	—	~~(DRY)~~ TA	11.73	6.43	0.430	+1000	(Restart) BRN
0910	~ 3.5	—	(DRY)	—	—	—	—	(DRY)
0920	↓	—	14.58	—	—	—	—	RECHARGE
0930	↓	—	14.27	—	—	—	—	↓
0931	↓	—	(Restart)	10.92	5.72	0.412	+1000	(Restart)
0932	~ 4	—	(DRY)	—	—	—	—	(DRY)

Tetra Tech NUS, Inc.

MONITORING WELL DEVELOPMENT RECORD

Well: 13MW204
Site: SWMU 13
Date Installed: 3/30/03
Date Developed: 4/13/03
Dev. Method: Surged & Pumped
Pump Type: Waterra Pump

Depth to Bottom (ft.): 17.80'
Static Water Level Before (ft.): 13.88'
Static Water Level After (ft.): DRY
Screen Length (ft.): 10'
One Well Volume (gal/L): .8
Casing ID (in.): 2 inch PVC

Responsible Personnel: Bob Bauwec
Drilling Company: Bowser-Morner
Project Name: NSWC CRANE
Project Number: N9060 CTO 0279
PID Readings: Bore Hole 0.0 ppm
PID Readings: Breathing Zone 0.0 ppm

Time	Cumulative Water Volume (Gal.)	Flow Rate (mL/min.)	Water Level Readings (Ft. below TOC)	Temperature (Degrees C)	pH	Specific Conductance (Units uS/cm)	Turbidity (NTU)	Remarks (odor, color, etc.)
1356	START	3 1/gal/min	—	13.96	5.49	649	>2000	SURGED 1353-1356 BROWN
1358	—	—	DRY					
1408	—	—	15.00					
1418		—	14.50					
~~1420~~	~~START~~ START	—	—	14.10	5.61	531	>2000	
1423	3.2 gal	—	DRY					
1433	—	—	15.33					
1444	—	—	14.20					
1454	—	—	14.36					
1455	START	—	—	14.20	5.62	480	>2000	
1456	4 gal	—	DRY					

Tetra Tech NUS, Inc.

MONITORING WELL DEVELOPMENT RECORD

Well: 13MWT05
Site: SWMU 13
Date Installed: 3/29/03
Date Developed: 4/13/03
Dev. Method: Surged & Pumped
Pump Type: WHALE

Depth to Bottom (ft.): 19.15
Static Water Level Before (ft.): 7.96
Static Water Level After (ft.): DRY
Screen Length (ft.): 10'
One Well Volume (gal/L): ~1.9
Casing ID (in.): 2 inch PVC

Responsible Personnel: T. Rojahn
Drilling Company: Bowser-Morner
Project Name: NSWC CRANE
Project Number: N9060 CTO 0279
PID Readings: Bore Hole 0 ppm
PID Readings: Breathing Zone 0 ppm

Time	Cumulative Water Volume (Gal.)	Flow Rate (mL/min.)	Water Level Readings (Ft. below TOC)	Temperature (Degrees C)	pH	Specific Conductance (Units _____)	Turbidity (NTU)	Remarks (odor, color, etc.)
1123		~1gpm	7.96					Start Purge
1125	~2 gal	–	(DRY)	13.80	5.50	0.646	+1000	(DRY) ORANGE BRN
1133	↓	–	15.03	–	–	–	–	RECHARGE
1138		–	14.65	–	–	–	–	↓
1143	↓	–	14.30	–	–	–	–	↓
1143	~2 gal	–	Restart	13.96	5.49	0.649	+1000	(Restart) ORANGE BRN
1144	~3 gal	–	(Dry)	–	–	–	–	(DRY)
1154	↓	–	16.15	–	–	–	–	RECHARGE
1204	↓	–	15.31	–	–	–	–	↓
1204	~3 gal	–	Restart	13.96	5.49	0.649	+1000	(Restart) ORANGE BRN
1205	~4 gal	–	(Dry)	–	–	–	–	(DRY)

Tetra Tech NUS, Inc.

MONITORING WELL DEVELOPMENT RECORD

Well: 13MW706
Site: SWMU 13
Date Installed: 4/7/03
Date Developed: 4/12/03
Dev. Method: Surged & Pumped
Pump Type: WHALE

Depth to Bottom (ft.): 17.60
Static Water Level Before (ft.): 12.20
Static Water Level After (ft.): DRY
Screen Length (ft.): 10'
One Well Volume (gal/L): ~1 gal
Casing ID (in.): 2 inch PVC

Responsible Personnel: T. ROJAHN
Drilling Company: Bowser-Morner
Project Name: NSWC CRANE
Project Number: N9060 CTO 0279
PID Readings: Bore Hole 0.0 ppm
PID Readings: Breathing Zone 0.0 ppm

Time	Cumulative Water Volume (Gal.)	Flow Rate (mL/min.)	Water Level Readings (Ft. below TOC)	Temperature (Degrees C)	pH	Specific Conductance (Units _____)	Turbidity (NTU)	Remarks (odor, color, etc.)
0905	0	–	12.20	–	–	–	–	start purge
0907	1.5	~1 gpm	(DRY)	11.83	6.83	0.480	+1000	Lt. BRN
0912	↓	–	16.02	–	–	–	–	RECHARGE
0917	↓	–	15.94	–	–	–	–	↓
0922	↓	–	15.99	–	–	–	–	↓ Restart
0923	1.6	–	(DRY)	–	–	–	–	(DRY) Lt. BRN
0933	↓	–	16.80	–	–	–	–	RECHARGE
0943	1.7	–	16.72	→	→	→	→	(DRY) Lt. BRN Restart
0953	↓	–	16.35	–	–	–	–	RECHARGE
1003	↓	–	16.35	–	–	–	–	↓
1013	1.8	–	16.33	13.48	7.55	0.516	+1000	(DRY) ↓ Lt. BRN Restart

Tetra Tech NUS, Inc.

MONITORING WELL DEVELOPMENT RECORD

Well: 13MW707
Site: SWMU 13
Date Installed: 3/24/03
Date Developed: 4/13/03
Dev. Method: Surged & Pumped
Pump Type: WHALE Pump

Depth to Bottom (ft.): 17.95
Static Water Level Before (ft.): 4.14
Static Water Level After (ft.): DRY
Screen Length (ft.): 10'
One Well Volume (gal/L): 2.3
Casing ID (in.): 2 inch PVC

Responsible Personnel: BOB BALKOVEC
Drilling Company: Bowser-Morner
Project Name: NSWC CRANE
Project Number: N9060 CTO 0279
PID Readings: Bore Hole 0.0 ppm
PID Readings: Breathing Zone 0.0 ppm

Time	Cumulative Water Volume (Gal.)	Flow Rate (mL/min.)	Water Level Readings (Ft. below TOC)	Temperature (Degrees C)	pH	Specific Conductance (Units uS/cm)	Turbidity (NTU)	Remarks (odor, color, etc.)
1116	START	2 gal/min	—	—	—	—	—	SURGED 1113 - 1116 BROWN
1117	—	—	—	13.26	5.48	962	>2000	
1120	—	—	DRY	—	—	—	—	
1130	—	—	12.10	—	—	—	—	
1140	—	—	10.71	—	—	—	—	
1141	START	2 gal/min	—	13.46	5.49	649	>2000	
1143	—	—	DRY	—	—	—	—	ORANGE BROWN
1153	—	—	14.17	—	—	—	—	
1203	—	—	12.41	—	—	—	—	
1204	START	—	—	14.40	5.51	600	>2000	
1205	8 gal	—	DRY	—	—	—	—	

Tetra Tech NUS, Inc.

MONITORING WELL DEVELOPMENT RECORD

Well: 13MWT08
Site: SWMU 13
Date Installed: 3/30/03
Date Developed: 4/13/03
Dev. Method: Surged & Pumped
Pump Type: WHALE

Depth to Bottom (ft.): 17.50
Static Water Level Before (ft.): 4.68
Static Water Level After (ft.): DRY
Screen Length (ft.): 10'
One Well Volume (gal/L): 2.1 gal
Casing ID (in.): 2 inch PVC

Responsible Personnel: T.R. JAHN
Drilling Company: Bowser-Morner
Project Name: NSWC CRANE
Project Number: N9060 CTO 0279
PID Readings: Bore Hole 0 ppm
PID Readings: Breathing Zone 0 ppm

Time	Cumulative Water Volume (Gal.)	Flow Rate (mL/min.)	Water Level Readings (Ft. below TOC)	Temperature (Degrees C)	pH	Specific Conductance (Units mS/cm)	Turbidity (NTU)	Remarks (odor, color, etc.)
1358	0	~1gpm	4.68	—	—	—	—	Start Purge
1403	5	—	(DRY)	13.98	5.49	0.249	+1000	(DRY) ORANGE BRN
1408	↓	-	8.30	—	—	-	-	RECHARGE
1413		-	7.75	-	-	-	-	"
1418		-	7.30	-	-	-	-	"
1419	5	-	Restart	11.20	5.32	0.082	+1000	(Restart Purge) ORANGE BRN
1423	9	-	(DRY)	-	-	-	-	(DRY)
1428		-	10.32	-	-	-	-	RECHARGE
1433		-	9.67	-	-	-	-	"
1438		-	9.20	-	-	-	-	"
1443	↓	-	8.77	-	-	-	-	"
1443	9	-	Restart	10.84	5.39	0.093	+1000	(Restart Purge)
1445	12	-	(DRY)	-	-	-	-	(DRY)

Tetra Tech NUS, Inc.

MONITORING WELL DEVELOPMENT RECORD

Well: 13MWT09
Site: SWMU 13
Date Installed: 4/1/03
Date Developed: 4/14/03
Dev. Method: Surged & Pumped
Pump Type: WATTERRIA

Depth to Bottom (ft.): 23.00
Static Water Level Before (ft.): 8.93
Static Water Level After (ft.): 20.90
Screen Length (ft.): 10'
One Well Volume (gal/L): 2.2 gal
Casing ID (in.): 2 inch PVC

Responsible Personnel: T. ROJAHN
Drilling Company: Bowser-Morner
Project Name: NSWC CRANE
Project Number: N9060 CTO 0279
PID Readings: Bore Hole 0 ppm
PID Readings: Breathing Zone 0 ppm

Time	Cumulative Water Volume (Gal.)	Flow Rate (mL/min.)	Water Level Readings (Ft. below TOC)	Temperature (Degrees C)	pH	Specific Conductance (Units ____)	Turbidity (NTU)	Remarks (odor, color, etc.)
1547	0	–	8.93	–	–	–	–	Start Purge
1551	6 gal	–	21.00	13.58	5.21	0.683	+1000	DRY BRN
1556	↓	–	14.10	–	–	–	–	RECHARGE
1601	↓	–	11.41	–	–	–	–	↓
1606	6 gal	–	10.58	–	–	–	–	↓
1610	12 gal	–	20.80	12.52	4.73	0.636	+1000	DRY BRN
1620	↓	–	13.26	–	–	–	–	RECHARGE
1630	↓	–	10.92	–	–	–	–	↓
1633	17 gal	–	20.90	12.83	4.18	0.632	+1000	DRY BRN

Tetra Tech NUS, Inc.

MONITORING WELL DEVELOPMENT RECORD

Well: 13 MWT 10
Site: SWMU 13
Date Installed: 3/27/03
Date Developed: 4/12/03
Dev. Method: Surged & Pumped
Pump Type: WHALE

Depth to Bottom (ft.): 28.13
Static Water Level Before (ft.): 14.30
Static Water Level After (ft.): DRY
Screen Length (ft.): 10'
One Well Volume (gal/L): 2.2 gal
Casing ID (in.): 2 inch PVC

Responsible Personnel: T. Rojahn
Drilling Company: Bowser-Morner
Project Name: NSWC CRANE
Project Number: N9060 CTO 0279
PID Readings: Bore Hole 0 ppm
PID Readings: Breathing Zone 0 ppm

Time	Cumulative Water Volume (Gal.)	Flow Rate (mL/min.)	Water Level Readings (Ft. below TOC)	Temperature (Degrees C)	pH	Specific Conductance (Units _____)	Turbidity (NTU)	Remarks (odor, color, etc.)
1515	0	1gpm	TG-28.14.30					Start Pump
1516	—	—	—	17.13	4.99	0.453	+1000	Gray Brn
1524	5 gal	—	(DRY)	—	—	—	—	(DRY)
1526	↓	—	26.25	—	—	—	—	RECHARGE
1536	↓	—	25.70	—	—	—	—	↓
1541	5 gal	—	—	18.64	4.96	0.497	+1000	Gray Brn (Restart)
1542	6 gal	—	(DRY)	—	—	—	—	(DRY)
1552	↓	—	25.50	—	—	—	—	RECHARGE
1602	↓	—	24.85	—	—	—	—	↓
1603	6 gal	—	—	15.79	4.78	0.330	+1000	(Restart) Lt Gray Brn
1604	7 gal	—	(DRY)	—	—	—	—	(DRY)

Tetra Tech NUS, Inc.

MONITORING WELL DEVELOPMENT RECORD

Well: 13MW711
Site: SWMU 13
Date Installed: 3/28/03
Date Developed: 4/12/03
Dev. Method: Surged & Pumped
Pump Type: WHALE

Depth to Bottom (ft.): 17.75
Static Water Level Before (ft.): 8.30
Static Water Level After (ft.): DRY
Screen Length (ft.): 10'
One Well Volume (gal/L): 1.5 gal
Casing ID (in.): 2 inch PVC

Responsible Personnel: T. ROJAHN
Drilling Company: Bowser-Morner
Project Name: NSWC CRANE
Project Number: N9060 CTO 0279
PID Readings: Bore Hole 1.1 ppm
PID Readings: Breathing Zone 0.0 ppm

Time	Cumulative Water Volume (Gal.)	Flow Rate (mL/min.)	Water Level Readings (Ft. below TOC)	Temperature (Degrees C)	pH	Specific Conductance (Units ____)	Turbidity (NTU)	Remarks (odor, color, etc.)
1629	0	1.2gpm	8.30	—	—	—	—	Start PURGE
1630	↓	↓	—	12.86	4.68	0.200	+1000	Orange BRN
1633	~5gal	↓	(DRY)	—	—	—	—	(DRY)
1638	↓	—	14.00	—	—	—	—	RECHARGE
1643	↓	—	13.00	—	—	—	—	↓
1648	~5gal	—	12.15	—	—	—	—	↓
1649	↓	—	12.15	12.60	4.32	0.203	+1000	(Restart) Lt Orange BRN
1650	7gal	—	(DRY)	—	—	—	—	(DRY)
1700	↓	—	11.95	—	—	—	—	RECHARGE
1710	↓	—	11.34	—	—	—	—	↓
1721	7gal	—	—	12.09	4.56	0.205	+1000	Restart Lt Orange BRN
1723	8gal	—	(DRY)	—	—	—	—	(DRY)

Tetra Tech NUS, Inc.

MONITORING WELL DEVELOPMENT RECORD

Well: 13MWT12
Site: SWMU 13
Date Installed: 3/27/03
Date Developed: 4/13/03
Dev. Method: Surged & Pumped
Pump Type: WHALE

Depth to Bottom (ft.): 22.4
Static Water Level Before (ft.): 9.26
Static Water Level After (ft.): DRY
Screen Length (ft.): 10'
One Well Volume (gal/L): 3.9 gal
Casing ID (in.): 2 inch PVC

Responsible Personnel: T. ROJAHN
Drilling Company: Bowser-Morner
Project Name: NSWC CRANE
Project Number: N9060 CTO 0279
PID Readings: Bore Hole 0.2 ppm
PID Readings: Breathing Zone 0.0 ppm

Time	Cumulative Water Volume (Gal.)	Flow Rate (mL/min.)	Water Level Readings (Ft. below TOC)	Temperature (Degrees C)	pH	Specific Conductance (Units mS/cm)	Turbidity (NTU)	Remarks (odor, color, etc.)
1511	0	~1 gpm	9.26	—	—	—	—	Start Purge
1513	3 gal	—	(DRY)	13.68	5.06	0.136	+1000	(DRY) (BRN)
1518	↓	—	19.40	—	—	—	—	RECHARGE
1523	↓	—	18.94	—	—	—	—	↓
1528	↓	—	18.71	—	—	—	—	↓
1528	3 gal	—	Restart	13.59	5.65	0.160	+1000	Restart Purge
1529	4 gal	—	(DRY)	—	—	—	—	(DRY) (BRN)
1539	↓	—	20.22	—	—	—	—	RECHARGE
1549	↓	—	19.78	—	—	—	—	↓
1550	4 gal	—	Restart	14.75	5.70	0.167	+1000	Restart (BRN)
1551	5 gal	—	(DRY)	—	—	—	—	DRY

Tetra Tech NUS, Inc.

MONITORING WELL DEVELOPMENT RECORD

Well: 13MWT13
Site: SWMU 13
Date Installed: 4/23/03
Date Developed: 4/29/03
Dev. Method: Surged & Pumped
Pump Type: Wattenia

Depth to Bottom (ft.): 21.40
Static Water Level Before (ft.): 4.48
Static Water Level After (ft.): DRY
Screen Length (ft.): 10'
One Well Volume (gal/L): 2.7 gal
Casing ID (in.): 2 inch PVC

Responsible Personnel: T. Rosann
Drilling Company: Bowser-Morner
Project Name: NSWC CRANE
Project Number: N9060 CTO 0279
PID Readings: Bore Hole – ppm
PID Readings: Breathing Zone – ppm

Time	Cumulative Water Volume (Gal.)	Flow Rate (mL/min.)	Water Level Readings (Ft. below TOC)	Temperature (Degrees C)	pH	Specific Conductance (Units _____)	Turbidity (NTU)	Remarks (odor, color, etc.)
1308	–	–	4.48					
1312	(TR) ~~3.5~~ 6 gal	–	DRY	14.14	4.88	0.115	+1000	DRY
1317	↓	–	4.57	–	–	–	–	RECHARGE
1322		–	5.93	–	–	–	–	↓
1327		–	5.24	–	–	–	–	
1330	11 gal	–	DRY	14.55	4.99	0.136	+1000	DRY
1340	↓	–	6.02	–	–	–	–	RECHARGE
1350		–	5.10	–	–	–	–	↓
1353	17 gal	–	DRY	11.64	4.97	0.135	+100	DRY

Tetra Tech NUS, Inc.

MONITORING WELL DEVELOPMENT RECORD

Well: 13MWT14
Site: SWMU 13
Date Installed: 3/31/03
Date Developed: 4/15/03
Dev. Method: Surged & Pumped
Pump Type: Watteria

Depth to Bottom (ft.): 25.60
Static Water Level Before (ft.): 14.21
Static Water Level After (ft.): DRY
Screen Length (ft.): 10'
One Well Volume (gal/L): 1.8 gal
Casing ID (in.): 2 inch PVC

Responsible Personnel: T. Rosahn
Drilling Company: Bowser-Morner
Project Name: NSWC CRANE
Project Number: N9060 CTO 0279
PID Readings: Bore Hole 0 ppm
PID Readings: Breathing Zone 0 ppm

Time	Cumulative Water Volume (Gal.)	Flow Rate (mL/min.)	Water Level Readings (Ft. below TOC)	Temperature (Degrees C)	pH	Specific Conductance (Units _____)	Turbidity (NTU)	Remarks (odor, color, etc.)
0809	0	–	14.21	–	–	–	–	Start Purge
0811	3 gal	–	23.18	13.83	6.03	0.824	+1000	(DRY) Dark BRN
0816	↓	–	18.71	–	–	–	–	Recharge
0821	↓	–	16.80	–	–	–	–	↓
0826	3.5	–	15.24	–	–	–	–	↓
0829	6.5	–	23.20	14.20	5.98	0.749	+1000	(DRY) Dark BRN
0839	↓	–	15.73	–	–	–	–	Recharge
0849	6.5	–	14.73	–	–	–	–	↓
0852	10 gal	–	23.15	14.11	5.79	0.586	+1000	(DRY) Grey BRN

Tetra Tech NUS, Inc.

MONITORING WELL DEVELOPMENT RECORD

Well: 13 MWT15
Site: SWMU 13
Date Installed: 3/25/03
Date Developed: 4/12/03
Dev. Method: Surged & Pumped
Pump Type: WHALE

Depth to Bottom (ft.): 27.87
Static Water Level Before (ft.): 13.97
Static Water Level After (ft.): DRY
Screen Length (ft.): 10'
One Well Volume (gal/L): 2.2 gal
Casing ID (in.): 2 inch PVC

Responsible Personnel: T. ROSAHN
Drilling Company: Bowser-Morner
Project Name: NSWC CRANE
Project Number: N9060 CTO 0279
PID Readings: Bore Hole 0 ppm
PID Readings: Breathing Zone 0 ppm

Time	Cumulative Water Volume (Gal.)	Flow Rate (mL/min.)	Water Level Readings (Ft. below TOC)	Temperature (Degrees C)	pH	Specific Conductance (Units ____)	Turbidity (NTU)	Remarks (odor, color, etc.)
1146	0	—	13.97	—	—	—	—	BRN Start Purge
1148	↓	~1 gpm	—	13.19	5.32	0.336	+1000	BRN
1152	6	—	(DRY)	14.58	5.19	0.329	+1000	BRN (DRY)
1157	↓	—	25.0-	—	—	—	—	RECHARGE
1202	↓	—	24.31	—	—	—	—	↓
1207	↓	—	23.52	—	—	—	—	↓ Restart
1209	↓	—	—	21.12	5.2	0.402	+1000	BRN
1211	8.3	—	(DRY)	→	→	→	→	(DRY)
1221	↓	—	25.73	—	—	—	—	RECHARGE
1231	↓	—	24.13	—	—	—	—	↓ Restart
1232	↓			16.20	4.82	0.341	+1000	Lt. BRN
1235	~9		(DRY)	—	—	—	—	(DRY

Tetra Tech NUS, Inc.

MONITORING WELL DEVELOPMENT RECORD

Well: 13 MW T16
Site: SWMU 13
Date Installed: 3/27/03
Date Developed: 4/13/03
Dev. Method: Surged & Pumped
Pump Type: Whale Pump

Depth to Bottom (ft.): 17.31
Static Water Level Before (ft.): 12.18'
Static Water Level After (ft.): DRY
Screen Length (ft.): 10'
One Well Volume (gal/L): .8
Casing ID (in.): 2 inch PVC

Responsible Personnel: BJB
Drilling Company: Bowser-Morner
Project Name: NSWC CRANE
Project Number: N9060 CTO 0279
PID Readings: Bore Hole 0 ppm
PID Readings: Breathing Zone 0 ppm

Time	Cumulative Water Volume (Gal.)	Flow Rate (mL/min.)	Water Level Readings (Ft. below TOC)	Temperature (Degrees C)	pH	Specific Conductance (Units mS/cm)	Turbidity (NTU)	Remarks (odor, color, etc.)
1517	START							SURGED 1512-1517 BROWN
1520			BELOW PUMP	12.14	5.53	272	2404	
1521			DRY					
1531			15.28					
1541			15.05					
1542	START			12.71	5.60	241	>2000	
1543			DRY					
1553			15.55					
1603			15.40					
1604	START						~~>2000~~	
1605	3.4 gal		DRY	13.41	5.82	192	>2000	

Tetra Tech·NUS, Inc.

MONITORING WELL DEVELOPMENT RECORD

Well: 13MWT17
Site: SWMU V3
Date Installed: 3/26/03
Date Developed: 4/14/03
Dev. Method: Surged & Pumped
Pump Type: Waterra

Depth to Bottom (ft.): 20.30
Static Water Level Before (ft.): 10.91
Static Water Level After (ft.): 11.75
Screen Length (ft.): 10'
One Well Volume (gal/L): 1.6 gal
Casing ID (in.): 2 inch PVC

Responsible Personnel: T. ROHAN
Drilling Company: Bowser-Morner
Project Name: NSWC CRANE
Project Number: N9060 CTO 0279
PID Readings: Bore Hole 0 ppm
PID Readings: Breathing Zone 0 ppm

Time	Cumulative Water Volume (Gal.)	Flow Rate (mL/min.)	Water Level Readings (Ft. below TOC)	Temperature (Degrees C)	pH	Specific Conductance (Units ____)	Turbidity (NTU)	Remarks (odor, color, etc.)
0825	0	—	10.91					(BRN) START PURGE
0830	8	—	—	13.35	6.03	0.304	+1000	"
0835	16	—	—	12.73	5.71	0.191	+1000	"
0836	16	—	12.44	—	—	—	—	"
0847	24	—	12.92	11.75	5.51	0.192	+1000	(BRN) END PURGE

Tetra Tech NUS, Inc.

MONITORING WELL DEVELOPMENT RECORD

Well: 13MWT18
Site: SWMU 13
Date Installed: 3/26/03
Date Developed: 4/12/03
Dev. Method: Surged & Pumped
Pump Type: WHALE

Depth to Bottom (ft.): 33.44
Static Water Level Before (ft.): 16.71
Static Water Level After (ft.): DRY
Screen Length (ft.): 10'
One Well Volume (gal/L): 3gal
Casing ID (in.): 2 inch PVC

Responsible Personnel: T. Rouhan
Drilling Company: Bowser-Morner
Project Name: NSWC CRANE
Project Number: N9060 CTO 0279
PID Readings: Bore Hole 0 ppm
PID Readings: Breathing Zone 0 ppm

Time	Cumulative Water Volume (Gal.)	Flow Rate (mL/min.)	Water Level Readings (Ft. below TOC)	Temperature (Degrees C)	pH	Specific Conductance (Units _____)	Turbidity (NTU)	Remarks (odor, color, etc.)
1044	0	–	16.71					Start Purge
1045	↓	~1gpm	–	15.21	6.01	0.363	+1000	BRN
1049	↓	–	–	14.73	5.28	0.449	+1000	BRN
1050	5gal	–	(DRY)	→				(DRY)
1055	↓	–	31.60	–	–	–	–	Recharge
1100	↓	–	31.18	–	–	–	–	Recharge
1105	↓	–	30.78	15.32	5.20	0.379	+1000	↓ Restart BRN
1106	6gal	–	(DRY)	–	–	–	–	(DRY)
1116	↓	–	32.00	–	–	–	–	RECHARGE
1126	↓	–	31.25	15.26	4.80	0.367	+1000	lt BRN Restart
1127	7gal	–	(DRY)	–	–	–	–	(DRY)

Tetra Tech NUS, Inc.

MONITORING WELL DEVELOPMENT RECORD

Well: 13MWT19
Site: SWMU 13
Date Installed: 3/31/03
Date Developed: 4/14/03
Dev. Method: Surged & Pumped
Pump Type: WATTERMIA

Depth to Bottom (ft.): 22.05
Static Water Level Before (ft.): 9.88
Static Water Level After (ft.): 20.45
Screen Length (ft.): 10'
One Well Volume (gal/L): 1.8
Casing ID (in.): 2 inch PVC

Responsible Personnel: T. ROJAHN
Drilling Company: Bowser-Morner
Project Name: NSWC CRANE
Project Number: N9060 CTO 0279
PID Readings: Bore Hole 0 ppm
PID Readings: Breathing Zone 0 ppm

Time	Cumulative Water Volume (Gal.)	Flow Rate (mL/min.)	Water Level Readings (Ft. below TOC)	Temperature (Degrees C)	pH	Specific Conductance (Units _____)	Turbidity (NTU)	Remarks (odor, color, etc.)
1654	0	0	–	–	–	–	–	Start Purge
1656	2.5 gal	–	18.50	12.96	6.22	1.619	+1000	(Dry) Lt. Grey
1701	↓	–	16.33	–	–	–	–	Recharge
1706	↓	–	15.29	–	–	–	–	↓
1711	2.5 gal	–	14.46	–	–	–	–	↓
1713	4 gal	–	19.10	13.14	5.65	1.012	+1000	(Dry) Grey
1723	↓	–	16.28	–	–	–	–	Recharge
1733	4 gal	–	14.84	–	–	–	–	↓
1735	6 gal	–	20.45	12.49	5.57	1.207	+1000	Dry Grey

Tetra Tech NUS, Inc.

MONITORING WELL DEVELOPMENT RECORD

Well: 13MWT20
Site: SWMU 13
Date Installed: 4/1/03
Date Developed: 4/14/03
Dev. Method: Surged & Pumped
Pump Type: Watterenia

Depth to Bottom (ft.): 22.85
Static Water Level Before (ft.): 5.20
Static Water Level After (ft.): 22.85
Screen Length (ft.): 10'
One Well Volume (gal/L): 2.9
Casing ID (in.): 2 inch PVC

Responsible Personnel: T. Rojahn
Drilling Company: Bowser-Morner
Project Name: NSWC CRANE
Project Number: N9060 CTO 0279
PID Readings: Bore Hole 0 ppm
PID Readings: Breathing Zone 0 ppm

Time	Cumulative Water Volume (Gal.)	Flow Rate (mL/min.)	Water Level Readings (Ft. below TOC)	Temperature (Degrees C)	pH	Specific Conductance (Units _____)	Turbidity (NTU)	Remarks (odor, color, etc.)
1450	0	—	22.75	—	—	—	—	Start Purge
1453	3.5 gal	—	18.60	12.86	5.09	1.631	+1000	Dry Brn
1458	↓	—	16.91	—	—	—	—	Recharge
1503	↓	—	16.04	—	—	—	—	↓
1508	3.5 gal	—	15.48	—	—	—	—	↓
1509	4.25 gal	—	20.15	13.25	5.05	1.770	+1000	Dry Brn
1519	↓	—	18.62	—	—	—	—	Recharge
1529	4.25 gal	—	17.60	—	—	—	—	↓
1531	5 gal	—	22.95	13.80	4.63	1.600	+1000	Dry Brn

Tetra Tech NUS, Inc.

MONITORING WELL DEVELOPMENT RECORD

Well: 13MWT21
Site: SWMU 13
Date Installed: 3/28/03
Date Developed: 4/14/03
Dev. Method: Surged & Pumped
Pump Type: WATTERIA

Depth to Bottom (ft.): 17.76
Static Water Level Before (ft.): 9.45
Static Water Level After (ft.): 16.53
Screen Length (ft.): 10'
One Well Volume (gal/L): 1.5
Casing ID (in.): 2 inch PVC

Responsible Personnel: T. ROJAHN
Drilling Company: Bowser-Morner
Project Name: NSWC CRANE
Project Number: N9060 CTO 0279
PID Readings: Bore Hole 0 ppm
PID Readings: Breathing Zone 0 ppm

Time	Cumulative Water Volume (Gal.)	Flow Rate (mL/min.)	Water Level Readings (Ft. below TOC)	Temperature (Degrees C)	pH	Specific Conductance (Units ____)	Turbidity (NTU)	Remarks (odor, color, etc.)
0908	0	-	(TB) ~~17.76~~ 9.45	—	—	—	—	Start Purge
0911	4	-	15.00 (DRY)	12.69	5.66	0.207	+1000	(DRY) BRN Quick Recharge
0916	↓	-	12.60	—	—	-	-	RECHARGE
0921		-	11.71	—	-	-	-	↓
0926	↓	-	11.50	—	-	-	-	↓
0929	7	-	15.30 (DRY)	11.89	5.65	0.199	+1000	(DRY) BRN
0934	↓	-	13.16	-	-	-	-	RECHARGE
0939	↓	-	12.35	—	-	-	-	↓
0944	7	-	11.76	-	-	-	-	↓
0947	10	-	16.53	13.18	5.18	0.193	+1000	(DRY)

Tetra Tech NUS, Inc.

MONITORING WELL DEVELOPMENT RECORD

Well: 13MWT22
Site: SWMU 13
Date Installed: 3/29/03
Date Developed: 4/14/03
Dev. Method: Surged & Pumped
Pump Type: Watterra

Depth to Bottom (ft.): 17.76
Static Water Level Before (ft.): 10.62
Static Water Level After (ft.): DRY
Screen Length (ft.): 10'
One Well Volume (gal/L): 1.2
Casing ID (in.): 2 inch PVC

Responsible Personnel: T. Rojahn
Drilling Company: Bowser-Morner
Project Name: NSWC CRANE
Project Number: N9060 CTO 0279
PID Readings: Bore Hole 0 ppm
PID Readings: Breathing Zone 0 ppm

Time	Cumulative Water Volume (Gal.)	Flow Rate (mL/min.)	Water Level Readings (Ft. below TOC)	Temperature (Degrees C)	pH	Specific Conductance (Units _____)	Turbidity (NTU)	Remarks (odor, color, etc.)
1008	0	–	10.62	–	–	–	–	Start Purge
1011	2.5	–	16.30	11.84	5.36	0.211	+1000	DRY ORANGE BRN
1016	↓	–	14.98	–	–	–	–	RECHARGE
1021	↓	–	14.32	–	–	–	–	↓
1026	2.5	–	13.77	–	–	–	–	↓
1029	3.5	–	17.02	12.74	5.03	0.235	+1000	DRY
1034	↓	–	15.70	–	–	–	–	RECHARGE
1039	↓	–	14.48	–	–	–	–	↓
1044	3.5	–	13.41	–	–	–	–	↓
1046	4.5	–	16.15	12.58	5.04	0.222	+1000	(DRY) ORANGE BRN

Tetra Tech NUS, Inc.

MONITORING WELL DEVELOPMENT RECORD

Well: 13MWT 23
Site: SWMU 13
Date Installed: 4/1/03
Date Developed: 4/14/03
Dev. Method: Surged & Pumped
Pump Type: WATTEMRIA

Depth to Bottom (ft.): 24.50
Static Water Level Before (ft.): 8.28
Static Water Level After (ft.): 22.10
Screen Length (ft.): 10'
One Well Volume (gal/L): 2.6
Casing ID (in.): 2 inch PVC

Responsible Personnel: T. ROJAHN
Drilling Company: Bowser-Morner
Project Name: NSWC CRANE
Project Number: N9060 CTO 0279
PID Readings: Bore Hole 0 ppm
PID Readings: Breathing Zone 0 ppm

Time	Cumulative Water Volume (Gal.)	Flow Rate (mL/min.)	Water Level Readings (Ft. below TOC)	Temperature (Degrees C)	pH	Specific Conductance (Units _____)	Turbidity (NTU)	Remarks (odor, color, etc.)
1353	0	–	8.28	–	–	–	–	Start Purge
1355	4 gal	–	19.97	13.08	6.29	0.248	+1000	(Dry) Lt. BRN
1400	↓	–	17.28	–	–	–	–	RECHARGE
1405	↓	–	16.71	–	–	–	–	↓
1410	4 gal	–	16.10	–	–	–	–	↓
1411	5 gal	–	21.80	13.30	5.83	0.251	+1000	(DRY) BRN
1421	↓	–	19.02	–	–	–	–	Recharge
1431	5 gal	–	17.58	–	–	–	–	↓
1432	5.5 gal	–	22.10	13.27	5.89	0.254	+1000	(Dry)

Tetra Tech NUS, Inc.

MONITORING WELL DEVELOPMENT RECORD

Well: 13MWT 24
Site: SWMU 13
Date Installed: 4/1/03
Date Developed: 4/14/03
Dev. Method: Surged & Pumped
Pump Type: WATTERLIA

Depth to Bottom (ft.): 25.19
Static Water Level Before (ft.): 9.55
Static Water Level After (ft.): 23.90
Screen Length (ft.): 10'
One Well Volume (gal/L): 2.6
Casing ID (in.): 2 inch PVC

Responsible Personnel: T. ROJAHN
Drilling Company: Bowser-Morner
Project Name: NSWC CRANE
Project Number: N9060 CTO 0279
PID Readings: Bore Hole 0 ppm
PID Readings: Breathing Zone 0 ppm

Time	Cumulative Water Volume (Gal.)	Flow Rate (mL/min.)	Water Level Readings (Ft. below TOC)	Temperature (Degrees C)	pH	Specific Conductance (Units ____)	Turbidity (NTU)	Remarks (odor, color, etc.)
1255	0	–	TD 25 – 9.55	–	–	–	–	Start Purge
1258	4 gal	–	23.20	15.60	6.56	0.681	+1000	(Dry) BRN
1303	↓	–	21.39	–	–	–	–	Recharge
1308	↓	–	20.07	–	–	–	–	↓
1313	4 gal	–	19.22	–	–	–	–	↓
1315	6 gal	–	23.95	14.86	6.58	0.633	+1000	(Dry) BRN
1325	↓	–	22.50	–	–	–	–	Recharge
1335	6 gal	–	20.80	–	–	–	–	↓
1337	7.5 gal	–	23.90	14.31	6.47	0.674	+1000	Dry BRN

Tetra Tech NUS, Inc.

MONITORING WELL DEVELOPMENT RECORD

Well: 13MWT25
Site: SWMU 13
Date Installed: 3/28/03
Date Developed: 4/14/03
Dev. Method: Surged & Pumped
Pump Type: Watterra

Depth to Bottom (ft.): 18.02
Static Water Level Before (ft.): 10.59
Static Water Level After (ft.): 17.10
Screen Length (ft.): 10'
One Well Volume (gal/L): 1.2
Casing ID (in.): 2 inch PVC

Responsible Personnel: T. Rojahn
Drilling Company: Bowser-Morner
Project Name: NSWC CRANE
Project Number: N9060 CTO 0279
PID Readings: Bore Hole 0 ppm
PID Readings: Breathing Zone 0 ppm

Time	Cumulative Water Volume (Gal.)	Flow Rate (mL/min.)	Water Level Readings (Ft. below TOC)	Temperature (Degrees C)	pH	Specific Conductance (Units ____)	Turbidity (NTU)	Remarks (odor, color, etc.)
1100	0	-	10.59	-	-	-	-	Start Purge
1101	1.5	-	16.90	12.37	5.95	0.562	+1000	Dry (BRN)
1106	↓	-	15.53	-	-	-	-	Recharge
1111	↓	-	15.45	-	-	-	-	↓
1116	1.5	-	15.40	-	-	-	-	↓
1117	2.25	-	16.85	11.99	6.46	0.610	+1000	Dry (BRN)
1122	↓	-	16.65	-	-	-	-	Recharge
1127	↓	-	16.62	-	-	-	-	↓
1132	2.25	-	16.59	-	-	-	-	↓
1133	2.5	-	17.10	12.05	6.51	0.639	+1000	Dry

Tetra Tech NUS, Inc.

MONITORING WELL DEVELOPMENT RECORD

Well: 13MWT26
Site: SWMU 13
Date Installed: 3/28/03
Date Developed: 4/12/03
Dev. Method: Surged & Pumped
Pump Type: WHALE

Depth to Bottom (ft.): 22.17
Static Water Level Before (ft.): 9.84
Static Water Level After (ft.): DRY
Screen Length (ft.): 10'
One Well Volume (gal/L): 1.8 gal
Casing ID (in.): 2 inch PVC

Responsible Personnel: T. ROJAHN
Drilling Company: Bowser-Morner
Project Name: NSWC CRANE
Project Number: N9060 CTO 0279
PID Readings: Bore Hole 0.1 ppm
PID Readings: Breathing Zone 0.0 ppm

Time	Cumulative Water Volume (Gal.)	Flow Rate (mL/min.)	Water Level Readings (Ft. below TOC)	Temperature (Degrees C)	pH	Specific Conductance (Units ____)	Turbidity (NTU)	Remarks (odor, color, etc.)
0745	–	–	9.94	–	–	–	–	– Start Purge
0747	~1.8	~1gpm	(DRY)	–	–	–	+1000	Lt. BRN (DRY)
0754	↓	–	1903	–	–	–	–	Recharge
0759	↓	–	1875	–	–	–	–	↓
0804	↓	–	1941	–	–	–	–	↓ Restart
0805	~2.5	–	(DRY)	11.64	6.90	0.415	+1000	(DRY) Lt. BRN
0815	↓	–	19.60	–	–	–	–	Recharge
0825	↓	–	19.18	–	–	–	–	↓ Restart
0826	~3.4	–	(DRY)	11.80	6.68	0.389	+1000	(DRY) Lt. BRN
0836	↓	–	20.45	–	–	–	–	RECHARGE
0846	↓	–	20.03	–	–	–	<	↓ Restart
0847	~4.0	–	(DRY)	12.02	6.59	0.367	+1000	(DRY) Lt BRN

Tetra Tech NUS, Inc.

EXISTING

MONITORING WELL DEVELOPMENT RECORD

Well: WES-14-01-83
Site: SWMU 16
Date Installed: 1983
Date Developed: 4/15/03
Dev. Method: Surged & Pumped
Pump Type: WHALE

Depth to Bottom (ft.): MEAS. 54.05
Static Water Level Before (ft.): 31.35
Static Water Level After (ft.): DRY
Screen Length (ft.): 4.67
One Well Volume (gal/L): 3.8 include sump
Casing ID (in.): 2 inch PVC pump 2' off bottom of sump

Responsible Personnel: T. ROJAHN
Drilling Company: SEE RECORDS
Project Name: NSWC CRANE
Project Number: N9060 CTO 0279
PID Readings: Bore Hole 0 ppm
PID Readings: Breathing Zone 0 ppm

Time	Cumulative Water Volume (Gal.)	Flow Rate (mL/min.)	Water Level Readings (Ft. below TOC)	Temperature (Degrees C)	pH	Specific Conductance (Units ____)	Turbidity (NTU)	Remarks (odor, color, etc.)
1246	0	~1gpm	31.35	—	—	—	+1000	Start Pump (Grey)
1253	8gal	—	—	15.29	6.15	4.707	310	CLOUDY
1255	10gal	—	DRY	—	—	—	—	DRY
1300	↓	—	*	—	—	—	—	RECHARGE
1305	↓	—	*	—	—	—	—	↓
1310	10gal	—	*	—	—	—	—	↓
1325	↓	—	47.40	— (Pump Not Working)	→	→	→	~~Restart Purge~~ TK Pulled pump to check water level
1330	↓	-	47.20	→	→	→	→	RECHARGE to slow
1335	↓	-	47.07	→	→	→	→	to ~~pump~~ TK Fill tubing
1340	10 gal	-	46.95	→	→	→	→	AND pulk water out well.

* M-scope probe wouldn't pass pumps in series; no water levels taken during recharge

Tetra Tech NUS, Inc.

EXISTING

MONITORING WELL DEVELOPMENT RECORD

Well: WES-14-02-83
Site: SWMU 16
Date Installed: 1983
Date Developed: 4/15/03
Dev. Method: Surged & Pumped
Pump Type: Waterra

Depth to Bottom (ft.): 28.74
Static Water Level Before (ft.): 14.76
Static Water Level After (ft.): DRY
Screen Length (ft.): 9.04'
One Well Volume (gal/L): 2.2
Casing ID (in.): 2 inch PVC

Responsible Personnel: T. Rouahn
Drilling Company: Check Records
Project Name: NSWC CRANE
Project Number: N9060 CTO 0279
PID Readings: Bore Hole 0 ppm
PID Readings: Breathing Zone 0 ppm

Time	Cumulative Water Volume (Gal.)	Flow Rate (mL/min.)	Water Level Readings (Ft. below TOC)	Temperature (Degrees C)	pH	Specific Conductance (Units _____)	Turbidity (NTU)	Remarks (odor, color, etc.)
1623	0	–	14.76	–	–	–	–	Start Purge
1628	8	–	DRY	18.59	6.22	2.087	+1000	Lt BRN (DRY)
1633	↓	–	14.97	–	–	–	–	Recharge
1638	↓	–	18.90	–	–	–	–	↓
1643	8	–	15.90	–	–	–	–	↓
1648	14	–	DRY	13.43	6.64	0.922	+1000	(DRY) Lt. BRN
1658	↓	–	18.13	–	–	–	–	Recharge
1708	14	–	16.02	–	–	–	–	↓
1718	20	–	DRY	12.14	8.00	0.382	+1000	(DRY) Lt Grey

Tetra Tech NUS, Inc.

EXISTING

MONITORING WELL DEVELOPMENT RECORD

Historic - 38.4

Well: WES-14-3-83
Site: SWMU 16
Date Installed: 1983
Date Developed: 4/11/03
Dev. Method: Surged & Pumped
Pump Type: WHALE

Depth to Bottom (ft.): MEAS. 38.25
Static Water Level Before (ft.): 18.58 (TOC PVC)
Static Water Level After (ft.): DRY
Screen Length (ft.): 9.11'
One Well Volume (gal/L): 3.3 gal
Casing ID (in.): 2 inch PVC

Responsible Personnel: T. ROJAHN
Drilling Company: UNKOWN
Project Name: NSWC CRANE
Project Number: N9060 CTO 0279
PID Readings: Bore Hole – ppm
PID Readings: Breathing Zone – ppm

Time	Cumulative Water Volume (Gal.)	Flow Rate (mL/min.)	Water Level Readings (Ft. below TOC)	Temperature (Degrees C)	pH	Specific Conductance (Units _____)	Turbidity (NTU)	Remarks (odor, color, etc.)
1416	0	—	18.58	—	—	—	—	GRAY BROWN
1422	↓	—	—	14.71	5.61	0.766	—	" "
1425	6.5	~	DRY	—	—	—	180	DRY 51 Cloudy
1440	6.5	—	25.98	—	—	—	—	—
1442	↓	—	—	14.79	5.71	0.977	27	CLEAR
1443	8.0	—	DRY	—	—	—	—	DRY
1453	↓	—	28.45'	→				RECHARGE
1458	8.0	—	26.85'	→				RECHARGE
1459	↓	—	—	15.18	5.76	1.063	32	CLEAR
1501	10.0		DRY	→				DRY

Tetra Tech NUS, Inc.

EXISTING

MONITORING WELL DEVELOPMENT RECORD

Historic = 49.0'

Well: WES-1404-83
Site: SWMU 6
Date Installed: 1983
Date Developed: 4/11/03
Dev. Method: Surged & Pumped
Pump Type: WHALE

Depth to Bottom (ft.): MEAS = 41.47 (TOC) BEFORE; 49'0 AFTER PURGE
Static Water Level Before (ft.): 27.47
Static Water Level After (ft.): 27.23 @ 1301
Screen Length (ft.): 9.09
One Well Volume (gal/L): 3.5 gal
Casing ID (in.): 2 inch PVC

Responsible Personnel: T. ROJAHN
Drilling Company: UNKNOWN
Project Name: NSWC CRANE
Project Number: N9060 CTO 0279
PID Readings: Bore Hole - ppm
PID Readings: Breathing Zone - ppm

Time	Cumulative Water Volume (Gal.)	Flow Rate (mL/min.)	Water Level Readings (Ft. below TOC)	Temperature (Degrees C)	pH	Specific Conductance (Units uS/cm)	Turbidity (NTU)	Remarks (odor, color, etc.)
1224	0	—	27.47	—	—	—	—	MILKY
1229	15L	300ml	—	14.83	4.94	0.768	ERROR 2 (+1000)	CLOUDY/milky white sand
1235	—	—	27.80	—	—	—	145	SL Cloudy
1237	8 gal	360ml	27.90	14.47	4.10	742	50	CLEAR
1247	16 gal	—	27.92	14.42	3.79	784	11	CLEAR
1252	-	—	—	14.40	3.76	785	8	CLEAR
1255	24 gal	→						Stop Purge

Tetra Tech NUS, Inc.

EXISTING

MONITORING WELL DEVELOPMENT RECORD

Well: WES-14.5-83
Site: SWMU 16
Date Installed: 1983
Date Developed: 04/11/03
Dev. Method: Surged & Pumped
Pump Type: WHALE

Depth to Bottom (ft.): Meas: 52.43 (Historic 53.3)
Static Water Level Before (ft.): 33.00
Static Water Level After (ft.): *
Screen Length (ft.): 9.25
One Well Volume (gal/L): ~ 8.4
Casing ID (in.): 2 inch PVC

Responsible Personnel: T. Rojahn
Drilling Company: UNKNOWN
Project Name: NSWC CRANE
Project Number: N9060 CTO 0279
PID Readings: Bore Hole ____ ppm
PID Readings: Breathing Zone ____ ppm

Time	Cumulative Water Volume (Gal.)	Flow Rate (mL/min.)	* Water Level Readings (Ft. below TOC)	Temperature (Degrees C)	pH	Specific Conductance (Units ____)	Turbidity (NTU)	Remarks (odor, color, etc.)
1523	0	—	—	—	—	—	—	GRAY
1528	↓	—	—	14.66	6.21	0.815	+1000	TAN BRN
1531	8	—	—	—	—	—	—	—
1533	↓	—	—	14.06	6.11	0.797	+1000	TAN BRN
1536	14	—	—	—	—	—	—	—
1540	19	—	—	14.16	6.08	0.805	500	TAN
1544	24	—	—	14.09	5.95	0.788	280	SL. TAN
1548	29	—	—	14.18	5.90	0.786	700	STOP PUMP LET WELL RECHARGE
1558	29	—	—	—	—	—	—	RESTART PURGE
1602	34	—	—	14.50	5.42	0.706	12	CLEAR

* Cannot get probe passed series of WHALE pumps.

Tetra Tech NUS, Inc.

MONITORING WELL DEVELOPMENT RECORD

Well: 16MWT01
Site: SWMU 16
Date Installed: 4/8/03
Date Developed: 4/15/03
Dev. Method: Surged & Pumped
Pump Type: WATTERRIA

Depth to Bottom (ft.): 26.65
Static Water Level Before (ft.): 22.72
Static Water Level After (ft.): 25.99
Screen Length (ft.): 10'
One Well Volume (gal/L): 0.7
Casing ID (in.): 2 inch PVC

Responsible Personnel: T. ROJAHN
Drilling Company: Bowser-Morner
Project Name: NSWC CRANE
Project Number: N9060 CTO 0279
PID Readings: Bore Hole 0 ppm
PID Readings: Breathing Zone 0 ppm

Time	Cumulative Water Volume (Gal.)	Flow Rate (mL/min.)	Water Level Readings (Ft. below TOC)	Temperature (Degrees C)	pH	Specific Conductance (Units ____)	Turbidity (NTU)	Remarks (odor, color, etc.)
1525	0	–	22.72	–	–	–	–	Start Purge
1527	1 gal	–	25.66	19.10	6.30	0.352	+1000	Dry (Grey Dark)
1532	↓	–	25.40	–	–	–	–	RECHARGE
1537	↓	–	25.33	–	–	–	–	↓
1542	1 gal	–	25.31	–	–	–	–	↓
1543	1.25	–	25.98	17.61	6.17	0.639	+1000	Dry (Grey)
1553	↓	–	25.87	–	–	–	–	RECHARGE
1603	1.25	–	25.87	–	–	–	–	↓
1605	1.50	–	25.99	19.20	6.49	0.603	+1000	(Grey) (Dry)

Tetra Tech NUS, Inc.

MONITORING WELL DEVELOPMENT RECORD

Well: 16MWT02
Site: SWMU 16
Date Installed: 4/11/03
Date Developed: 4/15/03
Dev. Method: Surged & Pumped
Pump Type: WATTERIA

Depth to Bottom (ft.): 21.08
Static Water Level Before (ft.): 11.28
Static Water Level After (ft.): 20.25
Screen Length (ft.): 10'
One Well Volume (gal/L): 1.6 gal
Casing ID (in.): 2 inch PVC

Responsible Personnel: T. RIJAHRI
Drilling Company: Bowser-Morner
Project Name: NSWC CRANE
Project Number: N9060 CTO 0279
PID Readings: Bore Hole 0 ppm
PID Readings: Breathing Zone 0 ppm

Time	Cumulative Water Volume (Gal.)	Flow Rate (mL/min.)	Water Level Readings (Ft. below TOC)	Temperature (Degrees C)	pH	Specific Conductance (Units _____)	Turbidity (NTU)	Remarks (odor, color, etc.)
0929	0	–	11.28	–	–	–	–	Start PURGE
0931	2.5 gal	–	19.05	11.94	6.03	0.397	+1000	(DRY) (BRN)
0936	↓	–	17.21	–	–	–	–	RECHARGE
0941	↓	–	16.71	–	–	–	–	↓
0946	2.5 gal	–	16.16	–	–	–	–	↓
0948	3.5	–	19.80	12.34	6.33	0.356	+1000	(DRY) (BRN)
0958	↓	–	18.36	–	–	–	–	RECHARGE
1008	3.5 gal	–	17.41	–	–	–	–	↓
1010	4.5 gal	–	20.25	12.64	6.15	0.342	+1000	(DRY) (BRN)

Tetra Tech NUS, Inc.

MONITORING WELL DEVELOPMENT RECORD

Well: 16MWT03
Site: SWMU 16
Date Installed: 4/10/03
Date Developed: 4/15/03
Dev. Method: Surged & Pumped
Pump Type: WATTERRIA

Depth to Bottom (ft.): 38.07
Static Water Level Before (ft.): 27.92
Static Water Level After (ft.): 36.74
Screen Length (ft.): 10'
One Well Volume (gal/L): 1.6 gal
Casing ID (in.): 2 inch PVC

Responsible Personnel: T. ROJAHN
Drilling Company: Bowser-Morner
Project Name: NSWC CRANE
Project Number: N9060 CTO 0279
PID Readings: Bore Hole 0 ppm
PID Readings: Breathing Zone 0 ppm

Time	Cumulative Water Volume (Gal.)	Flow Rate (mL/min.)	Water Level Readings (Ft. below TOC)	Temperature (Degrees C)	pH	Specific Conductance (Units _____)	Turbidity (NTU)	Remarks (odor, color, etc.)
1025	0	—	27.92	—	—	—	—	START PURGE
1030	3.5	—	37.10	16.03	6.17	0.402	+1000	(DRY) (GREY)
1035	↓	—	35.65	—	—	—	—	RECHARGE
1040	↓	—	35.05	—	—	—	—	↓
1045	3.5	—	34.52	—	—	—	—	↓
1047	5.0	—	37.30	15.74	6.13	0.454	+1000	(DRY) (GREY)
1057	↓	—	35.95	—	—	—	—	RECHARGE
1107	5.0	—	34.67	—	—	—	—	↓
1109	6.0	—	36.74	14.43	5.81	0.627	+1000	(DRY) (GREY)

Tetra Tech NUS, Inc.

MONITORING WELL DEVELOPMENT RECORD

Well: 16MWT04
Site: SWMU 16
Date Installed: 4/9/03
Date Developed: 4/15/03
Dev. Method: Surged & Pumped
Pump Type: WATTERIA

Depth to Bottom (ft.): 27.40
Static Water Level Before (ft.): 12.32
Static Water Level After (ft.): 26.63
Screen Length (ft.): 10'
One Well Volume (gal/L): 2.4 gal
Casing ID (in.): 2 inch PVC

Responsible Personnel: T. ROJAHN
Drilling Company: Bowser-Morner
Project Name: NSWC CRANE
Project Number: N9060 CTO 0279
PID Readings: Bore Hole 0 ppm
PID Readings: Breathing Zone 0 ppm

Time	Cumulative Water Volume (Gal.)	Flow Rate (mL/min.)	Water Level Readings (Ft. below TOC)	Temperature (Degrees C)	pH	Specific Conductance (Units ____)	Turbidity (NTU)	Remarks (odor, color, etc.)
1425	0	–	12.32	–	–	–	–	START PURGE
1427	3 gal	–	DRY	16.08	5.55	0.346	+1000	(DRY) BRN
1432	↓	–	19.92	–	–	–	–	RECHARGE
1437	↓	–	17.41	–	–	–	–	↓
1442	3	–	15.42	–	–	–	–	↓
1445	6	–	26.59	13.98	5.65	0.511	+1000	(DRY) BRN
1455	↓	–	22.00	–	–	–	–	RECHARGE
1505	6	–	17.32	–	–	–	–	↓
1508	9	–	26.63	13.61	5.99	0.308	+1000	(DRY) BRN

Tetra Tech NUS, Inc.

MONITORING WELL DEVELOPMENT RECORD

Well: 16 MWT05
Site: SWMU 16
Date Installed: 4/9/03
Date Developed: 4/15/03
Dev. Method: Surged & Pumped
Pump Type: WHALE

Depth to Bottom (ft.): 41.82
Static Water Level Before (ft.): 30.56
Static Water Level After (ft.): DRY
Screen Length (ft.): 10'
One Well Volume (gal/L): ~1.6 gal
Casing ID (in.): 2 inch PVC

Responsible Personnel: B. BALKOVEC
Drilling Company: Bowser-Morner
Project Name: NSWC CRANE
Project Number: N9060 CTO 0279
PID Readings: Bore Hole 0 ppm
PID Readings: Breathing Zone 0 ppm

Time	Cumulative Water Volume (Gal.)	Flow Rate (mL/min.)	Water Level Readings (Ft. below TOC)	Temperature (Degrees C)	pH	Specific Conductance (Units µS/cm)	Turbidity (NTU)	Remarks (odor, color, etc.)
1245	START	2 gal/min	—	—	—	—	—	SURGED 1230-1245 GRAY
1250	—	—	39.70	15.94	5.03	650	>2000	
1252	37.5 gal	—	DRY	—	—	—	—	
1302	—	—	37.17	—	—	—	—	
1312	—	—	33.83	—	—	—	—	
1313	START	2L/min	—	17.01	4.75	679	>2000	CLOUDY GRAY
1320	—	—	39.60	—	—	—	—	
1330	≈15 gal	2 gal/min	41.65	17.21	4.60	691	>2000	SURGED WELL W/ PUMP
1331	16 gal	—	DRY	—	—	—	—	DARK GRAY
1341	—	—	37.48	—	—	—	—	
1351	—	—	34.15	—	—	—	—	
1352	START	—	—	17.45	4.26	701	>2000	
1357	—	2 gal/min	38.21	—	—	—	—	
1402	21 gal	—	DRY	—	—	—	—	

Tetra Tech NUS, Inc.

MONITORING WELL DEVELOPMENT RECORD

Well: 16MWT06
Site: SWMU 16
Date Installed: 4/24/03
Date Developed: 4/26/03
Dev. Method: Surged & Pumped
Pump Type: Watterra

Depth to Bottom (ft.): 28.28
Static Water Level Before (ft.): 12.90
Static Water Level After (ft.): DRY
Screen Length (ft.): 10'
One Well Volume (gal/L): 2.6 gal
Casing ID (in.): 2 inch PVC

Responsible Personnel: T. ROWAHN
Drilling Company: Bowser-Morner
Project Name: NSWC CRANE
Project Number: N9060 CTO 0279
PID Readings: Bore Hole — ppm
PID Readings: Breathing Zone — ppm

Time	Cumulative Water Volume (Gal.)	Flow Rate (mL/min.)	Water Level Readings (Ft. below TOC)	Temperature (Degrees C)	pH	Specific Conductance (Units ____)	Turbidity (NTU)	Remarks (odor, color, etc.)
1700	0	—	12.90	—	—	—	—	START DEV
1708	10 gal	—	Dry	14.52	7.42	0.260	+1000	DRY GREY
1713	↓	—	26.23	—	—	—	—	RECHARGE
1718	↓	—	25.73	—	—	—	—	↓
1723	10 gal	—	25.50	—	—	—	—	↓
1725	12 gal	—	DRY	14.87	7.88	0.354	+1000	DRY Grey
1735	↓	—	26.76	—	—	—	—	RECHARGE
1745	12 gal	—	26.60	—	—	—	—	↓
1746	13.5 gal	—	DRY	15.18	7.89	0.360	+1000	DRY Grey

APPENDIX C.6.2
SWMU 13 AND SWMU 16
MONITORING WELL DEVELOPMENT RECORDS
ROUND 2

MONITORING WELL DEVELOPMENT RECORD

Well: 13MWT27
Site: SWMU 13
Date Installed: 11-5-03
Date Developed: 11-18-03
Dev. Method: Surge & Purge
Pump Type: Peristaltic

Depth to Bottom (ft.): 22.4
Static Water Level Before (ft.): 10.2
Static Water Level After (ft.):
Screen Length (ft.): 10'
One Well Volume: 7.4'
Casing ID (in.): 2"

Responsible Personnel: T. Rosalial
Drilling Co.: Bowser Morner
Project Name: NSWC Crane
Project Number: 9060
PID Readings: Borehole – ppm
PID Readings: Breathing Zone – ppm

Time	Cumulative Water Volume ~~(Gal.)~~ L	Flow Rate (ml/min.)	Water Level Readings (Ft. below TOC)	Temperature (Degrees C)	pH	Specific Conductance (Units _____)	Turbidity (NTU)	Remarks (odor, color, etc.)
1230	0	–	10.2	–	–	–	–	Start Dev.
1240	7L	700	13.3	–	–	–	>1000	Grayish Brn
1250	14L	700	16.70	–	–	–	>1000	Gray Brn
1300	21L	700	20.50	–	–	–	>1000	Gray
1307	25.9L	700	DRY	–	–	–	>1000	Gray
1317	25.9L	–	21.30	–	–	–	–	Recharge
1327	25.9L	–	20.60	–	–	–	–	" Restart Pump
1333	30.1L	700	DRY	16.51	6.19	0.346	>1000	Lt Gray
1348	30.1L	–	21.20	–	–	–	–	Recharge
1358	30.1L	–	20.68	–	–	–	–	"
1403	33.6L	700	DRY	16.05	5.97	0.313	>1000	Lt. Grey

MONITORING WELL DEVELOPMENT RECORD

Well: 13 MWT 28
Site: SWMU 13
Date Installed: 11-19-03
Date Developed: 11/22/03
Dev. Method: SURGE & PURGE
Pump Type: WATTERRA/BAILER

Depth to Bottom (ft.): 91.70'
Static Water Level Before (ft.): 80.57'
Static Water Level After (ft.): Dry
Screen Length (ft.): 10'
One Well Volume: 1.8 g
Casing ID (in.): 2"

Responsible Personnel: S. GRIER
Drilling Co.: BOWSER-MORNER
Project Name: NSWC CRANE
Project Number: 9060
PID Readings: Borehole 56 ppm
PID Readings: Breathing Zone 0.8 ppm

Time	Cumulative Water Volume (Gal.)	Flow Rate (ml/min.)	Water Level Readings (Ft. below TOC)	Temperature (Degrees C)	pH	Specific Conductance (Units uS/cm)	Turbidity (NTU)	Remarks (odor, color, etc.)
INITIAL	0	0	80.57 (dry)				→	start
1020	3.0	WATTERRA	89.90	18.16	10.72	0.445	999+	GREY - NO ODOR
1030	—	—	89.50	—	—	—	—	ALLOWING RECHARGE
1040	—	—	—	—	—	—	—	SURGED w/ BLOCK
1050	3.25	BAILER	90.05 (dry)	16.34	10.93	0.463	999+	ALLOWING RECHARGE
1100	—	—	89.85	—	—	—	—	
1110	3.25 gal	BAILER	89.75 (dry)	17.13	10.74	0.444	999+	GREY - NO ODOR

MONITORING WELL DEVELOPMENT RECORD

Well: 13MWT29
Site: SWMU 13
Date Installed: 11-4-03
Date Developed: 11-6-03
Dev. Method: PUMP + SURGE
Pump Type: WHALE

Depth to Bottom (ft.): 21.2
Static Water Level Before (ft.): 9.78
Static Water Level After (ft.): Dry
Screen Length (ft.): 10
One Well Volume: 1.9 gal
Casing ID (in.): 2

Responsible Personnel: F. WUDKWYCH
Drilling Co.: BOWSER MORNER
Project Name: NSWC CRANE
Project Number: 9060
PID Readings: Borehole – ppm
PID Readings: Breathing Zone – ppm

Time	Cumulative Water Volume (Gal.)	Flow Rate (ml/min.)	Water Level Readings (Ft. below TOC)	Temperature (Degrees C)	pH	Specific Conductance (Units mS/cm)	Turbidity (NTU)	Remarks (odor, color, etc.)
0827	—	—	9.78	—	—	—	—	SURGE FOR 5 MIN, BEGIN PUMPING
0830	3	1 gpm	DRY	—	—	—	—	THICK - DARK BROWN
0848	RESUME	PUMPING	7.7	—	—	—	—	↓ ROUGHLY 6" OF
0855	8		DRY	—	—	—	—	SEDIMENT ON BOTTOM
0908			9.7	—	—	—	—	
0914	12		DRY	15.68	5.38	0.535	>999	DARK BROWN
0935			8.00	—	—	—	—	
0937	16		DRY	15.14	5.51	0.534	>999	DIRTY BROWN
0955			9.35	—	—	—	—	
1000	22 gal		DRY	15.09	5.28	0.543	>999	BROWN
END								

MONITORING WELL DEVELOPMENT RECORD

Well: 13 MWT 30
Site: SWMU 13
Date Installed: 11/16/03
Date Developed: 11/20/03
Dev. Method: SURGE & PURGE
Pump Type: WHALE

Depth to Bottom (ft.): 26.65'
Static Water Level Before (ft.): 11.90'
Static Water Level After (ft.): DRY
Screen Length (ft.): 10'
One Well Volume: 2.4 gal.
Casing ID (in.): 2"

Responsible Personnel: S. GRIER
Drilling Co.: BOWSER MORNER
Project Name: NSWC CRANE
Project Number: 9060
PID Readings: Borehole — ppm
PID Readings: Breathing Zone — ppm

Time	Cumulative Water Volume (Gal.)	Flow Rate (ml/min.)	Water Level Readings (Ft. below TOC)	Temperature (Degrees C)	pH	Specific Conductance (Units uS/cm)	Turbidity (NTU)	Remarks (odor, color, etc.)
1550	0	1.5gpm	11.90					
1556	5.0g	~~0.25g~~/min.	25.00 (dry)	15.60	4.34	0.542	950	GREY, SLIGHT ORGANIC ODOR
1606	↓	—	21.70	—	—	—	—	ALLOWING RECHARGE
1616		1.5gpm	20.15	—	—	—	—	SURGED W/ BLOCK
1620	6.25	~~0.25g~~/min.	26.50	14.90	4.56	0.537	999+	
1622	↓		25.85 (dry)	—	—	—	—	ALLOWING RECHARGE
1632			23.55	—	—	—	—	
1642	↓		21.91	—	—	—	—	SURGED W/BLOCK
1650	7.5gal	1.5g/min	DRY	14.47	4.36	0.528	999+	

MONITORING WELL DEVELOPMENT RECORD

Well: 13 MWT 31
Site: SWMU 13
Date Installed: 11/5/03
Date Developed: 11/20/03
Dev. Method: SURGE & PURGE
Pump Type: Whole

Depth to Bottom (ft.): 20.90'
Static Water Level Before (ft.): 11.14'
Static Water Level After (ft.): DRY
Screen Length (ft.): 10'
One Well Volume: 1.69
Casing ID (in.): 2"

Responsible Personnel: J. GRIER
Drilling Co.: BOWSER MORNER
Project Name: NSWC CRANE
Project Number: 9060
PID Readings: Borehole – ppm
PID Readings: Breathing Zone – ppm

Time	Cumulative Water Volume (Gal.)	Flow Rate (ml/min.)	Water Level Readings (Ft. below TOC)	Temperature (Degrees C)	pH	Specific Conductance (Units uS/cm)	Turbidity (NTU)	Remarks (odor, color, etc.)
1330	0.25	~~1.5gpm~~	13.10	15.81°C	6.60	0.740	999+	BROWN, NO ODOR
1336	5.25	~~2 GOL/min~~	17.10 (dry)	—	—	—	—	ALLOW RECHARGE
1348	←	—	15.85	—	—	—	—	
1358	→	~~1.5gpm~~	15.45	—	—	—	—	MUCH MUD IS REMOVED
1400	7.50	~~60L/min~~	18.77 (dry)	15.44°C	6.46	0.857	999+	17.10' → 18.77'
1410	—	—	17.28	—	—	—	—	ALLOWING RECHARGE
1420	—	—	16.40	—	—	—	—	
1430	10.00		19.75 (dry)	15.04	6.34	0.675	999+	
								BROUGHT PUMP OUT
1440	—		17.40					TO SURGE W/BLOCK
1450	—		16.58					
1455	11.00		20.07	15.78	6.53	0.535	999+	

MONITORING WELL DEVELOPMENT RECORD

Well: 13MWT32
Site: SWMU 13
Date Installed: 10-29-03
Date Developed: 11-4-03
Dev. Method: Surge & Purge
Pump Type: WHALE

Depth to Bottom (ft.): 20.65
Static Water Level Before (ft.): 10.35
Static Water Level After (ft.): DRY
Screen Length (ft.): 10'
One Well Volume: 1.6 gal
Casing ID (in.): 2"

Responsible Personnel: T. ROJAHN
Drilling Co.: BOWSER MORNER
Project Name: NSWC CRANE
Project Number: N9060
PID Readings: Borehole – ppm
PID Readings: Breathing Zone – ppm

Surge 5 min prior to start of pump

Time	Cumulative Water Volume (Gal.)	Flow Rate (ml/min.)	Water Level Readings (Ft. below TOC)	Temperature (Degrees C)	pH	Specific Conductance (Units ____)	Turbidity (NTU)	Remarks (odor, color, etc.)
1435	0	–	10.35	–	–	–	–	BRN
1438	3.5 gal	–	(DRY)	–	–	–	–	DRY
1448	↓	–	14.41	–	–	–	–	RECHARGE
1458	↓	–	13.25	–	–	–	–	RECHARGE (Restart Pump)
1500	6.5 gal	–	(DRY)	18.76	6.30	0.441	>1000	(DRY) BRN
1510	↓	–	16.00	–	–	–	–	RECHARGE
1520	↓	–	14.50	–	–	–	–	RECHARGE (Restart Pump)
1522	8 gal	–	(DRY)	18.25	5.96	0.455	>1000	(DRY) TANNISH - BRN

MONITORING WELL DEVELOPMENT RECORD

Well: 13MWT33
Site: SWMU 13
Date Installed: 11-6-03
Date Developed: 11/19/03
Dev. Method: Surge & Purge
Pump Type: Peristaltic

Depth to Bottom (ft.): 21.8
Static Water Level Before (ft.): 13.8
Static Water Level After (ft.):
Screen Length (ft.): 10'
One Well Volume: 4.9L
Casing ID (in.): 2"Ø

Responsible Personnel: T. Rojahn
Drilling Co.: Bowser Morner
Project Name: NSWC Crane
Project Number: 9060
PID Readings: Borehole — ppm
PID Readings: Breathing Zone — ppm

Time	Cumulative Water Volume (Gal.)	Flow Rate (ml/min.)	Water Level Readings (Ft. below TOC)	Temperature (Degrees C)	pH	Specific Conductance (Units _____)	Turbidity (NTU)	Remarks (odor, color, etc.)
1542	—	—	13.80	—	—	—	—	—
1552	8.00 L	800	20.40	—	—	—	71000	GRAY BRN
1554	9.60 L	800	(DRY)	—	—	—	—	(DRY)
1604	9.60 L	—	20.48	—	—	—	—	RECHARGE
1614	9.60 L	—	20.09	—	—	—	—	"
1617	12.00 L	800	(DRY)	14.15	6.00	0.202	71000	BRN (DRY)
1627	12.00 L	—	20.95	—	—	—	—	RECHARGE
1632	12.00 L	—	20.73	—	—	—	—	"
1633	12.80 L	800	(DRY)	13.99	5.89	0.247	71000	BRN (DRY

MONITORING WELL DEVELOPMENT RECORD

Well: 13MWT 34
Site: SWMU 13
Date Installed: 11/11/03
Date Developed: 11/18/03
Dev. Method: Surge & Purge
Pump Type: Parastoltic pump

Depth to Bottom (ft.): ~~23.0~~ 22.9
Static Water Level Before (ft.): 5.49
Static Water Level After (ft.): DRY
Screen Length (ft.): 10'
One Well Volume: 2.8 gal / 10.6 L
Casing ID (in.): 2" ⌀

Responsible Personnel: SCOTT GRIER / T. ROJAHN
Drilling Co.: BOWSER MORNER
Project Name: NSWC CRANE
Project Number: 9060
PID Readings: Borehole — ppm
PID Readings: Breathing Zone — ppm

	Time	Cumulative Water Volume ~~(Gal.)~~ L	Flow Rate (ml/min.)	Water Level Readings (Ft. below TOC)	Temperature (Degrees C)	pH	Specific Conductance (Units mS/cm)	Turbidity (NTU)	Remarks (odor, color, etc.)
SG	1500	0	≈ 100	5.49'	16.31	6.01	0.548	999+	Lt. Brown color —
SG	1530	6.00 L	200	6.98	16.23	6.13	0.513	548	No odor
SG	1535	7.00 L	200	7.00	—	—	—	—	
T.R.	1600	7.00 L	750	~~11.85~~ TR	—	—	—	>1000	BRN
T.R.	1620	22.00 L	750	13.15	—	—	—	+1000	BRN
T.R.	1630	30.00 L	800	13.75	16.53	5.94	0.482	+1000	BRN
T.R.	1640	38.00 L	800	17.33	16.60	5.55	0.384	>1000	BRN
T.R.	1650	46.00 L	800	20.20	16.47	5.45	0.414	>1000	BRN
T.R.	1658	52.4 L	800	DRY	—	—	—	—	DEV. Complete
	1708	—	—	19.44	—	—	—	—	RECHARGE

53L = MAX VOL

MONITORING WELL DEVELOPMENT RECORD

Well: 13MWT35
Site: SWMU 13
Date Installed: 11-19-03
Date Developed: 12-7-03
Dev. Method: Bailer (Dis)
Pump Type: "

Depth to Bottom (ft.): 70.2
Static Water Level Before (ft.): 64.16
Static Water Level After (ft.): DRY
Screen Length (ft.): 10
One Well Volume: 4L
Casing ID (in.): 2"Φ

Responsible Personnel: T. Cojahn
Drilling Co.: Bowser Morner
Project Name: NSWC CRANE
Project Number: N 9060
PID Readings: Borehole — ppm
PID Readings: Breathing Zone — ppm

Time	Cumulative Water Volume ~~(Gal.)~~ L	Flow Rate (ml/min.)	Water Level Readings (Ft. below TOC)	Temperature (Degrees C)	pH	Specific Conductance (Units _____)	Turbidity (NTU)	Remarks (odor, color, etc.)
1535	(TD) 4.0	—	64.16	—	—	—	—	Start DEV
1538	4	—	—	13.25	9.67	0.345	>1000	GREY
1545	8	—	—	13.54	9.72	0.355	>1000	"
1550	12	—	—	13.19	9.65	0.382	>1000	"
1555	14.5	—	—	—	—	—	—	DRY
1605	—	—	69.43	—	—	—	—	RECHARGE
1615	—	—	69.33	—	—	—	—	"
1625	—	—	69.26	—	—	—	—	"
			* Slow Recovery Well *					

MONITORING WELL DEVELOPMENT RECORD

Well: 13MWT36
Site: SWMU 13
Date Installed: 11/5/03
Date Developed: 11/10/03
Dev. Method: Surge & Purge
Pump Type: Peristaltic

Depth to Bottom (ft.): ~27.4
Static Water Level Before (ft.): 19.3
Static Water Level After (ft.): 27.10
Screen Length (ft.): 10'
One Well Volume: ~5L
Casing ID (in.): 2"Ø

Responsible Personnel: T. Rojahn
Drilling Co.: Bowser Morner
Project Name: NSWC Crane
Project Number: N9060
PID Readings: Borehole – ppm
PID Readings: Breathing Zone – ppm

Surge 1355 - 1400 Hrs

Time	Cumulative Water Volume (Gal.)	Flow Rate (ml/min.)	Water Level Readings (Ft. below TOC)	Temperature (Degrees C)	pH	Specific Conductance (Units _____)	Turbidity (NTU)	Remarks (odor, color, etc.)
1400	0	–	19.3	–	–	–	–	BRN
1410	7L	0.7L	24.25	15.08	5.82	0.668	>1000	Lt. BRN
1420	14L	0.7L	26.85	14.69	5.67	0.659	>1000	" "
1422	15.4L	0.7L	DRY	–	–	–	–	DRY
1432	15.4L	–	24.20	–	–	–	–	RECHARGE
1442	15.4L	–	22.65	–	–	–	–	RECHARGE Start Pump
1447	18.9L	0.7L	24.48	14.47	5.40	0.629	107	Sl Cloudy
1452	22.4L	0.7L	26.30	14.87	5.52	0.632	533	CLOUDY
1457	25.9L	0.7L	27.10	14.66	5.63	0.621	73.1	V. Sl. Cloudy
1502	29.4	0.7L	27.10	14.64	5.58	0.623	36.1	CLEAR

MONITORING WELL DEVELOPMENT RECORD

Well: 13MWT 37
Site: SWMU13
Date Installed: 10-24-03
Date Developed: 11-4-03
Dev. Method: Surge & Purge
Pump Type: WHALE

Depth to Bottom (ft.): 27.15
Static Water Level Before (ft.): 14.00
Static Water Level After (ft.): DRY
Screen Length (ft.): 10'
One Well Volume: 2.1 gal
Casing ID (in.): 2"

Responsible Personnel: T. ROJAHN
Drilling Co.: BOWSER MORNER
Project Name: NSWC CRANE
Project Number: N9060
PID Readings: Borehole – ppm
PID Readings: Breathing Zone – ppm

Surge 5 min prior to pumping

Time	Cumulative Water Volume (Gal.)	Flow Rate (ml/min.)	Water Level Readings (Ft. below TOC)	Temperature (Degrees C)	pH	Specific Conductance (Units _____)	Turbidity (NTU)	Remarks (odor, color, etc.)
1329	0	–	14.0	–	–	–	–	BRN
1333	4gal	–	(DRY)	–	–	–	–	(DRY)
1343	↓	–	19.05	–	–	–	–	RECHARGE
1353	↓	–	16.78	–	–	–	–	" start pump
1355	7gal	–	(DRY)	17.40	5.83	0.437	939	(DRY) cloudy-TANNISH
1405	↓	–	20.30	–	–	–	–	RECHARGE
1415	↓	–	17.78	–	–	–	–	RECHARGE & start pump
1417	10gal	–	(DRY)	15.70	5.06	0.397	549	(DRY.) cloudy

MONITORING WELL DEVELOPMENT RECORD

Well: 13MWT38
Site: SWMU13
Date Installed: 11-4-03
Date Developed: 11-6-03/11-7
Dev. Method: SURGE, PUMP + BAILER
Pump Type: WATTERA

Depth to Bottom (ft.): 67.6
Static Water Level Before (ft.): 67.14
Static Water Level After (ft.): DRY
Screen Length (ft.): 10
One Well Volume: 1 gal
Casing ID (in.): 2

Responsible Personnel: F. WUDKWYCH
Drilling Co.: BOWSER MORNER
Project Name: NSWC CRANE
Project Number: 9060
PID Readings: Borehole — ppm
PID Readings: Breathing Zone — ppm

	Time	Cumulative Water Volume (Gal.)	Flow Rate (ml/min.)	Water Level Readings (Ft. below TOC)	Temperature (Degrees C)	pH	Specific Conductance (Units mS/cm)	Turbidity (NTU)	Remarks (odor, color, etc.)
11/6	1300								SURGE FOR 5 MIN
	1400	1							WATTERA - NOT WORKING
	1500	— SWITCH TO		BAILER					WELL NOT PRODUCING
	1650	3		67.13 - DRY					ENOUGH WATER
11/7	0810	↓		62.21					
	0825	4 1/2		BAIL DRY					GREY
	1537	↓		62.95					
	1550	6		DRY					

MONITORING WELL DEVELOPMENT RECORD

Well: 13MWT39
Site: SWMU13
Date Installed: 11-4-03
Date Developed: 11-6-03
Dev. Method: PUMP + SURGE
Pump Type: WHALE/TYPHOON

Depth to Bottom (ft.): 26.7
Static Water Level Before (ft.): 16.78
Static Water Level After (ft.): Dry
Screen Length (ft.): 10
One Well Volume: 1.6 gal
Casing ID (in.): 2

Responsible Personnel: F. WUDKWYCH
Drilling Co.: BOWSER MORNER
Project Name: NSWC CRANE
Project Number: 9060
PID Readings: Borehole – ppm
PID Readings: Breathing Zone – ppm

Time	Cumulative Water Volume (Gal.)	Flow Rate (ml/min.)	Water Level Readings (Ft. below TOC)	Temperature (Degrees C)	pH	Specific Conductance (Units mS/cm)	Turbidity (NTU)	Remarks (odor, color, etc.)
1043	0							SURGE FOR 5 MIN BEGIN PUMPING
1048	3		DRY					GREYISH BROWN, V. THICK
1110	↓		22.2					
1114	5½		DRY	13.34	6.47	0.356	7999	GREY
1137	↓		22.75				~~705~~ (FV)	GREY
1140	6½		DRY	12.21	6.84	0.361	705	
END								

MONITORING WELL DEVELOPMENT RECORD

Well: 13MWT40
Site: SWMU 13
Date Installed: 10-23-03
Date Developed: 11-04-03
Dev. Method: Surge & Purge
Pump Type: Whale

Depth to Bottom (ft.): 27.7'
Static Water Level Before (ft.): 18.19
Static Water Level After (ft.): DRY
Screen Length (ft.): 10
One Well Volume: 6.2 L
Casing ID (in.): 2

Responsible Personnel: T. Rojahn
Drilling Co.: Bowser Morner
Project Name: NSWC Crane
Project Number: N9060
PID Readings: Borehole — ppm
PID Readings: Breathing Zone — ppm

Surge 5 min prior to DEV.

Time	Cumulative Water Volume (Gal.)	Flow Rate (ml/min.)	Water Level Readings (Ft. below TOC)	Temperature (Degrees C)	pH	Specific Conductance (Units _____)	Turbidity (NTU)	Remarks (odor, color, etc.)
1053	0	4L/MIN	18.19	—	—	—	—	BKN
1059	5gal	~~5gal~~ TC	in L below pump T.O	—	—	—	—	(DRY)
1109	↓	—	20.64	—	—	—	—	RECHARGE
1119	↓	—	19.03	—	—	—	—	" Restart Pump
1120	~~5~~ TC	—	—	15.87	5.79	0.287	71000	Tannish - Cloudy
1122	8gal	—	(DRY)	—	—	—	—	(DRY)
1132	↓	—	20.38	—	—	—	—	RECHARGE
1142	↓	—	19.12	—	—	—	—	" Restart Pump
1145	11.5gal	—	(DRY)	14.94	5.67	0.286	658	Sl Cloudy - Cloudy

MONITORING WELL DEVELOPMENT RECORD

Well: 13 MWT41
Site: SWMU 13
Date Installed: 11-10-03
Date Developed: 11-18-03
Dev. Method: BAILER
Pump Type: —

Depth to Bottom (ft.): 67.8 TOC
Static Water Level Before (ft.): 65.80 TOC
Static Water Level After (ft.): ~67
Screen Length (ft.): 10'
One Well Volume: 0.3 gal
Casing ID (in.): 2"

Responsible Personnel: M. G. COCHRAN
Drilling Co.: BOWSER-MORNER
Project Name: NSWC CRANE
Project Number: 9060
PID Readings: Borehole — ppm
PID Readings: Breathing Zone — ppm

Time	Cumulative Water Volume (Gal.)	Flow Rate (ml/min.)	Water Level Readings (Ft. below TOC)	Temperature (Degrees C)	pH	Specific Conductance (Units ____)	Turbidity (NTU)	Remarks (odor, color, etc.)
1500	1 GALLON	—	65.80	—	—	—	—	CLOUDY, PURGED DRY,
								4 BALERS.

MONITORING WELL DEVELOPMENT RECORD

Well: 13MWT42
Site: SWMU 13
Date Installed: 10/22/03
Date Developed: 11/04/03
Dev. Method: Surge & Purge
Pump Type: WHALE

Depth to Bottom (ft.): 23.45
Static Water Level Before (ft.): 20.6
Static Water Level After (ft.): DRY
Screen Length (ft.): 10'
One Well Volume: 1.9 L
Casing ID (in.): 2"

Responsible Personnel: T. ROJAHN
Drilling Co.: BOWSER MORNER
Project Name: NSWC CLAND
Project Number: N9060
PID Readings: Borehole — ppm
PID Readings: Breathing Zone — ppm

SURGED 5 min PRIOR to PUMPING

Time	Cumulative Water Volume (Gal.)	Flow Rate (ml/min.)	Water Level Readings (Ft. below TOC)	Temperature (Degrees C)	pH	Specific Conductance (Units mS/cm)	Turbidity (NTU)	Remarks (odor, color, etc.)
0939	0	—	20.6	—	—	—	—	DARK GREY
0940	1L	1L/min	(DRY)	—	—	—	—	
0942	1L	—	21.15	—	—	—	—	RECHARGE
0950	1L	—	20.00	—	—	—	—	"
1000	1L	—	20.90	—	—	—	—	" Restart Pump
1001	2L	1L/min	(DRY) ~~22.10~~	16.12	6.75	0.257	>1000	DARK GREY
1002	2L	—	22.10	—	—	—	—	RECHARGE
1010	2L	—	21.79	—	—	—	—	"
1020	2L	—	21.55	—	—	—	—	" Restart Pump
1021	3L	1L/min	DRY	15.78	6.48	0.250	>1000	DARK GREY

MONITORING WELL DEVELOPMENT RECORD

Well: 13MWT43
Site: SWMU 13
Date Installed: 11-6-03
Date Developed: 11-23-03
Dev. Method: Surge & Purge
Pump Type: Peristaltic

Depth to Bottom (ft.): 22.50
Static Water Level Before (ft.): 9.40
Static Water Level After (ft.):
Screen Length (ft.): 10'
One Well Volume: 2.1 gal / 8L
Casing ID (in.): 2"Ø

Responsible Personnel: T. Rosand
Drilling Co.: Bowser Morner
Project Name: N SWC Crane
Project Number: 9060
PID Readings: Borehole - ppm
PID Readings: Breathing Zone - ppm

Time	Cumulative Water Volume (Gal.)	Flow Rate (ml/min.)	Water Level Readings (Ft. below TOC)	Temperature (Degrees C)	pH	Specific Conductance (Units _____)	Turbidity (NTU)	Remarks (odor, color, etc.)
1230	0	-	9.40	-	-	-	-	Start DEV.
1240	6L	600	15.65	16.16	5.68	0.351	>1000	Grey
1250	12L	600	19.30	15.67	5.12	0.355	114	Sl. Cloudy
1259	17.4L	600	(DRY)	-	-	-	-	DRY
1309	17.4L	600	21.54	-	-	-	-	RECHARGE
1319	17.4L	600	20.82	-	-	-	-	" Restart Pump
1323	19.8L	600	(DRY)	15.35	5.20	0.361	870	V. Cloudy
1333	19.8L	-	21.61	-	-	-	-	RECHARGE
1343	19.8L	-	21.02	-	-	-	-	"
1347	21.6L	600	DRY	15.34	5.03	0.340	>1000	Grey

MONITORING WELL DEVELOPMENT RECORD

Well: 13MWT44
Site: SWMU 13
Date Installed: 11-10-03
Date Developed: 11-23-03
Dev. Method: WATTERRIA
Pump Type: WATTERRIA

Depth to Bottom (ft.): 85.81
Static Water Level Before (ft.): 64.46
Static Water Level After (ft.): DRY
Screen Length (ft.): 10'
One Well Volume: 3.5 gal
Casing ID (in.): 2" Ø

Responsible Personnel: T. RUJAHN
Drilling Co.: BOWSER MORNER
Project Name: NSWC CRANE
Project Number: N9060
PID Readings: Borehole 3.1 ppm
PID Readings: Breathing Zone 0.0 ppm

Time	Cumulative Water Volume (Gal.)	Flow Rate (ml/min.)	Water Level Readings (Ft. below TOC)	Temperature (Degrees C)	pH	Specific Conductance (Units _____)	Turbidity (NTU)	Remarks (odor, color, etc.)
1100	0	–	64.46	–	–	–	–	DARK GREY
1107	4	–	81.70	15.60	7.99	0.543	>1000	" "
1129	4	–	78.90	–	–	–	–	RECHARGE
1134	6	–	84.50	15.73	8.14	0.538	>1000	DARK GREY
1144	6	–	81.50	–	–	–	–	RECHARGE
1149	6	–	80.70	–	–	–	–	"
1153	8	–	DRY	15.25	8.11	0.564	>100	DARK GREY
	+ 2 gal. in Tubing							
	10 Total							

MONITORING WELL DEVELOPMENT RECORD

Well: 13 MWT 45
Site: SWMU 13
Date Installed: 11/10/03
Date Developed: 11/20/03
Dev. Method: WATTERRA
Pump Type: "

Depth to Bottom (ft.): 83.00
Static Water Level Before (ft.): 41.65
Static Water Level After (ft.): Dry
Screen Length (ft.): 10'
One Well Volume: 6.759
Casing ID (in.): 2"

Responsible Personnel: S. GRIER
Drilling Co.: BOWSER MORNER
Project Name: NWSC CRANE
Project Number: 9060
PID Readings: Borehole – ppm
PID Readings: Breathing Zone – ppm

Time	Cumulative Water Volume (Gal.)	Flow Rate (ml/min.)	Water Level Readings (Ft. below TOC)	Temperature (Degrees C)	pH	Specific Conductance (Units uS/cm)	Turbidity (NTU)	Remarks (odor, color, etc.)
1020	0	–	41.65	–	–	–	–	
1030	6.75	–	dry	15.06	9.22	0.161	999+	GREY BROWN – NO ODOR
1040	↓	–	81.65	–	–	–	–	ALLOW RECHARGE
1050	↓	–	80.43					
1105	7.00	–	81.09	20.80	9.42	0.208	999+	GREY BROWN NO ODOR
1115	↓		81.02					ALLOW RECHARGE FROM 18.09'
1125	7.25		79.95	14.97	9.50	0.201	999+	GREY BROWN NO ODOR
1145	7.25		dry	–	–	–		
1155			81.62	–	–	–	–	ALLOW RECHARGE
1205			81.55	–	–	–	–	

MONITORING WELL DEVELOPMENT RECORD

Well: 13MWT46
Site: SWMU 13
Date Installed: 11/22/03
Date Developed: 12/4/03
Dev. Method: Surge & Purge
Pump Type: Dis. Bailer

Depth to Bottom (ft.): 67.6
Static Water Level Before (ft.): 58.3
Static Water Level After (ft.): 60.12
Screen Length (ft.): 10'
One Well Volume: 6 L
Casing ID (in.): 2"Ø

Responsible Personnel: T. Rojahn
Drilling Co.: Bowser Morner
Project Name: NSWC Crane
Project Number: N9060
PID Readings: Borehole — ppm
PID Readings: Breathing Zone — ppm

Time	Cumulative Water Volume (Gal.) L	Flow Rate (ml/min.)	Water Level Readings (Ft. below TOC)	Temperature (Degrees C)	pH	Specific Conductance (Units ____)	Turbidity (NTU)	Remarks (odor, color, etc.)
1533	—	—	—	—	—	—	—	
1541	6	1 VOL	—	1130	6.24	0.753	>1000	Grey Brn
1549	12	2	—	1131	6.51	0.790	>1000	" "
1556	18	3	—	1134	6.62	0.799	>1000	" "
1604	24	4	—	1137	6.71	0.808	>1000	" "
1610	30	5	—	1155	6.58	0.821	>1000	" "
1618	36	6	—	1170	6.46	0.833	>1000	" "
1624	42	7	—	1155	6.62	0.830	>1000	" "
1631	48	8	—	1142	6.74	0.826	>1000	" "
1638	54	9	—	—	—	—	>1000	" "
1644	60	10	—	—	—	—	>1000	" "
1650	66	11	—	1112	6.89	0.824	>1000	" "
1655	72	12	—	—	—	—	>1000	" "
1702	78	13	—	—	—	—	>1000	" "
1707	84	14	60.12	1120	6.84	0.830	>1000	" "

MONITORING WELL DEVELOPMENT RECORD

Well: 13MW T47
Site: SWMU 13
Date Installed: ~~11/4/03~~ 11/20/03
Date Developed: 11/24/03
Dev. Method: Surge & Pump
Pump Type: Peristaltic

Depth to Bottom (ft.): 20.2
Static Water Level Before (ft.): 6.3
Static Water Level After (ft.): 0
Screen Length (ft.): 10'
One Well Volume: 8.7 L
Casing ID (in.): 2"

Responsible Personnel: T. Rojahn
Drilling Co.: Bowser Morner
Project Name: NSWC Crane
Project Number: 9060
PID Readings: Borehole – ppm
PID Readings: Breathing Zone – ppm

Time	Cumulative Water Volume ~~(Gal.)~~ L	Flow Rate (ml/min.)	Water Level Readings (Ft. below TOC)	Temperature (Degrees C)	pH	Specific Conductance (Units _____)	Turbidity (NTU)	Remarks (odor, color, etc.)
1335	0	800	6.30	—	—	—	—	BRN
1345	8 L	800	9.77	11.51	4.02	0.832	449	V. Lt. BRN
1355	16 L	800	11.10	13.19	3.63	0.900	>1000	Lt. BRN
1405	24 L	800	13.35	12.92	3.54	0.908	405	V. Lt. BRN
1415	32 L	800	15.50	12.91	3.65	0.906	>1000	Lt BRN
1425	40 L	800	17.90	12.65	3.56	0.874	>1000	Lt. BRN
1435	48 L	800	DRY	—	—	—	—	—
1445	—	—	16.10	—	—	—	—	RECHARGE

OVER 5 WELL VOL PURGED

MONITORING WELL DEVELOPMENT RECORD

Well: 16MWT07
Site: SWMU 16
Date Installed: 11/11/03
Date Developed: –
Dev. Method: –
Pump Type: –

Depth to Bottom (ft.): 27.83
Static Water Level Before (ft.): DRY
Static Water Level After (ft.): DRY
Screen Length (ft.): 10'
One Well Volume: 0
Casing ID (in.): 2"

Responsible Personnel: TERRY ROHAHN
Drilling Co.: BOWSER MORNER
Project Name: NSWC CRANE
Project Number: N9060
PID Readings: Borehole – ppm
PID Readings: Breathing Zone – ppm

Time	Cumulative Water Volume (Gal.)	Flow Rate (ml/min.)	Water Level Readings (Ft. below TOC)	Temperature (Degrees C)	pH	Specific Conductance (Units _____)	Turbidity (NTU)	Remarks (odor, color, etc.)
			DRY WELL!					

MONITORING WELL DEVELOPMENT RECORD

Well: 16MWT08
Site: SWMU 16
Date Installed: 11-9-03
Date Developed: 11-21-03
Dev. Method: WATTERRIA
Pump Type: "

Depth to Bottom (ft.): 97.60
Static Water Level Before (ft.): 20.35
Static Water Level After (ft.): DRY
Screen Length (ft.): 10
One Well Volume: 12.5 gal
Casing ID (in.): 2" Ø

Responsible Personnel: T. ROSAHN / M. COCHRAN
Drilling Co.: BOWSER MORNER
Project Name: NSWC CRANE
Project Number: 9060
PID Readings: Borehole — ppm
PID Readings: Breathing Zone — ppm

Time	Cumulative Water Volume (Gal.)	Flow Rate (ml/min.)	Water Level Readings (Ft. below TOC)	Temperature (Degrees C)	pH	Specific Conductance (Units ____)	Turbidity (NTU)	Remarks (odor, color, etc.)
1316	—	—	20.35	—	—	—	—	—
1326	10 gal	—	DRY	15.62	7.80	0.192	>1000	GREY
1338	15 gal	—	DRY	←			→	END DEV. ~3 gal in tubing

MONITORING WELL DEVELOPMENT RECORD

Well: 16MWT09
Site: SWMU 16
Date Installed: 11/8/03
Date Developed: 11/9/03
Dev. Method: SURGE & PURGE
Pump Type: WHALE

Depth to Bottom (ft.): 27.60
Static Water Level Before (ft.): 15.73
Static Water Level After (ft.): DRY
Screen Length (ft.): 10'
One Well Volume: ~2 gal
Casing ID (in.): 2"

Responsible Personnel: T. ROJAHN
Drilling Co.: BOYSEN MARNER
Project Name: NSWC CRANE
Project Number: N9060
PID Readings: Borehole — ppm
PID Readings: Breathing Zone — ppm

1535 - 1540 SURGE

Time	Cumulative Water Volume (Gal.)	Flow Rate (ml/min.)	Water Level Readings (Ft. below TOC)	Temperature (Degrees C)	pH	Specific Conductance (Units _____)	Turbidity (NTU)	Remarks (odor, color, etc.)
1540	0	—	15.73	—	—	—	—	GRAY
1552	9	0.75 gal	(DRY)	—	—	—	—	GRAYISH BRN
1602	9	—	24.00	—	—	—	—	RECHARGE
1612	9	—	22.65	—	—	—	—	" Restart Pump
1615	12	—	—	14.91	4.92	0.321	>1000	BRN
1617	14	—	(DRY)	—	—	—	—	DRY
1627	14	—	24.20	—	—	—	—	RECHARGE
1637	14	—	23.90	—	—	—	—	" (Restart Pump
1645	14	—	22.40	—	—	—	—	"
1648	17	—	DRY	14.98	4.91	0.272	>1000	DRY

16 MWT10

MONITORING WELL DEVELOPMENT RECORD

Well: ~~16MWT09~~ (FW)
Site: SWMU 16
Date Installed: 11-9-03
Date Developed: 11-11-03
Dev. Method: PUMP + SURGE
Pump Type: PERISTALTIC

Depth to Bottom (ft.): 26.82
Static Water Level Before (ft.): 23.68
Static Water Level After (ft.):
Screen Length (ft.): 10
One Well Volume: 0.5 gal
Casing ID (in.): 2

Responsible Personnel: E WUDKWYCH
Drilling Co.: BOWSER MORNER
Project Name: NSWC CRANE
Project Number: N9060
PID Readings: Borehole — ppm
PID Readings: Breathing Zone — ppm

Time	Cumulative Water Volume (Gal.)	Flow Rate (ml/min.)	Water Level Readings (Ft. below TOC)	Temperature (Degrees C)	pH	Specific Conductance (Units ms/cm)	Turbidity (NTU)	Remarks (odor, color, etc.)
1420	0	23.68 →		—	—	—	—	SURGE FOR 5 MIN.
1425	↓			—	—	—	—	PUMPING, DARK GREY
1605	8	25.15 →		—	—	—	—	CLOUDY
1615	9	—	—	14.86	3.84	1.203	1010	
1630	10	—	—	14.79	3.78	1.138	908	
1650	12 gal							END

MONITORING WELL DEVELOPMENT RECORD

Well: IGMWT 11
Site: SWMU 16
Date Installed: 11-11-03
Date Developed: 11-21-03
Dev. Method: Surge & Purge
Pump Type: Bailer

Depth to Bottom (ft.): 98.65
Static Water Level Before (ft.): 83.05
Static Water Level After (ft.): 97.5
Screen Length (ft.): 10'
One Well Volume: 10L
Casing ID (in.): 2"

Responsible Personnel: T. Rojahn
Drilling Co.: Bowser Morner
Project Name: NSWC Crane
Project Number: 9060
PID Readings: Borehole - ppm
PID Readings: Breathing Zone - ppm

Time	Cumulative Water Volume ~~(Gal.)~~ L	Flow Rate (ml/min.)	Water Level Readings (Ft. below TOC)	Temperature (Degrees C)	pH	Specific Conductance (Units _____)	Turbidity (NTU)	Remarks (odor, color, etc.)
0845	-	-	83.05	-	-	-	-	Start Dev.
0857	10 L	-	-	13.48	7.72	0.156	>1000	Grey
0909	20 L	-	-	13.22	8.30	0.193	>1000	"
0927	28 L	-	DRY	-	-	-	-	DRY
0947	-	-	97.5	-	-	-	-	END DEVELOPMENT
								RECHARGE SLOW

MONITORING WELL DEVELOPMENT RECORD

Well: 16 MWT12
Site: SWMU 16
Date Installed: 11/7/03
Date Developed: 11/9/03
Dev. Method: SURGE & PURGE
Pump Type: ~~WHALE~~ PERISTALTIC

Depth to Bottom (ft.): ~28.5
Static Water Level Before (ft.): 22.93
Static Water Level After (ft.): 28.45
Screen Length (ft.): 10'
One Well Volume: ~1gal
Casing ID (in.): 2"

Responsible Personnel: T. ROJAHN
Drilling Co.: BOWSER MORNER
Project Name: NSWC CRANE
Project Number: N 9060
PID Readings: Borehole — ppm
PID Readings: Breathing Zone — ppm

SURGE 1345-1350 HRS

Time	Cumulative Water Volume ~~(Gal.)~~ L	Flow Rate (ml/min.)	Water Level Readings (Ft. below TOC)	Temperature (Degrees C)	pH	Specific Conductance (Units _____)	Turbidity (NTU)	Remarks (odor, color, etc.)
1355	—	650ml	22.93	—	—	—	>1000	DARK BRN → BLACK
1400	3,250	"	24.15	—	—	—	>1000	DARK BRN - Grey
1405	6,500	"	24.75	13.32	5.66	704	>1000	DARK BRN - Grey
1415	13,000	"	26.00	13.72	5.01	648	>1000	DARK BRN - Grey
1430	16,250	"	27.20	13.43	4.53	603	315	Greyish
1435	19,500	"	27.40	13.30	4.35	589	91.2	Lt Greyish
1440	22,750	"	27.65	13.55	4.22	585	333	Greyish
1455	32,500	"	28.40	13.63	4.16	565	>1000	Grey
1500	35,750	"	28.45	13.86	4.02	569	29.1	CLEAR END DEV.
1505	—	—	27.55	—	—	—	—	RECHARGE (V. Good)

6 volumes = 22.7L

MONITORING WELL DEVELOPMENT RECORD

Well: 16MWT13
Site: SWMU 16
Date Installed: 11-11-03
Date Developed: 11-21-03
Dev. Method: SURGE & PURGE
Pump Type: SURGEBLOCK / PUMP PERISTALTIC

Depth to Bottom (ft.): 20.1
Static Water Level Before (ft.): 10.22
Static Water Level After (ft.): DRY
Screen Length (ft.): 10'
One Well Volume: 6L
Casing ID (in.): 2" Ø

Responsible Personnel: M. COCHRAN
Drilling Co.: BOWSER MORNER
Project Name: NSWC CRANE
Project Number: 9060
PID Readings: Borehole — ppm
PID Readings: Breathing Zone — ppm

Time	Cumulative Water Volume ~~(Gal.)~~ L	Flow Rate (ml/min.)	Water Level Readings (Ft. below TOC)	Temperature (Degrees C)	pH	Specific Conductance (Units _____)	Turbidity (NTU)	Remarks (odor, color, etc.)
1520	—	—	10.22	—	—	—	—	Start PURGE
1530	8L	800	12.20	16.53	6.05	0.418	>1000	BRN
1550	24	800	16.57	15.76	5.68	0.399	>1000	BRN
1600	32	800	18.35	15.78	5.51	0.466	>1000	BRN
1610	40	800	DRY	—	—	—	—	PURGED DRY, PUMP OFF
1630	40	800	1655	15.66	5.61	.476	—	PUMP ON
1635								PURGED DRY
1655	41	800	19.65	15.47	5.63	.449	—	PUMP ON
1700								PURGED DRY

MONITORING WELL DEVELOPMENT RECORD

Well: 16MWT14
Site: SWMU 16
Date Installed: 11-7-03
Date Developed: NA
Dev. Method: ~~PUMP + SURGE~~ FLOW
Pump Type: NA

Depth to Bottom (ft.): 24.30
Static Water Level Before (ft.): DRY
Static Water Level After (ft.): NA
Screen Length (ft.): 10
One Well Volume: NA
Casing ID (in.): 2

Responsible Personnel: F. WUDKWYCH
Drilling Co.: BOWSER MORNER
Project Name: N9060 CRANE
Project Number: N9060
PID Readings: Borehole — ppm
PID Readings: Breathing Zone — ppm

Time	Cumulative Water Volume (Gal.)	Flow Rate (ml/min.)	Water Level Readings (Ft. below TOC)	Temperature (Degrees C)	pH	Specific Conductance (Units ms/cm)	Turbidity (NTU)	Remarks (odor, color, etc.)
0900	—	—	DRY on 11-7-03	—	—	—	—	DRY WELL
11/21/03 → this well was ABANDONED								

MONITORING WELL DEVELOPMENT RECORD

Well: 16MWT15
Site: SWMU 16
Date Installed: 11-9-03
Date Developed: 11-21-03
Dev. Method: Surge & Purge
Pump Type: CHECK VALVE WATTERIA

Depth to Bottom (ft.): 97.0
Static Water Level Before (ft.): 53.70
Static Water Level After (ft.): DRY
Screen Length (ft.): 10'
One Well Volume: 7gal
Casing ID (in.): 2" ⌀

Responsible Personnel: M. COCHRAN / SG / TR
Drilling Co.: BOWSER & MORNER
Project Name: NSWC CRANE
Project Number: 9060
PID Readings: Borehole – ppm
PID Readings: Breathing Zone – ppm

Time	Cumulative Water Volume (Gal.)	Flow Rate (ml/min.)	Water Level Readings (Ft. below TOC)	Temperature (Degrees C)	pH	Specific Conductance (Units ____)	Turbidity (NTU)	Remarks (odor, color, etc.)
1610	–	–	–	–	–	–	–	
1630	6.0gal	–	–	–	–	–	–	PURGED DRY. (Grey)
		–						DRYED
1700	6.30g	–	91.62	–	–	–	–	ALLOWING RECHARGE
1710	6.30g	–	90.50	–	–	–	–	" "
1720	8.0g	–	DRY	13.83	7.60	.299	–	Water in Tubing

MONITORING WELL DEVELOPMENT RECORD

Well: 16MWT16
Site: SWMU 16
Date Installed: 11/9/03
Date Developed: 11/11/03
Dev. Method: Surge & Purge
Pump Type: WHALE

Depth to Bottom (ft.): 35.5
Static Water Level Before (ft.): 33.1
Static Water Level After (ft.): DRY
Screen Length (ft.): 10'
One Well Volume: ~2 L
Casing ID (in.): 2" Ø

Responsible Personnel: T. ROJAHN
Drilling Co.: BOWSER MORNER
Project Name: NSWC CRANE
Project Number: 9060
PID Readings: Borehole – ppm
PID Readings: Breathing Zone – ppm

Time	Cumulative Water Volume (Gal.)	Flow Rate (ml/min.)	Water Level Readings (Ft. below TOC)	Temperature (Degrees C)	pH	Specific Conductance (Units _____)	Turbidity (NTU)	Remarks (odor, color, etc.)
1435	0	–	35.5	–	–	–	>1000	DRY < 1 min (BRN) (DRY)
1445	~3 L	~3 L	34.7	–	–	–	–	RECHARGE
1455	~3 L	–	34.35	–	–	–	–	"
1456	~4 L	attempt to pump ... NEED S.S. Bailer					>1000	Removed ~1 L (DRY)
1510	~4 L	–	34.60	–	–	–	–	RECHARGE
1515	~4.5 L	–	DRY	–	–	–	>1000	"
1545	–	–	DRY	–	–	–	–	DRY

MONITORING WELL DEVELOPMENT RECORD

Well: 16MWT17
Site: SWMU 16
Date Installed: 11-8-03
Date Developed: 11-22-03
Dev. Method: Surge & Pump
Pump Type: Peristaltic

Depth to Bottom (ft.): 26.0'
Static Water Level Before (ft.): 15.41
Static Water Level After (ft.): 17.85
Screen Length (ft.): 10'
One Well Volume: 7 L
Casing ID (in.): 2"Ø

Responsible Personnel: T. Rojahn
Drilling Co.: Bowser Morner
Project Name: NSWC Crane
Project Number: 9060
PID Readings: Borehole — ppm
PID Readings: Breathing Zone — ppm

Time	Cumulative Water Volume (Gal.)	Flow Rate (ml/min.)	Water Level Readings (Ft. below TOC)	Temperature (Degrees C)	pH	Specific Conductance (Units ____)	Turbidity (NTU)	Remarks (odor, color, etc.)
1100	0	600	15.41	—	—	—	—	Start Dev BRN
1110	6L	600	16.30	17.06	5.69	0.725	921	BRN
1120	12L	600	16.93	16.98	5.83	0.650	390	BRNNISH
1130	18L	600	17.18	17.06	5.75	0.668	155	Sl. Cloudy
1140	24L	600	17.45	17.08	5.55	0.646	>1000	BRN
1150	30L	600	17.53	17.15	5.47	0.644	>1000	BRN
1200	36L	600	17.70	17.23	5.43	0.627	>1000	BRN
1210	42L	600	17.75	17.19	5.29	0.624	>1000	BRN
1220	48L	600	17.83	17.23	5.15	0.609	737	Cloudy → BRN
1230	54L	600	17.85	17.14	5.10	0.602	175	Sl. Cloudy

MONITORING WELL DEVELOPMENT RECORD

Well: 16MWT18
Site: SWMU 16 CRANE NSWC
Date Installed: 1-18-04
Date Developed: 1-19-04
Dev. Method: WATERA + BAILER
Pump Type: NA

Depth to Bottom (ft.): 104.5
Static Water Level Before (ft.): 9.5
Static Water Level After (ft.): 104.1
Screen Length (ft.): 10'
One Well Volume: 15.5
Casing ID (in.): 2"

Responsible Personnel: FRED W RAMSAER
Drilling Co.: BOWSER MORNER
Project Name: CRANE NSWC
Project Number: 9060
PID Readings: Borehole 0 ppm
PID Readings: Breathing Zone 0 ppm

Time	Cumulative Water Volume (Gal.)	Flow Rate (ml/min.)	Water Level Readings (Ft. below TOC)	Temperature (Degrees C)	pH	Specific Conductance (Units _____)	Turbidity (NTU)	Remarks (odor, color, etc.)
	22 GAL	–	–	–	–	–	–	WATERA (EXTRACTING 18GALS)
								THEN USED BAILER
								TO SURGE AND WITH-
								DRAW WATER TILL WELL
								WAS DRY. WATER
								REMAINED HIGHLY
								TURBID GREY, BLK
								SPECS OF COAL?
								DISSIPATED WHEN
								~~WHAT~~ WATER LEVEL
								REACHED 97' BGS,
								NO PARAMETERS
								MEASURED DUE TO
								HIGH TURBIDITY.

APPENDIX C.7.1
SWMU 13 AND SWMU 16
WATER LEVEL MEASUREMENT SHEETS
ROUND 1

Tetra Tech NUS, Inc.

GROUNDWATER LEVEL MEASUREMENT SHEET

Project Name: CRANE
Project No.: N9060
Location: CRANE, IN
Personnel: B. Balkovec / T. Rojahn
Weather Conditions: Hot and Sunny Low 90's
Measuring Device: M-Scope
Tidally Influenced: Yes ___ No _x_
Remarks: SWMU 13

Well or Piezometer Number	Date	Time	Elevation of Reference Point (feet)*	Total Well Depth From TOC (feet)*	Water Level Indicator Reading (feet)*	Groundwater Elevation (feet)*	Comments
13MWT01	5/5/2003	1730	715.34		6.21	709.13	
13MWT02	5/5/2003	1732	704.72		17.15	687.57	
13MWT03	5/5/2003	1728	721.10		8.79	712.31	
13MWT04	5/5/2003	1737	706.84		12.98	693.86	
13MWT05	5/5/2003	1733	696.44		5.42	691.02	
13MWT06	5/5/2003	1720	717.93		15.11	702.82	
13MWT07	5/5/2003	1741	687.22		3.12	684.10	
13MWT08	5/5/2003	1738	700.56		3.17	697.39	
13MWT09	5/5/2003	1650	705.90		7.74	698.16	
13MWT10	5/5/2003	1636	700.15		13.65	686.50	
13MWT11	5/5/2003	1638	682.29		7.87	674.42	
13MWT12	5/5/2003	1639	682.12		7.88	674.24	
13MWT13	5/5/2003	1610	701.98		3.62	698.36	
13MWT14	5/5/2003	1612	705.5		13.25	692.25	
13MWT15	5/5/2003	1631	696.65		12.88	683.77	
13MWT16	5/5/2003	1629	684.35		8.49	675.86	
13MWT17	5/5/2003	1628	693.01		8.70	684.31	
13MWT18	5/5/2003	1633	702.92		19.06	683.86	
13MWT19	5/5/2003	1615	705.82		8.31	697.51	
13MWT20	5/5/2003	1646	702.07		4.22	697.85	
13MWT21	5/5/2003	1626	690.74		7.69	683.05	
13MWT22	5/5/2003	1624	671.96		7.44	664.52	
13MWT23	5/5/2003	1645	699.14		7.45	691.69	
13MWT24	5/5/2003	1642	693.93		8.45	685.48	
13MWT25	5/5/2003	1622	681.57		16.00	665.57	
13MWT26	5/5/2003	1619	687.49		9.10	678.39	

* All measurements to the nearest 0.01 foot

Tetra Tech NUS, Inc.

GROUNDWATER LEVEL MEASUREMENT SHEET

Project Name: CRANE
Project No.: N9060
Location: CRANE, IN
Personnel: B. Balkovec / T. Rojahn
Weather Conditions: Mostly Cloudy 70's and Windy
Measuring Device: M-Scope
Tidally Influenced: Yes ____ No _x__
Remarks: SWMU 13

Well or Piezometer Number	Date	Time	Elevation of Reference Point (feet)*	Total Well Depth From TOC (feet)*	Water Level Indicator Reading (feet)*	Groundwater Elevation (feet)*	Comments
13MWT01	5/11/2003	1359	715.34		5.82	709.52	
13MWT02	5/11/2003	1350	704.72		17.10	687.62	
13MWT03	5/11/2003	1401	721.10		8.88	712.22	
13MWT04	5/11/2003	1449	706.84		12.75	694.09	
13MWT05	5/11/2003	1505	696.44		4.13	692.31	
13MWT06	5/11/2003	1402	717.93		15.62	702.31	
13MWT07	5/11/2003	1500	687.22		3.10	684.12	
13MWT08	5/11/2003	1448	700.56		2.92	697.64	
13MWT09	5/11/2003	1405	705.90		7.40	698.50	
13MWT10	5/11/2003	1443	700.15		13.11	687.04	
13MWT11	5/11/2003	1458	682.29		7.78	674.51	
13MWT12	5/11/2003	1457	682.12		7.58	674.54	
13MWT13	5/11/2003	1516	701.98		3.18	698.80	
13MWT14	5/11/2003	1514	705.5		13.08	692.42	
13MWT15	5/11/2003	1432	696.65		12.63	684.02	
13MWT16	5/11/2003	1425	684.35		8.61	675.74	
13MWT17	5/11/2003	1423	693.01		8.09	684.92	
13MWT18	5/11/2003	1436	702.92		19.04	683.88	
13MWT19	5/11/2003	1524	705.82		6.80	699.02	
13MWT20	5/11/2003	1410	702.07		4.00	698.07	
13MWT21	5/11/2003	1421	690.74		7.34	683.40	
13MWT22	5/11/2003	1420	671.96		7.25	664.71	
13MWT23	5/11/2003	1412	699.14		7.17	691.97	
13MWT24	5/11/2003	1413	693.93		8.23	685.70	
13MWT25	5/11/2003	1417	681.57		16.61	664.96	
13MWT26	5/11/2003	1415	687.49		8.93	678.56	

* All measurements to the nearest 0.01 foot

Tetra Tech NUS, Inc.

GROUNDWATER LEVEL MEASUREMENT SHEET

Project Name: CRANE
Project No.: N9060
Location: CRANE, IN
Personnel: B. Balkovec / T. Rojahn
Weather Conditions: Mostly Cloudy 70's and Windy
Measuring Device: M-Scope
Tidally Influenced: Yes ____ No _x__
Remarks: SWMU 13

Well or Piezometer Number	Date	Time	Elevation of Reference Point (feet)*	Total Well Depth From TOC (feet)*	Water Level Indicator Reading (feet)*	Groundwater Elevation (feet)*	Comments
13SG01	5/11/2003	1354	698.35		1.73	696.62	
13SG02	5/11/2003	1355	701.95		3.64	698.31	
13SG03	5/11/2003	1517	696.24		1.96	694.28	
13SG04	5/11/2003	1518	688.99		2.38	686.61	
13SG05	5/11/2003	1520	692.94		3.89	689.05	
13SG06	5/11/2003	1523	704.88		2.37	702.51	
13SG07	5/11/2003	1414	680.30		1.50	678.80	
13SG08	5/11/2003	1419	665.95		5.05	660.90	
13SG09	5/11/2003	1429	675.30		4.15	671.15	
13SG10	5/11/2003	1455	676.1		4.78	671.32	

* All measurements to the nearest 0.01 foot

Tetra Tech NUS, Inc.

GROUNDWATER LEVEL MEASUREMENT SHEET

Project Name: CRANE
Project No.: N9060
Location: CRANE, IN
Personnel: B. Balkovec / T. Rojahn
Weather Conditions: 75 degrees and Sunny
Measuring Device: M-Scope
Tidally Influenced: Yes ____ No __x__
Remarks: SWMU 16

Well or Piezometer Number	Date	Time	Elevation of Reference Point (feet)*	Total Well Depth From TOC (feet)*	Water Level Indicator Reading (feet)*	Groundwater Elevation (feet)*	Comments
WES-14-01-83	5/5/2003	1757	766.67		31.00	735.67	
WES-14-02-83	5/5/2003	1551	766.54		14.23	752.31	
WES-14-03-83	5/5/2003	1443	763.93		18.80	745.13	
WES-14-04-83	5/5/2003	1437	762.99		26.80	736.19	
WES-14-05-83	5/5/2003	1800	769.40		32.59	736.81	
16MWT01	5/5/2003	1422	764.50		25.19	739.31	
16MWT02	5/5/2003	1433	760.36		6.55	753.81	
16MWT03	5/5/2003	1430	764.41		27.20	737.21	
16MWT04	5/5/2003	1426	766.14		8.05	758.09	
16MWT05	5/5/2003	1428	766.88		29.77	737.11	
16MWT06	5/5/2003	1420	764.44		22.33	742.11	
WES-14-01-83	5/30/2003	1714	766.67		31.00	735.67	
WES-14-02-83	5/30/2003	1654	766.54		14.56	751.98	
WES-14-03-83	5/30/2003	1710	763.93		19.83	744.10	
WES-14-04-83	5/30/2003	1718	762.99		27.27	735.72	
WES-14-05-83	5/30/2003	1716	769.40		33.05	736.35	
16MWT01	5/30/2003	1656	764.50		22.70	741.80	
16MWT02	5/30/2003	1706	760.36		12.18	748.18	
16MWT03	5/30/2003	1704	764.41		28.07	736.34	
16MWT04	5/30/2003	1659	766.14		13.14	753.00	
16MWT05	5/30/2003	1701	766.88		30.39	736.49	
16MWT06	5/30/2003	1658	764.44		15.92	748.52	

* All measurements to the nearest 0.01 foot

APPENDIX C.7.2
SWMU 13 AND SWMU 16
WATER LEVEL MEASUREMENT SHEETS
ROUND 2

Tetra Tech NUS, Inc.

GROUNDWATER LEVEL MEASUREMENT SHEET

Project Name:	NSWC CRANE	**Project No.:**	N9060
Location:	SWMU 13	**Personnel:**	T. Rojahn/F. Ramser
Weather Conditions:	Sunny	**Measuring Device:**	M-Scope
Tidally Influenced:	Yes ____ No _X_	**Remarks:**	---

Well or Piezometer Number	Date	Time	Elevation of Reference Point (feet)*	Total Well Depth (feet)*	Water Level Indicator Reading (feet)*	Thickness of Free Product (feet)*	Groundwater Elevation (feet)*	Comments
13SG04	1/19/2004	1535	688.99		2.45	NA	686.54	
13SG05	1/19/2004	1539	692.94		3.9	NA	689.04	
13SG06	1/19/2004	1531	704.88		2.35	NA	702.53	
13SG07	1/19/2004	1319	680.3		1.47	NA	678.83	
13SG08	1/19/2004	1519	665.95		5.08	NA	660.87	
13SG09	1/19/2004	1452	675.3		4.15	NA	671.15	
13SG10	1/19/2004	1433	676.1		4.82	NA	671.28	
13SG11	1/19/2004	1554	675.36		2.74	NA	672.62	

* All measurements to the nearest 0.01 foot

Tetra Tech NUS, Inc.

GROUNDWATER LEVEL MEASUREMENT SHEET

Project Name:	NSWC CRANE	**Project No.:**	N9060
Location:	SWMU 16	**Personnel:**	T. Rojahn
Weather Conditions:	Partly Cloudy w/ Temp. in the 20s	**Measuring Device:**	M-Scope
Tidally Influenced:	Yes ____ No _X_	**Remarks:**	----

Well or Piezometer Number	Date	Time	Elevation of Reference Point (feet)*	Total Well Depth (feet)*	Water Level Indicator Reading (feet)*	Thickness of Free Product (feet)*	Groundwater Elevation (feet)*	Comments
WES-14-01-83	1/24/2004	1032	766.67		31.94	NA	734.73	
WES-14-02-83	1/24/2004	0935	766.54		15.36	NA	751.18	
WES-14-03-83	1/24/2004	1047	763.93		20.00	NA	743.93	
WES-14-04-83	1/24/2004	1041	762.99		28.39	NA	734.6	
WES-14-05-83	1/24/2004	1038	769.40		34.18	NA	735.22	
16MWT01	1/24/2004	0945	764.50		19.12	NA	745.38	
16MWT02	1/24/2004	1024	760.36		10.94	NA	749.42	
16MWT03	1/24/2004	1021	764.41		28.34	NA	736.07	
16MWT04	1/24/2004	1015	766.14		13.11	NA	753.03	
16MWT05	1/24/2004	1018	766.88		31.44	NA	735.44	
16MWT06	1/24/2004	0947	764.44		17.41	NA	747.03	
16MWT07	1/24/2004	1003	762.87		Dry	NA	Dry	
16MWT08	1/24/2004	1005	761.56		97.03	NA	664.53	
16MWT09	1/24/2004	1008	764.28		13.88	NA	750.4	
16MWT10	1/24/2004	1010	764.43		22.05	NA	742.38	
16MWT11	1/24/2004	1012	765.24		96.3	NA	668.94	
16MWT12	1/24/2004	1044	755.45		20.13	NA	735.32	
16MWT13	1/24/2004	1025	759.57		10.25	NA	749.32	
16MWT14	1/24/2004	---	Abandoned		Abandoned	NA	Abandoned	
16MWT15	1/24/2004	1026	759.69		53.23	NA	706.46	
16MWT16	1/24/2004	0956	764.74		32.93	NA	731.81	
16MWT17	1/24/2004	1000	766.53		15.35	NA	751.18	
16MWT18	1/24/2004	0951	764.44		96.65	NA	667.79	

* All measurements to the nearest 0.01 foot

Tetra Tech NUS, Inc.

GROUNDWATER LEVEL MEASUREMENT SHEET

Project Name:	NSWC CRANE	**Project No.:**	N9060
Location:	SWMU 13	**Personnel:**	T. Rojahn/F. Ramser
Weather Conditions:	Sunny	**Measuring Device:**	M-Scope
Tidally Influenced:	Yes ____ No _X_	**Remarks:**	---

Well or Piezometer Number	Date	Time	Elevation of Reference Point (feet)*	Total Well Depth (feet)*	Water Level Indicator Reading (feet)*	Thickness of Free Product (feet)*	Groundwater Elevation (feet)*	Comments
13MWT01	1/19/2004	1347	715.34		7.55	NA	707.79	
13MWT02	1/19/2004	1357	704.72		16.24	NA	688.48	
13MWT03	1/19/2004	1344	721.10		9.98	NA	711.12	
13MWT04	1/19/2004	1408	706.84		14.09	NA	692.75	
13MWT05	1/19/2004	1404	696.44		5.78	NA	690.66	
13MWT06	1/19/2004	1342	717.93		11.91	NA	706.02	
13MWT07	1/19/2004	1417	687.22		4.21	NA	683.01	
13MWT08	1/19/2004	1412	700.56		3.88	NA	696.68	
13MWT09	1/19/2004	1337	705.90		8.77	NA	697.13	
13MWT10	1/19/2004	1421	700.15		14.96	NA	685.19	
13MWT11	1/19/2004	1427	682.29		8.76	NA	673.53	
13MWT12	1/19/2004	1430	682.12		10.75	NA	671.37	
13MWT13	1/20/2004	1128	701.98		4.93	NA	697.05	
13MWT14	1/20/2004	1104	705.50		14.17	NA	691.33	
13MWT15	1/19/2004	1443	696.65		14.59	NA	682.06	
13MWT16	1/19/2004	1501	684.35		11.01	NA	673.34	
13MWT17	1/19/2004	1458	693.01		8.89	NA	684.12	
13MWT18	1/19/2004	1446	702.92		20.21	NA	682.71	
13MWT19	1/20/2004	1058	705.82		10.96	NA	694.86	
13MWT20	1/19/2004	1333	702.07		5.00	NA	697.07	
13MWT21	1/19/2004	1508	690.74		9.09	NA	681.65	
13MWT22	1/19/2004	1516	671.96		8.18	NA	663.78	
13MWT23	1/19/2004	1331	699.14		8.5	NA	690.64	
13MWT24	1/19/2004	1328	693.93		9.25	NA	684.68	
13MWT25	1/19/2004	1523	681.57		7.05	NA	674.52	

* All measurements to the nearest 0.01 foot

Tetra Tech NUS, Inc.

GROUNDWATER LEVEL MEASUREMENT SHEET

Project Name:	NSWC CRANE	**Project No.:**	N9060
Location:	SWMU 13	**Personnel:**	T. Rojahn/F. Ramser
Weather Conditions:	Sunny	**Measuring Device:**	M-Scope
Tidally Influenced:	Yes ____ No _X_	**Remarks:**	----

Well or Piezometer Number	Date	Time	Elevation of Reference Point (feet)*	Total Well Depth (feet)*	Water Level Indicator Reading (feet)*	Thickness of Free Product (feet)*	Groundwater Elevation (feet)	Comments
13MWT26	1/19/2004	1326	687.49		10.05	NA	677.44	
13MWT27	1/19/2004	1441	698.13		9.31	NA	688.82	
13MWT28	1/19/2004	1339	705.55		79.63	NA	625.92	
13MWT29	1/20/2004	1122	700.44		5.82	NA	694.62	
13MWT30	1/20/2004	1109	698.94		11.72	NA	687.22	
13MWT31	1/20/2004	1052	696.21		10.65	NA	685.56	
13MWT32	1/20/2004	1039	696.04		9.52	NA	686.52	
13MWT33	1/20/2004	1048	701.97		10.63	NA	691.34	
13MWT34	1/19/2004	1512	695.93		5.42	NA	690.51	
13MWT35	1/19/2004	1424	681.73		63.96	NA	617.77	
13MWT36	1/20/2004	0900	667.21		19.26	NA	647.95	
13MWT37	1/20/2004	0913	662.29		14.37	NA	647.92	
13MWT38	1/20/2004	0911	661.04		61.9	NA	599.14	
13MWT39	1/20/2004	0920	654.44		14.25	NA	640.19	
13MWT40	1/20/2004	0941	667.18		18.55	NA	648.63	
13MWT41	1/20/2004	0940	665.67		66.58	NA	599.09	
13MWT42	1/20/2004	0949	670.31		21.14	NA	649.17	
13MWT43	1/20/2004	1002	690.9		8.50	NA	682.4	
13MWT44	1/20/2004	1007	683.82		64.57	NA	619.25	
13MWT45	1/19/2004	1505	690.59		72.75	NA	617.84	
13MWT46	1/20/2004	0925	653.61		58.1	NA	595.51	
13MWT47	1/20/2004	1115	677.23		7.32	NA	669.91	
13SG01	1/19/2004	1401	698.35		1.77	NA	696.58	
13SG02	1/19/2004	1351	701.95		3.68	NA	698.27	
13SG03	1/19/2004	1602	696.24		1.87	NA	694.37	

* All measurements to the nearest 0.01 foot

APPENDIX C.8.1
SWMU 13 AND SWMU 16
FIELD TASK MODIFICATION REQUEST FORMS
ROUND 1

TETRA TECH NUS
FIELD TASK MODIFICATION REQUEST FORM

NSWC CRANE Project/Installation Name	0279/9060 CTO & Project Number	9060-01 Task Mod. Number
QAPP/SEC. 3.5.4 Modification To (e.g. Work Plan)	SWMUs 13 & 16 Site/Sample Location	MARCH 4, 2003 Date

Activity Description: WELL DRILLING at SWMUs 13 & 16 WAS PROPOSED USING DPT OR hollow STEM AUGER with split spoon SAMPLING ABOVE BEDROCK AND ROTARY DRILLING BELOW BEDROCK.

Reason for Change: THIS Activity CAN best be ACCOMPLISHED USING SONIC (ALSO REFERRED to AS ROTASONIC) TECHNOLOGY.

THE ADDVANTAGES OF USING SONIC TECHNOLOGY ARE LISTED ON THE ATTACHED SHEET.

Recommended Disposition: INSTALL MONITORING WELLS @ SWMUs 13 & 16 USING SONIC TECHNOLOGY

Terry Rojahn
Field Operations Leader (Signature)

03-04-03
Date

Approved Disposition:

Ralph Rosenthal
Project/Task Order Manager (Signature)

3/21/03
Date

Distribution:

Program/Project File –
Project/Task Order Manager –
Field Operations Leader –

Other:

ADDVANTAGES TO SONIC TECHNOLOGY

- Improves productivity.
- While drilling is performed a casing is advanced, therefore, eliminating the need for a permanent casing to be installed in the unconsolidated material.
- Drilling provides a continuous core with nearly a 100% recovery rate thus facilitating borehole logging activities.
- Larger sample volume (4-inch diameter by 5-foot long).
- This technology produces a cleaner hole thus enhancing well development.
- Produces less IDW.
- It can be set up for DPT.

Sonic Technology Description

Bowser-Morner's four sonic rigs are among the newest on the market. While actual depth capability in various formations is unkown, these 'new and improved' rigs are capable of advancing in excess if 400' using 4", 6", 8", 10" or 12" sonic tooling. A brief discussion of Sonic technology follows.

A sonic drill uses high frequency mechanical oscillations, developed in the special drill head, to transmit resonant vibrations and rotary power through the drill tooling to the drill bit allowing it to achieve exceptional drilling penetration rates without the need for drilling fluids or air to effectively take overburden core samples. This is accomplished by the oscillator's conversion of centrifugal force generated by counter rotating, chambered rollers to sinusoidal or longitudinal force. Frequencies in excess of 180 Hz (as previously mentioned) are generated. These frequencies match the natural frequency of the drill tooling, causing no dampening of the vibratory wavelength to the bit. Therefore, this sonic vibratory action fluidizes the soil particles, destroying the shear strength and pushing the particles away from the tip of the drill bit and along the sides of the drill string. This liquefaction process allows for clean, rapid and smooth penetration of overburden formations.

This unique methodology allows the machine to perform overburden and even bedrock core sample drilling with speed, precision, and an absolute minimal amount of disturbance and compaction that cannot be accomplished by any other equipment.

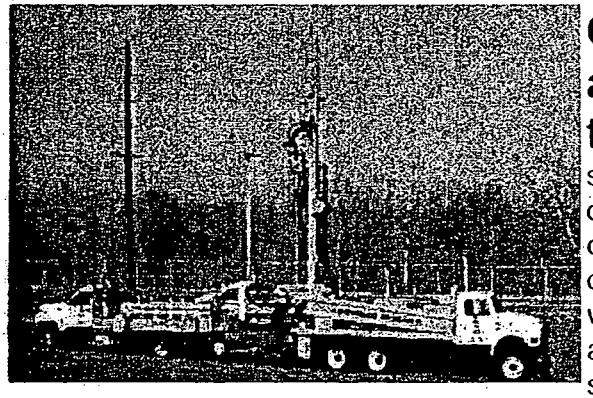

One of the main advantages of the sonic drill is its superior ability to produce continuous core samples of both unconsolidated and consolidated formations with significant detail and accuracy. The core samples can be analyzed to provide a precise and detailed stratigraphic profile of any overburden condition including dry or wet saturated sands and gravels, cobbles and boulders, clays, silts and hard tills. Recovery of a sample is as consistently close to 100% as any other boring

methodology.

The sonic rig also utilizes a dual line of drill pipe. The inner string of drill rods has the core barrel(s) attached. All overburden core sampling is done ahead of the outer string of drill casing with no fluid or air added to insure accurate, representative, undiluted samples. After the core barrel has been advanced, the outer drill casing is advanced to the same depth. This can best be accomplished with water; however, dry casing advancement methods can also be employed and are often performed by Bowser-Morner. With the outer casing left in place to hold the hole open, the core barrel is then removed from the borehole. The core sample can then be extracted into plastic sleeves, stainless steel sample trays, wooden core boxes or virtually any container. The outer drill casing ensures there is no sample contamination from uphole material by sealing it off prior to each sample run.

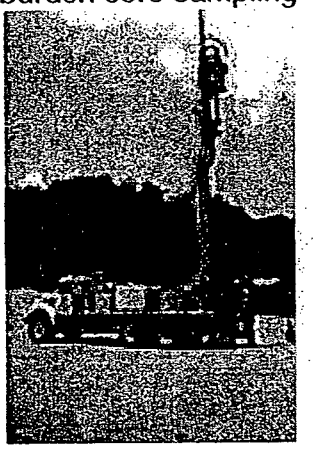

Also, when water use is permitted for casing advancement, it is by far the quickest and most effective means of combating heaving sands without the use of drilling mud or bentonite.

The outer casing also serves to hold the borehole open for installation of monitoring wells, piezometers, vents, observation wells, instrumentation or other downhole equipment. The outer drill casing has nominal diameters of 6" and 8", allowing ample space to install 2" and 4" wells with a 1" or 1 1/4" tremie pipe to place sand packs, seals, slurries and grouts into the annular space between the well screen/riser and the outer casing and borehole annulus. The drill bits used on the outer drill casing are open and are 5 7/8" through 8 1/2" diameter depending on borehole size requirements.

Another unique feature of the Sonic drilling method is the ability to ensure the filter pack and bentonite chip or pellet seal can actually be compacted into the borehole annulus by the resonant vibration applied to the outer casing as it is extracted from the borehole with the well screen and riser, pack, seal and grout or slurry installed in the annular space. The vibratory effect makes 'bridging' unheard of and virtually eliminates the potential problem of locking the well and pulling it back as the outer casing string is extracted. This positive placement of well backfill materials allows for very controlled and quick well installations. Coupled with the lack

of cuttings slurry, such as in auger drilling, this positive placement greatly reduces well development time and increases well yields.

As required, the Sonic can retrieve thin wall (Shelby) or lined split spoon samples for lab analysis. Another feature is the ability to vibrate a two-inch drive point screen on the end of drill rods with an inflatable packer to seal off the casing. Then, a submersible pump can be lowered in the drill rods to evacuate x volumes of water before collecting a water sample.

Other features of the rig are:

1. It can be set up for conventional air coring;
2. It can drill hard bedrock by conventional air rotary or downhole hammer methods;
3. It can also be operated as a straight fluid rotary machine;
4. It can core through rocks and boulders and most bedrock formations;
5. Due to the liquefaction principal, it produces a fraction of the drill cuttings and fluids that other methods produce.

The speed, efficiency, superior sampling procedure, depth capacity, safety, reduction of drill cuttings and fluids, and the versatility of the Sonic machine make it a very cost effective and productive way of drilling, sampling, and installing.

Applications include environmental borings, installation of monitoring wells, aggregate exploration (ideal with the large diameter sample to significant depths), rock exploration, methane probes, conductor casing installation, extraction wells, instrumentation and virtually any other application < 12" in diameter and 500' in depth. We have also set up the Sonic for angle borings up to 45. Our Sonic Rig can advance a borehole up to 18" in diameter with some modifications, such as fabrication of an appropriate-sized trash barrel, customized rod make up/break-out, etc.

With the addition of Sonic capability, Bowser-Morner has acquired the latest technology to the subsurface industry and shown its 'commitment to excellence' once again in meeting customers' needs.

Boring, Sampling and Testing Rigs and Equipment

Environmental || Geotechnical and Mineral || Other Applications || Sonic Technology Applications
Well Rehabilitation Services

Home || Analytical Services || Geotechnical Engineering || Construction Materials Testing
Construction Field Observation & Testing || Environmental Services || Subsurface Explorations
Radon Laboratory Services || What's New || More About Us
Accreditations & Qualifications || Contact Us

TETRA TECH NUS
FIELD TASK MODIFICATION REQUEST FORM

NSWC CRANE Project/Installation Name	0279/9060 CTO & Project Number	9060-02 Task Mod. Number
QAPP/SEC. 3.5.4 Modification To (e.g. Work Plan)	SWMUS 13 & 16 Site/Sample Location	MARCH 4, 2003 Date

Activity Description: Work plan states that bentonite pellets be allowed to hydrate for at least 3 hours before grout is added to the hole.

Reason for Change: To shorten the time allowed for hydration of bentonite pellets. Waiting 3 hours is not necessary if a high-solids bentonite is used in lieu of a cement/bentonite mix.

Recommended Disposition: After 3 feet of bentonite pellets are placed above the sand pack, allow pellets to hydrate for 1 hour before grout mix is added. Then instead of cement/bentonite mix, use a 30% high solids bentonite mix to approximately 4 feet below ground surface. This one hour wait is sufficient based on conversations w/ bentonite supplier and paper by Jim Papp.

Terry Roach — 03-04-03
Field Operations Leader (Signature) — Date

Approved Disposition:

Ralph Ramsey — 3/21/03
Project/Task Order Manager (Signature) — Date

Distribution:

Program/Project File –
Project/Task Order Manager –
Field Operations Leader –

Other:

VOCs as indicated by the PID reading). The duplicate samples should be placed in the same type of containers and handled in the same manner as the regular soil samples. The duplicate samples will be given unique QC sample identifications (see SOP CTO166-02). One rinsate blank will be collected for every 10 soil samples. For soil samples, the rinsate blank will consist of running distilled water over a decontaminated sampling spoon into a decontaminated mixing bowl. This water will be used to fill sample bottles for the rinsate blank. This process will continue until all the necessary bottles are filled for the rinsate sample (see Tables 3-3 and 3-16).

Soil borings will be backfilled with either the soil cuttings (if uncontaminated) or bentonite pellets (if contaminated) in accordance with Section 3.11.

When a boring has been sampled and backfilled, it will be identified by a tall wooden lath driven into the soil near the boring; a 2-by-2-inch inch wooden stake will be driven into the center of the backfilled boring. The stake and the lath will both have brightly colored flagging attached to them to increase visibility, and both will be labeled using a waterproof marker with a unique soil boring number, corresponding to the boring log containing the survey data for the boring.

3.5.3 Inspection and Repair of Existing Monitoring Wells

Existing monitoring wells at SWMU 16 (WES-14-01-83 through WES-14-05-83) will be sampled as part of this investigation. These wells may have broken casings, bent casings, missing caps, no locks, broken locks, obstructions, and other problems. In addition, it is likely that some of the wells may contain enough sediment at the bottom that the well screen may be partially or totally clogged. Therefore, at the beginning of field activities, the existing wells will be located, inspected, and repaired if possible. For example, broken or bent polyvinyl chloride (PVC) riser pipes above the ground surface will be sawed off and new riser pipes will be added. Caps and locks will be replaced if necessary. The height of casing above ground surface and the depth to the bottom of the well will be measured and recorded. This information will be compared to the boring logs and well construction logs to confirm that the wells are open through the screen interval. These activities are addressed in SOP CTO166-09. Each of the existing wells will need to be redeveloped (see SOP CTO166-10) before any sampling can occur. After sampling all existing wells will be resurveyed.

3.5.4 Well Drilling and Installation

A total of 57 shallow wells will be installed at SWMUs 12, 13, and 16, and 30 wells may be installed at SWMU 19 as part of this investigation. Shallow well borings that do not encounter bedrock will be drilled

using DPT or hollow-stem auger drilling with split-spoon soil sampling. In some locations at SWMUs 12, 13, and 16, bedrock may be reached before shallow ground water is encountered. At these locations, monitoring wells will be completed as bedrock installations using rotary drilling.

At SWMUs 12, 13, and 16, where bedrock well installations are anticipated, up to two (SWMU 16) or four (SWMUs 12 and 13) well borings will be continuously sampled using hollow-stem auger drilling with split-spoon soil sampling or DPT through the soil until bedrock is reached; this will be continued with rotary coring to the final depth (minimum 2-inch-diameter samples). The soil samples and bedrock cores should provide an accurate characterization of stratigraphy, fracture distribution, and other features of the soil and rock units spanning the study area. Procedures for drilling and logging a boring in rock are included in SOP CTO166-11. After these holes have been cored, they will be enlarged to a minimum diameter of 5 inches using an air rotary drill rig. Remaining borings that extend into bedrock will be drilled using air rotary methods. Geologic logging of these borings will be based on the rock chips brought up with the circulating air (SOP CTO166-11). In addition, the rates of water produced during drilling will be carefully observed in order to identify rock zones that might be fractured and have above-average permeability characteristics. Drilling standby may be required to monitor for the presence of ground water.

Either a temporary steel casing or hollow-stem auger flights will be placed through the overburden and into the bedrock to minimize collapse and to minimize downward vertical contaminant migration during drilling of the bedrock borings. The temporary casings or auger flights will be removed just after the installation of the permanent PVC riser pipe, sand pack, and bentonite pellet seal; and immediately before installation of the ~~cement bentonite grout.~~ high solids bentonite mixture.

~~At least three each of the shallow well~~ borings at SWMUs 12, 13, and 16 (to be identified by the field geologist) will be sampled continuously through the overburden, using either DPT or split-spoon sampling, until the total depth is reached or bedrock drilling is conducted. The remaining shallow well borings may be sampled at 5-foot intervals or as determined by the field geologist. Bedrock drilling, if required in the shallow well borings, can be conducted using a conventional rotary drilling with a roller bit and water wash.

A permanent monitoring well will be installed in each of the well borings. The wells will be constructed of 2-inch-diameter, Schedule 40, flush joint, PVC riser pipe and slotted screen (see SOP CTO166-12). In each well, the screen will be 10 feet long and have a slot size of 0.02 inch (factory slotted). All riser pipe and screen sections will be new and certified clean. Each well will consist of slotted screen and enough solid riser pipe above so that the riser will extend approximately 2.5 feet above the ground surface.

(20 to 40 Sieve Size)

A sand filter pack will be placed around the annulus of the well screen, from the bottom of the hole upward to 3 feet above the top of the well screen. Three feet of bentonite chips will be placed above the sandpack, and they will be allowed to wet and expand for at least ~~3~~ 1½ hours before bentonite grout is added to the hole. After at least ~~3~~ 1½ hours has elapsed, the remainder of the well annulus will be filled up to the ground surface with a ~~cement bentonite grout~~ mixture. A tremie pipe will be used to place ~~grout~~ the high solids mixture in the well annulus to help ensure a good seal. 30% high solids bentonite to approximately 4 feet bgs. The remainder of the annulus will be filled with cement to the surface pad. ~~around the well annulus~~. An outer, black steel protective casing will be installed around the PVC casing. The outer casing will extend at least 2 feet below the ground surface and no more than 4 inches above the inner PVC well cap. The steel casing will have a hinged cap, or removable cap, and a padlock. A 6-inch-thick, ~~3~~ 4-by-~~3~~ 4-foot concrete surface pad will be placed around the well at the ground surface. In addition, ~~three~~ four barrier posts will be installed around the concrete pad. Details regarding well construction sand pack and grout materials, the outer protective casing, the well pad, and the protective barrier posts are included in SOP CTO166-12. ??

3.5.5 Packer Testing of Uncased Borings

At SWMUs 12, 13, or 16, where bedrock well installations are anticipated, the cored well borings may also be packer tested. The decision to perform packer testing will be based on information collected during drilling (fractures, water yield, and/or total footage cored) that would warrant a more detailed evaluation of specific water-yielding zones in the bedrock. A double inflatable packer assembly attached to the drill string of the drilling rig will be used to hydraulically test specific sections of each new uncased boring. The procedures for conducting a packer test are presented in SOP CTO166-13. The packer assembly will be thoroughly decontaminated before being placed in a boring. The inflatable packers will be set 5 to 10 feet apart (i.e., the vertical section of rock tested in a single test is 5 to 10 feet). The packer assembly will be lowered down the boring so that the packers isolate a section of the hole that was identified during drilling as being fractured or yielding above-average rates of ground water. Two to three different zones will be tested for each hole, as determined by the field geologist. The number and depths of the zones to be tested will be determined by the FOL and lead field geologist based on their best judgment.

The packer tests will be the pump-out type, where ground water is pumped out of the hole from the isolated section of boring. A pump positioned between the two packers will pump water out of the packed-off interval. Thus, no external water will be introduced to the holes during the packer tests. The flow rate of water discharging from the pump and the hydraulic pressure within the pack-off interval will be measured frequently during the test. The pumping rate will be held nearly constant. Initially, the pumping rate will be at a low level (e.g., 1 gallon per minute or less). If this pumping rate can be sustained for 15 minutes and the water level stabilizes, then the rate will be increased to about 5 gallons per minute.

TETRA TECH NUS
FIELD TASK MODIFICATION REQUEST FORM

NSWC CRANE Project/Installation Name	0279 / 9060 CTO & Project Number	9060-03 Task Mod. Number
QAPP / TABLE 3-1 SEC. 3.5.7 Modification To (e.g. Work Plan)	SWMUS 13 & 16 GROUNDWATER & SURFACE WATER Site/Sample Location	MARCH 4, 2003 Date

Activity Description: FIELD MEASUREMENTS FOR NITRATE IN GROUNDWATER (found in SECTION 3.5.7) were to be Accomplished USING A HACH FIELD TEST KIT AS PRESENTED IN TABLE 3-1 OF the QAPP.

Reason for Change: Nitrate analysis will be performed by a FIXED BASE LAB for All groundwater and surface water sampling locations at SWMUs 13 & 16.
For consistency nitrate will be analyzed in surface water to Establish a possible link with groundwater.

Recommended Disposition: FIELD ANALYSIS OF nitrate will not be necessary SINCE nitrate will be ANALYZED by A FIXED BASE LAB.

Terry Rogalski
Field Operations Leader (Signature)

03-04-03
Date

Approved Disposition:

Ralph Pharnoski
Project/Task Order Manager (Signature)

3/21/03
Date

Distribution:

Program/Project File –
Project/Task Order Manager –
Field Operations Leader –

Other:

TETRA TECH NUS
FIELD TASK MODIFICATION REQUEST FORM

NSWC CRANE Project/Installation Name	0279/9060 CTO & Project Number	9060-04 Task Mod. Number
QAPP (SEC. 3.5.10 Modification To (e.g. Work Plan)	SWMUS 13 & 16 SURFACE WATER Site/Sample Location	MARCH 4, 2003 Date

Activity Description: QAPP states that A filtered surface water sample collected for dissolved metals analysis is to be drawn into a plastic syringe and forced through a 0.45-µm filter cartridge directly into a sample container.

Reason for Change: SOP CTO166-19 states that new, clean, disposable tubing and a 0.45µm filter will be used in combination with A peristaltic pump @ EACH SURFACE WATER SAMPLING LOCATIONS. Also, given the fact that the dedicated filter should be pre-rinsed w/sample water and the volume of sample required the peristaltic pump is the better method.

Recommended Disposition: Follow NSWC CRANE SOP CTO166-19

Terry Rogers
Field Operations Leader (Signature)

03-04-03
Date

Approved Disposition:

Ralph Ramsler
Project/Task Order Manager (Signature)

3/4/03
Date

Distribution:

Program/Project File –
Project/Task Order Manager –
Field Operations Leader –

Other:

TETRA TECH NUS
FIELD TASK MODIFICATION REQUEST FORM

NSWC CRANE Project/Installation Name	0279/9060 CTO & Project Number	9060-05 Task Mod. Number
QAPP / SEC. 3.4.2 TABLE 3-5 Modification To (e.g. Work Plan)	Groundwater @ SWMUs 13 & 16 Site/Sample Location	March 4, 2003 Date

Activity Description: SEC. 3.4.2 states that one rinsate sample will be collected and analyzed each day... Table 3-5 reflects a rate of 1 per 10 samples with a min. of one per day of sampling.

Reason for Change: Historically @ Crane the frequency of rinsate blanks through bladder pumps has been 1 per 5 samples. Additionally, if a peristaltic pump is used to purge & sample some of the monitoring wells then one batch blank on the dedicated disposable equipment used was considered sufficent. Note: U.S. EPA Region 5 RCRA QAPP guidance says field blank (i.e. rinsate) frequency = 1/10 Tbl 3-5-03

Recommended Disposition: Bladder pump rinsate frequency - 1 per 5 samples. Peristaltic pump - Batch blank on disposable equipment (i.e., all tubing & filter lots).

Terry Rogel
Field Operations Leader (Signature)

March 4, 2003
Date

Approved Disposition:

Ralph Baranski
Project/Task Order Manager (Signature)

3/21/03
Date

Distribution:

Program/Project File –
Project/Task Order Manager –
Field Operations Leader –

Other:

TETRA TECH NUS
FIELD TASK MODIFICATION REQUEST FORM

NSWC Crane	0279/9060	9060-06
Project/Installation Name	CTO & Project Number	Task Mod. Number
QAPP/Table 3-2 pg 33	SWMUs 13 & 16	March 18, 2003
Modification To (e.g. Work Plan)	Site/Sample Location	Date

Activity Description: Ammonia is listed under Miscellanous Parameters to be analyzed for in Soils for SWMU 13.

Reason for Change: Ammonia should not be analyzed in soils for SWMU 13.

Recommended Disposition: Remove Ammonia from analyses for soils for SWMU 13

Edward Sedlmyer — 3/18/03

~~Field Operations Leader~~ (Signature) — Date

Project Chemist

Approved Disposition:

Ralph Rosenke — 3/21/03

Project/Task Order Manager (Signature) — Date

Distribution:

Program/Project File –
Project/Task Order Manager –
Field Operations Leader –

Other: _____

TABLE 3-2

SUMMARY OF SOIL SAMPLES AND LABORATORY ANALYSES
CTO 166
NSWC CRANE, CRANE, INDIANA
PAGE 2 OF 7

	Parameters [1]	Volatiles [2]		Semivolatiles			Explosives		Dioxin	Dyes	PCBs	Metals		Miscellaneous Parameters					
Description	Sample ID	SW-846 8260B	SW-846 8015B	SW-846 8270C	Selected Ion Monitoring	SW-846 8151A	SW-846 8330	Picrates	SW-846 8290	NSWC Crane	SW-846 8082	Metals SW-846 6020	Mercury SW-846 7471A	Cyanide	Perchlorate	TOC	CEC	pH	Ammonia
13SB03	0-2 ft bgs			1	1	1			1		1								
	0-4 ft bgs			1	1	1			1		1								
13SB04	0-2 ft bgs			1	1	1			1		1								
	0-4 ft bgs			1	1	1			1		1								
13SB05	0-2 ft bgs			1	1	1			1		1								
	0-4 ft bgs			1	1	1			1		1								
13SB06	0-2 ft bgs	1	1	1	1	1			1		1								
	0-4 ft bgs	1	1	1	1	1			1		1								
13SB07	0-2 ft bgs															1	1	1	~~1~~
	above water table															1	1	1	~~1~~
13SB08	0-2 ft bgs															1	1	1	~~1~~
	above water table															1	1	1	~~1~~
13SB09	0-2 ft bgs			1	1	1			1		1								
	0-4 ft bgs			1	1	1			1		1								
13SB10	0-2 ft bgs			1	1	1			1		1								
	0-4 ft bgs			1	1	1			1		1								
13SB11	0-2 ft bgs			1	1	1			1		1								
	0-4 ft bgs			1	1	1			1		1								
13SB12	0-2 ft bgs			1	1	1			1		1								
	0-4 ft bgs			1	1	1			1		1								
13SB13	0-2 ft bgs			1	1	1			1		1								
	0-4 ft bgs			1	1	1			1		1								
13SB14	0-2 ft bgs			1	1	1			1		1								
	0-4 ft bgs			1	1	1			1		1								
13SB15	0-2 ft bgs			1	1	1			1		1								
	0-4 ft bgs			1	1	1			1		1								
13SB16	0-2 ft bgs			1	1	1			1		1								
	0-4 ft bgs			1	1	1			1		1								
Total Samples SWMU 13		2	2	28	28	28	0	0	28	0	28	0	0	0	0	4	4	4	~~4~~ 0
SWMU 16																			
16SB01	0-2 ft bgs	1	1	1	1	1	1	1			1	1	1						
	TBD	1		1	1	1	1	1			1	1	1						
16SB02	0-2 ft bgs	1	1	1	1	1	1	1			1	1	1			1	1	1	
	TBD	1		1	1	1	1	1			1	1	1			1	1	1	
16SB03	0-2 ft bgs	1	1	1	1	1	1	1			1	1	1						
	TBD	1		1	1	1	1	1			1	1	1						
16SB04	0-2 ft bgs	1	1	1	1	1	1	1			1	1	1						

TETRA TECH NUS
FIELD TASK MODIFICATION REQUEST FORM

NSWC Crane	0279/9060	9060-07
Project/Installation Name	CTO & Project Number	Task Mod. Number
QAPP/Table 3-16 pg 60	SWMUs 13 & 16	March 18, 2003
Modification To (e.g. Work Plan)	Site/Sample Location	Date

Activity Description: Nitrate/Nitrite and Ammonia analyses are missing from Table 3-16.

Reason for Change: To complete Table 3-16

Recommended Disposition: Add Nitrate/Nitrite and Ammonia analyses to Table 3-16.

Ed Sedlmayer — 3/18/03

~~Field Operations Leader~~ (Signature) — Date

Project Chemist

Approved Disposition:

Ralph Rusinski — 3/21/03

Project/Task Order Manager (Signature) — Date

Distribution:

Program/Project File –
Project/Task Order Manager –
Field Operations Leader –

Other: _____

TABLE 3-16

SUMMARY OF SAMPLE ANALYSES, CONTAINER TYPES AND VOLUMES, PRESERVATION REQUIREMENTS, AND HOLDING TIMES FOR AQUEOUS SAMPLES
CTO 166, NSWC CRANE
PAGE 1 OF 2

Parameter	Analyte/Methodology	Sample Container	Container Volume	Preservation[1]	Maximum Holding Time[2]
Explosives	Explosives SW-846 8330	Amber glass, Teflon-lined cap	(2) 1000 mL	Cool to 4 °C, dark	Extraction 7 days; analysis within 40 days of extraction
	Picric and Picramic Acid Laucks HPLC Method	Amber glass, Teflon-lined cap	(2) 1000 mL	Cool to 4 °C, dark	Extraction 7 days; analysis within 40 days of extraction
Metals	Total SW-846 6020, 7470A	Polyethylene, plastic cap w/ plastic liner	1000 mL	HNO_3 to pH <2	Within 180 days; mercury within 28 days
	Dissolved SW-846 6020, 7470A	Polyethylene, plastic cap w/ plastic liner	1000 mL	HNO_3 to pH <2	Within 180 days; mercury within 28 days
Volatiles	SW-846 8260B	Glass, black phenolic plastic screw cap, Teflon-lined septum	(6) 40 mL	Cool to 4 °C, dark, zero headspace, HCl to pH <2	14 days to analysis
	SW-846 8015B	Glass, black phenolic plastic screw cap, Teflon-lined septum	(6) 40 mL	Cool to 4 °C, dark, zero headspace, HCl to pH <2	14 days to analysis
Semivolatile	SW-846 8270C	Amber glass, Teflon-lined cap	(2) 1000 mL	Cool to 4 °C, dark	Extraction 7 days; analysis within 40 days of extraction
	Selective Ion Monitoring SW-846 8270C	Amber glass, Teflon-lined cap	(2) 1000 mL	Cool to 4 °C, dark	Extraction 7 days; analysis within 40 days of extraction
	PCP and Hexachlorophene SW-846 8151A	Amber glass, Teflon-lined cap	(2) 1000 mL	Cool to 4 °C, dark	Extraction 7 days; analysis within 40 days of extraction
PCBs	PCBs SW-846 8082	Amber glass, Teflon-lined cap	(2) 1000 mL	Cool to 4 °C, dark	Extraction 7 days; analysis within 40 days of extraction
Dyes	NSWC Crane	Amber glass, Teflon-lined cap	(2) 1000 mL	Cool to 4 °C, dark	Extraction 7 days; analysis within 40 days of extraction
Dioxin	SW-846 8290	Amber glass, Teflon-lined cap	(2) 1000 mL	Cool to 4 °C	Extraction 30 days; analysis within 45 days of extraction
Perchlorate	EPA Method 314.0	Polyethylene, plastic cap w/ plastic liner	500 mL	Cool to 4 °C, dark	28 days to analysis
Nitrate/nitrite	EPA Method 353.2	"	"	"	"
Ammonia	EPA Method 350.1	"	"	"	"

TETRA TECH NUS
FIELD TASK MODIFICATION REQUEST FORM

NSWC CRANE	0279/9060	9060-08
Project/Installation Name	CTO & Project Number	Task Mod. Number
QAPP / FIGURES 3-2 & 3-3	SWMUS 13 & 16	6-09-03
Modification To (e.g. Work Plan)	Site/Sample Location	Date

Activity Description: Upon receipt of the actual survey data the surveyed sample locations were compared to the proposed sample locations.

Reason for Change: Significantly shifted sampling locations are addressed individually in the attached table. At SWMU16 all other miner shifts (235') were representative of the area to be sampled. These locations were measured in (Not surveyed) and shifted due mainly to line of sight obstructions (e.g. railroad cars, trees, magazine, etc.)

Recommended Disposition: NA

Terry Rogil — 6-09-03

Field Operations Leader (Signature) — Date

Approved Disposition:

Ralph Rosenberg — 6/10/03

Project/Task Order Manager (Signature) — Date

Distribution:

Program/Project File –
Project/Task Order Manager –
Field Operations Leader –

Other:

SAMPLING LOCATIONS SHIFTED SIGNIFICANTLY (50 FEET OR MORE) FROM THE PROPOSED LOCATION AS A RESULT OF A FIELD DECISION

SAMPLING LOCATION	DIRECTION MOVED	DISTANCE MOVED	REASON(S) MOVED
13MWT01	NE	~50'	(1)
13MWT02	SE	~50'	(2) & (3)
13MWT04	SW	~120'	(1)
13MWT06	SW	~60'	(2)
13MWT08	NNE	~70'	(4)
13MWT09	W	~190'	(5)
13MWT11	NE	~60'	(2)
13MWT14	SE	~90'	(3)
13MWT15	SE	~50'	(6)
13MWT19	SSE	~120	(3)
13MWT20	N	~100'	(5)
13MWT21	SW	~60'	(2) & (3)
13MWT25	NW	~60'	(2) & (3)
13SW/SD03	S	~140'	(7)
13SW/SD04	SE	~50'	(8)
13SW/SD05	NW	~100'	(5)
13SW/SD06	NW	~80'	(5)
13SW/SD07	NW	~60'	(5)
13SW/SD08	SE	~70'	(8)
13SW/SD09	SW	~70'	(7)
13SW11	E	~60'	(5) & (7)
13SW/SD09	NW	~50'	(7)
13SD21	SE	~60'	(9)
13SB07	E	~50'	(10)
16SD11	WSW	~160	(5)

(1) Moved to avoid steep terrain
(2) Moved to avoid possible underground utilities
(3) Moved to avoid a congested area (surface obstructions, above ground utilities, traffic hazards, parking lot, etc.)
(4) Moved to avoid wet terrain and possibly immobilize the drilling rig
(5) Moved sampling location closer to the possible contamination source
(6) Moved to avoid disturbing a riparian woodlot
(7) Moved location were a sufficient amount of aqueous sample could be collected
(8) Moved location to include stream's confluence with nearby stream receiving run off from study area
(9) Moved location were a sufficient amount of depositional material could be collected, also paced in location
(10) Moved sampling location down gradient of debris pile

TETRA TECH NUS
FIELD TASK MODIFICATION REQUEST FORM

NSWC CRANE	0279/9060	9060-09
Project/Installation Name	**CTO & Project Number**	**Task Mod. Number**
QAPP/SEC.3.4.2.3	SWMU 16	6-09-03
Modification To (e.g. Work Plan)	**Site/Sample Location**	**Date**

Activity Description: "Cast High Explosives Fill Ground Water Sampling" Five monitoring wells were proposed for installation - However, six monitoring wells were drilled & installed

Reason for Change: Monitoring well 16MWT01 - upon completion of development (4-15-03) and purged (4-21-03) the well was sampled on 4-22-03 but only produced enough water for VOAs and was still dry on 4-23-03.

Recommended Disposition: Because of the extremely slow recharge rate of monitoring well 16MWT01 an additional well (16MWT06) was installed next to 16MWT01. Monitoring well 16MWT06 was installed on 4-24-03 to replace monitoring well 16MWT01. This had to be accomplished quickly to take advantage of the on site HSA track drilling rig - brought onsite to install 13MWT13.

Terry Rogal — 6-09-03

Field Operations Leader (Signature) — **Date**

Approved Disposition:

Ralph Pasinski — 6/10/03

Project/Task Order Manager (Signature) — **Date**

Distribution:

Program/Project File –
Project/Task Order Manager –
Field Operations Leader –

Other: _____

TETRA TECH NUS
FIELD TASK MODIFICATION REQUEST FORM

NSWC CRANE	0279 / N9060	9060-10
Project/Installation Name	CTO & Project Number	Task Mod. Number
QAPP/TABLE 3-2	SWMUs 13 & 16	6-09-03
Modification To (e.g. Work Plan)	Site/Sample Location	Date

Activity Description: TABLE 3-2 showed the Summary of Soil Samples to be collected at SWMUs 13 & 16.

Reason for Change: A shallow REFUSAL occurred at the following soil borings: 13SB14, 16SB03-10, 16SB14-16, 16SB20, 16SB21, 16SB31, 16SB35 and 16SB37. Thus resulting in the collecting of only the surface soils @ the above soil boring locations.

Recommended Disposition: NA

FOR FURTHER INFORMATION SEE the Boring Logs in Appendix A.

Terry Rogal — 06-09-03

Field Operations Leader (Signature) — Date

Approved Disposition:

Ralph Ruemelin — 6/10/03

Project/Task Order Manager (Signature) — Date

Distribution:

Program/Project File –
Project/Task Order Manager –
Field Operations Leader –

Other:

TETRA TECH NUS
FIELD TASK MODIFICATION REQUEST FORM

NSWC CRANE	0279/N9060	9060-11
Project/Installation Name	CTO & Project Number	Task Mod. Number
QAPP/TABLE 3-11	SWMU 16	6-10-03
Modification To (e.g. Work Plan)	Site/Sample Location	Date

Activity Description: TABLE 3-11 SHOWED the Summary of SURFACE Water Samples to be collected @ SWMU 16.

Reason for Change: The only SURFACE WATER locations with a sufficient amount of SURFACE WATER AVAILable FOR Collection occurred @ 16SW01 (North Sump), 16SW02 (East Sump) & 16SW07 (West Sump).

Recommended Disposition: SURFACE WATER @ locations 16SW03-06 WERE NOT collected. Sampling locations 16SW03-06 ranged FROM completely dry to one location with less than ½" OF stagnet WATER FOUND in puts.

Tony Rizzo — 6-10-03

Field Operations Leader (Signature) — Date

Approved Disposition:

Ralph R. Rescuchi — 6/10/03

Project/Task Order Manager (Signature) — Date

Distribution:

Program/Project File –
Project/Task Order Manager –
Field Operations Leader –

Other:

TETRA TECH NUS
FIELD TASK MODIFICATION REQUEST FORM

NSWC CRANE
Project/Installation Name

0279/N9060
CTO & Project Number

9060-12
Task Mod. Number

QAPP/TABLE 3-13
Modification To (e.g. Work Plan)

SWMUs 13 & 16
Site/Sample Location

06-10-03
Date

Activity Description: TABLE 3-13 SHOWED the SUMMARY OF SEDIMENT SAMPLES to be collected @ SWMUs 13 & 16. One EXTRA sediment sample WAS collected @ SWMU 13 & three sediment SUMP SAMPLES WERE NOT collected @ SWMU 16.

Reason for Change: Location 13SD23 WAS added to check the drainage ditch @ the northern portion OF SWMU 13. No sediment WAS found in ANY OF the three sumps (16SD01,02 & 07) @ SWMU 16 AND therefor NOT collected. HOWEVER, A SEDIMENT SAMPLE (16SD02) WAS collected in the DRAINAGE ditch which formerly RECEIVED discharge water from the EAST sump.

Recommended Disposition:
Same AS discussed ABOVE.
REPLACED SUMP SAMPLE 16SD02 with sediment SAMPLE collected FROM AN ADJACENT drainage ditch.

Field Operations Leader (Signature)

06-10-03
Date

Approved Disposition:

Project/Task Order Manager (Signature)

6/10/03
Date

Distribution:

Program/Project File –
Project/Task Order Manager –
Field Operations Leader –

Other:

TETRA TECH NUS
FIELD TASK MODIFICATION REQUEST FORM

NSWC CRANE	0279 / N9060	9060-13
Project/Installation Name	CTO & Project Number	Task Mod. Number
QAPP / SEC. 3.5.12	SWMUS 13 & 16	6-10-03
Modification To (e.g. Work Plan)	Site/Sample Location	Date

Activity Description: Staff Gauge Installation and Estimation of Stream Flow. Ten staff gauges were installed @ SWMU 13. No staff gauges were installed @ SWMU 16 since no surface water flow was observed in any of the drainage ditches during the entire field activity.

Reason for Change: At SWMU 13 stream flow couldn't be physically measured using QAPP SOP CTO 166-21 due to nature of the streams & drainage ditches incountered @ SWMU 13. The physical aspects of the streams & drainage ditches included - heavy grass engroachment, extremely shallow water, rocks, narrow width, etc.

Recommended Disposition:
All staff gauges were associated with culverts and the flow rate was estimated @ each of the 10 culverts selected as staff gauges.
Only one round of staff gauges were taken since the field activities @ SWMU 13 didn't extend into the dry season.

Field Operations Leader (Signature) — Date: 6-10-03

Approved Disposition:

Project/Task Order Manager (Signature) — Date: 6/10/03

Distribution:

Program/Project File –
Project/Task Order Manager –
Field Operations Leader –

Other:

TETRA TECH NUS
FIELD TASK MODIFICATION REQUEST FORM

NSWC CRANE Project/Installation Name	279 9060 CTO & Project Number	9060-14 Task Mod. Number
GAPP/SECT. 3.5.5 Modification To (e.g. Work Plan)	Summit 13+16 Site/Sample Location	6-13-03 Date

Activity Description: PACKER TESTING WAS NOT PERFORMED AT SUMMIT 13 OR SUMMIT 16

Reason for Change: IT WAS FOUND THAT PACKER TESTING WAS NOT NECESSARY SINCE OUR OBJECTIVE WAS TO INSTALL OUR MONITORING WELLS BASED ON FIRST WATER ENCOUNTERED, NOT A HIGH YIELDING ZONE.

Recommended Disposition: ACCEPT MODIFICATION AS NOTED.

Field Operations Leader (Signature) — Date: 6-13-03

Approved Disposition:

Project/Task Order Manager (Signature) — Date: 6/13/03

Distribution:

Program/Project File –
Project/Task Order Manager –
Field Operations Leader –

Other:

APPENDIX C.8.2
SWMU 13 AND SWMU 16
FIELD TASK MODIFICATION REQUEST FORMS
ROUND 2

TETRA TECH NUS
FIELD TASK MODIFICATION REQUEST FORM

NSWC CRANE
Project/Installation Name

0279 / 9060
CTO & Project Number

#1 (Round 2)
Task Mod. Number

QAPP
Modification To (e.g. Work Plan)

SWMU 13 & 16
Site/Sample Location

Date
13GWT3501 - 12/10/03
13GWT4101 - 11/23/03
16GWT0801 - 12/6/03
16GWT1101 - 12/6/03

Activity Description: SEE SECTION 3.5.7 REGARDING "LOW-FLOW SAMPLING OF MONITORING WELLS"

Reason for Change: DUE TO EXTREMELY SLOW RECHARGE RATES THE USE OF BLADDER PUMPS IN SOME DEEP WELLS WAS ABANDONED. SEVERE DRAWDOWN OCCURRED DURING THE PURGE, THUS TAKING HOURS FOR LIFT OF RECHARGE. ADDITIONALLY, WELLS DRIED OUT MANY TIMES DURING SAMPLE COLLECTION - RENDERING BLADDER PUMPS USELESS.

Recommended Disposition: USED DISPOSABLE TEFLON BAILERS TO SAMPLE SELECTED DEEP WELLS (THOSE WITH EXTREMELY SLOW RECHARGE RATES). ADDITIONALLY, MINIMUM SAMPLE VOLUME WAS COLLECTED PER ANALYSIS AND THE PARAMETERS COLLECTED WERE PRIORITIZED.

Tony Royal
Field Operations Leader (Signature)

MARCH 2, 2004
Date

Approved Disposition:

Ralph Russo
Project/Task Order Manager (Signature)

3/2/04
Date

Distribution:

Program/Project File –
Project/Task Order Manager –
Field Operations Leader –

Other:

APPENDIX C.9.1
SWMU 13 AND SWMU 16
EQUIPMENT CALIBRATION LOGS
ROUND 1

Tetra Tech NUS, Inc.

EQUIPMENT CALIBRATION LOG

PROJECT NAME : NSWC CRANE

SITE NAME: SWMU 13 & SMWU 16

PROJECT No.: N9060 CTO 0279

INSTRUMENT NAME/MODEL: PHOTOVAC

MANUFACTURER: U.S. ENVIRONMENTAL

SERIAL NUMBER: ED HK 321

Date of Calibration	Instrument I.D. Number	Person Performing Calibration	Instrument Settings		Instrument Readings		Calibration Standard (Lot No.)	Remarks and Comments
			Pre-calibration	Post-calibration	Pre-calibration	Post-calibration		
3/25/03	ED HK321	B BALKOVEC	0.0	0.0	100.0	100.0	00210-03	
3/26/03	"	"	"	0.0	"	100.0	"	
3/27/03	"	"	"	0.0	"	100.0	"	
3/28/03	"	"	"	0.0	"	100.0	"	
3/29/03	"	"	0.0	0.0	100.0	100.0	"	
3/30/03	"	"	"	0.0	100.0	99.9	"	
3/31/03	"	"	"	0.0	100.0	100.0	"	
4/1/03	"	"	"	0.0	100.0	100.0	"	
4/7/03	"	"	"	0.0	100.0	100.0	"	
4/8/03	"	"	"	0.0	100.0	100.0	"	
4/9/03	"	"	0.0	0.0	100.0	100.0	"	
4/10/03	"	"	0.0	0.0	100.0	99.9	"	
4/11/03	"	"	0.0	0.0	100.0	100.0	"	
4/12/03	"	T. TRUAN	0.0	0.0	100	100	"	
4/13/03	"	B BALKOVEC	0.0	0.0	100	100	"	
4/14/03	"	"	0.0	0.0	100	100	"	
4/15/03	"	"	0.0	0.0	100	100	"	

Tetra Tech NUS, Inc.

EQUIPMENT CALIBRATION LOG

PROJECT NAME : NSWC CRANE

SITE NAME: SWMU 13 & SMWU 16

PROJECT No.: N9060 CTO 0279

INSTRUMENT NAME/MODEL: PHOTOVAC

MANUFACTURER: U.S. ENVIRONMENTAL

SERIAL NUMBER: EO JK 303

Date of Calibration	Instrument I.D. Number	Person Performing Calibration	Instrument Settings		Instrument Readings		Calibration Standard (Lot No.)	Remarks and Comments
			Pre-calibration	Post-calibration	Pre-calibration	Post-calibration		
3/25/03	EO JK303	B PALKOVICS	0.0	0.0	100.0	100.0	00240203	25.0 100.0 ppm
3/26/03	"	"	0.0	0.0	100.0	99.9	"	
3/27/03	"	"	0.0	0.0	100.0	100.0	"	
3/28/03	"	"	0.0	0.0	100.0	100.0	"	

Tetra Tech NUS, Inc.

DOCUMENTATION OF FIELD CALIBRATION

PROJECT NAME : NSWC CRANE

SITE NAME: SWMU 13 & 16

PROJECT No.: N9060 CTO 0279

INSTRUMENT NAME/MODEL: YSI 6920

MANUFACTURER: YSI

SERIAL NUMBER: 01L0707AC

Date of Calibration	Person Performing Calibration	INITIAL CALIBRATION PH	COND	ORP	DO	NA	NA	CALIBRATION CHECK PH	COND	ORP	DO	NA	NA	Calibration Standard (Lot No.)	Remarks and Comments
3/29/03	TR	7.0 4.0	1000 uS/cm	100 mV	CHECK	....	....					....	....	7.0 2600 8/23/03 4.0 2760 8/07/03	1000 Lot 2393 Exp 12/11/ ORP 3119 5/6/03
3/30/03	TR					....	....	OK	OK	OK		....	....		
4/10/03	TR	Re calibrate				....	....					....	....	SAME	Stands & lot #s etc
4/11/03	TR	→				....	....					....	....	→ OK	check Cali.
4/12/03	TR	→				....	....					....	....	→ "	" "
4/13/03	TR	→				....	....					....	....	→ "	" "
4/15/03	TR		CHECK		CAL	i....	Tues. morning		will	cali....		NEXT	....	shift	(OK)
4/21/03	TR	7.0 4.0	1.000 mS/cm	100 mV	8.78 OK	→	....					....	....	7.0 3100 4/22/04 4.0 3129 5/15/04	1mS/cm = 3393 12/1/0 ORP = Same as Above
4/22/03	TR		CHECK		CALI.	....	EVERY	thing	OK	→		....	....	Good	Same solutions As Above
4/23/03	BB		CHECK		CAL.	@	1620		EVERYTHING	O.K.		....	....	"	
4/24/03	TR		"		"	@	1830		"	"		....	....	"	"
4/25/03	TR	→				....	....					....	....	→ "	"
4/26/03	TR	→				....	....					....	....	→ "	"
4/27/03	TR	→				....	....					....	....	→ "	"
4/28/03	TR	→				....	....					....	....	→ "	"
4/29/03	TR	→				....	....					....	....	→ "	"

Tetra Tech NUS, Inc.

DOCUMENTATION OF FIELD CALIBRATION

PROJECT NAME : NSWC CRANE

SITE NAME: SWMU 13 & 16

PROJECT No.: N9060 CTO 0279

INSTRUMENT NAME/MODEL: YSI 6920

MANUFACTURER: YSI

SERIAL NUMBER: 01L0707AC

Date of Calibration	Person Performing Calibration	INITIAL CALIBRATION						CALIBRATION CHECK						Calibration Standard (Lot No.)	Remarks and Comments
		PH	COND	ORP	DO	NA	NA	PH	COND	ORP	DO	NA	NA		
5/6/03	T.R.	7.0 4.0	1000 uS/cm	100 mV		....	....				changed memorand	....	....	7.0 3106 4/22/04 4.0 3129 5/15/04	Ins/cm: 3393 12/8/03 ORP: 3113 5/6/03
5/7/03	T.R					....	....					....	....	Cali.	Check (OK)
5/8/03	BB					....	....					....	....	CAL CHECK	(OK)
5/9/03	B.B					....	....					....	....	CAL CHECK	(OK)
5/11/03	BB					....	....					....	....	CAL CHECK	(OK)
						....	....					....	....		
						....	....					....	....		
						....	....					....	....		
						....	....					....	....		
						....	....					....	....		
						....	....					....	....		
						....	....					....	....		
						....	....					....	....		
						....	....					....	....		
						....	....					....	....		
						....	....					....	....		

Tetra Tech NUS, Inc.

DOCUMENTATION OF FIELD CALIBRATION

PROJECT NAME: NSWC CRANE

SITE NAME: SWMU 13 & 16

PROJECT No.: N9060 CTO 0279

INSTRUMENT NAME/MODEL: YSI 6920

MANUFACTURER: YSI

SERIAL NUMBER: 98H0359AD

Date of Calibration	Person Performing Calibration	INITIAL CALIBRATION PH	COND	ORP	DO	NA	NA	CALIBRATION CHECK PH	COND	ORP	DO	NA	NA	Calibration Standard (Lot No.)	Remarks and Comments
4/21/03	BB	7.0 4.0	1.00 mS/cm	100 mV	8.28 O.K.	----	----					----	----	7.0 3106 4.0 3124	4/22/04 1mS/cm = 3393 5/15/04 ORP = same 12/4/03 AS ABOVE
4/22/03	"	CHECK		CALIBRATION		@	1100	EVERYTHING			O.K	----	----		✓
4/23/03	"	"			"	----	@	1215	"		"	----	----		✓
4/25/03	"	CAL		CHECK @		1648			EVERYTHING		O.K	----	----		✓
4/26/03	"	"		"	@	0750			"		"	----	----		✓
5/6/03	"	7.0 4.0	1.00 mS/cm	100 mV	9.61 O.K.	----	----					----	----	7.0 3106 4.0 3124	4/22/04 1mS/cm = 3393 5/15/04 ORP same 12/4/03
5/7/03	"	CAL		CHECK @		0700	----		O.K.			----	----		
						----	----					----	----		
						----	----					----	----		
						----	----					----	----		
						----	----					----	----		
						----	----					----	----		
						----	----					----	----		
						----	----					----	----		
						----	----					----	----		
						----	----					----	----		

Tetra Tech NUS, Inc.

EQUIPMENT CALIBRATION LOG

PROJECT NAME : NSWC CRANE

SITE NAME: SWMU 13 & SMWU 16

PROJECT No.: N9060 CTO 0279

INSTRUMENT NAME/MODEL: LAMOTTE 20/20

MANUFACTURER: LAMOTTE

SERIAL NUMBER: 3323-2402

Date of Calibration	Instrument I.D. Number	Person Performing Calibration	Instrument Settings		Instrument Readings		Calibration Standard (Lot No.)	Remarks and Comments
			Pre-calibration	Post-calibration	Pre-calibration	Post-calibration		
3/29	SAME	TR	0.0	0.0	0.0	0.0	NA	Standard supplied by
3/30	"	"	0.0	0.0	0.0	0.0	"	U.S. Eng.
4/1	"	"	0.0	0.0	0.0	0.0	"	
4/10	"	"	0.0	0.0	0.0	0.0	"	
4/11	"	"	0.0	0.0	0.0	0.0	"	
4/12	"	"	0.0	0.0	0.0	0.0	"	
4/13	"	"	0.0	0.0	0.0	0.0	"	
4/22	"	"	0.0	0.0	0.0	0.0	"	
4/23	"	"	0.0	0.0	0.0	0.0	"	
4/24	"	"	0.0	0.0	0.0	0.0	"	
4/25	"	"	0.0	0.0	0.0	0.0	"	
4/26	"	"	0.0	0.0	0.0	0.0	"	
4/27	"	"	0.0	0.0	0.0	0.0	"	
4/28	"	"	0.0	0.0	0.0	0.0	"	

Tetra Tech NUS, Inc.

EQUIPMENT CALIBRATION LOG

PROJECT NAME : NSWC CRANE

SITE NAME: SWMU 13 & SMWU 16

PROJECT No.: N9060 CTO 0279

INSTRUMENT NAME/MODEL: LaMotte 2020

MANUFACTURER: LaMotte (U.S Envirom)

SERIAL NUMBER: 3332-2402

Date of Calibration	Instrument I.D. Number	Person Performing Calibration	Instrument Settings		Instrument Readings		Calibration Standard (Lot No.)	Remarks and Comments
			Pre-calibration	Post-calibration	Pre-calibration	Post-calibration		
4/10/03	3332-2402	B. Balkovic	0.0	0.0	10.0	10.0	NA	
4/11/03	"	"	0.0	0.0	10.0	10.0	"	
4/12/03	"	"	0.0	0.0	10.0	10.0	"	
4/13/03	"	"	0.0	0.0	10.0	10.0	"	
4/22/03	"	"	0.0	0.0	10.0	10.0	"	
4/23/03	"	"	0.0	0.0	10.0	10.0	"	
4/24/03	"	"	0.0	0.0	10.0	10.0	"	
4/25/03	"	"	0.0	0.0	10.0	10.0	"	
4/26/03	"	"	0.0	0.0	10.0	10.0	"	
4/27/03	"	"	0.0	0.0	10.0	10.0	"	
4/28/03	"	"	0.0	0.0	10.0	10.0	"	
4/29/03	"	"	0.0	0.0	10.0	10.0	"	
5/6/03	"	"	0.0	0.0	10.0	10.0	"	
5/7/03	"	"	0.0	0.0	10.0	10.0	"	

Tetra Tech NUS, Inc.

EQUIPMENT CALIBRATION LOG

PROJECT NAME : NSWC CRANE

INSTRUMENT NAME/MODEL: 2020 TURBIDITY

SITE NAME: SWMU 13 & SMWU 16

MANUFACTURER: LA MOTTE

PROJECT No.: N9060 CTO 0279

SERIAL NUMBER: 1749-1600

Date of Calibration	Instrument I.D. Number	Person Performing Calibration	Instrument Settings		Instrument Readings		Calibration Standard (Lot No.)	Remarks and Comments
			Pre-calibration	Post-calibration	Pre-calibration	Post-calibration		
5/6/03	1749-1600	TR	0.0	0.0	0.0	0.0	NA	Standard supplied by U.S. ENV.
5/7/03	"	TR	"	"	"	"	"	" " "
5/8/03	"	TR	"	"	"	"	"	" " "
5/9/03	"	TR	"	"	"	"	"	" " "
5/11/03	"	TR	"	"	"	"	"	" " "

APPENDIX C.9.2
SWMU 13 AND SWMU 16
EQUIPMENT CALIBRATION LOGS
ROUND 2

Tetra Tech NUS, Inc.

EQUIPMENT CALIBRATION LOG

PROJECT NAME: NSWC CRANE

SITE NAME: SWMUs 13 &16

PROJECT No.: N9060, CTO 0279

INSTRUMENT NAME/MODEL: PID 2020

MANUFACTURER: Perkin Elmer

SERIAL NUMBER: ED EM 311

Date of Calibration	Instrument I.D. Number	Person Performing Calibration	Instrument Settings		Instrument Readings		Calibration Standard (Lot No.)	Remarks and Comments
			Pre-calibration	Post-calibration	Pre-calibration	Post-calibration		
11.6.03	SAME	TR	—	—	99.4	100	00228.03	OK
11-7-03	"	PWL	—	—	91.8	100	"	OK
11-8-03	"	PWL	—	—	104	100	"	OK
11-9-03	"	PWL	—	—	105	100	"	OK
~~11-10-03~~	~~"~~	~~PWL~~	~~—~~	~~—~~	~~90.5~~	~~100~~	~~"~~	~~OK~~
11-10-03	"	MGL	—	—	94.5	100	"	OK
11-11-03	"	PWL			76.2	100		
11/17/03	"	SAG	—	—	98.5	100	"	OK
11/18/03	"	SG	—	—	104	100	"	OK
11/24/03	"	SG	—	—	98.5	100	"	OK
11/20/03	"	SG	—	—	88.9	100	"	OK
12/4/03	"	SG			96.4	100	"	OK
12/5/03	"	SG			98.9	100	"	OK
12/6/03	"	SG	—	—	98.5	100	"	OK
12/7/03	"	SG	—	—	96.0	100	"	OK

Tetra Tech NUS, Inc.

EQUIPMENT CALIBRATION LOG

PROJECT NAME : NSWC CRANE

SITE NAME: SWMUs 13 &16

PROJECT No.: N9060, CTO 0279

INSTRUMENT NAME/MODEL: PHOTOVAC

MANUFACTURER: PERKIN ELMER

SERIAL NUMBER: ED MF 352

Date of Calibration	Instrument I.D. Number	Person Performing Calibration	Instrument Settings		Instrument Readings		Calibration Standard (Lot No.)	Remarks and Comments
			Pre-calibration	Post-calibration	Pre-calibration	Post-calibration		
10/25/03	same	TR	–	–	94.8	100	00-28-03	OK
10/27/03	ED MF352	PWR	–	–	98.2	100	"	OK
11/3/03	"	MG	–	–	98.4	100	"	OK
11/4/03	"							
11/5/03	"	TR	–	–	97.6	100	"	OK
11/10/03	"	PWR			90.5	100	"	OK
11/11/03	"	PWR			90.5	100		
11/[illegible]/03	"	MGC	–	–	98.5	100	"	OK
~~11/19/03~~	~~"~~	~~MGC~~						

Tetra Tech NUS, Inc.

EQUIPMENT CALIBRATION LOG

PROJECT NAME : NSWC CRANE

SITE NAME: SWMUs 13 &16

PROJECT No.: N9060, CTO 0279

INSTRUMENT NAME/MODEL: PHOTOVAC PID

MANUFACTURER: PERKIN ELMER

SERIAL NUMBER: ED ~~MF 352~~ HE 339

Date of Calibration	Instrument I.D. Number	Person Performing Calibration	Instrument Settings		Instrument Readings		Calibration Standard (Lot No.)	Remarks and Comments
			Pre-calibration	Post-calibration	Pre-calibration	Post-calibration		
10-21-03	EDMF352	FURAMSER	—	—	86.1	99.8	00228-03	
10-23-03	EDMF352	FUR	—	—	107	100	"	
10-24-03	EDHE339	FUR			105	100	"	
10-25-03	EDHE339	FUR			95.3	100	"	
10-26-03	EDHE339	FUR			102	100	"	
11-4-03	ED HE339	FUR			105	100	"	
11-5-03	"	TR	—	—	101	100	"	
11-6-03	"	TR	—	—	99.8	100	"	
11-7-03		[illegible]	—	—	99.8	100	"	
11-8-03	"	FUR			9.1	100		
11-17-03	"	[illegible]	—	—	5.6	100	"	
11-19-03	"	[illegible]	—	—	99.0	100	"	

Tetra Tech NUS, Inc.

EQUIPMENT CALIBRATION LOG

PROJECT NAME : NSWC CRANE

SITE NAME: SWMUs 13 &16

PROJECT No.: N9060, CTO 0279

INSTRUMENT NAME/MODEL: LAMotte

MANUFACTURER: LAMotte

SERIAL NUMBER: 0920 4298

Date of Calibration	Instrument I.D. Number	Person Performing Calibration	Instrument Settings		Instrument Readings		Calibration Standard (Lot No.)	Remarks and Comments
			Pre-calibration	Post-calibration	Pre-calibration	Post-calibration		
10/21/03	SAME	FW	0.0	0.0	0.0	0.0	NA-PROVIDED BY US ENV.	CHECKED 10 STAND.
10/22/03	SAME	"	0.0	0.0	0.0	0.0	"	CHECKED 10 Stand.
10/24/03	SAME	"	0.0	0.0	0.0	0.0	"	"
10/25/03	SAME	"	0.0	0.0	0.0	0.0	"	"
10/26/03	SAME	"	0.0	0.0	0.0	0.0	"	"
10/27/03	SAME	MGC	~~1.38~~ 0.09	0.0	.09	0.0	"	"
11/5/03	"	TR	—	—	0.0	0.0	"	"
11/6/03	"	TR	—	—	0.0	0.0	"	"
11/7/03	"	TR	—	—	0.0	0.0	"	"
11/8/03	"	FW	—	—	0.0	0.0	"	"
11/9/03	"	FW	—	—	0.0	0.0	"	"
11/10/03	"	TR	—	—	0.0	0.0	"	"
11/11/03	"	FW	—	—	0.0	0.0	"	"
11/18/03	"	QD	—	—	0.0	0.0	"	"
11/19/03	"	QD	—	—	0.0	0.0	"	"
11/20/03	"	QD	—	—	0.0	0.0	"	"
11/21/03	"	QD	—	—	0.0	0.0	"	"
11/21/03	"	QD	—	—	0.0	0.0	"	"
11/22/03	"	QD	—	—	0.0	0.0	"	"
11/23/03	"	QD	—	—	0.0	0.0	"	"
11/24/03	"	TR	—	—	0.0	0.0	"	"
11/25/03	"	TR	—	—	0.0	0.0	"	"
12/4/03	"	QD	0	0	0	0	"	"
12/6/03	"	TR	0.0	0.0	0.0	0.0	"	"
12/7/03	"	TR	0.0	0.0	0.0	0.0	"	"

Tetra Tech NUS, Inc.

EQUIPMENT CALIBRATION LOG

PROJECT NAME : NSWC CRANE

SITE NAME: SWMUs 13 &16

PROJECT No.: N9060, CTO 0279

INSTRUMENT NAME/MODEL: LaMotte 2020

MANUFACTURER: LaMotte

SERIAL NUMBER: 3317-2402

Date of Calibration	Instrument I.D. Number	Person Performing Calibration	Instrument Settings		Instrument Readings		Calibration Standard (Lot No.)	Remarks and Comments
			Pre-calibration	Post-calibration	Pre-calibration	Post-calibration		
10/25/03	SAME	TK	0.00	0.00	0.00	0.00	NA - provided by U.S. ENV.	OK → 10 MTH CHECK
10/26/03	SAME	MGC	0.00	0.00	0.00	0.00	"	" "
10/27/03	SAME	MGC	0.00	0.00	0.00	0.00	"	" "
10/28/03	SAME	MGC	0.00	0.00	0.00	0.00	"	" "
11/4/03	"	TK	—	—	0.00	0.00	"	" "
11/5/03	"	TK	—	—	0.00	0.00	"	" "
11/6/03	"	TK	—	—	0.00	0.00	"	" "
11/7/03	"	TK	—	—	0.00	0.00	"	" "
11/8/03	"	FW	—	—	0.0	0.0	"	" "
11/9/03	"	FW	—	—	0.0	0.0	"	" "
11/10/03	"	TK	—	—	0.0	0.0	"	" "
11/11/03	"	FW	—	—	0.0	0.0	"	" "
11/18/03	"	TK	—	—	0.0	0.0	"	" "
11/19/03	"	TK	—	—	0.0	0.0	"	" "
11/20/03	"	[illegible]	—	—	0.0	0.0	"	" "
11/21/03	"	[illegible]	—	—	0.0	0.0	"	" "
11/21/03	"	[illegible]	—	—	0.0	0.0	"	" "
11/22/03	"	[illegible]	—	—	0.0	0.0	"	" "
11/23/03	"	[illegible]	—	—	0.0	0.0	"	" "
11/24/03	"	[illegible]	—	—	0.0	0.0	"	" "
11/25/03	"	[illegible]	—	—	0.0	0.0	"	" "
12/4/03	"	[illegible]	—	—	0	0	"	" "
12/5/03	"	[illegible]	—	—	0	0	"	" "
12/6/03	"	[illegible]	—	—	0	0	"	" "
12/7/03	"	[illegible]	—	—	0	0	"	" "
12/8/03	"	[illegible]	—	—	0	0	"	" "
12/9/03	"	[illegible]	—	—	0	0	"	" "

Tetra Tech NUS, Inc.

EQUIPMENT CALIBRATION LOG

PROJECT NAME : NSWC CRANE

SITE NAME: SWMUs 13 &16

PROJECT No.: N9060, CTO 0279

INSTRUMENT NAME/MODEL: LA MOTTE / TURBIDMETER

MANUFACTURER: LA MOTTE

SERIAL NUMBER: 3106-1402

Date of Calibration	Instrument I.D. Number	Person Performing Calibration	Instrument Settings		Instrument Readings		Calibration Standard (Lot No.)	Remarks and Comments
			Pre-calibration	Post-calibration	Pre-calibration	Post-calibration		
11/17/03	3106-1402	S. GRIER	0 —	—	0, 9.5	0, 10	N/A	
11/18/03	" "	" "			0, 9.8	0, 10	"	
11/19/03	" "	" "			0, 10.5	0, 10	"	
11/20/03	" "	" "			0, 9.6	0, 10	"	
11/21/03	" "	" "			0, 8.9	0, 10	"	
11/22/03	" "	" "			0, 9.6	0, 10	"	
11/23/03	" "	" "			0, 8.9	0, 10	"	
11/24/03	" "	" "			0, 9.6	0, 10	"	
11/25/03	" "	" "			0, 9.1	0, 10	"	
12/4/03	"	QPS	0	0	0	0.0, 10	"	
12/5/03	"	S.G			0.0, 9.9	0.0, 10	"	
12/6/03	"	S.G			0.0, 9.9	0.0, 10	"	

Tetra Tech NUS, Inc.

DOCUMENTATION OF FIELD CALIBRATION

PROJECT NAME : NSWC CRANE

SITE NAME: SWMUs 13 & 16

PROJECT No.: N9060, CTO 0279

INSTRUMENT NAME/MODEL: YSI

MANUFACTURER: YSI

SERIAL NUMBER: 02B0141

Date of Calibration	Person Performing Calibration	INITIAL READINGS PH	COND	TURB	DO % mg/L	TEMP	FINAL READINGS PH	COND	TURB	DO	TEMP	Calibration Standard (Lot No.)	Remarks and Comments
11/20/03	S GRIER	7.15 3.88	937	N/A	~~N/A~~	N/A	7.00 4.00	1000.0	N/A	~~N/A~~	N/A	pH 7 - 3106 pH 4 - 3129	ORP 237 @ 18.0 (ok)
11/20/03	S. GRIER				88.7% 8.30 mg/L					97.9% 9.15 mg/L		SC - 3393 ORP - 0301385	
11/21/03	S. GRIER	7.03 4.00	911.0		100.6% 8.59			1000.0					
11/22/03	S. GRIER	7.00 4.11	940.0		98.9% 8.63	N/A	7.13 4.04	1000					
11/24/03	QD	7.00 3.97	1035					1001					234.7 @ 18.0 (ok)
11/25/03	S. GRIER	6.83 4.02	1018		98.6% 8.60		7.01 4.02	1000					
12/3/03	QD	7.07 3.98	1080		98.6% 8.62		7.00 4.00	1002		102.2 9.17			234.7 @ 18.0 234.7 @ 18.0 (ok)
12/4/03	SG	7.06 3.99	1004										
12/5/03	SG	7.28 4.09	1.006		100% 8.70		7.09 4.01	1.006					ORP 236.5 @ 16.80 (ok)
12/6/03	SG	7.09 4.06	0.980		—		7.09 4.06	0.980		—			ORP 235.0 @ 17.76 (ok)
12/7/03	QD	7.02 4.01	1.001		—		—	—		—			OK 237.7 @ 19.7 (ok)
12/9/03	SG	7.24 4.16	998.0				7.29 4.16	998.0					234 @ 18.0

Tetra Tech NUS, Inc.

DOCUMENTATION OF FIELD CALIBRATION

PROJECT NAME : NSWC CRANE

SITE NAME: SWMUs 13 & 16

PROJECT No.: N9060, CTO 0279

INSTRUMENT NAME/MODEL: YSI

MANUFACTURER: YSI

SERIAL NUMBER: 99B1412

Date of Calibration	Person Performing Calibration	INITIAL READINGS PH	COND	TURB	DO	TEMP		FINAL READINGS PH	COND	TURB	DO	TEMP	Calibration Standard (Lot No.)	Remarks and Comments
11/22/03	QS	6.96 4.07	958	NA	–	–		–	–	NA	–	–	PH7 3106 PH4 3129	ORP 233 @ 18.0 (ok)
11/23/03	QS	7.00 4.06	1020	NA	–	–		–	1000	NA	–	–	SC 3393 ORP 0351385	ORP 278.2 @ 18° 237.5 @ 18° (ok)
11/24/03	QS	7.04 4.15	937	NA	–	–		4.00	1000	NA	–	–	"	175.3 @ 17 279.0 @ 17
11/25/03	QS	6.87 4.47	1111	NA	–	–		2.00 4.00	1000	NA	–	–	"	310 @ 17° 236.4 @ 17° (ok)
12/3/03	QS	6.99 4.04	962	NA	160 @ 16.04	–		6.99 4.00	1.001	NA	98.5 9.2	–	"	273.4 @ 17° 237.5 @ 17° (ok)
12/5/03	QS	6.97 3.88	1.02	NA	–	–		7.00 4.00		NA	–	–	"	236.5 @ 17.12° (ok)
12/6/03	QS	2.03 3.97	1.052					–	1.052	NA	–	–	"	ORP 240.6 @ 16.10 (ok)
12/7/03	—	–	–					–	–		–		→	Not used on 12/6/03
12/8/03	QS													

Tetra Tech NUS, Inc.

DOCUMENTATION OF FIELD CALIBRATION

PROJECT NAME : NSWC CRANE

SITE NAME: SWMUs 13 & 16

PROJECT No.: N9060, CTO 0279

INSTRUMENT NAME/MODEL: YSI

MANUFACTURER: YSI

SERIAL NUMBER: 78F0478AB

Date of Calibration	Person Performing Calibration	INITIAL READINGS PH	COND	TURB	DO	TEMP		FINAL READINGS PH	COND	TURB	DO	TEMP	Calibration Standard (Lot No.)	Remarks and Comments	
11/10/03	TR	7.41 3.63	1045	NA	—	—		7.00 4.00	1000	NA	—	—	PH 7 3106 PH4 3129	ORP 243 @ 16.15°C	(ok
11/11/03	TR	7.01 4.04	944	NA	—	—		—	1000	NA	—	—	SC 3393 ORP 0321355	242 @ 17.8	(ok
11/12/03	QD	7.08 3.97	1001	NA	114.8 @ 10.81	—		7.00 4.00	1000	NA	97.9 9.25	—		237 @ 18.5	(ok)
11/19/03	QD	7.08 4.04	987	NA	—	—		—	—	NA	—	—		236 @ 17.8	(ok)
11/20/03	QD	7.06 4.08	972	NA	—	—		—	—	N/A	—	—		237 @ 16.3	(ok)
11/21/03	QD	7.02 4.02	943	NA	—	—		—	—	NA	—	—		~~237 @ 18.0~~ 236 @ 17.9	(ok) (ok)
11/22/03	QD	7.07 4.00	~~938~~ 904	NA	—	—		—	1000	NA	—	—		236 @ 17.5	(ok)
11/23/03	QD	7.03 4.03	1025	NA	—	—		—	1000	NA	—	—		~~278.2 @ 18.5~~ 237.9 @ 18.5	(ok)
11/24/03	QD	7.01 4.04	.939	NA	—	—			1.015	NA	—	—		237.9 @ 17.8	(ok)
11/25/03	QD	7.06 3.98	977	NA	—	—			1.001	NA	—	—		ORP 235.4 @ 17	ok
12/3/03	QD	6.70 4.07	.994	NA	85.3 9.24	—		7.00 4.00	1.001	NA	98.6 9.33	—		233.9 @ 17 237.5 @ 17	ok
12/6/03	SG	6.99 4.03	1.040		—			6.99 4.03	1040	NA	—			264.8 @ 15.60°C	ok
12/7/03	QD	7.02 4.01	1.012		—			—	—	NA	—	—		237.0 @ 19.0	(ok)
12/8/03	QD	7.03 4.02	.962		—			—	1.000		—			239.3 237.5 @ 17.8	(ok)
12/9/03	QD	7.07 4.00	.874					—	1.002		—			235.7 @ 18.0	(ok)

Tetra Tech NUS, Inc.

DOCUMENTATION OF FIELD CALIBRATION

PROJECT NAME : NSWC CRANE

SITE NAME: SWMUs 13 & 16

PROJECT No.: N9060, CTO 0279

INSTRUMENT NAME/MODEL: YSI

MANUFACTURER: YSI

SERIAL NUMBER: 9981412

Date of Calibration	Person Performing Calibration	INITIAL READINGS PH	COND	TURB	DO	TEMP		FINAL READINGS PH	COND	TURB	DO	TEMP	Calibration Standard (Lot No.)	Remarks and Comments	
10/25/03	TR	7.13	0.984	NA	98.2	–		7.00 ~~4.00~~	1000	NA	100%	–	PH 7 = 3106 PH 4 = 3129	ORP CHECK = 231.7 @ 18.18°C	(OK)
10/26/03	TR	3.91 7.13 3.90	0975	NA	98.4	–		7.00 4.00	1000	NA	100%	–	SC = 3393 ORP = 03J1385	242 @ 16.96	(OK)
10/27/03	TR	7.01 4.01	1002	NA	–	–		NA	1000	NA	–	–		247 @ 17.83	(OK)
10/28/03	TR	6.98 4.01	1063	NA	–	–		NA	1000	NA	–	–		236 @ 18.03	(OK)
11/03/03	TR	7.03 3.96	1075	NA	99.1% 8.71 mg/L	–		7.00 4.00	1000	NA	98.0% 8.61 mg/L	–		234 @ 19.81	(OK)
11/5/03	TR	6.99 4.02	1026	NA	–	–		–	1000	NA	–	–		238 @ 19.00	(OK)
11/6/03	TR	6.99 4.02	937	NA	–	–		–	1000	NA	–	–		240 @ 19.26	(OK)
11/7/03	TR	7.00 4.04	1006	NA	–	–		–	–	NA	–	–		244 @ 16.09	(OK)
11/8/03	TR	4.04	985	NA	–	–		–	–	NA	–	–		243 @ 19.60	(OK)
11/9/03	FW	7.05 4.06	1008	NA	–	–		–	–	NA	–	–		ORP ~~5.02~~ 15.02 ORP Calib = 237 @ 19.5°C	(OK)
11/10/03	TR	7.03 4.09	1015	NA	–	–		–	1000	NA ~~1000~~ TR	– ~~NA~~	–		237 @ 16.16°C	(OK)
11/11/03	TR	7.06 4.08	996	NA	–	–		–	–	NA	–	–		235 @ 18.0	(OK)
11/17/03	TR	7.08 4.07	974	NA	75.0% 6.8 mg/L	–		7.00 4.00	1000	NA	97.8% 9.00 mg/L	–		237 @ 19.00	(OK)
11/19/03	TR	7.00 4.06	1015	NA	–	–		–	–	NA	–	–		237 @ 15.30	(OK)
11/20/03	QD	7.02 4.06	968	NA	–	–		–	–	NA	–	–		237 @ 18.00	(OK)
11/21/03	QD	6.98 4.04	964	NA	–	–		–	–	NA	–	–		234 @ 18.01	(OK)

Tetra Tech NUS, Inc.

DOCUMENTATION OF FIELD CALIBRATION

PROJECT NAME : NSWC CRANE

SITE NAME: SWMUs 13 & 16

PROJECT No.: N9060, CTO 0279

INSTRUMENT NAME/MODEL: YSI 650 MDS w/600XL SONDE

MANUFACTURER: YSI 02G1124 AH

SERIAL NUMBER: 98F0478AB

Date of Calibration	Person Performing Calibration	INITIAL READINGS PH	COND	TURB	DO	TEMP	FINAL READINGS PH	COND	TURB	DO	TEMP	Calibration Standard (Lot No.)	Remarks and Comments
10-21-03	FWR	4.05					4.00					pH 7 = 3106 pH 4 = 3129	Inst. Not Used This Date
↓	↓	7.16	982	—	95.6%	—	7.00	1000	—	96%	—	SC = 3393 ORP = 03.11385	↓
10-22-03	TK				9.93 mg/L					9.93 mg/L			
10-23-03	FCW	7.00/ ~~1000~~ FCW		—			~~1000~~ FCW	1000	—				ORP CHECK 245 mV RECAL. COND. ORP 232.3 @ 18.55°C
↓		4.00	988										
10/24/03		7.02	959					1000					ORP 230 @ 17.45°C
↓		4.08	1010										ORP 231.5 @ 17.38
10/25/03		7.06 4.10											
10/26/03		7.07 4.06	990							9.50 mg/L			ORP 333.6 @ 16.16°C 334 @ 18.37
10/27/03		7.06 4.06	966					1000					↓ ORP 334 @ 18.3°C
10/27/03	(NOT IN USE CAL OK)												
10/28/03		↓											
11/3/03	FCW	~~7.19~~ FCW	1.189	—	90.6% 8.03 mg/L	—	~~7.00~~ FCW	1.000	—	97.9% 8.56 mg/L	—	ORP	Ph probe broke Will recal. on 11/4/03
11/4/03	FCW	6.19 4.34					7.00/4.00					ORP 237.5 @ 20.32°C	NEW ph probe
11/6/03	FCW	7.11 3.71	0.938	—	—	—							ORP 242.8 @ 18.57
11/7/03	FCW	7.10 3.15	09.23				4.00	1.000					ORP 246.5 @ 14.43
11/8/03	FCW	7.35 3.63	1.050				7.00 4.00					ORP 243.6 @ 15.79°C	
11/9/03		7.37 3.62	1.017				7.00 4.00					ORP 246.7 @ 15.0°C	