DEPARTMENT OF THE NAVY
CRANE DIVISION
NAVAL SURFACE WARFARE CENTER
300 HIGHWAY 361
CRANE, INDIANA 47522-5001

N00164.AR.000889
NSWC CRANE
5090.3a

IN REPLY REFER TO:
5090/S4.7.1
Ser RP3/4309
14 OCT 2004

Indiana Department of Environmental Management
Corrective Action Section
Office Of Land Quality
Hazardous Waste Permits
100 N Senate Ave
PO Box 6015
Indianapolis, In 46206-6015

Dear Mr. Griffin:

Crane Division, Naval Surface Warfare Center submits, for review and comment, the Preliminary Assessment for the Military Munitions Response Program (MMRP) ranges as enclosure (1). This report is being submitted as a draft version. Enclosure (2) contains the Site Recommendations for the ranges. The permit required Certification Statement is provided as enclosure (3).

If you require any further information, my point of contact is Mr. Thomas J. Brent, Code RP3-TB, at 812-854-6160, email thomas.brent@navy.mil.

Sincerely,

JAMES M. HUNSICKER
Manager, Environmental Protection
By direction of the Commanding Officer

Enclosures: 1. Draft MMRP Preliminary Assessment Report
2. Site Assessment
3. Certification Statement

Copy to:
ADMINISTRATIVE RECORD
SOUTHNAVFACENGCOM (Code ES31) (w/o encl)
USEPA (Pete Ramanauskas)

DRAFT

MMRP PA

SITE RECOMMENDATIONS

ENCLOSURE (2)

SITE RECOMMENDATIONS

NSWC Crane, Indiana

The following recommendations are made for the B-143 Drop Test, B-2044 Drop Tower/Test Rail, B-2930 Process Control Area, Pyro Areas Outside Test Burn Pad, and Test Pads on Hill Behind B-198, located at Naval Surface Warfare Center Crane Division (NSWC Crane), Indiana. The recommendations are based on data presented in the Revised Draft Final Preliminary Assessment (PA) dated July 2004, prepared by Malcolm Pirnie, Inc. If additional data are discovered, the recommendations should be reviewed and updated appropriately. Recommendations are presented for munitions and explosives of concern (MEC) and munitions constituents (MC) for the five sites.

B-143 Drop Test

Data Summary

The history of the B-143 Drop Test dates from 1968 to 1980. The site was used for testing MK 118 Mod 0 Rockeye Bomblets from the former drop tower. Although ordnance was tested on the site, there is no physical evidence to support MEC presence at the B-143 Drop Test. It was Navy policy at the time to remove all retrievable MEC debris from the test pad after testing. However, no records were found to document removals of MEC from the site. Potential MC associated with the types of munitions known to have been used at the B-143 Drop Test include minimal amounts of heavy metals, lead azide, tetryl, Composition B, and Octol. MC are not anticipated to be present at the site due to the minimal amounts of MC associated with the munitions, because the concrete pad was removed from the site, and because debris containing MC was removed from the site according to clean up procedures. However, there has been no environmental sampling performed at the site.

Recommendations

Based on the data collected and presented in this PA, No Further Action (NFA) is recommended at the B-143 Drop Test with respect to MEC and MC. Since the Rockeye Bomblets were dropped on a concrete pad, it is not expected that they penetrated the soil. Additionally, it was Navy policy at the time to remove all retrievable MEC debris after testing. The potential for MC at the site is limited because the concrete pad was removed from the site and MC would have been concentrated on the concrete pad.

	B-143 Drop Test	
Options	**MEC**	**MC**
No Further Action	X	X
Site Inspection		
Remedial Investigation		
Removal Action		

B-2044 Drop Tower/Test Rail

Data Summary

The history of the B-2044 Drop Tower/Test Area dates from 1951 to 1972. The site was used for testing 20mm cartridges, cartridge actuated devices (CADS), and propellant actuated devices (PADs). Although ordnance testing was performed at the site, there is no evidence to support MEC presence at the B-2044 Drop Tower/Test Rail. According to Mr. Phil Keith, the drop tests were tested one item at a time. It was Navy policy at the time to remove all retrievable MEC debris after testing. However, no records were found to document removals of materials at the site. Potential MC associated with the type of munitions assumed to have been test may included a combination of various chemical used as filler and black powder. There has been no environmental sampling performed at the site.

Recommendations

Based on the data collected and presented in this PA, NFA is recommended for both MEC and MC at the B-2044 Drop Tower/Test Rail. With respect to MEC, no physical evidence was observed to indicate MEC remains at the site. It is unlikely that MEC would remain at the site due to Navy policy at the time to remove all retrievable MEC debris after each testing. Based on information from Mr. Phil Keith that the drop tests were tested one item at a time, MC are not anticipated to remain at the site due to the minimum amount of MC associate with the test items.

	B-2044 Drop Tower/Test Rail	
Options	**MEC**	**MC**
No Further Action	X	X
Site Inspection		
Remedial Investigation		
Removal Action		

B-2930 Process Control Area

Data Summary

The B-2930 Process Control Area was used from 1963 through 1968 for testing various pyrotechnics such as flares, ignition devices, smoke markers, signals, and screening smokes. From 1965 to 1970, the MK 58 red phosphorus candles made on the pyrotechnic line were tested in an area north of Building 2940 and Building 2930. Potential MC associated with the type of munitions known to have been used at this site included red phosphorus, white phosphorus, and perchlorate. No physical evidence was found indicating MEC at the B-2930 Process Control Area. Navy policy at the time would not have permitted the disposal of munitions near the pyrotechnics development buildings, so the potential for MEC at the site is very low. Building 2930 and an asphalt parking lot were constructed over the test site. There has been no environmental sampling performed at the site.

Recommendations

Based on the data collected and presented in this PA, NFA is recommended at the B-2930 Process Control Area with respect to MEC and MC. No physical evidence was observed to indicate MEC remains at the site, and Building 2930 and an asphalt parking lot cover the former test site preventing access by receptors. With respect to MC, it is unlikely that MC would remain at the site. During the construction of Building 2930 and the adjacent parking lot, any potential MC in the surface soil would have been displaced by construction procedures including grading and excavation.

	B-2930 Process Control Area	
Options	**MEC**	**MC**
No Further Action	X	X
Site Inspection		
Remedial Investigation		
Removal Action		

<u>Pyro Area Outside Test Burn Pad</u>

Data Summary

The history of the Pyro Area Outside Test Burn Pad indicates its use for testing of various pyrotechnics (i.e. flares, signals, smoking screens, etc.) from 1984 through 1985. No evidence of MEC was observed at the Pyro Area Outside Test Burn Pad; however, the concrete testing basins observed were in poor condition indicating that testing may have occurred inside the basins. It was Navy policy at the time to remove ordnance and related debris immediately after testing.

Potential MC associated with the types of munitions known to have been used at the site include a combination of various chemicals contained in burning-type colored smoke munitions and explosive-type colored smoke munitions. Some chemicals used in typical smoke compositions include zinc oxide, sulfur, sodium hydrogen carbonate, sodium chloride, and potassium chlorate. There has been no environmental sampling performed at the site.

Recommendations

A site inspection (SI) with confirmation sampling for both MEC and MC is recommended at the Pyro Area Outside Test Burn Pad. Confirmational sampling to support the decision for either NFA or characterization could provide a better degree of confidence to support this decision. In addition, if the bottoms of the basins are not concrete or if the concrete is damaged, geophysical sampling should be performed to determine the potential for buried MEC at the site. The greatest potential for MEC would be inside the two concrete testing basins. Further investigation will provide the necessary information to further decide the extent, type and location of MC contamination. Sampling should include the area immediately surrounding the concrete testing basins, and if the bottoms of the basins are either not concrete or if the concrete is damaged, sampling should be performed below the bottom of the basins where contamination is expected to be at is highest concentration. If intrusive activities are planned for the site, the potential receptors should be made aware that the site is a former munitions test site.

	Pyro Area Outside Test Burn Pad	
Options	**MEC**	**MC**
No Further Action		
Site Inspection	X	X
Remedial Investigation		
Removal Action		

<u>Test Pads on Hill Behind B-198</u>

Data Summary

The history of the Test Pads on Hill Behind B-198 indicates its use for testing of newly developed 2.75-inch rocket warheads, smoke filled and M18 smoke grenades from 1983 through 1985. No evidence of MEC was observed at the Test Pads on Hill Behind B-198, and documentation was identified that described testing activities. It was Navy policy at the time to remove all retrievable MEC debris after testing. Testing procedure indicated that sand was brought to the site and should be removed after testing was completed. No records were found to document

MEC, MC or sand removals, and sand was identified at the site during the site visit. Perforated plastic pipes were buried around the circular testing pads for drainage purposes. Potential MC associated with the types of munitions known to have been used at the site include TNT, baratol, C-4, and other non-explosives materials such as fluorescent dye, solvent 33 yellow dye, and methyl-amino- anthraquinone. In addition to these listed MC, other chemicals may have been used in the experimental testing that included items such as metals, 1,2-napthaquinone, antimony oxide, citric acid, dextrin, lead nitrate, and vanadium pentoxide. There has been no environmental sampling performed at the site

Recommendations

Based on the data collected and presented in this PA, a SI with confirmation sampling for both MEC and MC is recommended at the Test Pads on Hill Behind B-198. The potential for MEC would be in areas inside and around the circular test pads. Confirmational sampling to support the decision for either NFA or characterization with respect to MEC could provide a better degree of confidence to support this decision. Further MC investigation is recommended to provide the necessary information to decide the extent, type and location of MC contamination. Sampling should include the area surrounding the identified plastic drainage piping and the concrete holding tank where MC contamination is expected to be at is highest concentration. Confirmational sampling to support the decision for either NFA or additional characterization could provide a better degree of confidence to support this assumption. If site restoration is planned for the site, the potential receptors should be made aware that the site is a former test site.

	Test Pads on Hill Behind B-198	
Options	**MEC**	**MC**
No Further Action		
Site Inspection	X	X
Remedial Investigation		
Removal Action		

I certify under penalty of law that this document and all attachments were prepared under my direction or supervision in accordance with a system designed to assure that qualified personnel properly gather and evaluate the information submitted. Based on my inquiry of the person or persons who manage the system, or those persons directly responsible for gathering the information, the information submitted is, to the best of my knowledge and belief, true, accurate, and complete. I am aware that there are significant penalties for submitting false information, including the possibility of fine and imprisonment for knowing violations.

SIGNATURE

Manager, Environmental Protection
TITLE

10/13/04
DATE

REVISED DRAFT FINAL

Preliminary Assessment Naval Surface Warfare Center Crane Division, Indiana

MALCOLM PIRNIE

September 2004

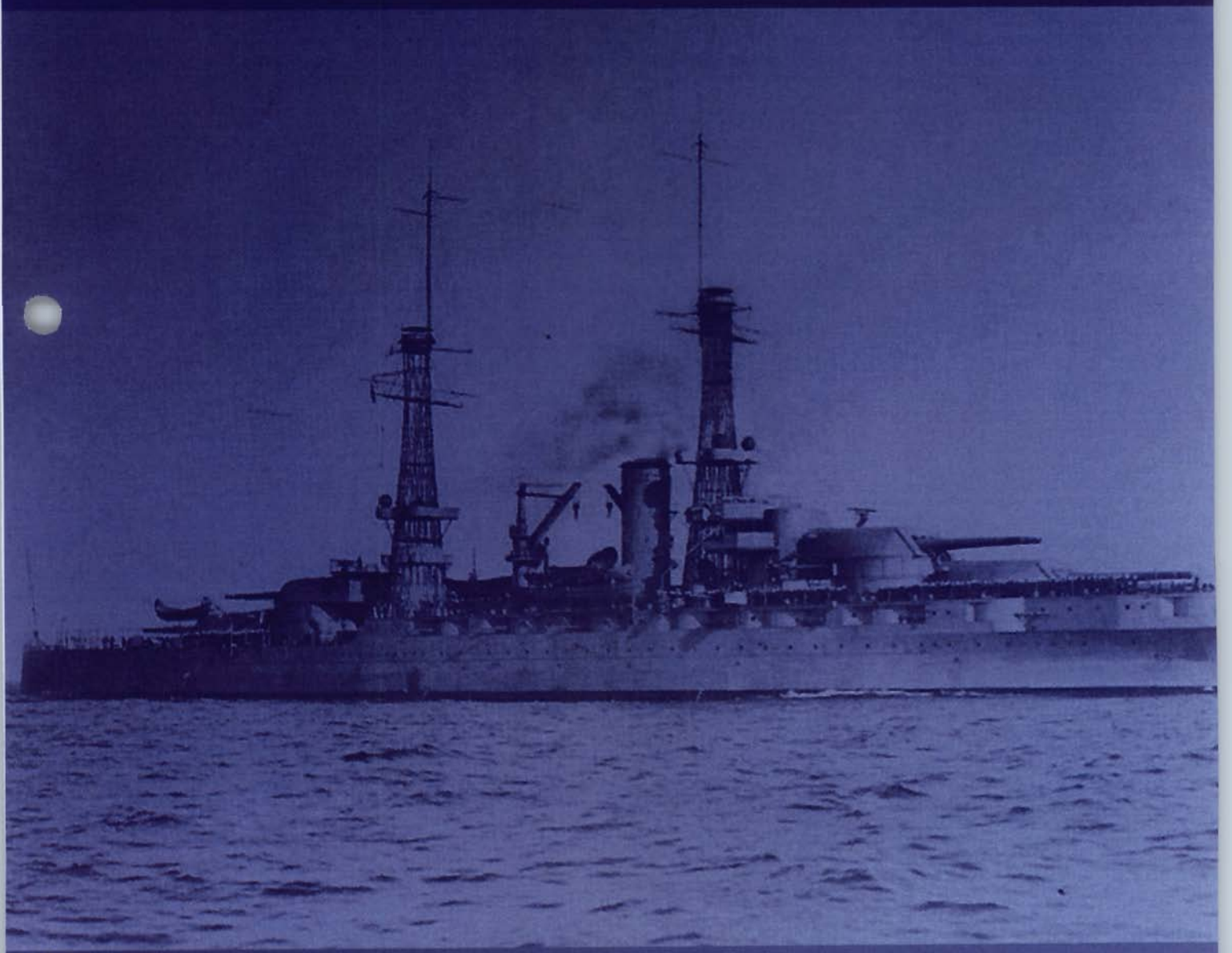

REVISED DRAFT FINAL
PRELIMINARY ASSESSMENT
NAVAL SURFACE WARFARE CENTER
CRANE DIVISION, INDIANA

September 2004

Prepared for:

Naval Surface Warfare Center
Crane Division
Naval Facilities Engineering Command
300 Highway 361
Building 3260
Code 095
Crane, Indiana 47522-5001

Prepared by:

MALCOLM PIRNIE, INC.
300 East Lombard Street, Suite 610
Baltimore, Maryland 21202

REVISED DRAFT FINAL
PRELIMINARY ASSESSMENT
NAVAL SURFACE WARFARE CENTER
CRANE DIVISION, INDIANA

DoD Contract Number: N62472-02-D-1300

Reviewed and Approved by:

_____ Jeffrey R. Bennett, P.E., DEE
Program Officer
Malcolm Pirnie, Inc.

_____ Hien Dinh
Team Leader
Malcolm Pirnie, Inc.

Malcolm Pirnie, Inc. prepared this report at the direction of Engineering Field Activity Northeast. This document should be used only with the approval of the Engineering Field Activity Northeast. This report is based, in part, on information provided in other documents and is subject to the limitations and qualifications presented in the referenced documents.

September 2004

TABLE OF CONTENTS

ACRONYMS I

GLOSSARY OF TERMS III

EXECUTIVE SUMMARY ES-1

1. INTRODUCTION 1-1

1.1. PURPOSE 1-2
1.2. PROGRAMMATIC FRAMEWORK 1-2
1.3. PROJECT MANAGEMENT 1-4
1.4. PRELIMINARY ASSESSMENT APPROACH 1-4

2. INSTALLATION BACKGROUND 2-1

2.1. LOCATION AND SETTING 2-1
2.2. INSTALLATION HISTORY 2-3
2.3. MUNITIONS RELATED TRAINING / STORAGE / USAGE 2-4

3. PHYSICAL AND ENVIRONMENTAL CHARACTERISTICS 3-1

3.1. CLIMATE 3-1
3.2. TOPOGRAPHY 3-1
3.3. GEOLOGY 3-1
3.4. SOIL AND VEGETATION TYPES 3-2
3.5. HYDROLOGY 3-3
3.6. HYDROGEOLOGY 3-3
3.7. CULTURAL AND NATURAL RESOURCES 3-4
3.8. ENDANGERED AND SPECIAL STATUS SPECIES 3-5

4. SUMMARY OF DATA COLLECTION EFFORT 4-1

4.1. HISTORICAL ARCHIVE REPOSITORIES (OFF-SITE) 4-1
4.2. PERSONAL INTERVIEWS 4-4
4.3. ON-SITE DATA REPOSITORIES 4-6
4.4. VISUAL SURVEY 4-7
4.5. OFF-SITE DATA SOURCES 4-7

5. SITE CHARACTERISTICS 5-9

5.1. B-143 DROP TEST 5-9
5.1.1. History and Site Description 5-9
5.1.1.1. Topography 5-11
5.1.1.2. Geology 5-11
5.1.1.3. Soil and Vegetation Types 5-11
5.1.1.4. Hydrology 5-12
5.1.1.5. Hydrogeology 5-12
5.1.1.6. Cultural and Natural Resources 5-12
5.1.1.7. Endangered and Special Status Species 5-13
5.1.2. Visual Survey Observations and Results 5-13
5.1.3. Munitions and Munitions Related Materials Associated with the Site 5-14
5.1.4. MEC Presence 5-15

5.1.4.1. Known MEC Areas 5-15
5.1.4.2. Suspected MEC Areas 5-16
5.1.4.3. Areas Not Suspected to Contain MEC 5-16
5.1.5. Ordnance Penetration Estimates 5-16
5.1.6. Munitions Constituents 5-16
5.1.7. Contaminant Migration Routes 5-17
5.1.8. Receptors 5-18
5.1.8.1. Nearby Populations 5-18
5.1.8.2. Buildings Near/Within Site 5-19
5.1.8.3. Utilities On/Near Site 5-19
5.1.9. Land Use 5-19
5.1.10. Access Controls / Restrictions 5-19
5.1.11. Conceptual Site Model 5-20
5.1.12. Summary 5-24
5.2. B-2044 DROP TOWER/TEST RAIL 5-28
5.2.1. History and Site Description 5-28
5.2.1.1. Topography 5-29
5.2.1.2. Geology 5-29
5.2.1.3. Soil and Vegetation Types 5-29
5.2.1.4. Hydrology 5-30
5.2.1.5. Hydrogeology 5-30
5.2.1.6. Cultural and Natural Resources 5-30
5.2.1.7. Endangered and Special Status Species 5-31
5.2.2. Visual Survey Observations and Results 5-31
5.2.3. Munitions and Munitions Related Materials Associated with the Site 5-32
5.2.4. MEC Presence 5-33
5.2.4.1. Known MEC Areas 5-33
5.2.4.2. Suspected MEC Areas 5-33
5.2.4.3. Areas Not Suspected to Contain MEC 5-33
5.2.5. Ordnance Penetration Estimates 5-33
5.2.6. Munitions Constituents 5-34
5.2.7. Contaminant Migration Routes 5-34
5.2.8. Receptors 5-35
5.2.8.1. Nearby Populations 5-35
5.2.8.2. Buildings Near/Within Site 5-36
5.2.8.3. Utilities On/Near Site 5-36
5.2.9. Land Use 5-36
5.2.10. Access Controls / Restrictions 5-36
5.2.11. Conceptual Site Model 5-36
5.2.12. Summary 5-43
5.3. B-2930 PROCESS CONTROL AREA 5-58
5.3.1. History and Site Description 5-58
5.3.1.1. Topography 5-59
5.3.1.2. Geology 5-59
5.3.1.3. Soil and Vegetation Types 5-59
5.3.1.4. Hydrology 5-60

5.3.1.5. Hydrogeology 5-60
5.3.1.6. Cultural and Natural Resources 5-60
5.3.1.7. Endangered and Special Status Species 5-60
5.3.2. Visual Survey Observations and Results 5-60
5.3.3. Munitions and Munitions Related Materials Associated with the Site 5-62
5.3.4. MEC Presence 5-62
5.3.4.1. Known MEC Areas 5-63
5.3.4.2. Suspected MEC Areas 5-63
5.3.4.3. Areas Not Suspected to Contain MEC 5-63
5.3.5. Ordnance Penetration Estimates 5-63
5.3.6. Munitions Constituents 5-65
5.3.7. Contaminant Migration Routes 5-65
5.3.8. Receptors 5-65
5.3.8.1. Nearby Populations 5-66
5.3.8.2. Buildings Near/Within Site 5-66
5.3.8.3. Utilities On/Near Site 5-66
5.3.9. Land Use 5-66
5.3.10. Access Controls / Restrictions 5-67
5.3.11. Conceptual Site Model 5-67
5.3.12. Summary 5-71
5.4. PYRO AREA OUTSIDE TEST BURN PAD 5-84
5.4.1. History and Site Description 5-84
5.4.1.1. Topography 5-85
5.4.1.2. Geology 5-85
5.4.1.3. Soil and Vegetation Types 5-85
5.4.1.4. Hydrology 5-86
5.4.1.5. Hydrogeology 5-86
5.4.1.6. Cultural and Natural Resources 5-86
5.4.1.7. Endangered and Special Status Species 5-86
5.4.2. Visual Survey Observations and Results 5-86
5.4.3. Munitions and Munitions Related Materials Associated with the Site 5-88
5.4.4. MEC Presence 5-91
5.4.4.1. Known MEC Areas 5-92
5.4.4.2. Suspected MEC Areas 5-92
5.4.4.3. Areas Not Suspected to Contain MEC 5-92
5.4.5. Ordnance Penetration Estimates 5-92
5.4.6. Munitions Constituents 5-92
5.4.7. Contaminant Migration Routes 5-93
5.4.8. Receptors 5-94
5.4.8.1. Nearby Populations 5-95
5.4.8.2. Buildings Near/Within Site 5-95
5.4.8.3. Utilities On/Near Site 5-95
5.4.9. Land Use 5-96
5.4.10. Access Controls / Restrictions 5-96
5.4.11. Conceptual Site Model 5-96
5.4.12. Summary 5-105

5.5. TEST PADS ON HILL BEHIND B-198 5-109
5.5.1. History and Site Description 5-109
5.5.1.1. Topography 5-111
5.5.1.2. Geology 5-111
5.5.1.3. Soil and Vegetation Types 5-111
5.5.1.4. Hydrology 5-111
5.5.1.5. Hydrogeology 5-112
5.5.1.6. Cultural and Natural Resources 5-112
5.5.1.7. Endangered and Special Status Species 5-112
5.5.2. Visual Survey Observations and Results 5-112
5.5.3. Munitions and Munitions Related Materials Associated with the Site 5-114
5.5.4. MEC Presence 5-115
5.5.4.1. Known MEC Areas 5-116
5.5.4.2. Suspected MEC Areas 5-116
5.5.4.3. Areas Not Suspected to Contain MEC 5-116
5.5.5. Ordnance Penetration Estimates 5-116
5.5.6. Munitions Constituents 5-116
5.5.7. Contaminant Migration Routes 5-117
5.5.8. Receptors 5-118
5.5.8.1. Nearby Populations 5-118
5.5.8.2. Buildings Near/Within Site 5-119
5.5.8.3. Utilities On/Near Site 5-119
5.5.9. Land Use 5-119
5.5.10. Access Controls / Restrictions 5-119
5.5.11. Conceptual Site Model 5-120
5.5.12. Summary 5-130

APPENDICES

APPENDIX A REFERENCES

APPENDIX B PROJECT SOURCE DATA – GENERAL

APPENDIX C: PROJECT SOURCE DATA – SITE SPECIFIC

C-1: B-143 Drop Test
C-2: B-2044 Drop Tower/Test Rail
C-3: B-2930 Process Control Area
C-4: Pyro Area Outside Test Burn Pad
C-5: Test Pads on Hill Behind B-198

APPENDIX D: ORDNANCE TECHNICAL DATA SHEETS

LIST OF MAPS

MAP 2.1-1: AREA LOCATION MAP 2-2
MAP 5.1-1: VISUAL SURVEY: B-143 DROP TEST 5-25
MAP 5.1-2: RANGE/SITE DETAILS: B-143 DROP TEST 5-26
MAP 5.1-3: MUNITIONS CHARACTERIZATION: B-143 DROP TEST 5-27
MAP 5.2-1: VISUAL SURVEY: B-2044 DROP TOWER/TEST RAIL 5-44
MAP 5.2-2: RANGE/SITE DETAILS: B-2044 DROP TOWER/TEST RAIL 5-45
MAP 5.2-3: MUNITIONS CHARACTERIZATION: B-2044 DROP TOWER/TEST RAIL 5-46
MAP 5.3-1: VISUAL SURVEY: B-2930 PROCESS CONTROL AREA 5-72
MAP 5.3-2: RANGE/SITE DETAILS: B-2930 PROCESS CONTROL AREA 5-73
MAP 5.3-3: MUNITIONS CHARACTERIZATION: SITE B-2930 PROCESS CONTROL AREA 5-74
MAP 5.4-1: VISUAL SURVEY: PYRO AREA OUTSIDE TEST BURN PAD 5-106
MAP 5.4-2: RANGE/SITE DETAILS: PYRO AREA OUTSIDE TEST BURN PAD 5-107
MAP 5.4-3: MUNITIONS CHARACTERIZATION: PYRO AREA OUTSIDE TEST BURN PAD 5-108
MAP 5.5-1: VISUAL SURVEY: TEST PADS ON HILL BEHIND B-198 5-131
MAP 5.5-2: RANGE/SITE DETAILS: TEST PADS ON HILL BEHIND B-198 5-132
MAP 5.5-3: MUNITIONS CHARACTERIZATION: TEST PADS ON HILL BEHIND B-198 5-133

LIST OF FIGURES

FIGURE 5.1-1: VIEW OF B-143 DROP TEST 5-9
FIGURE 5.1-2: SITE OF FORMER B-143 DROP TEST WITH BUILDING B-143 IN BACKGROUND 5-11
FIGURE 5.1-3: SURVEY TEAM STANDING IN THE CLEARING AT THE B-143 DROP TEST. 5-14
FIGURE 5.2-1 VIEW OF DROP TOWER 5-28
FIGURE 5.2-2: VIEW OF TEST RAIL 5-29
FIGURE 5.2-3: CONCRETE IMPACT PAD OF DROP TOWER 5-31
FIGURE 5.2-4: B-2044 DROP TOWER/TEST RAIL GRAPHICAL ILLUSTRATION 5-42
FIGURE 5.3-1: NORTHEAST SECTION OF AREA AROUND B-2930 5-58
FIGURE 5.3-2: B-2930 IS THE BLUE BUILDING IN THE LEFT OF PHOTOGRAPH, BEHIND VEHICLE .. 5-61
FIGURE 5.4-1: VIEW OF THE CONCRETE TESTING BASINS LOCATED INSIDE FENCE 5-84
FIGURE 5.4-2: VIEW OF ONE CONCRETE TESTING BASIN IN POOR CONDITION. 5-87
FIGURE 5.4-3: VIEW OF CONCRETE BASIN WITH STORAGE AREA, DUMPSTERS AND BUILDING 126 IN BACKGROUND 5-88

FIGURE 5.4-4: MEC EXPOSURE PATHWAY ANALYSIS 5-102
FIGURE 5.4-5: MC EXPOSURE PATHWAY ANALYSIS 5-103
FIGURE 5.4-6: PYRO AREA OUTSIDE TEST BURN PAD GRAPHICAL ILLUSTRATION 5-104
FIGURE 5.5-1: VIEW OF TEST PADS ON HILL BEHIND B-198 5-109
FIGURE 5.5-2 1952 AERIAL PHOTOGRAPH 5-110
FIGURE 5.5-3 1966 AERIAL PHOTOGRAPH 5-110
FIGURE 5.5-4: CONCRETE HOLDING TANK 5-113
FIGURE 5.5-5: VIEW OF PLASTIC DRAINAGE PIPING SURROUNDING TEST PADS 5-114
FIGURE 5.5-6: MEC EXPOSURE PATHWAY ANALYSIS 5-127
FIGURE 5.5-7: MC EXPOSURE PATHWAY ANALYSIS 5-128
FIGURE 5.5-8: TEST PADS ON HILL BEHIND B-198 GRAPHICAL ILLUSTRATION 5-129

LIST OF TABLES

TABLE 2.2-1: HISTORY OF NSWC CRANE 2-3
TABLE 3.8.1: SUMMARY OF KNOWN OR POTENTIAL PROTECTED SPECIES 3-5
TABLE 5.1-1: CONCEPTUAL SITE MODEL INFORMATION PROFILES – B-143 DROP TEST 5-20
TABLE 5.2-1: CONCEPTUAL SITE MODEL INFORMATION PROFILES – B-2044 DROP TOWER/TEST RAIL 5-37
TABLE 5.3-1: CONCEPTUAL SITE MODEL INFORMATION PROFILES – B-2930 PROCESS CONTROL AREA 5-67
TABLE 5.4-1: CONCEPTUAL SITE MODEL INFORMATION PROFILES – PYRO AREA OUTSIDE TEST BURN PAD 5-97
TABLE 5.5-1: CONCEPTUAL SITE MODEL INFORMATION PROFILES – TEST PADS ON HILL BEHIND B-198 5-121

ACRONYMS

bgs	below ground surface
BRAC	Base Realignment and Closure
°C	Degrees Celsius
CAAA	Crane Army Ammunition Activity
CAD	Cartridge Actuated Device
CD	Compact Disc
CERCLA	Comprehensive Environmental Response, Compensation and Liability Act
CFR	Code of Federal Regulations
CSM	Conceptual Site Model
CWM	Chemical Warfare Materiel
DERP	Defense Environmental Restoration Program
DMM	Discarded Military Munitions
DoD	Department of Defense
DU	Depleted Uranium
EFANE	Engineering Field Activity Northeast
EO	Explosive Ordnance
EOD	Explosive Ordnance Disposal
°F	Degrees Fahrenheit
FUDS	Formerly Used Defense Site
FY	Fiscal Year
GIS	Geographic Information System
KY	Kentucky
LANTDIV	Atlantic Division
MEC	Munitions and Explosives of Concern
MC	Munitions Constituents
MK	Mark
MRP	Munitions Response Program
MRP	Munitions Response Program
NAVFAC	Naval Facilities Engineering Command
NCP	National Contingency Plan

NSWC	Naval Surface Warfare Center
OE	Ordnance and Explosives
OESO	Ordnance Explosives Support Office
OTA	Ordnance Test Area
PA	Preliminary Assessment
PAD	Propellant Actuated Device
PAO	Public Affairs Office
POC	Point of Contact
RDX	Hexahydro-Trinitro-Triazine
RG	Record Groups
RP	Red Phosphorus
SARA	Superfund Amendment and Reauthorization Act
SI	Site Investigation
SWMU	Solid Waste Management Unit
TNT	Trinitrotoluene
U.S.	United States
U.S.C.	United States Code
USDA	United States Department of Agriculture
USACE	United States Army Corps of Engineers
UXO	Unexploded Ordnance
USEPA	United States Environmental Protection Agency
WP	White Phosphorus

GLOSSARY OF TERMS

Base Realignment and Closure (BRAC) – A Department of Defense (DoD) program that focuses on compliance and cleanup efforts at military installations undergoing closure or re-alignment, as authorized by Congress in four rounds of base closures for 1988, 1991, 1993, and 1995. (DERP Management Guidance, September, 2001)

Closed Range – A range that has been taken out of service as a range and that either has been put to new uses that are incompatible with range activities or is not considered by the military to be a potential range area. A closed range is still under the control of a DoD component. (DERP Management Guidance, September, 2001)

Defense Site – All locations that are or were owned by, leased to, or otherwise possessed or used by the DoD. The term does not include any operational range, operating storage or manufacturing facility, or facility that is used or was permitted for the treatment or disposal of military munitions. (10 U.S.C. 2710(e)(1))

Discarded Military Munitions – Military munitions that have been abandoned without proper disposal or removed from storage in a military magazine or other storage area for the purpose of disposal. The term does not include unexploded ordnance, military munitions that are being held for future use or planned disposal, or military munitions that have been properly disposed of consistent with applicable environmental laws and regulations. (10 U.S.C. 2710(e)(2))

Explosive Ordnance Disposal (EOD) – The detection, identification, field evaluation, rendering safe, recovery, and final disposal of unexploded ordnance (UXO). It may also include the rendering-safe and/or disposal of EO (explosive ordnance) which has become hazardous by damage or deterioration, when disposal of such EO requires techniques, procedures, or equipment which exceed the normal requirements for routine disposal. (OPNAVINST 8027.1G, 14 Feb 92)

Explosives Safety – A condition where operational capability and readiness, personnel, property, and the environment are protected from the unacceptable effects of an ammunition or explosives mishap. (DoD Directive 6055.9 July 1996)

Formerly Used Defense Site (FUDS) – Real property that was formerly owned by, leased by, possessed by, or otherwise under the jurisdiction of the Secretary of Defense or the Components (including governmental entities that are the legal predecessors of DoD or the Components) and those real properties where accountability rested with DoD but where activities at the property were conducted by contractors (i.e., government-owned, contractor-operated (GOCO) properties) that were transferred from DoD control prior to October 17, 1986. The status of a site as a FUDS is irrespective of current ownership or current responsibility within the federal government. (DERP Management Guidance, September, 2001)

Munitions Constituents (MC) – Any materials originating from unexploded ordnance, discarded military munitions or other military munitions, including explosive and non-explosive materials, and emission, degradation, or breakdown elements of such ordnance or munitions. (10 U.S.C. 2710 (e)(4))

Munitions and Explosives of Concern (MEC) – This term, which distinguishes specific categories of military munitions that may pose unique explosives safety risks, means: unexploded ordnance, discarded military munitions or munitions constituents (e.g., TNT, RDX) present in high enough concentrations to pose an explosive hazard. (OUSD(AT&L) 18 December 2003)

Operational Range – A range that is under the jurisdiction, custody, or control of the Secretary of Defense and that is used for range activities, or although not currently being used for range activities, that is still considered by the Secretary to be a range and has not been put to a new use that is incompatible with range activities. (10 U.S.C. 101 (e)(3))

Other than Operational Range – Encompasses closed, transferred and transferring ranges

Range – A designated land or water area set aside, managed, and used for range activities of the DoD. Ranges include firing lines and positions, maneuver areas, firing lanes, test pads, detonation pads, impact areas, electronic scoring sites, buffer zones with restricted access and exclusionary areas, airspace areas designated for military used in accordance with regulations and procedures prescribed by the Administrator of the Federal Aviation Administration. (10 U.S.C. 101 (e)(3))

Transferred Range – A property formerly used as a military range that is no longer under military control and had been leased by the DoD, transferred, or returned from the DoD to another entity, including federal entities. This includes a range that is no longer under military

control but was used under the terms of a withdrawal, executive order, special-use permit or authorization, right-of-way, public land order, or other instrument issued by the federal land manager. (DERP Management Guidance, September, 2001)

Transferring Range – A range that is proposed to be transferred or returned from the DoD to another entity, including federal entities. This includes a range that is used under the terms of a withdrawal, executive order, act of Congress, special-use permit or authorization, right-of-way, public land order, or other instrument issued by the federal land manager or property owner. An operational or closed range will not be considered a "transferring range" until the transfer is imminent (generally defined as the transfer date is within 12 months and a receiving entity has been notified). (DERP Management Guidance, September, 2001)

Unexploded Ordnance – Military munitions that have been primed, fused, armed, or otherwise prepared for action; have been fired, dropped, launched, projected, or placed in such a manner as to constitute a hazard to operations, installations, personnel, or material; and remain unexploded either by malfunction, design, or any other cause. (10 U.S.C. 101(e)(5))

EXECUTIVE SUMMARY

The Department of Defense (DoD) has established the Military Munitions Response Program under the Defense Environmental Restoration Program (DERP) to address munitions and explosives of concern (MEC) [including unexploded ordnance (UXO) and discarded military munitions (DMM)] and munitions constituents (MC) at other than operational military ranges and other sites. Closed, transferred, and transferring military ranges and sites not located on an operational range are considered other than operational. This report addresses other than operational ranges and sites at an active installation. It may include transferred ranges and munitions disposal sites associated with an active installation if they are not included in BRAC or FUDS.

This report represents a Preliminary Assessment (PA) for the Naval Surface Warfare Center, Crane Division (NSWC Crane), Indiana. The DoD, United States Navy, and United States Environmental Protection Agency guidance for conducting and documenting PAs was followed and tailored, where appropriate, to address the unique aspects of MEC and MC.

NSWC Crane is located in Martin County in south-central Indiana. NSWC Crane is the third largest naval installation in the world encompassing 100 square miles and employing approximately 3,400 Naval employees and 550 Army employees. The installation was originally built to prepare, load, renovate, receive, store, and issue all ammunition, including pyrotechnics and illuminating projectiles, and to act as a principal source of supply at a most critical time - the early days of World War II; however, due to its expertise in engineering and electronics, NSWC Crane today is a multi-mission, multi-service product center with both fleet support and industrial base missions.

Based upon archival research and the Navy range inventory, the following land ranges are known to have been associated with the installation over the years.

B-143 Drop Test: This 0.06-acre test area consisted of three pieces: the 40-foot drop tower, the concrete drop pad, and test building. The area was used from 1968 to 1980 for testing Mark (MK) 118 Mod 0, Rockeye Bomblets. The test area was located adjacent to Building 143. No

evidence was observed on the surface indicating MEC at the B-143 Drop Test during the site visit. MEC or MC has not been investigated at this site.

B-2044 Drop Tower/Test Rail: This 0.013-acre test area consisted of two areas: the drop tower and test rail. The area is grass covered. The area was used from 1951 to 1973 for testing 20-mm cartridges at the drop tower and cartridge actuated devices (CADs)/propellant actuated devices (PADs) for ejection seat testing at the test rail. The test area was located east of Building 2044. No evidence was observed indicating MEC on the surface at the B-2044 Drop Tower/Test Rail during the site visit. There is no physical evidence to support MEC presence at the B-2044 Drop Tower/Test Rail. MEC or MC has not been investigated at this site.

B-2930 Process Control Area: This 0.0042-acre test area was located where Building 2930 is currently located. The asphalt parking lot behind Building 2930 now covers the test area. The test area was used for pyrotechnics testing of MK 24 aircraft parachute flares and burning magnesium. The test area was used from 1963 through 1968. The area was the major pyrotechnics testing area before the current pyrotechnics testing area set-up. No evidence was observed indicating MEC on the surface at B-2930 Process Control Area during the site visit. MEC or MC has not been investigated at this site.

Pyro Area Outside Test Burn Pad: This 0.002-acre test area was used to test pyrotechnics behind Building 126. Pyrotechnic testing currently occurs in Building 126, and two open square concrete testing basins remain outside where testing occurred. The basins were used for burning pyrotechnics and testing from 1984 through 1985. No evidence of MEC was observed at the site during the site visit. MEC or MC has not been investigated at this site.

Test Pads on hill behind B-198: This 0.01-acre site was used from 1983 through 1985 for the development and testing of safe disposal methods for various types of dyes. Personnel at NSWC Crane developed and tested an item constructed of a 2.75-inch warhead that functioned through the use of a blasting cap detonating a C-4 booster, which then detonated a Baratol imploding charge. The imploding charge sublimed dye pellets that were contained within the warhead that formed a colored smoke cloud. Additionally, M18 smoke grenades were also tested at this site. No evidence of MEC was observed at the site. MEC or MC has not been investigated at this site.

1. INTRODUCTION

The Department of Defense (DoD) has established the Military Munitions Response Program under the Defense Environmental Restoration Program (DERP) to address munitions and explosives of concern (MEC) [including unexploded ordnance (UXO) and discarded military munitions (DMM)] and munitions constituents (MC) at other than operational military ranges and other sites. Closed, transferred, and transferring military ranges and sites not located on an operational range are considered other than operational. This report addresses other than operational ranges and sites at an active installation. It may include transferring and/or transferred ranges and munitions disposal sites associated with an active installation if they are not included in BRAC or FUDS.

The DoD and the United States (U.S.) Navy are currently establishing policy and guidance for munitions response actions under the Navy Munitions Response Program (MRP). However, key program drivers developed to date conclude that munitions response actions will be conducted under the process outlined in the National Contingency Plan (NCP) (40 CFR 300) as authorized by the Comprehensive Environmental Response, Compensation, and Liability Act of 1980, 42 United States Code (U.S.C.) 9605, as amended by the Superfund Amendments and Reauthorization Act of 1986 (SARA), Pub. L. 99-499 (hereinafter CERCLA). This report represents a Preliminary Assessment (PA) for the Naval Surface Warfare Center, Crane Division (NSWC Crane), Indiana, in Martin County. DoD, Navy, and U.S. Environmental Protection Agency (USEPA) guidance for conducting and documenting PAs were followed and tailored, where appropriate, to address the unique aspects of MEC and MC.

This PA Report is organized into the following sections:

- Section 1 – Introduction
- Section 2 – Installation Background
- Section 3 – Physical and Environmental Characteristics
- Section 4 – Summary of Data Collection Effort
- Section 5 – Site Characteristics

The following supporting information is appended to this PA:

- References (Appendix A)
- Project Source Data – General (Appendix B)
- Project Source Data – Site Specific (Appendix C)
- Ordnance Technical Data Sheets (Appendix D)

An interactive compact disc (CD) will be included with the final version of this report. The CD will include electronic files of the report text, tables, and figures; appendices; project source data; additional site photographs; and interactive maps of the installation and site.

1.1. Purpose

This PA summarizes the history of munitions use for the following former ranges at the NSWC Crane; B-143 Drop Test, B-2044 Drop Tower/Test Rail, B-2930 Process Control Area, Pyro Area Outside Test Burn Pads, and the Test Pads on Hill Behind B-198. The PA provides an assessment of the current conditions with respect to MEC and MC. The PA provides the necessary information for Navy and regulatory decision makers to: 1) eliminate from further consideration those MEC sites that pose minimal or no threat to public health or the environment; 2) differentiate MEC sites that may not require further munitions response actions from those that will require further investigation and/or munitions response actions; 3) determine if an imminent explosives safety hazard from MEC is present that warrants an accelerated response action; and 4) determine if an imminent hazard from MC to human health and the environment is present and warrants an accelerated response action.

1.2. Programmatic Framework

The regulatory structure for managing Navy MRP sites is guided by a complex mixture of federal, state, and local laws, as well as DoD and Navy regulations and guidance, and provides the necessary information for Navy decision makers. The key legislation, policy, and guidance directing the program includes, but is not limited to, the following:

Defense Environmental Restoration Program (DERP) Management Guidance (September 2001)

The DERP Management Guidance establishes an MRP element for MEC and MC defense sites. The history of the DERP dates back to the SARA of 1986[1]. The scope of the DERP is defined in 10 U.S.C. §2701(b), which states that the:

> Goals of the program shall include the following: ... (1) The identification, investigation, research and development, and cleanup of contamination from hazardous substances, and pollutants and contaminants. (2) Correction of other environmental damage (such as detection and disposal of unexploded ordnance) which creates an imminent and substantial endangerment to the public health or welfare or to the environment ...

Draft DoD Directive Military Munitions Response Policy on Other Than Operational Ranges

The DoD Directive is scheduled to be finalized in fiscal year (FY) 2004, pending review and concurrence from the DoD services. The Draft DoD Directive 4715.MRP (September 2003 version) states that munitions response will be "in accordance with CERCLA and the National Oil and Hazardous Substances Pollution Contingency Plan (NCP)".

National Defense Authorization Act (FY02) (Sections 311-312)

Sections 311-312 of the National Defense Authorization Act of FY02 reinforced the DoD's 2001 DERP Management Guidance by tasking the DoD to develop and maintain an inventory of defense sites that are known or suspected to contain MEC and MC. Section 311 requires the DoD to develop a protocol for prioritizing defense sites for response activities in consultation with the states and Tribes. Section 312 requires the DoD to create a separate program element to ensure that the DoD can identify and track munitions response funding.

The September 2001 Management Guidance for the DERP and the Defense Authorization Act 2002, described above, established the MRP. The DoD provides program guidance and methods for conducting a baseline inventory of defense sites containing, or potentially containing, MEC and/or MC. The Navy baseline inventory of sites was completed in FY 2002 and was used to establish the sites where PAs are needed to further evaluate the potential for characterize MEC and MC.

---

[1] *SARA was signed into law on October 17, 1986, and CERCLA of 1980, 42 U.S.C. §9601* et seq. *Related sections in Title 10 of the U.S.C. (10 U.S.C. §§2702-2710 and §§2810-2811) further define the program.*

1.3. Project Management

This PA is being coordinated and managed by the Navy Engineering Field Activity Northeast (EFANE), a component of the Atlantic Division (LANTDIV) of the Naval Facilities Engineering Command (NAVFAC). The EFANE performs engineering functions for Navy installations throughout the northeast U.S. and is the Program Manager for this PA. Malcolm Pirnie, Inc. has been contracted to prepare this PA. The NAVFAC Southern Division Remedial Project Manager and the installation points of contact (POC) for NSWC Crane provided valuable information and assistance throughout the PA data collection process.

1.4. Preliminary Assessment Approach

CERCLA implementing guidance, which was prepared for sites contaminated with hazardous substances, describes the PA as a limited-scope investigation based upon existing and available data. However, the guidance also states that the PA process developed under CERCLA is not equally applicable to all sites and all contaminants and that variation from the guidance may be necessary. Sites containing MEC are prime examples of sites where the generic CERCLA process is incomplete. Unique explosives safety issues associated with MEC cannot be assessed solely with the parameters developed for chemical and hazardous waste contaminants. While this PA generally follows CERCLA guidance, certain elements of the report have been tailored to address the unique explosives safety aspects of MEC.

The PA process for each of the sites involves collecting and reviewing existing and available information about the site. Data collection activities included off-site and on-site research and interviews. It also included a visual survey to assess physical evidence that might indicate the presence of MEC (e.g., discarded munitions items, ordnance penetration holes, and scarred trees) and MC (e.g., ground scarring, stressed vegetation, chemical residue) at the site. The Malcolm Pirnie data collection team conducted the on-site portion of the data collection and visual survey on March 18-20, 2003.

This PA is inclusive and makes use of all available data relating to munitions use at the NSWC Crane, including historical records, field data, anecdotal evidence, interviews with site personnel, and professional knowledge and experience. It is based, in part, on information provided in documents referenced in Appendix A and is subject to the limitations and qualifications presented in the referenced documents.

2. INSTALLATION BACKGROUND

The following sections provide general information about NSWC Crane, including its location and setting; a brief history of the installation; its missions over time; and a history of munitions related training, storage, and usage.

2.1. Location and Setting

NSWC Crane covers roughly the northern third of Martin County with a small overlap into Greene County to the north and an even smaller overlap into Lawrence County on the east. The approximately 63,000-acre base is approximately 37 miles southwest of Bloomington, Indiana, and approximately 70 miles southwest of Indianapolis, Indiana, as shown in Map 2.1-1. NSWC Crane is situated in a rural setting in southwest Indiana. Surrounding towns include Crane Village to the northwest, Burns City to the west, and Bedford to the east. An 800-acre lake, Lake Greenwood, is located along the north-central portion of the base and serves as the primary water supply for the base. Map 2.1-1 depicts the location of all MEC sites on the installation.

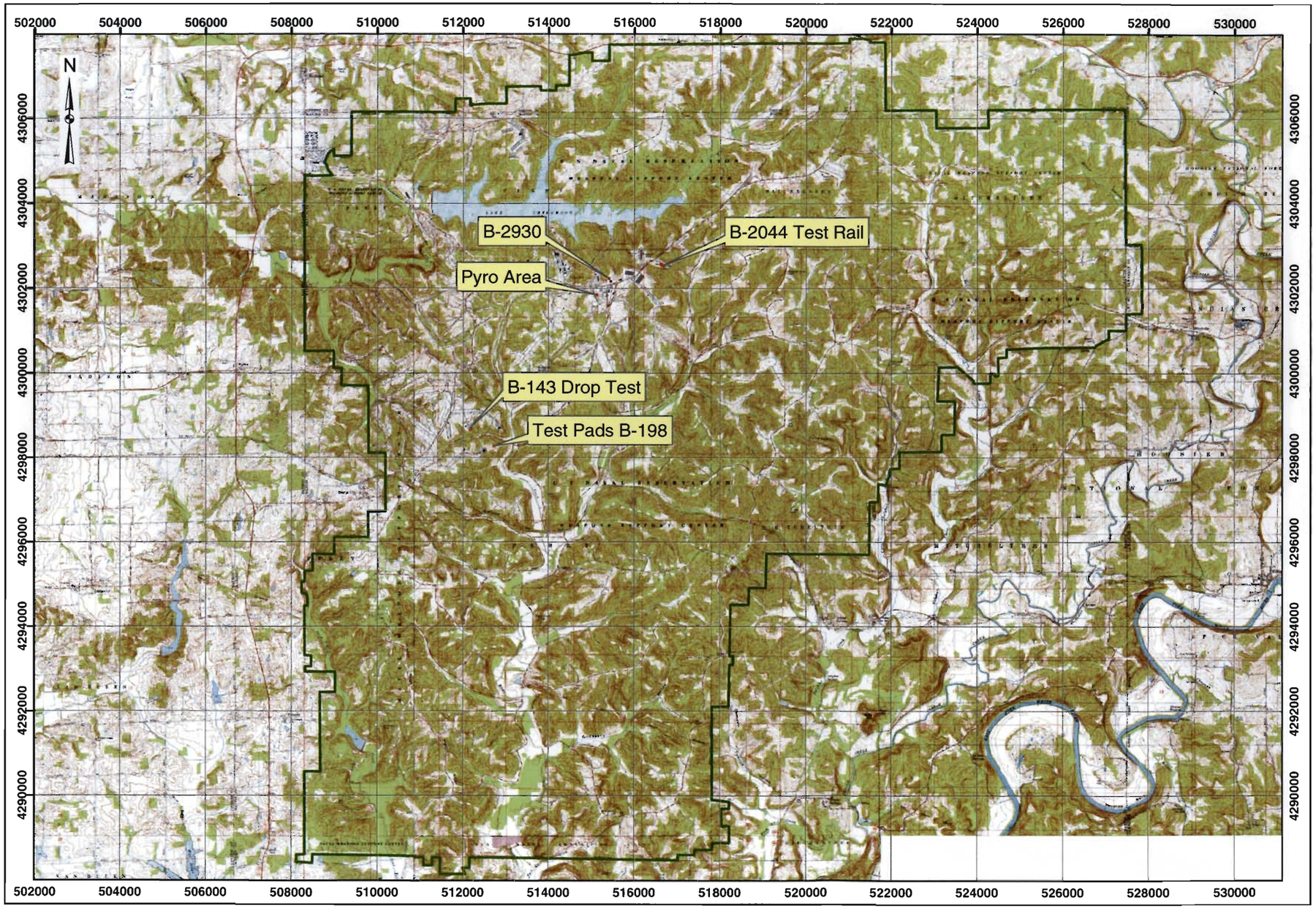

Preliminary Assessment
NSWC Crane, Indiana

MALCOLM PIRNIE

Map 2.1-1
Area Location Map

Legend

Installation Boundary

Ranges

1,500 0 1,500 3,000 4,500 Meters

Data Source: Data Source: USGS. 7.5 Minute Series
Topographic Survey Map
Owensburg, IN (1976)
Indian Springs, IN (1979)
Scotland, IN (1979)
Williams, IN (1979)
Koleen, IN (1979)
Loogootee, IN (1976)
Odon, IN (1976)
Schoals, IN (1960)

Coordinate System: UTM Zone 16N
Datum: NAD83
Units: Meters

Contract: N62472-02-D-1300
Edition: Revised Draft Final Preliminary Assessment
Date: May 2004

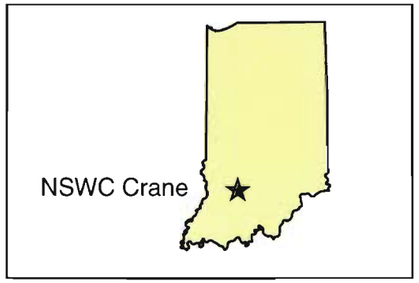

2.2. Installation History

NSWC Crane began in 1941 as the Naval Ammunition Depot. Since its inception, NSWC Crane has been under four different commands. The Ammunition Quality Evaluation Unit was added in 1947, which led NSWC Crane into expanded activities, capabilities, and expertise. In 1975, the installation name changed to Naval Weapons Support Center, Crane to reflect its true function of weapons support. The Crane Army Ammunition Activity (CAAA) was established in 1977 to assume the loading, assembly and storage of ammunition at the installation. After merging with the Naval Ordnance Station at Louisville, Kentucky (KY), in 1992, the installation received its current name: Crane Division, Naval Surface Warfare Center, and continues to be a recognized leader in highly technical product lines servicing the Navy. Table 2.2-1 contains a summary of NSWC Crane's history.

Table 2.2-1: History of NSWC Crane

Time Period	Significant Events
Prior to 1795	Indian Territory
1795 – 1940	Greenville Treaty signed and settlers arrived. The White River Project was dedicated in 1939, which provided a state park and restored forest productivity.
1941	Established in 1941 as the *Naval Ammunition Depot* for the production, testing, and storage of ordnance, including pyrotechnics and illuminating projectiles, under the command of the Bureau of Ordnance.
1947	Ammunition Quality Evaluation Unit was added by the Bureau of Ordnance to expand the quality control system and establish a laboratory at Crane.
1950s	Crane came under command of the Bureau of Weapons and expanded activities, capabilities, and expertise to include small arms, sonobouy surveillance, microwave tubes, POLARIS missiles, and other engineering support.
1960s	Crane came under command of the Naval Ordnance Systems Command and began providing technical support for weapons systems.
1974	Crane came under the Naval Sea Systems Command and Naval Ship Systems Command.
1975	The installation name changed to *Naval Weapons Support Center, Crane* to reflect its true function.
1977	Establishment of the tenant command CAAA. The CAAA assumed the loading, assembly and storage of ammunition at the installation.
1992	Crane was merged with the Naval Ordnance Station at Louisville, KY to form the *Crane Division, Naval Surface Warfare Center*.
Present	NSWC Crane serves a modern and sophisticated Navy as a recognized leader in highly technical product lines.

2.3. Munitions Related Training / Storage / Usage

During World War II, the Korean Conflict and the Vietnam Conflict, NSWC Crane developed, tested, stored, trained with and used all types of Naval munitions including small arms, detonators, cartridge actuated devices (CADs), propellant actuated devices (PADs) and various pyrotechnics.

3. PHYSICAL AND ENVIRONMENTAL CHARACTERISTICS

The following sections provide general information for NSWC Crane, including its climate; topography; geology; soil and vegetation types; hydrology; hydrogeology; cultural and natural resources; and endangered species.

3.1. Climate

NSWC Crane is located in a temperate climate zone, which has a wide temperature range between summer and winter. According to the National Climatic Data Center, the summers are warm and humid, and the winters, though generally mild, often have very cold periods of short duration. The average minimum temperature in January is 21 degrees Fahrenheit (°F), and the average maximum temperature is 38°F. The average minimum temperature in July is 66°F, and the average maximum temperature is 88°F. Precipitation totals almost 44.3 inches annually, with an average rainfall of 3.7 inches per month. Average humidity ranges from 40 to 90 percent in summer and 60 to 90 percent in winter. Winds in southwestern Indiana are generally from the south-southwest at an average speed of 8.2 miles per hour. The frost line in southern Indiana is approximately 2.5 feet below ground surface (bgs).

3.2. Topography

The topography of NSWC Crane is composed of flat to gently undulating terrain dissected by numerous well-defined drainage ways. Elevation at NSWC Crane ranges from a maximum of 860 feet in the eastern part to a minimum of 425 feet in the western part of the installation. The V-shaped drainages in the north progress to 2,000-foot wide floodplains in the south and rise approximately 150 to 200 feet to the ridgelines on slopes of 20 to 30 degrees. Soil erosion could occur along the slopes of the drainage paths at NSWC Crane.

3.3. Geology

Indiana is a large anticline that plunges to the northwest. Consequently, this large structural feature governs the age and type of rocks in Indiana. Some of the youngest rocks are in the southwestern corner of the state. The youngest rocks are mostly sandstones and shales with minor amounts of limestone and coal. The distribution of rock types is the major control on the

physiographic provinces in the south-central part of the state. In the southwestern part of the state, the rocks of the Raccoon Creek Group overlie the Mississippian-Pennsylvanian Unconformity. This group consists of mostly sandstone and shale with minor amounts of coal, limestone, and clay.

The sedimentary bedrock beneath NSWC Crane dips gently to the west-southwest. The inclination of the strata reflects NWSC Crane's location on the eastern flank of the Illinois Basin. This section of the basin is comprised of Pennsylvanian and Mississippian strata consisting of shale, sandstone, limestone, and coal (Pennsylvanian) beds. The Pennsylvanian Mansfield Formation (Raccoon Creek Group) unconformably overlies the Mississippian Stephensport and West Baden Groups at the site.

Rocks of lower Pennsylvania and upper Mississippian Ages underlie the region of Indiana in which NSWC Crane is located. With the exception of minor outwash and lacustral deposits in the northwest corner of the facility, there are no Pleistocene glacial deposits covering the installation. Surface deposits at NSWC Crane consist of recent (Holocene) and Pleistocene unconsolidated alluvial silt, sand, and gravel, and residual soils developed from the underlying rock.

3.4. Soil and Vegetation Types

According to the Soil Survey of Martin County, Indiana, conducted by the U.S. Department of Agriculture (USDA), Forest Service, in cooperation with the Indiana Department of Natural Resources, Soil and Water Conservation Committee, the primary soil types located in the area of the NSWC Crane, Martin County, are various silt loams with a variety of slopes.

The following silt loams identified within the area are nearly level and/or gently sloping, deep, poorly drained, moderately permeable soils that are prone to flooding for varying lengths of time: Birds silt loam, Bonnie silt loam, Burnside loam, Haymond silt loam, Johnsburg silt loam, Wakeland silt loam, and Wilbur silt loam. Most of these soil types are used for cultivated crops, grasslands, or woodlands. Frost heave may be associated with these types of soils due to the silty fine grain and poorly drained soils

Some silt loams located in the area are nearly level and gently sloping, deep, well drained, moderately permeable soils: Camden silt loam, Hosmer silt loam, Pike silt loam, Pekin silt loam, Wellston silt loam, and Zanesville silt loam. These soil types are well suited to trees, grasses, crops, and sites for dwellings. Some are also good for septic tank absorption fields. Even though these soils contain fine grains, frost heave may not be a concern since the soils are very well drained.

Soil erosion could occur within all types of soils located at NSWC Crane if located on the higher slopes that are along the drainage paths.

3.5. Hydrology

NSWC Crane is located within the Lower East Fork White watershed. The East Fork White River flows approximately 40 miles southwest before joining the Muscatatuck River, which eventually joins the Ohio River. NSWC Crane is located approximately 10 miles northwest of the East Fork White River. The surface drainage from Crane has formed a dense, dendritic pattern throughout the installation. Six creeks in four drainage basins carry surface water off the installation. Drainage from the basin in the extreme eastern part of Crane consists of several small drainage ways. The north and northwest drainage basin eventually empties into Furst Creek, which flows in a westerly direction and crosses the installation boundary. Rainey Hollow, Sulphur Creek, and Little Sulphur Creek drain the eastern basin. The drainage basin occupying the central portion of the installation is where Boggs Creek and Turkey Creek receive drainage from the industrial area and that portion of the containment area south of Roads H43 and H5.

3.6. Hydrogeology

Groundwater resources at NSWC Crane have not been studied extensively because the facility utilizes surface waters from Lake Greenwood for human consumption, process operations, recreation, and several soil and water conservation ponds. However, the existing lithologies, occurrences of springs and seeps, and the well-developed surface drainage indicate the existence of groundwater that is hydraulically connected to the surface environment. Available groundwater data from the 1940s indicates that limited water is located at 141 and 313 feet bgs, with the shallowest water level observed at 85 feet bgs. The groundwater at NSWC Crane appears to be divided into two distinct regimes--one associated with the soil cover and one

associated with bedrock. The shallow groundwater is probably transient; during periods of excessive, prolonged rainfall and during the early spring months, there is probably saturated soil and free water above the soil-rock contact. This condition dissipates by percolation into the bedrock and into intermittent or perennial streams. The groundwater associated with the bedrock is stable and probably fluctuates only a minor amount (less than 10 feet) per year. Possibly more than one zone of saturation exists in the bedrock due to the successive beds of sandstone, shale, and limestone. The shale beds should be the least permeable of the series and, where underlying a permeable sandstone or limestone, would support a saturated or free water zone. These shale zones grade laterally to zones of sandstone, so the downward percolating water would be free to move continually downward.

3.7. Cultural and Natural Resources

On a national level, NSWC Crane is considered historically significant as the primary ammunition depot for the east coast requirements of the Navy; however, according to the Cultural Resources Survey completed in June of 1992, there were no previously identified historic resources on the installation, and no buildings or structures were listed in local or state inventories or the National Register of Historic Place. The survey did identify a total of nineteen historic or prehistoric locations or possible locations, which were recorded on state survey forms. In addition, six building locations may have been eligible for listing on the National Register of Historic Places. However, according to the Indiana Department of Natural Resources Historic Preservation & Archaeology Department, no historical or archaeological sites located at NSWC Crane are listed on the National Register of Historic Places or the state inventory.

There are at least 14 caves on NSWC Crane, which range in size from small crevices or pits to the 1,500 feet that have been mapped as the Aunt Liz Cave. Cave exploration is not permitted for safety reasons and to prevent disturbances of bats that inhabit some of the caves.

Twenty-eight cemeteries are located within NSWC Crane's boundaries. The cemeteries range in size from single graves to the nearly 700 graves in Salem Cemetery. Many of the early settlers of the area are buried in these cemeteries.

NSWC Crane is vitally concerned with the conservation of the natural environment, both on and off the installation. The Navy and the DoD have recognized these efforts with awards for

excellence in natural resources management. In 1995 and 1996, NSWC Crane won the Chief of Naval Operations Award for the best natural resources program. To share its abundant natural beauty with its neighbors, NSWC Crane has opened its 800-acre Lake Greenwood to the public for fishing and boating.

NSWC Crane provides stewardship to over 63,000 acres of land, of which about 49,000 acres are forested. This is the largest forested tract of land in Indiana under a single ownership. It has been and, hopefully, will continue to be an important part of the Indiana ecosystem.

The NSWC Crane forest has been important to the re-establishment of deer, turkey, ruffed grouse and eagles in Indiana. Wildlife research is conducted at NSWC Crane by both Purdue University and Indiana University to observe species, number, and overall condition of the wildlife located at NSWC Crane. The timber is managed and harvested at NSWC Crane to provide financial means for the installation and associated counties.

3.8. Endangered and Special Status Species

According to NSWC Crane's Natural Resources Guide, protected species that are known or have the potential to inhabit NSWC Crane are listed in the following Table 3.8.1:

Table 3.8.1: Summary of Known or Potential Protected Species

Ecological Receptors	Species
Federal Endangered	Indiana Bat (Myotis sodalis)
Federal Threatened	Bald eagle (Haliaeetus leucocephalus)
State Endangered	Bobcat, osprey, yellow-crowned night heron, timber rattlesnake
State Threatened	Bald eagle (Haliaeetus leucocephalus)
Other Ecological Receptors	• Approximately 20 species of amphibians including the bullfrog, spotted salamander and gray treefrog • Over 100 species of birds including the wood duck, barn swallow and marsh hawk • Approximately 30 species of mammals

including the white-tailed deer, coyote, raccoon, cottontail rabbit and wild turkey

- Over 45 species of fish including bluegill, crappie, largemouth bass and channel catfish
- Approximately 20 species of reptiles including the snapping turtle, northern copperhead, and eastern spiny softshell turtle
- Giant Canadian Geese
- Ginseng
- Grouse
- Several types of edible mushrooms

4. SUMMARY OF DATA COLLECTION EFFORT

Five primary sources of information were researched as part of the data collection effort for the PA. The sources of data included:

1) Historical archives;
2) Personal interviews;
3) Installation data repositories;
4) Visual survey; and
5) Off-site data sources and repositories, such as local libraries and museums.

These five sources of data are discussed below, along with their relative application to this PA.

4.1. Historical Archive Repositories (off-site)

The data collection team reviewed archival records located at the National Archives in College Park, Maryland, and in Washington, D.C., as well as the regional branches located in Philadelphia and New York City. The data collection team researched the following records and record groups (RG) for documents relating to munitions usage at NSWC Crane. Records marked with an asterisk (*) indicate boxes where pertinent information was identified and photocopied for use in the PA.

Textual Records:

RG 71, Bureau of Yards and Docks

Entry 12, General Correspondence, 1917-1925

Entry 13, General Correspondence re: Shore Establishments, 1916-1925

Entry 17, Index to General Correspondence, 1917-1925

Entry 21, Index to General Correspondence, 1925-1942

Entry 74, Blueprints of Naval Bases, 1940-1942

Entry 75, Drawings, 1898-1939, Vol.1, Vol.2, Box 1*

RG 72, Bureau of Aeronautics

Entry 62, General Correspondence, 1925-1942, Boxes 2797, 3842, 3843, 3844, 3845, 3920, 4014, 4019, 4020, 4036

Confidential Correspondence, 1922-1944, Box 1209

Entry 62-B, General Correspondence

1943-45, Boxes 2933, 2978, 2996, 3000, 3010, 3050, 3066*, 3078, 3385*, 3475

1946, Boxes 333, 416, 417, 418*, 419-426, 427*, 433, 436*, 437-438, 488*, 495, 503, 506, 509, 512, 513,

1947, Boxes 318, 363, 364, 365, 366*, 379*, 380, 405, 421, 426*, 430, 431, 434,

1948-1949, Boxes 371, 377*, 378*, 379, 430

1950, Box 199

1951, Boxes 163-164

1953, Boxes 242-243

1955, Boxes 193-194

1956, Boxes 184-185

1957, Boxes 192-193

1958, Box 147

RG 74, Bureau of Ordnance

Entry 25, General Correspondence, 1912-1926, Box 277*, 2317, 2318, 3087, 3093, 3112*, 3113*, 3142

Entry 25, General Correspondence, 1926-1944, Boxes 751, 754, 758*, 771, 777, 786, 787, 788*, 789*, 1060, 1078*, 1652

Entry 25-C, General Correspondence, Confidential, 1926-1939, Boxes 76, 638, 103

Entry 25-E, General Correspondence, Confidential, 1940-1942, Boxes 183, 192*

Entry 33, Index to General Correspondence, 1914-1926, Boxes 24, 33

General Correspondence, 1912-1926, Box 277*, 3112*, 3113*

Entry 33, Index to General Correspondence, 1926-1943, Boxes 21, 27

Entry1001, General Correspondence, 1907-1949, Boxes 8, 10, 11, 13, 14, 25, 26, 35-37, 51, 61, 62, 70*, 88, 101, 105, 106

Entry 1003 A-B, General Correspondence, 1948-1959, Boxes 584, 587

Construction and Procurement Files

1945, Boxes 1077*, 1190*, 1209*, 1220*, 1222, 1256*, 1257*, 1264, 1265, 1284*, 1285, 1390-1393, 1443*, 1444*, 1445*, 1446*, 1488*, 1489*, 1519-1539, 1600, 1643-1645, 1695-1696

1946, Boxes 193, 253*, 258, 265, 266, 280, 282, 289, 349*, 350*, 366*, 379*, 380*, 381*, 382*, 383*, 384*, 385*, 386*, 434*, 435

1947, Boxes 129, 188*, 199, 210*, 211, 263-265, 279*, 280, 288, 289*, 290*, 291*, 292, 330-331

RG 80, Secretary of the Navy

Entry 13, Spindle File, Letters Sent, 1918-1942, Boxes 115-118, 309, 352-353, 371-372

Entry 19, General Correspondence, 1897-1915, Boxes 1239-1241

Entry 19, General File, 1897-1926, #26395, 27280, 27812, 28332

Entry 22, General Correspondence, 1916-1926, Boxes 379, 680*, 681*, 682*, 1605, 1800, 1808, 1878*, 1879-1882, 2022, 2159, 2255*

Entry 22, General Correspondence, 1926-1940, Boxes 90,

Entry 22, General Correspondence, 1926-1944, Boxes 3071-3072, 3260

General Correspondence, 1940-1942, Box 833

Entry 130, Alphabetical File of the Assistant Secretary, 1921-1940, Box 4

Microfilm 1067, Index to General Correspondence of Secretary of Navy, 1930-1942, Rolls 29, 38, 63, 66, 90, 157

Microfilm 1052, General and Special Indexes to General Correspondence of Secretary of Navy, 1897-1926, Rolls 12, 13, 15, 24, 35, 36, 49, 62, 83, 100, 116, 119

RG 71, Bureau of Yards and Docks

Naval Property Case Files, Boxes 442, 443*, 444-450, 451*, 452

Unprocessed Naval Property Case Files, Boxes 31, 40

RG 72, Bureau of Aeronautics: [NT1-18]

Entry 62-B, General Correspondence, 1943-45, Boxes 2933, 2978, 2996, 3010, 3050, 3078, 3475

Entry 67, Confidential General Correspondence, 1922-1944, Box 1209

RG 74, Bureau of Ordnance

Entry 1001, General Correspondence, 1907-1949, Boxes 8, 10, 11, 13, 14, 25, 26, 35-37, 51, 61, 62, 70*, 88, 101, 105, 106

Entry 1003 A-B, General Correspondence, 1948-1959, boxes 584, 587

Entry 1529, Construction and Procurement Subject Files, 1945, Boxes 1519-1524, 1525*, 1526-1528, 1529*, 1530-1532, 1533*, 1534-1539

Entry 4444, Construction and Procurement Subject Files, 1946, Box 379*, 380*, 381*, 382*

Entry 1529, Construction and Procurement Subject Files, 1947, Boxes 289-291

Cartographic Records:

RG 71, Bureau of Yards and Docks

Maps for facility 903, codes 1, 2, 3, 15, 16, 32, 34, 42, 44-48

Series I microfilm, Roll 649.4*

RG 385, Naval Facilities Engineering Command, 1917-1989

Architectural and Engineering Plans, Boxes 223*, 224, 225*, 226*, 227, 228, 229, 230*

4.2. Personal Interviews

The data collection team visited the following offices located at NSWC Crane to interview representatives and research records related to the munitions/ordnance usage at the installation:

- Environmental Department
- Public Works Department
- Geographic Information Systems (GIS) Department
- Explosive Ordnance Disposal (EOD)
- Ordnance Test Group
- Explosive Safety Office
- Base Historian Office
- Public Affairs Office (PAO)
- Pyrotechnics Development Department

According to the personnel located at the installation, most people having specific knowledge regarding munitions activities at the sites identified within this report are either deceased or retired and un-locatable. The data collection team attempted to locate these individuals; however, none were found. A summary of the personnel interviewed and general information obtained from each office is presented below.

Environmental Department – The data collection team interviewed the Environmental Protection Specialist, Mr. Phil Keith. Mr. Keith has been employed at NSWC Crane for 19 years. He provided the team access to current installation maps along with various other environmental

information pertaining to areas within the installation. Mr. Keith also provided the team with a file that contained information pertaining to the testing that was conducted at the Test Pads on Hill Behind B-198. The file contained a document entitled "Special Job Procedure for testing of 2.75 –Inch Warhead at Test Site Behind Building 198". The project was to test newly developed 2.75-inch colored target markers. The file also contained military specifications for the dye materials that were being tested. In addition to this testing, the file indicated that M18 Smoke Hand Grenades were also simultaneously tested at the site. Mr. Keith was the POC for the Navy range inventory and the data collection portion of the PA.

Public Works and GIS Department – The data collection team interviewed the Environmental Protection Specialist, Mr. Thomas Brent. Mr. Brent has been employed at NSWC Crane for approximately 15 years. He provided the team access to various environmental documents and studies conducted throughout various areas of installation. Mr. Brent provided the team with electronic map files for the installation.

EOD – The data collection team interviewed Lieutenant Ron Zitzman. Lt. Zitzman, EOD Officer-in-Charge, has been stationed at NSWC Crane for 18 months. He provided the investigating team with several binders of EOD response records from fiscal years 2000 to 2003. However, these EOD response records did not provide any specific information related to the sites identified in this PA or any records of munitions/ordnance usage at the sites.

Ordnance Test Group – The data collection team interviewed Mr. Steve Schantz who had some knowledge of munitions/ordnance usage at the sites. Mr. Schantz is the Range Safety Officer at NSWC Crane and has been employed for numerous years. Site specific information received from Mr. Schantz is contained in the associated site sections of this report.

Explosive Safety Office – The data collection team interviewed the Explosive Safety Officer, Ms. Linda Stoll. She did not have any specific information related to the sites identified in this PA or any records of munitions/ordnance usage at the sites.

Base Historian Office – The data collection team interviewed the Base Historian, Mr. John Allen. Mr. Allen was born and raised in the area surrounding NSWC Crane and has been employed in a variety of positions at NSWC Crane for approximately the past 60 years. He provided the team with historical summaries and other useful information regarding the history of

NSWC Crane; however, he did not have any specific information regarding the types of munitions activities conducted at the sites.

PAO - The data collection team spoke with Ms. Sue Webster who oversees PAO at NSWC Crane. She did not have any specific information related to the sites or any records of munitions/ordnance usage at the site.

Pyrotechnics Development Department – The data collection team spoke with Dr. Bernie Douda, an engineer employed at NSWC Crane for over 50 years, regarding munitions/ordnance usage at the sites. Site specific information received from Dr. Douda is contained in the associated site sections of this report.

In addition to the offices listed above, the data collection team also interviewed individuals with knowledge regarding particular sites. Mr. Steve Shouse and Mr. John Brummett were interviewed to obtain information regarding the B-143 Drop Tower site. Mr. Shouse is currently an Engineering Technician at NSWC Crane, and Mr. Brummett is an employee in the Public Works Department. Site specific information received from these individuals is contained in the associated site sections of this report.

4.3. On-Site Data Repositories

There is no central data repository, such as a library or museum, located at the NSWC Crane except for continuing EOD response records; however, these records did not contain any information on explosive/munitions usage occurring at the site.

The base historian provided the data collection team with a copy of the book written by Mr. Robert L. Reid and Mr. Thomas E. Rodgers, entitled A Good Neighbor: The First Fifty Years at Crane 1941-1991. This book provided historical information pertaining to the installation.

A copy of the Preliminary Review/Visual Site Inspection Report was received from the Environmental Department to provide information pertaining to the environmental setting at the installation.

Various email correspondence relating to information regarding the sites was also received from the Environmental Department.

4.4. Visual Survey

The data collection team conducted a visual survey of each site/range as part of the data collection effort for the PA. The purpose of the visual survey was to identify any MEC related materials (e.g., expended rounds, fragmentation, range debris, old targets), any evidence of MC (such as ground scarring, stressed vegetation, or chemical residue) and/or surface features that could provide additional information to aid in the characterization of the site. The visual survey was also used to enhance, augment, or confirm the archival data and, in some cases, provide new data to the team. The sites identified in this PA were relatively small in acreage; therefore, 100% of the sites were visually surveyed unless otherwise identified in the respective site section.

4.5. Off-Site Data Sources

The data collection team contacted the following libraries and historical societies to obtain additional historical information regarding the site; however, no information was obtained pertaining to the identified sites.

- Indiana Historical Society
- Indiana State Library
- Bedford Public Library
- Bloomfield Library
- Shoals Public Library
- Martin County Historical Society

In addition, the data collection team reviewed archival records located at the Ordnance Explosives Support Office (OESO) Library at NSWC Indian Head, Maryland. OESO provides Navy-wide environmental program support for ordnance and munitions. The data collection team researched the files available for NSWC Crane, and the following sources were of value to this PA:

Textual Records:

Proposed Development Plan for Station, December 21, 1940

Chief of Bureau of Yards & Docks, July 14, 1941 indicating revisions of boundary lines.

Installation Assessment of NWSC Crane, Indiana, March 1978.

Cultural Resources Survey, Crane Division NSWC, Crane, Indiana, June 1992.

Environmental Impact Assessment, for Open Burning/Detonation of Waste Munitions/Propellant, August 1975.

Records Research On-Site Survey by OESO and the Army Records Research, Pollution Control Program, 1971.

List of Items to be Tested at: Ordnance Test Area, Rocket Range, B-198 R&D Test Area.

Geology and Hydrology Study for the Ammunition Burning Grounds October 1987.

Preliminary Review/Visual Site Inspection Report of Naval Weapons Support Center, Crane, Indiana. March 1987.

Maps:

NWSC Crane, Indiana, General Development Map, updated April 1974.

U.S. Naval Ammunition Depot Crane, Indiana, Production Areas Map.

The data collection team researched environmental information such as soil and endangered species information pertaining to the installation from the U.S. Department of Fish & Wildlife and the USDA. Historical and other environmental information was researched using the Internet. A complete list of Internet sources can be found in Appendix A.

5. SITE CHARACTERISTICS

The following sections provide site specific information about each of the sites located on NSWC Crane, including history and site description; land use; access controls and restrictions; visual survey observation and results; contaminant migration routes; and receptors.

5.1. B-143 DROP TEST

5.1.1. History and Site Description

The B-143 Drop Test is located in the central-western portion of NSWC Crane as shown in Map 2.1-1. The test area is southeast of Building 143 and north of Highway 45 in the Loading and Filling Area of NSWC Crane. The B-143 Drop Test is approximately 0.06 acres. The size of the test area was estimated based on the visual survey of the site. The footprint of the test area, as described by Mr. Shouse, was mapped during the site reconnaissance, and the mapped area was used to establish the 0.06-acre area indicated on Map 5.1-1: Visual Survey: B-143 Drop Test. This area differs from the 0.08-acres identified in the Navy Range Inventory. The 0.06-acre size of the B-143 Drop Test is used in this PA because it was field verified. The B-143 Drop Test is within a stand of trees south of Building 143, as shown in Figure 5.1-1. The site is separated from Building 143 by a grass area and small parking lot.

Figure 5.1-1: View of B-143 Drop Test

Mr. Shouse, an Engineering Technician at NSWC Crane, took part in the training at the B-143 Drop Test and was able to describe the training procedures. Mr. Brummett also provided a brief history of the site. In addition, Range Safety Officer, Mr. Schantz, had some knowledge of munitions/ordnance usage at the B-143 Drop Test. Mr. Schantz stated that the B-143 Drop Test was used to test Mark (MK) 118 Mod 0, Rockeye Bomblets. Mr. Keith provided copies of

correspondence regarding the historic use of the B-143 Drop Test. Mr. Brent indicated that the B-143 Drop Test is in the same general area as Solid Waste Management Unit (SWMU) 18/13, Loading and Filling Area Buildings. He indicated that they hope to investigate the B-143 Drop Test when SWMU 18/13 is investigated; however, no investigations have been conducted to date.

According to interviews with site personnel, the B-143 Drop Test was used from 1968 to 1980 for testing MK 118 Mod 0, Rockeye Bomblets. The test area consisted of three pieces: the 40-foot drop tower, the concrete drop pad, and the test building. The test building was approximately 15 feet square, and the smaller concrete drop pad was located adjacent to the building. The Rockeye Bomblets were pre-armed, and a vacuum tube was used to raise the bomblets to the top of the drop tower. The bomblets were then released from the vacuum tube. The concrete drop pad served as the impact area. All ordnance was removed after testing, with the exception of duds. According to Mr. Shouse, if a dud was encountered, testing ceased and EOD was contacted. There are no records of EOD responses for testing at the B-143 Drop Test; however, Mr. Shouse indicated that EOD was rarely needed. Testing stopped at the B-143 Drop Test in 1980 when the tower was relocated to the current OTA. Mr. Allen, base historian, indicated that the test facility closed because it had problems and needed repairs. No records were available indicating the specific problems or repairs needed. The test building and concrete drop pad were subsequently removed. There were no records to indicate when the test building and concrete drop pad were removed. The only evidence that remains of the test area is a slight depression in the vicinity of the former drop tower, concrete drop pad, and building. According to Mr. Shouse, the depression was created when the drop tower, concrete drop pad, and building were removed. Figure 5.1-2 shows the depression in the center of the trees.

Figure 5.1-2: Site of former B-143 Drop Test with Building B-143 in background

5.1.1.1.Topography

The B-143 Drop Test is located in the central-western portion of NSWC Crane. The site is located at the top of a ridge, which slopes to the southeast. The elevation of the site is approximately 650 feet, and the elevation at the base of the ridge is approximately 600 feet. Highway 45 and an un-named tributary to Boggs Creek are located at the base of the ridge.

5.1.1.2.Geology

There are no wells directly on the B-143 Drop Test; therefore, the specific geology of the site is unknown. A description of the regional geology can be found in Section 3.3.

5.1.1.3.Soil and Vegetation Types

The B-143 Drop Test is a lightly wooded area with young trees and sparse undergrowth, and leaf litter covers the site. The area between the site and Building 143 is grass covered; the remaining areas surrounding the site are wooded.

According to the Martin County Soil Survey, the Zanesville-Udorthents complex with two to six percent slopes (ZnB) is present at the B-143 Drop Test. These gently sloping, shallow to deep, well drained and moderately well drained soils are on the tops of ridges in the uplands. They are about 48 percent Zanesville soil and 42 percent Udorthents. The Zanesville soil and Udorthents soil occur as areas so intricately mixed that mapping them separately is not practical. The Zanesville soil has a moderate available water capacity, and the Udorthents soil has moderate permeability and available water capacity. Most areas of these soils are used as woodland, and some are used as grassland. Erosion and runoff are possible if cultivated crops are grown; however, the B-143 Drop Test is forested, so the site is less prone to erosion. The frost line in southern Indiana is approximately 2.5 feet bgs. Even though these soils contain fine grains, frost heave may not be a concern since the soils are very well drained.

5.1.1.4.Hydrology

The B-143 Drop Test is in the central drainage basin. Surface water runoff from the B-143 Drop Test drains into an un-named tributary approximately 500 feet south of the site. The un-named tributary empties into Boggs Creek. Boggs Creek eventually empties into the East Fork of the White River south of NSWC Crane.

5.1.1.5.Hydrogeology

There are no wells directly on the B-143 Drop Test; therefore, the specific hydrogeology of the site is unknown. A description of the regional hydrogeology can be found in Section 3.6.

5.1.1.6.Cultural and Natural Resources

Although the potential for cultural resources exists for the area in which the site is located, there have not been any archeological or cultural sites identified near the site. No records were found identifying specific cultural resources at the B-143 Drop Test in the Cultural Resources Survey from June 1992, nor were any sites identified on the Indiana Register of Historic Sites and Structures (State Register) or the National Register of Historic Places. No records identifying specific uses of the natural resources at the B-143 Drop Test were identified.

5.1.1.7.Endangered and Special Status Species

Threatened and endangered species for NSWC Crane are presented in Section 3.8. No evidence was found indicating the presence of the species listed at the B-143 Drop Test.

5.1.2. Visual Survey Observations and Results

A visual survey of the B-143 Drop Test was conducted on March 18, 2003. The Malcolm Pirnie survey team included Ms. Denise Tegtmeyer, Mr. Svend Egholm, Mr. Bill Walenius, and Mr. Brummett of NSWC Crane. The survey team also included Mr. Shouse who took part in the training at the B-143 Drop Test and was able to describe the testing procedures and site set-up. The survey team was able to walk 100% of the area. The footprint of the test area, as described by Mr. Shouse, was mapped during the site reconnaissance. The site was mapped by walking a perimeter of the site as described by Mr. Shouse. The total area surveyed by the team was approximately 0.06 acres. The area covered is shown in Map 5.1-1.

According to Mr. Shouse, the B-143 Drop Test consisted of three pieces: the 40-foot drop tower, the concrete drop pad, and the test building. The only evidence that remains of the test area is a slight depression in the vicinity of the former drop tower, concrete drop pad, and building. According to Mr. Shouse, the depression was created when the drop tower, concrete pad, and building were removed. At the time of the site visit, the depression was covered with fallen leaves. The depression is located in a clearing at the center of a lightly wooded area with young trees and sparse undergrowth (Figure 5.1-3). No other evidence of the former building and drop test impact area was present. During the site visit, no evidence of munitions testing was observed at the site, and no evidence of MEC remaining at the site was identified.

Figure 5.1-3: Survey team standing in the clearing at the B-143 Drop Test.

A visual depiction of the site reconnaissance is provided on located at the end of Section 5.1. Additional range/site details are illustrated on Map 5.1-2 also located at the end of Section 5.1.

5.1.3. Munitions and Munitions Related Materials Associated with the Site

This section describes the munitions or munitions related materials known or suspected to be at the site, including the types and estimated maximum penetration depths. This includes both MEC and non-hazardous munitions related scrap (e.g., fragmentation, base plates, inert mortar fins).

According to interviews with installation personnel, only U.S. Bomb, Antitank, MK 118 Mod 0, also referred to as Rockeye Bomblets, were used at the B-143 Drop Test. The data collection team was unable to locate specific records of the quantities of munitions tested at the former B-143 Drop Test.

The MK 118 Rockeye Bomblets, Mod. 0 are submunitions. Submunitions are defined as any ordnance dispensed from a larger carrier, such as a projectile, rocket warhead, or a dispenser dropped from aircraft. The Rockeye Bomblets would be dropped from a dispenser, such as the U.S. Dispenser, Air-Launched, Free-Fall, MK 7 Mods 2, 3, 4, and 6. The main charge in the

Rockeye Bomblets is 170 grams of Octol or 181 grams of Composition B, and the booster is 5 grams of tetryl. The base fuze element is less than 1 gram of lead azide.

An inert bomblet, containing a live fuze but no main explosive charge, is used for reliability testing and establishing delivery tactics. It is assumed that only inert bombs with live fuzes were tested at the B-143 Drop Test. This assumption is based on the following: 1) the close proximity of Buildings 143, 99, 100, 186, and 2870 (approximately 35 meters); 2) the use of a concrete pad as an impact area; and 3) interviews with site personnel. The fragmentation zone, for a M118 inert bomblet with a live fuze containing less than one gram of explosives is 163-meters in diameter. The fragmentation radius is based on the minimal fragmentation distance for up to a half pound of explosives. MEC and MC are not expected in the fragmentation radius. The fragmentation radius is indicated on Map 5.1-2.

Based on the information obtained during the data collection process, no special consideration munitions [Chemical warfare materiel (CWM) filled munitions, electrically fuzed munitions, depleted uranium (DU) associated munitions] are known or suspected to have been used at the site; therefore, the B-143 Drop Test is not suspected to contain special consideration MEC.

Additional technical information about this ordnance type is included in Appendix D.

5.1.4. MEC Presence

The entire site has been subdivided and categorized into one of three levels of MEC presence including: Known MEC Areas, Suspect MEC Areas, and Areas where No Evidence exists to indicate that MEC is known or is suspected to be at the site. The MEC presence is discussed below.

Map 5.1-3 illustrates the munitions characterization of the B-143 Drop Test and is provided at the end of Section 5.1.

5.1.4.1.Known MEC Areas

There are no known MEC areas associated with the site.

5.1.4.2.Suspected MEC Areas

There are no areas at the B-143 Drop Test suspected to contain MEC.

5.1.4.3.Areas Not Suspected to Contain MEC

The entire 0.06-acre B-143 Drop Test is a not suspected to contain MEC. The fragmentation zone, 163-meter diameter, for the drop tower is not a suspected MEC area based on the procedures at the site during testing and the results of the visual survey. Map 5.1-3 illustrates the Not Suspect MEC Area associated with the B-143 Drop Test.

5.1.5. Ordnance Penetration Estimates

The depth to which munitions penetrate below the ground surface depends on many factors, including the type of soil, the angle of impact, the size of the munitions, the velocity at impact, and site specific environmental conditions. Over the years, the DoD has studied and modeled munitions penetration depths and has issued various guidance and technical documents on the subject. For the purposes of the PA, maximum probable penetration depths are estimated following guidance listed in the latest draft (July 2002) of the DoD Directive on Explosives Safety issued by the DoD Explosives Safety Board [*DoD Directive 6055.9* (*DoD Ammunition and Explosives Safety Standards*)]. The Directive refers to *TM 5.855.1* and *NAVFAC P-1080*.

Since the Rockeye Bomblets were dropped on a concrete pad, it is not expected that they penetrated the soil. No records were discovered that indicate whether or not any Rockeye Bomblets missed the concrete pad and impacted the adjacent soil.

5.1.6. Munitions Constituents

MC associated with the type of munitions known to have been used at the B-143 Drop Test include minimal amounts of metals, Octol, and Composition B. Heavy metals would be present in the Rockeye Bomblet casing, and the Octol or Composition B would be present in the explosive component of the Rockeye Bomblet. The booster is 5 grams of tetryl, and the base fuze element is less than 1 gram of lead azide. Octol is a mix of Cyclotetramethylenetetranitramine (75%) and Trinitrotoluene (TNT) (25%). It is a solid buff colored, castable explosive used in high explosive shells and as the filler for bombs. Composition B is a mixture of Hexahydro-

Trinitro-Triazine (RDX), TNT, and beeswax. Composition B contains 60% RDX and 40% TNT, exclusive of wax. Composition B is an authorized filler for Navy standard aircraft bombs, mines, torpedoes, antitank artillery shells, demolition charges, and in rockets.

MC has not been investigated at this site. However, MC are not anticipated to be present at the site due to the minimal amounts of MC associated with the munitions used at the B-143 Drop Test. MC at the site is also limited because the concrete pad was removed from the site, and the MC would have been concentrated on the concrete pad.

5.1.7. Contaminant Migration Routes

Studies have shown that ordnance can migrate due to environmental factors, such as frost heave or erosion. The Rockeye bomblets that were tested at the site were dropped on a concrete pad, so the majority of MEC and MC would have been concentrated on the concrete pad. The concrete pad has been removed from the site. . If MEC were present at the site, it would only be located within surface soils (less than two feet bgs), which is above the frost heave line at the site. Therefore, it is unlikely that the MEC would migrate into the subsurface.

If MC are present at the site, they would migrate via soil and groundwater. If MC remains at the site, it would be present in the surface soil. Since the soils present at the site are well drained and moderately well drained soils, contaminants could leach from the soil to the groundwater. Even though these soils contain fine grains, frost heave may not be a concern since the soils are very well drained. Since the depth to groundwater and groundwater flow paths at the site are unknown, the specific contaminant migration route for MC in the groundwater is unknown. Surface water is not considered a contaminant migration route because no surface water bodies are present at the site.

5.1.8. Receptors

The MEC exposure pathway for both human and ecological receptors for the B-143 Drop Test is surface soil (zero to two feet). MEC receptors include Navy personnel, contractors, authorized visitors, trespassers, and hunters that may walk on the site. Wildlife, such as deer, rabbits, raccoons, and wild turkeys, could come into contact with MEC at the site. See Section 5.1.4 for details on the likelihood of MEC at the site.

The MC exposure pathways for both human and ecological receptors for the B-143 Drop Test are the food chain and surface soil (zero to two feet). Human receptors would be affected through direct dermal contact, ingestion, or inhalation of soils. Human receptors could also contact contaminants through the food chain, as hunting is permitted at NSWC Crane and contaminants may bioaccumulate in animals. Navy personnel are the most likely to have repeated and lengthy exposures, where as trespassers and visitors will have a diminished duration or limited frequency of exposure to MC in the surface soil or biota. Ecological receptors of contaminants include plant and animal life living on or near the site. Vegetation, such as grass, within the area is eaten by wildlife, such as deer, wild turkey, rabbits, raccoons, and birds. Endangered and threatened species that would visit the site include the bald eagle, which has a large hunting range, limiting its exposure at the site. Routes of exposure would include dermal contact, ingestion of soil, or ingestion of soil eating invertebrates. Plant uptake is mostly limited to near surface adsorption through the root systems. There is no known use of groundwater at the installation, so groundwater receptors are not included in this analysis. See Section 5.1.6 for details on the likelihood of MC at the site.

5.1.8.1. Nearby Populations

NSWC Crane makes up the majority of Martin County. The rest of Martin County is essentially rural with some residential areas surrounding NSWC Crane. Martin County has a population of 10,383, which comprises 0.16 percent of the state's population. The population per square mile in Martin County is 30.9. NSWC Crane is the second largest employer in southwest Indiana with over 3,400 Navy employees and over 550 Army employees. A Combined Bachelors Quarters (approximately 36 rooms) and family housing (approximately 30 units) are located at NSWC Crane.

5.1.8.2.Buildings Near/Within Site

The B-143 Drop Test is located south of Building 143. Building 143 is currently used for small ordnance component testing. The B-143 Drop Test is separated from Building 143 by approximately 50 feet of grass and 50 feet of pavement. Additional Navy Ordnance Department buildings (Buildings 99, 100, 186, and 2870) are located south of Building 143. No buildings or structures are located within the perimeter of the site.

5.1.8.3.Utilities On/Near Site

The nearby buildings and facilities have utilities; however, it is not known whether underground utilities exist at the site. NSWC Crane did not have utility maps available for review. The Public Works Department indicated that no maps were available and field verification of utilities would be required.

5.1.9. Land Use

Since the drop testing structures have been removed, the site has remained undeveloped and is currently covered with trees and leaf litter. No anticipated change in land use of the adjacent areas is anticipated.

5.1.10. Access Controls / Restrictions

Access to the NSWC Crane is restricted. The NSWC Crane property is surrounded by locked, secured gates, with security at all entrances, as well as a security patrol. There are no access controls or restrictions in place to limit access to the B-143 Drop Test area once on the installation. Navy personnel, contractors, and visitors are not specifically restricted from the former test area. There is a cliff directly south of the site, so access to the site from the south is limited. There are no known zoning/land use restrictions for the B-143 Drop Test.

5.1.11. Conceptual Site Model

This Conceptual Site Model (CSM) was developed following guidance documents issued by the USEPA for hazardous waste sites and the U.S. Army Corps of Engineers (USACE) for ordnance and explosives (OE) sites. Guidance documents included the USEPA's Guidance for Conducting Remedial Investigations and Feasibility Studies under CERCLA (EPA/540/G-89/004) and the USACE CSM Guidance Development of Integrated Conceptual Site Models for Environmental Ordnance and Explosives (OE) Sites, which was final as of February 2003.

The CSM describes the site and its environmental setting. The CSM presents information regarding: 1) MEC and/or MC known or suspected to be at the site; 2) current and future reasonably anticipated or proposed uses of the real property; and 3) actual, potentially complete, or incomplete exposure pathways that link them. The CSM is the basis for the risk evaluation, prioritization, and remediation cost estimate.

The CSM is presented in a series of information profiles that presents information about the site. The information profiles are included in Table 5.1-1

Table 5.1-1: Conceptual Site Model Information Profiles – B-143 Drop Test

Profile Type	Information Needs	Preliminary Assessment Findings
Range/Site Profile	Installation Name	NSWC Crane
	Installation Location	Crane, Martin County, Indiana
	Range/Site Name	B-143 Drop Test
	Range/Site Location	South of Building 143
	Range/Site History	Used for testing Rockeye bomblets from 1968 to 1980.
	Range/Site Area and Layout	Approximately 0.06 acre
	Range/Site Structures	Formerly contained a concrete drop pad, 40-foot drop tower, and building. The tower was transferred to the current OTA, and the concrete pad and building have been removed.

5.1.8.2. Buildings Near/Within Site

The B-143 Drop Test is located south of Building 143. Building 143 is currently used for small ordnance component testing. The B-143 Drop Test is separated from Building 143 by approximately 50 feet of grass and 50 feet of pavement. Additional Navy Ordnance Department buildings (Buildings 99, 100, 186, and 2870) are located south of Building 143. No buildings or structures are located within the perimeter of the site.

5.1.8.3. Utilities On/Near Site

The nearby buildings and facilities have utilities; however, it is not known whether underground utilities exist at the site. NSWC Crane did not have utility maps available for review. The Public Works Department indicated that no maps were available and field verification of utilities would be required.

5.1.9. Land Use

Since the drop testing structures have been removed, the site has remained undeveloped and is currently covered with trees and leaf litter. No anticipated change in land use of the adjacent areas is anticipated.

5.1.10. Access Controls / Restrictions

Access to the NSWC Crane is restricted. The NSWC Crane property is surrounded by locked, secured gates, with security at all entrances, as well as a security patrol. There are no access controls or restrictions in place to limit access to the B-143 Drop Test area once on the installation. Navy personnel, contractors, and visitors are not specifically restricted from the former test area. There is a cliff directly south of the site, so access to the site from the south is limited. There are no known zoning/land use restrictions for the B-143 Drop Test.

Table 5.1-1: Conceptual Site Model Information Profiles – B-143 Drop Test

Profile Type	Information Needs	Preliminary Assessment Findings
	Range/Site Boundaries	N: Building 143 S: Highway 45 W: Building 154 E: Building 2798
	Range/Site Security	The installation is fenced; however the B-143 Drop Test area is not fenced.
Munitions/ Release Profile	Munitions Types	Rockeye bomblets (MK 118 Mod 0)
	Maximum Probability Penetration Depth	Bomblets were dropped on a concrete pad, and munitions are not expected to have penetrated below the ground surface.
	MEC Density	Minimal range related debris is expected to be at the site based upon the Navy operating procedures to collect and remove related debris immediately after testing.
	MEC Scrap/Fragments	None found during site visit.
	Associated Munitions Constituents	Minimal amounts of metals, Octol, and Composition B
	Migration Routes/Release Mechanisms	If MC were present at the site, it would only be located within surface soils (less than two feet bgs). MC are not anticipated to be present at the B-143 Drop Test; however, if MC are present at the site they may migrate via soil and groundwater.
Physical Profile	Climate	Temperate climate zone, which has a wide temperature range between summer and winter
	Topography	The site is located at the top of a ridge, which slopes to the east. The elevation of the site is approximately 650 feet, and the elevation at base of the ridge is approximately 600 feet.
	Geology	The area is located on the eastern flank of the Illinois Basin consisting of shale, sandstone, limestone, and coal beds. The specific geology of the site is unknown.
	Soil	Zanesville-Udorthents complex with two to six percent slopes (ZnB) is present at the B-143 Drop Test. These soils are gently sloping, shallow to deep, well drained and moderately well drained.
	Hydrogeology	Specific hydrogeology of the site is unknown.

Table 5.1-1: Conceptual Site Model Information Profiles – B-143 Drop Test

Profile Type	Information Needs	Preliminary Assessment Findings
	Hydrology	B-143 Drop Test is within the central drainage basin of NSWC Crane. Surface water runoff from the B-143 Drop Test drains into an un-named tributary approximately 500 feet south of the site. The un-named tributary empties into Boggs Creek. Boggs Creek eventually empties into the East Fork of the White River south of NSWC Crane.
	Vegetation	The area is covered with sparse trees and shrubs, and the surrounding area is grass covered or parking lot.
Land Use and Exposure Profile	Current Land Use	The area is currently undeveloped.
	Current Human Receptors	Naval personnel, contractors, trespassers, and authorized visitors
	Current Activities (frequency, nature of activity)	No activity currently at the site.
	Potential Future Land Use	No change in land use is expected.
	Potential Future Human Receptors	Naval personnel contractors, trespassers and authorized visitors
	Potential Future Land Use-Related Activities:	No future land use is expected.
	Zoning/Land Use Restrictions	No known zoning/land use restrictions
	Demographics/Zoning	NSWC Crane employs approximately 4,000 personnel, both civilian and military. Martin County has a population of 10,383, which comprises 0.16 percent of the state's population. The population per square mile in Martin County is 30.9.
	Beneficial Resources	The NSWC Crane forest has been important to the re-establishment of deer, turkey, ruffed grouse and eagles in Indiana. Timber is also harvested at NSWC Crane.
Ecological Profile	Habitat Type	Woodlands
	Degree of Disturbance	If current conditions continue, the degree of disturbance at the site will be low. Low – Site is/will be unused; habitat and species present are/will be undisturbed (i.e., undisturbed grassland and forest).
	Ecological Receptors	

Table 5.1-1: Conceptual Site Model Information Profiles – B-143 Drop Test

Profile Type	Information Needs	Preliminary Assessment Findings
	Federal Endangered Species:	No federal endangered species are known at the site.
	Federal Threatened Species:	The Bald Eagle *(Haliaeetus leucocephalus)* could be located at the site based on the large hunting range of the eagle.
	State Endangered Species:	The potential for the Grasshopper sparrow, bobcat, osprey, timber rattlesnake, and yellow-crowned night heron exists; however, none have been identified at the site.
	State Threatened Species:	The Bald Eagle (Haliaeetus leucocephalus) could be located at the site based on the large hunting range of the eagle.
	Other Ecological Receptors:	The habitat at the site and the surrounding area is home to many woodland wildlife species, such as deer, rabbits, raccoons, and wild turkeys. There is potential for the wildlife to burrow, forage, and nest on site. Since parts of the installation are open for hunting, the potential exists for deer and wild turkey to be present on site.
	Relationship of MEC/MC Sources to Habitat and Potential Receptors	Ecological receptors may come into direct contact with MEC/MC (in soil or on the surface), if present. Wildlife that inhabit or utilize the area may come into contact with MC that has been incorporated into the food chain (bio-accumulated in plants and animals). Ecological receptors contacting MEC and creating an explosive hazard is not likely but should be considered.

A key element of the CSM is the exposure pathway analysis. For MEC, a complete or potentially complete exposure pathway must include the following components: 1) a source (e.g., locations where MEC are expected to be found); 2) access (e.g., controlled or uncontrolled access, items on the surface or within the subsurface); 3) an activity (e.g., non-intrusive grounds maintenance or intrusive construction); and 4) receptors (e.g., Navy personnel, construction workers, recreational users, authorized visitors, or trespassers). It is important to recognize that environmental mechanisms (e.g., erosion) and/or human intervention may result in the repositioning of MEC.

For MC, a complete or potentially complete exposure pathway must include the following components: 1) a source (e.g., locations where MC are expected to be found); 2) an exposure medium (e.g., surface soil); 3) an exposure route (e.g., dermal contact); and 4) receptors (e.g.,

Navy personnel, construction workers, recreational users, authorized visitors, or trespassers). If the point of exposure is not at the same location as the source, the pathway may also include a release mechanism (e.g., volatilization) and a transport medium (e.g., air).

The interactions between the source and receptors are assessed differently between MEC and MC. For MC, interaction between the source and receptors involves a release mechanism for the MC, an exposure medium that contains the MC, and an exposure route that places the receptor into contact with the contaminated medium. For MEC, interaction between the receptors and an MEC source has two components. The receptor must have access to the source and must engage in some activity that results in contact with individual MEC items within the source area.

MEC and MC exposure pathway analyses were not created for the B-143 Drop Test because MEC and MC sources are not anticipated at the site. The concrete pad, drop tower, and building used during testing at the B-143 Drop Test have been removed from the site. In addition, an interview with Steve Shouse stated that all visible MEC debris was removed from the site after testing. Since one of the key components for the exposure pathway analysis, the source, is missing, an exposure pathway is not present at the site.

A graphical illustration of the CSM is not included for the B-143 Drop Test because the location of the associated drop tower, concrete pad, and building are unknown.

5.1.12. Summary

The history of the B-143 Drop Test dates from 1968 to 1980. The site was used for testing MK 118 Rockeye Bomblets from the former drop tower. No evidence was observed indicating MEC on the surface at the B-143 Drop Test. Although ordnance is possible at the site, there is no evidence to support MEC presence at the B-143 Drop Test. It was Navy policy at the time to remove ordnance from the test pad after testing. However, no records were found to document removals of duds at the site. MC associated with the types of munitions known to have been used at the B-143 Drop Test include minimal amounts of heavy metals in the Rockeye Bomblet casing, and Octol or Composition B in the explosive component of the Rockeye Bomblet. MC are not anticipated to be present at the site due to the minimal amounts of MC associated with the munitions themselves and because the concrete pad was removed from the site. No investigations for MEC or MC have been conducted at the B-143 Drop Test.

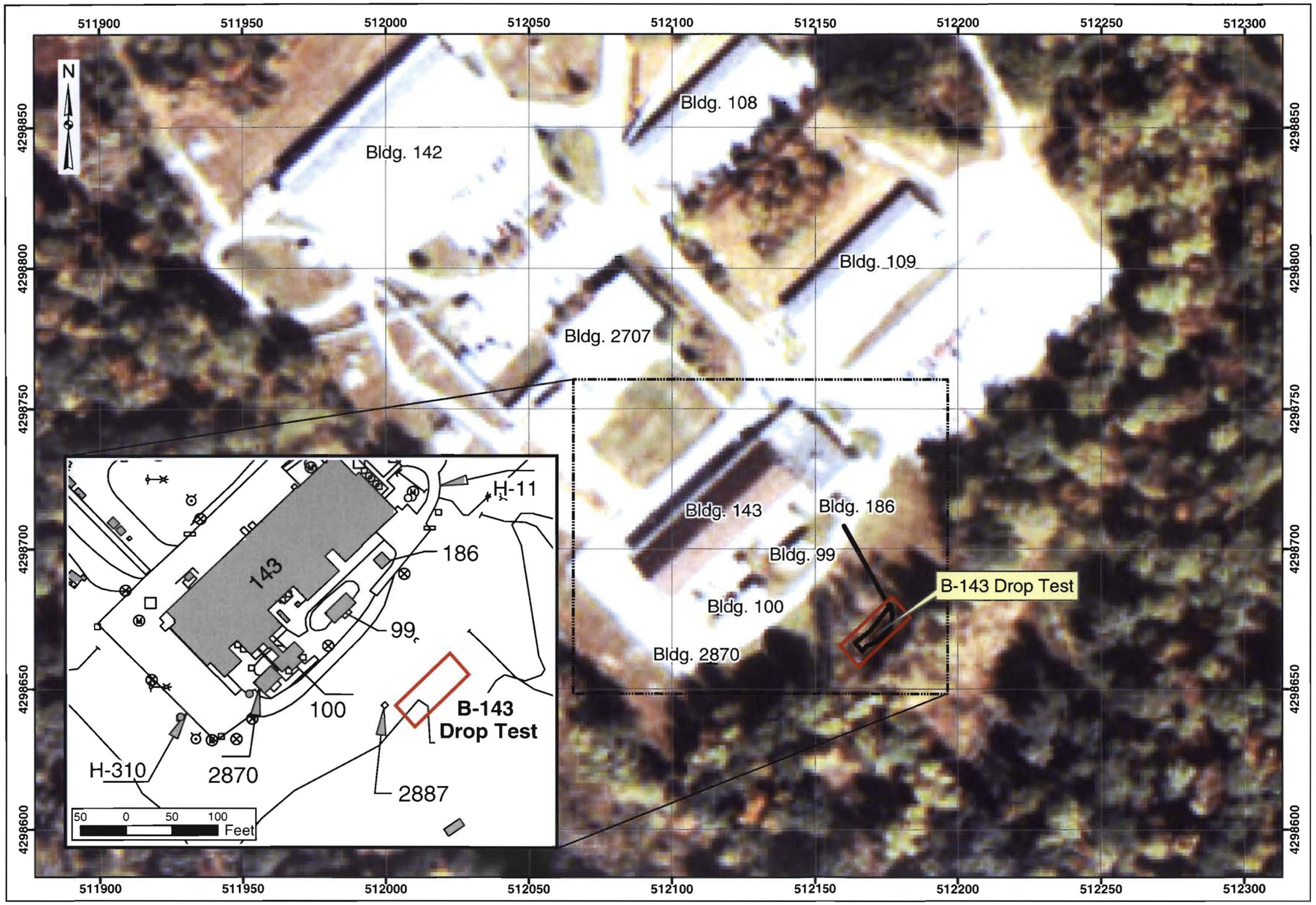

Preliminary Assessment
NSWC Crane, Indiana

MALCOLM PIRNIE

Map 5.1-1
Visual Survey
B-143 Drop Test

Legend

- Installation Boundary
- Site Reconnaissance
- B-143 Drop Test

Site Reconnaissance path is approximate

20 0 20 40 60 Meters

Data Source: 1998 Aerial Photography; NSWC Crane CAD; NSWC Crane

Coordinate System: UTM Zone 16N
Datum: NAD 83
Units: Meters

Contract: N62472-02-D-1300
Edition: Revised Draft Final Preliminary Assessment
Date: May 2004

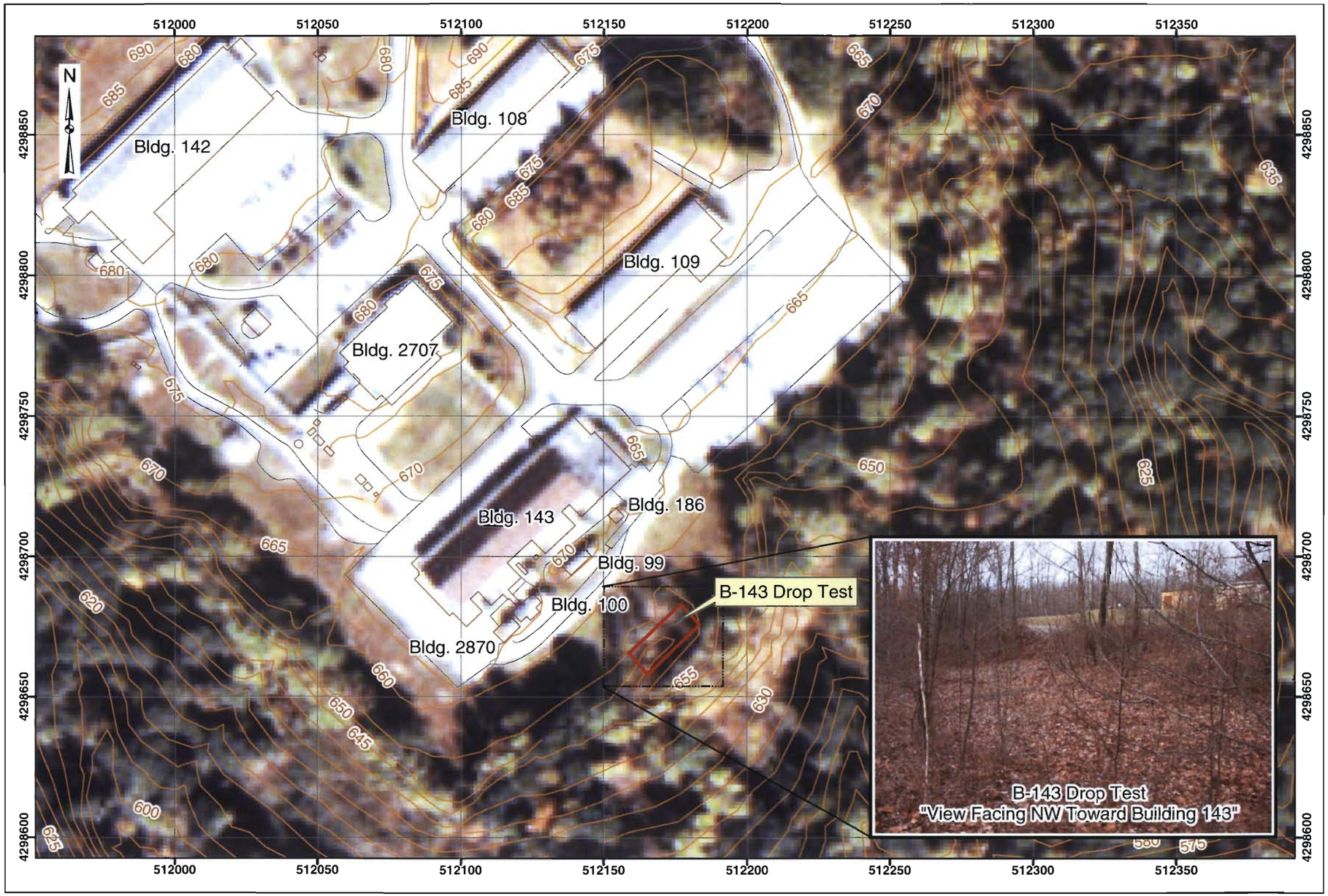

Preliminary Assessment
NSWC Crane, Indiana

MALCOLM PIRNIE

Map 5.1-2
Range/Site Details
B-143 Drop Test

Legend

- Installation Boundary
- Structures
- Roads
- Contours
- B-143 Drop Test

20 0 20 40 60 Meters

Data Source: 1998 Aerial Photography; NSWC Crane CAD; NSWC Crane

Coordinate System: UTM Zone 16N
Datum: NAD 83
Units: Meters

Contract: N62472-02-D-1300
Edition: Revised Draft Final Preliminary Assessment
Date: May 2004

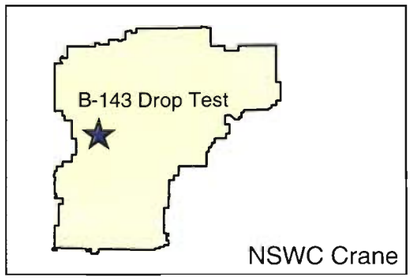

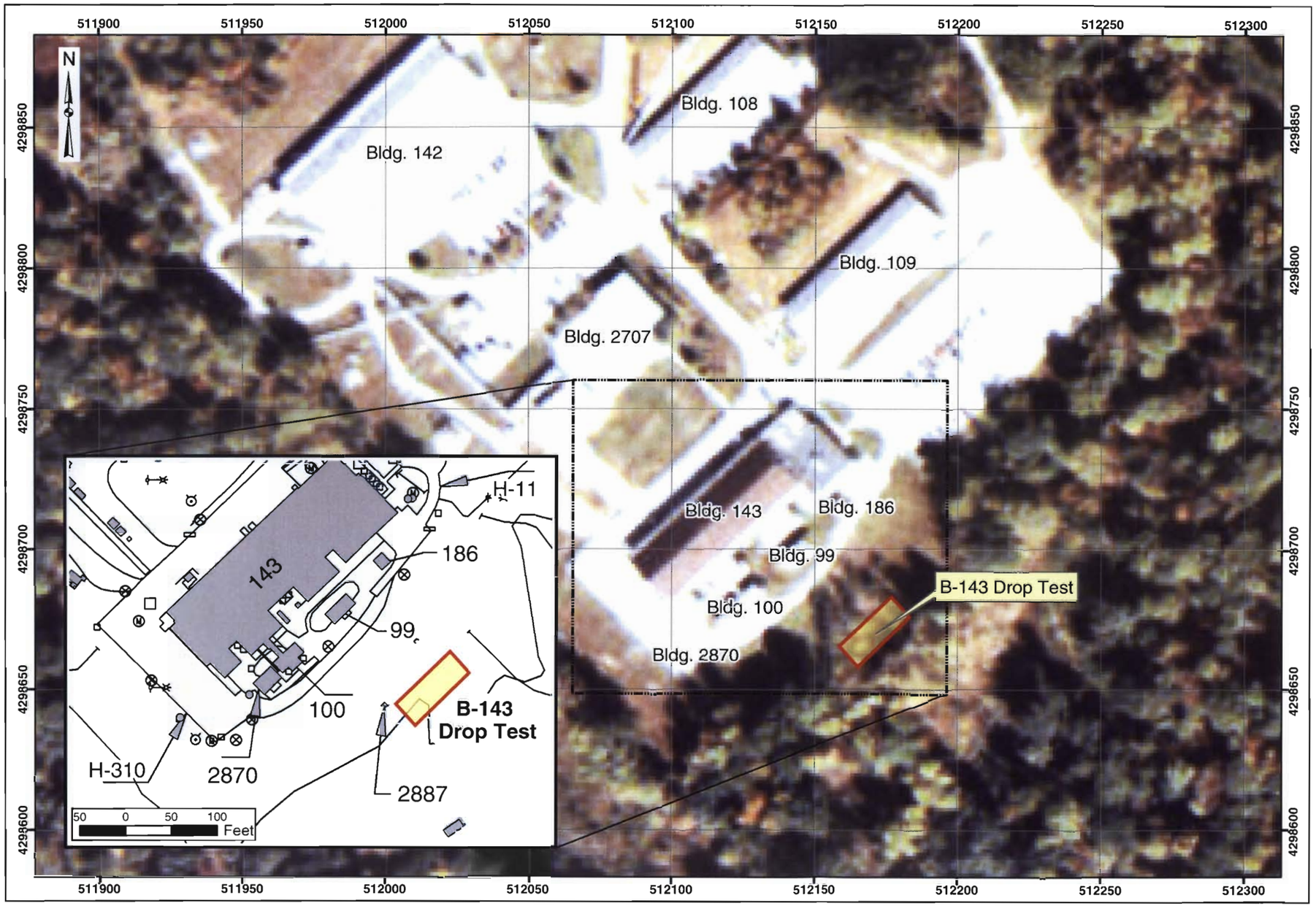

Preliminary Assessment
NSWC Crane, Indiana

MALCOLM PIRNIE

Map 5.1-3
Munitions Characterization
B-143 Drop Test

Legend

Installation Boundary

B-143 Drop Test

MEC Presence

Known

Suspect

MEC Presence was determined through review of historical documentation, interviews, and/or visual survey.

20 0 20 40 60 Meters

Data Source: 1998 Aerial Photography; NSWC Crane CAD; NSWC Crane

Coordinate System: UTM Zone 16N
Datum: NAD 83
Units: Meters

Contract: N62472-02-D-1300
Edition: Revised Draft Final Preliminary Assessment
Date: May 2004

5.2. B-2044 DROP TOWER/TEST RAIL

5.2.1. History and Site Description

The B-2044 Drop Tower/Test Rail were used from January 1951 through December 1973. The area was used for the drop testing of 20-mm cartridges and ejection seat testing using CADs/PADs on the test rail. The B-2044 site consists of a drop tower approximately 100 feet tall and a test rail approximately 97 feet in length. Figure 5.2-1 is a photograph of the drop tower, taken from the south, near Building 2812, facing north. The concrete pad is on the left side of the tower. Figure 5.2-2 is a photograph of the test rail and nearby buildings. In the forefront of the picture is a structure, identified as Building 2820 on NSWC Crane facility maps, with an open west wall that was used for prepping test materials. Behind building 2820 is an unnamed white building used for storage of test materials. The photograph is taken from the west side of the rail, facing to the east. The B-2044 Drop Tower/Test Rail is located to the southeast of Building 2044 and to the east of Building 2762. This site was identified during the in-brief by Mr. Schantz and Mr. Keith. Historical maps delineating this site have not been identified. However, documents have been identified that note the testing of items at the site. The footprint of the B-2044 Drop Tower/Test Rail was mapped during the site reconnaissance, and the mapped area was used to establish the 0.013-acre area indicated on Map 5.2-1. This area differs from the 0.004-acres identified in the Navy Range Inventory. The 0.013-acre size of the B-2044 Drop Tower/Test Rail is used in this PA because it was field verified.

Figure 5.2-1 View of Drop Tower

Figure 5.2-2: View of Test Rail

5.2.1.1.Topography

The B-2044 Drop Tower/Test Rail is located on a hilly area at an elevation of approximately 790 feet. The area surrounding the site slopes upward to the northwest to an elevation of 810 feet. To the southeast, the land slopes downward into a valley to an elevation of 750 feet.

5.2.1.2.Geology

There are no wells directly on B-2044 Drop Tower/Test Rail; therefore, the specific geology of the range is unknown. A description of the regional geology can be found in Section 3.3.

5.2.1.3.Soil and Vegetation Types

The B-2044 Drop Tower/Test Rail site is a lightly wooded area with young trees and sparse undergrowth, and leaf litter covers the site. The area immediately surrounding the test rail and the drop tower is grass covered. The east and south sides of the site are wooded.

According to the Martin County Soil Survey, the soil type present at the B-2044 Drop Tower/Test Area consists of Zanesville Udorthents Complex, 6 to 12% slopes (ZnC). These moderately sloping, shallow to deep, well drained and moderately drained soils are on the tops of ridges in the uplands. The Udorthents are in areas that have been affected by earth moving activities. They are about 50 percent Zanesville and 40 percent Udorthents. The Zanesville soil and Udorthents soil occur as areas so intricately mixed that mapping them separately is not practical. The Zanesville soil has a moderate available water capacity, and the Udorthents soil has moderate permeability and available water capacity. Most areas of these soils are used as woodland, and some are used as grassland. These soils are poorly suited to cultivated crops. Erosion and runoff are possible if cultivated crops are grown; however, the B-2044 site is partially forested, making it less prone to erosion. The frost line in southern Indiana is approximately 2.5 feet bgs.

5.2.1.4.Hydrology

The B-2044 Drop Tower/Test Rail is located within the central portion of the installation and lies within the central drainage basin. Surface water runoff from the site drains south into an un-named tributary, which flows southwest into Boggs Creek. Boggs Creek eventually empties into the East Fork of the White River south of NSWC Crane.

5.2.1.5.Hydrogeology

There are no wells directly on the B-2044 Drop Tower/Test Rail; therefore, the specific hydrogeology of the site is unknown. A description of the regional hydrogeology can be found in Section 3.6.

5.2.1.6.Cultural and Natural Resources

Although the potential for cultural resources exists for the area in which the site is located, there have not been any cultural sites identified near the B-2044 Drop Tower/Test Rail. There are no records identifying specific uses of natural resources located at the B-2044 Drop Tower/Test Rail.

5.2.1.7.Endangered and Special Status Species

Threatened and endangered species for NSWC Crane are presented in Section 3.8. No evidence was found indicating the presence of the species listed at the B-2044 Drop Tower/Test Rail.

5.2.2. Visual Survey Observations and Results

A visual survey of the B-2044 Tower/Test Rail was conducted on March 17, 2003. The Malcolm Pirnie survey team included Mr. Hien Dinh, Ms. Molly Howard, Ms. Julie Grim, and Mr. Terry Stark. Mr. Keith of NSWC Crane accompanied the team. Mr. Keith was knowledgeable of testing that occurred at the site and identified features at the site. During the site walk, the team did not observe any evidence of MEC or MC related debris at the B-2044 Drop Tower/Test Rail. There were no noticeable depressions in the land surrounding the testing sites and the surface cover was intact. The total area surveyed by the team was approximately 0.013 acres, as shown in Map 5.2-1.

According to Mr. Keith, 20mm cartridges were dropped from the top of the tower onto a concrete pad at the bottom of the tower. Mr. Keith stated that the concrete pad has never been replaced. The cartridges exploded upon impact; however, no visible markings were noticed on the concrete pad. Figure 5.2-3 is a photograph of the concrete pad below the drop tower. The drop tower is approximately 100 feet in height. The test rail is located to the south of the drop tower and runs across the site in an east to west direction. The test rail is 97 feet in length. According to Mr. Keith, it was used to test CADs and PADs that were present in ejection seats. Also existing on the site are two concrete structures used for the storage and preparation of test materials. The unnamed white structure was a storage area for materials. The easternmost structure, identified as Building 2820 on Map 5.2-1, is not enclosed and is open on

Figure 5.2-3: Concrete Impact Pad of Drop Tower

the western side of the building. The test materials were prepared in B-2820. During the site walk, there were no visible signs of the testing that had occurred, and both the test rail and drop tower were intact.

A visual depiction of the site reconnaissance is provided on Map 5.2-1 located at the end of Section 5.2. Additional range/site details are illustrated on Map 5.2-2 also located at the end of Section 5.2.

5.2.3. Munitions and Munitions Related Materials Associated with the Site

This section describes the munitions or munitions related materials known or suspected to be at the site, including the types and estimated maximum penetration depths. This includes both MEC and non-hazardous munitions related scrap (e.g., fragmentation, base plates, inert mortar fins).

The data collection team was unable to locate specific records of the types and quantities of cartridges tested at the B-2044 Drop Tower/Test Rail. Interviews with installation personnel indicated that the following types of munitions were tested at the B-2044 Drop Tower/Test Rail:

- 20-mm cartridges
- M21, CAD
- M447 PAD

A CAD such as the M21 reefing line cutter is a cartridge actuated, one shot, disposable mechanical unit with the cartridge sealed internally. Major components consist of a case, firing pin assembly, lanyard, knife assembly, delay assembly and cotter pin. A PAD is used to provide stabilization and improve trajectories of the seat escape system. Airborne testing of PADs and CADs was conducted on the rail.

A 20mm cartridge is an assembly of cartridge case, primer, a quantity of propellant within the cartridge case, and a bullet or projectile. The fragmentation zone has a radius of 163-meters, for a 20mm cartridge containing less than one gram of explosives. The fragmentation radius is based on the minimal fragmentation distance for up to a half pound of explosives. MEC and MC are not expected in the fragmentation radius. The fragmentation radius is indicated on Map 5.2-2.

Technical information about these ordnance types is included in Appendix D.

Based on the information obtained during the data collection process, no special consideration munitions are known or suspected to have been used at the site; therefore, the B-2044 Drop Tower/Test Rail is not suspected to contain special consideration MEC.

5.2.4. MEC Presence

The entire site has been subdivided and categorized into one of three levels of MEC presence including: Known MEC Areas, Suspect MEC Areas, and Areas where No Evidence exists to indicate that MEC is known or is suspected to be at the site. The MEC presence is discussed below.

Map 5.2-3 illustrates the munitions characterization of the B-2044 Drop Tower/Test Rail and is provided at the end of Section 5.2.

5.2.4.1.Known MEC Areas

There are no known MEC areas on site.

5.2.4.2.Suspected MEC Areas

There are no areas at the B-2044 Drop Tower/Test Rail suspected to contain MEC.

5.2.4.3.Areas Not Suspected to Contain MEC

Not suspect MEC areas include the entire 0.013-acre area, including the footprints of the drop tower and test rail. The fragmentation radius is not a suspected MEC area based on the amount of explosive filler in the 20mm cartridges. Map 5.2-3 illustrates the Not Suspect MEC area associate with the B-2044 Drop Tower/Test Rail.

5.2.5. Ordnance Penetration Estimates

The depth to which munitions penetrate below the ground surface depends on many factors, including the type of soil, the angle of impact, the size of the munitions, the velocity at impact,

and site specific environmental conditions. Over the years, the DoD has studied and modeled munitions penetration depths and has issued various guidance and technical documents on the subject. For the purposes of the PA, maximum probable penetration depths are estimated following guidance listed in the latest draft (July 2002) of the DoD Directive on Explosives Safety issued by the DoD Explosives Safety Board [*DoD Directive 6055.9* (*DoD Ammunition and Explosives Safety Standards*)]. The Directive refers to *TM 5.855.1* and *NAVFAC P-1080*.

Since the 20mm cartridges were dropped on a concrete pad, it is not expected that they penetrated the soil. No records were discovered that indicate whether or not any cartridges missed the concrete pad and impacted the adjacent soil. All tests of CADs and PADs conducted on the test rail were airborne; therefore, there was no ground penetration.

5.2.6. Munitions Constituents

MC associated with the types of munitions assumed to have been used at the B-2044 Drop Tower/Test Rail, NSWC Crane include a combination of various chemicals used as fillers. CADs are filled with bullseye black powder. PADs are filled with similar explosive material including high-density carboxy terminated polybutadiene, N-53. The 20mm cartridges contained explosive material such as black powder.

Bullseye Black Powder is the oldest explosive known. It is an intimate uniform mechanical mixture of finely pulverized potassium nitrate (or sodium nitrate), charcoal, and sulfur. It is one of the most dangerous explosives to handle because of the ease with which it is ignited by heat, friction, or spark.

Technical MC information is included in Appendix D.

5.2.7. Contaminant Migration Routes

Studies have shown that ordnance can migrate due to environmental factors such as frost heave or erosion. Various testing occurred from the drop tower onto the concrete surface below the tower. The 20mm cartridges that were tested at the site were dropped on a concrete pad, so the MEC would have been concentrated on the concrete pad. The CAD/PAD testing that occurred on the test rail involved only airborne tests, and MEC would not have penetrated the ground surface.

Any MEC remnants would be located within surface soils (less than two feet bgs), which is above the frost heave line at the site. It is unlikely that MEC would migrate into the subsurface.

MC, if present, could migrate into groundwater, surface soil, subsurface soil, surface water and air. MC are not anticipated at the B-2044 Drop Tower/Test Rail; however, any MC remaining on site would be located in the surface soil immediately surrounding the concrete pad. The soil types at the site are suitable for drainage and leaching into the groundwater. There is no surface water at the site; therefore, MC is not anticipated to migrate into surface waters.

5.2.8. Receptors

Potential receptors for MEC include Navy personnel, contractors, visitors, trespassers, and biota. See Section 5.2.4 for details on the likelihood of MEC at the site.

MC pathways include human and ecological receptors of surface soil (zero to two feet) such as Navy personnel, contractors, visitors, trespassers, and biota. Vegetation, such as grass, within the area is eaten by wildlife. Navy personnel, contractors and visitors, trespassers and biota all could come in contact with surface soil through dermal contact and inhalation. See Section 5.2.6 for details on the likelihood of MC at the site.

5.2.8.1.Nearby Populations

NSWC Crane makes up almost the entire Martin County. Martin County is essentially rural. Some residential areas surround the NSWC Crane. Martin County has a population of 10,383, which comprises 0.16 percent of the state's population. The population per square mile in Martin County is 30.9. NSWC Crane is the second largest employer in southwest Indiana with over 3,400 Navy employees and over 550 Army employees. A Combined Bachelors Quarters (approximately 36 rooms) and family housing (approximately 30 units) are located at NSWC Crane.

5.2.8.2. Buildings Near/Within Site

Building 2044 is located immediately adjacent to the site. Naval personnel use this building regularly. There are smaller Naval buildings surrounding the site, as well as former storage and test preparation buildings.

5.2.8.3. Utilities On/Near Site

The nearby buildings and facilities have utilities; however, it is not known whether underground utilities exist at this site. NSWC Crane did not have utility maps available for review. The Public Works Department indicated that no maps were available and field verification of utilities would be required.

5.2.9. Land Use

The site is no longer used for testing and is considered closed. There is no anticipated plan to reuse the site in the future for testing purposes. The land surrounding the drop tower and test rail is forested and is covered with heavy grass and vegetation.

5.2.10. Access Controls / Restrictions

Access to the NSWC Crane is restricted. The NSWC Crane property is surrounded by locked, secured gates, with security at all entrances, as well as a security patrol. There is no fencing around the site to control access to the B-2044 Drop Tower/Test Rail. Access to the test area is not restricted.

5.2.11. Conceptual Site Model

This CSM was developed following guidance documents issued by the USEPA for hazardous waste sites and the USACE for OE sites. Guidance documents included the USEPA's Guidance for Conducting Remedial Investigations and Feasibility Studies under CERCLA (EPA/540/G-89/004) and the USACE CSM Guidance Development of Integrated Conceptual Site Models for Environmental Ordnance and Explosives (OE) Sites, which was final as of February 2003.

The CSM describes the site and its environmental setting. The CSM presents information regarding: 1) MEC and/or MC known or suspected to be at the site; 2) current and future reasonably anticipated or proposed uses of the real property; and 3) actual, potentially complete, or incomplete exposure pathways that link them. The CSM is the basis for the risk evaluation, prioritization, and remediation cost estimate.

The CSM is presented in a series of information profiles that present information about the site. The information profiles are included in Table 5.2-1.

Table 5.2-1: Conceptual Site Model Information Profiles – B-2044 Drop Tower/Test Rail

Profile Type	Information Needs	Preliminary Assessment Findings
Range/Site Profile	Installation Name	NSWC Crane
	Installation Location	Crane, Martin County, Indiana
	Range/Site Name	B-2044 Drop Tower/ Test Rail
	Range/Site Location	Central portion of NSWC Crane Division
	Range/Site History	Used for the drop testing of 20-mm ammunition and ejection seat testing using CADs/PADs on the test rail. It was first used January 1951 and remained in use until December 1973.
	Range/Site Area and Layout	Approximately 0.013 acres
	Range/Site Structures	A 100-ft. high metal drop tower exists at the site, as well as a metal test rail and a small open building used as a preparation area.
	Range/Site Boundaries	N: Highway 304A S: Wooded Area E: Highway 45 W: Wooded Area
	Range/Site Security	The installation is fenced. Once inside installation fence-line, there are no other barriers to the site.
Munitions/ Release Profile	Munitions Types	20-mm cartridges, CADs/PADs
	Maximum Probability Penetration Depth	Surface only

Table 5.2-1: Conceptual Site Model Information Profiles – B-2044 Drop Tower/Test Rail

Profile Type	Information Needs	Preliminary Assessment Findings
	MEC Density	Minimal range related debris is expected to be at the site based upon the Navy operating procedures to collect and remove related debris immediately after testing.
	MEC Scrap/Fragments	None found during site visit.
	Associated Munitions Constituents	Minimal amount of metals and other inorganics.
	Migration Routes/Release Mechanisms	If MC were present at the site, it would only be located within surface soils (less than two feet bgs). MC are not anticipated to be present at the B-2044 Drop Tower/Test Rail; however, if MC are present at the site they may migrate via soil and groundwater.
Physical Profile	Climate	Temperate climate zone, which has a wide temperature range between summer and winter
	Topography	Flat to gently undulating terrain
	Geology	The area is located on the eastern flank of the Illinois Basin consisting of shale, sandstone, limestone, and coal beds.
	Soil	ZnB-Zanesville-Udorthents Complex, 6 to 12 % slopes
	Hydrogeology	No wells located on site. Groundwater is not used for drinking.
	Hydrology	NSWC Crane is located within the Lower East Fork White watershed. The East Fork White River flows approximately 40 miles southwest before joining the Muscatatuck River, which eventually joins the Ohio River. NSWC Crane is located approximately 10 miles northwest of the East Fork White River.
	Vegetation	The area is covered with low grass and is surrounded by wooded land.
Land Use and Exposure Profile	Current Land Use	The site is no longer used for testing and is considered closed. There is no anticipated plan to reuse the site in the future for testing purposes. The land surrounding the drop tower and test rail is forested and is covered with heavy grass and vegetation. There are no anticipated uses for the site.
	Current Human Receptors	Naval personnel, contractors, authorized visitors, and trespassers.

Table 5.2-1: Conceptual Site Model Information Profiles – B-2044 Drop Tower/Test Rail

Profile Type	Information Needs	Preliminary Assessment Findings
	Current Activities (frequency, nature of activity)	No activity currently at the site.
	Potential Future Land Use	No change in land use is expected.
	Potential Future Human Receptors	Naval personnel, contractors, authorized visitors, and trespassers.
	Potential Future Land Use-Related Activities:	No change in land use is expected.
	Zoning/Land Use Restrictions	No known zoning/land use restrictions
	Demographics/Zoning	NSWC Crane employs 4,000 personnel, both civilian and military. Martin County has a population of 10,383, which comprises 0.16 percent of the state's population. The population per square mile in Martin County is 30.9.
	Beneficial Resources	The NSWC Crane forest has been important to the re-establishment of deer, turkey, ruffed grouse and eagles in Indiana. Timber is also harvested at NSWC Crane.
Ecological Profile	Habitat Type	Grassland and woodlands
	Degree of Disturbance	If current conditions continue, the degree of disturbance at the site will be low. Low indicates that the site is/will be unused, and habitat for species present are/will be undisturbed (i.e., undisturbed grasslands, woodlands). Periodic activities will occur such as mowing and building maintenance.
	Ecological Receptors	
	Federal Endangered Species:	No federal endangered species are known at the site.
	Federal Threatened Species:	The Bald Eagle *(Haliaeetus leucocephalus)* could be located at the site based on the large hunting range of the eagle.
	State Endangered Species:	The potential for the Grasshopper sparrow, bobcat, osprey, timber rattlesnake, and yellow-crowned night heron exists; however, none have been identified at the site.
	State Threatened Species:	The Bald Eagle (Haliaeetus leucocephalus) could be located at the site based on the large hunting range of the eagle.

Table 5.2-1: Conceptual Site Model Information Profiles – B-2044 Drop Tower/Test Rail		
Profile Type	Information Needs	Preliminary Assessment Findings
	Other Ecological Receptors:	The habitat at the site and the surrounding area is home to many woodland wildlife species, such as deer, rabbits, raccoons, and wild turkeys. There is the potential for wildlife to burrow, forage, and nest on the site.
	Relationship of MEC/MC Sources to Habitat and Potential Receptors	Ecological receptors may come into direct contact with MEC/MC (in the soil or on the surface). Wildlife that inhabit or utilize the area may come into contact with MC that been incorporated into the food chain (bio-accumulated in plants and animals). Ecological receptors contacting MEC and creating an explosive hazard is not likely but should be considered.

A key element of the CSM is the exposure pathway analysis. For MEC, a complete or potentially complete exposure pathway must include the following components: 1) a source (e.g., locations where MEC are expected to be found); 2) access (e.g., controlled or uncontrolled access, items on the surface or within the subsurface); 3) an activity (e.g., non-intrusive grounds maintenance or intrusive construction); and 4) receptors (e.g., Navy personnel, construction workers, recreational user, authorized visitors, or trespassers). It is important to recognize that environmental mechanisms (e.g., erosion) and/or human intervention may result in the repositioning of MEC.

For MC, a complete or potentially complete exposure pathway must include the following components: 1) a source (e.g., locations where MC are expected to be found); 2) an exposure medium (e.g., surface soil); 3) an exposure route (e.g., dermal contact); and 4) receptors (e.g., Navy personnel, construction workers, recreational users, authorized visitors, or trespassers). If the point of exposure is not at the same location as the source, the pathway may also include a release mechanism (e.g., volatilization) and a transport medium (e.g., air).

The interactions between the source and receptors are assessed differently between MEC and MC. For MC, interaction between the source and receptors involves a release mechanism for the MC, an exposure medium that contains the MC, and an exposure route that places the receptor into contact with the contaminated medium. For MEC, interaction between the receptors and an MEC source has two components. The receptor must have access to the source and must engage in some activity that results in contact with individual MEC items within the source area.

MEC and MC exposure pathway analyses were not created for the B-2044 Drop Tower/Test Rail because MEC and MC sources are not anticipated at the site. The concrete pad, drop tower, and test rail used during testing at the B-2044 Drop Tower/Test Rail remain at the site. No visual evidence of MEC was observed during the site visit, and procedures required that all visible MEC debris be removed from the site after testing. In addition, testing would have been concentrated on the concrete pad, preventing the MEC and MC from directly contacting the surrounding soil. MC is not anticipated to be a source at the site due to the minimal amounts of MC associated with the testing performed at the B-2044 Drop Tower/Test Rail. Since one of the key components for the exposure pathway analysis, the source, is missing, an exposure pathway is not present at the site.

A graphical illustration of the details of the CSM is included in Figure 5.2-4 at the end of Section 5.2.11. The figure illustrates the filtration and runoff directions and potential areas for MEC/MC contamination. The illustration shows the wooded area and vegetation that exist at the site, creating a potential habitat for fauna. Direction of runoff follows the topography of the site. Red arrows indicate the direction of runoff across the site. The varying shades of green across the B-2044 Drop Tower/Test Rail indicate varying soil types below the ground surface.

FIGURE 5.2-4
B-2044 DROP TOWER/TEST RAIL GRAPHICAL ILLUSTRATION

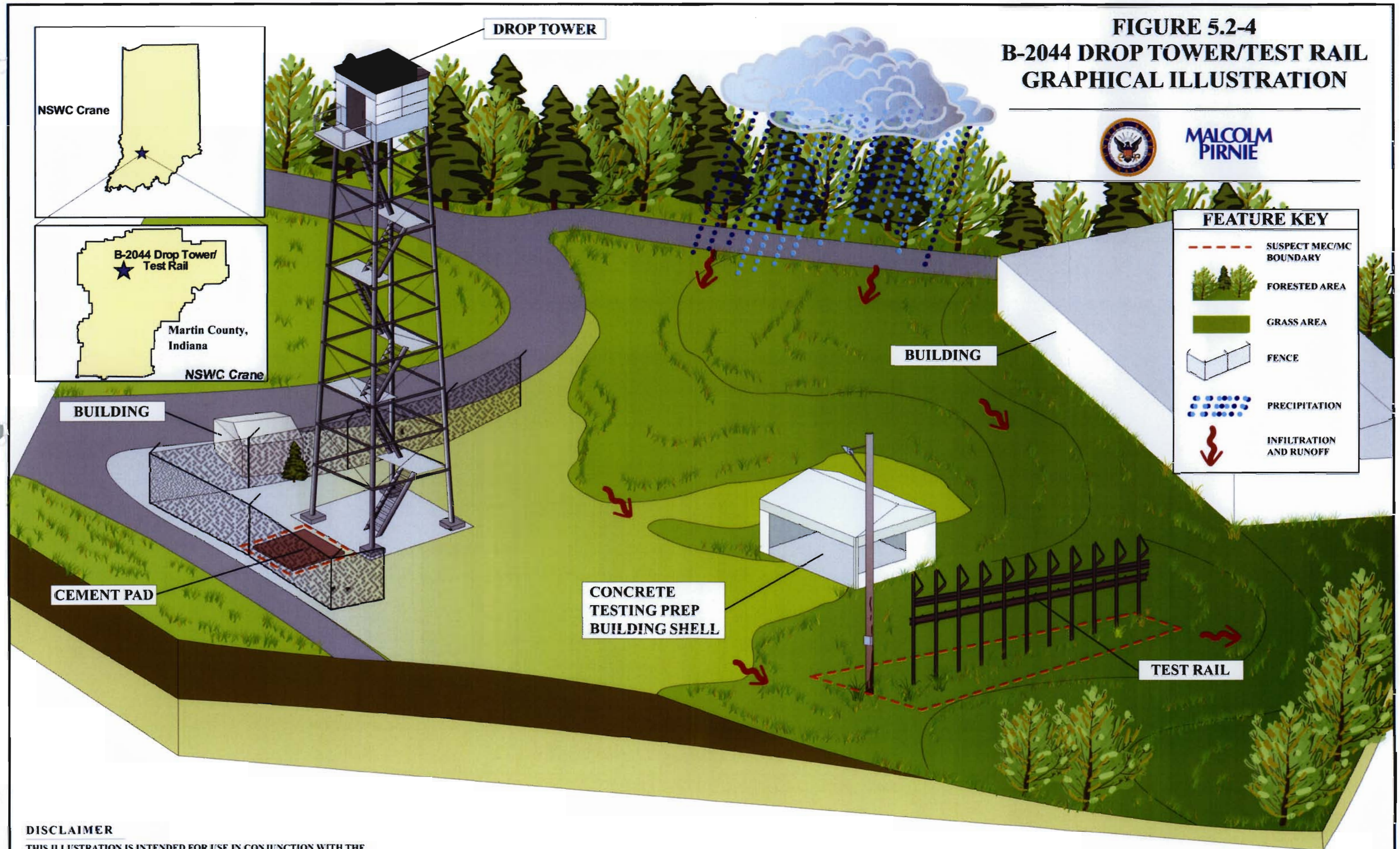

MALCOLM PIRNIE

DISCLAIMER

THIS ILLUSTRATION IS INTENDED FOR USE IN CONJUNCTION WITH THE REPORT IN WHICH IT WAS SUBMITTED AND IS NOT INTENDED TO BE USED AS A STAND ALONE DOCUMENT.

5.2.12. Summary

The history of the B-2044 Drop Tower/Test Area dates from 1951 to 1972. The site was used for the testing of 20mm cartridges, CADs, and PADs. No evidence was found indicating MEC on the surface at the B-2044 Drop Tower/Test Rail. It was Navy policy at the time to remove all retrievable MEC after testing. However, no records were found to document removals of MEC at the site. No investigations for MEC or MC have been conducted at the B-2044 Drop Tower/Test Area.

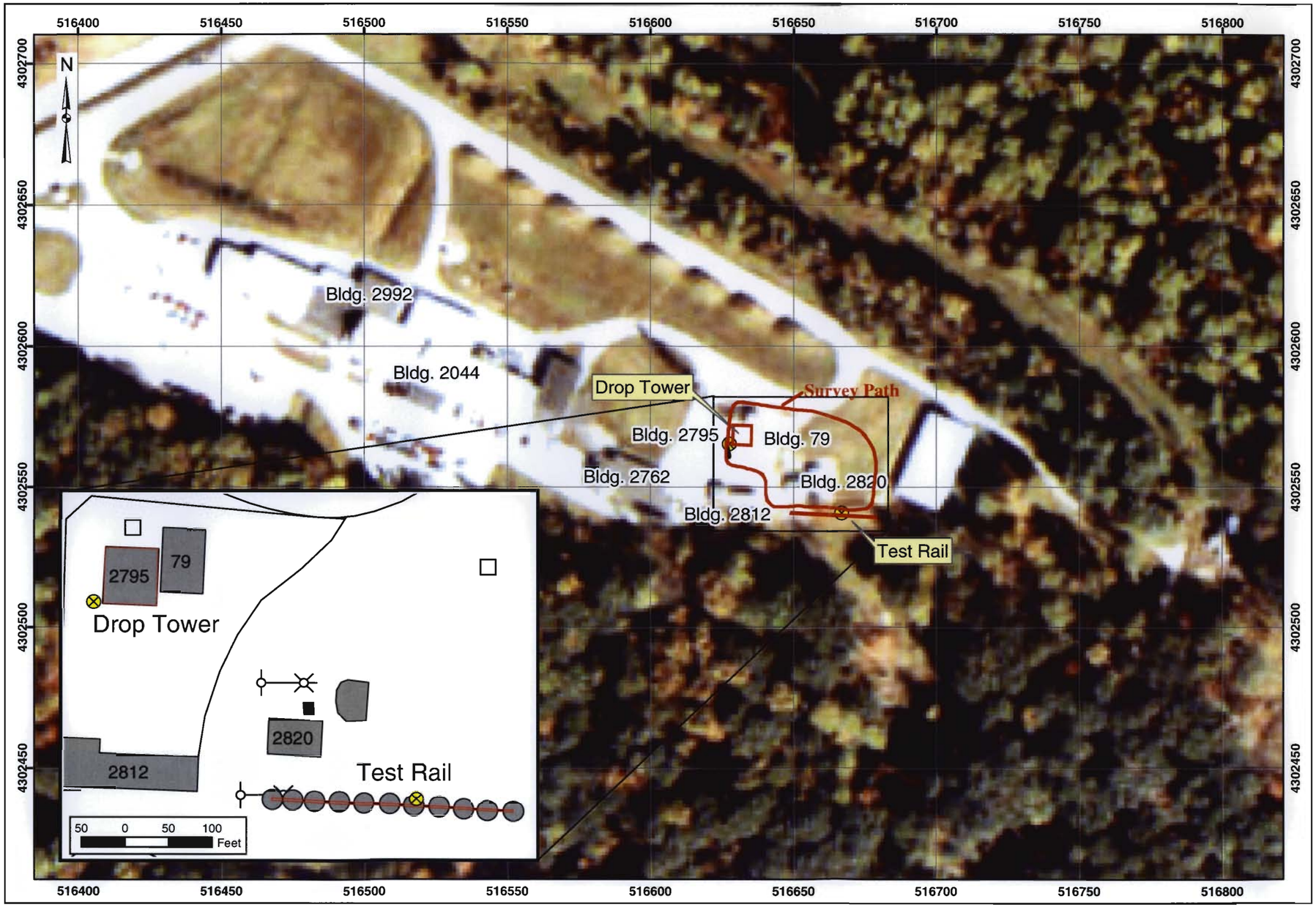

Preliminary Assessment
NSWC Crane, Indiana

MALCOLM PIRNIE

Map 5.2-1
Visual Survey
B-2044 Drop Tower/Test Rail

Legend

- Installation Boundary
- Site Reconnaissance
- B-2044 Drop Tower/Test Rail
- GPS Location

Site Reconnaissance path is approximate

20 0 20 40 60 Meters

Data Source: 1998 Aerial Photography; NSWC Crane CAD; NSWC Crane

Coordinate System: UTM Zone 16N
Datum: NAD 83
Units: Meters

Contract: N62472-02-D-1300
Edition: Revised Draft Final Preliminary Assessment
Date: May 2004

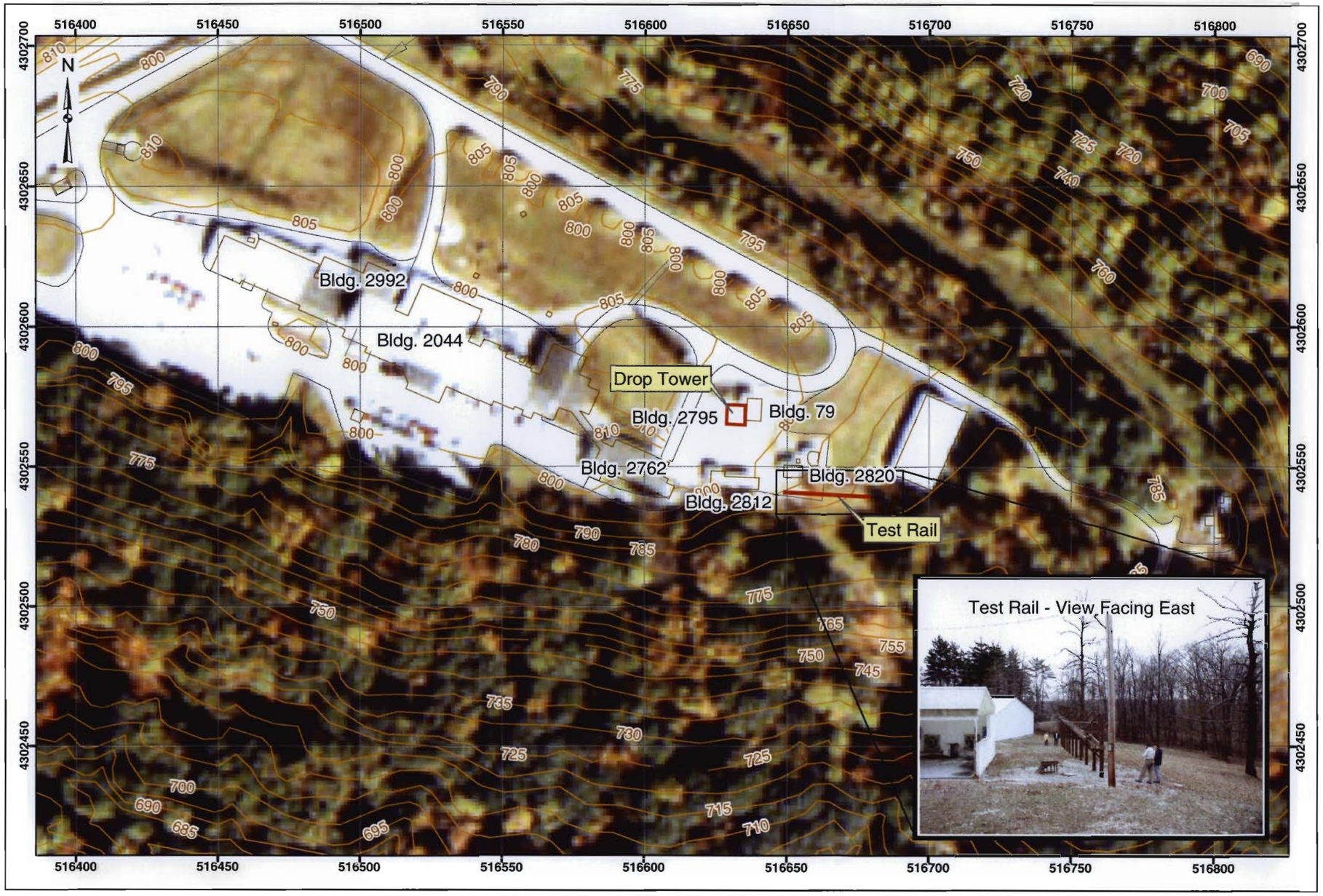

Preliminary Assessment
NSWC Crane, Indiana

MALCOLM PIRNIE

Map 5.2-2
Range/Site Details
B-2044 Drop Tower/Test Rail

Legend

- Installation Boundary
- Structures
- Contours
- Roads
- B-2044 Drop Tower/Test Rail

20 0 20 40 60 Meters

Data Source: 1998 Aerial Photography; NSWC Crane CAD; NSWC Crane

Coordinate System: UTM Zone 16N
Datum: NAD 83
Units: Meters

Contract: N62472-02-D-1300
Edition: Revised Draft Final Preliminary Assessment
Date: May 2004

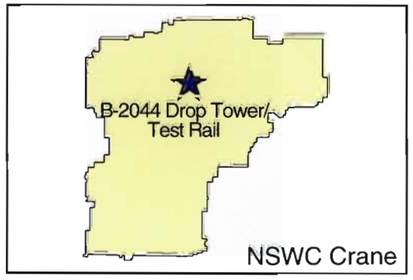

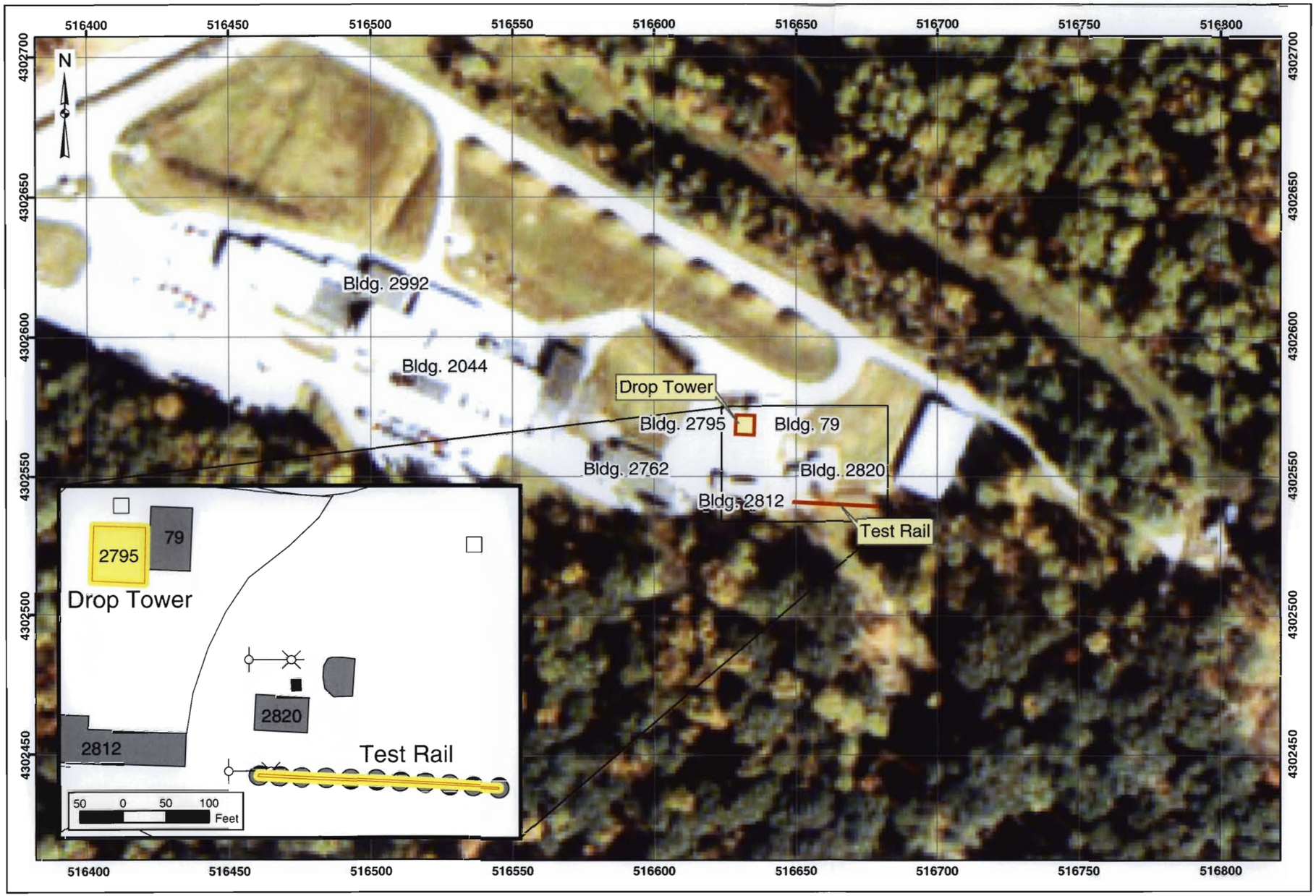

Preliminary Assessment
NSWC Crane, Indiana

MALCOLM PIRNIE

Map 5.2-3
Munitions Characterization
B-2044 Drop Tower/Test Rail

Legend

Installation Boundary

B-2044 Drop Tower/Test Rail

MEC Presence

Known

Suspect

MEC Presence was determined through review of historical documentation, interviews, and/or visual survey.

20 0 20 40 60 Meters

Data Source: 1998 Aerial Photography; NSWC Crane CAD; NSWC Crane

Coordinate System: UTM Zone 16N
Datum: NAD 83
Units: Meters

Contract: N62472-02-D-1300
Edition: Revised Draft Final Preliminary Assessment
Date: May 2004

5.3. B-2930 PROCESS CONTROL AREA

5.3.1. History and Site Description

The B-2930 Process Control Area was used from 1963 through 1968 for various pyrotechnics testing such as flares, ignition devices, smoke markers, signals, and screening smokes. From 1965 to 1970, the MK 58 red phosphorus candles made on the pyrotechnic line were tested in an area north of Building 2940 and Building 2930. The B-2930 Process Control Area is located along the parking lot near the current Building 2930. Behind Building 2930 is a two-story empty building structure used for fire training.

Figure 5.3-1: Northeast Section of Area around B-2930

Figure 5.3-1 is a photograph taken of the northeast section of the area surrounding B-2930. On the right side of the photo is the two-story structure used for fire training. The beige building in the background is Building 2931. The blue-gray building in the distance is Building 2930. The perimeter surrounding the area is forested. This site was identified through interviews with site personnel; specifically Mr. Shantz provided details about the site to the best of his knowledge. The B-2930 Process Control Area was not identified on historical maps.

The footprint of the B-2930 Process Control Area, as described by Mr. Schantz, was mapped during the site reconnaissance, and the mapped area was used to establish the 0.0042-acre area indicated on Map 5.3-1. This area differs from the 0.045-acres identified in the Navy Range Inventory. The 0.0042-acre size of the B-2930 Process Control Area is used in this PA because it was field verified.

5.3.1.1.Topography

The topography of the B-2930 Process Control Area is relatively flat. A parking lot covers the former process control area, and the site is completely flat. To the north of the parking lot is a grassy area that slopes gently downward to the north. The elevation of the B-2930 Process Control Area is approximately 800 feet. The site is located on a higher point of elevation, with the surrounding areas sloping gently downwards toward 750 feet.

There is not a great tendency for erosion or high amounts of runoff, as the site is generally flat.

5.3.1.2.Geology

There are no wells directly on B-2930 Process Control Area; therefore, the specific geology of the site is unknown. A description of the regional geology can be found in Section 3.3.

5.3.1.3.Soil and Vegetation Types

The B-2930 Process Control Area is a paved parking lot, with no vegetation on site. Surrounding the site is a grassy area bordered by wooded land. The wooded area is home to many young trees and sparse undergrowth, and leaf litter covers the grassy area.

According to the Martin County Soil Survey, the Zanesville-Udorthents complex with two to six percent slopes (ZnB) is present at the B-2930 Process Control Area. These gently sloping, shallow to deep, well drained and moderately well drained soils are on the tops of ridges in the uplands. They are about 48 percent Zanesville soil and 42 percent Udorthents. The Zanesville soil and Udorthents soil occur as areas so intricately mixed that mapping them separately is not practical. The Zanesville soil has a moderate available water capacity, and the Udorthents soil has moderate permeability and available water capacity. Most areas of these soils are used as woodland, and some are used as grassland. These soils are poorly suited to cultivated crops. Erosion and runoff are the major hazards if cultivated crops are grown. There are no cultivated crops at the B-2930 Process Control Area; therefore, erosion and runoff pose little threat.

5.3.1.4.Hydrology

The B-2930 Process Control Area is located within the central portion of the installation and lies within the central drainage basin. Surface water runoff from the site drains south into an un-named tributary, which flows southwest into Boggs Creek. Boggs Creek eventually empties into the East Fork of the White River south of NSWC Crane.

5.3.1.5.Hydrogeology

There are no wells directly on the B-2930 Process Control Area; therefore, the specific hydrogeology of the site is unknown. A description of the regional hydrogeology can be found in Section 3.6.

5.3.1.6.Cultural and Natural Resources

Although the potential for cultural resources exists for the area in which the site is located, there have not been any cultural sites identified at the B-2930 Process Control Area. Surrounding the B-2930 Process Control Area is a section of heavily wooded land but there are no records of specific use of this natural resource.

5.3.1.7.Endangered and Special Status Species

Threatened and endangered species for NSWC Crane are presented in Section 3.8. No evidence was found indicating the presence of the species listed at the B-2930 Process Control Area.

5.3.2. Visual Survey Observations and Results

A visual survey of the B-2930 was conducted on March 18, 2003. The Malcolm Pirnie survey team included Mr. Stark, Mr. Egholm, Mr. Dinh, and Ms. Howard. Mr. Keith and Mr. Shantz of NSWC Crane accompanied the team. During the initial site reconnaissance, the survey team mapped a large area in the grassy space north of Building 2930. The area covered in this site walk is shown on Map 5.3-1. The team did notice some metal objects in the ground that were determined to be old pipes. They were not munitions or munitions related debris. The Navy

Range Inventory stated that the site was behind Building 2930, so the team originally believed the former site to be located in the large flat grassy area behind Building 2930. After further interviews with Mr. Shantz and a second site walk, the team learned that the former site is located beneath the corner of the B-2930 expansion and the asphalt parking lot. The team did not observe any evidence of munitions or munitions related debris in this area. There are no records of EOD responses during construction of Building 2930.

The B-2930 Process Control Area consists of the northeast corner of the building. A fire training site, adjacent to B-2930, is used periodically. Approximately 100 feet north of the site, there is a two-story metal building structure used for fire training purposes. There is a rusty car to the east of the building that is also used for fire training. Figure 5.3-2 is a photograph taken to the east of the fire tower looking to the south at B-2930. The team did not observe any disturbances to the ground cover and did not find any depressions at the surface.

Figure 5.3-2: B-2930 is the blue building in the left of photograph, behind vehicle

A visual depiction of the site reconnaissance is provided on Map 5.3-1 located at the end of Section 5.3. Additional range/site details are illustrated on Map 5.3-2 also located at the end of Section 5.3.

5.3.3. Munitions and Munitions Related Materials Associated with the Site

This section describes the munitions or munitions related materials known or suspected to be at the site, including the types and estimated maximum penetration depths. This includes both MEC and non-hazardous munitions related scrap (e.g., fragmentation, base plates, inert mortar fins).

The B-2930 Process Control Area was used for the testing of MK 24 Mod 1, 2, 2A, 3, & 4, MK 58 Marine Marker, flares, ignition devices, smoke markers, signals, and screening smoke. The MK 24 parachute flares were made and tested on site from 1963 to 1968. From 1965 to 1970, the MK 58 red phosphorus candles were made on the pyrotechnic line and tested in an area north of Building 2940 and Building 2930. This test area was used extensively for testing flares, ignition devices, and smoke markers. The mode of testing is unknown.

An MK 24 was an air-launched, parachute-retarded flares used to provide intense illumination of large areas. The MK 58 was designed for use in air/sea rescue operations, as a target marker, and as a surface wind indicator. It featured day or night operation and could be launched by hand or from aircraft.

Based on the information obtained during the data collection process, no special consideration munitions are known or suspected to have been used at the site; therefore, the B-2930 Process Control Area is not suspected to contain special consideration MEC.

Additional technical information about these ordnance types is included in Appendix D.

5.3.4. MEC Presence

The entire site has been subdivided and categorized into one of three levels of MEC presence including: Known MEC Areas, Suspect MEC Areas, and Areas where No Evidence exists to

indicate that MEC is known or is suspected to be at the site. The MEC presence is discussed below.

Map 5.3-3 illustrates the munitions characterization of the B-2930 Process Control Area and is provided at the end of Section 5.3.

5.3.4.1.Known MEC Areas

There are no known MEC Areas associated with the site.

5.3.4.2.Suspected MEC Areas

There are no areas at the B-2930 Process Control Area suspected to contain MEC.

5.3.4.3.Areas Not Suspected to Contain MEC

Not suspect MEC areas include the entire B-2930 Process Control Area. Procedures were in place to remove related debris immediately after testing. The area is currently covered by asphalt paving and is inaccessible.

5.3.5. Ordnance Penetration Estimates

The depth to which munitions penetrate below the ground surface depends on many factors, including the type of soil, the angle of impact, the size of the munitions, the velocity at impact, and site specific environmental conditions. Over the years, the DoD has studied and modeled munitions penetration depths and has issued various guidance and technical documents on the subject. For the purposes of the PA, maximum probable penetration depths are estimated following guidance listed in the latest draft (July 2002) of the DoD Directive on Explosives Safety issued by the DoD Explosives Safety Board [*DoD Directive 6055.9* (*DoD Ammunition and Explosives Safety Standards*)]. The Directive refers to *TM 5.855.1* and *NAVFAC P-1080*.

None of the ordnance listed in Section 5.3.3 are anticipated to have penetrated greater than one foot bgs due to the nature of pyrotechnics tested on site. With the expansion of Building 2930, any MEC is covered by an asphalt parking lot and is not accessible; therefore, it poses no threat to receptors.

5.3.6. Munitions Constituents

MC associated with the types of munitions known to have been used at the B-2930 Process Control Area include red phosphorus (RP) and white phosphorus (WP) and perchlorate. MC exposure at the site is limited due to site being located beneath Building 2930 and asphalt parking lot.

5.3.7. Contaminant Migration Routes

Studies have shown that ordnance can migrate due to environmental factors such as frost heave or erosion. MEC remaining in the soil were covered during the expansion of Building 2930 and the construction of the associated asphalt parking lot. If MEC were present at the site, it would only be located in the subsurface soil beneath Building 2930 and the parking lot. It is unlikely that the MEC would migrate into the surface soil at the site because the site is covered by a building and a parking lot.

MC, if present, could migrate into groundwater, surface soil, subsurface soil, and surface water. MC are not anticipated at the B-2930 Process Control Area ; however, any MC remaining on site would be located in the subsurface soil beneath Building 2930 and the parking lot. The soil types at the site are suitable for drainage and leaching into the groundwater. There is no surface water at the site; therefore, MC is not anticipated to migrate into surface waters.

5.3.8. Receptors

The potential MEC exposure pathway for human receptors pertaining to the B-2930 Process Control Area exists in surface soil (less than two feet bgs). MEC receptors include Navy personnel, contractors, trespassers and authorized visitors who may come in contact with surface soil as a result of intrusive activities. The current site is covered by asphalt and only would be accessible if digging, construction, or other intrusive activities were to occur. See Section 5.3.4 for details on the likelihood of MEC at the site.

MC pathways include receptors of surface soil (less than two feet bgs). All surface soil is covered by asphalt at this level, limiting access by any receptors. The potential MC exposure

pathways for human receptors pertaining to the B-2930 Process Control Area are intrusive activities of surface soil. Human receptors may be affected through direct dermal contact, ingestion, or inhalation of soils. Navy personnel and contractors are the most likely to have repeated and lengthy exposures, where as trespassers and visitors will have a diminished duration or limited frequency of exposure to MC in the exposed surface soil. There is no known use of groundwater at the installation, so groundwater receptors are not included in this analysis. See Section 5.3.6 for details on the likelihood of MC at the site.

5.3.8.1.Nearby Populations

NSWC Crane makes up almost the entire Martin County. Martin County is essentially rural. Some residential areas surround the NSWC Crane. Martin County has a population of 10,383, which comprises 0.16 percent of the state's population. The population per square mile in Martin County is 30.9. NSWC Crane is the second largest employer in southwest Indiana with over 3,400 Navy employees and over 550 Army employees. A Combined Bachelors Quarters (approximately 36 rooms) and family housing (approximately 30 units) are located at NSWC Crane.

5.3.8.2. Buildings Near/Within Site

Building 2930 is located on the site. Buildings 2940 and 2931 are adjacent to the site. Naval personnel use these buildings regularly.

5.3.8.3. Utilities On/Near Site

The nearby buildings and facilities have utilities; however, it is not known whether underground utilities exist at this site.

5.3.9. Land Use

The area is no longer used for pyrotechnics testing as the building and surrounding parking lot have been constructed on the site. The land use is not anticipated to change for the foreseeable future; therefore, the current and anticipated future land use for the area is office space.

5.3.10. Access Controls / Restrictions

Access to the NSWC Crane is restricted. The NSWC Crane property is surrounded by locked, secured gates, with security at all entrances, as well as a security patrol. There is no fencing around the entire site to control, restrict, or limit access to the B-2930 Process Control Area. Access to the former pyrotechnics area is not restricted.

5.3.11. Conceptual Site Model

This CSM was developed following guidance documents issued by the USEPA for hazardous waste sites and the USACE for OE sites. Guidance documents included the USEPA's Guidance for Conducting Remedial Investigations and Feasibility Studies under CERCLA (EPA/540/G-89/004) and the USACE CSM Guidance Development of Integrated Conceptual Site Models for Environmental Ordnance and Explosives (OE) Sites, which was final as of February 2003.

The CSM describes the site and its environmental setting. The CSM presents information regarding: 1) MEC and/or MC known or suspected to be at the site; 2) current and future reasonably anticipated or proposed uses of the real property; and 3) actual, potentially complete, or incomplete exposure pathways that link them. The CSM is the basis for the risk evaluation, prioritization, and remediation cost estimate.

The CSM is presented in a series of information profiles that present information about the site. The information profiles are included in Table 5.3-1.

Table 5.3-1: Conceptual Site Model Information Profiles – B-2930 Process Control Area

Profile Type	Information Needs	Preliminary Assessment Findings
Range/Site Profile	Installation Name	NSWC Crane
	Installation Location	Crane, Martin County, Indiana
	Range/Site Name	B-2930 Process Control Area
	Range/Site Location	Central portion of NSWC Crane.
	Range/Site History	The area was used to test MK 24 aircraft parachute flares and MK 58 red phosphorus candles. The site opened in January 1963 and was used until December 1968.

Table 5.3-1: Conceptual Site Model Information Profiles – B-2930 Process Control Area		
Profile Type	**Information Needs**	**Preliminary Assessment Findings**
	Range/Site Area and Layout	Approximately 0.0042 acres
	Range/Site Structures	Building 2930, an asphalt parking lot, and a fire rescue training facility.
	Range/Site Boundaries	N: Wooded area S: Highway 45 E: Building 2824 and wooded area W: Building 2931 (Semiconductor Stage & Test)
	Range/Site Security	The installation is fenced; however the B-2930 Process Control Area is not fenced.
Munitions/ Release Profile	Munitions Types	Pyrotechnics: MK 24 aircraft parachute flares, MK 58 red phosphorus candles.
	Maximum Probability Penetration Depth	MEC are not anticipated to have penetrated greater than one foot bgs due to the nature of pyrotechnics tested on site.
	MEC Density	Minimal range related debris is expected to be at the site based upon the Navy operating procedures to collect and remove related debris immediately after testing. No evidence of MEC was observed at the site.
	MEC Scrap/Fragments	None found during site visit.
	Associated Munitions Constituents	Minimal amount of metals and other inorganics.
	Migration Routes/Release Mechanisms	Potential leaching
Physical Profile	Climate	Temperate climate zone, which has a wide temperature range between summer and winter.
	Topography	Flat to gently undulating terrain
	Geology	The area is located on the eastern flank of the Illinois Basin consisting of shale, sandstone, limestone, and coal beds.
	Soil	Zanesville-Udorthents complex, 2 to 6% slopes
	Hydrogeology	No wells present.
	Hydrology	NSWC Crane is located within the Lower East Fork White watershed. The East Fork White River flows approximately 40 miles southwest before joining the Muscatatuck River, which eventually joins the Ohio River. NSWC Crane is located approximately 10 miles northwest of the East Fork White River.

Table 5.3-1: Conceptual Site Model Information Profiles – B-2930 Process Control Area		
Profile Type	**Information Needs**	**Preliminary Assessment Findings**
	Vegetation	The area is covered with low grass and is surrounded by trees shrubs.
Land Use and Exposure Profile	Current Land Use	Currently, the area is covered by Building 2930 and an asphalt parking lot.
	Current Human Receptors	Naval personnel, contractors, authorized visitors, and trespassers.
	Current Activities (frequency, nature of activity)	The site is currently used for parking of vehicles.
	Potential Future Land Use	No change in land use is expected.
	Potential Future Human Receptors	Naval personnel, contractors, authorized visitors, and trespassers.
	Potential Future Land Use-Related Activities:	No change in land use is expected.
	Zoning/Land Use Restrictions	No known zoning/land use restrictions.
	Demographics/Zoning	NSWC Crane employs 4,000 personnel, both civilian and military. Martin County has a population of 10,383 that comprises 0.16 percent of the state's population. The population per square mile in Martin County is 30.9.
	Beneficial Resources	None
Ecological Profile	Habitat Type	Site is covered by asphalt, but the surrounding area is grassland and woodlands.
	Degree of Disturbance	Site covered by asphalt.
	Ecological Receptors	
	Federal Endangered Species:	No federal endangered species are known at the site.
	Federal Threatened Species:	The Bald Eagle *(Haliaeetus leucocephalus)* could be located in the surrounding area based on the large hunting range of the eagle.
	State Endangered Species:	The potential for the Grasshopper sparrow, bobcat, osprey, timber rattlesnake, and yellow-crowned night heron exists; however, none have been identified at the site.
	State Threatened Species:	The Bald Eagle *(Haliaeetus leucocephalus)* could be located in the surrounding area based on the large hunting range of the eagle.

Table 5.3-1: Conceptual Site Model Information Profiles – B-2930 Process Control Area		
Profile Type	Information Needs	Preliminary Assessment Findings
	Other Ecological Receptors:	The habitat in the surrounding area is home to many woodland wildlife species, such as deer, rabbits, raccoons, and wild turkeys. There is the potential for wildlife to burrow, forage, and nest near the site.
	Relationship of MEC/MC Sources to Habitat and Potential Receptors	Any MEC or MC remaining at the site are covered by an asphalt parking lot and building, preventing any access or exposure to MEC or MC. Wildlife that inhabit or utilize the surrounding area may come into contact with MC that been incorporated into the food chain (bio-accumulated in plants and animals).

A key element of the CSM is the exposure pathway analysis. For MEC, a complete or potentially complete exposure pathway must include the following components: 1) a source (e.g., locations where MEC are expected to be found); 2) access (e.g., controlled or uncontrolled access, items on the surface or within the subsurface); 3) an activity (e.g., non-intrusive grounds maintenance or intrusive construction); and 4) receptors (e.g., Navy personnel, construction workers, recreational users, authorized visitors, or trespassers). It is important to recognize that environmental mechanisms (e.g., erosion) and/or human intervention may result in the repositioning of MEC.

For MC, a complete or potentially complete exposure pathway must include the following components: 1) a source (e.g., locations where MC are expected to be found); 2) an exposure medium (e.g., surface soil); 3) an exposure route (e.g., dermal contact); and 4) receptors (e.g., Navy personnel, construction workers, recreational users, authorized visitors, or trespassers). If the point of exposure is not at the same location as the source, the pathway may also include a release mechanism (e.g., volatilization) and a transport medium (e.g., air).

The interactions between the source and receptors are assessed differently between MEC and MC. For MC, interaction between the source and receptors involves a release mechanism for the MC, an exposure medium that contains the MC, and an exposure route that places the receptor into contact with the contaminated medium. For MEC, interaction between the receptors and an MEC source has two components. The receptor must have access to the source and must engage in some activity that results in contact with individual MEC items within the source area.

MEC and MC exposure pathway analyses were not created for the B-2930 Process Control Area because sources are not anticipated to remain at the site. The B-2930 Process Control Area is beneath an asphalt parking lot and no evidence of MEC was observed at the site. Personnel interviewed stated that all related debris was removed from the site immediately after testing. In addition, MEC are not anticipated to have penetrated greater than one foot bgs due to the nature of pyrotechnics tested on site. Surface soil at the site has been graded for the construction of Building 2930, so no MC source remains at the site. Since one of the key components for the exposure pathway analysis, the source, is missing, an exposure pathway is not present at the site.

A graphical illustration has not been included for the B-2930 Process Control Area because there is no access to any MEC or MC remaining at the site. The site is covered by an asphalt parking lot and/or building, preventing any access or exposure to MEC or MC.

5.3.12. Summary

The B-2930 Process Control Area was used from 1963 to1968 for various pyrotechnics testing such as flares, ignition devices, smoke markers, signals, and screening smokes. From 1965 to 1970, the MK 58 red phosphorus candles made on the pyrotechnic line were tested in an area north of Building 2940 and Building 2930. The 0.0042-acre are designated as the B-2930 Process Control Area is located along the parking lot near the current Building 2930. No surface evidence was observed indicating MEC at the B-2930 Process Control Area. Navy policy at the time would not have permitted the disposal of munitions near the pyrotechnics development buildings. MEC or MC remaining at the site from the pyrotechnics testing that occurred is covered by an asphalt parking lot, preventing access or exposure to MEC or MC.

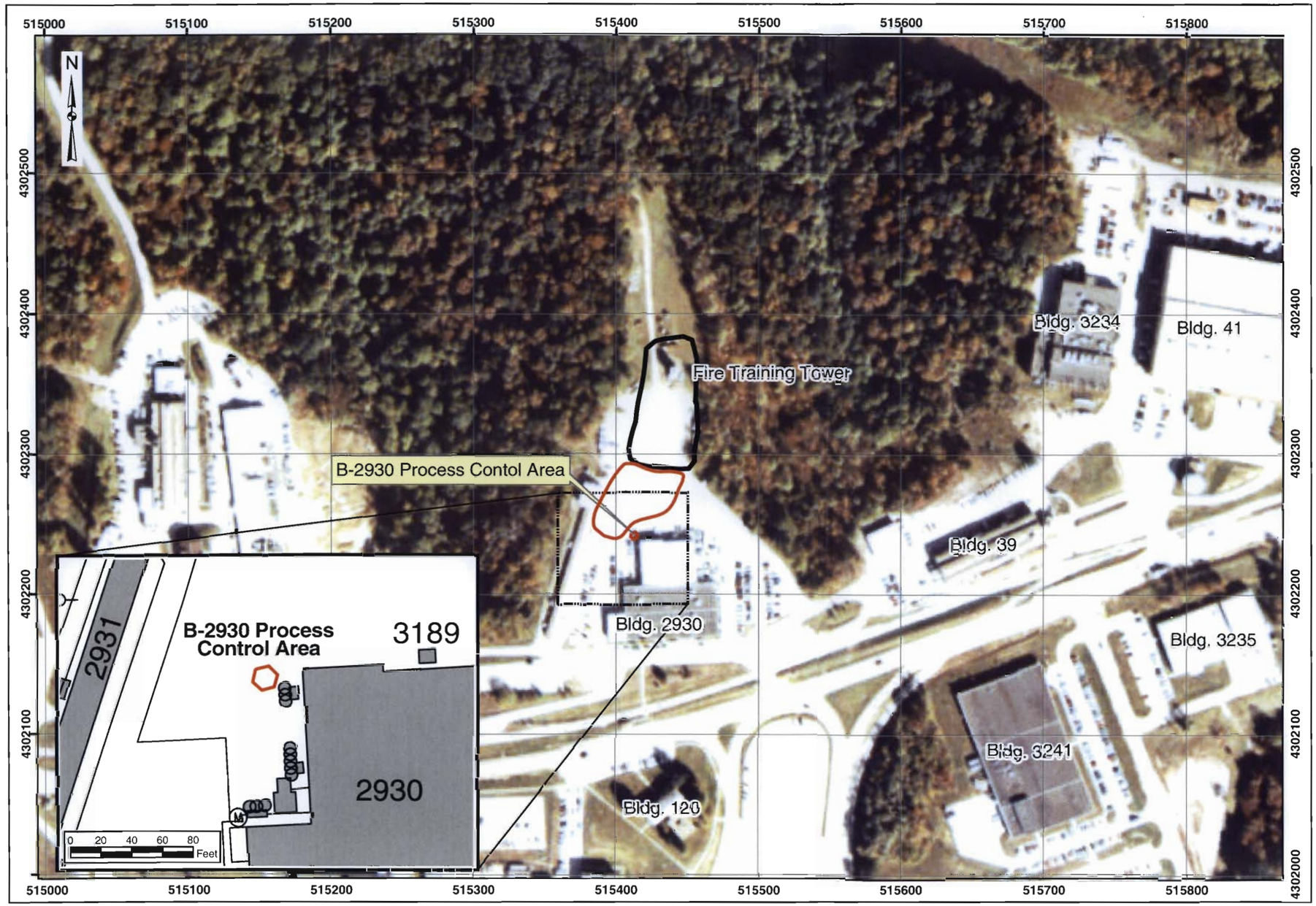

Preliminary Assessment
NSWC Crane, Indiana

Map 5.3-1
Visual Survey
B-2930 Process Control Area

Legend

- Installation Boundary
- Site Reconnaissance
- B-2930 Process Control Area

Site Reconnaissance path is approximate

40 0 40 80 120 Meters

Data Source: 1998 Aerial Photography; NSWC Crane CAD; NSWC Crane

Coordinate System: UTM Zone 16N
Datum: NAD 83
Units: Meters

Contract: N62472-02-D-1300
Edition: Revised Draft Final Preliminary Assessment
Date: May 2004

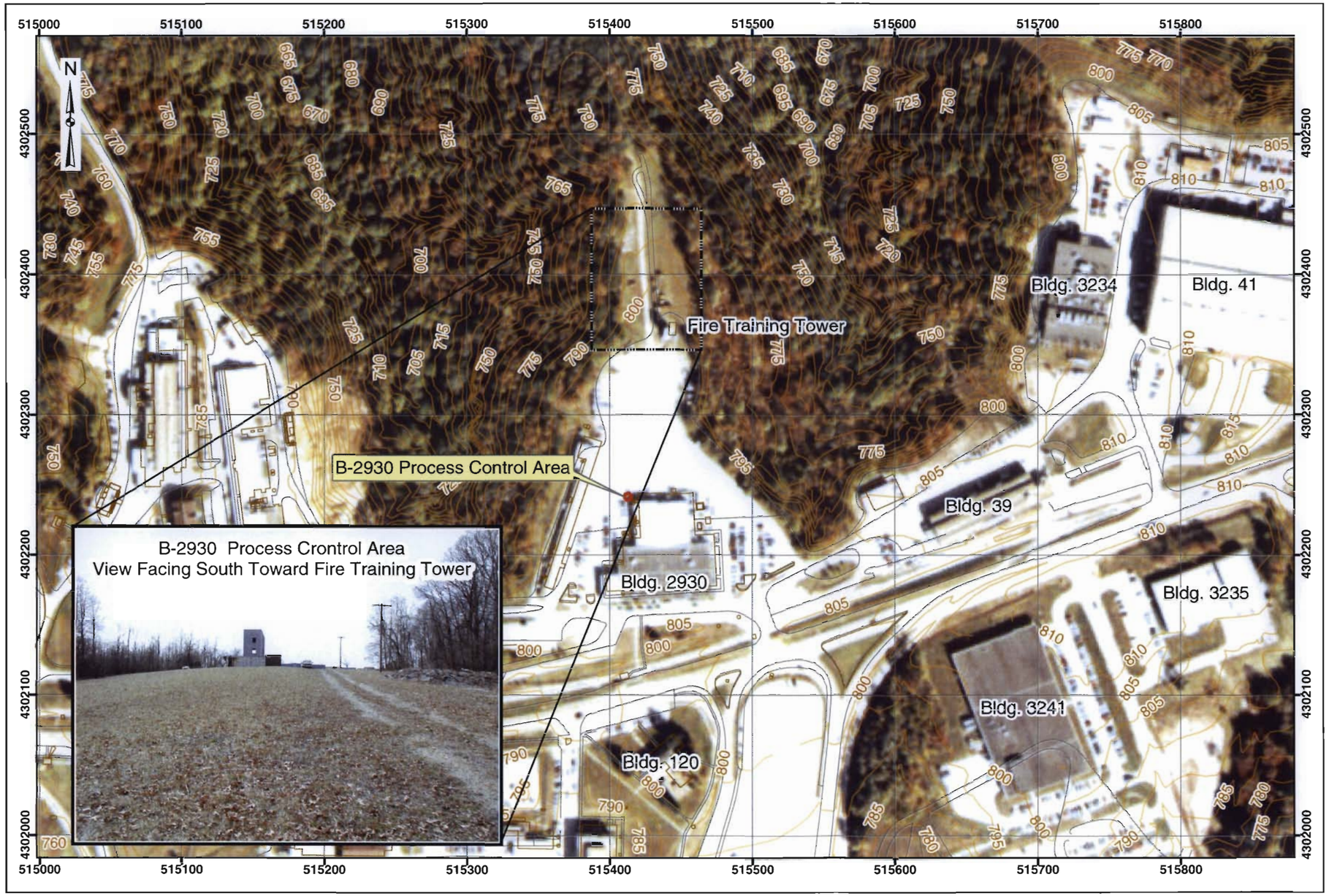

Preliminary Assessment
NSWC Crane, Indiana

MALCOLM PIRNIE

Map 5.3-2
Range/Site Details
B-2930 Process Control Area

Legend

- Installation Boundary
- Structures
- Roads
- Contours
- B-2930 Process Control Area

40 0 40 80 120 Meters

Data Source: 1998 Aerial Photography; NSWC Crane CAD NSWC Crane

Coordinate System: UTM Zone 16N
Datum: NAD 83
Units: Meters

Contract: N62472-02-D-1300
Edition: Revised Draft Final Preliminary Assessment
Date: May 2004

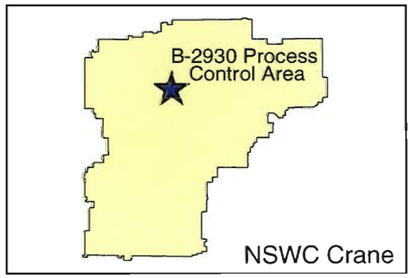

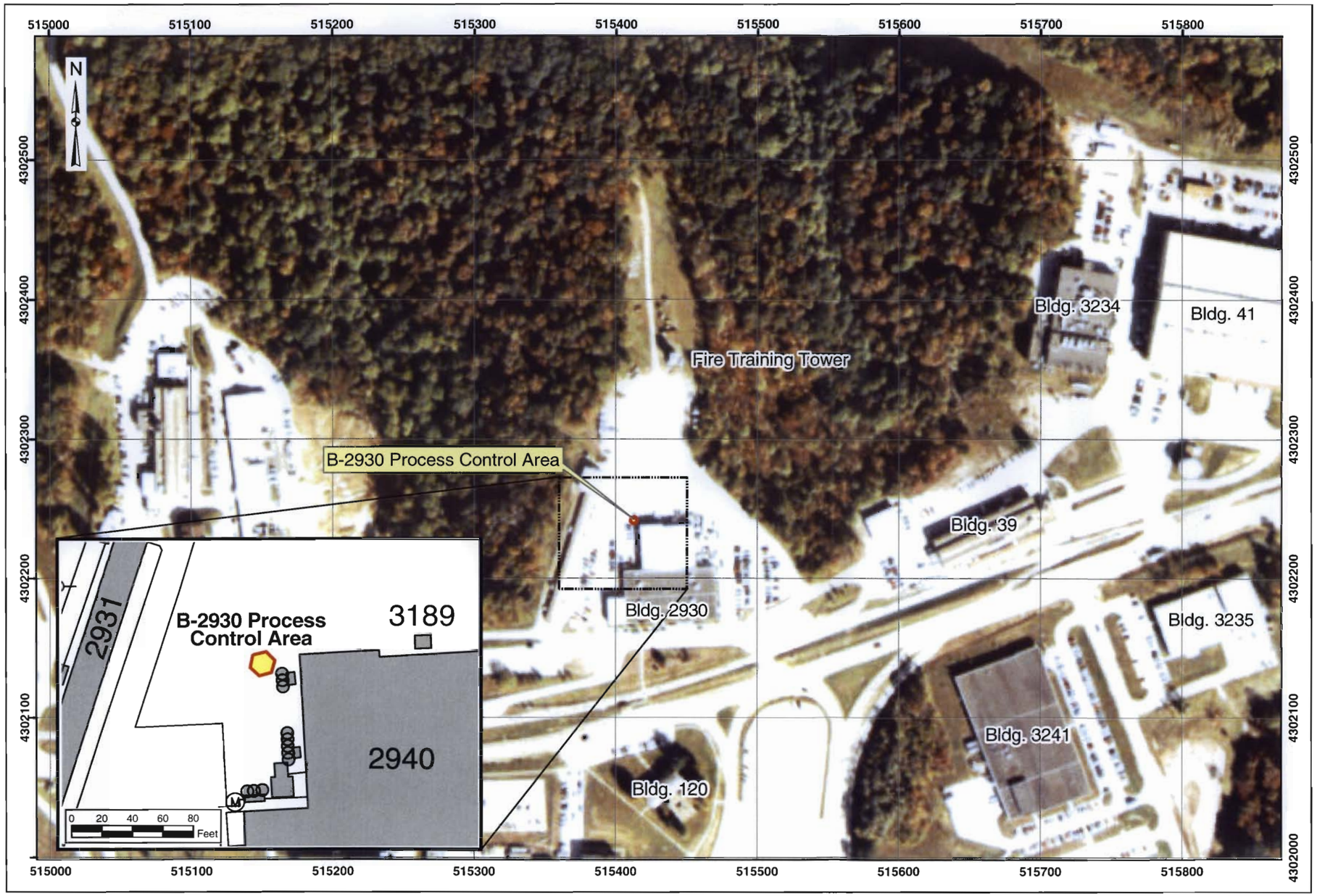

Preliminary Assessment
NSWC Crane, Indiana

MALCOLM PIRNIE

Map 5.3-3
Munitions Characterization
B-2930 Process Control Area

Legend

Installation Boundary

B-2930 Process Control Area

MEC Presence

Known

Suspect

MEC Presence was determined through review of historical documentation, interviews, and/or visual survey.

40 0 40 80 120 Meters

Data Source: 1998 Aerial Photography; NSWC Crane CAD; NSWC Crane

Coordinate System: UTM Zone 16N
Datum: NAD 83
Units: Meters

Contract: N62472-02-D-1300
Edition: Revised Draft Final Preliminary Assessment
Date: May 2004

5.4. PYRO AREA OUTSIDE TEST BURN PAD

5.4.1. History and Site Description

The Pyro Area Outside Test Burn Pad is located in the north-central portion of NSWC Crane as shown in Map 2.1-1. The Pyro Area is located south of Building 126 and west of Highway 45 in the Pyrotechnic Area of NSWC Crane. The Pyro Area Outside Test Burn Pad is approximately 0.002 acres. The size of the test area was mapped and calculated during the visual survey of the site. This area agrees with the 0.002 acres identified in the Navy Range Inventory. The Pyro Area Outside Test Burn Pad consists of two concrete basins located within a fenced area south of Building 122 as shown in Figure 5.4-1.

Figure 5.4-1: View of the concrete testing basins located inside fence

The concrete basins are separated from Building 126 by a grass and pavement area, three dumpsters, and a storage area. The concrete basins are approximately 30 feet apart and are in deteriorating condition.

The Pyro Area Outside Test Burn Pad was used from 1984 to 1985 to test various types of pyrotechnics that were developed at NSWC Crane, such as flares, signals, and screening smokes. According to Mr. Schantz, all testing conducted at the site was inside the concrete basins. Testing performed at the Pyro Area Outside Test Burn Pad was probably associated with the pyrotechnics

(flare assembly) production occurring in Building 126. Building 126, which is located north of the Pyro Area Outside Test Burn Pad, has historically been used for illuminant assembly.

5.4.1.1.Topography

The Pyro Area Outside Test Burn Pad is located in the north-central portion of NSWC Crane. The Pyro Area Outside Test Burn Pad is located on a relatively flat parcel of land that gently slopes to the southwest. The elevation of the site is approximately 775 feet.

5.4.1.2.Geology

There are no wells located directly on or in the immediate vicinity of the Pyro Area Outside Test Burn Pad; therefore, the specific site geology is unknown. A description of the regional geology can be found in Section 3.3.

5.4.1.3.Soil and Vegetation Types

The Pyro Area Outside Test Burn Pad and the surrounding area are located in a developed area with limited grass areas.

According to the Martin County Soil Survey, the Zanesville-Udorthents complex with two to six percent slopes (ZnB) is present at the Pyro Area Outside Test Burn Pad. These gently sloping, shallow to deep, well drained and moderately well drained soils are on the tops of ridges in the uplands. They are about 48 percent Zanesville soil and 42 percent Udorthents. The Zanesville soil and Udorthents soil occur as areas so intricately mixed that mapping them separately is not practical. The Zanesville soil has a moderate available water capacity, and the Udorthents soil has moderate permeability and available water capacity. Erosion and runoff are possible if cultivated crops are grown; however, the Pyro Area Outside Test Burn Pad is developed, so the site is less prone to erosion. The frost line in southern Indiana is approximately 2.5 feet bgs. Even though these soils contain fine grains, frost heave may not be a concern since the soils are very well drained.

5.4.1.4.Hydrology

The Pyro Area Outside Test Burn Pad is located within the central portion of the installation and lie within the central drainage basin. Surface water runoff from the site drains south into an un-named tributary, which flows southwest into Boggs Creek. Boggs Creek eventually empties into the East Fork of the White River south of NSWC Crane.

5.4.1.5.Hydrogeology

There are no wells located directly on or in the immediate vicinity of the Pyro Area Outside Test Burn Pad; therefore, specific hydrogeology of the site is unknown. A description of the regional hydrogeology can be found in Section 3.6.

5.4.1.6.Cultural and Natural Resources

Although the potential for cultural resources exist for the area in which the site is located, there have not been any archeological or cultural sites identified near the site. No records were found identifying specific cultural resources at the Pyro Area Outside Test Burn Pad in the Cultural Resources Survey from June 1992. No sites were identified on the Indiana Register of Historic Sites and Structures (Indiana State Register) or the National Register of Historic Places. Since the Pyro Area Outside Test Burn Pad area is developed, no natural resources exist at the site.

5.4.1.7.Endangered and Special Status Species

Threatened and endangered species for NSWC Crane are presented in Section 3.8. No evidence was found indicating the presence of the species listed at the Pyro Area Outside Test Burn Pad or in the immediate surrounding area.

5.4.2. Visual Survey Observations and Results

A visual survey of the Pyro Area Outside Test Burn Pad was conducted on March 20, 2003. The Malcolm Pirnie team included Mr. Dinh, Ms. Howard, Mr. Egholm, Mr. Stark, and Mr. Walenius. Mr. Keith and Mr. Schantz of NSWC Crane accompanied the team. The survey team was able to

walk 100% of the site. The perimeter of the test pads was mapped during the site reconnaissance. The total area surveyed by the team was approximately 0.002-acres. A visual depiction of the site reconnaissance is provided on Map 5.4-1 located at the end of Section 5.4. Additional range/site details are illustrated on Map 5.4-2 also located at the end of Section 5.4.

During the site reconnaissance, it was noted that the Pyro Area Outside Test Burn Pad contained two concrete testing basins instead of one as indicated in the Navy Range Inventory Questionnaire. Each basin is approximately six feet by six feet. The data collection team could not verify the depth of the basins because they were partially filled with dirt and ash. The data collection team observed approximately two to three feet of concrete above the ground surface. The concrete basins were in poor condition with deteriorating sides and evidence of damage. Figure 5.4-2 depicts one of the concrete testing basins as observed during the visual survey.

Figure 5.4-2: View of one concrete testing basin in poor condition.

The team also observed a covered storage area within the vicinity of the testing basins, as well as metal dumpsters located between the concrete basins and Building 126. The location of these items in regards to the basins is shown in Figure 5.4-3. During the site visit, the data collection team did not observe any munitions related debris within either basin or along the ground surface surrounding the basins; however, the condition of the basins provided evidence that munitions were tested within the basins.

Figure 5.4-3: View of concrete basin with storage area, dumpsters and Building 126 in background

5.4.3. Munitions and Munitions Related Materials Associated with the Site

This section describes the munitions or munitions related materials known or suspected to be at the site, including the types and estimated maximum penetration depths. This includes both MEC and non-hazardous munitions related scrap (e.g., fragmentation, base plates, inert mortar fins).

According installation personnel, the concrete testing basins were used for testing various pyrotechnics that were developed throughout the life of NSWC Crane. The data collection team was unable to locate documentation indicating the specific types and quantities of pyrotechnics tested at the Pyro Area Outside Test Burn Pad. However, documentation was found indicating that the pyrotechnics listed below were produced within the pyrotechnics area of the installation and may have been tested at the Pyro Areas Outside Test Burn Pad:

- Signal, Illumination, Marine, MK 2 Mod 0
- Signal, Smoke, Marine, MK 2 Mods 0
- Signal, Illumination, Aircraft, AN-M37A2 thru AN-M42A2; AN-M43A2 thru AN-M45A2; AN-M53A2 thru AN-M58A2
- Signal, Smoke, Ground, M62, M64 and M65
- Signal, Smoke and Illumination, Marine MK 13 Mod 0
- Signal, Smoke and Illumination, Marine MK 38 Mod 0
- Signal, Illumination, Ground, Green, M125A1

- Signal, Smoke, Ground, M128A1 and M129A1
- Signal, Hand Fired, MK 80 Mods 0 and 1
- Signal, Illumination, Aircraft, MK 6 Mod 0
- Signal, Smoke, Aircraft, MK 7 Mod 0
- Fuse, Warning, Railroad M72 Cartridge, Signal, MK 130, MK 138, MK 139, and MK 140 Mods 0
- Cartridge, Signal, MK 121, MK 122, and MK 123 Mods
- Flare, Aircraft, Parachute, MK 5 Mods
- Flare, Aircraft, Parachute, MK 6 Mods 3 thru 6
- Projectile Load, Illuminating, MK 7 Mod 0
- Flare, Aircraft, Parachute, MK 24 Mods 2, 2A, 3, and 4
- Projectile Load, Illuminating, MK 4 Mods
- Projectile Load, Illuminating, MK 9 Mods 0 and 1
- Projectile Load, Illuminating MK 11 Mod 0
- Projectile Load, Illuminating, MK 12 Mod
- Flare, Surface, High Altitude, Parachute MK 20
- Cartridge, 81MM Illuminating M301A2
- Flare, Surface M49 Grenade, Hand Illuminating MK 1 Mods 2 and 3
- Flare, Aircraft, Parachute MK 45 Mod 0
- Warhead, 5.0 Inch Rocket, Illuminating MK 33 Mod 1
- Marker, Location, Marine MK 2 Mods 0 and 1
- Signal, Smoke, Illuminating, Aircraft MK 5 Mods 3 and 4
- Signal, Smoke and Illumination, Aircraft MK 6 Mod 3
- Marker, Location, Marine MK 7 Mods 2 and 3
- Marker, Location, Marine MK 9 Mod 0
- Marker, Location, Marine MK 25 Mods 0, 1, 2, and 3
- Marker, Location, Marine MK 58 Mod 0
- Signal, Smoke, Aircraft MK 89 Mod 0
- Signal, Illumination, Marine, MK 3 Mods 1, 2, and 3
- Signal, Smoke and Illumination, Marine MKs 51, 52, and 53 Mods
- Marker, Location, Marine, MK 26 Mod 0 and Marker Location, Submarine, MK 75 Mod 0
- Signal, Smoke, Marine (Submarine) MK 2 Mods 0, 1, and 2
- Marker, Location, Submarine MKs 21, 22, 23, 24, 76, 77, 78, and 79 Mods 0

- Signal, Smoke and Illuminating, Marine MKs 66, 67, and 68 Mods 0
- Signal, Illumination, Marine MKs 41, 45, and 46 Mod 0
- Marker, Location, Marine, MK 28 Mod 0 and Marker Location, Submarine, MK 80 Mod 0
- False Target, Submarine MK 2 Mod 0
- Marker, Location, Marine, AN-MK 1 Mod 0 and 1
- Marker, Location, Marine, MK 1 Mods 2 (Green) and 3 (Yellow)
- Marker, Location, Marine, MK 8 Mod 0
- Bomb, Photoflash M120 and M120A1
- Cartridge, Photoflash M112A1 Series
- Cartridge, Photoflash M123A1 Series
- Cartridge, Signal, Practice Bomb MK 4 Mods 3 and 4
- Cartridge, Signal, Practice Bomb MK 111 Mod 0
- Marker, Location, Marine, MK 38 Mod 0
- Single Assembly MK 25 Mod 2
- Unit, Color Burst MK 7 Mod 0
- Single Assembly MKs 39, 40, 43, and 44 Mod 0
- Signal, Smoke and Illumination, Marine MK 55 Mod 0
- Signal, Flash, Guided Missile MK 33 Mods 0 and 1
- Signal, Flash, Guided Missile MK 37 Mod 1
- Signal, Flash, Guided Missile MK 42 Mod 0
- Unit, Color Burst MK 1 and MK 2 Mods 0
- Unit, Color Burst MK 3 Mods 0 and 1
- Unit, Color Burst MK 5 Mod 0
- Unit, Color Burst MK 6 Mod 0
- Marker Kit, Location MK 19 Mod 0
- Projector, Marker MK 23 Mod 0
- Signal, Float, Torpedo MK 21 Mod 1
- Flare, Target, MK 28
- Flare, Guided Missile MK 21 Mod 0
- Tracer MK 21 Mod 0
- Flare, Guided Missile MK 27 Mod 0
- Tracking Device, Smoke, MK 1 Mod 0

- Flare, Guided Missile MK 25 Mod 0
- Flare, Decoy, MK 42, MK 43, MK 46 and MK 47 Mod 0
- Flare, Guided Missile MK 23 Mod 0
- Simulator, Detonation, Explosive MK 2
- Simulator, Booby Trap, Flash M117
- Simulator, Booby Trap, Illuminating M118
- Simulator, Booby Trap, Whistling M119
- Simulator, Projectile, Air Burst M74A1
- Simulator, Projectile, Ground Burst M115A2
- Smoke Pot, HC, MK 3 Mod 0
- Grenade, Hand, Smoke, WP, M15
- Smoke Pot M6
- Cartridge, Igniter, Turbo-Jet Engine MK 243 Mod 2
- Flare, Ground, Parachute XM-184
- Light, Chemical, Aerosol MK 11 Mod 0
- Marker, Location, Chemical, MK 46 Mod 0

The pyrotechnics identified above are used for a variety of purposes by the Navy. They can be target markers, smoke screens, flares and signals. No information was found to determine the frequency of testing or the quantity of pyrotechnics tested at the site. Kick outs of munitions or related debris are not anticipated based on the nature of testing at the site.

Based on the information obtained during the data collection process, no special consideration munitions (CWM filled munitions, electrically fuzed munitions, DU associated munitions) are known or suspected to have been used at the site; therefore, the Pyro Area Outside Test Burn Pad are not suspected to contain special consideration MEC.

Additional technical information about these ordnance types is included in Appendix D.

5.4.4. MEC Presence

The entire site has been subdivided and categorized into one of three levels of MEC presence including: Known MEC Areas, Suspect MEC Areas, and Areas where No Evidence exists to

indicate that MEC is known or is suspected to be at the site. The MEC presence is discussed below.

Map 5.4-3 illustrates the munitions characterization of the Pyro Area Outside Test Burn Pad and is provided at the end of Section 5.4.

5.4.4.1.Known MEC Areas

There are no known MEC areas associated with the site.

5.4.4.2.Suspected MEC Areas

The entire 0.002-acre Pyro Area Outside Test Burn Pad, which includes solely the concrete testing basins, is a suspect MEC area. No kick out of MEC is expected at the site. Map 5.4-3 illustrates the suspect MEC area associated with the Pyro Area Outside Test Burn Pad.

5.4.4.3.Areas Not Suspected to Contain MEC

There are no areas at the Pyro Area Outside Test Burn Pad not suspected to contain MEC.

5.4.5. Ordnance Penetration Estimates

Since the pyrotechnics testing that occurred at the Pyro Area Outside Test Pad was conducted inside the concrete basins, it is not expected that the pyrotechnics penetrated the soil; however, the condition of the bottom of the basins is unknown.

5.4.6. Munitions Constituents

MC associated with the types of munitions assumed to have been used at the Pyro Area Outside Test Burn Pad include a combination of various chemicals that are contained in burning-type colored smoke munitions and explosive-type colored smoke munitions. Chemicals used in typical smoke compositions include zinc oxide, sulfur, sodium hydrogen carbonate, sodium chloride, and potassium chlorate. Chemicals used in compositions for photoflash and spotting charged include magnesium, aluminum, potassium perchlorate, and barium nitrate. In addition,

various other chemicals could be contained in combination in burning-types smokes (i.e., heavy metals and ammonium perchlorate). The following is a partial list of chemicals that could be contained in burning-types smokes:

- Red Smoke – 9-diethylamino-phenyl-5-benzo (a) phenazinone, 1-(tolylazoxylylazo)-2-naphthol
- Green Smoke – 1, 8-di-p-toluidinoanthraquinone, Orange Smoke (burn-type) could contain 1-aminoanthraquinone
- Orange-Red Smoke – 1-(4-nitophenylazo)-2-naphthol.
- Yellow Smoke – Auramine hydrochloride, 1-(4-dimethylaminophenylazo)-2-naphthol
- Blue Smoke – 1, hydroxy-4-p-toluidinoanthraquinone, Indigo, 1,4-dimethylaminoanthraquinone
- Violet Smoke – 1,4-diamino-2, 3-dihydroanthraquinone, 1,5-di-p-toluidinoanthraquinone

The following is a list of chemicals contained in explosive-type colored smoke munitions:

- Red Smoke – 1-(2-methoxyphenylazo)-2-naphthol and a-methylaminoanthraquinone (Celanthrene Red)
- Yellow Smoke – 2,4-diaminoazobenzene (Chrysoidine G, base), Auramine Hydrochloride
- Green Smoke – 1,4-di-p-toluidinoanthraquinone (Quinizarin Green) plus quinophthalone
- (Quinoline Yellow, base), and 1,4-di-p-toluidinoanthraquinone plus auramine hydrochloride.

For a complete list of typical chemical compositions used in munitions tested at NSWC Crane, refer to Appendix B. Since kick out of MC is not anticipated to have occurred, MC would be located solely inside the concrete basins.

5.4.7. Contaminant Migration Routes

Studies have shown that ordnance can migrate due to environmental factors such as frost heave or erosion. Minimal amounts of MEC are expected to remain at the site based on Navy operating procedures to collect and remove related debris immediately after testing. If MEC were present at the site, it would only be located within the concrete basins identified at the site. Testing

occurred inside the basins; however, the condition of the bottom of the basins is unknown. Since it is assumed that the bottoms of the basins are concrete, MEC would not have penetrated the basins or surface soils. Since it is unlikely that the MEC penetrated the soil, MEC is not anticipated to migrate at the site.

It is possible for MC to migrate in the environment via the groundwater, soil, air, and surface water. MC present at the site may migrate via soil, groundwater, or through the installation's wastewater treatment system. If the bottoms of the concrete basins are concrete and intact, the potential for MC migration is minimal; however, if the bottoms of the concrete basins are damaged or not concrete, MC could migrate from subsurface soils through leaching to groundwater. MC could be present in the concrete basins and in the soils beneath the concrete basins, which could migrate through infiltration or runoff. Since the soils present at the site are well drained and moderately well drained, contaminants could leach from the soil to groundwater. Due to drainage of site soils, MC could migrate via these pathways into the un-named tributary discharging into Boggs Creek. Since the depth to groundwater and groundwater flow direction at the site are unknown, the specific contaminant migration route for MC in groundwater is unknown. In addition, since the site is located in a developed area, MC could migrate into the installation's wastewater treatment system through nearby manholes due to storm water runoff.

5.4.8. Receptors

The potential for MEC exposure pathway exists for human receptors at the Pyro Area Outside Test Burn Pad. MEC may be located inside the concrete testing basins. MEC potential receptors include Navy personnel and contractors who may encounter MEC during future demolition of the basins. Due to the development of the area in which the site is located and since MEC is only expected to be contained inside the concrete basins, it is not anticipated that wildlife would come into contact with MEC at the site. See Section 5.4.4 for details on the likelihood of MEC at the site.

The potential MC exposure pathways for human receptors at the Pyro Area Outside Test Pad Area include the surface soil (zero to two feet within the concrete basins) and subsurface soils (greater than two feet), if the bottoms of the basins are not intact or are not concrete. Human receptors may be affected through direct dermal contact, ingestion, or inhalation of surface and subsurface soils if the concrete basins are demolished. Navy personnel are most likely to have

repeated and lengthy exposures at the site. Contractors and visitors will have a diminished duration or limited frequency of exposure to MC in the surface soil at the site. Due to the development of the area in which the site is located and since any MC is primarily expected to be contained inside the concrete basins assuming the integrity of the basins is good, it is not anticipated that wildlife would come into contact with MC at the site. See Section 5.4.6 for details on the likelihood of MC at the site.

5.4.8.1.Nearby Populations

NSWC Crane makes up the majority of Martin County. The rest of Martin County is essentially rural with some residential areas surrounding NSWC Crane. Martin County has a population of 10,383, which comprises 0.16 percent of the state's population. The population per square mile in Martin County is 30.9. NSWC Crane is the second largest employer in southwest Indiana with over 3,400 Navy employees and over 550 Army employees. A Combined Bachelors Quarters (approximately 36 rooms) and family housing (approximately 30 units) are located at NSWC Crane.

5.4.8.2. Buildings Near/Within Site

Building 126 is located immediately north of the site as part of the designated "Pyro Area" at the installation. This building is used for flare and illuminant assembly. Building 122 is also located adjacent to the site and is used for flare assembly. Several other buildings associated with pyrotechnics production are located within the immediate area of the site. Naval personnel use these buildings regularly.

5.4.8.3. Utilities On/Near Site

The nearby buildings and facilities have utilities. NSWC Crane did not have utility maps available for review. The Public Works Department indicated that utility maps did not exist and that field verification of utilities would be required. A manhole was observed in the area of the concrete testing basins indicating that an underground pipeline exists at the site; however, no maps or records exist to document the location of the pipeline. The underground pipeline is most likely associated with a sanitary or storm water sewer line. The manhole associated with this

underground pipeline could receive potential MC during storm water events, and the pipeline itself could provide a preferred conduit for MC migration.

5.4.9. Land Use

The Pyro Area Outside Test Burn Pad were previously used for testing and are considered closed. Currently, the site is vacant and the immediate surrounding areas are used for storage. Due to the listed environmental concerns above, the land use of the site and surrounding areas is not anticipated to change for the foreseeable future. Therefore, the reasonably anticipated future land uses for the area are to remain closed.

5.4.10. Access Controls / Restrictions

Access to NSWC Crane is restricted. The NSWC Crane property is surrounded by locked, secured gates, with security at all entrances, as well as a security patrol. The site is located within the designated "Pyro Area". The "Pyro Area" is an area of the installation including six buildings (Building 126, 133, 1885, 1886, 2697, and 2698.) where various pyrotechnics are developed, manufactured, and stored. A fence surrounds the entire area of the pyrotechnics testing and assembly area, in which the Pyro Area Outside Test Burn Pad is located. Fencing around the entire site controls, restricts, and limits access to the pyrotechnics construction buildings and prohibits access to the area, including the Pyro Area Outside Test Burn Pad. The area is also provided with a security guard 24 hours a day who maintains access records.

5.4.11. Conceptual Site Model

This CSM was developed following guidance documents issued by the USEPA for hazardous waste sites and the USACE for OE sites. Guidance documents included the USEPA's Guidance for Conducting Remedial Investigations and Feasibility Studies under CERCLA (EPA/540/G-89/004) and the USACE CSM Guidance Development of Integrated Conceptual Site Models for Environmental Ordnance and Explosives (OE) Sites, which was final as of February 2003.

The CSM describes the site and its environmental setting. The CSM presents information regarding: 1) MEC and/or MC known or suspected to be at the site; 2) current and future reasonably anticipated or proposed uses of the real property; and 3) actual, potentially complete,

or incomplete exposure pathways that link them. The CSM is the basis for the risk evaluation, prioritization, and remediation cost estimate.

The CSM is presented in a series of information profiles that present information about the site. The information profiles are included in Table 5.4-1.

Table 5.4-1: Conceptual Site Model Information Profiles – Pyro Area Outside Test Burn Pad

Profile Type	Information Needs	Preliminary Assessment Findings
Range/Site Profile	Installation Name	NSWC Crane
	Installation Location	Crane, Martin County, Indiana
	Range/Site Name	Pyro Area Outside Test Burn Pad
	Range/Site Location	South of Building 122
	Range/Site History	Used for pyrotechnics testing from 1984 to 1985
	Range/Site Area and Layout	Approximately 0.002-acres
	Range/Site Structures	Currently contains two concrete testing basins, small covered storage shed, and dumpsters.
	Range/Site Boundaries	N: Building 126 S: Highway 98 E: Building 122 and Highway 45 W: Route 94
	Range/Site Security	The site is fenced with a security guard. Restricted access.
Munitions/ Release Profile	Munitions Types	Pyrotechnics (signals, flares, smoking screens, etc.)
	Maximum Probability Penetration Depth	Munitions were deployed inside two concrete basins. They are not expected to have penetrated below ground surface.
	MEC Density	Minimal range related debris is expected to be in the concrete basins based upon Navy operating procedures to collect and remove related debris immediately after testing.
	MEC Scrap/Fragments	None found during site visit.

Table 5.4-1: Conceptual Site Model Information Profiles – Pyro Area Outside Test Burn Pad

Profile Type	Information Needs	Preliminary Assessment Findings
	Associated Munitions Constituents	Based on the munitions assumed to be used at the site, a combination of various chemicals that are contained in burning-type colored smoke munitions and explosive-type colored smoke munitions may be present. Some chemicals used in typical smoke compositions include zinc oxide, sulfur, sodium hydrogen carbonate, sodium chloride, and potassium chlorate. Potential chemicals used in compositions for photoflash and spotting charged include magnesium, aluminum, potassium perchlorate, and barium nitrate. In addition, various other chemicals could be contained in combination in burning-types smokes (i.e., heavy metals and ammonium perchlorate).
	Migration Routes/Release Mechanisms	If MEC is present, it would only be located inside the concrete basins. Therefore, it is unlikely that the MEC would migrate into surface or ground waters. MC are not anticipated to be present; however, if MC are present at the site, it may migrate via runoff in sewer system, leach into soils and groundwater.
Physical Profile	Climate	Temperate climate zone, which has a wide temperature range between summer and winter.
	Topography	The site is located on a relatively flat parcel of land that slopes to the southwest. The elevation of the site is approximately 775.
	Geology	The area is located on the eastern flank of the Illinois Basin consisting of shale, sandstone, limestone, and coal beds. The specific geology of the site is unknown.
	Soil	Zanesville-Udorthents complex with two to six percent slopes is present at the site. These soils are gently sloping, shallow to deep, well drained and moderately well drained.
	Hydrogeology	Specific hydrogeology of the site is unknown.
	Hydrology	The site is located in the central drainage basin of NSWC Crane. Surface water runoff from the site would drain into the installation's sewer system or to an un-named tributary that leads to Boggs Creek. Boggs Creek eventually discharges into the East Fork White River south of NSWC Crane.

Table 5.4-1: Conceptual Site Model Information Profiles – Pyro Area Outside Test Burn Pad		
Profile Type	**Information Needs**	**Preliminary Assessment Findings**
	Vegetation	The area is covered with minimal amounts of low grass.
Land Use and Exposure Profile	Current Land Use	The concrete testing basins are no longer used; however, the surrounding area is used for storage.
	Current Human Receptors	Naval personnel, contractors, authorized visitors, and trespassers.
	Current Activities (frequency, nature of activity)	No activity currently at the site. Surrounding area is used for storage.
	Potential Future Land Use	No change in land use is expected.
	Potential Future Human Receptors	Naval personnel, contractors, authorized visitors, and trespassers if intrusive activities such as the demolition of the concrete basins.
	Potential Future Land Use-Related Activities:	No changes are expected in the future land use of the site.
	Zoning/Land Use Restrictions	No known zoning/land use restrictions.
	Demographics/Zoning	NSWC Crane employs approximately 4,000 personnel, both civilian and military. Martin County has a population of 10,383, which comprises 0.16 percent of the state's population. The population density per square mile in Martin County is 30.9.
	Beneficial Resources	None present at the site.
Ecological Profile	Habitat Type	Developed area. No natural habitat.
	Degree of Disturbance	If current conditions continue, the degree of disturbance at the site is high. The site is located in a developed area with constant personnel activity.
	Ecological Receptors	
	Federal Endangered Species:	No federal endangered species are known at the site.
	Federal Threatened Species:	None present at the site.
	State Endangered Species:	None present at the site.
	State Threatened Species:	None present at the site.
	Other Ecological Receptors:	The site is developed and there is no natural habitat.

Table 5.4-1: Conceptual Site Model Information Profiles – Pyro Area Outside Test Burn Pad		
Profile Type	Information Needs	Preliminary Assessment Findings
	Relationship of MEC/MC Sources to Habitat and Potential Receptors	It is not anticipated that any ecological receptors will come into contact with MEC/MC sources at the site.

A key element of the CSM is the exposure pathway analysis. For MEC, a complete or potentially complete exposure pathway must include the following components: 1) a source (e.g., locations where MEC are expected to be found); 2) access (e.g., controlled or uncontrolled access, items on the surface or within the subsurface); 3) an activity (e.g., non-intrusive grounds maintenance or intrusive construction); and 4) receptors (e.g., Navy personnel, construction workers, recreational users, authorized visitors, or trespassers). It is important to recognize that environmental mechanisms (e.g., erosion) and/or human intervention may result in the repositioning of MEC.

For MC, a complete or potentially complete exposure pathway must include the following components: 1) a source (e.g., locations where MC are expected to be found); 2) an exposure medium (e.g., surface soil); 3) an exposure route (e.g., dermal contact); and 4) receptors (e.g., Navy personnel, construction workers, recreational users authorized visitors, or trespassers). If the point of exposure is not at the same location as the source, the pathway may also include a release mechanism (e.g., volatilization) and a transport medium (e.g., air).

The interactions between the source and receptors are assessed differently between MEC and MC. For MC, interaction between the source and receptors involves a release mechanism for the MC, an exposure medium that contains the MC, and an exposure route that places the receptor into contact with the contaminated medium. For MEC, interaction between the receptors and an MEC source has two components. The receptor must have access to the source and must engage in some activity that results in contact with individual MEC items within the source area.

As shown in the pathway analysis figures (Figure 5.4-4 and Figure 5.4-5), the potential for MEC and MC exists at the Pyro Area Outside Test Burn Pad. The figures identify the pathways through which site receptors, including Navy personnel and contractors, and visitors, could come into contact with or be impacted by MEC and MC.

Figure 5.4-4, MEC Exposure Pathway Analysis, at the end of Section 5.4.11, depicts a potential for MEC to be present at the site (in the concrete basins) and accessed by site receptors through surface and subsurface soils during intrusive activities. Human receptors (Navy personnel, contractors, and visitors) may be exposed to MEC during site investigations or from future land use changes that may require the demolition of the concrete basins.

Figure 5.4-5, MC Exposure Pathway Analysis, at the end of 5.4.11 shows, that a potential for MC at the site exists. The figure identifies the exposure pathways through which site receptors could come in contact with or be impacted by MC. A potentially complete pathway exists for human receptors (Navy personnel, contractors and visitors) through ingestion, dermal contact and inhalation (dust) of surface and subsurface soils. Human receptors could be exposed to MC during site investigations or from future land use changes. If there is dermal contact, the potential for ingestion exists as well.

A graphical illustration of the details of the CSM is included in Figure 5.4-6 at the end of Section 5.4.11. The Pyro Area Outside Test Burn Pad graphical illustration was created to visually demonstrate the site characteristics as observed and determined by the data collection team. The graphical illustration shows the location of the two concrete testing basins, covered storage shed, and dumpsters relative to the surrounding buildings used for pyrotechnics. The concrete basins are located on a grassy area surrounded by a fence. All precipitation infiltration and surface water runoff would flow in the direction of the identified manhole following site topography. The suspected MC area is shown with a red dotted line.

Figure 5.4-4: MEC Exposure Pathway Analysis

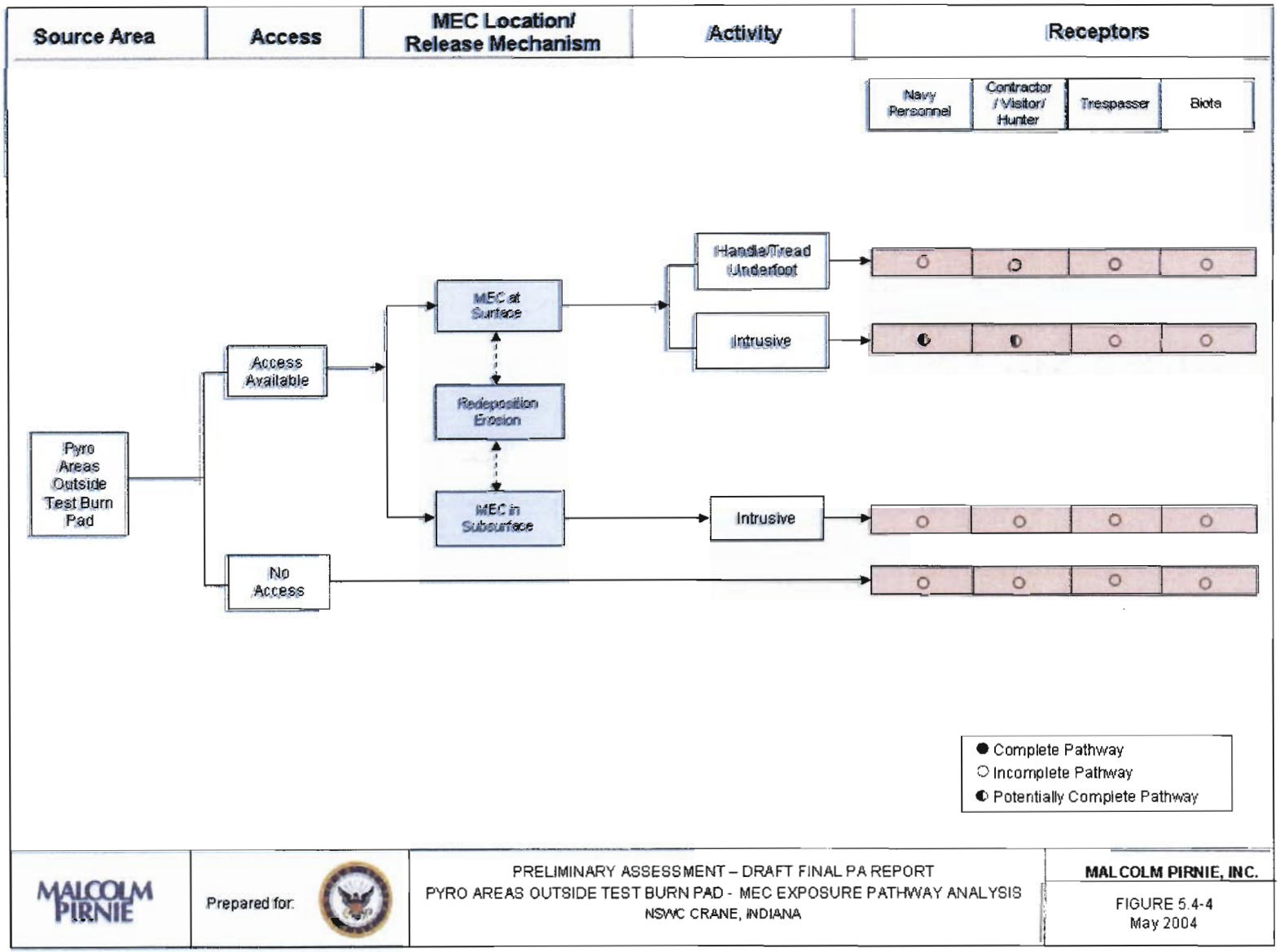

Figure 5.4-5: MC Exposure Pathway Analysis

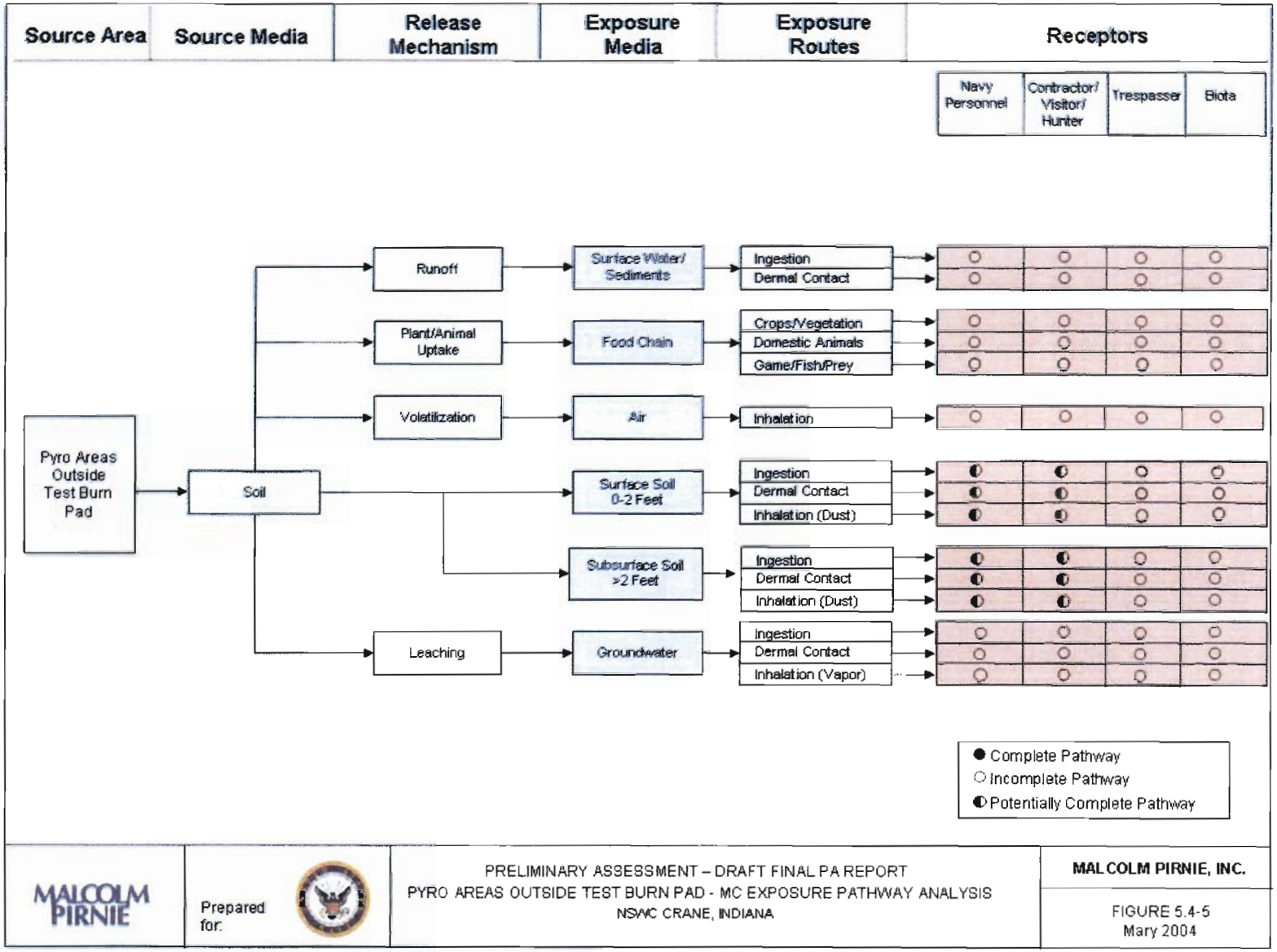

FIGURE 5.4-6
PYRO AREAS OUTSIDE TEST BURN PAD GRAPHICAL ILLUSTRATION

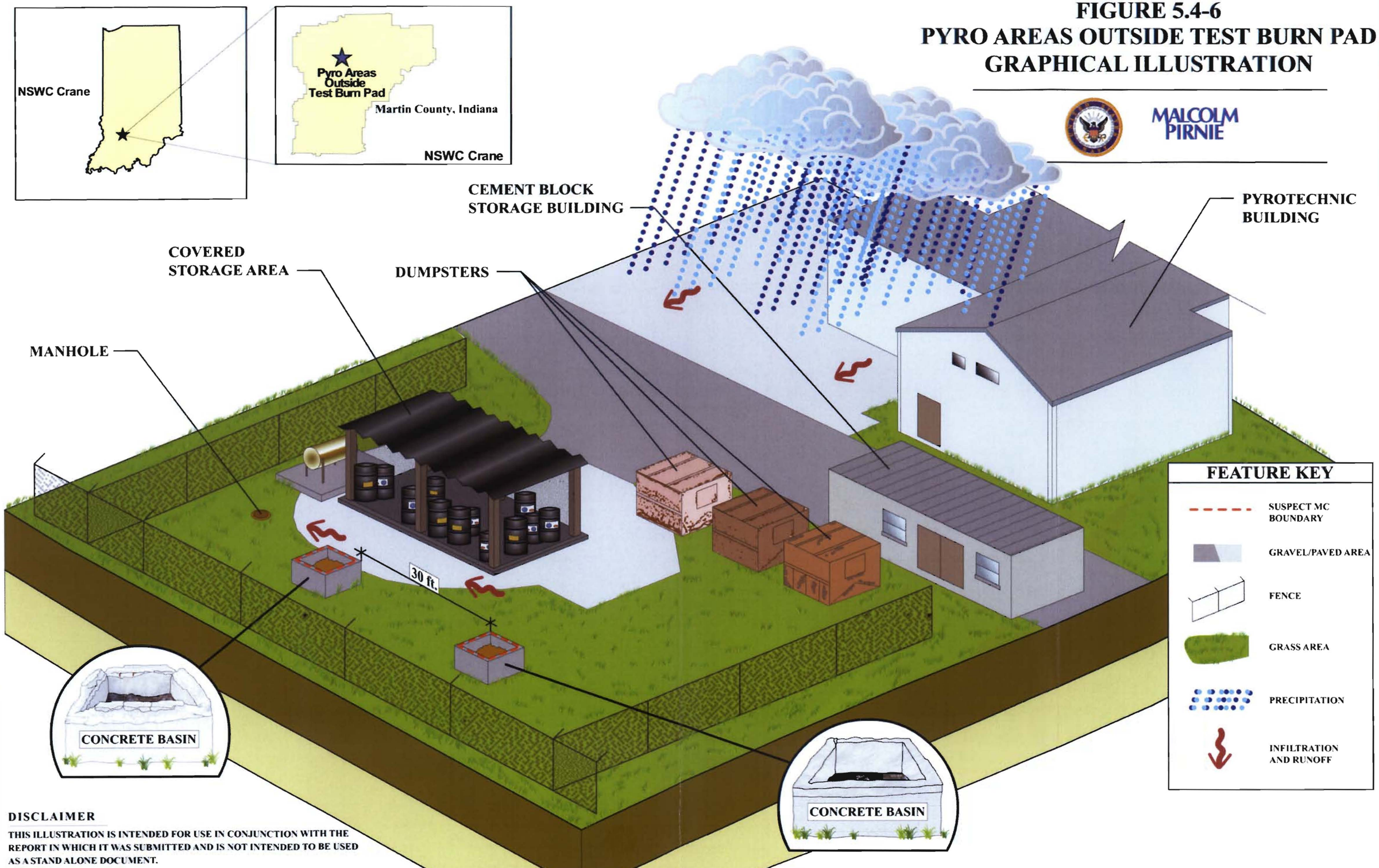

DISCLAIMER

THIS ILLUSTRATION IS INTENDED FOR USE IN CONJUNCTION WITH THE REPORT IN WHICH IT WAS SUBMITTED AND IS NOT INTENDED TO BE USED AS A STAND ALONE DOCUMENT.

5.4.12. Summary

The history of the Pyro Area Outside Test Burn Pad indicates its use for testing of various pyrotechnics (i.e. flares, signals, smoking screens, etc.) from 1984 through 1985. No evidence of MEC was observed at the Pyro Area Outside Test Burn Pad; however, the concrete testing basins were in poor condition indicating that testing occurred inside the basins. It was Navy policy at the time to remove ordnance and related debris immediately after testing. Dirt and ash were observed in the concrete basins. MC associated with the types of munitions known to have been used at the site include a combination of various chemicals that are contained in burning-type colored smoke munitions and explosive-type colored smoke munitions. Some chemicals used in typical smoke compositions include heavy metals, perchlorate, zinc oxide, and sodium chloride. Chemicals used in compositions for photoflash and spotting charged include magnesium, aluminum, potassium perchlorate, and barium nitrate.

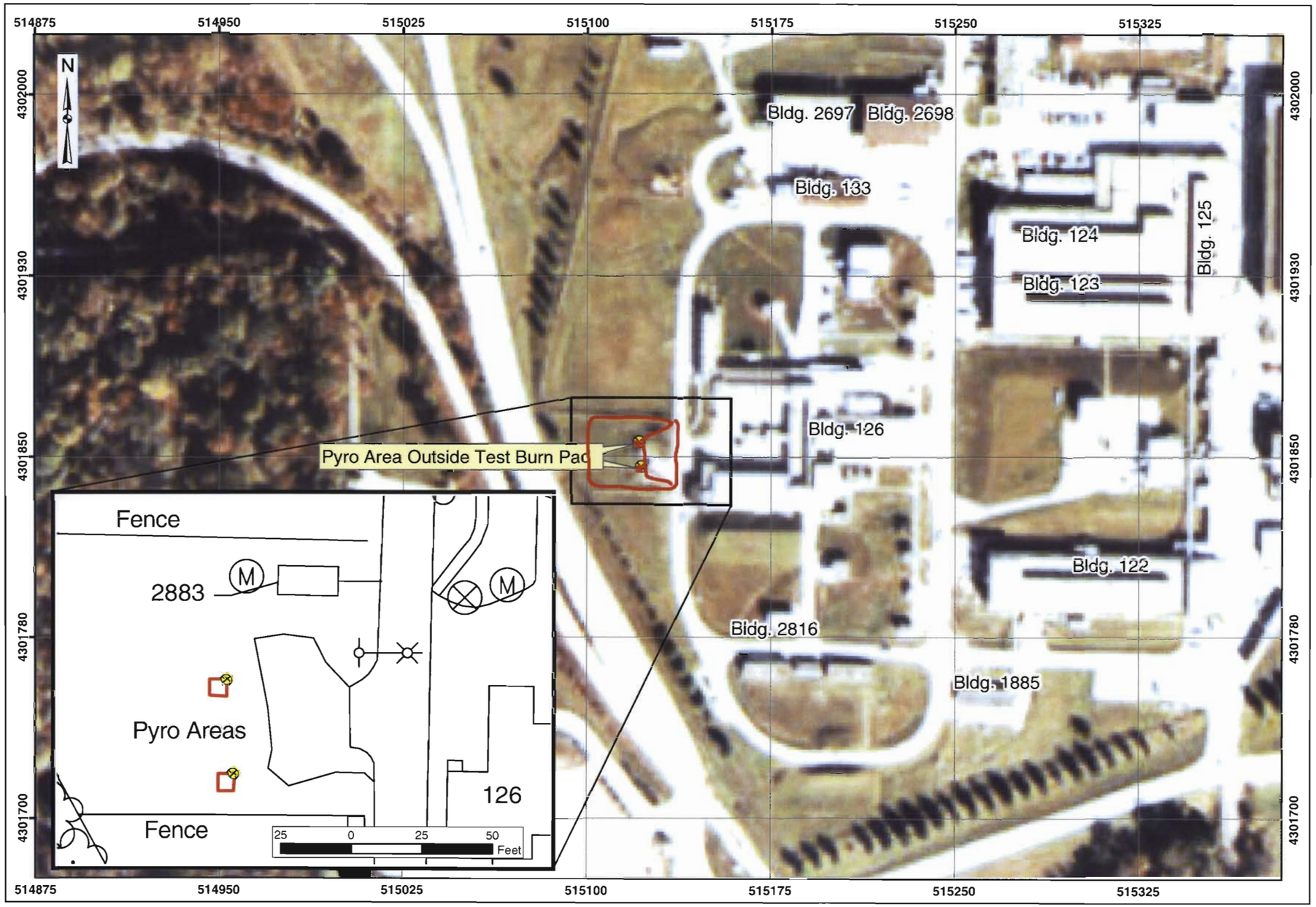

Preliminary Assessment
NSWC Crane, Indiana

MALCOLM PIRNIE

Map 5.4-1
Visual Survey
Pyro Area Outside Test Burn Pad

Legend

- Installation Boundary
- GPS Location
- Pyro Area Outside Test Burn Pad

25 0 25 50 75 Meters

Data Source: 1998 Aerial Photography; NSWC Crane CAD; NSWC Crane

Coordinate System: UTM Zone 16N
Datum: NAD 83
Units: Meters

Contract: N62472-02-D-1300
Edition: Revised Draft Final Preliminary Assessment
Date: May 2004

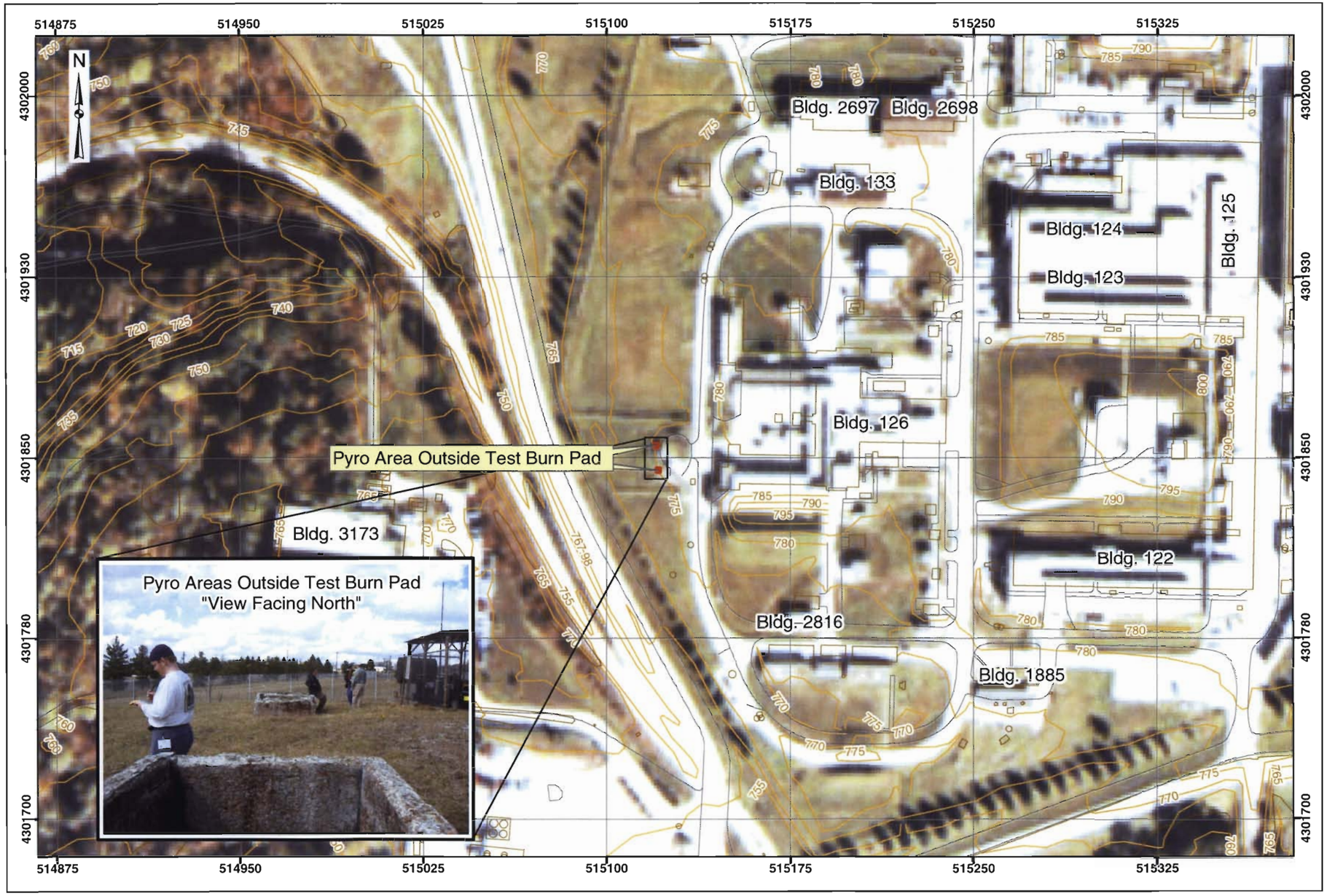

Preliminary Assessment
NSWC Crane, Indiana

MALCOLM PIRNIE

Map 5.4-2
Range/Site Details
Pyro Area Outside Test Burn Pad

Legend

- Installation Boundary
- Structures
- Roads
- Contours
- Pyro Area Outside Test Burn Pad

25 0 25 50 75 Meters

Data Source: 1998 Aerial Photography; NSWC Crane CAD; NSWC Crane

Coordinate System: UTM Zone 16N
Datum: NAD 83
Units: Meters

Contract: N62472-02-D-1300
Edition: Revised Draft Final Preliminary Assessment
Date: May 2004

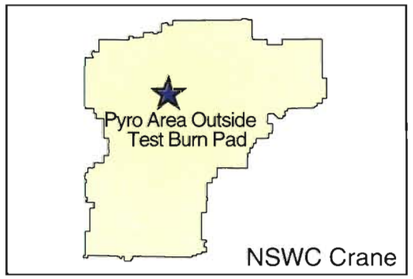

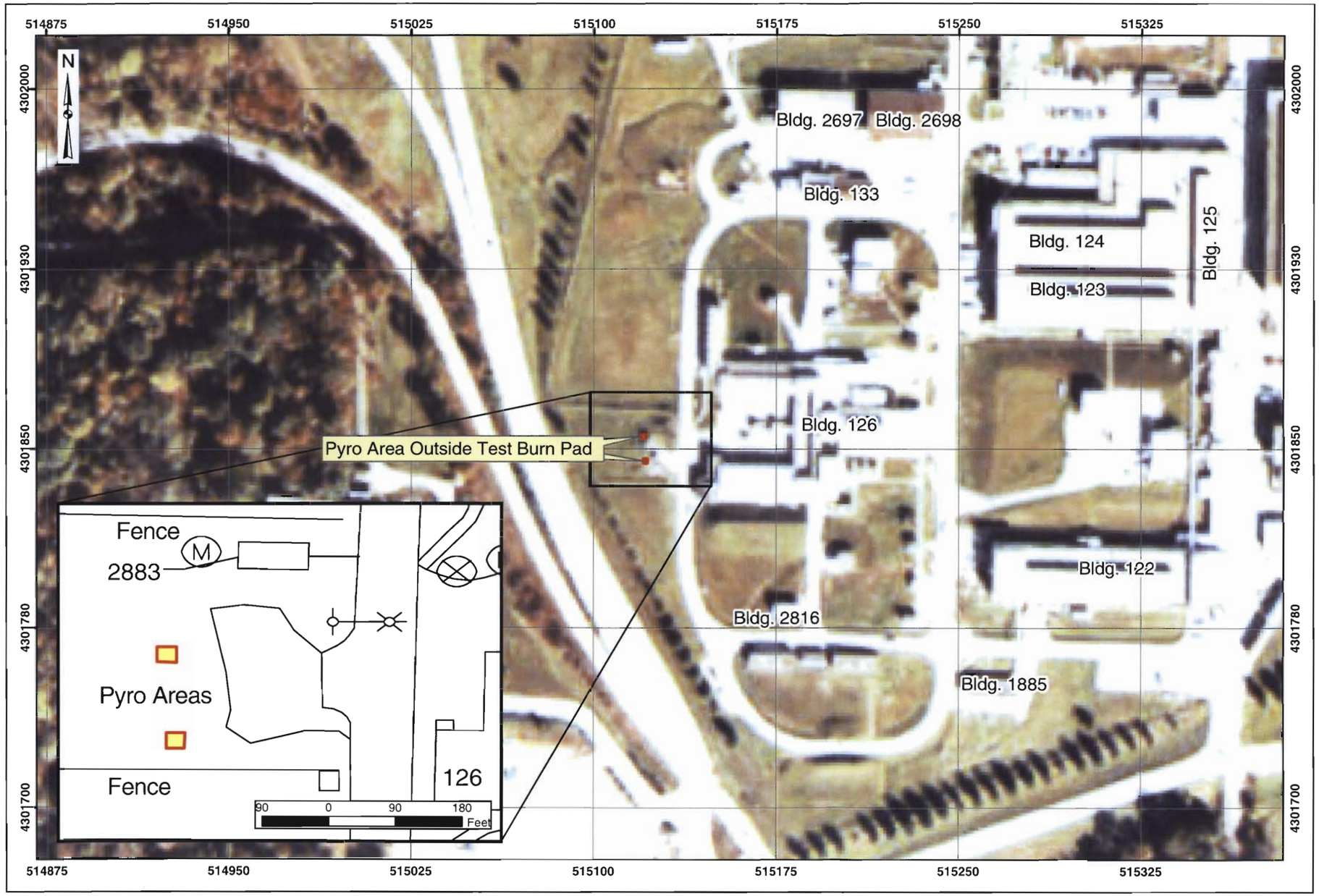

Preliminary Assessment
NSWC Crane, Indiana

MALCOLM PIRNIE

Map 5.4-3
Munitions Characterization
Pyro Area Outside Test Burn Pad

Legend

Installation Boundary

Pyro Area Outside Test Burn Pad

MEC Presence

Known

Suspect

MEC Presence was determined through review of historical documentation, interviews, and/or visual survey.

25 0 25 50 75 Meters

Data Source: 1998 Aerial Photography; NSWC Crane CAD; NSWC Crane

Coordinate System: UTM Zone 16N
Datum: NAD 83
Units: Meters

Contract: N62472-02-D-1300
Edition: Revised Draft Final Preliminary Assessment
Date: May 2004

5.5. TEST PADS ON HILL BEHIND B-198

5.5.1. History and Site Description

The Test Pads on Hill Behind B-198 are located in the central-western portion of NSWC Crane as shown in Map 2.1-1. The 0.01-acre area designated as the Test Pads on Hill Behind B-198 is the circular sand test pads located northeast of Building 198. The range inventory estimated the site acreage to be 0.1; however, the perimeter of the circular test pads was calculated by the data collection team. The circular sand test pads are situated in the middle of cleared woodland area as shown in Figure 5.5-1. A concrete holding tank is located east of the pads in a lower topographic area. Remnants of drainage piping discharging into the holding tank were observed along the perimeter of the pads. The site is located near the same general area as SWMU 18/13, Loading and Filling Area Buildings.

Figure 5.5-1: View of Test Pads on hill Behind B-198

The Test Pads on Hill Behind B-198 were used from 1983 through 1985 for the development and testing of safe disposal methods for various types of dyes. Personnel at NSWC Crane developed and tested an item constructed of a 2.75-inch warhead that functioned through the use of a

blasting cap detonating a C-4 booster, which then detonated a Baratol imploding charge. The imploding charge sublimed dye pellets that were contained within the warhead that formed a colored smoke cloud. The document, "Special Job Procedure for testing of 2.75 –Inch Warhead at Test Site Behind Building 198", obtained from the Environmental Department indicated that the project was to test newly developed 2.75-inch colored target markers. In addition to the Special Job Procedure document, the file also contained military specifications for the dye materials that were being tested. The file also indicated that the M18 Smoke Hand Grenade was simultaneously tested at the site. The Special Job Procedure document for this testing area also stated that all testing materials and associated debris, including "wasted sand", were to be removed from the testing area. No documentation was found to indicate the procedures at this specific site.

Identified 1952 and 1966 aerial photographs (Figure 5.5-2 and Figure 5.5-3) show a cleared/disturbed area behind Building 198. Installation personnel did not have any knowledge of prior uses of this area during 1952 or 1966. Although soil disturbance is visible in the 1952 and 1966 aerial photographs, no historic records were found supporting its use; thus, the cause of the cleared/disturbed area is not known.

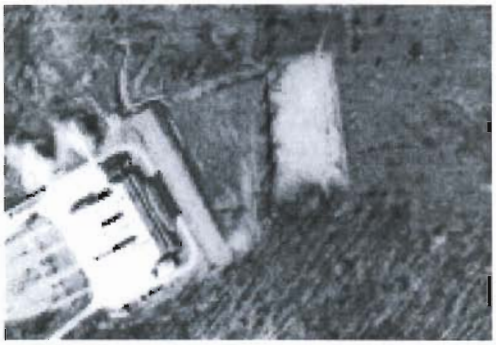

Figure 5.5-2 1952 aerial photograph

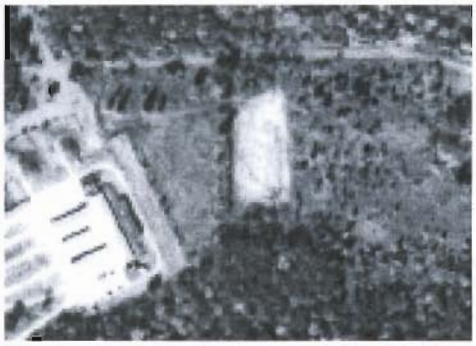

Figure 5.5-3 1966 aerial photograph

The testing area was proposed for other testing, but due to environmental concerns the site was not used after 1985. Environmental concerns included the creation of additional environmental and hazardous waste disposal problems. Other proposed testing would have also resulted in the spread of an unpredictable amount of potentially harmful airborne pollutants. .

5.5.1.1.Topography

The Test Pads on Hill Behind B-198 are located in the central portion of NSWC Crane. The site is located on a relatively flat parcel of land that slopes significantly to the northeast. The elevation of the site is approximately 660 feet.

5.5.1.2.Geology

There are no wells located directly on or in the immediate vicinity of the Test Pads on Hill Behind B-198; therefore, the specific site geology is unknown. A description of the regional geology can be found in Section 3.3.

5.5.1.3.Soil and Vegetation Types

The Test Pads on Hill Behind B-198 are located in a clearing of a woodland area. Various types of wild grasses and other vegetation cover the site. The surrounding area is heavily wooded with various aged trees and dense shrubbery.

According to the Martin County Soil Survey, the Zanesville silt loam (ZaC3), with 6 to 12 percent slopes, is present at the Test Pads on Hill Behind B-198 site. This moderately sloping, deep, well drained and moderately well drained soil is on ridge tops and the upper side slopes along natural drainage ways in the uplands. Available water capacity is moderate in these soils. Permeability is moderate above the fragipan and slow in the fragipan. Surface runoff is rapid; therefore, erosion is a concern with this soil type. Most areas of these soils are used for hay or pasture, but some are woodlands. The frost line is southern Indiana is approximately 2.5 feet bgs. Even though these soils contain fine grains, frost heave may not be a concern since the soils are very well drained. The test pads contain approximately six inches of sand, which is not native soil, located at the surface.

5.5.1.4.Hydrology

The Test Pads on Hill Behind B-198 are located within the central portion of the installation and lie within the central drainage basin. Surface water runoff from the site drains into an un-named

tributary which discharges into Boggs Creek. Boggs Creek eventually empties into the East Fork of the White River south of NSWC Crane.

5.5.1.5.Hydrogeology

There are no wells located directly on or in the immediate vicinity of the Test Pads on Hill Behind B-198; therefore, specific hydrogeology of the site is unknown. A description of the regional hydrogeology can be found in Section 3.6.

5.5.1.6.Cultural and Natural Resources

Although the potential for cultural resources exists for the area in which the site is located, there have not been any archeological or cultural sites identified near the site. No records were found identifying specific cultural resources at the Test Pads on Hill Behind B-198 in the Cultural Resources Survey from June 1992. No sites were identified on the Indiana Register of Historic Sites and Structures (Indiana State Register) or the National Register of Historic Places.

5.5.1.7.Endangered and Special Status Species

Threatened and endangered species for NSWC Crane are presented in Section 3.8. No evidence was found indicating the presence of the species listed at the Test Pads on Hill Behind B-198 or in the immediate surrounding area.

5.5.2. Visual Survey Observations and Results

A visual survey of the Test Pads on Hill Behind B-198 was conducted on March 18, 2003. The Malcolm Pirnie team included Mr. Dinh, Ms. Howard, and Mr. Stark. Mr. Keith and Mr. Brent of NSWC Crane accompanied the team. The survey team was able to walk 100% of the site. The perimeter of the test pads was mapped during the site reconnaissance. The total area surveyed by the team was approximately 0.01 acres. A visual depiction of the site reconnaissance is provided on Map 5.5-1 located at the end of Section 5.5. Additional range/site details are illustrated on Map 5.5-2 also located at the end of Section 5.5.

During the site reconnaissance, plastic drainage piping surrounding two sand covered circular areas (test pads) were observed. The test pads contain approximately six inches of sand, which is not native soil, located at the surface. The circular areas were covered with vegetation. The drainage piping discharged into a concrete holding tank located near the test pads. The concrete holding tank, into which the plastic drainage piping discharges, is located downgradient of the test pads. A fire hydrant and red identifying pole were observed near the concrete holding tank. Adjacent to the test pads was a rusted metal piece reportedly used as a shield during testing operations. The concrete holding tank observed at the site is shown in Figure 5.5-4, and the drainage piping is shown in Figure 5.5-5.

Figure 5.5-4: Concrete Holding Tank

Figure 5.5-5: View of plastic drainage piping surrounding test pads

No stressed vegetation was observed at the site. During the site reconnaissance, no evidence of MEC was observed.

5.5.3. Munitions and Munitions Related Materials Associated with the Site

This section describes the munitions or munitions related materials known or suspected to be at the site, including the types and estimated maximum penetration depths. This includes both MEC and non-hazardous munitions related scrap (e.g., fragmentation, base plates, inert mortar fins).

Based on the document entitled "Special Job Procedure for testing of 2.75-Inch Warhead at Test Site Behind Building 198", NSWC Crane personnel developed and tested an item constructed of a 2.75-inch warhead that functioned through the use of a blasting cap detonating a C-4 booster, which then detonated a Baratol imploding charge. The imploding charge sublimed dye pellets that were contained within the warhead. These dye pellets created a colored smoke cloud to be used as target markers. The data collection team located records indicating that approximately 200 rounds of the newly developed 2.75-inch M156 smoke warhead with the following types and quantities of dyes were tested in accordance to the Special Job Procedure at the site:

- 75 rounds with fluorescent dayglo dye
- 75 rounds with solvent 33 yellow dye
- 50 rounds with methyl-amino-anthraquinone

The 2.75-inch smoke warhead was used primarily for target marking or incendiary purposes. Each of the rounds identified above contained two pounds of dye. TNT or baratol in quantities less than six pounds were used for implosion, and C-4 was used for explosion in quantities less than one pound. Therefore, a total of 400 pounds of dye, a maximum of 1,200 pounds of TNT, and a maximum of 200 pounds of C-4 were used at the Test Pads on Hill Behind B-198.

In addition to the 2.75-inch smoke warhead testing, documentation obtained from the NSWC Crane Environmental Department indicated that M18 Smoke Hand Grenades in unknown quantities were also simultaneously tested at the site. The M18 Smoke Hand Grenades were a hand-thrown smoke grenade that emitted red, yellow, violet or green smoke for 50 to 90 seconds. These grenades used a pyrotechnic, delay-igniting fuze, which provided an approximate two-second delay.

Due to the nature of testing, a fragmentation radius is not associated with the pyrotechnics tested at the Test Pads on Hill Behind B-198. However, during testing an exclusion zone would have been established.

Based on the information obtained during the data collection process, no special consideration munitions (CWM filled munitions, electrically fuzed munitions, DU associated munitions) are known or suspected to have been used at the site; therefore, the Test Pads on Hill Behind B-198 are not suspected to contained special consideration MEC.

Additional technical information about these ordnance types is included in Appendix D.

5.5.4. MEC Presence

The entire site has been subdivided and categorized into one of three levels of MEC presence including: Known MEC Areas, Suspect MEC Areas, and Areas where No Evidence exists to indicate that MEC is known or is suspected to be at the site. The MEC presence is discussed below.

Map 5.5-3 illustrates the munitions characterization of the Test Pads on Hill Behind B-198 and is provided at the end of Section 5.5.

5.5.4.1.Known MEC Areas

There were no known MEC areas identified at the site.

5.5.4.2.Suspected MEC Areas

The entire 0.01-acre Test Pads on Hill Behind B-198 site is suspect for MEC. It is possible that fragmentation of the 2.75-inch smoke warheads and M18 smoke grenades could have impacted the site soils. Map 5.5-3 illustrates the suspect MEC area associated with the Test Pads on Hill Behind B-198.

5.5.4.3.Areas Not Suspected to Contain MEC

There are no areas at the Test Pads on Hill Behind B-198 not suspected to contain MEC.

5.5.5. Ordnance Penetration Estimates

Since records indicate that the munitions tested at the Test Pads on Hill Behind B-198 were pyrotechnics related to target marking and smoke screening, it is assumed that the minimal explosions associated with these types of munitions would only have penetrated the surface soils, less than one foot. It is also assumed that the Smoke Hand Grenades would only have penetrated the surface soils. Records indicate that sand was brought to the site to provide the barrier to prevent surface soil penetration and that the sand was to be removed after testing was completed. Sand was observed at the site during the site reconnaissance.

5.5.6. Munitions Constituents

MC associated with the types of munitions known to have been used at the Test Pads on Hill Behind B-198 include TNT, baratol, and C-4, as well as other non-explosives materials such as fluorescent dye, solvent 33 yellow dye, and methyl-amino- anthraquinone. In addition to these

listed MC, other chemicals may have been used in the experimental testing occurring at the Test Pads on Hill Behind B-198 that included items such as metals, 1,2 napthaquinone, antimony oxide, citric acid, dextrin, lead nitrate, and vanadium pentoxide. For a complete listing of chemicals used in experimental pyrotechnic compositions at the Test Pads on Hill Behind B-198, please refer to "Listed Items to be Tested at Ordnance Test Area, Rocket Range, B-198 R&D Test Area" located in Appendix B. MC are not anticipated to be present at the site due to the small quantity of MC associated with the munitions used at the Test Pads on Hill Behind B-198.

5.5.7. Contaminant Migration Routes

Studies have shown that ordnance can migrate due to environmental factors such as frost heave or erosion. If MEC were present at the site, it would only be located within the sand identified at the test pads (less than one foot bgs). The sand was brought to the site to prevent MEC from penetrating the surface soils. Since MEC would not have penetrated the sand or surface soils more than one foot bgs, which is above the frost heave line at the site, it is unlikely that the MEC could potentially migrate via frost heave. MEC, if present, may be located at the surface exposed by erosion and redeposition. Due to the high potential for erosion at the site due to on-site soil types, if MEC is present in the surface soils, MEC may migrate by erosion toward the east.

MC could migrate into the environment via the groundwater, soil, air, and surface water. MC are not anticipated to be present at the Test Pads on Hill Behind B-198; however, if MC are present at the site they could migrate via soil and groundwater. After closure of the site, it is not known if any sand was removed from the site. Since the soils present at the site are well drained and moderately well drained, if contaminants were present, they could leach from the soil to surface water and groundwater. Due to the combination of erosion and drainage of site soils, MC would migrate via these pathways into the un-named tributary discharging into Boggs Creek. Since the depth to groundwater and groundwater flow direction at the site are unknown, the specific contaminant migration route for MC in groundwater is unknown. The concrete holding tank, into which the plastic drainage piping discharges, is located downgradient of the test pads. All precipitation infiltration and surface water runoff would flow in the direction of the concrete holding tank following site topography.

5.5.8. Receptors

MEC exposure pathway for both human and ecological receptors pertaining to the Test Pads on Hill Behind B-198 is surface soil (zero to two feet). MEC receptors include Navy personnel, contractors, authorized visitors/hunters, and trespassers that may walk on the site. Wildlife, such as deer, rabbits, raccoons, and wild turkeys, may also come in contact with MEC at the site. See Section 5.5.4 for details on the likelihood of MEC at the site.

MC exposure pathways for both human and ecological receptors pertaining to the Test Pads on Hill Behind B-198 are the food chain and surface soil (zero to two feet). Human receptors would be affected through direct dermal contact, ingestion, or inhalation of soils. Human receptors may also contact contaminants through the food chain, as hunting is permitted at NSWC Crane and contaminants may bio-accumulate in animals. Navy personnel are the most likely to have repeated and lengthy exposures, where as contractors and visitors will have a diminished duration or limited frequency of exposure to MC in the surface soil or biota. Ecological receptors of contaminants include plant and animal life living on or near the site. Vegetation, such as grass, within the area is eaten by wildlife, such as deer, rabbits, raccoons, and birds. Endangered and threatened species that could visit the site include the bald eagle, which has a large hunting range, limiting its exposure at the site. Routes of exposure would include dermal contact, ingestion of soils, or ingestion of soil eating invertebrates. Plant uptake is mostly limited to near surface adsorption through the root systems. There is no known use of groundwater at the installation, so groundwater receptors are not included in this analysis. See Section 5.5.6 for details on the likelihood of MEC at the site.

5.5.8.1.Nearby Populations

NSWC Crane makes up the majority of Martin County. The rest of Martin County is essentially rural with some residential areas surrounding NSWC Crane. Martin County has a population of 10,383, which comprises 0.16 percent of the state's population. The population per square mile in Martin County is 30.9. NSWC Crane is the second largest employer in southwest Indiana with over 3,400 Navy employees and over 550 Army employees. A Combined Bachelors Quarters (approximately 36 rooms) and family housing (approximately 30 units) are located at NSWC Crane.

5.5.8.2. Buildings Near/Within Site

Test Pads on Hill Behind B-198 are located northeast of Building 198. Building 198 is currently used for research and development. The Test Pads on Hill Behind B-198 are separated from Building 198 by approximately 2,000 feet of grass and woodlands. Additional Navy buildings are located around Building 198. Buildings or structures located within the perimeter of the site include a PVC drainage pipe and above ground concrete holding tank formerly used for potential contamination containment, fire hydrant, and rusted metal piece assumed to be used for protection during testing operations.

5.5.8.3. Utilities On/Near Site

The nearby buildings and facilities have utilities. NSWC Crane did not have utility maps available for review. The Public Works Department indicated that utility maps did not exist and that field verification of utilities would be required. A fire hydrant was observed near the concrete holding tank at the site, indicating that an underground water line exists at the site; however, no maps or records exist to document the location of the water line. The underground water line could provide a preferred conduit for MC migration.

5.5.9. Land Use

The Test Pads on Hill Behind B-198 were previously used for testing and are considered closed. Prior to testing activities at the site, the site and surrounding areas were undeveloped. Currently, the site and immediate surrounding areas are vacant woodlands; however, the site may potentially be used for hunting. Due to the environmental concerns listed above, the land use of the site and surrounding areas is not anticipated to change for the foreseeable future; therefore, the reasonably anticipated future land uses for the area are to remain closed and as a vacant woodland area with occasional hunting.

5.5.10. Access Controls / Restrictions

Access to NSWC Crane is restricted. The NSWC Crane property is surrounded by locked, secured gates, with security at all entrances, as well as a security patrol. There are no access

controls or restrictions in place to limit access to the Test Pads on Hill Behind B-198 once on the installation. Navy personnel, contractors, visitors and hunters are not specifically restricted from the Test Pads on Hill Behind B-198; however, since Building 198 is a research and development building, individuals within the area should check in with personnel located inside B-198. The Test Pads on Hill Behind B-198 are located in a remote area, which may restrict access. There are no known zoning/land use restrictions for the Test Pads on Hill Behind B-198.

5.5.11. Conceptual Site Model

This CSM was developed following guidance documents issued by the USEPA for hazardous waste sites and the USACE for OE sites. Guidance documents included the USEPA's Guidance for Conducting Remedial Investigations and Feasibility Studies under CERCLA (EPA/540/G-89/004) and the USACE CSM Guidance Development of Integrated Conceptual Site Models for Environmental Ordnance and Explosives (OE) Sites, which was final as of February 2003.

The CSM describes the site and its environmental setting. The CSM presents information regarding: 1) MEC and/or MC known or suspected to be at the site; 2) current and future reasonably anticipated or proposed uses of the real property; and 3) actual, potentially complete, or incomplete exposure pathways that link them. The CSM is the basis for the risk evaluation, prioritization, and remediation cost estimate.

The CSM is presented in a series of information profiles that present information about the site. The information profiles are included Table 5.5-1.

Table 5.5-1: Conceptual Site Model Information Profiles – Test Pads on Hill Behind B-198		
Profile Type	**Information Needs**	**Preliminary Assessment Findings**
Range/Site Profile	Installation Name	NSWC Crane
	Installation Location	Crane, Martin County, Indiana
	Range/Site Name	Test Pads on Hill Behind B-198
	Range/Site Location	Northeast of Building 198
	Range/Site History	Used for testing of newly developed 2.75-inch smoke warheads for target markers from 1983 through 1985. Simultaneously, M18 smoke grenades were also tested at the site.
	Range/Site Area and Layout	Approximately 0.01 acres
	Range/Site Structures	Currently contains a PVC drainage pipe and above ground concrete holding tank formerly used for potential contamination containment, fire hydrant, and rusted metal piece assumed to be used for protection during testing operations.
	Range/Site Boundaries	N: Undeveloped property and Highway 45 S: Undeveloped property and Building 198 E: Undeveloped property and H-333 W: Undeveloped property and Building 198
	Range/Site Security	The installation is fenced; however, the Test Pads on Hill Behind B-198 are not fenced. The site is located in a remote area.
Munitions/ Release Profile	Munitions Types	2.75-inch smoke warheads, M18 smoke grenades
	Maximum Probability Penetration Depth	Munitions were deployed on the ground surface and are not expected to penetrate below one foot of the ground surface.
	MEC Density	Minimal range related debris is expected to be at the site based upon the Navy operating procedures to collect and remove related debris immediately after testing.
	MEC Scrap/Fragments	None observed during site visit.
	Associated Munitions Constituents	Minimal amounts of TNT, baratol, and C-4, as well as other non-explosives such as metals, fluorescent dye, solvent 33 yellow dye, and methyl-amino-anthraquinone.

Table 5.5-1: Conceptual Site Model Information Profiles – Test Pads on Hill Behind B-198

Profile Type	Information Needs	Preliminary Assessment Findings
	Migration Routes/Release Mechanisms	If MEC were present at the site, it would only be located within the surface soils (less than one foot bgs), which is above the frost heave line at the site; however, soils within the area are susceptible to erosion. Therefore, if MEC is present at the site, there is potential for MEC migration through erosion. MC are not anticipated to be present at the site; however, if MC are present, it may migrate via soil and groundwater. If underground utilities (e.g., water) are present at the site, they may be a preferred migration pathway for contamination.
Physical Profile	Climate	Temperate climate zone, which has a wide temperature range between summer and winter.
	Topography	Flat with sloping to the southeast. The site is located at an elevation of approximately 660 feet.
	Geology	The area is located on the eastern flank of the Illinois Basin consisting of shale, sandstone, limestone, and coal beds. The specific geology of the site is unknown.
	Soil	Zanesville silt loam with 6 to 12 percent slopes is present at the site. These soils are moderately sloping, deep, well drained and moderately well drained, and located on ridge tops and the upper side slopes along natural drainage ways in the uplands.
	Hydrogeology	Available groundwater data from the 1940s indicates that limited water is located at 141 and 313 feet bgs, with the shallowest water level observed at 85 feet bgs. There are no wells located directly on or in the immediate vicinity of the Test Pads on Hill Behind B-198; therefore, specific hydrogeology of the site is unknown.
	Hydrology	Test Pads on Hill Behind B-198 are within the central drainage basin of NSWC Crane. Surface water runoff from the site drains east into an un-named tributary that empties into Boggs Creek. Boggs Creek discharges into the East Fork of the White River south of NSWC Crane.
	Vegetation	The site is covered with wild grasses and surrounded with dense vegetation including trees and shrubs.

Table 5.5-1: Conceptual Site Model Information Profiles – Test Pads on Hill Behind B-198

Profile Type	Information Needs	Preliminary Assessment Findings
Land Use and Exposure Profile	Current Land Use	The site is currently vacant.
	Current Human Receptors	Naval personnel, contractors, authorized visitors, and trespassers.
	Current Activities (frequency, nature of activity)	No Naval activity occurs at the site; however, hunting is possible.
	Potential Future Land Use	No change in land use is expected.
	Potential Future Human Receptors	Naval personnel, contractors, authorized visitors, and trespassers.
	Potential Future Land Use-Related Activities:	No future land use is expected.
	Zoning/Land Use Restrictions	No known zoning/land use restrictions.
	Demographics/Zoning	NSWC Crane employs approximately 4,000 personnel, both civilian and military. Martin County has a population of 10,383, which comprises 0.16 percent of the state's population. The population per square mile in Martin County is 30.9.
	Beneficial Resources	The NSWC Crane forest has been important to the re-establishment of deer, wild turkey, ruffed grouse, and eagles in Indiana. Timber is also harvested at NSWC Crane.
Ecological Profile	Habitat Type	Grasslands, Woodlands
	Degree of Disturbance	If current conditions continue, the degree of disturbance at the site will be low. Low indicates that the site is/will be unused, and habitat for species present are/will be undisturbed (i.e., undisturbed grasslands, woodlands).
	Ecological Receptors	
	Federal Endangered Species:	No federal endangered species are unknown at the site.
	Federal Threatened Species:	The Bald Eagle *(Haliaeetus leucocephalus)* could be located at the site based on the large hunting range of the eagle.
	State Endangered Species:	The potential for the Grasshopper sparrow, bobcat, osprey, timber rattlesnake, and yellow-crowned night heron exists; however, none have been identified at the site.

Table 5.5-1: Conceptual Site Model Information Profiles – Test Pads on Hill Behind B-198		
Profile Type	Information Needs	Preliminary Assessment Findings
	State Threatened Species:	The Bald Eagle (Haliaeetus leucocephalus) could be located at the site based on the large hunting range of the eagle.
	Other Ecological Receptors:	The habitat at the site and the surrounding area is home to many woodland wildlife species, such as deer, rabbits, raccoons, and wild turkeys. There is the potential for wildlife to burrow, forage, and nest on the site.
	Relationship of MEC/MC Sources to Habitat and Potential Receptors	Ecological receptors may come into direct contact with MEC/MC (in the soil or on the surface). Wildlife that inhabit or utilize the area may come into contact with MC that been incorporated into the food chain (bioaccumulated in plants and animals). Ecological receptors contacting MEC and creating an explosive hazard is not likely but should be considered.

A key element of the CSM is the exposure pathway analysis. For MEC, a complete or potentially complete exposure pathway must include the following components: 1) a source (e.g., locations where MEC are expected to be found); 2) access (e.g., controlled or uncontrolled access, items on the surface or within the subsurface); 3) an activity (e.g., non-intrusive grounds maintenance or intrusive construction); and 4) receptors (e.g., Navy personnel, construction workers, recreational users, authorized visitors, or trespassers). It is important to recognize that environmental mechanisms (e.g., erosion) and/or human intervention may result in the repositioning of MEC.

For MC, a complete or potentially complete exposure pathway must include the following components: 1) a source (e.g., locations where MC are expected to be found); 2) an exposure medium (e.g., surface soil); 3) an exposure route (e.g., dermal contact); and 4) receptors (e.g., Navy personnel, construction workers, recreational users, authorized visitors, or trespassers). If the point of exposure is not at the same location as the source, the pathway may also include a release mechanism (e.g., volatilization) and a transport medium (e.g., air).

The interactions between the source and receptors are assessed differently between MEC and MC. For MC, interaction between the source and receptors involves a release mechanism for the MC, an exposure medium that contains the MC, and an exposure route that places the receptor into contact with the contaminated medium. For MEC, interaction between the potential

receptors and an MEC source has two components. The receptor must have access to the source and must engage in some activity that results in contact with individual MEC items within the source area.

As shown in the pathway analysis figures (Figure 5.5-6 and Figure 5.5-7), potential exposure pathways for MEC and MC exists at the Test Pads on Hill Behind B-198. Given this potential, the figures identify the pathways through which site receptors, including Navy personnel, contractors/visitors/hunters, trespassers, and biota could come into contact with or be impacted by MEC and MC.

Figure 5.5-6, MEC Exposure Pathway Analysis, at the end of Section 5.5.11, depicts a potential for MEC to be present at the site and accessed by site receptors through surface soils. Human receptors (Navy personnel, contractors/visitors/hunters, and trespassers) may contact MEC at the surface during activities at the site such as walking, hiking, and hunting. Contractors could be exposed to MEC during site investigations or from future land use changes that may require intrusive construction activities. Ecological receptors (biota) at the site may disturb surface soils during foraging, nesting or other natural activities in which contact with MEC.

Figure 5.5-7, MC Exposure Pathway Analysis, at the end of 5.5.11, shows a potential for MC exists at the site. The figure identifies the exposure pathways through which site receptors may come in contact with or be impacted by MC. A potentially complete pathway exists for both human receptors (Navy personnel, contractors/visitors/hunters, and trespassers) and ecological receptors (biota) through ingestion, dermal contact and inhalation (dust) of surface soil. Human receptors could come into contact with contaminated soils at the surface during activities at the site such as walking, hiking, and hunting. Contractors could be exposed to MC during site investigations or from future land use changes. Biota at the site may disturb surface soils during foraging, nesting or other natural activities. Surface soil disturbance by either human receptors or ecological receptors results in direct contact with the soil and potentially creates dust, which could be inhaled. If there is dermal contact, the potential for ingestion exists as well. Bioaccumulation in game animals can pose a threat to human receptors, since hunting is allowed at NSWC Crane. Biota that consume contaminated site vegetation can affect the food chain.

A graphical illustration of the details of the CSM is included in Figure 5.5-8 at the end of Section 5.5. The Test Pads on Hill Behind B-198 graphical illustration was created to visually

demonstrate the site characteristics as observed and determined by the data collection team. The graphical illustration shows the location of the plastic drainage piping surrounding two circular test pads. The test pads contain approximately six inches of sand, which is not native soil, located at the surface. The concrete holding tank, into which the plastic drainage piping discharges, is located downgradient of the test pads. All precipitation infiltration and surface water runoff would flow in the direction of the concrete holding tank following site topography. The test pads are partially covered with vegetation and surrounded by woodlands. The locations of the fire hydrant, red pole, and rusted metal piece in relation to the test pads are shown on the figure. In addition, the graphical illustration identifies the suspected groundwater flow direction in accordance with the depicted topography. The suspected MEC and MC area is shown with a red dotted line.

Figure 5.5-6: MEC Exposure Pathway Analysis

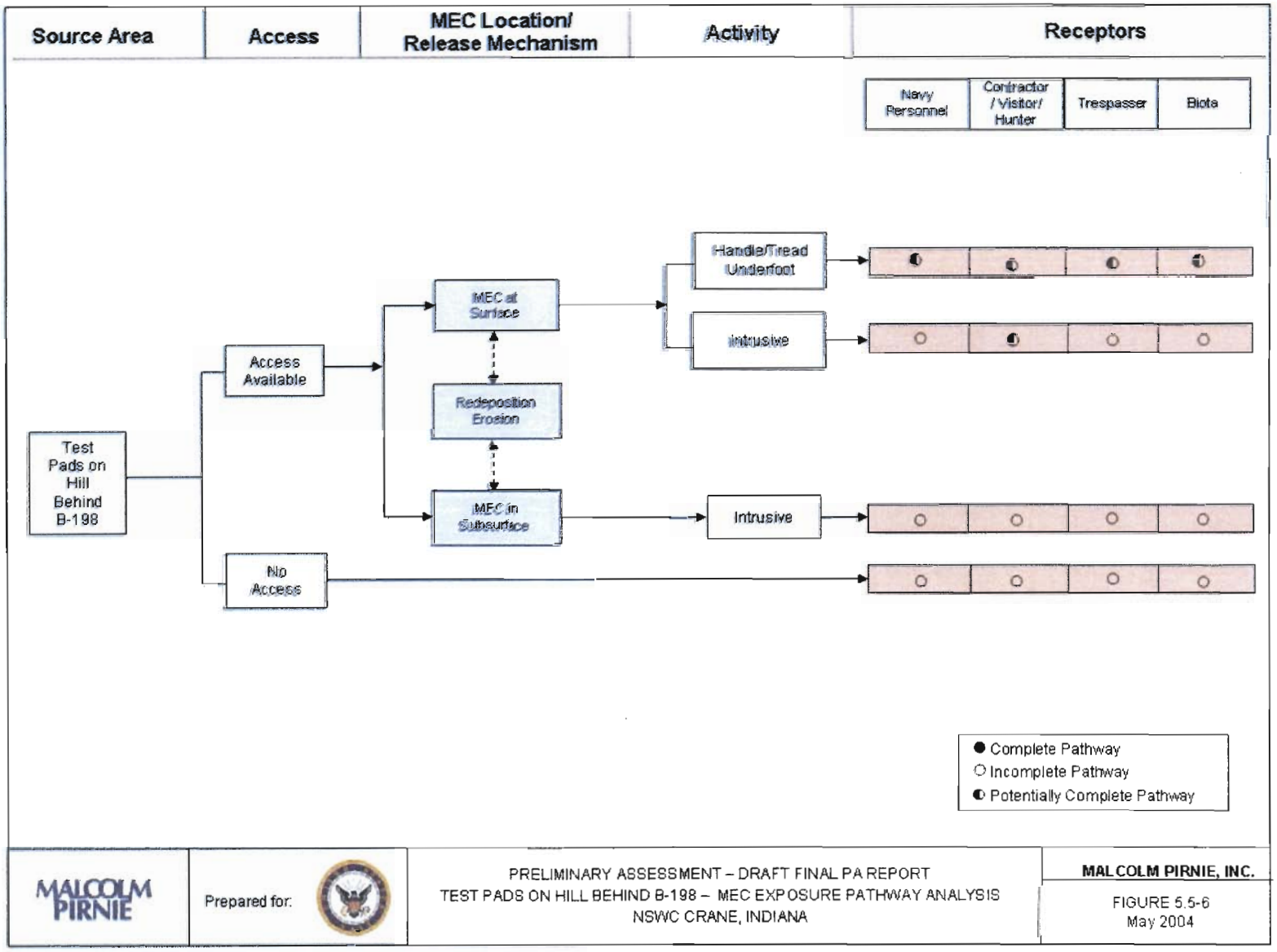

Figure 5.5-7: MC Exposure Pathway Analysis

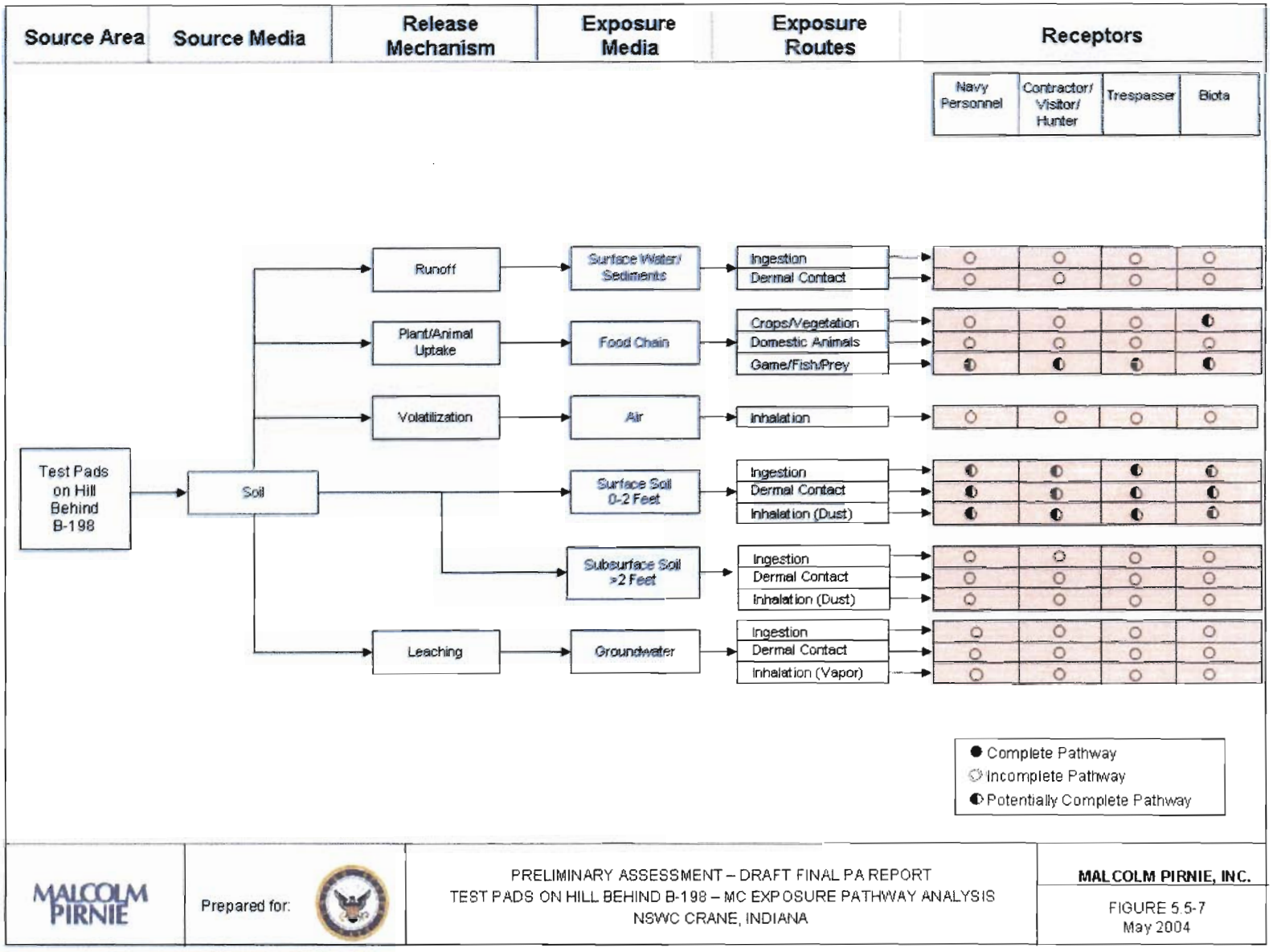

FIGURE 5.5-8
TEST PADS ON HILL BEHIND B-198
GRAPHICAL ILLUSTRATION

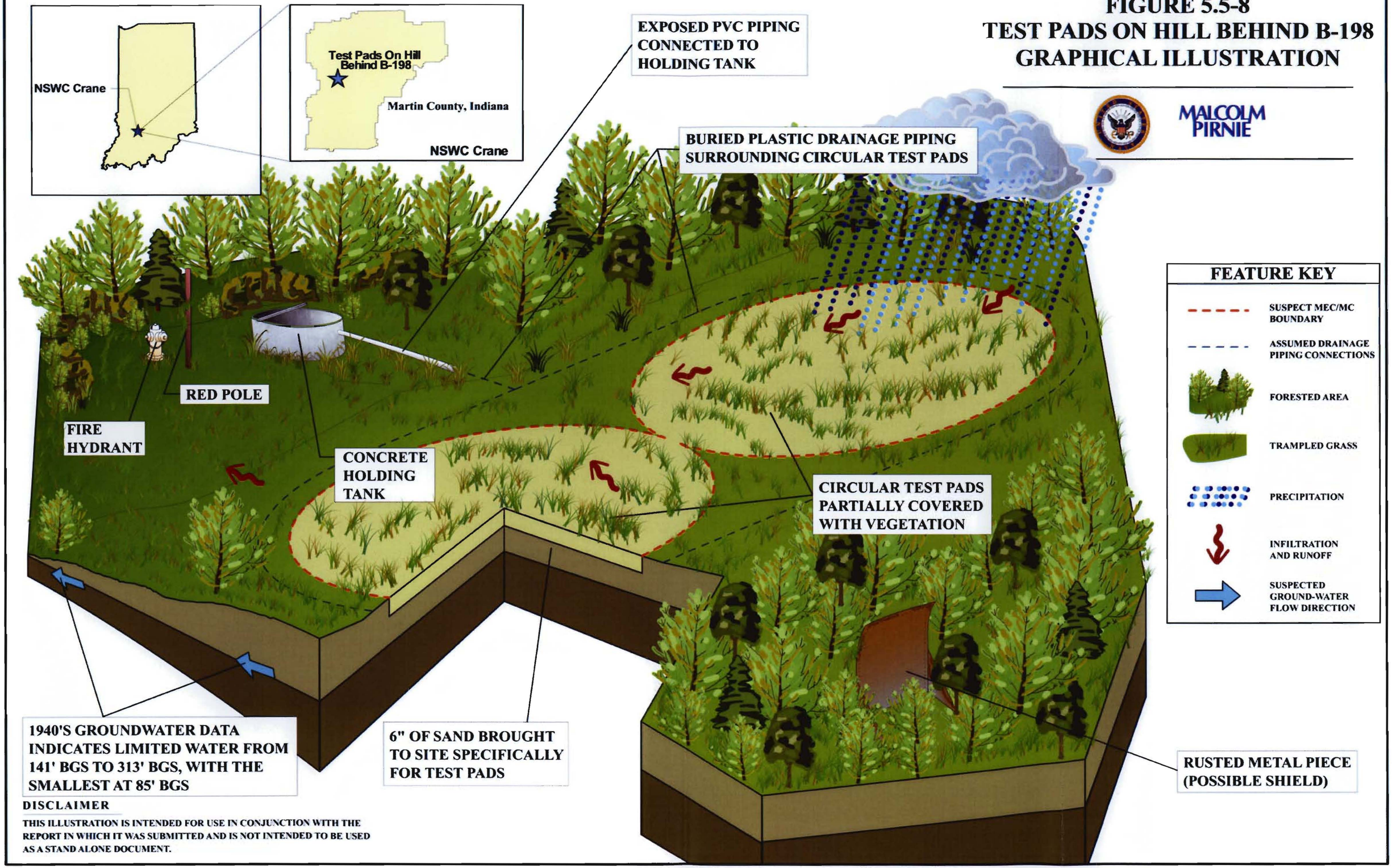

MALCOLM PIRNIE

DISCLAIMER

THIS ILLUSTRATION IS INTENDED FOR USE IN CONJUNCTION WITH THE REPORT IN WHICH IT WAS SUBMITTED AND IS NOT INTENDED TO BE USED AS A STAND ALONE DOCUMENT.

5.5.12. Summary

The history of the Test Pads on Hill Behind B-198 indicates its use for testing of newly developed 2.75-smoke warheads and M18 smoke grenades from 1983 through 1985. No evidence of MEC was observed at the Test Pads on Hill Behind B-198; however, documentation was identified that described testing activities, including specific testing procedures and quantities. It was Navy policy at the time to remove ordnance debris after testing, and in addition, the testing procedure indicated that sand was brought to the site and should be removed after testing was completed. No records were found to document MEC, MC, or sand removals. Sand was identified at the site during the site visit. MC associated with the types of munitions known to have been used at the site include TNT, baratol, and C-4, as well as other non-explosives materials such as fluorescent dye, solvent 33 yellow dye, and methyl-amino- anthraquinone. In addition to these listed MC, other chemicals may have been used in the experimental testing that included items such as metals, 1,2 napthaquinone, antimony oxide, citric acid, dextrin, lead nitrate, and vanadium pentoxide.

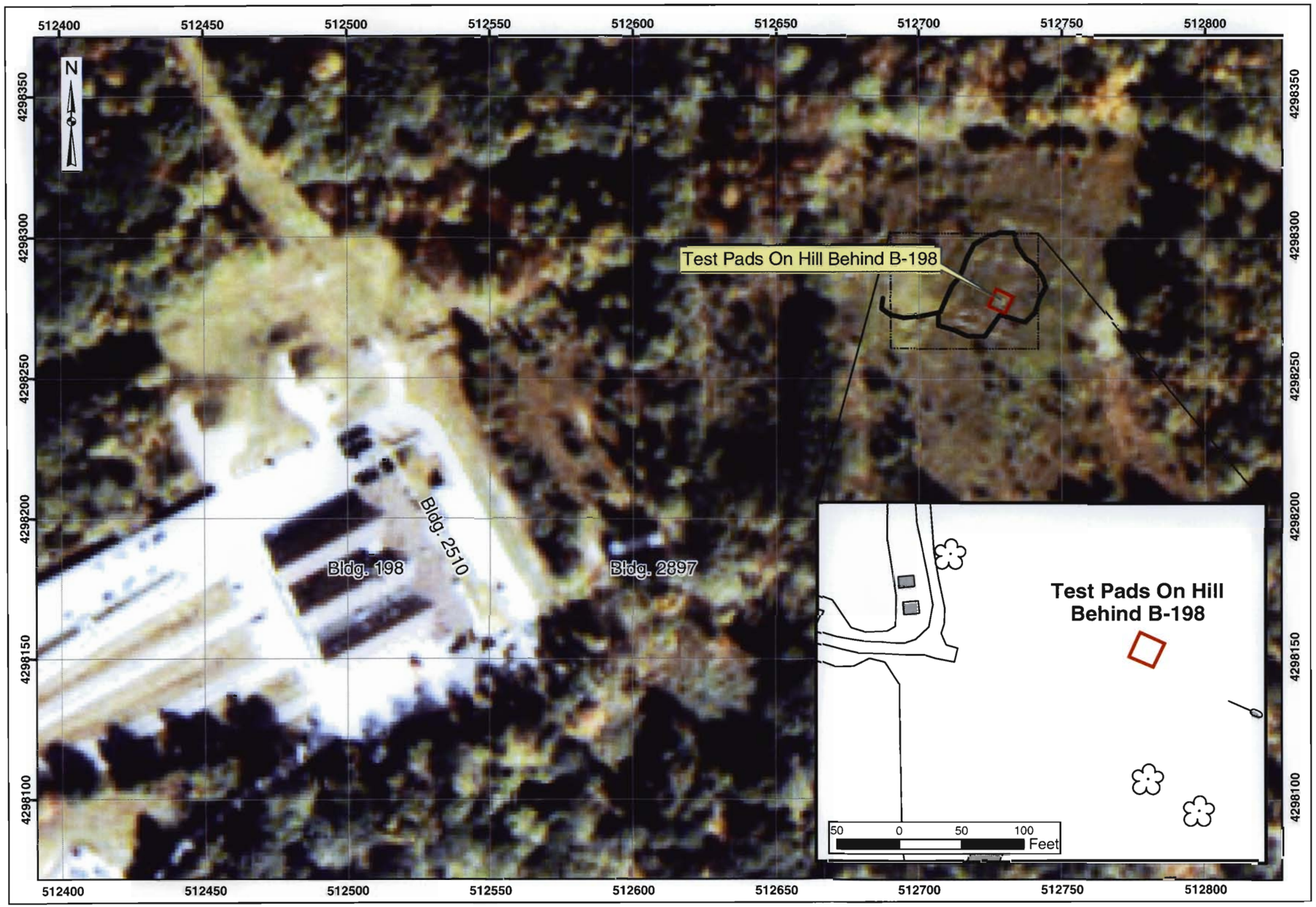

Preliminary Assessment
NSWC Crane, Indiana

MALCOLM PIRNIE

Map 5.5-1
Visual Survey
Test Pads On Hill Behind B-198

Legend

- Installation Boundary
- Site Reconnaissance
- Test Pads On Hill Behind B-198

Site Reconnaissance path is approximate

20 0 20 40 60 Meters

Data Source: 1998 Aerial Photography; NSWC Crane CAD; NSWC Crane

Coordinate System: UTM Zone 16N
Datum: NAD 83
Units: Meters

Contract: N62472-02-D-1300
Edition: Revised Draft Final Preliminary Assessment
Date: May 2004

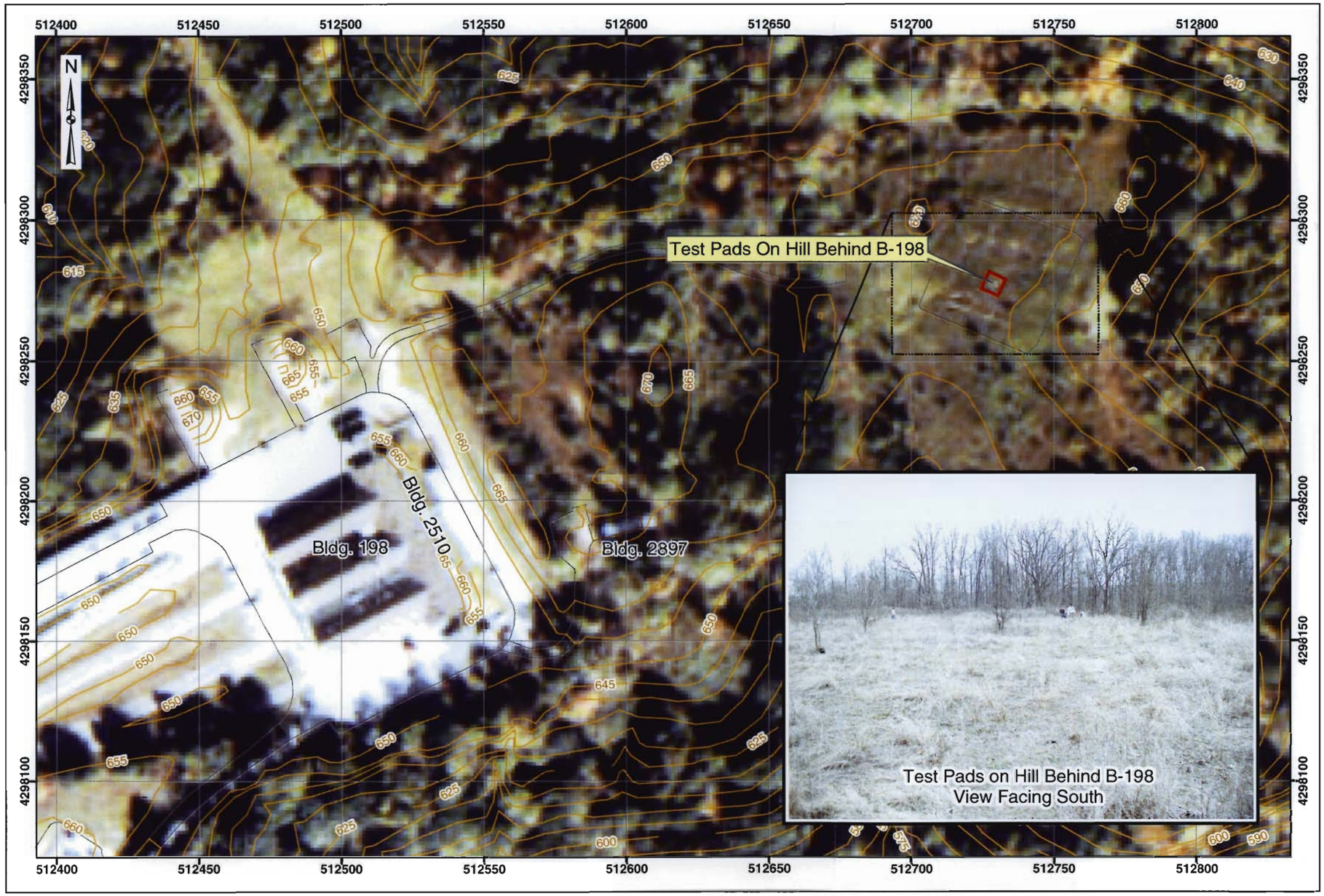

Preliminary Assessment
NSWC Crane, Indiana

MALCOLM PIRNIE

Map 5.5-2
Range/Site Details
Test Pads On Hill Behind B-198

Legend

- Installation Boundary
- Test Pads On Hill Behind B-198
- Structures
- Roads
- Contours

20 0 20 40 60 Meters

Data Source: 1998 Aerial Photography; NSWC Crane CAD; NSWC Crane

Coordinate System: UTM Zone 16N
Datum: NAD 83
Units: Meters

Contract: N62472-02-D-1300
Edition: Revised Draft Final Preliminary Assessment
Date: May 2004

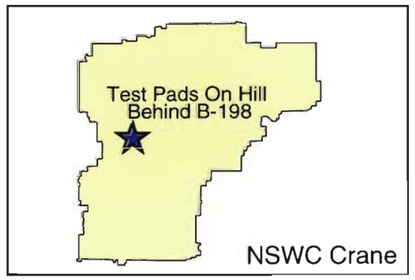

Preliminary Assessment
NSWC Crane, Indiana

MALCOLM PIRNIE

Map 5.5-3
Munitions Characterization
Test Pads On Hill Behind B-198

Legend

Installation Boundary

Test Pads On Hill Behind B-198

MEC Presence

Known

Suspect

MEC Presence was determined through review of historical documentation, interviews, and/or visual survey.

20 0 20 40 60 Meters

Data Source: 1998 Aerial Photography; NSWC Crane CAD; NSWC Crane

Coordinate System: UTM Zone 16N
Datum: NAD 83
Units: Meters

Contract: N62472-02-D-1300
Edition: Revised Draft Final Preliminary Assessment
Date: May 2004

Appendix: A References

Text Sources:

A.T. Kearney, Inc. Preliminary Review/Visual Site Inspection Report of Naval Weapons Support Center, Crane, IN. March 1987.

Chief of Bureau of Yards and Docks. Subject: U.S. Naval Ammunition Depot, Burns City, Indiana - revision of boundary lines. July 14, 1941.

Department of the Army Office of the Project Manager for Chemical Demilitarization and Installation Restoration, Aberdeen Proving Ground, Maryland. Installation Assessment of Naval Weapons Support Center, Crane, Indiana, Record Evaluation Report No. 117. March 1978.

Environmental Quality Office, Rock Island, Illinois. Environmental Impact Assessment for Open Burning/Detonation of Waste Munitions/Propellant. August 1975.

Geology and Hydrology of the Ammunition Burning Grounds. October 1987.

Indiana Department of Natural Resources, Division of Water. Water Resource Availability Reports for Indiana. Date unknown.

Naval Weapons Support Center, Crane, Indiana. Special Job Procedure; Procedure for Testing of 2.75-inch warheads at Test Site Behind Building 198. April 18, 1983.

Northern Division Facilities Engineering Command. Cultural Resources Survey, Crane Division Naval Surface Warfare Center, Crane, Indiana. June 1992.

Officer-in-Charge of Construction, Naval Ammunition Depot, Burns City, Indiana. Subject: Proposed Development Plan for Station. December 21, 1940.

Ordnance Environmental Support Office. Initial Assessment Study of Naval Weapons Support Center. Appendix E: Pyrotechnics Used at NWSC Crane from the Navy Assessment and Control of Installation Pollutants. Appendix D: Biological Features from the Navy Assessment and Control of Installation Pollutants. May 1983.

Ordnance Environmental Support Office, Activity Files. List of Items Tested to be Tested at Ordnance Test Area, Rocket Range, B-198 R&D Test Area. Date Unknown.

Reid, Robert L. and Rodgers, Thomas E. A Good Neighbor: The First Fifty Years at Crane 1941-1991. Historic Indiana Project, 1991.

U.S. Department of Agriculture, Soil Conservation Service. Soil Survey Martin County, Indiana. Issued September 1998.

Weeks, Harmon P. Purdue University in conjunction with the U.S. Navy and the National Fish and Wildlife Foundation. Check List of Birds, Crane Division, Naval Surface Warfare Center. Date unknown.

Correspondence:

Email from Douglas Johnson to Phil Keith. February 23, 2000. Subject: Info on Rockeye bomblets.

Email from Phil Keith to Sherry McCahill. November 3, 2000. Subject: Range Survey.

Email from Jack Kramer to Phil Keith. March 27, 2000. Subject: Re: Navy Range Survey.

Notes from interview of Retiree by Steve Shantz. March 16, 2000.

Interviews:

Allen, John. Personal interview by Julie Grim. March 20, 2003.

Brent, Thomas. Personal interview by Julie Grim. March 19, 2003.

Douda, Bernie, PhD. Personal interview by Julie Grim. March 19, 2003.

Keith, Philip. Personal interview By Julie Grim. March 19, 2003.

Schantz, Steve. Personal interview by Molly Howard. March 19, 2003.

Shouse, Steve. Personal interview by Denise Tegtmeyer. March 18, 2003.

Stoll, Linda. Personal interview by Denise Tegtmeyer. March 19, 2003.

Webster, Hank. Personal interview by Julie Grim. March 19, 2003.

Zitzman, Ron. Personal interview by Julie Grim. March 19, 2003.

Internet Sources:

Indiana Data and Statistics
http://www.state.in.us/isdh/dataandstats/fish/fish_99/lakes.htm

Indiana Department of Environmental Management Publications and Forms
http://www.state.in.us/idem/water/publications/reports.html

Indiana Department of Environmental Management US Fish and Wildlife
http://www.midwest.fws.gov/Endangered/lists/indiana-cty.html

Lower Wabash River Basin, by Keith Bobay
http://in.water.usgs.gov/atlasweb/lwab.pdf

NSWC Crane Natural Resources Guide
http://www.crane.navy.mil/newscommunity/Envir_NatRes_Guide.asp?bhcp=1

NSWC Crane History
http://www.crane.navy.mil/General/About/history.htm

Maps:

Electronic base map data dated 1998 was received from Tom Brent, Environmental Protection Specialist at NSWC Crane Division. No munitions related ranges or information is depicted on the maps but they establish base map references for the installation. The data layers included:

- Installation boundaries
- Installation landmarks (buildings, pads, roads)
- Topography
- Hydrology
- Environmental features (wetlands, habitat)
- Imagery (aerial photography from current and earlier time periods)

General Development Maps, Naval Surface Warfare Center, Crane Army Ammunition Activity, Crane, Indiana dated March 30, 2000. No munitions related ranges or information is depicted on the maps, but they provided current and updated installation references.

Map of U.S. Naval Ammunition Depot, Crane, Indiana. Public Works Officer, Ninth Naval District. June 30, 1943. (RG #71 Records of the Bureau of Yards & Docks, Naval Properties Case Files, Box 451, Burns City, Permit for Establishment of Banking Facility, National Archives, College Park, MD)

NSWC Crane Division. Location Plan, Detail "A" – Campus Area, Detail "B" – Warehouse Area, and Detail "C" – Burns City Gate. Last Revision February 5, 2003.

U.S. Naval Ammunition Depot, Crane, Indiana. New Launch and Locker Buildings, No. 141-A, 144-A and 149-A, Location Plan. Department of the Navy, Bureau of Yards and Docks, District Public Works Office, Ninth Naval District, Great Lakes, Illinois. June 6, 1951. (RG #71 Records of the Bureau of Yards & Docks, 903-Crane, Indiana, 519830)

U.S. Naval Ammunition Depot, Crane, Indiana. 3" Loading Line, General Plant Layout. Department of the Navy, Bureau of Yards and Docks, District Public Works Office, Ninth Naval District, Great Lakes, Illinois. January 31, 1955. (RG #71 Records of the Bureau of Yards & Docks, 903-32-907 Crane, Indiana)

Crane Naval Ammunition Depot, Indiana. Basic Loading Plant, General Plot Plan Building Locations. Department of the Navy, Bureau of Yards and Docks, District Public Works Office, Ninth Naval District, Great Lakes, Illinois. April 23, 1952. (RG #71 Records of the Bureau of Yards & Docks, 903-32-907 Crane, Indiana)

Naval Weapons Support Center Crane, Indiana. General Development Map, Key Map. Department of the Navy, Naval Facilities Engineering Command. October 1961, additions and deletions April 1974.

U.S. Naval Ammunition Depot, Crane, Indiana. Production Areas. Undated.

Appendix B: Project Source Data – General

Interview Record

Installation/Range or Site: NSWC Crane, Indiana

Date/Time: March 19, 2003

Person Conducting the Interview/Title/Organization: Denise Tegtmeyer, Malcolm Pirnie

Person Being Interviewed/Title/Organization: Linda Stoll

Reason for Selecting Person to Interview (i.e., Years at Installation, Position, Previous History, etc.): Explosive Safety Office

---

Interview Notes (i.e., Range History, Ordnance Types, Land Use, Historical Records/Maps Available):

-Dale Groh is a contractor now, bldg 122, Linda's predecessor, ext. 3601, worked here in the 1960s

MALCOLM PIRNIE

Interview Record

Installation/Range or Site: NSWC Crane, Indiana

Date/Time: March 19, 2003

Person Conducting the Interview/Title/Organization: Julie Grim, Malcolm Pirnie

Person Being Interviewed/Title/Organization: Ron Zitzman

Reason for Selecting Person to Interview (i.e., Years at Installation, Position, Previous History, etc.): EOD detachment at Crane

---

Interview Notes (i.e., Range History, Ordnance Types, Land Use, Historical Records/Maps Available):

-July, 2001 has been part of EOD

-EOD response at golf course, location at the tee

-test at OTA, 8027 reports, EOD owns none

Interview Record

Installation/Range or Site: NSWC Crane, Indiana

Date/Time: March 19, 2003

Person Conducting the Interview/Title/Organization: Julie Grim, Malcolm Pirnie

Person Being Interviewed/Title/Organization: Junior Flick

Reason for Selecting Person to Interview (i.e., Years at Installation, Position, Previous History, etc.):

Interview Notes (i.e., Range History, Ordnance Types, Land Use, Historical Records/Maps Available):

-Pyro test pads behind 198

-#2930-back of the lot, burning magnesium, if there was a heavy wind, then heavy smoke screen

-end of existing 2930 building, closer to the front area where the tower is, wasn't stone until after testing was over, then the stone was paved over

-#2930-area moved to the current pyro area in the 1960s, mainly pyro testing-brightness burning

-Jim Short-with the army, only works part time (SAIC) ext. 6796

Interview Notes Continued:

-#2044

-ABC area behind #38, puncture test on batteries, 181 lithium batteries

-#198 Test Pads, no knowledge RDT&E type work, probably classified

-Circle built NE of 198 potentially used probably late 1980s (probably fragmentation patterns?)

-No construction, tried to straighten perimeter fence

-200 +, sold to a doctor early 90s no addition construction

-Area across highway-never fences

-Crane Village, under housing officer (S.) separate utility, Dr. Alias purchased from GSA (all utilities provided by Crane)

-Nothing constructed outside boundary fences

-Burial grounds-mustard gas, dug up the containers and removed in the late 1970s/80s replaced hauled away, GW are currently there

-EOD found something in golf course, Bldg 1 experimental projectile

Interview Record

Installation/Range or Site: NSWC Crane, Indiana

Date/Time: March 20, 2003

Person Conducting the Interview/Title/Organization: Julie Grim, Malcolm Pirnie

Person Being Interviewed/Title/Organization: John Allen

Reason for Selecting Person to Interview (i.e., Years at Installation, Position, Previous History, etc.): Base Historian

---

Interview Notes (i.e., Range History, Ordnance Types, Land Use, Historical Records/Maps Available):

-1952 Public Works

-2930 Pyro Test Area, nearer to building, paved area usually w/o env. Approval, could see from street

-Old rifle range—still used

-2930- star shells, burn candles, end of WWII and Korea, reliability of fusing

-Steve has history of active pyro test areas, mentions move from 2930 (in 1960)

Interview Notes Continued:

-ABC complex back of 38; puncture test; lithium batteries; did they do anything else; environmental problems from Li

-198, circle built NE of 198, 150 ft. across, unknown use, late 80s RDT&E probably

-Boundaries: 40 acres in Davies County, no improvements, other areas to straighten fence, H 45 and H 58 sold triangle (approx. 200 acres) to Dr in early 1990s, no improvement except fence

-Crane Village, under housing office (Crane Village S.) Crane Village north, Dr. Elias bought from GSA, MOA to supply water, sewer, etc.

-Understand no testing outside boundaries

-Burial grounds for mustard, phosgene, gas, removed in 70s, repacked and sent away, SWMU, WWII items

-EOD gold course response in 2002

-14" projectile in front of building 1

-WWII, Vietnam, Korea hard to get info

-B 143 had problems and needed repairs

Interview Notes Continued:

Interview Record

Installation/Range or Site: NSWC Crane, Indiana

Date/Time: March 19, 2003

Person Conducting the Interview/Title/Organization: Julie Grim, Malcolm Pirnie

Person Being Interviewed/Title/Organization: Dr. Hank Webster

Reason for Selecting Person to Interview (i.e., Years at Installation, Position, Previous History, etc.):

Interview Notes (i.e., Range History, Ordnance Types, Land Use, Historical Records/Maps Available):

Noted Gary Norris, ext. 3452, worked in Bldg 198 for a long time as the supervisor of explosives

Burning Area-Process Control Area- currently active

Interview Record

Installation/Range or Site: NSWC Crane, Indiana

Date/Time: March 19, 2003

Person Conducting the Interview/Title/Organization: Julie Grim, Malcolm Pirnie

Person Being Interviewed/Title/Organization: Tom Brent

Reason for Selecting Person to Interview (i.e., Years at Installation, Position, Previous History, etc.):

Interview Notes (i.e., Range History, Ordnance Types, Land Use, Historical Records/Maps Available):

-Load and fill area-SWMU investigations, 143 not included nor 109

-Conservation Dam No. 2845 and SWMU 19, Pyrotechnic test area are adjacent to each other, Rocket Range, OTA, OT-Annex

-Pyro area outside test burn pad

-Test burn pads on the hill behind B-198, SWMU 0813, Load and Fill Buildings

MALCOLM PIRNIE

Interview Record

Installation/Range or Site: NSWC Crane, Indiana

Date/Time: March 19, 2003

Person Conducting the Interview/Title/Organization: Julie Grim, Malcolm Pirnie

Person Being Interviewed/Title/Organization: Dr. Bernie Douda

Reason for Selecting Person to Interview (i.e., Years at Installation, Position, Previous History, etc.): Dr. Bernie Douda

---

Interview Notes (i.e., Range History, Ordnance Types, Land Use, Historical Records/Maps Available):

Lake Greenwood Pyro Test Area Near Dam

-Off part where the club is; testing for burning time, green markers, channel into deeper water towards the dam

-At the dam, deepest spot on the lake (35 ft) –kind of hole trying to develop underwater, trying to develop underwater illuminating flare suspended from cables from boat wires ≈ 6-12 tests

-illuminating material, sodium nitrate, burning magnesium, binders CO-CO_2

-Red phosphorus flares

-All recovered hardware back on the boat (all of it was tethered)-green markers

-Occurred during the late 50s early 60s—mid 1950s testing performed finished testing in 1958

Interview Notes Continued:

Lake Oberlin-near Crane gate

-Fired out of signaling pistol (like a flare gun)

-Fluorescene dye put on water when person was overboard to test the dye device

-Fired onto the pond (to prevent fire)-you could see the slick

-Currently a boy scout site as of the late 1950s

Interview Record

Installation/Range or Site: NSWC Crane, Indiana

Date/Time: March 19, 2003

Person Conducting the Interview/Title/Organization: Julie Grim, Malcolm Pirnie

Person Being Interviewed/Title/Organization: Phil Keith

Reason for Selecting Person to Interview (i.e., Years at Installation, Position, Previous History, etc.): Point of Contact for the PA with over 19 years at NSWC Crane

---

Interview Notes (i.e., Range History, Ordnance Types, Land Use, Historical Records/Maps Available):

Mr. Keith provided current installation maps along with various other environmental information pertaining to areas within the installation. Mr. Keith provided information for various site including the following:

Test Pads on Hill Behind B-198

- Provided a file that contained information pertaining to the testing that was conducted at the Test Pads on Hill Behind B-198. The file contained a document entitled "Special Job Procedure for testing of 2.75 –Inch Warhead at Test Site Behind Building 198". The project was to test newly developed 2.75-inch colored target markers. The file also contained military specifications for the dye materials that were being tested. In addition to this testing, the file indicated that M18 Smoke Hand Grenade was also simultaneously tested at the site.
- Site was last used in approximately 1985
- Testing of plasticize composition with dye testing, but wasn't sure.
- A black powder material was loaded into a canister and tested on pad. After satellite was positioned, the canister exploded forming a black cloud to be observed.

B-2044 Drop Tower/Test Rail

- Tested 20mm cartridges at the drop tower and CADS & PADs at the test rail.
- The test rail was used for ejection seat testing

- The site was established in January 1951 and last used in Dec. 1983.
- Only used approximately 9 days/month during that time.
- Annual range firing quantity was estimated at 1090 pounds (explosive weight 51)
- Concrete, open-sided building located adjacent to the test rail was used for preparation of the tests
- Indicated that all munitions debris was picked up after use

B-2930 Process Control Area

- Used for testing experimental pyrotechnics
- The site was established in January 1963 and last used in December 1968.
- MK 24 Aircraft Parachute Flares were tested
- Testing was conducted behind the current parking lot in the open area on stone

B-143 Drop Test

- Used for testing Rockeye Bomblets
- Steve Shouse participated in the testing

Pyro Areas Outside Test Burn Pad

-

Interview Record

Installation/Range or Site: NSWC Crane, Indiana

Date/Time: March 19, 2003

Person Conducting the Interview/Title/Organization: Molly Howard, Malcolm Pirnie

Person Being Interviewed/Title/Organization: Steve Schantz

Reason for Selecting Person to Interview (i.e., Years at Installation, Position, Previous History, etc.): Range Safety Officer at NSWC Crane for numerous years.

Interview Notes (i.e., Range History, Ordnance Types, Land Use, Historical Records/Maps Available):

Mr. Schantz assisted in providing either direct information and/or identifying individuals who may have knowledge regarding the sites. The following is information obtained from Mr. Schantz:

2930-Process Control Area
- Process control for star-shell area
- Used from 1963-1968 as OED P.C. Test area
- OED was located upstairs in B-39
- MK 24 Aircraft Parachute flares, dense white smoke, smokes, flares were tested; however, no Records exist
-Point of contacts for this site were: Bob Russell, who was ordnance Dept QA, Mike Reed-Retired, Aldridge-deceased, Morris Trowbridge-Retired, Jan Armour-Retired, Dan Hoffman-Retired.
- Testing was conducted on back-side of the lot
- 50' Diameter circle for test area

Interview Notes Continued:

Pyro Areas Outside Test Burn Pad

- Flares and signals were tested
- All testing conducted at the site was inside the concrete basins; however, some kick out from the blast may have occurred.
- Testing was probably associated with the pyrotechnics (flare assembly) production occurring in Building 126.

B-143 Drop Test

- John Bromick - person identified with knowledge

B-2044 Drop Tower/Test Rail

- Danny Beaver-Retired was identified as having potential knowledge of the site

Test Pads on Hill Behind B-198

- Danny Arvin has sketches.
- Hank Webster may have knowledge
- Thought to have tested some plastics that created a smoke cloud and was observed via satellite.

COPY

IN REPLY ADDRESS
HE BUREAU OF YARDS AND DOCKS
AND REFER TO No.

NAVY DEPARTMENT

BUREAU OF YARDS AND DOCKS

WASHINGTON, D. C.

NT1-18/N1-13

July 14, 1941

From: Chief of Bureau of Yards and Docks.
To: Chief of Bureau of Ordnance.

SUBJECT: U. S. Naval Ammunition Depot, Burns City, Indiana - revision of boundary lines.

Reference: (a) Bu.Ord. ltr. NT1-19(52) (Ad3b) of June 27, 1941.

Inclosure: (A) One marked photostat of a map showing boundary of N. A. D., Burns City.

1. The boundary lines of the subject depot, as they now stand, have been indicated in red on the inclosure. Approximately 43,690 acres are inclosed within this boundary. It is estimated that approximately 925 high explosive magazines can be located in the portion of this area which lies south and east of the present State highway No. 45.

2. The inclosure has also been marked with yellow crayon to show twelve separate areas lying outside the present boundaries, the purchase of which would be necessary in order to obtain the straight boundary lines desired by the Bureau of Ordnance. These areas total about 4,325 acres. It is estimated that this land would cost an average price of $25.00 per acre, or about $108,000 for the total.

3. The Bureau of Ordnance is advised that, unless a certain amount of construction is deferred, this Bureau has available only $30,000 to apply toward the purchase of this land. Comment and recommendations are requested.

/s/ A. D. HUNTER

Filed - Washington

7779

INSTALLATION ASSESSMENT
OF
NAVAL WEAPONS SUPPORT CENTER,
CRANE, INDIANA
RECORD EVALUATION REPORT NO 117

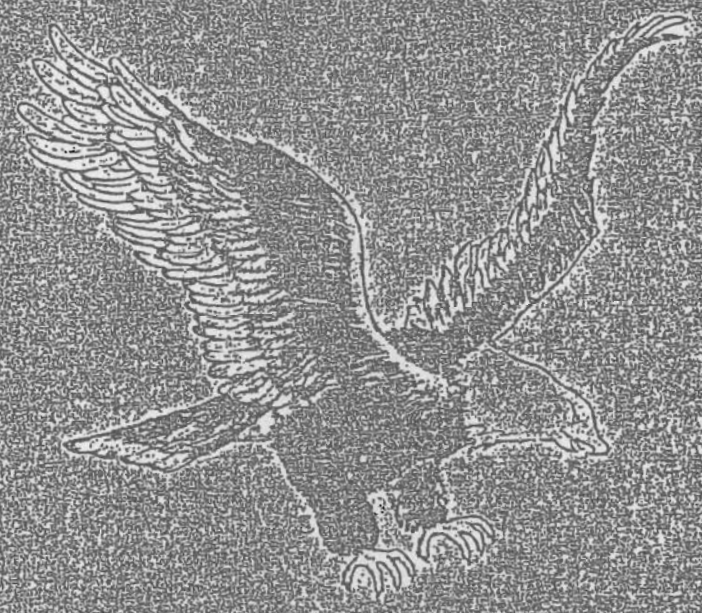

March 1978

DEPARTMENT OF THE ARMY
OFFICE OF THE PROJECT MANAGER
FOR
CHEMICAL DEMILITARIZATION AND INSTALLATION RESTORATION
ABERDEEN PROVING GROUND, MARYLAND 21010

DISTRIBUTION LIMITED TO US GOVERNMENT AGENCIES ONLY
FOR PROTECTION OF PRIVILEGED INFORMATION EVALUATING
ANOTHER COMMAND MARCH 1978 OTHER REQUESTS FOR
THIS DOCUMENT MUST BE REFERRED TO COMMANDER,
NAVAL WEAPONS SUPPORT CENTER CRANE IN 47522

STATEMENT

"The views, opinions, and/or findings contained in this report are those of the author(s) and should not be construed as an official Department of the Army position, policy, or decision, unless so designated by other documentation."

INSTALLATION ASSESSMENT

OF

CRANE ARMY AMMUNITION ACTIVITY

NWSC CRANE, INDIANA

RECORDS EVALUATION REPORT NO. 117

APPROVED:

FRANK A. JONES, JR.
Colonel, CmlC
Project Manager for
Cml Demil and
Instl Restoration

range, a rifle range, an explosive demolition area, a small arms testing area, and an ordnance burning area. Types of munitions tested include small arms, 40mm grenades, pyrotechnic flares and smoke signaling devices, mortar, bomb and projectile ammunition, and experimental devices.

2. Unexploded ordnance (UXO) were reported at several of the ranges and the demolition pits. UXO munitions include small pyrotechnic devices, aerial dispensed devices, mortar rounds, and other naval artillery shells. At the demolition area, explosive munitions are scattered as a result of demilitarization operations. During the Team's ground tour, UXO with parachutes were observed hanging from trees.

3. Lake Greenwood, which is the source of drinking and production water at NWSC, was used from the early 1940's to the late 1960's for the testing of floating pyrotechnic devices including signaling smokes and flares. Four locations were identified at Lake Greenwood where testing was conducted.

D. Disposal Operations

1. Two landfills are presently active at the installation; they are the sanitary landfill and the McComish Gorge landfill. The sanitary landfill began operations in 1971, replacing the old open burning pit as a means of disposing of daily refuse. This landfill has a leaching problem and the installation is attempting to rectify the problem by constructing a pond to hold the leachate. The McComish Gorge landfill is utilized for timbers and other large items not suitable for the main sanitary landfill. Personnel interviewed by the Team indicated that a potential exists for both landfills to be contaminated by waste materials.

2. Contaminated waste from installation activities is disposed of by burial or burning at various locations on the installation. Disposal areas include a chemical agent burial ground (1947), an ordnance burning area used since 1965, an old pyrotechnic burning pit used from the early 1940's to 1970, and a pit where approximately 50,000 pounds of smoke dyes were buried in 1969. Some of these dyes (auramine hydrochloride, yellow dye) are reported to be carcinogenic in the lastest Register of Toxic Chemical Substance published by National Institute for Occupational Safety and Health.

3. The chemical agent burial ground is located in the southeast quarter of the NWSC. Several hundred pounds of mustard agent and several pounds of radioactive thorium were buried here in 1947. One of the mustard pits was excavated in 1974 and several bombs were found to contain live mustard agent. The bombs were sealed by an Army Technical Escort Team and stored. Total number of pits is not known and a

B. Current Manufacturing Operations

A potential exists for contamination from current manufacturing operations to exit the installation via unmonitored surface and subsurface waters. Of particular concern is explosive waste (Red Water) from the Rockeye operation which is dumped into Sulphur Creek. This creek is one of several creeks in the eastern and southern areas of the installation not monitored under the installation's water quality program. In addition, NWSC is exceeding discharge limits imposed by NPDES permits.

C. Lake Greenwood

Since Lake Greenwood is not monitored by the installation for the presence of explosive or pyrotechnic waste materials, a potential exists for the lake to be contaminated by those waste materials.

D. Chemical Agent Burial Ground

An unknown quantity of mustard munitions is still buried at the Chemical Agent Burial Ground. The area is fenced, however, the exact location and number of burial pits is not known. Based on location of the burial ground, contaminant migration beyond installation boundaries is considered remote.

E. Burial of Pyrotechnic Dyes

An estimated 50,000 pounds of pyrotechnic smoke is buried at the Ordnance Burning Ground. During periods of heavy rain, colored materials seep from the filled pits. Since the dyes included carcinogenic materials, a potential exists for them to migrate via surface and subsurface waters.

F. Water Monitoring Program

The installation's present water monitoring program does not include analysis for explosive waste materials nor does it monitor all streams exiting the installation.

TABLE OF CONTENTS

	Page
I. GENERAL	I-1
A. Purpose of the Assessment	I-1
B. Authority	I-1
C. Introduction	I-1
D. Summary Description of Installation	I-3
1. Location and Size	I-3
2. Area Description	I-3
3. Organization and Mission	I-6
4. History	I-8
E. Environmental	I-9
1. Water Quality	I-9
a. Surface	I-9
b. Subsurface	I-12
c. Analysis	I-12
2. Biota	I-17
a. General	I-17
b. Flora	I-18
c. Fauna	I-20
3. Geology	I-22
a. Physiography and Topography	I-22
b. Subsurface Geology	I-22
c. Soils	I-24
II. CONTAMINATION ASSESSMENT	II-1
A. Industrial Operations	II-1
1. Rockeye/3-Inch Explosive Loading Area	II-1
2. 40-Millimeter Loading Complex	II-5
3. Booster Area	II-7
4. Mine Filling Area A	II-7
5. Mine Filling Area B	II-7
6. Loading and Filling Area	II-9
7. Pyrotechnic Area	II-12
8. Old 16-Inch Loading and Demilitarization Area	II-13
9. Building 181, Clothing Change House Area	II-13
10. Transfer Depot - Building 600	II-13
11. Laundry (Building 180)	II-13
12. Small Arms Area	II-14
B. Laboratories	II-14
1. Quality Evaluation Laboratory Complex	II-14
2. Applied Science Department Complex (ASD)	II-14
3. Naval Ammunition Production Engineering Center (NAPEC)	II-15
C. Field Test Ranges	II-15
1. Pyrotechnic Test Range	II-15
2. Range 2167/Pyro Control Test Range	II-15
3. Rocket Range	II-15

LIST OF FIGURES

Figure No.	Title	Page No.
I-1	Site Map, Naval Weapons Support Center, Crane, ID	I-4
I-2	Population and Distance of Towns near NWSC, Crane, ID	I-5
I-3	Naval Weapons Support Center Organization Chart	I-7
I-4	Water Supply	I-10
I-5	Surface Drainage	I-11
I-6	Water Wells	I-13
I-7	Discharge of Green Water from Naval Weapons Support Center	I-16
I-8	Geology	I-23
I-9	Boring Location	I-25
II-1	Rockeye Manufacturing Area	II-2
II-2	Red Water Discharge Point	II-2
II-3	Red Water 50 Yards Downstream	II-3
II-4	Red Water 200 Yards Downstream	II-3
II-5	Red Water 400 Yards Downstream	II-4
II-6	Red Water Approximately One-half Mile Downstream	II-4
II-7	General Development Map	II-6
II-8	Mine Filling Area "A"	II-8
II-9	Mine Filling Area "B"	II-10
II-10	Loading and Filling Area (High Explosive)	II-11
II-11	Pyrotechnic Test Range	II-16
II-12	Mustard Gas Burial Plot	II-19
II-13	Demolition Area	II-21
II-14	Demolition Area and Lake 330	II-22

LIST OF TABLES

Table No.	Title	
I-1	Water Treatment Plant Data for July 1977	I-12
II-1	Pesticide and Herbicide Usage	II-24

BIBLIOGRAPHY

1. Allen (Editor), Indiana Pittman-Robertson wildlife restoration, 1939-1955. Indiana Dept. Cons., Div. Fish and Game Bull. 3.240 pp.

2. Barbour, R. W. and W. H. Davis. 1969. Bats of America. Univ. Press, Lexington, Ky. 286 pp.

3. Bloom, E., and Lucas, P. E., "Redesign and Reconstruction of Lake Greenwood," Soil Conservation Service, Indianapolis, IN 1973.

4. Cainright, James E., 1959, Fossil Plants of Indiana. 45 pp + 5plates. Report of Progress # 14 (includes map). Indiana Geological Survey, Bloomington, Indiana.

5. Coulter, Stanley. A catalogue of the flowering plants and of the ferns and their allies indigenous to Indiana. Indiana Geol. Rept. 24:625-649. 1900

6. Daily, Fay Menoyer, 1971, Checklist of Indiana Algae, 1929-1971. Obtain from author, Botany Dept., Bulter Univ., Box 169, Indianapolis, IN.

7. Danos, F. J., "Sanitary/Environmental Survey," for Naval Weapons Support Center, Crane, Indiana, Naval Facilities Engineering Command, Philadelphia, PA, 1975.

8. Dawson, T. A., "Deep Test Well in Lawrence County, Indiana: Drilling Techniques and Stratigraphic Interpretations," Progress Report No. 22, Indiana Department of Conservation, Geological Survey, Bloomington, IN, 1960.

9. Deam, Chas. C. Plants new or rare in Indiana. XII. Proc. Indiana Acad. Sci. 1923:221. 1924

10. Deam, Chas. C. Flora of Indiana: on the distribution of the ferns, fern allies and flowering plants. Proc. Indiana Acad. Sci. 34: 39-53 1925.

11. Deam Chas. C. Plants new or rare in Indiana. XIII. Proc. Indiana Acad. Sci. 35:197. 1926.

12. Deam, Chas. C. 1929 Grasses of Indiana. PP. 1-356. Division of Forestry, Dept of Conservation, State of Indiana, Publication No. 82. Indianapolis.

13. Deam, Chas. C. 1932. Shrubs of Indiana. Indiana Dept. of Conservation, Indianapolis.

14. Deam Chas. C. 1940 Flora of Indiana. Pp. 1-1236. Div of Forestry, Published by the Dept. of Conservation, Indianapolis. Wm. B. Burford Printing Co. Contractor for State Printing of Binding.

15. Esarey, R. E. , Et. al., "Stratigraphy along the Mississippian-Pennsylvanian Unconformity of Western Indiana," Fourth Annual Indiana Geological Field Conference, May 12, 13, and 14, 1950, Indiana Department of Conservation, Bloomington, IN, 1950.

31. McDonald, E. S., sister. The life-forms of the flowering plants of Indiana. Amer. Midl. Nat 18: 687-773 (incl. 7 pl). 1937.

32. McPherson, Alan & Sue, 1977, Wild food plants of Indiana & adjacent states. $4.95 paper. vit 216 pp. Indiana Univ. Press, Bloomington.

33. Midlands Area Guide (The), Hoosier Forest Rlan, Hoosier Natural Forest, U.S. Forest Service, Bedford, Indiana. Pp. 1-123, 1977.

34. Minton, Sherman A., Jr. Amphibians and Reptiles of Indiana. Indiana Academy of Science Monograph No. 3, Indianapolis, IN 1972.

35. Morris, Palph L. 1943 Annotated list of the ants of Indiana. Proc. Indian Acad. Sci 52: 203-224. (1942) 1943.

36. Mumford, R. E. 1969. Distribution of the Mammals of Indiana. Monogr. No. 1 Indiana Acad. Sci. Indianapolis, IN.

37. Mumford, R. E. 1795. Checklist of Birds of Indiana. Indiana Audubon Quarterly May 1977.

38. Murdock, S. H., "A Story of Indiana Geology," Zerox, No Date.

39. Natural Features of Indiana. 1966 Edited by Alton A. Kindsey (Indiana Acad. Science) and "Natural Areas of Indiana & Their Preservation", 1969. Edited by Alton Lindsey. (American Midland Naturalist, Notre Dame, IN)

40. Natural Resources Conservation Program 1975-74-73. 80 pp. (stapled) report. Naval Weapons Support Center, Crane, IN.

41. Nelson, J. S. and S. D. Ferking. 1968. Annotated Key to the Fishes of Indiana. Dept of Zoology, Indiana University.

42. Palmer, C. M. 1929, Algae of Indiana. A classified checklist of those published between 1875-1928. Proc. Indiana Acad. Sci. 38: 109-121.

43. Parker, T. A. (Pardree University) 1969, An annotated list of the spiders of Indiana. Proc. Indiana Acad. Sci 78" 266-314. (1968) 1969.

44. Peattie, Donald Culross 1936, Flora of the Indiana Dures, Feld Museum of Natural History, Chicago.

45. Richardson, David H.S. 1974, The vanishing lichers, their history, biology, and importance. 231 pp. $12.00 Hafner Press, NY

46. Ritter, Carroll "Cave Inventory", A biology teacher & spelunker. Consists of a general inventory of Caves within Hoosier National Forest, (Contact H. E. McReynolds, U.S. D. A., Forest Service, Bedford, Indiana(47421)).

47. Rudd, R. L. 1964 Pesticides and the living landscape XIV + 320 pp. Univ. of Wisconsin Press, Madison.

48. Schneider, A. F. and Gray, H. H., "Geology of the Upper East Fork Drainage Basin, Indiana, "Special Report No. 3, Department of Natural Resources, Indiana Geological Survey, Bloomington, IN, 1966.

49. Smith, Chas. Piper. Report upon a botanical survey of the Indiana State Forest Reservation. Indiana Forestry Report. 3:111-113. 1904.

I. GENERAL

A. Purpose of the Assessment

1. To search for, identify, and assess actual or potential chemical, biological, or radiological contaminant migration at Naval Weapons Support Center (NWSC)*, Crane, Indiana from available records and by interview with present and former employees.

2. To identify any immediate on-post safety hazards associated with CBR contamination and unexploded ordnance (UXO).

B. Authority

Department of the Army (DA) charter for the Project Manager for Chemical Demilitarization and Installation Restoration (PMDCIR) dated 29 April 1977.

C. Introduction

1. Pursuant to the designation of the US Army as the DOD Single Source Manager for Conventional Ammunition, and the attendant assumption of ownership and control of certain production and storage facilities formerly under the purview of the US Navy, Headquarters, US Army Armament Materiel Readiness Command (ARRCOM) requested PMCDIR to undertake a search of NWSC records.

2. Personnel from NWSC were briefed on the program prior to the start of the on-site records search. The purpose of the briefing was to outline the assessment scope and to provide guidelines to NWSC personnel for the records search.

3. Before the actual on-site review of records began, various Government agencies were contacted for documents pertinent to the records research effort. Agencies contacted included:

a. Department of Defense Explosive Safety Board (DDESB).

b. US Army Environmental Hygiene Agency (USAEHA).

c. US Geological Survey (USGS).

d. Defense Documentation Center (DDC).

e. US Army Engineer Waterways Experiment Station (WES).

*In the past the Naval Weapons Support Center was known as the Naval Ammunition Depot, Crane, Indiana.

D. Summary Description of Installation

1. Location and Size

The NWSC Crane is located primarily in Martin County, Indiana, with a small area in the north, lying in Greene County and in the east, in Lawrence County (See Figure I-1). Daviess County borders the NWSC on the west. Located in southwestern Indiana, NWSC Crane lies approximately 25 miles southwest of Bloomington, Indiana, and 70 miles southwest of Indianapolis, Indiana. Figure I-2 shows the towns nearest to NWSC Crane, with their approximate populations. The NWSC is bounded on the north by State Road 45/58, on the west by US Route 231, and on the south by US Route 50/150.

The NWSC consists of 1,006 acres of improved grounds, 10,047 acres of semi-improved grounds, and 51,411 acres of unimproved grounds, a total of 62,404 acres. Included in the NWSC acreage is an 800-acre man-made lake, Lake Greenwood, constructed by the Civilian Conservation Corps.

There are approximately 2800 structures at NWSC, including 800 general purpose buildings and 2000 ammunition storage facilities.

2. Area Description

Martin County has an area of 337 square miles (215,680 acres); its county seat is Shoals. The county lies in the hilly part of Indiana, with an average elevation of 660 feet, and a height range of 425 to 860 feet. The local climate is characterized by warm and humid summers and moderately cold winters. Rainfall is fairly well distributed throughout the year, but there is usually an excess during the spring and an inadequate supply during summer.

Information on the counties surrounding or including NWSC Crane includes:

COUNTY	POPULATION	MAJOR CITIES AND TOWNS	RESOURCES	MAJOR MANUFACTURERS	RECREATIONAL FACILITIES
Martin	10,969	Loogootee, Shoals	Argriculture, Timber	Carnahan Mfg. Company; Edison, Inc.; U.S. Gypsum, National Gypsum	W. Boggs Creek Recreational Area; Patoka Reservoir; Martin County State Forest

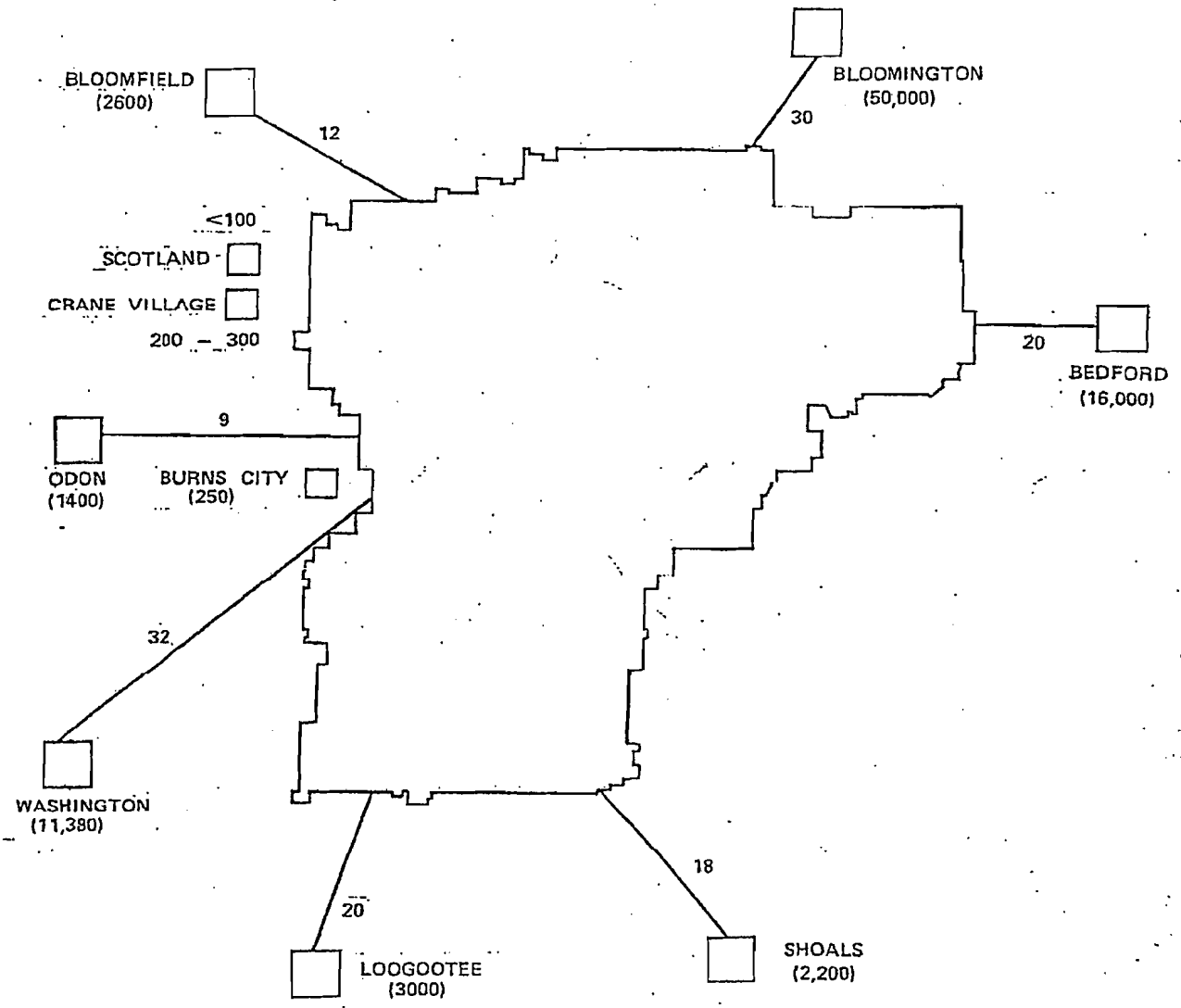

Figure I-2 POPULATION AND DISTANCE OF TOWNS NEAR NWSC, CRANE, INDIANA

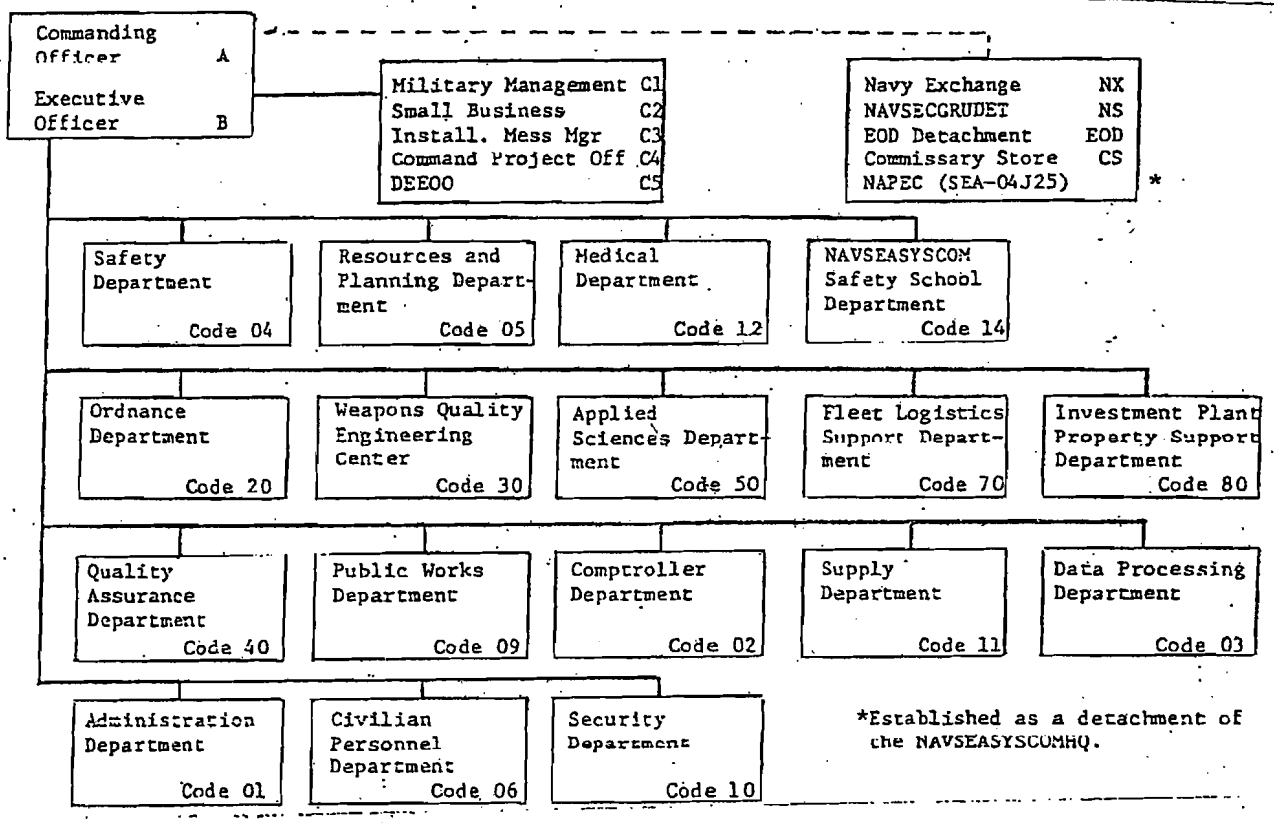

Figure I-3 NAVAL WEAPONS SUPPORT CENTER ORGANIZATIONAL CHART

E. Environmental

1. Water Quality

a. Surface. Water for the Naval Weapons Support Center (NWSC) Crane is obtained from Lake Greenwood, an 800-acre lake, situated in the northwestern portion of the NWSC (Figure I-4). Lake Greenwood is a multiple purpose reservoir that is used for recreation, flood control, and water supply. The lake has an average water depth of approximately 15 feet and is oriented in an east-west direction with a 55-foot-high compacted dam forming the western end.

Six centrifugal pumps (on the south shore of Lake Greenwood) supply raw water to the 2.1 million-gallon-a-day water treatment plant in Building 4 (Figure I-4). The water treatment consists of aeration, clarification with alum, rapid sand filtration, and chlorination. The water distribution system, consisting of 6- to 10-inch diameter lines equipped with air, electric, and hydraulic control values, is located primarily within the industrial and cantonment areas as identified by the crosshatched area in Figure I-4. Two small communities, Burns City and Crane Village, near the western boundary, purchase potable water on a fee basis from the NWSC.

The surface drainage network has formed a dendritic pattern throughout the installation. Seven creeks in four separate drainage basins carry surface water off the installation (Figure I-5). Drainage from Basin II in the northeast and southeast part of the NWSC consists of several small drainageways. The north and northwest drainage (Basin I) eventually empties into Furst Creek which flows in a westwardly direction and crosses the NWSC boundary. Rainey Hollow, Big Sulphur Creek, and Little Sulphur Creek drain the eastern sector identified as Basin III. Drainage Basin IV occupies the central portion of the installation where Boggs Creek and Turkey Creek receive the drainage from the industrial area and that portion of the cantonment area south of Roads H43 and H5. This drainage crosses the south-central boundary. Seed Tick Creek drains Basin V and exits the NWSC along the southwest boundary. All surface drainage from the NWSC empties into the East Fork of the White River south of the installation.

The NWSC maintains close coordination with the Soil Conservation Service concerning soil erosion and flood control. Ten ponds have been constructed under this program with the structures on Boggs and Seed Tick Creeks being the largest. Several small ponds and catch basins are associated with the manufacturing processes on the installation.

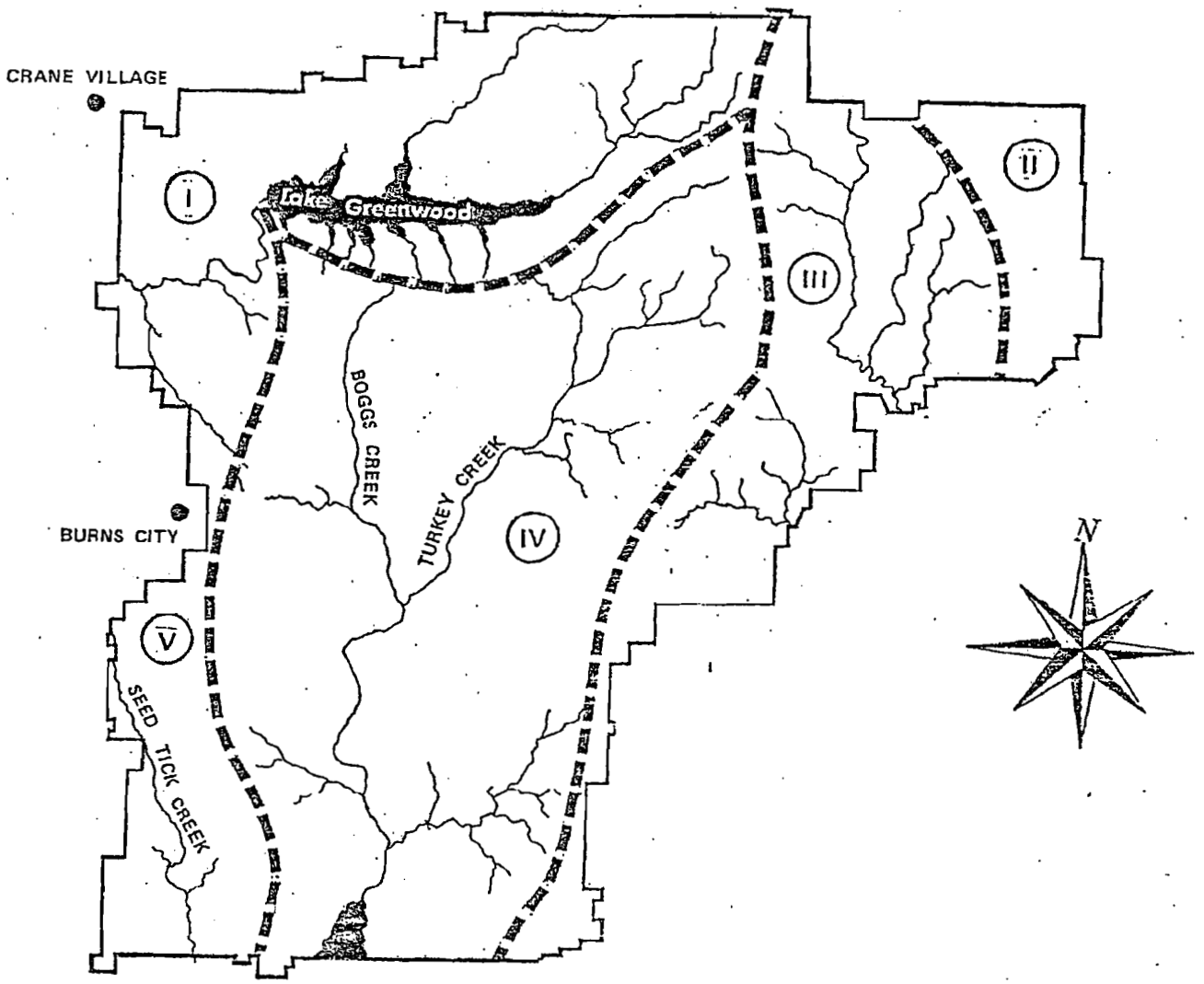

Figure I-5 SURFACE DRAINAGE

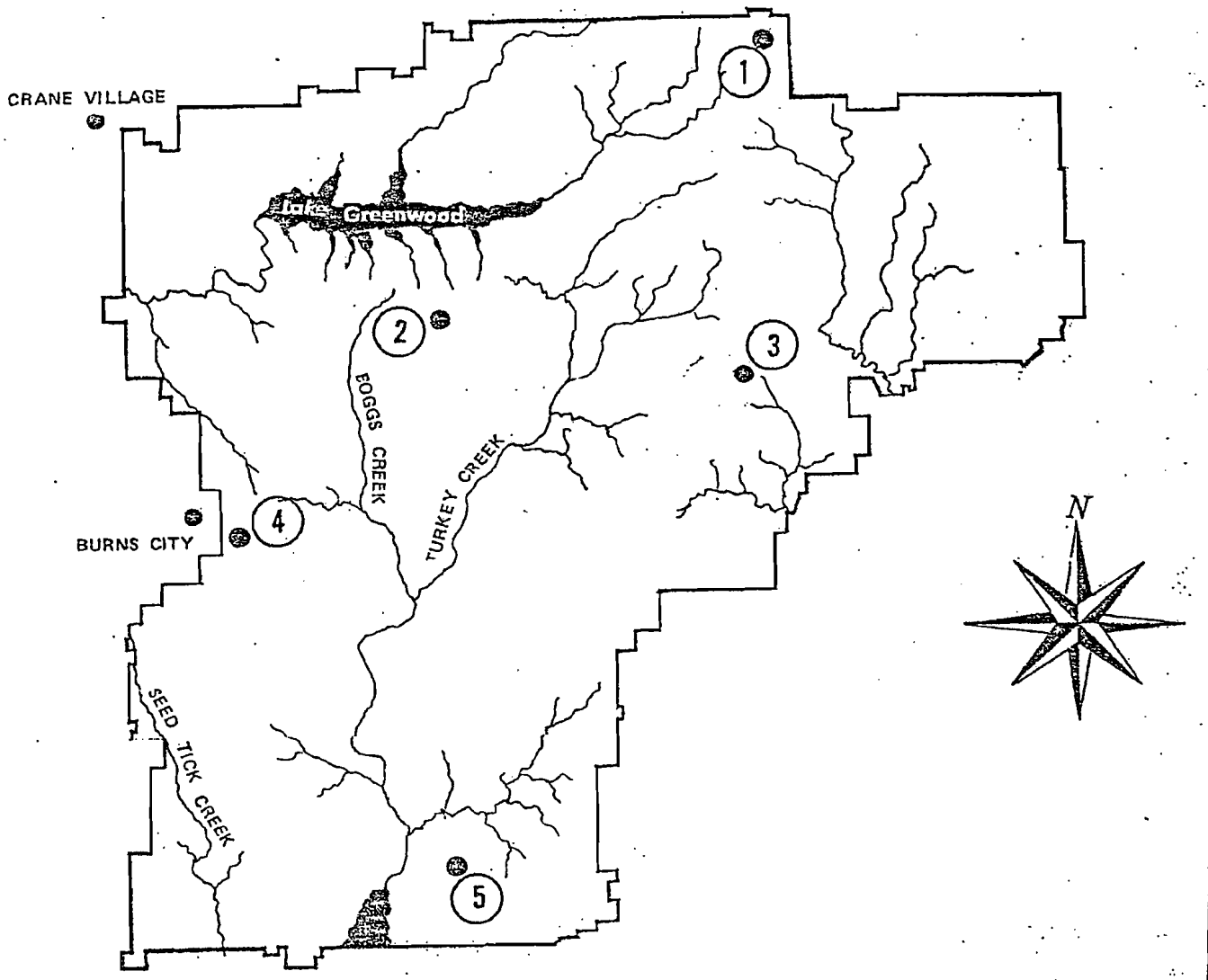

Figure I-6 WATER WELLS

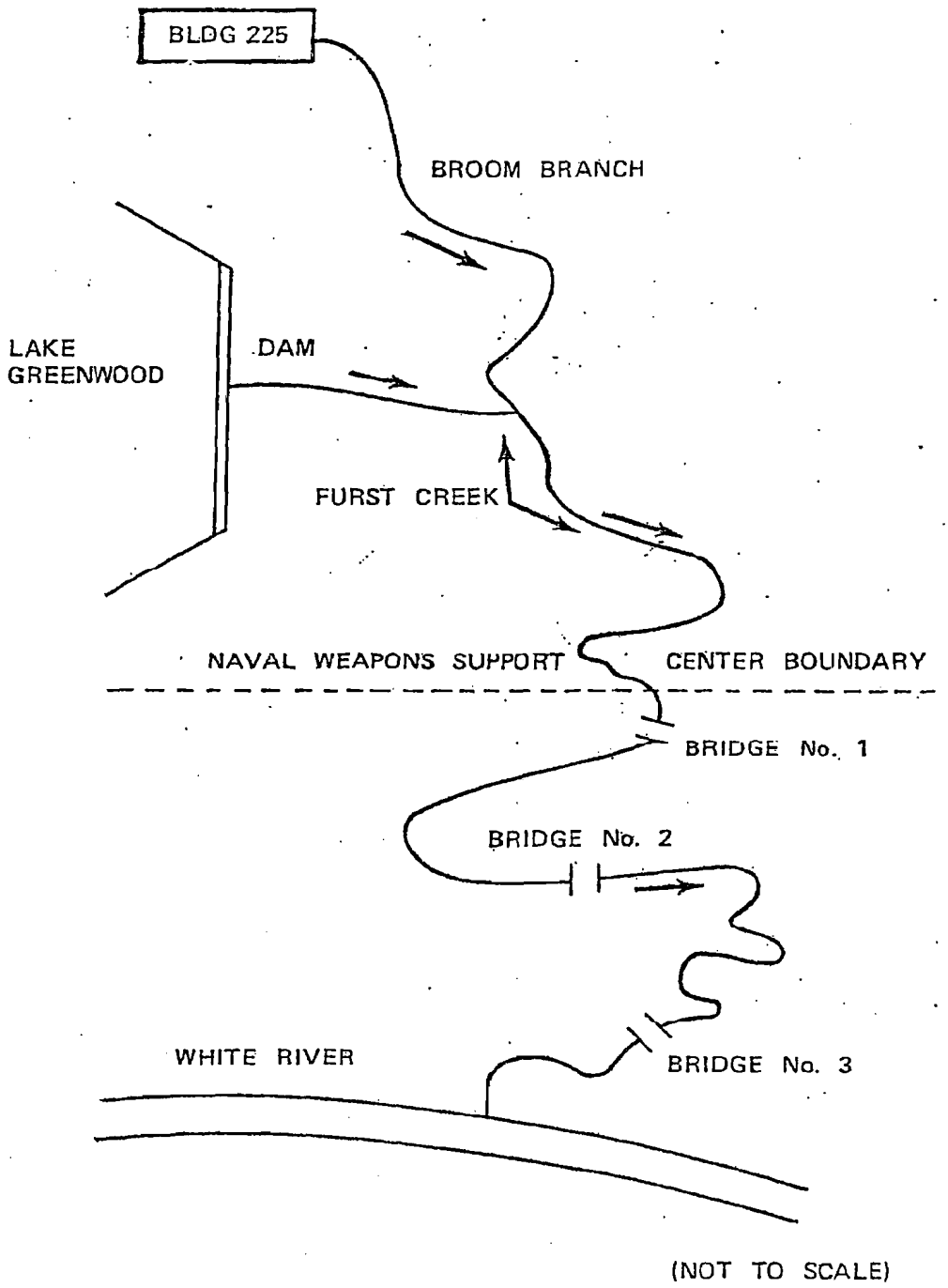

Figure I-7 DISCHARGE OF GREEN WATER FROM NAVAL WEAPONS SUPPORT CENTER

Sewage treatment plant (STP) No. 1 failed requirements for total suspended solids (TSS), fecal coliform and chlorine residual, STP No. 2 failed requirements for fecal coliform and chlorine residual, and STP's No. 3 and 4 failed requirements for chlorine residual.

Although wastewater from the Metal Plating Shop (Discharge point 005), is currently neutralized and treated to destroy cyanide before discharge to surface waters, the effluent periodically fails to comply fully with its discharge limits. There are continuing problems with pH, TSS, cyanide, copper, iron, lead, and zinc. Discharge point 005 (Boggs Creek below its confluence with Turkey Creek) had difficulties with TSS, chromium, copper, and iron.

The new advanced sewage treatment plant was put on-stream on 16 September 1977; however, since several weeks of debugging were required before it became fully operational, analyses of its output were not available during the survey.

The present water monitoring program does not include analyses of any of the NWSC major streams at the point where each leaves installation property. It is necessary to have this data in order to determine whether contaminants are actually migrating off the installation. In the eastern part of the installation, Big Sulphur Creek drains southeast from the Rockeye manufacturing area and is contaminated with explosives manufacture wastes including complexes of TNT. Further south, Little Sulphur Creek drains southeast from the vicinity of a pyrotechnic burial site and an ordnance burning area. Boggs Creek, just below its confluence with Turkey Creek, contains heavy metals; therefore, the potential exists for these contaminants to migrate off the installation at the southern boundary. Seed Tick Creek enters the installation in the southwest and drains southeast from the general area of a sanitary landfill that currently has a leachate (of unknown composition) problem. In the northwest, Furst Creek receives drainage from the vicinity of the McComish Gorge landfill and an old open burning pit via Culpepper Branch and drains west off the installation.

2. Biota

a. General. The approximately 63,000-acre NWSC Crane occupies the northern third of Martin County, Indiana, with small extensions into adjacent Greene, Daviess, and Lawrence counties. Indiana, with an area of 36,045 square miles, is one of the north central states and lies between latitude 37°40' and 41°50'N and between longitude 84°49' and 88°2'W. The northern three-fifths of Indiana was covered with the Wisconsin ice sheet and the southern two-fifths (including the the NWSC area) was slightly affected by glaciation. This unglaciated region is characterized by steep ridges separated by a dendritic drainage pattern. Initially, valleys are trench-like, but grade into flat alluvial floodplains. Summers are hot and

Timber stand improvement operations were conducted on 800 acres. Most of these operations were to remove unmerchantable, diseased, cull, or stunted trees left remaining after a timber harvest. Removal of these trees allows growing room for new trees and helps perpetuate a young healthy forest.

Insect and disease problems are minor and the main protection is furnished by the young diversified forest being produced by present silvicultural practices. Careful inspection of timber harvesting operations helps to keep logging damages to the residual stand to a minimum and reduces the common but costly insect and rot damages associated with logging. Crane natural resource personnel keep abreast of potential insect and disease problems by reviewing current reports and literature from Federal, State, and professional sources.

The diversified and extremely interesting biological resources of this area owe their origin and character in part to the variety of habitats produced by present climate, soils, and topography. The diversity of habitats is evident when one considers that with the possible exception of marsh and agricultural habitats, Crane has an excellent interspersion of all other habitat types of the region. Crane's central position on the continent has also resulted in the converging here of floral elements traceable to origins in other direction. For a listing of flora including trees and plants see Appendix B and Bibliography references 12 and 56.

The Biology Survey Committee, Indiana Academy of Sciences, has prepared a list of 485 species of rare plants in Indiana. A county breakdown of these species may be obtained from the Department of Biology, University of Notre Dame.

Although a complete list of rare plant species is not available for NWSC, the following plants in need of conservation have been recorded from the base:

Showy Orchis
Lesser Fringed Orchis
Ginseng (This species is dug for commercial sale).
Nodding Trillium
Large White Trillium
Yellow Trillium
Sessile Trillium
Twinleaf (Suspected as being present on NWSC (found nearby))
Sullivantia Sullvantii (Ohionis)
Asplenium penvatifidum
Asplenium trichomanes
Vittaria lineata "herb-wagneri"

Game birds at the installation include wild turkey, ruffed grouse, bobwhite quail, and woodcock. The wild turkey was reintroduced to the installation in 1974 and many sightings of this noble bird have since been made. Restocking efforts have also been successful with the ruffed grouse and several makes are heard each spring when they "drum" the air with rapidly beating wings in an attempt to attract a female.

Raptors that rest on the installation include the red-tailed hawk, redshouldered hawk, broad-winged hawk, sparrow hawk, Cooper's hawk, sharp-shinned hawk, great horned owl, barred owl, screech owl, and turkey vulture. From 50 to 100 turkey vultures live on the installation from late February through November. The hills and valleys provide good physical conditions for thermal updrafts in which the turkey vultures enjoy soaring in lazy circles.

Fall and winter raptorial visitors to the installation include the roughlegged hawk, marsh hawk, short-eared owl, long-eared owl, saw-whet owl, bald eagle, and golden eagle. This is probably the only place in the state where two species of eagles can be seen with any regularity. The primary foods of hawks and owls are the small animals of the woods, fields, and roadsides; and where cover is sufficient, these predators have only a minor impact on populations of game animals. These raptors are all protected by state and federal laws.

Many other species of birds can be found on the installation. The following checklist is by no means complete; however, it does give a good indication of the types of birds present:

American coot	Killdeer	Herring gull
Rock dove	Mourning dove	Belted kingfisher
Common flicker	Hairy woodpecker	Red-bellied woodpecker
Yellow-bellied sapsucker	Downy woodpecker	Horned lark
Blue jay	Common crow	Carolina chickadee
Tufted Titmouse	Brown creeper	White-breasted nuthatch
Red-breasted nuthatch	Winter wren	Carolina wren
Mockingbird	American rober	Eastern bluebird
Golden-crowned kinglet	Ceder waxwing	Starling
House sparrow	Cardinal	American goldfinch
Rufous-sided towhee	Dark-eyed junco	Tree sparrow
Field sparrow	Whip-poor-will	Purple martin
Red-winged blackbird	Swamp sparrow	White-throated sparrow
Song sparrow	Great blue heron	Ruby-throated hummingbird
Yellow-breasted chat	Common grackle	

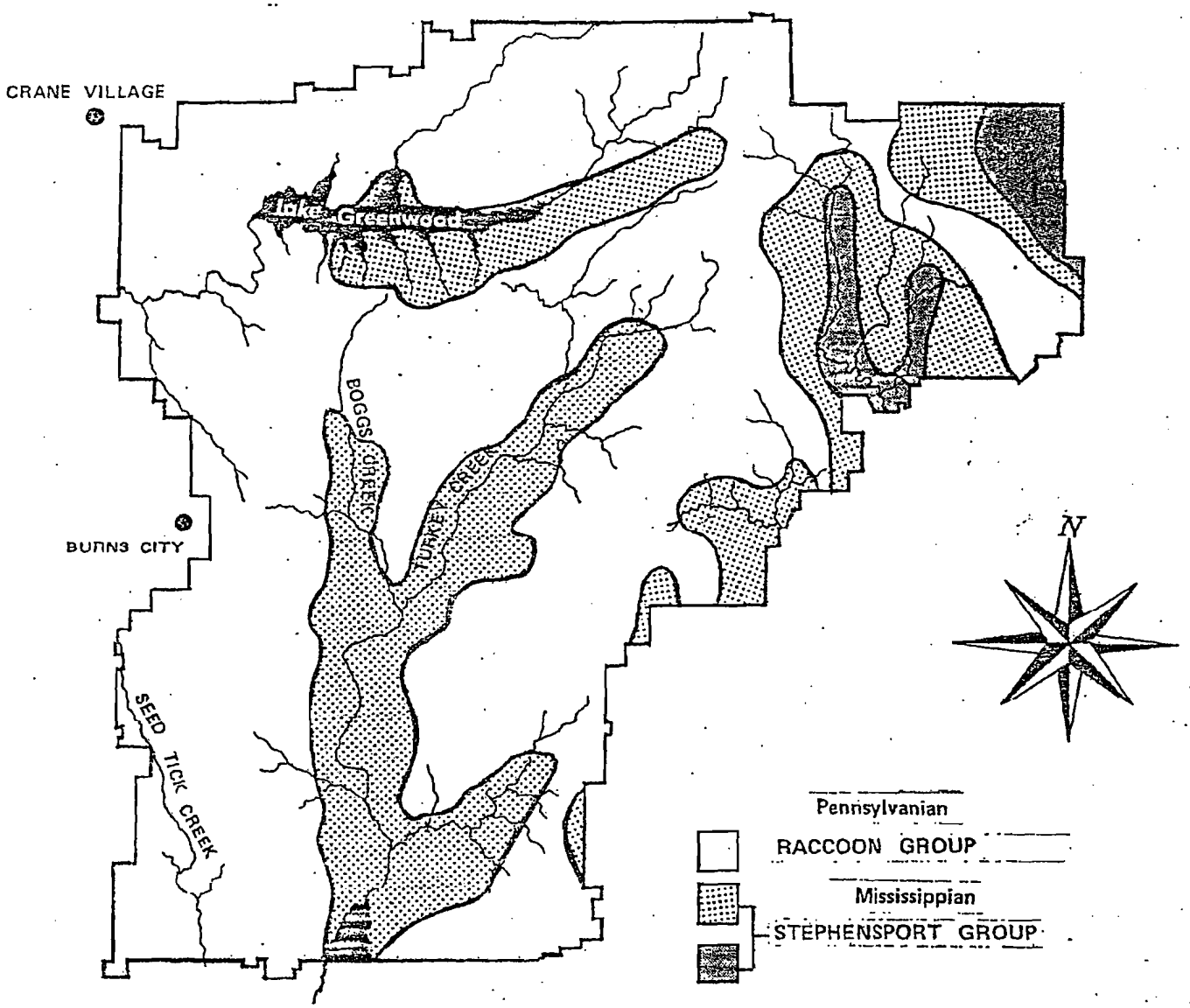

Figure I-8 GEOLOGY

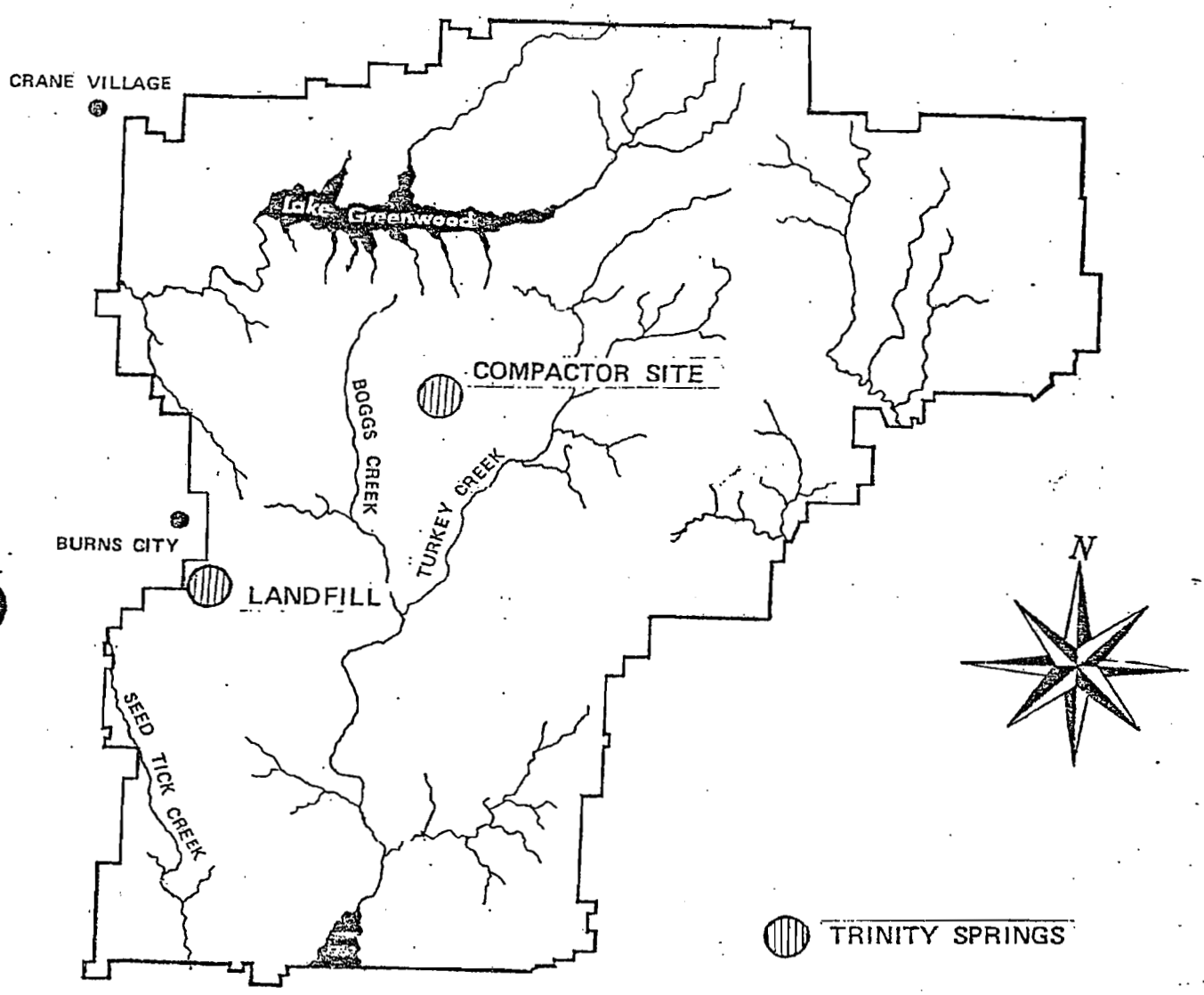

Figure I-9 BORING LOCATION

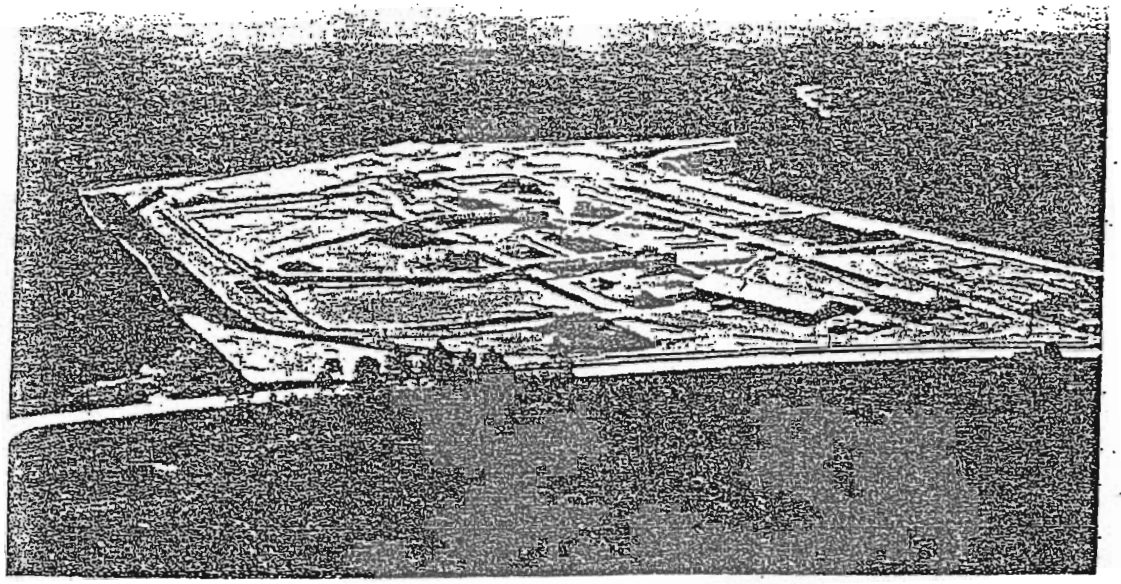

FIGURE II–1 ROCKEYE MANUFACTURING AREA, NWSC, CRANE, INDIANA (ARROW INDICATES POINT OF DISCHARGE OF RED WATER THROUGH FENCE AROUND ROCKEYE AREA)

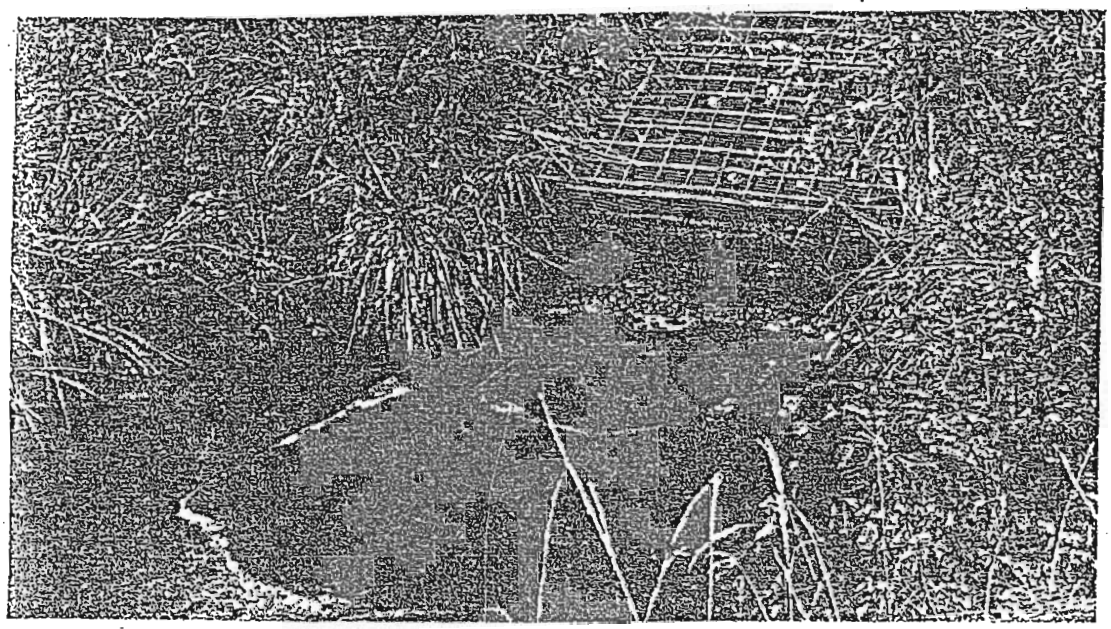

FIGURE II–2 RED WATER DISCHARGE POINT AT FENCE SURROUNDING THE ROCKEYE AREA

FIGURE II–5 RED WATER 400 YARDS DOWNSTREAM FROM ROCKEYE FENCE

FIGURE II–6 RED WATER APPROXIMATELY ONE-HALF MILE DOWNSTREAM FROM ROCKEYE FENCE

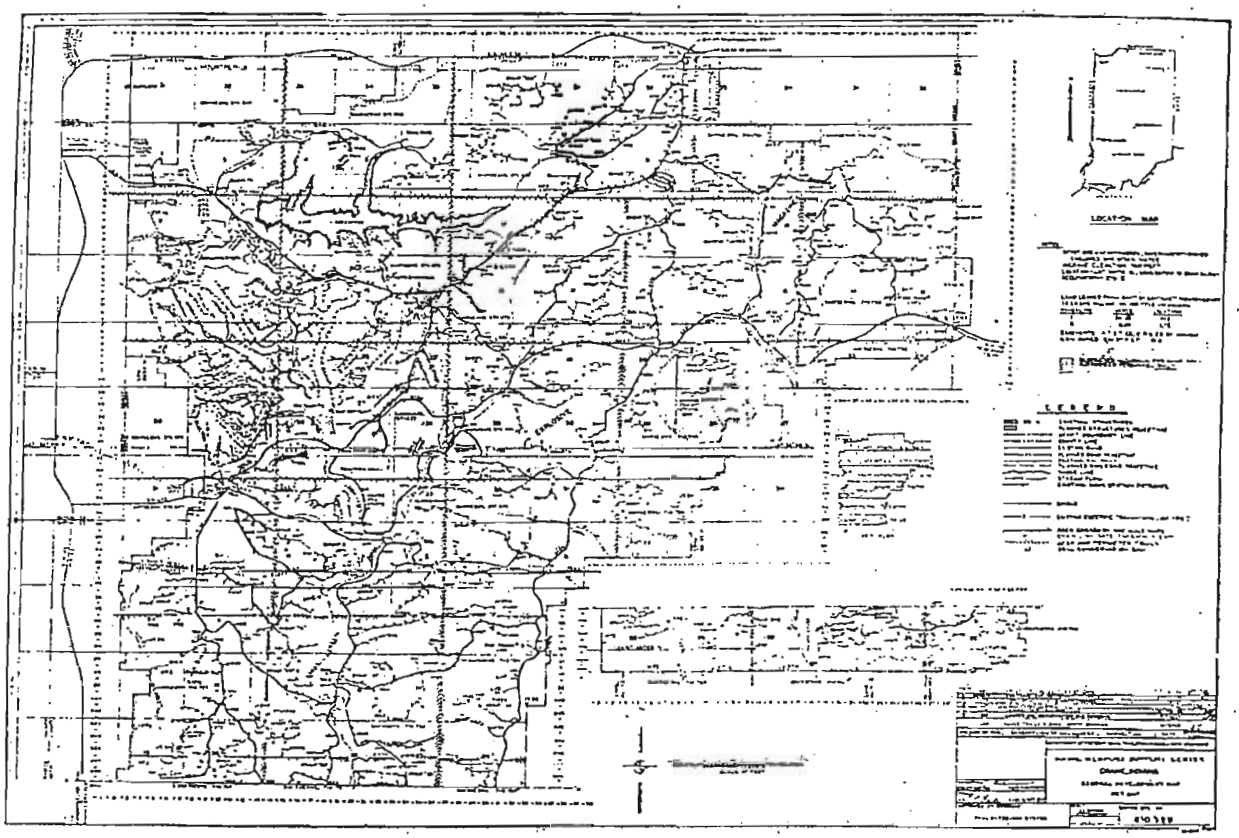

Figure II-7 GENERAL DEVELOPMENT MAP, NAVAL WEAPONS SUPPORT CENTER (KEY MAP) NAVFAC DWG No. 610328

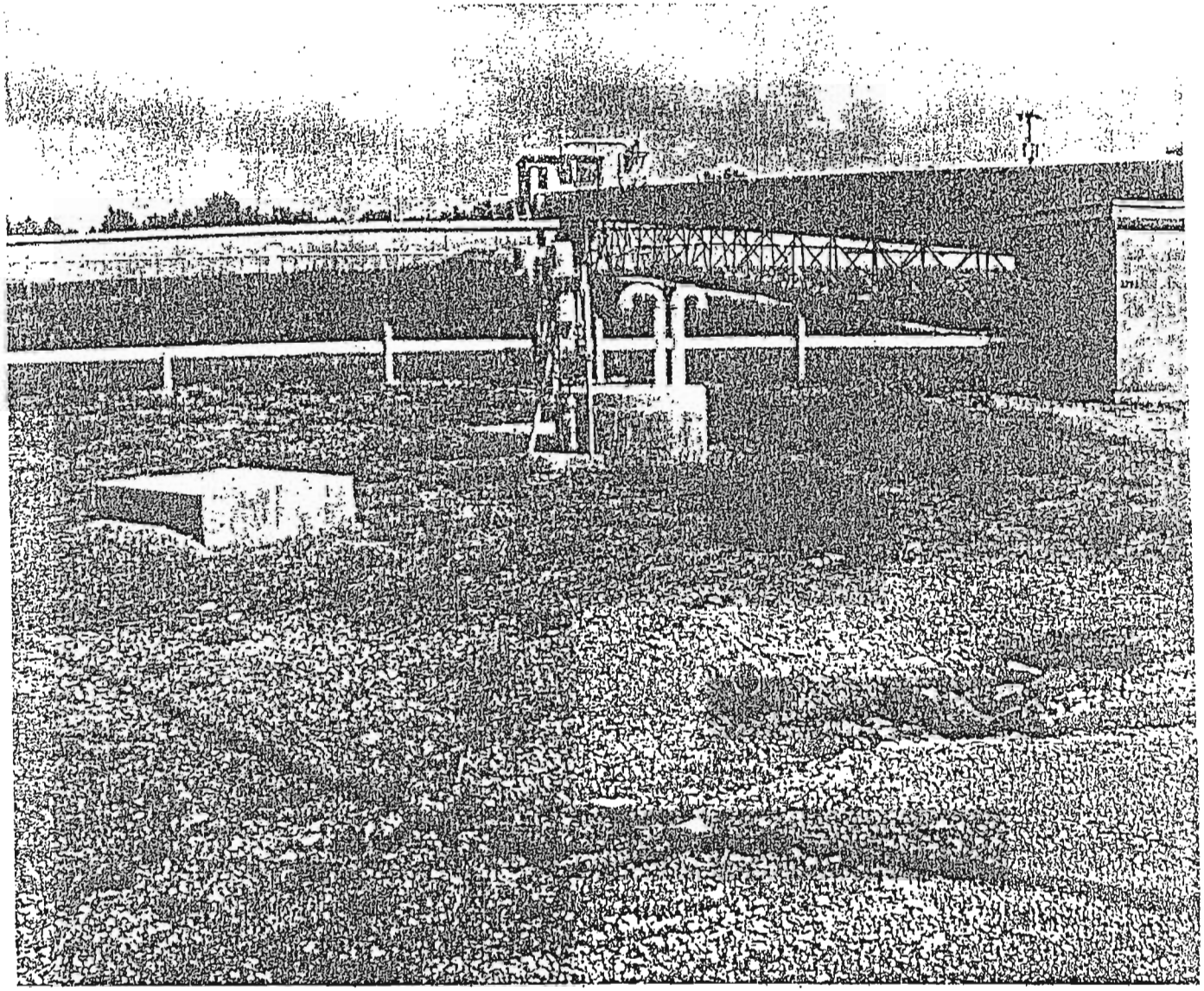

Figure II-8 MINE FILLING AREA "A"

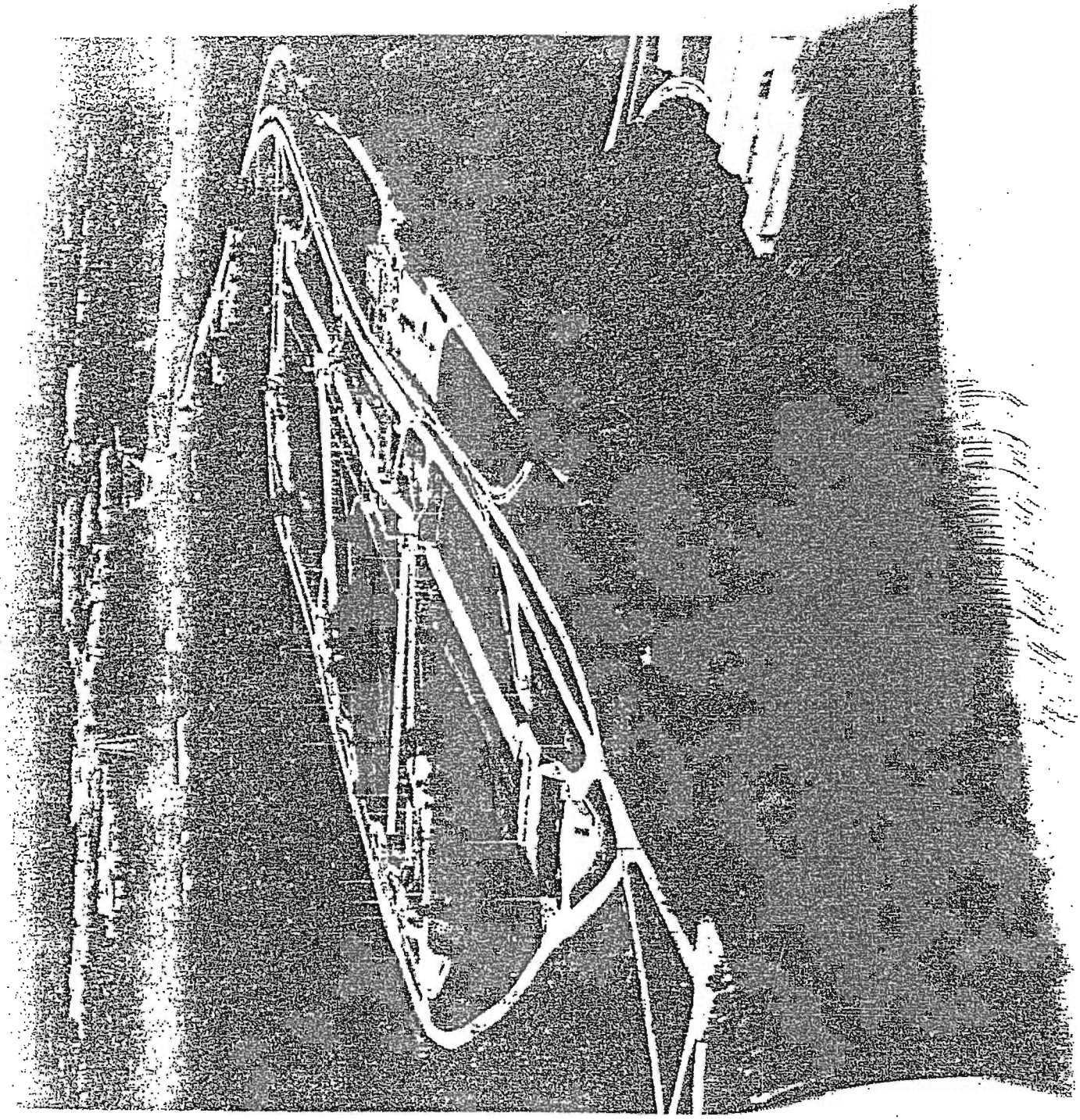

loading process while the Composition D operation is estimated to have been 75 percent loading and the remaining 25 percent demilitarization.

One other contamination spot of concern in the Loading and Filling Area is in the vicinity of old Building 225. A fire destroyed this building and its contents on 13 July 1976. This building was reportedly used for storage of large quantities of paints, solvents, dyes, inks, wood preservatives, etc. Over 600,000 gallons of water were estimated to have been pumped on to the blaze and pollutants were reportedly found in downstream samples of water. Details of this fire and subsequent activities are in the "Green Water" Report dated 20 September 1976 (See Appendix F). Building 225 has since been razed and the area reportedly cleaned; however, as a result of the large quantity of chemicals stored in the building, it would be expected that the general area in and around where Building 225 stood would continue to have residue from the building contents. The surface water in this area drains to the west and into the Furst Creek watershed. Reports have been made of small amounts of dye leaching from the nearby railroad bed during periods of heavy rains, but no toxic results could be identified.

7. Pyrotechnic Area

The Pyrotechnic Area is located at map coordinates U-24. The buildings in this area use sump pits in collecting waste and washdown water. Red phosphorus is considered the most significant contaminant in the area. Other possible contaminants identified are chlorates, dyes, oxidizers, and fuels for flares and smoke munitions. All waste and wash water reportedly drains into the respective building sump pits which are periodically pumped out into tank trucks and taken to the burning ground. All overflow of these sumps pits drains into the Boggs Creek watershed. Also within this area is a plating shop that utilizes heavy metals, caustics, acids, and cyanides. Records of past operations indicate that a cyanide neutralization treatment facility has been utilized at least, the last 12 years. However, it is expected that significant heavy metal contamination (zinc, cadmium) has been experienced from wastewater being discharged into an open ditch that drains into Boggs Creek. The acids and casutic wastes are mixed before sewering and are reported to be neutralized; however, no tests or samples are made to support this.

With the Pyrotechnic Area, there are also two old burning areas that were used many years ago. One is located behind Building 126; the other is located across Highway 5. Wastes from past activities of many years ago could still be leaching into the pits from these areas; however, neither burning area has been used for over 6 years and contamination would not be expected to be significant.

detergents, ammonia, explosives, and solid matter. Prior to 1973, the wastewater from this operation was directly discharged into an open ditch that drains into Boggs Creek. This procedure was in operation from the early WW II era to 1973; since 1973, the wastewater has washed into the sanitary sewage system. Thus, this area is not considered to be a seriously contaminated area.

12. Small Arms Area

The Small Arms Area is located at map cordinates G-18. This facility is mainly a packaging and preservation operation. It has a metal coating facility that uses caustics, phosphates, and acids; however, no significant contamination was identified in the records search.

B. Laboratories

1. Quality Evaluation Laboratory Complex

This complex is located at map coordinates R-29. Building 2044 of this complex is probably the most likely building to have caused contamination in the past. Located within this building is a laboratory (lab) complex that includes a chemistry lab, a physic lab, a microbiological lab, a metallurgy lab, an X-ray facility, a photographic lab, a model machine shop, and a testing area for explosives.

In the past, the building wastes were discharged into septic tanks and absorption fields. These areas were apparently overloaded, as seepage onto the ground surface was reported in documents reviewed by the team, (Pollution Control Program 1971). Pollutants identified were formaldehyde, Elon, hydroquinone, sodium sulfate, sodium sulfite, borax, and bleach. The drainage from this area is into Turkey Creek which drains into Boggs Creek near the center of the installation. The building wastes are presently connected to the sewer line. This action is considered to correct the on-going operation of the building; however, the past pollutants remain in the absorption field.

2. Applied Science Department Complex (ASD)

This complex is located at map coordinates GG-14. This area has been used primarily for research and development of pyrotechnics. Past operations sent chemicals directly into the stream that flows into Boggs Creek. Explosives and magnesium oxide are the heaviest pollutants in this area. In addition, it was reported that dyes, some of which are carcinogenic, and chemical waste in support of the research and development (R&D) laboratory have been discharged into the stream. Since the quantities used

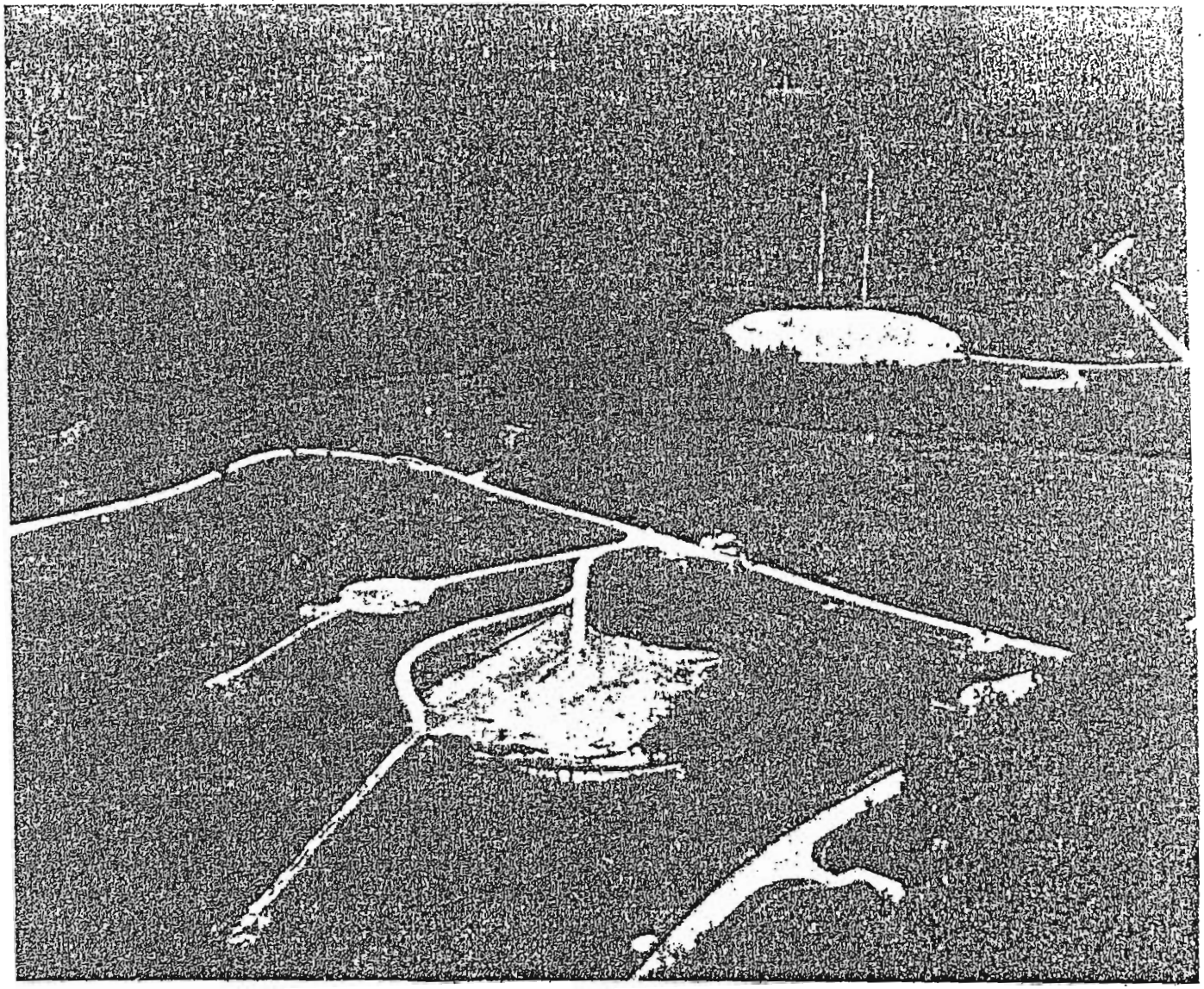

Figure II-11 PYROTECHNIC TEST RANGE

did state that the area had been utilized for bomb cook-off testing. It was reported that black powder had been destroyed in this area over the past 6 to 8 months. In addition, it was reported that a nearby area on the jeep trail was used as a demolition area prior to 1946. contaminants in these areas would be from explosive residues and their by-products. Turkey Creek flows nearby this area; however, no evidence of contamination from this area could be documented, therefore the extent of contamination cannot be determined.

D. Burial Sites of Hazardous Materials

A review of available records and interviews with present and former employees indicate that biological materials have never been buried on NWSC. The records do, however, indicate the burial of chemical, radiological, and explosive materials in the past.

1. Burial Sites of Chemical and Radiological Materials

a. Chemical Burial Ground. The location of the chemical burial ground is at map coordinates FFF-29. Details of the burial plot are in P.W. Sketch 238 dated 2-24-72 (see Figure II-12). It was reported that several hundred pounds of mustard agent and several pounds of pyrotechnic mixtures containing radioactive thorium were disposed of at this burial ground in the mid-1950's.

The radioactive thorium was excavated and removed in May 1974 and the surrounding soil has been certified free of radioactive contamination. The records indicate that the material was disposed of by the AEC at a licensed disposal point. During the excavation, one mustard site was excavated and three rounds containing mustard agent were found; one round was complete while the other two has apparently been emptied and the containers and other material thrown into the hole. The Army Technical Escort Team at Edgewood Arsenal was called in and the rounds were sealed and stored. The records indicate that at least five additional sites are located within the confines of the burial ground (Figure II-12); these sites are suspected of containing unknown amounts of mustard agent. As nearly as could be determined from the records and in interviews with present and former employees involved with the burial, the burial operations were also handled by Technical Escort personnel from Edgewood Arsenal. Rounds were taken to Building 600 where the good rounds were loaded and shipped to Ogden, Utah and the leaking containers were taken to the burial ground, emptied into holes 12 feet deep and covered with a heavy lime slurry. The containers were then thrown into the holes and covered with soil. Since one round was in complete state when found during the excavation in 1974, the possibility exists that other complete rounds could be in the remaining burial sites.

No records could be found on any water analysis in this area, either on surface or subsurface. However, because of the manner in which the agent was buried, there is a good possibility that mustard agents or their by-products could be getting into the surrounding waters via surface or subsurface.

b. Burial of Pyrotechnic Dyes. This burial site is located in the Ordnance Burning Area at map coordinates AA-47. This site was reportedly used from the 1940's until 1969 for the disposal of scrap material. This material was dumped into open trenches. During interviews with several employees, there were verbal reports of dyes overflowing from the pits during periods of rain. Some of these dyes are considered carcinogenic but no data could be found to support any contamination as a result of this operation. The pits were filled with soil in 1972; however, colored material seeps from this area at times of heavy rains. There is the possibility of contamination by these dye materials, but since no data is available, the extent of contamination cannot be determined without further tests.

2. Burial Sites of Explosive Material

a. McComish Gorge. This gorge was reportedly used for disposal of construction and odd type materials. Documentation of what was dumped into the gorge could not be found; however, during an interview, one past employee reported that "all-kinds of material including possible live rounds" were dumped into the gorge. The material identified by the past employee included tree stumps, concrete-filled practice 7.2 projectile warheads, and other material not acceptable for landfill or ordnance burning and demolition areas. Contamination from this gorge is not considered to be serious; however, due to the lack of knowledge of exactly what was dumped into the gorge, the gorge should be considered as a possible hazardous area.

b. Ordnance Demolition Area. This area is located at map coordinates GG-21. Although there is little old documentation on quantities and types of munitions detonated, this facility has been used extensively for many years and is presently active approximately 4 months out of the year. During the active period, approximately 20 shots per day are fired and the limit per detonation is 500 pounds. Unexploded ordnance (UXO) was reportedly found within the range area. Also, it was reported that sometime during the 1950's, insulation contaminated with Explosive D was buried in the demolition area. No documentation on just where it was buried could be found. In addition, FS smoke mixture was reportedly disposed of by being included with the explosives. The major contamination in this area would probably be from UXO's. Water samples from Pond 333 which is located nearby and receives the area's surface runoff has shown contamination from explosives. Figures II-13 and II-14 are views of the demolition area.

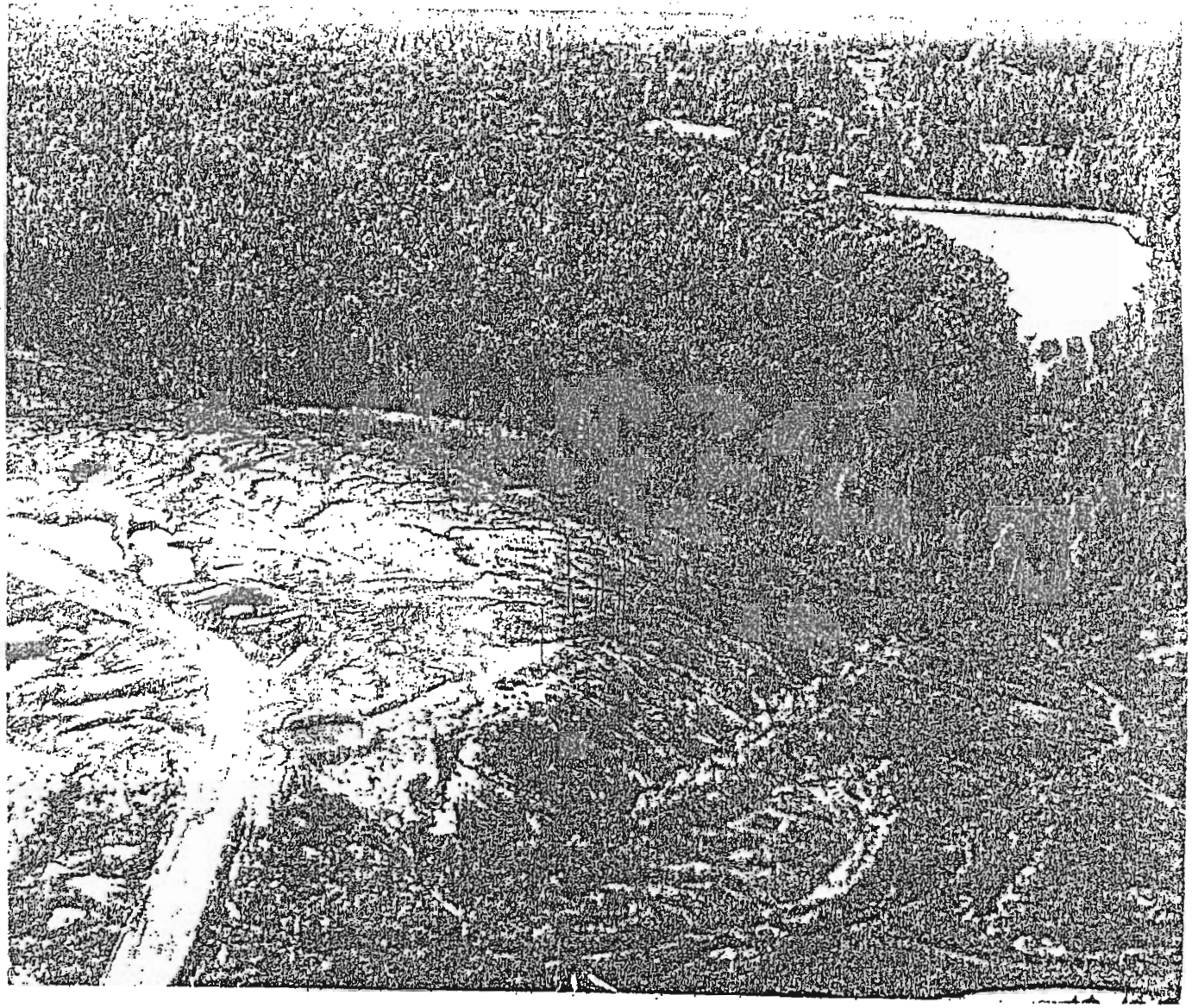

Figure II-14 DEMOLITION AREA AND LAKE 330

TABLE II-1. Pesticide and Herbicide Usage
(1 August 1976 Through 31 August 1977)

TRADE NAME	FORM	AMOUNT USED
Carbaryl	Suspension	5320 gallons
Malathion	Emulsion	2 gallons
Chlordane	Emulsion	139 gallons
Pentaur	Solution	208 gallons
Bendomyl	Suspension	247 gallons
Dyrene	Suspension	82 gallons
Methyl Bromide	Liquid	72 pounds
Promethone/2,4,5-T	Emulsion	7815 gallons
Bromacil/Dinron/2,4,5-T	Suspension	6440 gallons
MBC	Powder	2992 pounds
Bnomyls	Suspension	100 gallons
Baygon	Emulsion	60 gallons
Diazinon	Emulsion	17 gallons
Dursban	Emulsion	25 gallons
Pyrethrum	Aerosol	58 pounds
Pyrethrum	Solution	25 gallons

2. Sanitary Landfills

Prior to 1971, two landfill areas in the northwest sector were used for solid waste disposal. One was for lumber, old trees, and rubble from construction operations. The other was the depository for daily refuse which was burned. Both locations are inactive and are covered with soil.

of the plant, the ground vegetation is strongly affected and is either depauperate or missing (with patches of bare ground). The TNT spillage seems to be deep; perhaps 1 to 3 feet of the top soil is apparently heavily contaminated.

2. Waterways Indicators

Small streams in the immediate vicinity of the Bomb and Mine Filling Area A are apparently contaminated to a great degree by the explosive waste spillage. The streams and ditches show a pink color and although the larger aquatic flowering plant vegetation does not seem affected by the explosive wastes, the animal life (e.g., insects, snails, amphibians, fish) is not present, indicating very heavy pollution.

2. Unexploded ordnance (UXO) were reported at several of the ranges and the demolition pits. UXO munitions include small pyrotechnic devices, aerial dispensed devices, mortar rounds, and other naval artillery shells. At the demolition area, explosive munitions are scattered as a result of demilitarization operations. During the Team's ground tour, UXO with parachutes were observed hanging from trees.

3. Lake Greenwood, which is the source of drinking and production water at NWSC, was used from the early 1940's to the late 1960's for the testing of floating pyrotechnic devices including signaling smokes and flares. Four locations were identified at Lake Greenwood where testing was conducted.

D. Disposal Operations

1. Two landfills are presently active at the installation; they are the sanitary landfill and the McComish Gorge landfill. The sanitary landfill began operations in 1971, replacing the old open burning pit as a means of disposing of daily refuse. This landfill has a leaching problem and the installation is attempting to rectify the problem by constructing a pond to hold the leachate. The McComish Gorge landfill is utilized for timbers and other large items not suitable for the main sanitary landfill. Personnel interviewed by the Team indicated that a potential exists for both landfills to be contaminated by waste materials.

2. Contaminated waste from installation activities is disposed of by burial or burning at various locations on the installation. Disposal areas include a chemical agent burial ground (1947), an ordnance burning area used since 1965, an old pyrotechnic burning pit used from the early 1940's to 1970, and a pit where approximately 50,000 pounds of smoke dyes were buried in 1969. Some of these dyes (auramine hydrochloride, yellow dye) are reported to be carcinogenic in the lastest Register of Toxic Chemical Substance published by National Institute for Occupational Safety and Health.

3. The chemical agent burial ground is located in the southeast quarter of the NWSC. Several hundred pounds of mustard agent and several pounds of radioactive thorium were buried here in 1947. One of the mustard pits was excavated in 1974 and several bombs were found to contain live mustard agent. The bombs were sealed by an Army Technical Escort Team and stored. Total number of pits is not known and a project is being conducted by the installation to determine if migration of mustard agent is occurring. The thorium was removed from the site in 1974 and shipped to an AEC (DOE) site for storage. The site was then surveyed and certified free of radioactive contamination by the Material and Safety Department of NWSC, Crane.

Bill Cosmendo

C9231-JBA:cn
11010
7 AUG 1975

From: Commanding Officer, Naval Weapons Support Center, Crane, Indiana
To: Environmental Quality Office, ARSAA-ISE, Rock Island, Illinois
(Attn: Mr. Ted Nash)

Subj: Environmental Impact Assessments for Open Burning/Detonation of Waste Munition/Propellant

Ref: (a) COMNAVSEASYSCOM msg 042114Z of 5 Aug 1975

Encl: (1) Open-air Detonating of Excess/Obsolete Ordnance Items
(2) Open Burning of Waste Propellant, Explosive, and Pyrotechnic Materials
(3) Air Pollution Control Measures for Demil Furnace Operations

1. Enclosures (1), (2), and (3) are forwarded in accordance with reference (a).

N. L. CERVENKA
By direction

Copy to:
COMNAVSEASYSCOM (SEA-9T12E)

skiing. In addition, numerous small ponds and two flood water control dams have been built. Plants, insects, reptiles, and wildlife of all types typical of Southern Indiana are numerous on station. Eagles, otter, and bobcats are the only rare or endangered species currently on station, and none are threatened by this action.

b. Natural resources: There are no known oil or mineral deposits within the vicinity of the action; nor are there any archeological or historic sites.

c. Pollution aspects: Disposal of these materials by open-air detonation results in scattering scrap metals within the confines of the controlled area, a problem which is easily solved by collection, salvage, and further disposal.

(1) The detonation also results in several types of both gaseous and particulate emissions into the atmosphere. Elements released consist mainly of nitrogen (N), oxygen (O), carbon (C), and hydrogen (H). Some materials may have other toxic or damaging elements, such as lead (Pb), mercury (Hg), magnesium (Mg), sulfur (S), aluminum (Al), phosphorous (P), potassium (K), and silver (Ag). Quantities of these latter elements range from small to non-existent, depending on type of item or material being detonated.

(2) The operation also results in considerable noise pollution, generated by the seismic and sonic energy released by the detonation.

d. Regulatory aspects: While it is recognized that these air emissions from open detonation are undesirable, they are currently exempt from sta air emission standards. Indiana Air Pollution Code APC 2 advises that disposal of explosives by burning in remote locations is not in violation

OECO INFO CENTER

DEPARTMENT OF THE NAVY
NAVAL WEAPONS SUPPORT CENTER
CRANE, INDIANA 47522-5000

IN REPLY REFER TO:
5090/H10.0
0924

ACTIVITY FILES

8 OCT 1987

Mr. Tim Miller
Indiana Department of Environmental Management
Solid and Hazardous Waste Management
105 S. Meridian St.
Indianapolis, IN 46225-6015

Dear Mr. Miller,

Enclosed for your review is the Interim Draft Report for the Geology and Hydrology Study being done at the Ammunition Burning Grounds. This report presents findings of work done prior to September 4, 1987. We are continuing with the study so the Interim report is subject to change with new findings. Any findings or data collected from work done after the aforementioned date will be presented in a Final Report which will be submitted at a later date.

NAVWPNSUPPCEN Crane point of contact is Mr. Jim Hunsicker, Code 0924, telephone 812-854-3114, zip code 47522-5009.

Sincerely,

J. D. FARIS
Manager, Engineering Division
Public Works Department
By direction of the
Commanding Officer

Encl:
(1) Interim Draft Report & Drawings of Geology & Hydrology of the Ammunition Burning Grounds

Copy to:
Northern Division, Naval Facilities Engineering Command (Code 14)
Naval Sea Systems Command (SEA-06G112E) (w/o encl)
U.S. Environmental Protection Agency, Region V (Marty Hamper)

INTERIM DRAFT REPORT
Geology and Hydrology of the Ammunition Burning Ground,
Crane Naval Weapons Support Center

I. INTRODUCTION

Background. A ground water monitoring program was established in 1981 at the Ammunition Burning Grounds (ABG) treatment site at the Naval Weapons Support Center (NWSC), Crane, Indiana. The monitoring program was initiated to keep NWSC, Crane in compliance with 40 CFR 265 Subpart F, which requires ground water monitoring by managers of hazardous waste in surface impoundments and/or waste piles. Results of the monitoring program suggested the presence of ground-water contamination at the ABG. A background well was found to be contaminated with explosive. Other wells showed evidence of contamination as determined by statistical analyses of results of indicator parameters. Subsequently, after notifying the State and Region V Environmental Protection Agency (EPA) of the findings, a Ground Water Assessment Plan was prepared (NWSC, 1986). This report presents the results of a detailed hydrogeologic and geologic study of the ABG conducted in 1986-87.

Scope. The main objective of the study was to identify and define the factors that influence and control the flow of ground water into and out of the ABG. Once the controlling factors have been identified the potential areas and routes of contaminant migration can be closely monitored and compared with ground-water conditions around the ABG.

The scope of work included the emplacing of several continuous core borings which were fitted with well screens. During the drilling program the field data were evaluated and updated continuously. Geologic cross sections were prepared and kept current with each additional boring. Field mapping, literature surveys, and interviews with personnel from the Indiana State Geological Survey were conducted in conjunction with the drilling program. The location of each new boring was selected to offer the greatest information using the previous borings as a guide. The boring locations and time of drilling were planned so that the work would not interfere with the ongoing ABG activities.

As the site investigations progressed, the accumulating hydrogeologic data indicated a need to include the area surrounding the ABG as a general part of the overall study. Springs issuing both north and south of the ABG are hydraulically connected to ground water at the ABG. Several borings have been drilled to the north and south of ABG in order to trace pertinent

WORKING DRAFT

Figure 1. Location of Crane Naval Weapons Support Center (NWSC).

WORKING DRAFT

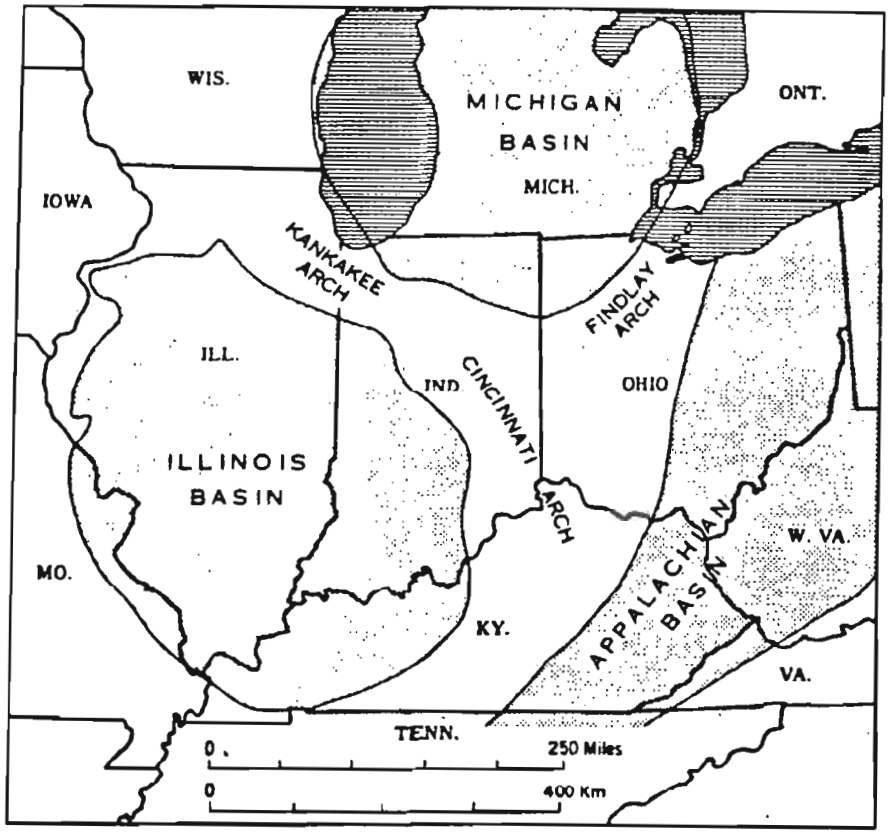

Figure 3. Major structural provinces of midwestern U.S.

WORKING DRAFT

the youngest sedimentary rocks associated with the regional geologic structural features are Pennsylvanian in age. The absence of younger strata implies that Indiana has remained above sea level for the past 280 million years or that younger strata have been subsequently removed by erosion.

The NWSC lies in the eastern edge of the Illinois Basin where the underlying sedimentary rocks dip west-southwest at approximately 50 ft per mile. The surface rocks underlying the NWSC are in the Lower Pennsylvanian and Upper Mississippian geologic time periods. A generalized stratigraphic column at the NWSC is presented in Figure 5. Mississippian rocks of the Chester series are extensively exposed in the valley walls and hollows along the eastern portions of the NWSC and in the lower zones of deeper valleys toward the west; Pennsylvanian rocks of the Pottsville series cap most of the hills and ridges along the eastern side of the NWSC and become the predominant surface rocks toward the west boundary of the NWSC. The stratigraphic units in the Pottsville series consist of interfingered sandstones, shales, claystones, and clastic siltstones, with occasional, relatively thin interbeds of coal that were deposited in multicyclic seas and swamps. The stratigraphic units in the Chester series consist of alternating and repetitive sequences of limestones, shales, and sandstones that were deposited in shallow seas. Several hundred feet of continuous limestone, Middle Mississippian in age, underlie the Chester rocks but remain in the subsurface at the NWSC. The contact between the Mississippian and the Pennsylvanian rocks is an unconformity where erosional processes extending over a long period of time removed upper portions of the Chester series prior to Pottsville deposition. Local relief along the unconformity may be as much as 150 ft in some areas.

No faults have been mapped in the NWSC general area. The closest mapped major fault, known as the Mt. Carmel fault, trends NW-SE and passes approximately 20 miles east of the NWSC.

Regional Physiography. Figure 6 presents the physiographic divisions of the state of Indiana, the limits of Pleistocene glaciation and the location of the NWSC. The NWSC lies in an unglaciated area of the Crawford Upland, a rugged dissected plateau bound on the east by the Mitchell Plain and on the west by the Wabash Lowland. The Mitchell Plain is a low dissected limestone plateau characterized by sinkhole topography and other karst features. The boundary between the Crawford Upland and the Mitchell Plain is called the Chester Escarpment, a highly irregular east-facing cuesta escarpment. The escarpment trends northwest-southeast and passes just east of the NWSC. The face of the escarpment is somewhat obscured by elongated upland spurs and upland outliers

WORKING DRAFT

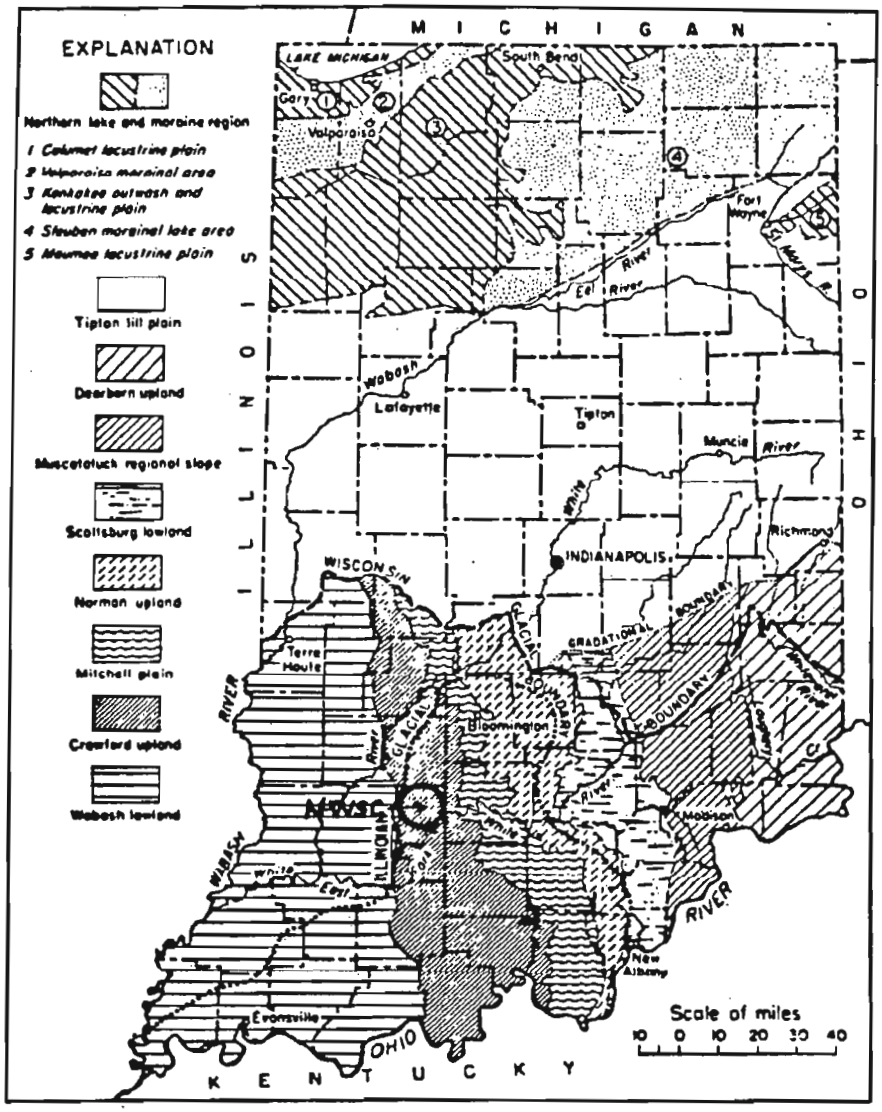

Figure 6. Physiographic divisions of the State of Indiana.

WORKING DRAFT

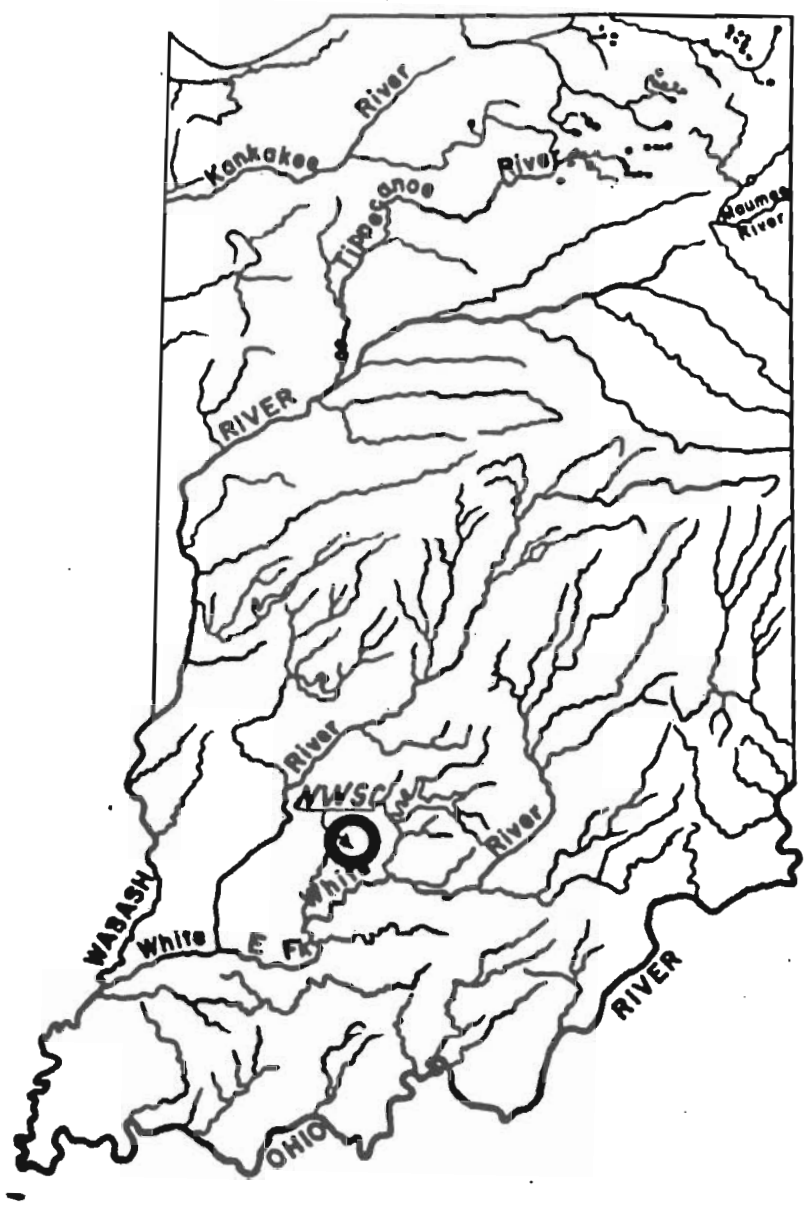

Figure 7. The stream system in Indiana.

WORKING DRAFT

III. SUMMARY OF PREVIOUS HYDROGEOLOGIC STUDIES

Past drilling programs at the ABG produced a large number of roller rock bit borings which were drilled with air. Consequently, the only samples available were as cuttings. Determining stratigraphic breaks and lithologic conditions based on drilling characteristics and cuttings at best was difficult and somewhat of an educated guess. Well screens were set in each of the borings based on the first encounter with water, but without reliable data to correlate the stratigraphically controlled ground water occurrences between borings. One of the main objectives of the earlier studies was to aid in verifying and identifying any contaminants that might have entered the ground-water system at the ABG. The objective was accomplished and certain contaminants were found to be present in the ground water at several boring locations. In fact, two of the supposed background wells, one located at the west end of the ABG, and the other at the northwest end, showed contamination. With this in mind, the line of compliance at the east end of the ABG became questionable, and the need for further investigations arose. Also, several borings located in the eastern zone of the ABG encountered large cavities the presence of which has initiated additional investigations to determine the relationship of the cavities to the ground-water flow system out of the ABG area.

IV. ABG INVESTIGATIONS

Preliminary surveys

Prior to the start of drilling operations, literature and field surveys were conducted to establish background data on the geology of the area. The results of the pre-drilling surveys showed that the analysis of the stratigraphy presented in earlier reports on the ABG was in error. The stratigraphic units identified in earlier reports were out of sequence by one formation (too high) in descending order of occurrence. In other words, the formation labeled Hardinsburg in earlier reports is actually the Big Clifty formation and the Golconda limestone is actually the Beech Creek Limestone (Figure 5).

Boring logs of two producing water wells at the ABG, one installed in 1941 and the other in 1968, were reviewed and discussed with personnel from the Indiana State Geological Survey. The aquifer supplying these wells was determined to be the Beaver Bend limestone. Drinking water at the ABG is supplied by one of these wells. The Bethel Formation underlies the Beaver Bend

WORKING DRAFT

each boring log in Appendix A. The boring "clusters" correspond to the core boring numbers, i.e., WES-3-C1-86 through WES-3-C25-86. Where more than one well screen is set at a particular "cluster," there is a detailed well screen placement sheet included at the backs of the appropriate boring logs for each of the wells set at each of the multiple well sites. The well numbers at the multiple well sites correspond to the following example: WES-3-C1-86 (core boring and deepest well screen); WES-3-C1P2-86 (roller rock bit boring and middle well screen); WES-3-C1P3-86 (roller rock bit boring and upper well screen).

The first boring, WES-3-C1-86 was initially started with a 4x5-1/2-in. diamond core barrel, but required three separate set-ups and an HQ wireline core barrel rigging to complete. In the first set-up the core barrel was hung and lost along with approximately 30 ft of drill stem at a depth of about 70 ft. A new 4x5-1/2-in. core barrel was used to continue coring to a depth of approximately 114 ft in a second set-up offset 5 ft from the first, before it was also lost. A third boring, offset an additional 5 ft, was finally completed to the required depth using an HQ wireline core barrel. The third boring is numbered WES-3-C1-86 and includes the well screen set in the lower aquifer. Since the second boring had penetrated through the middle aquifer, a well screen was set in it, but the well includes the lost core barrel at the bottom. The first boring was grouted to the surface. The remaining core borings throughout the drilling program were completed with the HQ wireline rigging.

The deep core boring, WES-3-C8-86 was found to be plugged by grout (?) in the riser pipe. A second deep boring, WES-3-C8A-86, located approximately 40 ft east of the original site, was drilled with a rock bit and a well screen was set as a replacement data point. The surface evidence of WES-3-C8-86 was destroyed and the well was grouted to the surface.

Three additional core borings with well screen emplacements are planned as part of the ABG ground-water studies. These core borings are in addition to the three splitspoon borings mentioned earlier that are to be located in Little Sulphur Creek Valley alluvium. One of the core borings will be between existing borings WES-3-C5-86 and WES-3-C6-86; one between WES-3-C7-86 and WES-3-C13-86; and one is to be located farther north of WES-3-C9-86, in line with Mt. Spring.

Drilling and Well Installation Procedures.

Drilling. Prior to the start of drilling and between set-ups at each of the boring sites thereafter, the drill rig and drilling tools were steam-cleaned

WORKING DRAFT

operations to allow the inflow of additional water. After the bailing operations, monitoring well screens and riser pipes were installed in each boring.

Monitoring well installation. A system of 2-in. diameter Teflon and PVC pipe was used to install the monitoring wells. The screens are all made from Teflon, having three vertical columns of horizontal slots .020-inch wide and spaced approximately 1/4-in. apart. The riser pipe consists of Teflon extended upward to a point approximately 5 ft above the previously measured water level in each aquifer zone. The upper portion of the riser pipe consists of PVC extending from the Teflon connection to approximately 2.5 ft above the ground surface. The bottoms of each well screen have non-slotted Teflon traps extending 1 ft below the screens. All screens in the middle and lower aquifer zones are 10 ft in length. Screens in the upper aquifer are 5 ft in length. The top of each well has a vented PVC cap. The riser pipe is protected at the surface by outside 3-in. diameter steel pipes with lockable caps and are grouted 3-1/2 ft inside the 4-in. and 6-in. diameter PVC surface casing. A typical well installation is shown graphically in Figure __(not included in this draft). A summary of all well installations is presented in Table __(not included in this draft). In the first two or three wells, which were installed prior to the establishment of the above system of well placement, the PVC pipe extends below the aquifer water level.

Once the pipe system was installed in the boring, the screened section and the total aquifer zone were packed with a siliceous coarse sand-pea gravel filter material. The filter material was poured in from the top slowly by hand and checked for depth periodically with a tape measure. The bottoms of all the screens were placed at or near the base of the particular aquifer being tested. The bottom of each boring extends 1 to 3 ft into the shale beds below the aquifer zones. The filter pack was brought up to the next higher shale zone in order to obtain a good seal above the aquifer. In the lower aquifer the filter pack averages between 15 and 20 ft thick. In the middle aquifer the filter pack averages about 60 ft thick. In the upper aquifer the filter pack averages 10 to 12 ft thick. A thickness ranging from 3 to 5 ft of bentonite pellets was poured in from the top to secure a seal above the filter pack in each well. The bentonite was allowed to set 30 minutes to 1 hour for swelling time, and the well was grouted to the surface above the bentonite. The grout consisted of a cement-bentonite mixture and was pumped in from the bottom through a 3/4-in diameter pipe.

Well development. Initially, the first 12-15 wells were developed by pumping compressed air through a filtered hose system placed at the bottom of the

WORKING DRAFT

measured at a number of outcrops. Elevations across the area range from about 480 ft MSL in the lower drainage valleys to a maximum of 845 ft MSL along the major drainage divide.

The ABG site lies across the northern reaches of the Little Sulphur Creek Valley. The site is approximately 2,000 ft long by 500 ft wide with the long axis oriented east-west. A detailed topographic map of the ABG site, with a contour interval of 1 ft, is presented in Plate 2. Elevations in the valley portion of the site range from 620 ft MSL at the western end to 580 ft MSL at the eastern end. Elevations on ridges bordering the site range from 720 to 810 ft MSL. Surface drainage flows into the site from the west and northwest, and flows out of the site to the east. At the east end of the site Little Sulphur Creek turns south and continues off the NWSC boundary, 1-1/2 miles south of the ABG site. The Little Sulphur Creek eventually joins Sulphur Creek which in turn empties into Indian Creek, approximately 5-1/2 miles south of the ABG site.

Geology.

Surface geology. The general distribution of surface rocks within the study area is shown on the geologic map presented in Plate 3. The geologic map was prepared as an overlay to the topographic map of Plate 1. Data to construct the geololgic map was obtained from "Preliminary Coal Map No. 11, Distribution, Structure, and Mined Areas of Colals in Martin County, Indiana", by Harold C. Hutchinson. The outcrop pattern on the geologic map reflects continuing headward erosion of drainage in the area, and is representative of the surface geomorphology. Younger Pennsylvaninan sediments of the Raccoon Creek Group cap the ridges, and progressively older Mississippian sediments of the Stephensport and West Baden Groups are exposed downward into the valleys. The contact between the Pennsylvanian and Mississippian sediments is an unconforminty, marked by evidence of an extended period of surface erosion prior to Raccoon Creek deposition.

The area geologic map (Plate 3) includes structural contours on top of the Beech Creek limestone. The Beech Creek is the basal formation of the Stephensport Group and is used as a datum for stratigraphic correlations throughout southwestern Indiana. The structure contours show that the regional dip of strata underlying the study area is to the southwest at approximately 50 ft per mile. Where the Beech Creek has been removed by valley down cutting, the structure contours are shown dashed. The general configuration of the Beech Creek structure contours was obtained from data available in Bulletin No. 12, Indiana Dept of Conservation, 1958, entitled "The Meramec-

WORKING DRAFT

The surface formations in the ABG valley floor area are covered by a blanket of alluvial and colluvial soils ranging from less than 1 ft to approximately 15 ft in thickness. The soils predominantly consist of yellow-brown and tan firm silty to sandy clay, with occasional to numerous weathered sandstone fragments, cobbles and pebbles. No zones considered to be permeable were encountered in the alluvial materials. Thin residual and colluvial silty clay, generally less than 5 ft thick, covers large areas of the ABG valley slopes. These soils have continually been reworked by dozers during maintenance operations at the ABG (large areas of the valley floor have also been reworked). Windows of underlying rock are exposed at scattered locations around the valley slopes.

Stratigraphy. The geologic formations encountered by borings in the study area are described in the following paragraphs, in descending order of geologic age (youngest units first).

a. **Raccoon Creek Group**

Mansfield formation. The Mansfield formation caps the hills and ridges in the study area and varies from 0 to 65 ft thick in the core borings. The formation consists of interfingered fine to medium grained, cross-bedded, friable, and oxidized sandstones; thinly bedded laminated shale and sandstone; thinly bedded to massive carbonaceous shale; massive claystone; clastic siltstone; and occasional thin seams of coal. The various beds tend to lense out rapidly in a lateral direction.

b. **Stephensport Group**

(1) Hardinsburg formation. The Hardinsburg is in contact with the Pennsylvanian-Mississippian unconformity and is missing or greatly thinned in many borings. The thickness varies from 0 to about 14 ft. The formation consists of olive to dark gray, thinly bedded, carbonaceous shale.

(2) Golconda/Haney formation. Several years ago the name for this formation was changed from the Golconda to the Haney. However, to insure easy cross reference to earlier reports both names are used in this report. The formation is in contact with the Pennsylvanian-Mississippian unconformity in several borings. The thickness varies from a few feet to about 14 ft. The formation consists of gray-brown, medium to coarsely crystalline, fossiliferous limestone in beds ranging from 2 to 14 ft thick, with interbeds or zones of dark gray shaley limestone encountered in several borings. A 1-1/2 to 2 ft thick shale bed occurs near the middle of the formation in most borings.

(3) Big Clifty formation. The Big Clifty formation is divided into

WORKING DRAFT

siliferous, very hard and dense limestone that is occasionally oolitic. The formation has numerous intersecting joints.

(5) Bethel formation. Only five wells bottomed in the upper portion of the Bethel formation. The zone penetrated consisted of black thinly bedded shale with occasional light gray sandstone lenses and light gray sandstone with shale lenses.

Analysis of geologic cross sections. The controlling geologic and hydrogeologic factors underlying the ABG site and interrelated portions of the total study area are graphically portrayed in a total of thirteen geologic cross sections (Plates 6-11 and 13-16). The cross sections were constructed primarily from boring data, but in some cases include data from outcrop examination. Ground-water profiles and the stratigraphic positions of well screens are included on the sections. Borings shown on the cross sections as having 2 or 3 well screens located in different stratigraphic horizons represent well cluster sites, where more than one ground water zone was encountered. The well screens at the cluster sites are numbered beside the boring to correspond to ground-water levels shown on the cross sections.

The exploratory drilling program has continued to provide additional boring data since the construction of the cross sections. The later borings have not been included on the sections. However, preliminary analysis implies that the new data will only complement the existing sections.

The geologic cross sections are divided into two interrelated sets or groups. The first group of cross sections represents the geologic-hydrogeologic conditions underlying the ABG site. The second group of cross sections is at a smaller scale than the first and represents the geologic-hydrogeologic conditions related to and extending beyond the ABG site, including springs. A plan of the ABG site geologic cross sections (AA' through II') is presented as Plate 5. The geologic cross sections AA' through II'are presented as Plates 6 through 11, respectively. A plan of the area geologic cross sections (JJ' through MM') is presented as Plate 12. The geologic cross sections JJ' through MM' are shown in Plates 13 through 16.

The general geologic characteristics associated with each of the cross sections are discussed in the following paragraphs. The geological development of the solution cavern passages that are shown on many of the cross sections will be discussed in detail in a separate section following the discussion of cross sections. Detailed ground-water data analysis is presented under the next major heading (Hydrogeology) and will make reference to the geologic cross sections.

WORKING DRAFT

(Discussions of sections FF' through MM' are not included in this draft but will be presented later).

Solution cavern passages. The current hydrogeological investigations being conducted in the ABG study area indicate that the following modes of formation of solution cavern passages are in effect in the study area. The caverns encountered by borings in the eastern portion of the ABG have been identified as part of a complex solution cavern passage system. The cavern passages have formed in the Beech Creek limestone in the area underlying and bordering the Little Sulphur Creek valley. The cavern system began in the lower reaches of Little Sulphur Creek and has migrated headward into the ABG as a by-product of the erosional processes that have carved out the present Little Sulphur Creek valley.

Solutioning in the Beech Creek limestone begins when the overlying Big Clifty sandstone is initially exposed to surface waters during valley incision. The Big Clifty sandstone is highly permeable and accepts nearly all of the water that comes in contact with its surface. The water seeps rapidly downward through the sandstone and into the underlying Beech Creek limestone. After entering the limestone the ground water can go no deeper because of the aquiclude formed by the underlying Elwren shale. The increasing ground water supply entering through the Big Clifty sandstone is forced to move horizontally through joints in the limestone. Cavern passages are opened along the joints and at the top of the limestone by solution resulting from the increasing ground-water flow. The ground water finds outlets through springs issuing from Beech Creek outcrops along the valley flanks farther downstream. The solutioning has continued to work its way headward to its present position in the ABG in conjunction with incision along the Little Sulphur Creek valley. Caverns that have developed on top of the Beech Creek limestone have resulted in the subsequent collapsing of overlying blocks and slabs of the Big Clifty sandstone. The solutioning processes as described above are illustrated in geologic cross section JJ' (Plate 13), which extends along the Little Sulphur Creek valley from above the ABG to the NWSC south boundary. The solution features can be seen in an outcrop in the east valley wall just south of spring "C".

Solution caverns have developed in the Beech Creek along other drainage ways both north and south of the ABG, where favorable stratigraphic conditions have evolved similar to those along Little Sulphur Creek. One of these drainage ways, of great importance in the ABG studies, lies along Johnson Hollow, located south-southwest of the ABG (Plate 1). Solution caverns in the

WORKING DRAFT

located in Sulphur Creek and other favorable drainage valleys, lying updip to the north and northeast of the ABG site. Examples of surface drainage in contact with the Beaver Bend are presented in geologic cross sections LL' and MM' (Plates 15 and 16, resp.).

It is doubtful that any significant connection exists between ground water in the middle and lower aquifers at the ABG site. Totaling the combined thickness of the Sample, Reelsville and Elwren formations, approximately 70 feet of predominantly impervious shales separate the two aquifers and provide an effective aquiclude. The non-connection between the two aquifers is emphasized by the difference in ground water surface (piezometric) elevations and the contrasting surface geometries. Another preliminary indicator of non-connection was evidenced by measurements made in the wells following a period of heavy rain. Most of the wells in the middle aquifer showed higher readings, ranging from 0.2 to 0.5 ft above previous readings. In contrast, the ground water levels in the lower aquifer remained about the same as previous measurements.

Middle ground water zone.

a. General analysis. The middle aquifer is partially open to surface water infiltration within the ABG; has hydraulic connection through solution caverns to springs south of the ABG (and possibly north, also); and is the most likely aquifer to receive and transport contaminants from the ABG disposal activities. The greater part of the study effort was applied toward defining the hydrogeologic parameters surrounding the middle aquifer. The middle aquifer includes the Beech Creek limestone and the Big Clifty sandstone, which are hydraulically connected and total 60 ft in thickness. The Elwren shale formation underlies the Beech Creek and provides an aquiclude at the aquifer base. The surface of the Elwren aquiclude under the ABG is defined by one-ft contours from boring data (Plate 17). The Elwren surface has local irregularities, but the general dip of the surface is from northeast to southwest, consistent with the regional stratigraphic dip trends. Elevations on the Elwren surface range from 539 ft, MSL, in the northeast area of the ABG, to 520 ft MSL in the southwest area.

A total of 22 monitoring wells has been set to date in the middle aquifer during the course of this study. Seventeen of the wells are within the ABG site, three wells are to the north of the site and two wells are to the south of the site. Contours on the middle aquifer at the ABG site were constructed from water levels measured in the monitoring wells on April 1, 1987 and on June 25, 1987. The resulting ground water maps are shown in

WORKING DRAFT

hold water for any great length of time. Once the water reaches the top of the sandstone, it seeps rapidly downward until it reaches the ground-water level in the middle aquifer. Ground water seeping from the upper (Golconda/Haney) aquifer into the ABG valley flows down the eroded slopes of the Indian Springs shale at the base of the alluvium and into the Big Clifty sandstone similarly to surface water conditions.

Surface water enters the Big Clifty sandstone outcrop area from two sources within the ABG. One source is from rainfall. The other source is from two creek branches that flow into the ABG from the west and the northwest and represent the headwaters of Little Sulphur Creek. The branch water is derived from ground water in sandstones and possibly from coal seams in the higher Pennsylvanian strata, and from seeps out of the Golconda/Haney limestone. The branches join near the center of the ABG and the flow continues out the east end of the site, then south down Little Sulphur Creek valley. During drier periods and in light to moderate rains, all of the surface water in the branches becomes ground water in the middle aquifer through the Big Clifty sandstone within the ABG. During wetter periods and heavier rainfall, a large part of the branch water enters the ground-water system within the ABG, and the remainder flows out the east end of the site. All of the surface water that exits the ABG eventually becomes ground water through an outcrop of Big Clifty sandstone located in the creek bed approximately 300 ft south of the ABG. The one exception is during periods of very heavy rain, when water flows freely along the creek bed for short periods of time. Normally, the Little Sulphur Creek bed remains free of water flow until a point is reached downstream where the valley downcutting has progessed to the top of the Elwren shale. The Elwren shale is reached approximately 3/4 mile south of the ABG near Spring "C" (Plate 12). Spring "C" issues a moderate volume of ground water from the base of the Beech Creek limestone, and starts a new source of surface water flowing down Little Sulphur Creek. The creek bed remains in the Elwren shale past the south boundary of the NWSC, which lies approximately 1-1/2 miles south of the ABG. Springs "A" and "B" (Plate 12) issue additional waters from the Beech Creek limestone to the surface flow before the creek crosses the NWSC boundary. A number of springs are reported to issue from the Beech Creek along the Little Sulphur Creek valley flanks south of the NWSC boundary. Groundwater is also seeping from the Beech Creek into the Valley alluvium below the surface.

The ground water that is issuing from the springs and seeps along Little Sulphur Creek is hydraulically connected through the solution cavern passage

WORKING DRAFT

Beech Creek aquifer base.

South of the ridge nose and just inside the NWSC boundary, an alignment of nine alluvial wells was installed across the valley as part of the ABG study. (The details concerning these wells have not been finalized for reporting at this time, but will be included in the final report.) The nine borings revealed an abundance of ground water contained in gravelly sands in the lower half to two-thirds of the alluvial valley fill. The alluvial fill ranges from 10 to 15 ft thick and is resting on the Elwren shale. The source of the alluvial ground water is from seeps out of the basal Beech Creek limestone below the alluvial surface. A large portion of the seepage water originates from the zone bounded by Johnson Hollow and the Little Sulphur valley. As stated earlier, there is no ground water in the valley alluvium at the ABG.

In order to illustrate the middle aquifer flow pattern beyond the ABG, a ground-water contour map was constructed as an overlay to the area topographic map (Plate 1). The map was constructed from data points at the ABG; the two borings in Johnson Hollow; one boring at the NWSC south boundary; and surveyed elevations at springs "A", "B" and "C". The ground water map has a 5-ft contour interval and is presented as Plate 20. The flow pattern shown on the map implies that all or nearly all of the ground water in the middle aquifer at the ABG eventually flows out through the Little Sulphur Creek valley, either as surface water issued from springs or as ground water in the alluvium. The above statement applies both to ground water flowing rapidly out the eastern half of the ABG, and to ground water flowing more slowly out the western half of the site.

Approximately one mile north of the ABG site, Mt. Spring (Plate 12) issues a large volume of water from the base of the Beech Creek and starts a major branch flow which empties into Sulphur Creek. There is evidence (not conclusive) that Mt. Spring may be hydraulically connected to ground water in the northwest portion of the ABG as shown on geologic cross section LL' (Plate 15). Mt. Spring appears to be flowing at an elevation that is 3 to 5 ft below the higher water levels of the middle aquifer at the ABG. The elevation at Mt. Springs was estimated from contours on the topographic map. Beech Creek springs "D", "E", and "F", lying north-northeast of the ABG, also flow into Sulphur Creek, but appear from topographic map elevations to be slightly higher then ground-water levels in the ABG. A survey is planned to determine the true elevations of each of the northerly springs.

WORKING DRAFT

INDIANA DEPARTMENT OF NATURAL RESOURCES

DIVISION OF WATER

WATER RESOURCE AVAILABILITY REPORTS FOR INDIANA

Although Indiana is a water-rich state, few reports have summarized the state's water resource on a regional basis. Perhaps the most comprehensive treatment of Indiana's water resource can be found in a series of reports published by the Indiana Department of Resources, Division of Water. In these studies, the division summarizes the amount, location, and characteristics of surface water and ground water for regional river basins **(figure 1)**. By comparing the supply potential of surface-water and ground-water systems with current and projected water use, the division can identify areas of potential water-use conflicts and areas of underutilized water supply.

Topics covered in the basin study reports include:

- Socioeconomic setting
- Geological framework
- Climatic features
- Surface-water hydrology and quality
- Ground-water hydrology and quality
- Current and projected water use
- Potential for water use conflicts

Of the twelve regional river basins shown in **(figure 1)**, five have been completed. They include the **St. Joseph(file size 831kb), Whitewater(file size 1,020kb), Kankakee(file size 1,649kb), Lake Michigan(file size 1,991kb),** and **Maumee(file size 1,918kb)** River basins. Work is presently underway on the White and West Fork White River basin. To view an executive summary of a given report, please select from the above list.

Figure 1. Indiana Water Management Basins

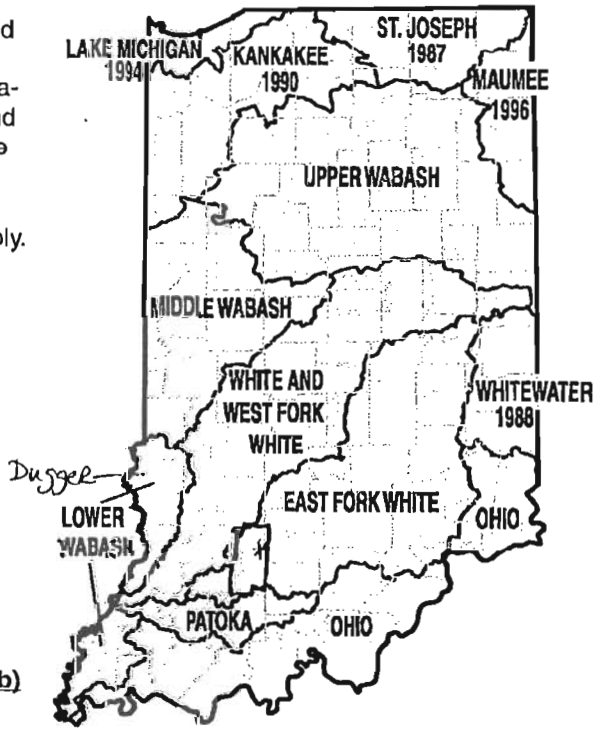

ITl-18/A1
WBS:SA

Burns City

December 21, 1940

From: Officer-in-Charge of Construction
Naval Ammunition Depot
Burns City, Indiana

To : Chief of the Bureau of Yards and Docks

Subject: Proposed Development Plan For Station

Enclosure (A) Marked Tax Map.

1. Enclosure (A) has been marked to show the proposed general layout for development of this station. This layout is, of course, very general as yet, as only a small part of the area has been surveyed. However, considerable thought has been given to the location of the personnel and industrial areas, and the general location of high explosive and other type magazines. The location of the star shell loading plant and mine filling plant will require further study.

2. Figures on the enclosed area are as follows:

	Acres	Sq. Miles
Total area proposed	30,576	47.7
Area already owned (Dept. of Agriculture)	18,210	28.5
Area under option (Dept. of Agriculture)	1,588	2.2
Area to acquire (including land optioned as well as that which has not).	12,366	19.3

3. The area shown will provide for the following types and numbers of buildings.

Projectile magazines	75
Smokeless powder magazines	65
Fixed ammunition magazines	15
Inert storage buildings	25
pyrotechnic magazines	15
High explosive magazines	413
Star shell loading plant	1 sq. mile
Mine and bomb filling plant	3400 ft. x 1000 ft.

8. The average price paid by the Department of Agriculture for the land already acquired was $8.00 per acre. Figures are not yet available on the option price which has been obtained by the same department. The area which has not yet been acquired is the best land in the area and will probably cost more to obtain than the above figure. At an estimate cost of $20.00 per acre, the total land yet to acquire would cost approximately $250,000.

9. Attention is invited to the personnel and industrial areas shown on the enclosure. It is desirable to separate such activities from the explosive area, and the location shown on the lake is a beautiful area and well suited for recreational facilities of the personnel. It is proposed to start work in this area and a tenative layout will be forwarded for approval within the next few days. In this connection it is requested that complete sets of plans be forwarded for similar buildings at Hawthorne.

10. To sum up the following is requested:

1. Approval of the area selected. It is assumed that the Bureau will require a delineation of the boundary line in order to transfer that part of the area owned by the Department of Agriculture.
2. Permission to obtain options.
3. approval of the personnel and industrial areas.
4. Plans of personnel and industrial buildings at Hawthorne.

W. B. Short.

COPY

200 Dec 5 WW 10 V8

TAA Dept
Mail Sec

ACTIVITY FILES

CULTURAL RESOURCES SURVEY

Crane Division
Naval Surface Warfare Center

Crane, Indiana

June 1992

Northern Division Naval Facilities Engineering Command

Sites for 60 shovel pits were selected using USGS topography maps, to test the revised model. In selecting locations, the two major considerations were presence of a "desirable" topographic feature and easy road access. Test locations were submitted to the Navy for review and provided to the SHPO as a professional courtesy. Several locations proved to be in unsafe areas, or areas where special escorts were required. Alternative sites were selected.

For the broadest coverage, the testing program was designed to test for presence/absence of cultural material in one pit at each shovel site. Some evidence was found that cultural resources are present and not rare at Crane. Cultural resources were found in 13 (23 percent) of 60 test pits. The high success rate was significant, especially since just one shovel pit was made at each location.

A total of 19 historic and prehistoric sites or possible sites were recorded on state survey forms. Of these, 13 were found by shovel testing; one discovered in the field at a previously unselected location; and the remainder identified by Crane personnel. The methodology of testing was simple. The field team walked to the approximate location selected, chose a reasonable place for a shovel test, and dug an irregular hole through the "C" soil horizon. The walls of the pit were inspected, then fill was broken up and sifted back into the pit by hand.

A summary of tested areas is included in Appendix B.

4.2 BUILDING SURVEY

4.2.1 Purpose of the Survey

The building survey evaluated all buildings, structures, and sites for eligibility for the National Register of Historic Places. The survey was conducted by direct observation of the developed areas, comparing the types and quality of buildings, structures, and site areas at Crane. The intention was to apply the National Register criteria, in conjunction with functional data and records of modifications made to many of the facilities. The building survey will be used as a source of information for facilities planning decisions and for the ongoing facilities management program at Crane.

The architectural survey began by identifying the existing structures that were conducted during or before 1946, based upon review of *Document P-164, Detailed Inventory of Naval Shore Facilities*, 30 September 1990. The architectural team photographed each building (or building type, if repetitive.) Using the photographs, plans, and observations, the buildings were evaluated for architectural significance and integrity. Archival research established the original uses and appearances of the buildings and aided in the determination and evaluation of the historical significance of each structure or group of structures within the context of naval history in general and within the context of the history of this installation. The National Register evaluation criteria were used to evaluate each building and district.

There are no previously identified historic resources on the site and no buildings or structures are listed in local or state inventories or the National Register of Historic Places. The following architectural and engineering resources were identified during the survey as eligible for listing on the National Register as individual resources or as contributing elements to a historic district.

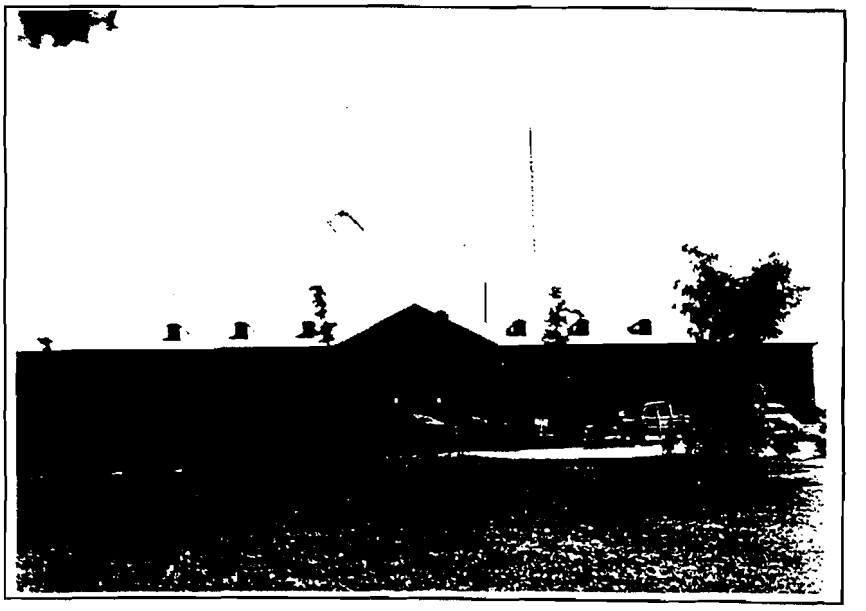

Building 13

Building 40

the buildings have stone foundations and substantial stone fireplaces and chimneys. In addition to the buildings, several stone culverts were noted along highway H-438, and are considered significant.The buildings are considered eligible under criterion A for their association with the WPA program and under criterion C for their architectural design.

Bridges

Several bridges on site are considered eligible for listing on the National Register. The bridges are Navy- and WPA-built, and include wood, concrete, and stone construction. Those bridges constructed by the Navy were designed by R.B. Moore and represent the work of the firm. Not all bridges were accessible during the on-site survey. It is therefore possible that additional, eligible bridges may exist. The bridges presently identified are significant under criterion A for their association with the development of the site and criterion C for their design and engineering.

Individual Industrial Buildings

In addition to the buildings included in district A, Buildings 34, 36, 37, 38, and 40 appear to meet National Register criteria. The buildings were part of the facility as originally planned, before its scope expanded after Pearl Harbor. The buildings are the same in design and detailing as the buildings in district A. The buildings are eligible under criterion A for their association with the development of the site by the Navy and under criterion C for their design, construction materials, and construction methodology and for technological improvements in the storage of ordnance.

Farmhouses

Two individual farmhouses have been identified as eligible. Both farmhouses were remodeled by the Navy and continue in use as housing. The farmhouses are eligible under criterion A for their association with farming in Indiana, association with the White River Land Utilization Project, and association with the development of Crane as a ammunition depot. The farmhouses may also be eligible under criterion C for use of materials and style characteristics of rural residential construction in Indiana.

Detailed descriptions of the engineering and architectural development of the Crane site appear in Appendix C. More detailed descriptions of the National Register criteria and application of those criteria to the Crane site also appear in Appendix C. Appendix D summarizes legislation and regulation relevant to construction and preservation at Crane.

NAVY ASSESSMENT AND CONTROL OF INSTALLATION POLLUTANTS:

INITIAL ASSESSMENT STUDY
of
Naval Weapons Support Center
Crane, Indiana
UIC: N00164

May 1983

Prepared by:

Wallace Eakes, Chemist, Team Leader
Jeffery Heath, Environmental Engineer
Martha Cavit, Biologist
Kip Rimm, Health Physicist
William Powers, Supvy. Environmental Engineer, NACIP Dept. Head
Chris Connelly, Environmental Engineer
John Anderson, Chemist
Marian Johnson, Technical Editor
Naval Energy and Environmental Support Activity
Code 112N
Port Hueneme, CA 93043

H. A. Dodohara, Chemical Engineer
T. J. Sullivan, Chemical Engineer
Ordnance Environmental Support Office
Indian Head, MD 20640

Jerald D. Broughton,
Research Geological Engineer
U.S. Army Engineer
Waterways Experiment Station
Vicksburg, MS 39180

Major Tree Species at NWSC Crane

Black Ash	American Elm
White Ash	Red Elm
Large-toothed Aspen	Hackberry
Baldcypress	Bitternut Hickory
Basswood	Monhernut Hickory
Beech	Pignut Hickory
River Birch	Shagbark Hickory
Boxelder	Honeylocust
Ohio Buckeye	Black Locust
Butternut	White Oak
Black Cherry	Austrian Pine
Black Maple	Jack Pine
Red Maple	Pitch Pine
Sugar Maple	Scotch Pine
Yellow Poplar	Shortleaf Pine
Black Oak	Virginia Pine
Chestnut Oak	White Pine
Chinquapin Oak	Yellow Poplar
Pin Oak	Sweetgum
Red Oak	Black Walnut
Scarlet Oak	Sycamore
Shingle Oak	Willow
Cottonwood	

Received Jul-09-2003 10:41am From-3174090030 To-MALCOLM PIRNIE WASHI Page 002

Partial List of Fauna at NWSC Crane

Reintroduced Mammals

- White-tailed deer
- Beaver

Small Mammals

- Opossum
- Mice
- Raccoon
- Cottontail rabbit
- Red fox
- Gray fox
- Long-tailed weasel
- Striped skunk
- Mink
- Coyote

Larger Rodents

- Muskrat
- Woodchuck (Groundhog)
- Gray squirrel
- Fox squirrel
- Eastern chipmunk
- Flying squirrel

Water Fowl and Shore Birds

- Canada goose
- Mallard duck
- Ringnecked duck
- Lesser scaup
- Hooded mergansers
- Black duck
- Redhead
- Common merganser
- Bufflehead
- Common loon

Game Birds

- Wild turkey
- Ruffed grouse
- Bobwhite quail
- Woodcock

Raptors that Rest on Center

- Red tailed hawk
- Red-shouldered hawk
- Broad-winged hawk
- Sparrow hawk
- Coopers hawk
- Sharp-shinned hawk
- Great horned owl
- Barred owl
- Screech owl
- Turkey vulture

Fall and Winter Raptor Visitors

- Rough legged hawk
- Marsh hawk
- Short-eared owl
- Long-eared owl
- Saw whet owl
- Bald eagle
- Golden eagle

Other Birds

- American coot
- Rock dove
- Common flicker
- Yellow-bellied sapsucker
- Blue jay
- Tufted titmouse
- Red-breasted nuthatch
- Mockingbird
- Golden-crowned kinglet
- House sparrow
- Rufous-sided towhee
- Field sparrow
- Red-winged blackbird
- Song sparrow
- Killdeer
- Mourning dove
- Hairy woodpecker
- Downy woodpecker
- Common crow
- Brown creeper

List of Pyrotechnic Items Produced

Title	Title
Signal, Illumination, Marine, Mk 2 Mod 0.....	Projectile Load, Illuminating Mk 9 Mods 0 and 1.....
Signal, Smoke, Marine, Mk 2 Mods 0.....	* Projectile Load, Illuminating Mk 11 Mod 0.....
Signal, Illumination, Aircraft, AN-M37A2 Thru AN-M42A2; AN-43A2 thru AN-M45A2 AN-M53A2 thru AN-M58A2.....	Projectile Load, Illuminating Mk 12 Mod.....
Signal, Smoke, Ground, M62, M64 and M65.....	Flare, Surface, High Altitude, Parachute Mk 20.....
Signal, Smoke and Illumination, Marine, Mk 13 Mod 0.....	Cartridge, 81MM Illuminating M301A2.....
* Signal, Smoke and Illumination, Marine, Mk 38 Mod 0.....	Flare, Surface M49
Signal, Illumination, Ground, Green, M125A1.....	Grenade, Hand Illuminating Mk 1 Mods 2 and 3.....
Signal, Smoke, Ground, M128A1 and M129A1...	* Flare, Aircraft, Parachute Mk 45 Mod 0.....
Signal, Hand Fired, Mk 80 Mods 0 and 1.....	Warhead, 5.0 Inch Rocket, Illuminating Mk 33 Mod 1
Signal, Illumination, Aircraft, Mk 6 Mod 0.....	* Marker, Location, Marine Mk 2 Mods 0 and 1.....
Signal, Smoke, Aircraft, Mk 7 Mod 0.....	Signal, Smoke and Illuminating, Aircraft Mk 5 Mods 3 and 4...
Fuse, Warning, Railroad M72	Signal, Smoke and Illumination, Aircraft Mk 6 Mod 3.....
Cartridge, Signal, Mk 130, Mk 138, Mk 139, and Mk 140 Mods 0.....	Marker, Location, Marine Mk 7 Mods 2 and 3.....
Cartridge, Signal, Mk 121, Mk 122, and Mk 123 Mods.	Marker, Location, Marine Mk 9 Mod 0.....
Flare, Aircraft, Parachute, Mk 5 Mods.....	* Marker, Location, Marine Mk 25 Mods 0, 1, 2 and 3
Flare, Aircraft, Parachute, Mk 6 Mods 3 thru 6.....	* Marker, Location, Marine Mk 58 Mod 0.....
Projectile Load, Illuminating, Mk 7 Mod 0.....	* Signal, Smoke, Aircraft Mk 89 Mod 0.....
Flare, Aircraft, Parachute, Mk 24 Mods 2, 2A, 3 and 4	Signal, Illumination, Marine, Mk 3 Mods 1, 2 and 3.....
Projectile Load, Illuminating Mk 4 Mods.....	Signal, Smoke and Illumination, Marine Mks 51, 52, and 53 Mods
	Marker, Location, Marine, Mk 26 Mod 0 and Marker Location, Submarine,... Mk 75 Mod 0.....

*Major items produced

(Continued)

A GOOD NEIGHBOR:

THE FIRST FIFTY YEARS AT CRANE

1941–1991

BY ROBERT L. REID AND THOMAS E. RODGERS

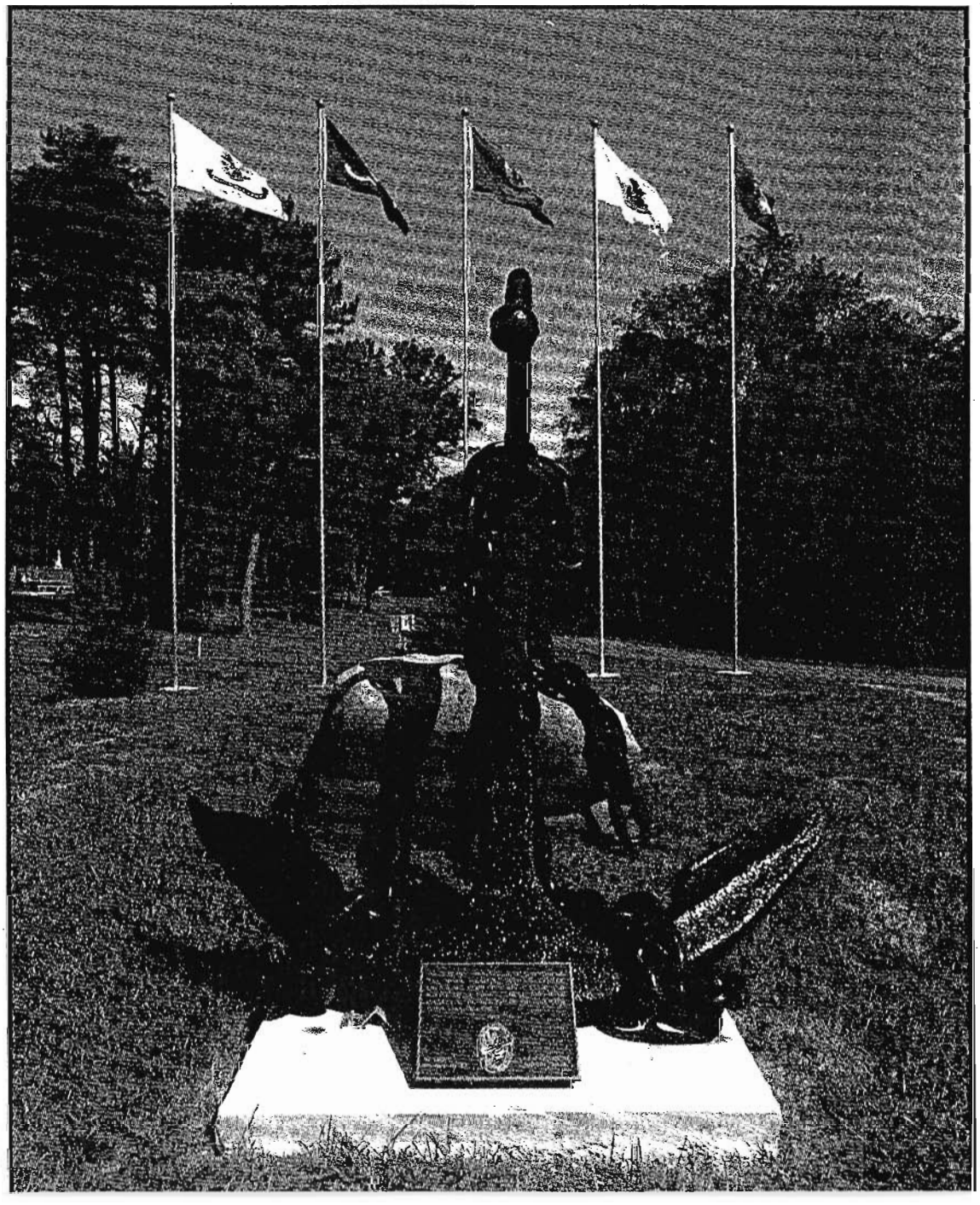

United States
Department of
Agriculture

Soil
Conservation
Service

In cooperation with
United States Department of
Agriculture, Forest Service;
Purdue University
Agricultural Experiment
Station; and Indiana
Department of Natural
Resources, Soil and Water
Conservation Committee

Soil Survey of Martin County, Indiana

IV. ENVIRONMENTAL SETTING

A. Meteorology

The NWSC is located in a temperate climate zone with an average of 44 inches of precipitation annually (Ref. 3, p.5-6). Temperatures vary widely throughout the year with a mean winter low temperature of 26 degrees farenheit and a mean summer high temperature of 89 degrees farenheit. The humidity is generally high, ranging from 40 to 90 percent (Ref. 3, p. 5-6). Winds in southwestern Indiana are generally from the south southwest at an average speed of 8.2 mph (Ref. 21, p.354).

B. Floodplain and Surface Water

The facility is characterized by well developed dendritic surface drainage (Ref. 3, p. 5-19). There are five drainage basins, consisting of seven streams, that carry surface water off site (Ref. 4, p.14). Flow within the drainage basins is generally toward the southwest. The following is a list of drainage basins and the general area that each encompasses within the site (Ref. 4, p.14).

Drainage Basin	Streams Within Basin	Site Drainage Area
Basin I	Furst Creek	Northwest Section
Basin II	Indiana Creek	Extreme Eastern Section
Basin III	Sulphur Creek Little Sulphur Creek	Eastern Section
Basin IV	Boggs Creek Turkey Creek	Central, Southcentral Sections
Basin V	Seed Tick Creek	Southwestern Section

Boggs Creek and Turkey Creek provide the primary surface drainage pathways for the facility. The facility's water supply is from Lake Greenwood in the northwest corner of the site. Lake Greenwood is an 800 acre spring fed lake that discharges to Furst Creek (Ref. 3, p.5-19). Figure 2 provides the location of the surface drainage basins at NWSC.

Sections of facility property bordering the surface drainage routes at NWSC are within the 100 year floodplain. According to NWSC's Part B Permit Application, there are no hazardous waste units located within the 100 year floodplain (Ref. 6, p.B-7).

C. Geology and Soils

The NWSC is underlain by sedimentary rocks of lower Pennsylvanian and upper Mississippian Ages. With the exception of minor outwash and lacustral deposits in the northwest corner of the facility, there are no Pleistocene glacial deposits covering the site (Ref. 19). Surface deposits at NWSC consist of recent (Holocene) and Pleistocene unconsolidated alluvial silt, sand, and gravel and residual soils developed from the underlying rock (Ref. 4, p.10).

The soils covering the NWSC belong to the Zanesville and Muskingum Soil Series (Ref. 4, p. 10). These soils are characterized as dark organic silt loams with underlying mottled tan to gray clay with varying percentages of silt and sand. Soil thickness is variable with values ranging from less than one foot to over 40 feet (Ref. 4, p. 10).

The sedimentary bedrock beneath the facility dips gently to the west southwest. The inclination of the strata reflects NWSC's location on the eastern flank of the Illinois Basin. This section of the basin is comprised of Pennsylvanian and Mississippian strata consisting of shale, sandstone, limestone, and coal (Pennsylvanian) beds. The Pennsylvanian Mansfield Formation (Racoon Creek Group) unconformably overlies the Mississippian Stephensport and West Baden Groups (Ref. 18, Plate No. 1 and p. 151) at the site.

The Mansfield Formation has two distinct vertical divisions (Ref. 18, p.86). The lower division is comprised primarily of sandstone while the upper division consists of predominantly shale and mudstone (Ref. 18, p.86). Thin bituminous coal beds are prevalent throughout the formation.

The Stephensport Group conformably overlies the older West Baden Group. The Stephensport Group has five formations of which three are limestones and two are interbedded shale/sandstone formations (Ref. 18, Plate No. 2, p.13, 52, 56, and 87). Similarly the West Baden Group consists of the alternating carbonate/clastic lithology characteristic of the Stephensport Group with one exception. There is a noticeable lack of limestone tracer beds within a southwest trending linear area of the West Baden Group. This area, that outcrops northeast of the site, is referred to as the West Baden Clastic Belt (Ref. 18, p.43). The Belt consists of sandstone with adjoining bands of silty to sandy shale within the Elivren Formation (Ref. 18, p.43).

D. Groundwater

Groundwater resources at NWSC have not been studied extensively because the facility utilizes surface waters from Lake Greenwood for human consumption, process operations, and recreation. However, the existing lithologies, occurrences of springs and seeps, and the well developed surface drainage indicate the existence of groundwater that is hydraulically connected to the surface environment.

According to a Naval Assessment and Control of Installation Pollutants (NACIP) study, the groundwater at NWSC is divided into two regimes: one associated with soil/alluvial cover and the other associated with the bedrock (Ref. 3, p.5-22). This study reports that shallow groundwater is generally transient occurring during high precipitation periods. Free water within alluvial deposits is likely to percolate into bedrock or be discharged into intermittent streams along alluvial - bedrock contacts (Ref. 3, p.5-22). Table 1 is adapted from the NACIP study, it exhibits the general water bearing properties of the alluvial deposits and bedrock at NWSC.

CHECK LIST OF BIRDS
CRANE DIVISION
NAVAL SURFACE WARFARE CENTER

BIRDS OF CRANE DIVISION

DATE:_____

NOTES:_____

	✓	Jan	Feb	Mar	Apr	May	Jun	Jul	Aug	Sep	Oct	Nov	Dec
Red-throated Loon												• • •	• •
Common Loon													
Pied-billed Grebe													
Horned Grebe													
American Bittern					• • •	• •							
Great Blue Heron													
Great Egret													
Little Blue Heron													
Green Heron													
Yellow-crowned Night-Heron													
Sandhill Crane				• • •	• •					• • •	• •	• • •	• •
Snow Goose													
Canada Goose													
Wood Duck													
Green-winged Teal													
American Black Duck													
Mallard													
Northern Pintail													
Blue-winged Teal													
Northern Shoveler													
Gadwall													
American Wigeon													
Canvasback													
Redhead													
Ring-necked Duck													
Greater Scaup													
Lesser Scaup													
King Eider												• • •	• •
Common Goldeneye													
Bufflehead													
Hooded Merganser													
Common Merganser													
Red-breasted Merganser													
Ruddy Duck													
Turkey Vulture													
Osprey													
Bald Eagle													
Northern Harrier													
Sharp-shinned Hawk													
Cooper's Hawk													
Red-shouldered Hawk													
Broad-winged Hawk													
Red-tailed Hawk													
Rough-legged Hawk													
Golden Eagle													
American Kestrel													

	✓	Jan	Feb	Mar	Apr	May	Jun	Jul	Aug	Sep	Oct	Nov	Dec
Ring-billed Gull													
Herring Gull													
Rock Dove													
Mourning Dove													
Black-billed Cuckoo													
Yellow-billed Cuckoo													
Eastern Screech-Owl													
Great Horned Owl													
Barred Owl													
Long-eared Owl													
Northern Saw-whet Owl													
Common Nighthawk													
Chuck-will's-widow													
Whip-poor-will													
Chimney Swift													
Ruby-throated Hummingbird													
Belted Kingfisher													
Red-headed Woodpecker													
Red-bellied Woodpecker													
Yellow-bellied Sapsucker													
Downy Woodpecker													
Hairy Woodpecker													
Northern Flicker													
Pileated Woodpecker													
Eastern Wood-Pewee													
Acadian Flycatcher													
Willow Flycatcher													
Least Flycatcher													
Eastern Phoebe													
Great Crested Flycatcher													
Eastern Kingbird													
Horned Lark													
Purple Martin													
Tree Swallow													
No. Rough-winged Swallow													
Cliff Swallow													
Barn Swallow													
Blue Jay													
American Crow													
Carolina Chickadee													
Tufted Titmouse													
Red-breasted Nuthatch													
White-breasted Nuthatch													
Brown Creeper													
Carolina Wren													

✓
Jan
Feb
Mar
Apr
May
Jun
Jul
Aug
Sep
Oct
Nov
Dec
Blue-winged Warbler
Golden-winged Warbler
Tennessee Warbler
Orange-crowned Warbler
Nashville Warbler
Northern Parula
Yellow Warbler
Chestnut-sided Warbler
Magnolia Warbler
Cape May Warbler
Yellow-rumped Warbler
Black-throated Green Warbler
Blackburnian Warbler
Yellow-throated Warbler
Pine Warbler
Prairie Warbler
Palm Warbler
Cerulean Warbler
Black-and-White Warbler
American Redstart
Prothonotary Warbler
Worm-eating Warbler
Ovenbird
Northern Water thrush
Louisiana Waterthrush
Kentucky Warbler
Common Yellowthroat
Hooded Warbler
Wilson's Warbler
Yellow-breasted Chat
Summer Tanager
Scarlet Tanager
Northern Cardinal
Rose-breasted Grosbeak
Indigo Bunting
Rufous-sided Towhee
American Tree Sparrow
Chipping Sparrow
Field Sparrow
Vesper Sparrow
Savannah Sparrow
Le Conte's Sparrow
Fox Sparrow
Song Sparrow
Lincoln's Sparrow

NAVY NATURAL RESOURCES AND LAND MANAGEMENT PROGRAM

The Navy and Marine Corps manage more than four million acres worldwide. Much of this land is located in sensitive wetlands along valuable coastlines, some of the most ecologically significant areas in the world. The location of these real estate holdings makes it imperative that the various military missions are planned and executed in harmony with the environment. It is a Department of the Navy goal to promote an environmental protection ethic within the Navy workforce.

The Department of the Navy supports numerous partnerships with other Federal, State, local and private resource groups to promote such programs as the North American Waterfowl Management Plan, Neotropical Migratory Bird Conservation, Wetlands P rotection and Enhancement, and Watchable Wildlife.

To succeed in its mission, and to earn public confidence, the Navy must emphasize natural resources stewardship in every aspect of its land use. It does. Come see for yourself and discover our resources.

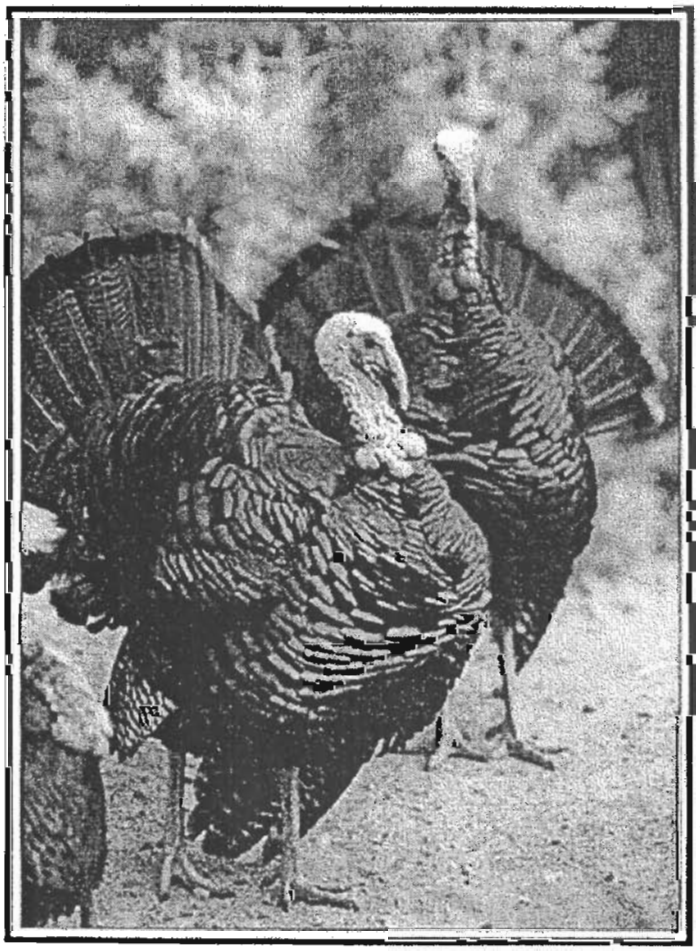

WILD TURKEYS

NAVAL SURFACE WARFARE CENTER
CRANE, INDIANA

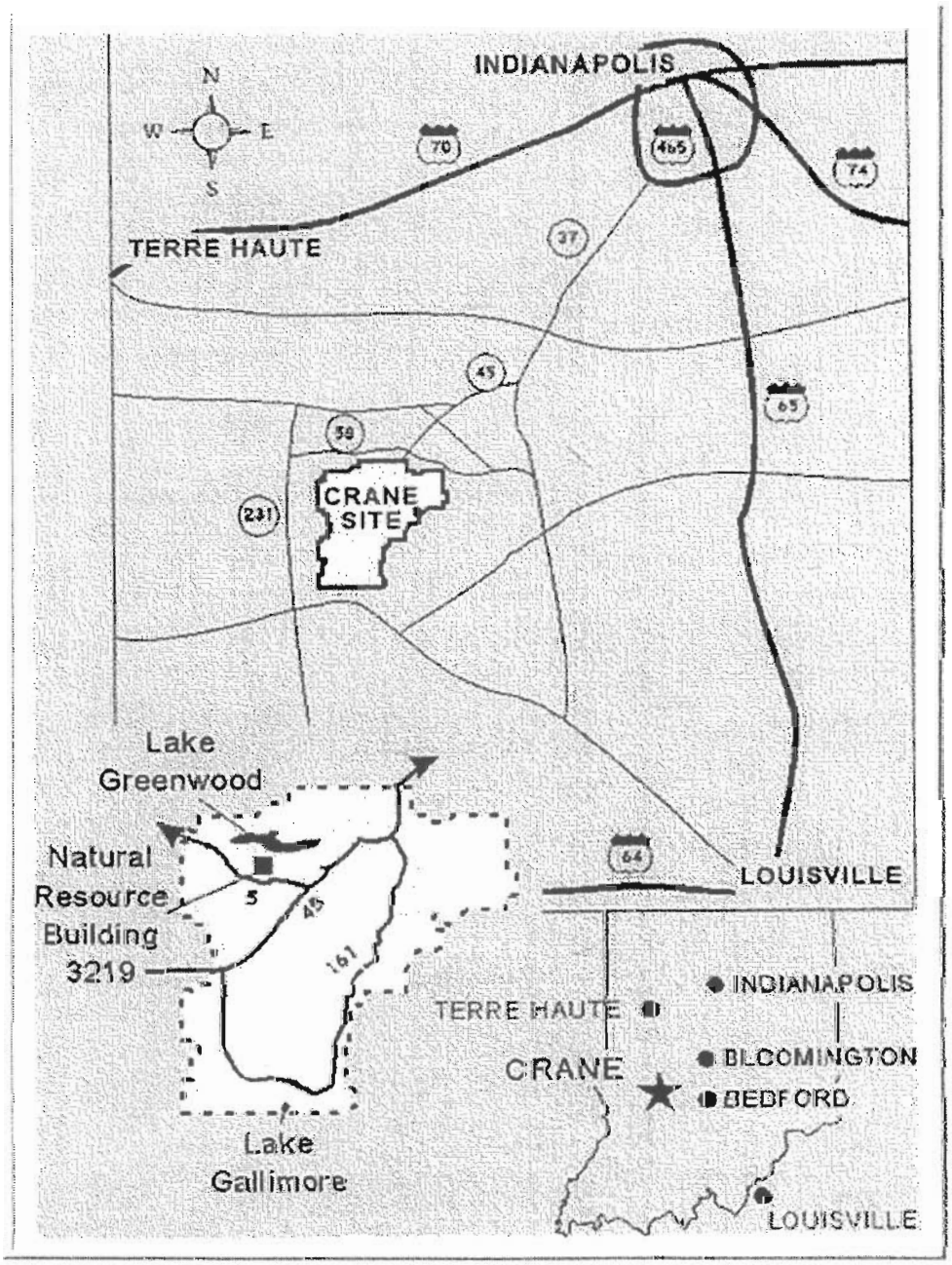

Crane Division's military mission is to provide engineering and industrial base support of Naval weapons systems. Crane Division manages this site, Crane, Indiana, as well as facilities in Louisville, Kentucky. Quality, responsive support of weapons subsystems, equipments and components is provided, as assigned by the Commander, Naval Surface Warfare Center.

Crane site comprises 62,609 acres, of which nearly 49,000 are forested. Oak-hickory, upland mixed hardwood, bottomland hardwood, and pine are the existing forest types. 3,262 acres of wetlands have been identifies, including Lake Greenwood and the extensive marshes of Lake Gallimore. Diversity of the land and successful integration of natural resource management with military mission has resulted in excellent wildlife habitat.

This list was compiled and documented by Dr. Harmon P. Weeks, Jr., Purdue University, who has conducted field studies of birds at Crane Division for over 20 years.

Military mission requirements preclude access by the general public except on special days or with special permission. Please contact the Natural Resources Manager, Mr. Lynn Andrews, (812)854-1165, for information.

The U.S. Navy and the National Fish and Wildlife Foundation are cooperating on an international program to promote conservation of neotropical migratory birds. For more information, call U.S. Navy at (703) 325-0427 or NFWF at (202) 857-0166.

Back to Contents

Detail "A" - Campus Area

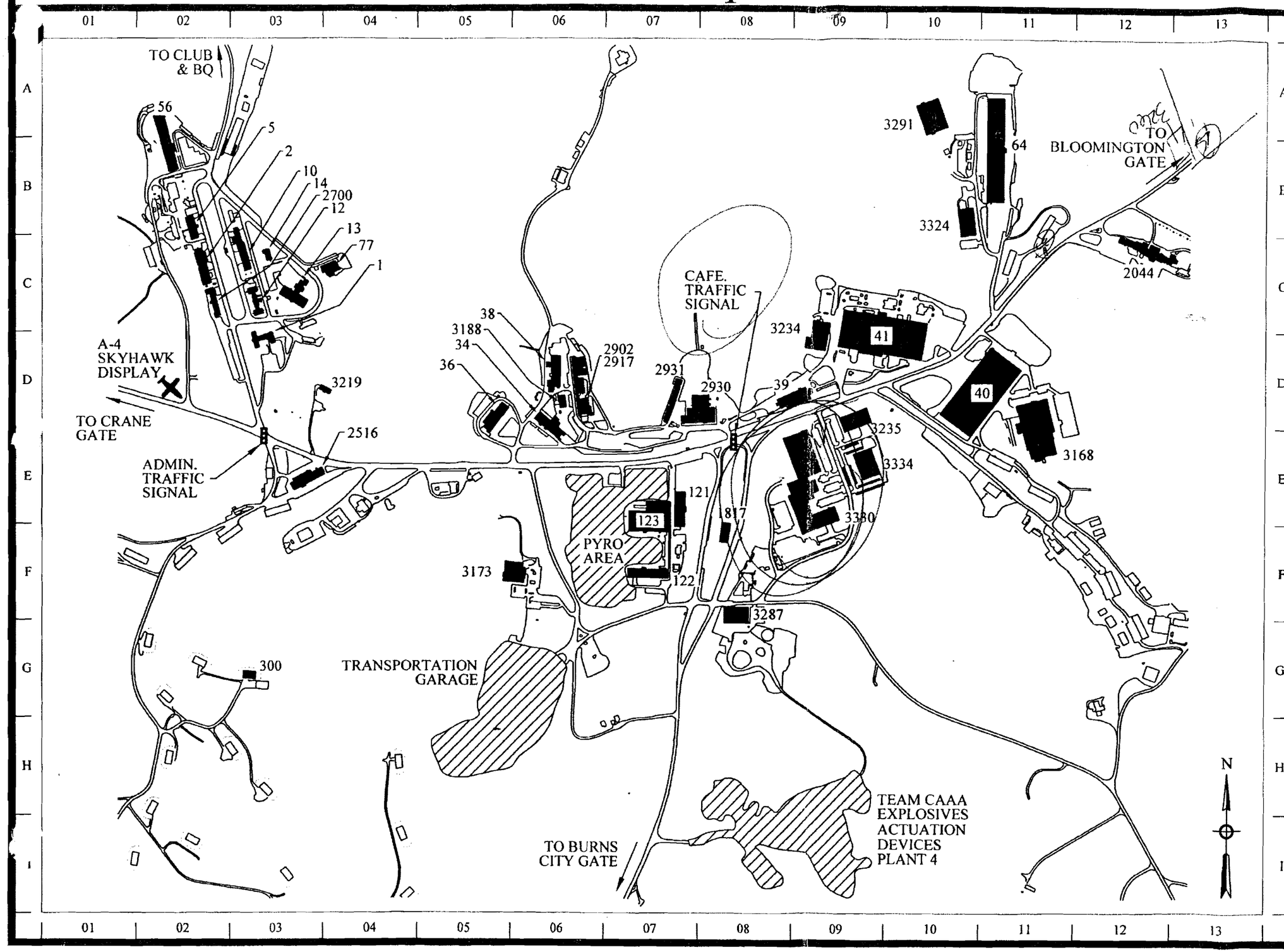

BLDG NO	LOC.	DESCRIPTIVE TITLE
1	D-03	Navy Administration Office
2	C-02	Electronics Maintenance
5	C-02	Human Resources
10	C-03	Fire Station
12	C-03	Medical Dept./Safety Office
13	C-03	Army Administration Office
14	C-03	Multimedia Ed. & Conference Center
34	D-06	Battery Test
36	D-05	Forklift Building
38	D-06	Battery Test
39	D-08	AFGE Union Office
40	D-10	Heavy Materials Warehouse
41	D-09	Electronics Maintenance
56	B-02	Machine/Carpenters Shop
64	B-11	Supply Office
77	C-04	Gymnasium
121	E-07	Cafeteria/Odon Bank/Training
122	F-07	Flare Assembly Building
123	E-07	Army Machine Shop
300	G-03	Post Office
1817	F-08	Credit Union
2044	C-12	Elec. Sys. Engineering
2516	E-03	Public Works Administration Office
2700	C-02	Accounting Building
2902	D-06	Module Test Lab
2917	D-06	Electronics Development Directorate
2930	D-08	Combat Sys. Eng. Division
2931	D-07	Semiconductor Stage & Test
3168	E-11	Fleet Microwave Support Center
3173	F-06	Data Processing
3188	D-06	Electronic Test Lab
3219	D-04	Natural Resources
3234	D-09	Components Finishing Facility
3235	D-09	Lithium Battery Facility
3287	F-08	Battery Evaluation
3291	A-10	Electro-Optics Center
3324	C-09	Bio Chemical Building
3330	E-09	Airborne Complex
3334	E-09	Strategic Weapons Building

NSWC Crane Division

Detail "B" - Warehouse Area

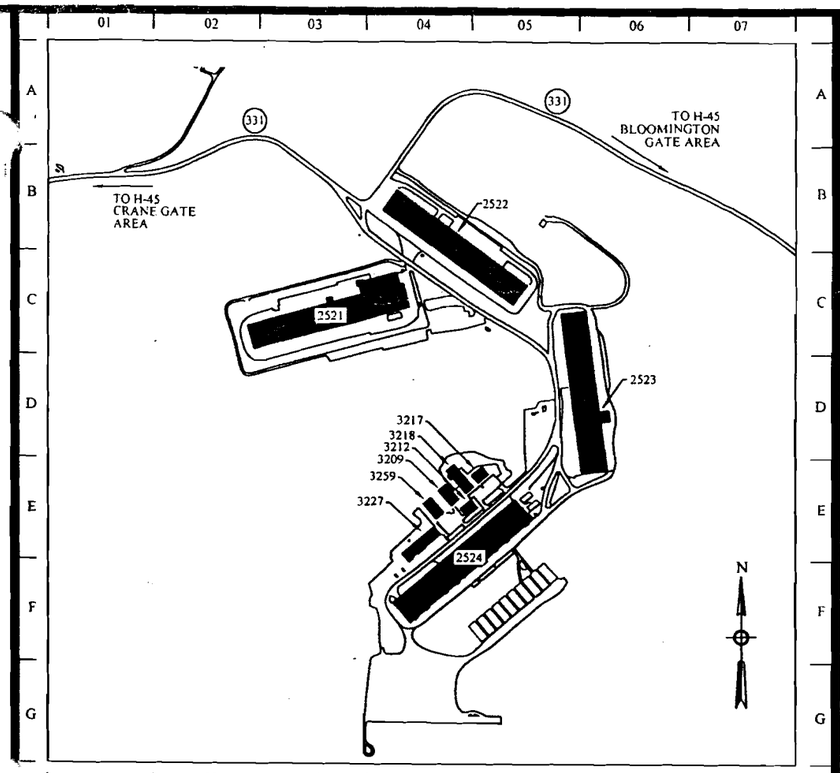

BLDG NO	LOC.	DESCRIPTIVE TITLE
2521	C-03	Small Arms Shop
2522	C-04	General Warehouse
2523	D-05	General Warehouse
2524	E-04	General Warehouse
3209	E-04	Elec. Maintenance Directorate
3212	E-04	Marine Corps Eng. Office
3217	D-05	PM4
3218	D-04	Chem. Agent Detection Facility
3227	E-04	Marine Corps Avenger Test
3259	E-04	Marine Corps Office

Detail "C" - Burns City Gate

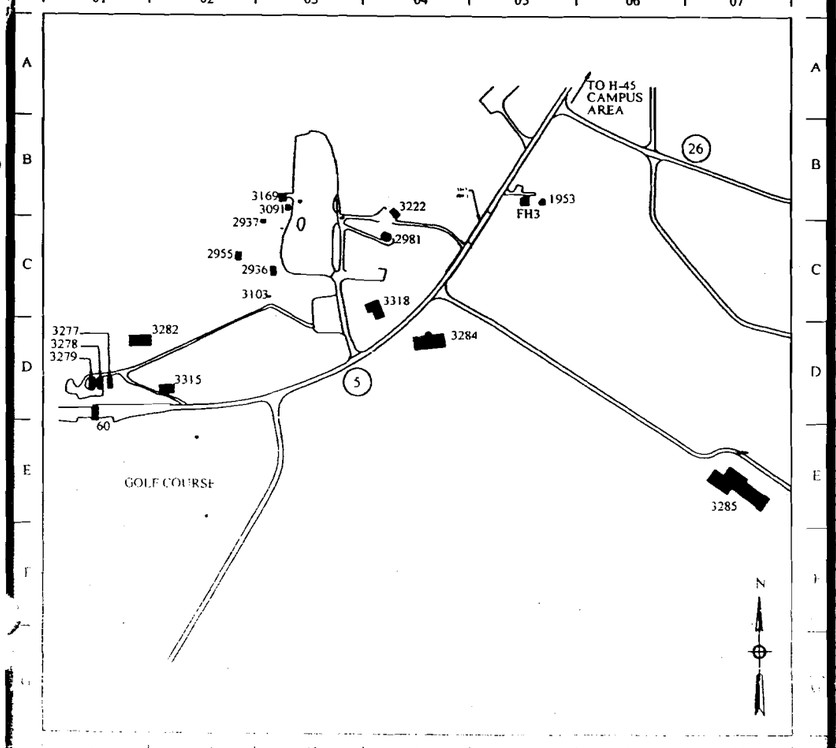

BLDG NO	LOC.	DESCRIPTIVE TITLE
60	D-01	Gate House
1953	B-05	Family Housing
2936	C-03	Shelter House
2937	C-03	Toilet
2955	C-02	Band Stand
2981	C-04	Sonobouy Test Facility
3091	B-03	Admin - Deer Hunt
3103	C-03	DAM - Wildlife Pond
3169	B-03	Natural Res. Garage
3222	B-04	Sonobouy Facility
3277	D-01	Barracks
3278	D-01	Barracks
3279	D-01	Barracks
3282	D-01	Storage Shop
3284	D-04	Ord. Eng. Directorate
3285	E-07	Ord. Environmental Test
3315	D-02	Fire Station
3318	C-04	Fire Station
FH3	B-05	Farm House

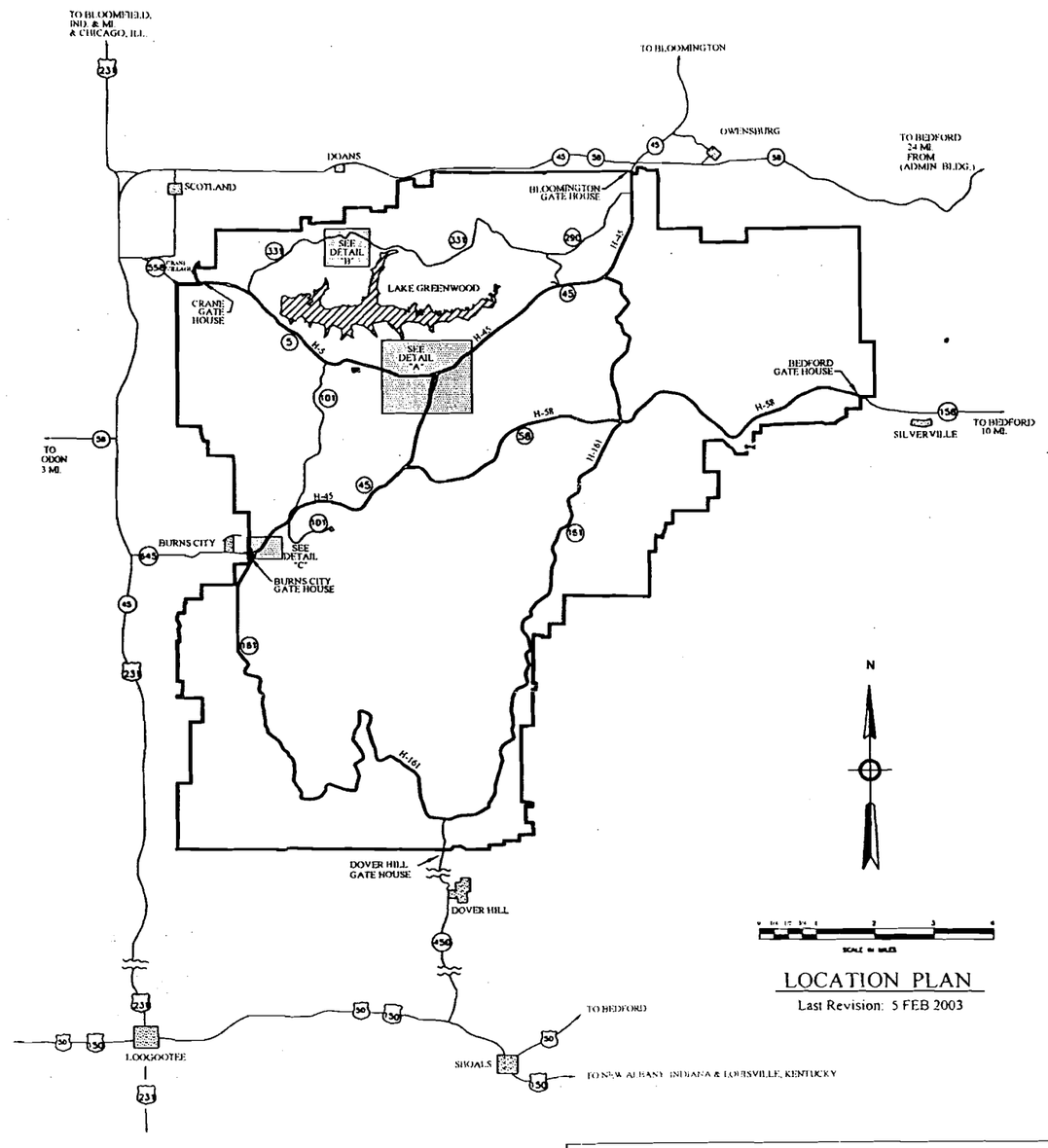

LOCATION PLAN

Last Revision: 5 FEB 2003

Gate Hours	
Bedford Gate	0530-0830 & 1500-1800, Monday-Friday
Bloomington Gate	24 Hours
Burns City Gate	0530-0830 & 1430-1800, Monday-Friday
Crane Gate	24 Hours
Dover Hill Gate	0530-0830 & 1500-1800, Monday-Friday

Travel Distance (Miles)

	BG	BL	BC	CG	DH	CS	AS	WA
Bedford Gate (BG)	X	8.2	12.8	13.8	14	8.9	9.6	12.9
Bloomington Gate (BL)	8.2	X	10.6	10.4	14.2	5.4	6.1	6.8
Burns City Gate (BC)	12.8	10.6	X	7.1	9.3	5.2	5.4	5.3
Crane Gate (CG)	13.8	10.4	7.1	X	15	3.6	4.3	3.7
Dover Hill Gate (DH)	14	14.2	9.3	15	X	12.3	13.8	19
Cate Signal (CS)	8.9	5.4	5.2	3.6	12.3	X	0.7	5.6
Admin Signal (AS)	9.6	6.1	5.4	4.3	13.8	0.7	X	5.2
Warehouse Area (WA)	12.9	6.8	5.3	3.7	19	5.6	5.2	X

Appendix C: Project Source Data – Site Specific

Appendix C-1: B-143 DROP TEST

Table of Contents:
Project Source Data – GB-143 Drop Test

1) Email from Douglas Johnson to Phil Keith. February 23, 2000. Subject: Info on Rockeye bomblets.

2) Shouse, Steve. Personal interview. March 18, 2003.

3) Email from Phil Keith to Sherry McCahill. November 3, 2000. Subject: Range Survey.

Email from Douglas Johnson to Phil Keith. February 23, 2000.

Subject: Info on Rockeye bomblets.

Keith Phillip A CNIN
From: Douglas Johnson [dgj156@crane-smtp.army.mil]
Sent: Wednesday February 23, 2000 4:52 PM
To: 'Keith, Phil'
Cc: Nina LaMar
Subject: Info on Rockeye bomblets

Phil,

Here's what I found so far on the bomblets:

Nomenclature: Bomb, Anti-tank, Mk118 Mod 0 Loaded Assembly DODIC: ???
NSN: 1325-00-X96-7043 (local stock # assigned at Crane)
Total Weight: ???
NEW: 0.41# Comp B or Octol + 70.9 grains CH-6 = 0.01 lbs.
Nina,
Can you fill in the DODIC and total weight info? I don't have a copy of the drawings available. If you don't have this info, let me know and I'll research further.

Thanks
Doug Johnson
SIOCN-SF
854-1481

B-143 drop test

Shouse, Steve. Personal interview. March 18, 2003.

Interview Record

Installation/Range or Site: NSWC Crane, Indiana
B-143 Drop Test

Date/Time: March 18, 2003

Person Conducting the Interview/Title/Organization: Denise Tegtmeyer, Malcolm Pirnie

Person Being Interviewed/Title/Organization: Steve Shouse

Reason for Selecting Person to Interview (i.e., Years at Installation, Position, Previous History, etc.): Formerly trained at the B-143 Drop Test

---

Interview Notes (i.e., Range History, Ordnance Types, Land Use, Historical Records/M Available):

- Currently an Engineering Technician
- Formerly trained at B-143 Drop Test
- Used 1968 to 1980
- Rockeye Bomblets (mark 118, Mod O) - only
- pre-armed
- vacuum tube
- building was 15'x15' (had controls for tower)
- 40 ft. tower (now at OTA) OTA= ordnance test area
- concrete pad
- currently near B143, small ordnance component testing (linear, ED, etc.)

Lake Greenwood

Keith Phillip A CNIN
From: Keith Phillip A CNIN
Sent: Friday, November 03, 2000 3:40 PM
To: McCahill Sherry M NOSA
Subject: RANGE SURVEY

Sherry,
I lucked out - Tom happened to call in so I asked him about the B-143 Drop Test range to clear up the inconsistency in answers for sections, VI.A vs. VI. E.

The answer for VI.A was marked NO because there was never an investigation done on the B-143 drop site range. VI.E. was marked YES because Tom thought we could investigate the B-143 drop site range when the RFI for SWMU 18/13 is undertaken. SWMU 18/13 is designated as Load and Fill Area Buildings and is in the same general area as the B-143 drop site range. The Load and Fill Area Buildings were identified in the IAS report.

I turned-up a copy of the IAS report and read the descriptions for the Pond 330/333 and Conservation Dam No. 2845, also Lake Greenwood. I believe Pond 330/333 is the sedimentation pond to capture sediment from the NW corner of our Demolition Range. Apparently the Conservation Dam No. 2845 was used for limited testing but none of the folks I talked to when we were collecting info for the Range Survey ever mentioned it as a test location.

I had collected some information on Lake Greenwood - it was used from about 1954-1958 during two summers to test Marine Location Markers (MK5-4, MK7-2, MK6-3). About a dozen markers were tested each time and they tested about six time each of the two summers. The markers had wooden bodies and were recovered. Around 1958 there were about six experimental underwater illuminating flares tested - they contained Mg, $NaNO_3$, and polyester binder - and all parts were recovered. They loaded the items into a boat and put them over the side to test them. The test location was about 200-300 yards off-shore at a deep spot (~30 ft.) near the dam. Bernie Douda, a Senior Engineer in the Code 40 pyro group provided the information. His number is 812-854-3420.

None of these locations meet your definition of military range because they were never specifically designated and set aside for range use. Conservation Dam No. 2845 has always been open to employees for fishing and Lake Greenwood has always been used for recreational purposes as well as our drinking water supply.

Hope this helps.
Phil

Appendix C-2: B-2044 DROP TOWER/TEST RAIL

Table of Contents:
Project Source Data – GB-2044 Drop Tower/Test Rail

1) Email from Jack Kramer to Phil Keith. March 27, 2000. Subject: Re:Navy Range Survey.

Email from Jack Kramer to Phil Keith. March 27, 2000.

Subject: Re: Navy Range Survey.

B-2044

Keith Phillip A CNIN
From: Kramer Jack W CNIN
Sent: Monday, March 27, 2000 7:33 AM
To: Coyle Robert W CNIN; Keith Phillip A CNIN
Subject: RE: NAVY RANGE SURVEY

Bill Felton? Now that's a name I haven't heared in a long, long time. Is he alive? I don't know. As for any records of what was tested back then. They just don't exist.

As far as I know, the drop tower area was never "contaminated" with explosive material. All dropped items were removed and thrown away. If they contained explosives, they would have gone to CAAA (Ordnance Department at the time). They would have destroyed them. How I am not sure.

Other than Bob, I can't think of anyone that is still here that was around at that time. Boy does that make us old.

Hope this gives you enough information. If I can think of anything else I'll e-mail you.

jkramer

-----Original Message-----
From: Coyle Robert W CNIN
Sent: Friday, March 24, 2000 5:25 PM
To: Keith Phillip A CNIN
Cc: Kramer Jack W CNIN
Subject: RE: NAVY RANGE SURVEY

Phil,
I know we talked over the phone, but I will put comments after your questions in case there is additional info I can provide.

Robert Coyle
812-854-5501

-----Original Message-----
From: **Keith Phillip A CNIN**
Sent: Thursday, March 23, 2000 10:22 AM
To: Coyle Robert W CNIN
Subject: NAVY RANGE SURVEY

Bob,
I am trying to complete the Navy Range Survey that OESO developed. I am working on data for the B-2044 drop tower complex. Jack Kramer told me you were probably the best point of contact for historical information. Some questions from the survey that you might be able to help me with:
1. Range established ~1951? (provided by PW planning dept.) OK
2. Range last used ~1973? (provided by Jack Kramer) OK
3. How often was range use? Daily, weekly, monthly, other? It was used periodically, but I would estimate about 9 days per month.
4. Are there any historical records of range use? NO Who keeps them?
5. What type of records (if any) were maintained? Any records were summarized showing items performance and would not had addressed where the test were done. The actual data sheets would have shown the location, but would not expect those to have been maintained for more than a few years.
6. What type of ordnance was tested? 20mm cartridges only? Mostly CAD/PADs and 20MM.

7. Estimate of avg. annual gross weight tested? Wt of 840 Lbs. For CAD/PADS That is assuming 0.5 Lbs per item, 20 items a day, 7 days per month.
Wt of 250 Lbs for 20 MM. Assume about 2500 per year and Wt of 0.1 Lb. Per fuze.
Total wt of 1,090 Lbs

8. Estimate of avg. annual NEW tested? NEW of 42 Lbs. For CAD/PADS That is assuming 0.025 Lbs per item, 20 items a day, 7 days per month.
NEW of 9 Lbs for 20 MM. Assume about 2500 per year and Wt of 0.003572 Lb. Per fuze.
Total NEW 51 Lbs

9. Was range debris removed? Yes What happened to it? Visually inspected for residue and then put in trash. Any recycling through DRMO? In the later years when we had dent plates and things that had a lot of metal we started sending to DRMO. But that was about the time we moved this type of work to OTA, PTA then. I would not expect more than a few pallets ever went to DRMO. We were not into recycling and environmental at that time. In most cases we were not even protecting ourselves from residue let alone protecting others.

Jack also mentioned that there was a launch pad that was used to launch a steel mass. I walked the site and didn't see anything that looked like a launch pad. I noticed an I-beam rail with a movable carrier/pusher. Any enlightenment on these features would be helpful.

The I beam was used as a rail to propel carriages as a velocity measurement in the test of CADs. It was replaced by a launch pad. The pad was removed when we stopped testing. These test and hardware were moved to OTA and then later were moved to Indian Head where the test are still being performed today.

Am trying to wrap up data collection by 3/29 so I can get the survey to B-1 for review and signature prior to the 30 April submission deadline. I know you are on the road and very busy but it looks like "YOU THE MAN" on this one.

Also, I think I left you a voice mail about some items you had tested over at the Dugger Lake facility in 1977. In Tim Moody's logbook they were described as SEC and ECD. What are these and was there a DODIC/NALC or NSN?

The phone discussion adequately covered this topic. Jack is Bill Felton still alive?

As a POC at Indian Head for additional CAD info, I would suggest LCOL Joe Schuppel (he is an AF Officer and the deputy PM for CAD/PAD). His phone number is 301-744-6636 DSN 354 and his e-mail is schuppeljn@ih.navy.mil <mailto:schuppeljn@ih.navy.mil>.

Phil, that is the best I can do. I am copying Jack on this e-mail in case some of this might jog Jack memory of any thing else that would need to be added.

Also, Jack if there are any files they would be in 405's area. I do not take info with me when I leave an area. Always thought the following person would need them. Would you check the repository there?

Appreciate your help,
Phil Keith
x-6157

B-2044

Keith Phillip A CNIN
From: Trout Mary M (Linda) CNIN
Sent: Thursday, March 30, 2000 7:48 AM
To: Davis Jeffrey M CNIN
Cc: Keith Phillip A CNIN
Subject: FW: DROP TOWER

Jeff - Could you please take care of this and answer Phil?
Phil - I am sending this to Jeff Davis, Code 60. He will be able to answer your question(s). I am Code 80. Thanks.

-----Original Message-----
From: Keith Phillip A CNIN
Sent: Wednesday, March 29, 2000 3:02 PM
To: Trout Mary M (Linda) CNIN
Subject: DROP TOWER

Linda,
I left you a voice mail but it may have been unclear as to what I am trying to accomplish. I am completing a Navy Range Survey for NAVSEA's environmental office. They are collecting information on Navy military ranges that are currently in use or have been used in the past to test/train with/dispose ordnance. Behind B-2044 there is a drop tower (B-2795) testing area that was used to test 20mm cartridges and CAD/PAD items. This facility is still there and Harold Stone in PW planning tells me that Code 60 owns it. I found out information on testing that was done from Bob Coyle and Jack Kramer. I need to enter this information onto the survey forms. There are different forms to use depending on if the facility (range) is in an inactive status or if it has been permanently closed. I am trying to find out which status applies to the drop tower area behind B-2044.

Thanks,
Phil Keith
x-6157

Jeff Davis called 3/30/00. Said to consider the B-2044 test range closed. Would need new site approval anyway.

PK

Appendix C-3: B-2930 PROCESS CONTROL AREA

Table of Contents:
Project Source Data – GB-2930 Process Control Area

1) Notes from interview of Retiree by Steve Shantz. March 16, 2000.

Notes from interview of Retiree by Steve Shantz. March 16, 2000.

B-2930 Process Control 3/16/00

Via. Schultz from retiree

Proc. Cont. for star-shell area.
1963-1968 OED P.C. test area.
OED was upstairs in B-39

MK 24 Aircraft Parachute Flare - dense white smoke
Smokes, flares

No records exist

POC = Bob Russell - was over Ordnance Dept QA.
↳ Mike Reed - Ret., Guy Aldridge - deceased,
Morris Trowbridge - Ret, Jim Armour - Ret
Dan Hoffman - Ret.

Did testing on back-side of the lot.

50' dia. circle for test area

~~NW corner little bit of fence in area~~
~~out door test area~~

~~Test been area w/ fence N.W. corner~~

Appendix C-4: PYRO AREA OUTSIDE TEST BURN PAD

Table of Contents:
Project Source Data – Pyro Areas Outside Test Burn Pad

There are no site specific references for the Pyro Areas Outside Test Burn Pad. All source data is provided in Appendix B, Project Source Data – General.

Appendix C-5: TEST PADS ON HILL BEHIND B-198

Table of Contents:
Project Source Data – Test Pads on Hill Behind B-198

1) Naval Weapons Support Center, Crane, Indiana. Special Job Procedure; Procedure for Testing of 2.75-inch warheads at Test Site Behind Building 198. April 18, 1983.

2) Ordnance Environmental Support Office, Activity Files. List of Items Tested to be Tested at Ordnance Test Area, Rocket Range, B-198 R&D Test Area. Date Unknown.

Special Job Procedure; Procedure for Testing of 2.75-inch warheads at Test Site Behind Building 198.

SJP: 596
DATE: 18 April 1983

SPECIAL JOB PROCEDURE

PROCEDURE FOR TESTING OF 2.75-INCH WARHEAD
AT TEST SITE BEHIND BUILDING 198

Prepared by

Applied Sciences Department
Naval Weapons Support Center
Crane, Indiana

Prepared by _____ 4/16/83
Date

Approved by _____ (Project Engineer) 4/18/83
Date

Approved by _____ (Preparer's Supervisor) 4-25-83
Date

Approved by _____ (Requesting Div. Mgr.) 4-25-83
Date

Approved by _____ (Area Custodian) 4/16/83 4/19/83
Date

Approved by _____ (Performing Div. Mgr.) 5/19/83
Date

Approved by _____ (Center Industrial Hygienist) 4/29/83
Date

Approved by _____ (Safety Department) 4/29/83
Date

Approved by _____ (Environmental Program Manager) 5/2/83
Date

Approved by _____ (Department Director) 5-19-83
Date

ASD HAZARD ANALYSIS
NWSCC 5100/28 (3/82)

SJP NO: 1596

DATE: 18 April 1983

SJP TITLE: Procedure for Testing of 2.75-Inch Warhead

HAZARD ANALYST:

CHECKED BY:

STEP NO.	PAGE REF. TITLE PAGE	TITLE	TRIGGERING EVENTS	ACCIDENT'S CONSEQUENCES	ACC. PROB.	HAZARD CATEGORY
	1	c, d, e, and f	Current in firing leads, static electricity	Ignition of blasting cap	ACC	III
	2	Step 1	Current in firing leads, static electricity	Ignition of blasting cap	ACC	III
	2	Step 2	Current in firing leads, static electricity	Ignition of blasting cap	ACC	III

SJP: 1596
DATE: 18 April 1983

PROCEDURE FOR TESTING OF 2.75-INCH WARHEAD
AT TEST SITE BEHIND BUILDING 198

1. Purpose: The purpose of this Special Job Procedure is to establish a safe method of testing and disposing of Dayglo dyes, Solvent Yellow 33, MIL-STD-3284 (Red).

2. Scope: This procedure applies to all personnel assigned to perform the operations described herein.

3. Responsibilities:

a. Project Engineer - The project engineer is responsible for any changes or variations of the test procedure routing.

b. Control Technician - The control technician is responsible for conducting the test procedure and for understanding and complying with the requirements of NAVWPNSUPPCENINST 5100.22B.

4. Equipment:

a. Firing Box

b. Stand

c. Blasting Cap (M6 or stronger cap)

d. Radio

5. Description of Work:

a. All personnel will retreat to a firing site (trailer) specified by Code 5061 and approved by Code 0412.

b. Test technician will ensure the firing device is turned off, firing leads are disconnected and properly shunted.

c. Place blasting cap in steel tube or behind barricade (M6 or stronger cap).

d. Proceed with priming by attaching cap lead wires to ground strap.

e. Attach blasting cap to shorted lead wires and remove ground strap.

f. Tape cap on or into unit which may contain C-4, Baratol, or TNT explosives.

g. Proceed back to trailer and assure all personnel are inside trailer.

h. Unshunt firing leads and attach to firing box.

SJP: 1596
DATE: 18 April 1983

PROCEDURE FOR TESTING OF 2.75-INCH WARHEAD
AT TEST SITE BEHIND BUILDING 198

i. Give countdown and fire blasting cap.

j. In case of misfire, see Misfire Procedure.

6. Misfire Procedure:

Step 1. If blasting cap report is not witnessed:

a. Try firing two more times.

b. If still no report, wait twenty minutes.

c. Shunt firing leads and remove bad cap.

d. Repeat steps a through j above.

Step 2. If blasting cap report is witnessed, but high explosive fails to detonate:

a. Wait twenty minutes.

b. Repeat step b of Step 1.

c. Remove unit to a safe area into a container for further disposal at area approved by Code 0412 and Code 0924.

7. Pollution Control

a. Before firing target marker, spread sand around firing area to a thickness of 3 inches to 6 inches and to a circular diameter of approximately 200 feet.

b. When instructed by Code 0924, remove upper portion of sand area, making sure to remove pigment that has been dispersed onto the sand.

c. Place "wasted sand" in a location which will be specified by Code 0924.

d. The "wasted sand" will then be disposed of by Code 0924.

8. Safety

a. Safety shoes and glasses for explosive handlers.

b. Test technician will have approved respirator and will give the "All-Clear" for next test.

c. Area safety rules apply (see Step 6)

d. Fire "Stand-by for Test".

PROCEDURE FOR TESTING OF 2.75-INCH WARHEAD
AT TEST SITE BEHIND BUILDING 198

e. Radio for outside help if needed.

f. Building 198 supervisor will be contacted prior to testing to see if any devices sensitive to radio signals are being used in Building 198.

g. Radio shall not be used within 300 feet of Building 198.

Hazard Control Briefing Form

1. Job or Project

2.75" Colored Target Marker Program

2. SWP or Authorization Title and No.

3. Description

A. Sketch (attach if available). Attached to work authorization

B. Assembly Hazards

Avoid breathing and skin contact with dust from dye pellets. Accidental ignition of unit is possible.

C. Sequence of Events when Functioned

The item is functioned through use of a blasting cap detonating the C-4 booster which then detonates the Baratol imploding charge. The imploding charge sublimes the dye pellets which form a colored smoke cloud.

D. Performance

The dye pellets become an aerosol cloud upon detonation of the imploding charge.

4. Special Hazards

The dye may be carcinogenic. Avoid breathing and skin contact with the dye. Dye may be eye and skin irritant.

5. Hazards of Chemical Ingredients and/or Combustion Products

The dye pellet dust should not be breathed and not allowed to contact skin as it might irritate the skin.

6. Results of Accidental Activation

The dye pellets would become an aerosol. Fragments from the metal case might cause death. All spilled composition or pellets shall be cleaned up with a composition brush and conductive dust pan. Cotton coveralls or shopcoat to be worn during C-4 operation.

DAYGLO

TOXICITY

Because of the large number of pigments and colorants (considering color and type) which Day-Glo Color Corp. offers, it is impractical to conduct toxicity tests on all items.

We have, however, had toxicity test run on what we consider to be representative samples, and the following tests results have been reported:

		A, AX T, GT	HM HMS	Z	S
Acute Oral Toxicity	LD $_{50}$ g/kg>	16.0	23.1	10.25	10.0
Acute Dermal Toxicity	LD $_{50}$ g/kg>	23.0	10.2	10.25	2.15
Acute Dust Inhalation	LC $_{50}$ mg/L air>	4.4 (4 hrs.)	3.0	1.1	8.3
Eye Irritation		No significant irritation	mildly irritating	mildly irritating	slight transient irritant

The representative colors which were tested in each series contain the same dyes and resin matrices similar to the other pigments or colorants in the series (except Signal Green and Horizon Blue) but in different proportions. Signal Green and Horizon Blue materials contain about 1 percent of a pthtalocyanine green or blue toner. These toners are not considered toxic materials.

None of the pigments are radioactive nor do they contain any inorganic phosphors, lead, or mercury. We do not add metals to our pigments. In an analysis which we made of one of our pigments, metals, if any, were reported only in trace amounts.

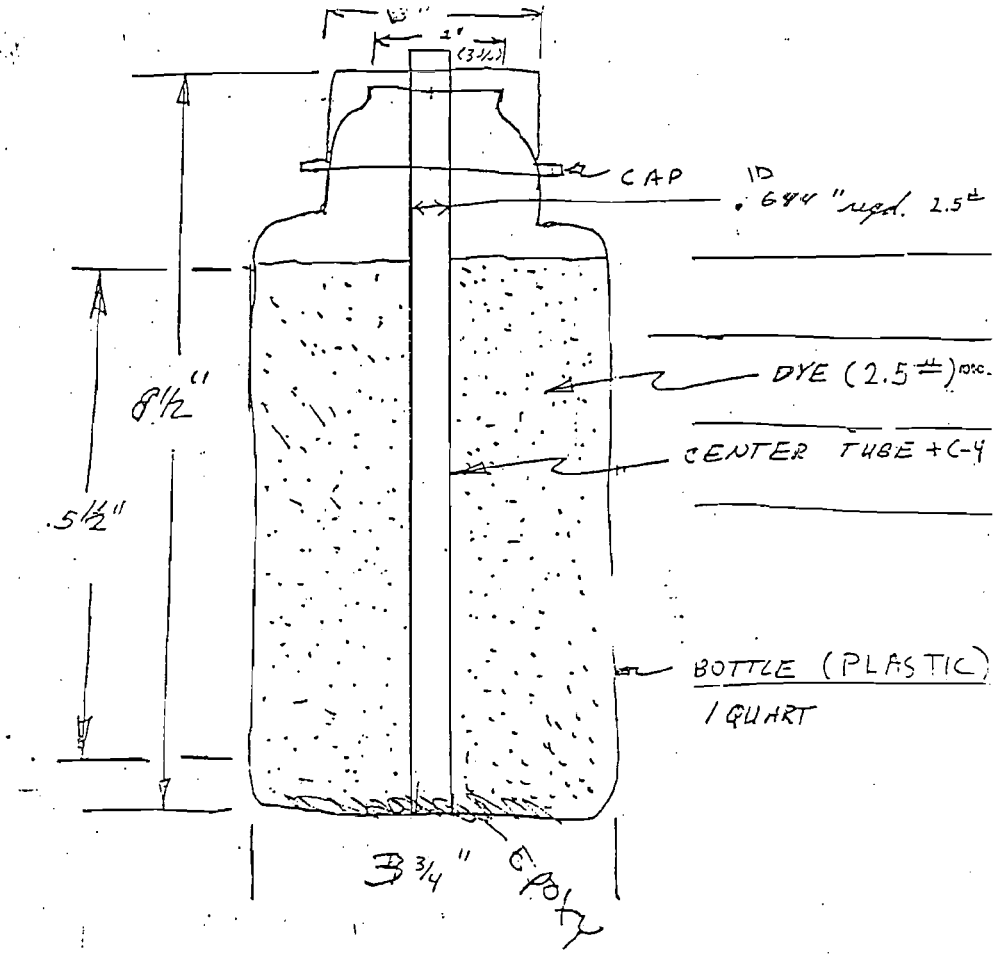

CENTER CORE WILL BE MADE OF Aluminum/Steel/Paper.
IT WILL BE FILLED WITH C-4

TEST CANISTER ASSEMBLY

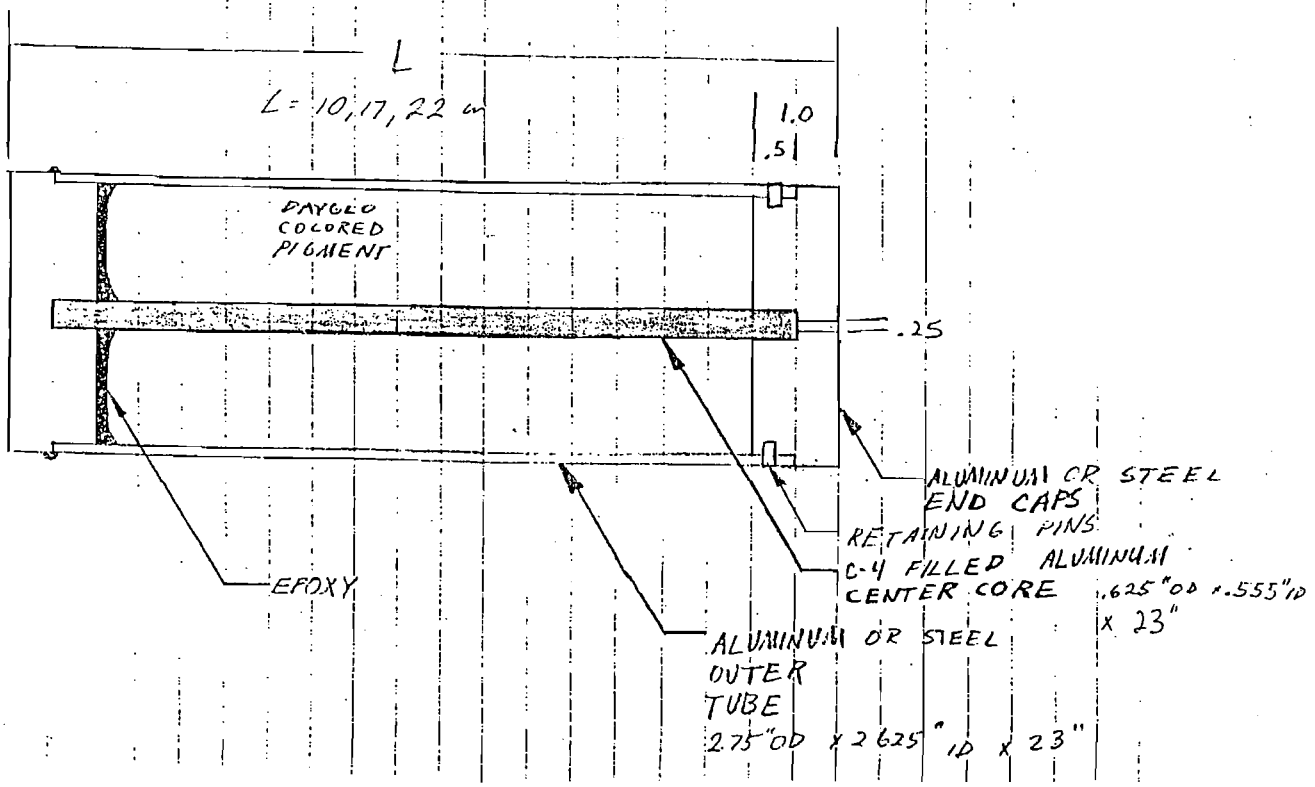

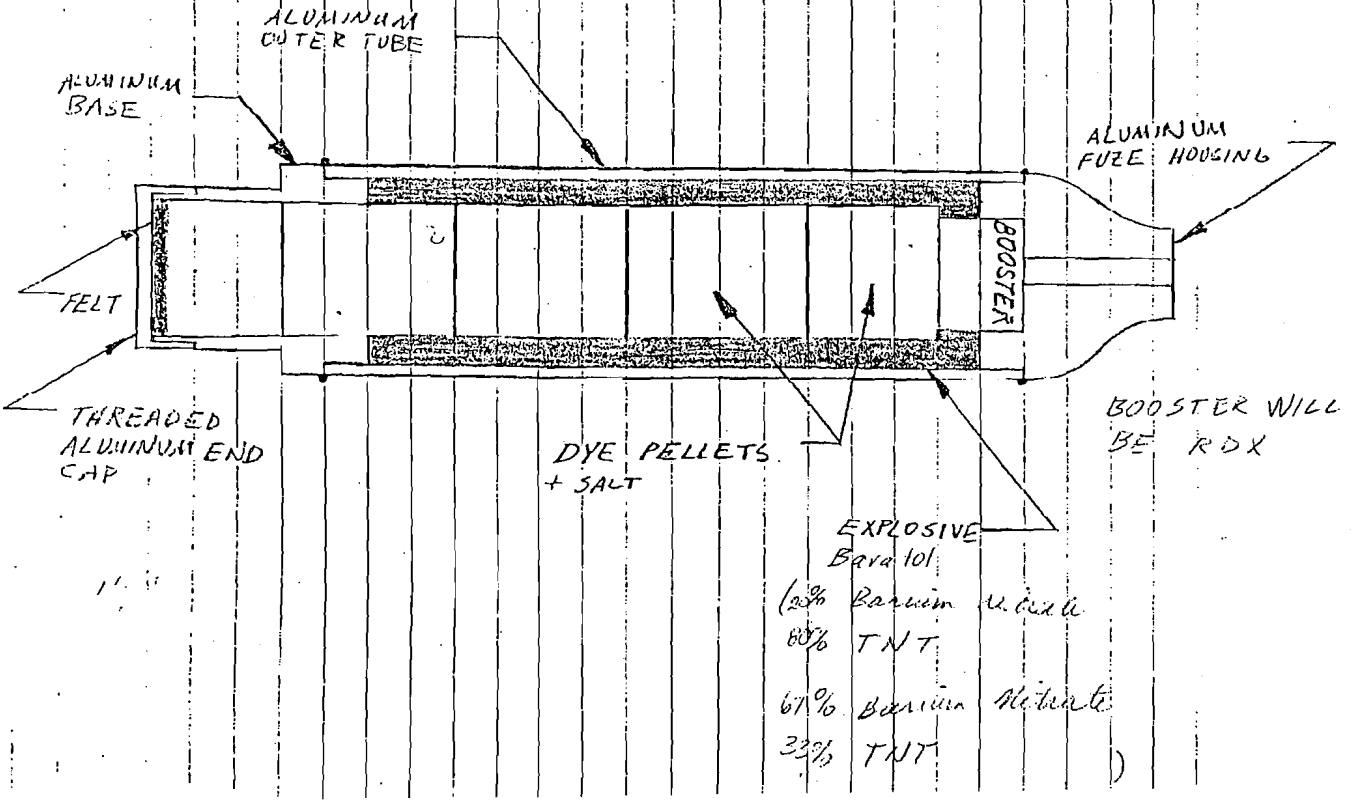
ALUMINUM OUTER TUBE
ALUMINUM BASE
ALUMINUM FUZE HOUSING
BOOSTER
FELT
THREADED ALUMINUM END CAP
DYE PELLETS + SALT
BOOSTER WILL BE RDX
EXPLOSIVE
Baratol
20% Barium Nitrate
80% TNT
67% Barium Nitrate
33% TNT

[illegible]	
[illegible]	91
[illegible]icizer, non-[illegible]icative	5*
[illegible]nuing polyisobutylene 2.1%; motor oil [illegible] and di(2-ethylhexyl) sebacate 5.3%.	
[illegible] Ratio	
[illegible] Sensitivity, 2 Kg Wt:	
[illegible] Mines Apparatus, cm	100+
[illegible] Wt 20 mg	
[illegible]nny Arsenal Apparatus, in.	19
[illegible]le Wt, mg	27
[illegible]ranulum Test:	
[illegible]	Unaffected
[illegible]	Unaffected
[illegible] Bullet Impact Test:	Trish
	%
[illegible]ion	0
[illegible]	0
[illegible]	20
[illegible]	80
[illegible] Temperature:	°C
[illegible]	
[illegible]	270
[illegible]	
[illegible]	
[illegible]	
[illegible]mmercial Heat Test: [illegible] in 48 Hrs	
[illegible] Heat Test:	
Loss, 1st 48 Hrs	0.13
Loss, 2nd 48 Hrs	0.00
[illegible]ition in 100 Hrs	None
[illegible] Stability Index:	
[illegible] to 200°C, 95% RH	Nil
[illegible]tability:	

Molecular Weight:	
Oxygen Balance:	
CO_2 %	
CO %	
Density: gm/cc	
Melting Point: °C	
Freezing Point: °C	
Boiling Point: °C	
Refractive Index, n_D^{20}	—
n_D^{25}	
n_D^{30}	
Vacuum Stability Test:	
cc/40 Hrs, at	
90°C	
100°C	0.25
120°C	
135°C	
150°C	
200 Gram Bomb Sand Test:	
Sand, gm	[illegible]
Sensitivity to Initiation:	
Minimum Detonating Charge, gm	
Mercury Fulminate	
Lead Azide	0.03
Tetryl	0.10
Ballistic Mortar, % TNT: (c)	[illegible]
Trauzl Test, % TNT:	
Plate Dent Test: (c)	
Method	B
Condition	Hand tamped
Confined	No
Density, gm/cc	1.60
Brisance, % TNT	115
Detonation Rate: (d)	
Confinement	None
Condition	Hand tamped
Charge Diameter, in.	1.0
Density, gm/cc	1.59
Rate, meters/second	8240

Composition C-3

Fragmentation Test:

19 mm HE, M71 Projectile, Lot WC-91:
Density, gm/cc
Charge Wt, lb

Total No. of Fragments:
For TNT
For Subject HE

3 inch HE, M42A1 Projectile, Lot KC-5:
Density, gm/cc
Charge Wt, lb

Total No. of Fragments:
For TNT
For Subject HE

Fragment Velocity: ft/sec
[illegible] ft
[illegible] ft
Density, gm/cc

Relative to TNT:

In Air:
Peak Pressure
Impulse
Energy

In Confined:
Impulse

Under Water:
Peak Pressure
Impulse
Energy

Underground:
Peak Pressure
Impulse
Energy

Shaped Charge Effectiveness, TNT = 100:

	Glass Cones	Steel Cones
Hole Volume		
Hole Depth		

Color: Light brown

Principal Uses: Plastic demolition explosive

Method of Loading: Hand tamped

Loading Density: gm/cc 1.60

Storage:

Method: Dry

Hazard Class (Quantity-Distance): Class 9

Compatibility Group: Group I

Exudation: None at 77°C

Effect of Temperature on Rate of Detonation: (1)

16 kbar at, °C	-54	21
Density, gm/cc	1.59	1.55
Rate, m/sec	7020	7040

Plasticity:

Below 0°C	Plastic (-57°C)
0-60°C	Plastic
Above 60°C	Plastic (77°C)

[illegible] 61

[illegible]ufacturing Composition C-3. The mixed plasticizing agent is heated in a melting kettle [illegible] water-wet RDX is added and heating and stirring are continued until all the water is [illegible]. This mixture is then cooled and hand pressed into demolition blocks or special item [illegible].

[illegible]tion C-4 is prepared by hand kneading and rolling, or in a Schrader Bowl mixer. RDX [illegible] size or less with the polyisobutylene-plasticizer previously made up in ether. The [illegible] blended explosive is dried in air at 60°C and loosely packed by hand tamping to its [illegible].

Note

[illegible]d by the British during World War II as a plastic explosive which could be hand [illegible] was standardized in the United States during World War II and subsequent development [illegible] were designated C-2, C-3 and C-4.

[illegible] by Chemical Decomposition:

[illegible]tion C-3 is decomposed by adding it slowly to a solution composed of 1 1/4 parts [illegible]xide, 11 parts water, and 4 parts 95% alcohol, heated to 50°C. After addition of [illegible] C-3 is complete, the solution is heated to 80°C and maintained at this temperature [illegible]ites.

[illegible]

[illegible]atter of Div 2 and 6, NDRC, Report on RDX and Tritonal, OSRD No. 1406, 31 July 1945.

[illegible] A. Vroman and Dorothy Pipes, Table of Military High Explosives, Second Revision, [illegible] No. [illegible], 15 July 1946.

[illegible] Wallcupall, Methods of Physical Testing, OSRD Report No. 503, 11 August 1943.

[illegible] Autr and H. H. Ryston, Physical Testing of Explosives, Part III - Miscellaneous [illegible] Performance Tests, OSRD Report No. [illegible], 27 December [illegible].

[illegible] Lowery, The Rate of Detonation of Various Explosive Compounds, OSRD Report No. [illegible] 1945.

[illegible] F. Parkitt, The Rate of Detonation of Various Compounds and Mixtures, OSRD Report No. [illegible] 1945.

[illegible] H. Dallinson, Jr., Blast Effects of Bomb Explosives, PA Tech Div Lecture, 9 April [illegible].

[illegible]stem Laboratory, du Pont, Investigation of Cavity Effect, Sec III, Variation of Cavi[illegible] with Explosive Composition, NDRC Contract W576-ORD-5723.

[illegible] Laboratory, du Pont, Investigation of Cavity Effect, Final Report, 15 September [illegible] Contract W-672-ORD-5723.

[illegible] [illegible]rth and J. E. Walton, A Consideration of RDX/Wax Mixtures as a Substitute for [illegible], BoB Memo 10,303, 21 June 1945.

[illegible] 1, page 10.

Compositions C, C-2, C-3, C-4

W. McCarty and T. M. Stevens, Detonation Rates of the More Important Military Explosives at Temperatures, LASL No. 2353, November 1959.

are the following Picatinny Arsenal Technical Reports on RDX Composition C:

	0	1	3	4	5	6	7	8	9
C	1260		1293					1518 1838	
C-2			1293			1416		1518	
C-3		1611	1713	2154	1595 1635 1885	1416 1556 1766 1766	1797	1515 2028	
C-4							1907	1828 1958	1839

7. Hazard Data (If not available compare known formulations if possible)

See attached.

Presented by _____ _____
Signature Date

Building Supervisor _____ _____
Signature Date

OPERATOR SIGNATURE SHEET

SOP/SJP/AUTHORIZATION _____

Starting Date: _____ Estimated Completion Date: _____

Hazard Briefing (hours) _____

Operator		SUPERVISOR		
This is to certify that I have read, and I understand, the procedures. I have received a hazard briefing and understand the potential dangers.		I have conducted drills/practice runs and/or observed operations to assure the person whose signature appears to the left can perform the procedure described.		
SIGNATURE	DATE	SIGNATURE	DATE	REMARKS

Enclosure (2)

1-METHYLAMINOANTHRAQUINONE

(1-N-methylaminoanthraquinone, Celliton Pink R, Duranol Red GN, C.I. 60505, C.I. Disperse Red 9)

Formula: $C_{15}H_{11}NO_2$

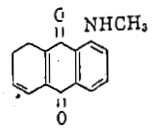

		Refs.
Specification No.:	MIL-D-3824	84, 48A
Spec. covers two grades differing in granulation.		
Molecular Weight:	237.11	
Crystalline Form:	needles	SSV14
Color:	yellow-red	84
Density, g./ml.:		
Apparent Density:	(Spec) 0.35 ± .15	
Coefficient of Thermal Expansion:	—	
Heat of Formation:	—	
Free Energy of Formation:	—	
Entropy:	—	
Melting Point:	443°K (170°C)	84
Spec. grade II, min.:	442°K (169°C)	
Heat of Fusion:	—	
Boiling Point:	—	
Heat of Vaporization, Kcal./mole at 25°C and 1 atm.:	28.4 ± 0.7	Addnl. Ref.
Entropy of Vaporization, vapor at 1 atm., cal./mole/°C:	52.87 ± 0.30	Addnl. Ref.
Heat of Sublimation: Kcal./mole:	30.85	Addnl. Ref.
Heat Content or Enthalpy:	—	
Heat Capacity:	—	
Decomposition Temperature:		
For TGA see Ref. 80	—	
Decomposition Products:		Addnl. Ref.
Vapor Pressure: $\log_{10}P$ (cm Hg) $= \frac{a}{T} + b$		
$a = -6740$; $b = 13.435 \pm 0.036$; T = abs. temp.		80
Energy of Activation for Volatilization (97% purity), Kcal./mole at 297–376°C:	19.6	
X-Ray Crystallographic Data:	—	
Hygroscopicity:	—	

1-Methyla

Solubility
In wa
In alc
In CH
In ben
In fun
Health Ha
Spec.
Skin C
tion."
Safety Clas
OSM:
ICC:
Fire and E
Electrostati
Use in Pyro

Additional
1) "Va
178,
2) "Th
G. F
3) "A
men
son,
4) For
5) J. So

1-Methylaminoanthraquinone (page 2)

Solubility Data:		
In water, g./100 ml. at 25°C:	< .0002	Addnl. Ref. 5
at 80°C:	0.00055	
In alcohol (abs.) at 60°C:	14.96 g./l.	92, 88V14 I, 84
In $CHCl_3$, hot dil. HCl, glacial acetic acid:	soluble	
In benzene:	soluble, red	
In fuming H_2SO_4:	soluble, light yellow	
Health Hazard:	toxicity unknown	92, 93

Spec. requires each container be conspicuously labeled, "Caution—Avoid Skin Contact or Breathing of Dust or Fumes. Use with Adequate Ventilation."

Safety Classifications:	
OSM:	not listed
ICC:	not listed
Fire and Explosion Hazard:	——
Electrostatic Sensitivity:	——
Use in Pyrotechnics:	to color smoke mixtures red

Additional References:

1) "Vapor Pressures of Some Dispersed Dyes," R. S. Bradley et al., Nature *178*, 998 (1956)

2) "The Dyeing Phenomena of Acetate Artificial Silk," V. Kartaschoff and G. Farine, Helv. Chim. Acta. *11*, 822 (1928)

3) "A Radioactive Ionization Gauge and Its Application to the Measurement of Latent Heat of Vaporization," J. H. Benyon and G. R. Nicholson, J. Sci. Instruments *33*, 376 (1956)

4) For Absorption Spectra see Ref. 66

5) J. Soc. Dyers Colourists *70*, 68-77 (1954)

f. 3

f. 1

f. 1

f. 1

AD

CHEMICAL SYSTEMS LABORATORY TECHNICAL REPORT

ARCSL-TR-81103

SUBSTITUTION OF NONTOXIC DYES IN M18 GRENADE

by

Michael D. Smith

Munitions Division

January 1982

US ARMY ARMAMENT RESEARCH AND DEVELOPMENT COMMAND

Chemical Systems Laboratory

Aberdeen Proving Ground, Maryland 21010

Distribution limited to US Government agencies only because of test and evaluation; January 1982. Other requests for this document must be referred to Commander/Director, Chemical Systems Laboratory, ATTN: DRDAR-CLJ-R, Aberdeen Proving Ground, Maryland 21010.

nd highly visible color for 50 to 90 seconds. The data from the yellow-smoke-formulation studies are resented in table A-1, appendix A; the data from green-smoke-formulation studies are presented in able A-2, appendix A. The results of the preliminary formulation studies are summarized as follows:

(a) Sulfur and sodium bicarbonate were unacceptable as fuel and coolant, respectively. ellow-smoke grenades made with sulfur or sodium bicarbonate (or both) burned unevenly and the noke color was faded. Green-smoke grenades made with sulfur burned unevenly and a few exploded.

(b) Powdered sugar (sucrose) and magnesium carbonate were the best fuel-coolant combination tested. Excellent smoke clouds of bright yellow and green colors were produced. The optimum rmulations are shown in table 2.

Table 2. Improved Yellow- and Green-Smoke Mix Formulations for M18 Grenade

Chemical ingredient	Specification	Yellow Smoke XII		Green Smoke VII	
		Parts by weight	Tolerance	Parts by weight	Tolerance
ye, Solvent Yellow 33	DOD-D-51485	42.0	±1.0	12.5	±0.5
ye, Solvent Green 3	MIL-D-003277	–	–	29.5	±1.0
otassium chlorate	MIL-P-150, Grade B, Class 7	22.0	±1.5	24.5	±1.5
agnesium carbonate	MIL-M-11361, Grade B	21.0	±2.0	17.0	±2.0
owdered sugar	JJJ-S-791, Type I, Class (d)	15.0	±1.0	16.5	±1.0

OTE: All proportions of potassium chlorate and sugar to other ingredients may be varied to yield the required burn time, but the ratio of potassium chlorate to sugar must be maintained in the proportions specified in the table.

(c) The oxidizer-fuel ratio (potassium chlorate-sugar) which gave the best grenade rformance was determined to be 1.5:1. This is consistent with common practice according to llern.[6]

(d) Lactose was not acceptable as a fuel. Although lactose was preferred over sucrose, as e former is nonhygroscopic, yellow-smoke grenades incorporating lactose burned unevenly and several reen-smoke grenades exploded.

(e) Dextrin is not recommended as a Solvent Yellow 33 diluent, although its use is allowed the other standard military smoke dyes. The presence of dextrin in the improved smoke mixes was ound to have a significant effect on grenade burn time. Although smoke mixes were successfully rmulated which contained 2 or 4 percent dextrin, the potential for producibility problems exists here the dextrin content varies from lot to lot of dye.

092

0924-CCA:se
11345

2 0 JAN 1984

From: 092
To: 505

Subj: Variance for Building 198 Test Area

Ref: (a) 0924 Memo of 11 August 1983, Subj: Variance for Function Testing at Area Adjacent to Building 198

1. In order to obtain a variance from the State for testing of newly developed items at Building 198, the information outlined in reference (a) should be submitted to 0924 at the earliest possible date. This data should be as specific as possible.

2. For additional information concerning this subject matter, contact Cathy Andrews, 0924, extension 1114/1132.

J. D. FARIS

Copy to:
505 (F. Montgomery)

0924

0924-JH:ae
11346
11 AUG 1983

MEMORANDUM

From: 0924
To: 505 (F. Montgomery)

Subj: Variance for function testing at test area adjacent to Building 198

1. The Environmental Protection Branch Manager (Code 0924) has determined from reviewing the State Air Pollution Control laws that a variance is required for function testing at an area adjacent to Building 198.

2. It is requested that the following information be submitted to Code 0924 for those units/items to be tested in the next year:

a. Name of item to be tested

b. Number of units per each item to be tested

c. Weight and composition of each unit

d. Length of burn/test

3. This information will be submitted by Code 0924 to the Air Pollution Control Board, Indiana State Board of Health to obtain the necessary variance for testing.

4. If you have any questions regarding this Memo, please contact Code 09245, Jim Hunsicker, extension 3114.

C. C. ANDREWS
Manager
Environmental Protection Branch

0924-CCA:ae
11346

0 6 FEB 1984

MEMORANDUM

From: 09
To: 50

Subj: Testing of Smoke Candles at Building 198 Dye Burst Test Facility

Ref: (a) 50 Memo of 25 Jan 1984; Subj: Possiblity of Testing Smoke Candles at Building 198 Dye Test Area
(b) 0924 Memo of 11 Aug 1983; Subj: Variance for Function Testing at Area Adjacent to Building 198
(c) 0924 Memo of 20 Jan 1984; Subj: Variance for Building 198 Test Area

1. Reference (a) requests the usage of the 2.7 - 5" warhead dye color burst test area northeast of Building 195 for the testing of smoke candles. The use of this site will create additional environmental and hazardous waste disposal problems. The dye burst area was constructed with a sand floor to facilitate disposal of dye debris and a drainage collection basin to control contaminated run-off. Currently, rounds with known compositions and relatively insoluble components are being tested at the color burst area. Adverse environmental conditions are thus limited and disposal of contaminated materials is easily facilitated.

2. The testing of newly developed smoke candles at the dye burst test facility will result in the spread of an unpredictable myriad of troublesome air borne pollutants to a new area, resulting in additional contamination of land and water resources. In references (b) and (c) 0924 requested specific information on the types and compositions of smoke items to be tested in order to obtain a variance from the State of Indiana. This information has not yet been received. A representative of 505 verbally informed 0924 that these compositions are varied and are not easily predictable, since they result from continuing research and development work. If the dye burst test facility is used for a variety of pyrotechnics items, possible material compatability problems and difficulties with the disposal of sand and contaminated water from the drainage of the area will also result. This will contribute to more work stoppages than would be experienced by wind factors described in reference (a).

3. Because of the problems described above, it is recommended that the test areas remain separate and distinct and used for their original intended purposes.

J. D. FARIS

B-198 Dye Test Area

John Laswell & Dave McNulty are proposing to set off a M18 Smoke Hand Grenade simultaneous with the dye test units for comparision of smoke/dye cloud produced.

Proposing to test one M18 per dye test unit with a maximum of 10 units of each per day being tested.

7/7/83.

Discussed proposal with Cathy and what effects this new testing could have on area. Cathy was in agreement to go ahead with testing and that I should be on-site individual testing starts to see how far smoke drifts.

Contacted Dave McNulty asking him to go ahead an prepare test procedure for test smoke grenade simultaneous with dye unit. Also ask Dave to look at wind factor when testing smoke grenade.

M18 SMOKE HAND GRENADE

(GREEN, YELLOW, RED AND VIOLET)

1. General information: This grenade is designed to be used by surface or air craft for daytime signaling purposes.

   a. Can produce either a green, yellow, red or violet smoke.

   b. Burn time: 50-90 seconds

   c. Size: 4.5"H X 2.5"D

2. Number to be function tested:

   a. Approximately 315 grenades each of the yellow, red and green smoke will be tested at Pyro Test Area. Only 128 grenades containing violet smoke are to be tested.

3. Total weight of smoke in grenade:

   a. Each grenade contains 11.5 ounces of either red, green, yellow, or violet smoke mixture.

   b. Smoke Composition (Percent by Weight)

(1) Violet

(a) Dye Mixture *	42	= 4.8 oz.
Dye Disperse Red 9	20.0	
1, 4-diamino -2, 3-dehydroanthracenquinone	80.0	
(b) Potassium Chlorate	25.0	
(c) Sulfur	9.0	
(d) Sodium Bicarbonate	24.0	

(2) Yellow Smoke

(a) Dye Mixture	38.5	= 4.43 oz.
Dye, Benzanthrone	65.0	
Dye, Vat Yellow 4	35.0	
(b) Potassium Chlorate	20.0	
(c) Sulfur	8.5	
(d) Sodium Bicarbonate	33.0	

(3) Red Smoke

(a) Dye, Disperse Red 9	40.0	= 4.6 oz.
(b) Potassium Chlorate	26.0	
(c) Sulfur	9.0	
(d) Sodium Bicarbonate	25.0	

M13 SMOKE HAND GRENADE (continued)

	(Percent by Weight)
(4) Green Smoke	53.0 = 6.1 oz.
(a) Dye Mixture	53.0
Dye Solvent Green 3	41.6
Dye, Benzanthrone	20.7
Dye, Vat Yellow 4	37.7
(b) Potassium Chlorate	21.0
(c) Sulfur	8.0
(d) Sodium Bicarbonate	18.0

List of Items Tested to be Tested at Ordnance Test Area, Rocket Range, B-198 R&D Test Area.

ACTIVITY FILES

7103E/461E

LIST OF ITEMS TO BE TESTED AT

ORDNANCE TEST AREA

ROCKET RANGE.

B-198 R & D TEST AREA

IVAN,

These items are tested at Crane, so possibility exist that if defective items show up they may be burned at Ammunition Burning Grounds or detonated at Demolition Area. This enclosure also includes a copy/list of chemicals that may be used in experimental pyrotechnic compositions which could be developed at Crane and need to be disposed of.

Enclosure (3)

[redacted]

A. Ordnance Test Area

AN M 7
AN M 8, HC
AN M 37
AN M 38
AN M 39

CXU 3A/B
CXU 4/B

EX 131
EX 132
EX 214 (Seagnat Cartridge)
EX 216 (Seagnat Cartridge)

LUU-2

M 1 A2
M 2 A1
M 3
M 4
M 6
M 7 A2
M 7 A3
M 18
M 25 A1
M 34 WP
M 49 A1
M 67
M 110
M 112 A1
M 117
M 118
M 123 A1
M 125
M 125 A1
M 126 A1
M 127 A1
M 128 A1
M 129 A1
M 138
M 158
M 159
M 257

MJU 2
MJU 8
MJU 18
MJU 21

MK 1 MODS
MK 1 MOD 0
MK 1 MOD 1
MK 2 Frag Grenade
MK 2 MOD 0
MK 2 MOD 1
MK 3
MK 4 MOD 3
MK 5 MOD 4
MK 6 MOD 0
MK 6 MOD 3
MK 6 MOD 4
MK 13 MOD 0
MK 18
MK 21
MK 22
MK 23
MK 23 MOD 0
MK 24
MK 24 MOD 0
MK 25 MOD 2
MK 25 MOD 3
MK 26
MK 28 MOD 3
MK 33 MOD 1 (ZUNI)
MK 38
MK 39-0 Booster
MK 45
MK 45 MOD 0
MK 46 MOD 1C
MK 46 MOD 2
MK 47
MK 50 MOD 0
MK 58 MOD 0
MK 58 MOD 1
MK 58 MOD 2
MK 66
MK 67 MOD 2
MK 75 MOD 0
MK 80
MK 89
MK 91
MK 99
MK 115
MK 116
MK 117 MOD 0
MK 117 MOD 1
MK 118 Rockeye Bomblet
MK 118 MOD 0
MK 118 MOD 1
MK 120
MK 121
MK 124 MOD 0
MK 138 MOD 1
MK 171 Chaff Cartridge (RBOC)
MK 171 w/RP Load
MK 182 W/RP Load
MK 182-1 SRBOC
MK 186 Torch
MK 193 MOD 1 Practice Chaff
MK 379 MOD 1 AUR
MK 407 MOD 1 PD

PAMAM MK 2

SDU-28A

A. Ordnance Test Area (continued)

Active Electronic Buoy
Airboc Cartridge
Chaff Buoy Cartridge
Counter Arm Decoy
Demolition Charge Explosive Sheet
Emergency Incendiary
  Document Destroyer
Flexible Linear Demolition
  Shaped Charge
High Explosive Cutter
Lightweight Detonation Cord
Liquid Pyroforic
Metallic-Phosphide
Minuteman Batteries
Minuteman Lithium Battery Cook-Off
Pilofilm Reinforced Det. Cord
Pyroforic
Seagnat Cartridges
Ship Launched Electronic Decoy
2.75-inch Rocket
5.00-inch Rocket
Wirebound Det. Cord

B. Rocket Range

AN-M 7 Smoke Pot

EX 131
EX 132

LUU 2

M 18
M 23
M 125
M 127 A1

MJU 2
MJU 8
MJU 20
MJU 21

MK 2 MOD 1
MK 6 MOD 0
MK 6 MOD 3
MK 6 MOD 4
MK 7
MK 13 MOD 0
MK 18 MOD 0
MK 25
MK 33 MOD 1
MK 38
MK 40 MODS
MK 45
MK 46
MK 46 MOD 2
MK 47
MK 58 MODS
MK 67 MOD 2
M 74
MK 99
MK 115
MK 116
MK 120
MK 121
MK 124
MK 125
MK 186 Torch

PAMAM MK-2

Advanced Marine Location Marker
2.75-inch Rocket
5.00-inch Rocket

C. B-198 R & D Test Area

Compositions of items tested at Rocket Range
Developmental pyrotechnic formulations
Decoy flares
Illuminating flares
Dye formulations

LIST OF CHEMICALS USED IN EXPERIMENTAL PYROTECHNIC COMPOSITIONS

1,2 napthaquinone
1,2 methoxyphonolazo-2-napthol
1,4 diamino-2,3 dihydroanthraquinone
1,4 dimethylaminoanthraquinone
1,4 diparatoluidnoanthraquinone
1,5 dichloro-9,10-bis (phenylethynyl) anthracene
1,8 dichloro-9,10-bis (phenylethynyl) anthracene
1-chloro 9,10 bis (phenylethynyl) anthracene
2- (4- dimethylaminoazophenylazonaphthalene)
2-chloro-9,10-bis (phenylethynyl) anthracene
4 dimethylaminoazobenzene
9, 10 bis (phenylethynyl) anthracene
Acid fast violet B.G.
Acid fuchsia
Acrawax
Acrylonitrile butadiene-styrene
Aluminum
Aluminum oxide
Amaranth
Aminoanthraquinone
Ammonium perchlorate
Ammonium nitrate
Ammonium perchlorate
Ammonium thiocyanate
Anthracene
Anthraquinone
Antimony
Antimony oxide
Antimony trioxide
Asphaltic compound
Barium carbonate
Barium chromate
Barium nitrate
Barium oxalate
Barium peroxide
Barium stearate
Benzanthrone
Benzo (d,e,f) phenanthrene
Benzoic acid
Benzoyl peroxide
Bismuth
Bismuth carbonate
Bismuth nitrate
Bismuth sub-nitrate
Bismuth trioxide
Black powder
Borane
Boric anhydride
Boron
Boron (amorphous)

[redacted]

[redacted]

RODUCED AT GOVERNMENT EXPENSE

LIST OF CHEMICALS USED IN EXPERIMENTAL PYROTECHNIC COMPOSITIONS

Boron carbide
Boron nitride
Butadiene-acrylonitrile
Cadmium
Cadmium carbonate
Cadmium nitrate
Cadmium oxide
Cadmium perchlorate
Calcium
Calcium carbide
Calcium carbonate
Calcium fluoride
Calcium hydride
Calcium nitrate
Calcium oxalate
Calcium oxide
Calcium phosphide
Calcium resinate
Calcium silicide
Calcium stearate
Calcium sulfate
Calcium sulfide
Camphor
Carbon
Carbon fiber
Carbon lampblack
Cellulose acetate
Cellulose acetate butyrate
Cellulose acetate propionate
Cellulose, nitrate - camphor
Cerous nitrate
Cerous perchlorate
Charcoal - activated
Charcoal - graphite
Charcoal - wood
Chlorinated polyether
Chromic oxide
Chromium
Chromium oxide
Chromium trifluoride
Chromium trioxide
Citric acid
Cobalt
Cobalt chromate
Cobalt naphthenate
Cobalt nitrate
Cobalt oxide
Copolymer of chlorotrifluoroethylene and vinylidene fluoride
Copolymer of hexafluoropropylene and vinylidene fluoride

RODUCED AT GOVERNMENT EXPENSE

LIST OF CHEMICALS USED IN EXPERIMENTAL PYROTECHNIC COMPOSITIONS

Copper carbonate
Copper chromate
Copper fluoride
Copper hydroxide
Copper metal
Cupric oxide
Cuprous oxide
Cycolac
Decarborane
Detasheet
Dextrin
Dextrose
Diatomaceous earth
Dibutyl phthalate
Diesel fuel, oil
Diisodecyl phthalate
Dimethyl polysiloxane
Dimethylsiloxane
Diocytl adipate
Diocytl phthalate
Diphenylamine
Disperse red 9
Dye amaplast yellow G
Dye anthraquinone
Dye blue dimethylamino-anthraquinone
Dye chrome yellow
Dye green
Dye green-fluorescein
Dye orange
Dye red
Dye scarlet
Dye solvent green
Dye vat yellow - 4
Dye vat yellow - 33
Dye violet
Dye white antraquinone chlor beta
Dye yellow
Dye yellow dibenzpyrene quinone
Epichlorohydrin
Epoxy adhesives
Epsom salts
Ethyl cellulose
Ethyl centralite
Ferric citrate
Ferric linoleate
Ferric oxide
Ferrous oxide
Fluoranthene
Fluorescein disodium salt

PRODUCED AT GOVERNMENT EXPENSE

LIST OF CHEMICALS USED IN EXPERIMENTAL PYROTECHNIC COMPOSITIONS

Gallic acid
Gallium oxide
Glucose
Glycerine
Graphite
Graphite fiber
Guanidine nitrate
Gum arabic
Hexachlorobenzene
Hexahydro-1,3,5-trinitro-s-triazine (RDX)
Hexamethylenetetramine
Hydroquinone
Hydroxyl terminated polybutadiene
Indanthrene golden yellow
Indium phosphide
Indium oxide
Iodine pentoxide
Iodoform
Iron
Iron linoleate
Iron carbonyl
Iron octoate
Iron oxide
Iron stearate
Lactose
Lead
Lead carbonate
Lead sulfide
Lead azide
Lead chromate
Lead dioxide
Lead fluoroborate
Lead iodate
Lead nitrate
Lead oxide
Lead peroxide
Lead styphnate
Linseed oil
Lithium (pellets)
Lithium aluminum hydride
Lithium carbonate
Lithium perchlorate
Magnesium carbide
Magnesium powder
Magnesium carbonate
Magnesium hydride
Magnesium hydroxide
Magnesium oxide
Magnesium phosphide

RODUCED AT GOVERNMENT EXPENSE

LIST OF CHEMICALS USED IN EXPERIMENTAL PYROTECHNIC COMPOSITIONS

Magnesium silicate
Magnesium silicide
Manganese
Manganese carbonate
Manganese dioxide
Manganese oxide
Mannitol
Mannitol hexanitrate
Mercury fulminate
Methyaminoanthraquinone
Methyl ethyl ketone peroxide
Mineral oil
Molybdenum
Molybdenum dioxide
Molybdenum disulfide
Molybdenum silicide
Nickel - black oxide
Nickel powder
Nickel carbonate
Nitrocellulose
Nitroguanidine
Nylon
Octahydro-1,3,5,7-tetranitro-s-tetrazocine (HMX)
Ortho amino azotoluene
Oxalic acid
Pentaerythrite tetranitrate
Pentaerythritol diacrylate dinitrate
Pentaerythritol tetranitrate (PETN)
Phenanthrene
Phenol-formaldehyde
Phosphorous pentasulfide
Phosphorus, red
Platinum
Polyamide resins
Polybenzimidazole
Polycarbonate
Polyester resins
Polyethersulfone
Polyethylene
Polyimide resins
Polymethyl methacrylate
Polymethylene polyaniline
Polymethylene polyphenylisocyanate
Polyoxyethylene glycol
Polyoxymethyelene acetal resin
Polypropylene glycol (diol)
Polypropylene, tenite
Polystyrene

RODUCED AT GOVERNMENT EXPENSE

LIST OF CHEMICALS USED IN EXPERIMENTAL PYROTECHNIC COMPOSITIONS

Polytetrafluoroethylene
Polyurethane resins
Polyvinyl acetate
Polyvinyl alcohol
Polyvinyl chloride
Polyvinyl fluoride
Polyvinylformate
Polyvinylidene chloride
Polyvinylidene chloride/vinyl chloride
Potassium
Potassium iodate
Potassium perchlorate
Potassium bicarbonate
Potassium borohydride
Potassium carbonate
Potassium chlorate
Potassium chromate
Potassium dichromate
Potassium hydride
Potassium iodate
Potassium iodide
Potassium naphthalide
Potassium nitrate
Potassium nitrite
Potassium oxalate
Potassium perchlorate
Potassium permanganate
Potassium phosphide
Potassium superoxide
Potassium sulfate
Potassium thiocyanate
Resorcinol
Rhodamine "B"
Rhodium
Rosin, powdered
Rubidium nitrate
Rubidium perchlorate
Salicylic acid
Selenium
Selenium dioxide
Silane
Silicon powder
Silicon boride
Silicon carbide
Silicon dioxide
Silicone rubber
Silver
Silver iodate

RODUCED AT GOVERNMENT EXPENSE

LIST OF CHEMICALS USED IN EXPERIMENTAL PYROTECHNIC COMPOSITIONS

Silver iodide
Silver nitrate
Silver oxide
Silver perchlorate
Smokeless powder (single and double base)
Sodium
Sodium oxalate
Sodium perchlorate
Sodium azide
Sodium bicarbonate
Sodium borate
Sodium borohydride
Sodium carbonate
Sodium chloride
Sodium chromate
Sodium dichromate
Sodium fluoride
Sodium fluorosilicate
Sodium hydride
Sodium iodate
Sodium iodide
Sodium nitrate
Sodium nitrite
Sodium oxalate
Sodium perborate
Sodium perchlorate
Sodium periodate
Sodium peroxide
Sodium phosphate
Sodium pyrophosphate
Stannic oxide
Stannous octoate
Stannous oxide
Strontium carbonate
Strontium chloride
Strontium dioxide
Strontium iodate
Strontium nitrate
Strontium oxalate
Strontium oxide
Strontium peroxide
Strontium stearate
Styrene/maleic anhydride copolymer
Sucrose
Sulfur
Talc
Tantalum pentoxide
Teflon fluorocarbon resin
Tellurium

PRODUCED AT GOVERNMENT EXPENSE

LIST OF CHEMICALS USED IN EXPERIMENTAL PYROTECHNIC COMPOSITIONS

Tellurium dioxide
Tenite polypropylene
Tetrachloro-9,10-bis (phenylethynyl) anthracene
Tetrahydro naphthalene
Tetranitrocarbazole
Thiourea
Thorium nitrate
Tin
Titanic oxide
Titanium
Titanium tetrachloride
Titanium dioxide
Titanium silicide
Titanium tetrachloride
Tri n-propyl aluminum
Tri n-hexyl aluminum
Tri phenyl aluminum
Tricresyl phosphate
Triethyl aluminum
Trimethyl aluminum
Trinitrophenylmethylnitramine (Tetryl)
Trinitrotoluene (TNT)
Triphenyl phosphate
Tungsten
Tungstic oxide
Uranium oxide
Uranyl nitrate
Urea
Urea formaldehyde
Urethanes
Vanadium oxytrichloride
Vanadium pentoxide
Zinc
Zinc oxide
Zinc borate
Zinc carbonate
Zinc chromate
Zinc oxide
Zinc stearate
Zinc sulfide
Zirconium
Zirconium carbide
Zirconium oxide
Zirconium hydride

REPRODUCED AT GOVERNMENT EXPENSE

Appendix D: Ordnance Technical Data Sheets

Ordnance Technical Data Sheet
U.S. Bomb Unit, Dummy, BDU-28/B

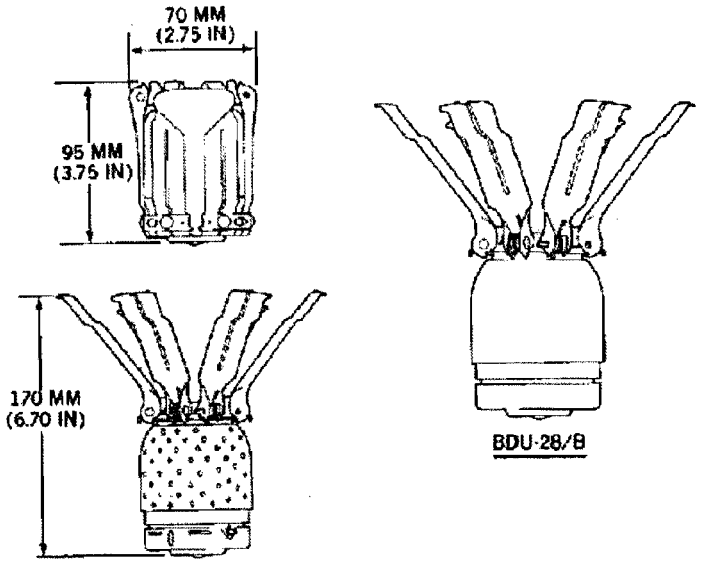

Nomenclature: BDU-28/B
Ordnance Family: Submunitions
DODIC: Not provided
Filler: N/A
Filler weight: N/A
Item weight: 785 g
Diameter: 70.00 mm
Length: 95.00 mm
Maximum Range: N/A
Fuze:

Usage: The BDU-28/B is a small, Drag-vane stabilized, inert dummy bomb used for training ground handling and loading crews

Description: The body of the BDU-28/B is painted the same red color as the bdu-27/B but has no circumferential band. The vanes are anodized greenish-gold and the endcap is anodized blue. Markings are stenciled in black on the end cap.

Reference: ORDATA Online, MIDAS.

Ordnance Technical Data Sheet
Octol

Octol: Better known as 70/30 or 75/25 Octol. A mixture of HMX (70 or 75 percent), and TNT (30 or 25 percent). It is a solid, buff colored, castable explosive used in HE shells and as the filler for bombs.

Reference: ORDATA Online

Ordnance Technical Data Sheet
Rocket Motor

ROCKET MOTOR: (M447)

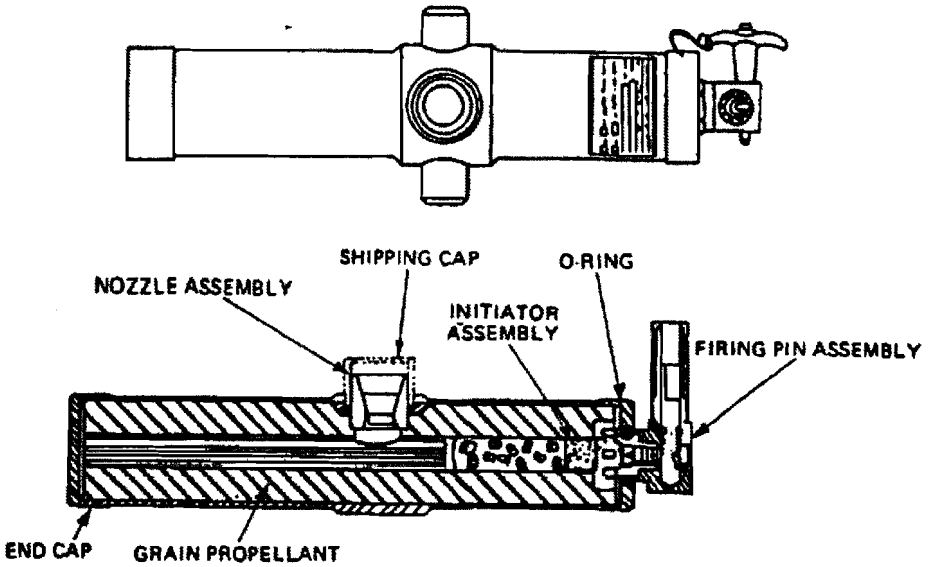

Nomenclature:	Rocket Motor
Ordnance Family:	Propellant Actuated Device (PAD)
DODIC:	M447
Filler:	High-density carboxy terminated polybutadiene, N-53
Filler weight:	2.56 lb (17920 grains)
Item weight:	6.36 lb (2.9 kg)
Diameter:	4.202 in. (10.67 cm)
Length:	13.3 in. (33.78 cm)
Fuze:	

Usage: To provide stabilization and improved trajectories of the seat escape system.

Description: The M119 tip-off compensation rocket motor is designed for use in the Grumman OV-1 Mohawk airplane on the MD-S5 seat system. The unit provides sufficient energy to stabilize the ejection seat in the correct attitude to insure drogue chute deployment in the optimum direction.

Reference: TM 43-0001-39, TECHNICAL MANUAL ARMY DATA SHEETS FOR CARTRIDGES, CARTRIDGE ACTUATED DEVICES AND PROPELLANT ACTUATED DEVICES (FSC 1377), December 1991

Ordnance Technical Data Sheet
20 mm Cartridge

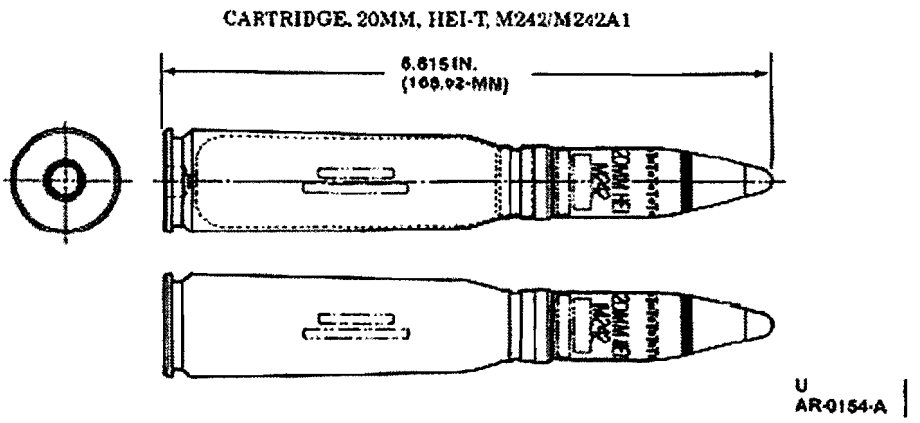

Nomenclature:	Cartridge, 20 MM, HEI-T
Ordnance Family:	Pyrotechnic/Smoke
DODIC:	1305-A659
Filler:	Red phosphorus composition
Filler weight:	
Item weight:	5.806 kg (12.8 Lbs)
Diameter:	124.5 mm (4.9in)
Length:	6.615 In.
Fuze:	Saltwater activated battery

Usage: Mark 58 is designed for use in air/sea rescue operations, as a target marker, and as a surface wind indicator. It features day or night operation, and can be launched by hand or from aircraft.

Description: Consists of a cylindrical tin can approximately 21.78 inches long and 5.03 inches in diameter. The can contains two pyrotechnic candles of a red phosphorus composition. The ignition end of the marker has three holes-two for smoke and flame emission and one for water to enter the Mk 72 Mod 1 seawater-activated battery. Adhesive foil disks hermetically seal the two emission holes. A reinforced adhesive foil strip with a rectangular pull ring hermetically seals the battery cavity hole

Reference: ORDATA Online, NAVSEA SWO050-AB-MMA-010, NAVAIR 11-15-7

Ordnance Technical Data Sheet
M21, Cartridge Actuated Cutter

CUTTER. CARTRIDGE ACTUATED: M21 (M500)

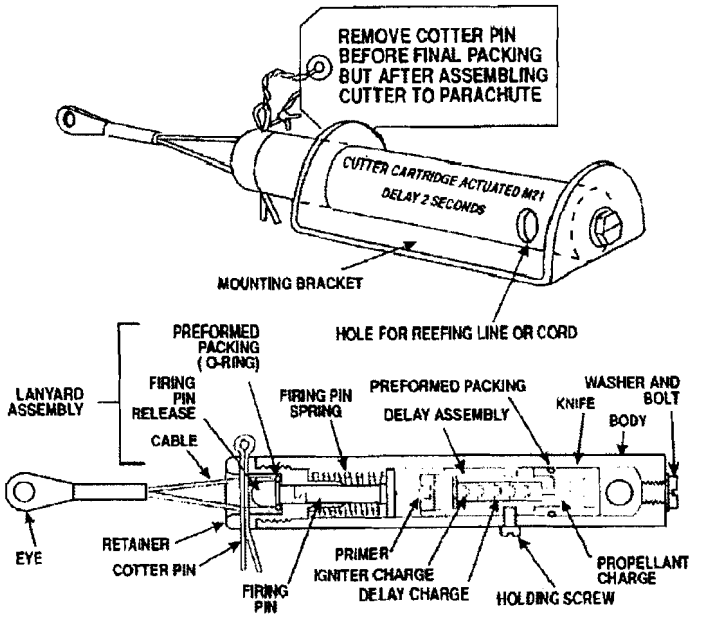

Nomenclature:	M21, Cartridge Actuated Cutter
Ordnance Family:	Cartridge Actuated Device (CAD)
DODIC:	M500
Filler:	Bullseye black powder
Filler weight:	0.0040 lb (28 grains)
Item weight:	.7 lb
Diameter:	0.75 in. (1.905 cm)
Length:	6.0 in. (15.24 cm)
Fuze:	Percussion

Usage: The M21 reefing line cutter is a cartridge actuated, one shot, disposable mechanical unit with the cartridge sealed internally, Major components consist of case, firing pin assembly, lanyard, knife assembly delay assembly and cotter pin.

Description: The M21 reefing line cutter is a cartridge actuated, one shot, disposable mechanical unit with the cartridge sealed internally. Major components consist of case, firing pin assembly, lanyard, knife assembly, delay assembly and cotter pin.

Reference: TM 43-0001-39, TECHNICAL MANUAL ARMY DATA SHEETS FOR CARTRIDGES, CARTRIDGE ACTUATED DEVICES AND PROPELLANT ACTUATED DEVICES (FSC 1377), December 1991

Ordnance Technical Data Sheet

U.S. FLARE, AIRCRAFT, PARACHUTE, MK 24 MOD 1, 2, 2A, 3, & 4

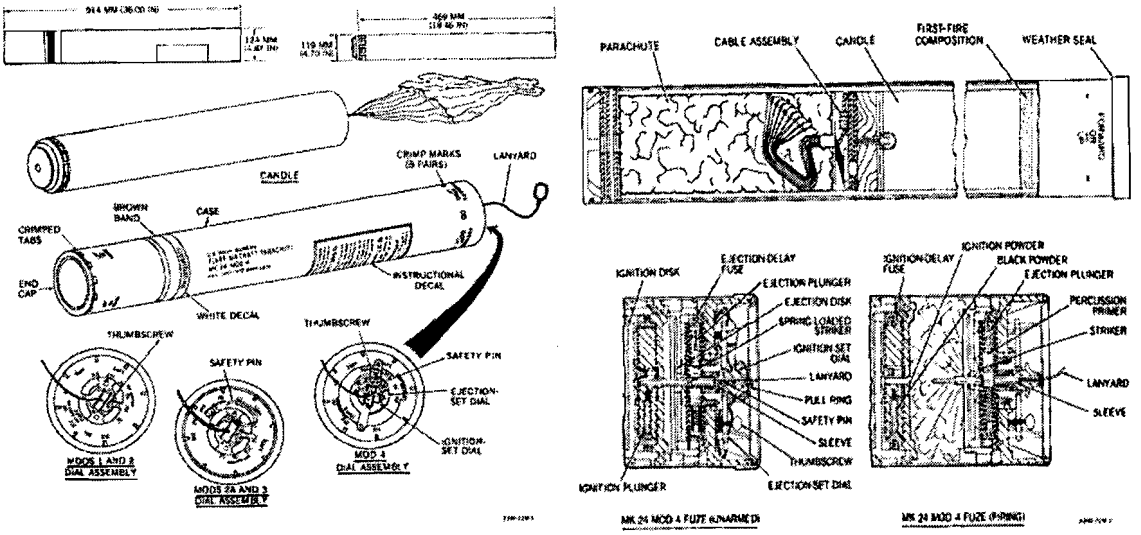

Nomenclature:	U.S. FLARE, PARACHUTE, MK 24 MOD 1, 2, 2A, 3, & 4
Ordnance Family:	Pyrotechnics And Flares
DODIC:	L421
Filler:	Illuminant Composition
Filler weight:	7.30 kg
Item weight:	12.20 kg
Diameter:	124.00 mm
Length:	914.00 mm
Maximum Range:	N/A
Fuze:	

Usage: The figure shows the appearance and dimensions of the Mk 24 aircraft flare. These are air-launched, parachute-retarded flares used to provide intense illumination of large areas

Description: The flare case is unpainted. It is marked in black with nomenclature, national stock number, lot number, loading date, loading facility, location of suspension bands, and fuze setting and safing information.

Reference: ORDATA Online, Midas.

Ordnance Technical Data Sheet
MK 58 Marine Marker

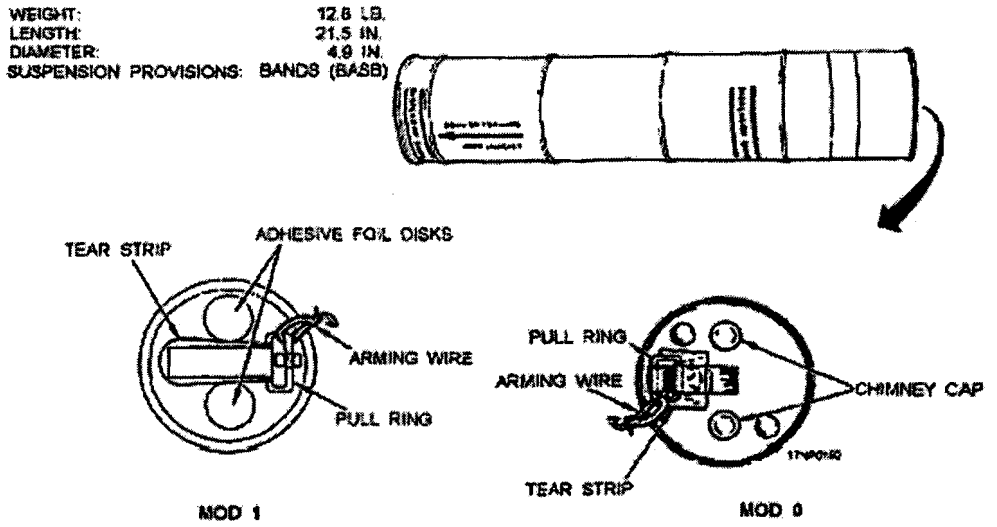

Nomenclature: MK 58 Marine Marker
Ordnance Family: Pyrotechnic/Smoke
DODIC:
Filler: Red phosphorus composition
Filler weight:
Item weight: 5.806 kg (12.8 Lbs)
Diameter: 124.5 mm (4.9in)
Length: 546.1 mm (21.5in)
Fuze: Saltwater activated battery

Usage: Mark 58 is designed for use in air/sea rescue operations, as a target marker, and as a surface wind indicator. It features day or night operation, and can be launched by hand or from aircraft.

Description: Consists of a cylindrical tin can approximately 21.78 inches long and 5.03 inches in diameter. The can contains two pyrotechnic candles of a red phosphorus composition. The ignition end of the marker has three holes-two for smoke and flame emission and one for water to enter the Mk 72 Mod 1 seawater-activated battery. Adhesive foil disks hermetically seal the two emission holes. A reinforced adhesive foil strip with a rectangular pull ring hermetically seals the battery cavity hole

Reference: ORDATA Online, NAVSEA SWO050-AB-MMA-010, NAVAIR 11-15-7

Ordnance Technical Data Sheet
U.S. Cartridge, 57-MM, Smoke, WP, M308 & M308A1

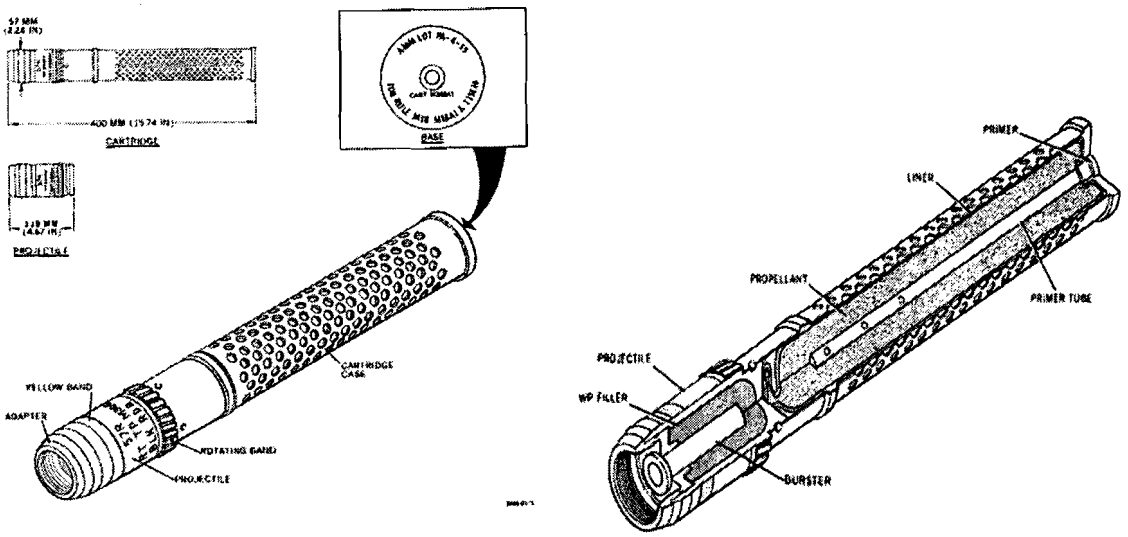

Nomenclature:	57 mm Smoke
Ordnance Family:	Projectile
DODIC:	B590
Filler:	Tetryl
Filler weight:	180.00 g (6.49 oz)
Item weight:	2.50 k (5.512 lbs)
Diameter:	57.00 mm (2.244 in)
Length:	119.00 mm (8.346 in)
Maximum Range:	
Fuze:	PD (point detonating)

Usage: These are Army, 57-millimeter recoilless rifle fired, spin-stabilized white phosphorus projectiles used primarily for screening and spotting.

Description: The projectiles are either gray with one yellow band and yellow markings or light green with one yellow band and light red markings. Identification markings are stenciled on the projectile.

Reference: ORDATA Online, MIDAS.

Ordnance Technical Data Sheet
Grenade, Hand Smoke M18

GRENADE, HAND: SMOKE (RED), M18

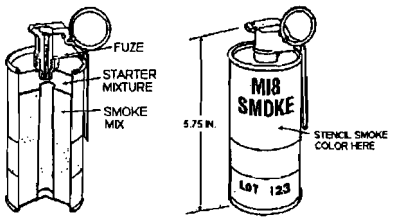

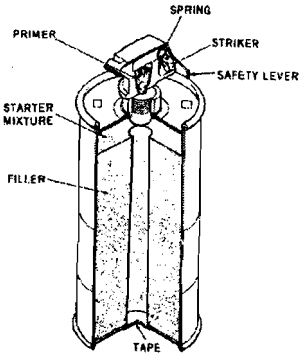

Nomenclature: Grenade Hand Smoke M18
Ordnance Family: Pyrotechnic
DODIC: G945
Filler: Smoke Mixture
Filler weight: ± 326.03 g
Item weight: 536 g (19 oz)
Diameter: 64 mm
Length: 146 mm (5.75in)
Maximum Range: N/A
Fuze:

Usage: The M18 is a hand-thrown, smoke grenade which emits red or yellow, or violet smoke for 50 to 90 seconds. The M18 may also emit green smoke. These grenades use a pyrotechnic, delay-igniting fuze which provides an approximate 2-second delay.

Description: The M18 grenade may be olive drab with a light green band around the lower body and nomenclature and smoke color stenciled in light green, or light green with stenciled the color of the smoke. The top of the grenade is painted the color of the smoke.

Reference: ORDATA Online

Ordnance Technical Data Sheet
Submarine Float Signal Mk2 Mod 2

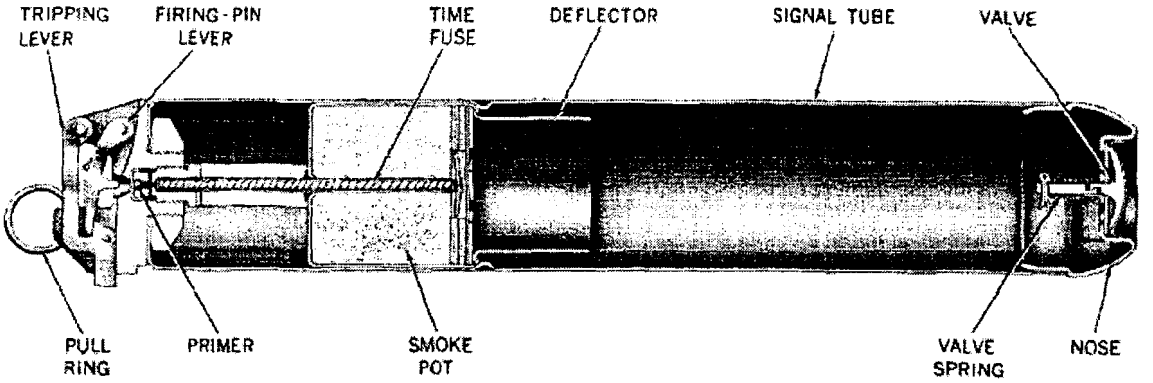

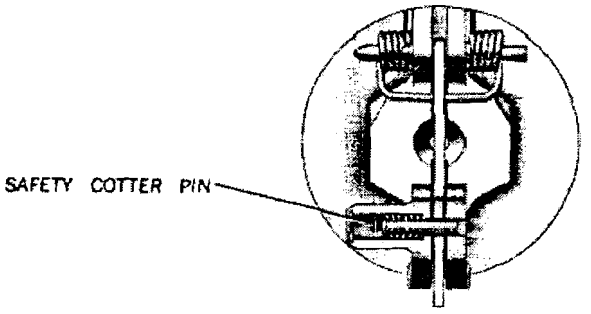

Nomenclature:	Submarine Float Signal Mk2 Mod 2
Ordnance Family:	Pyrotechnics
DODIC:	Unknown
Filler:	Smoke Composition
Filler weight:	Unknown
Item weight:	1.81 k (4 lbs)
Diameter:	76.20 mm (3 in)
Length:	472.70 mm (18.61 in)
Maximum Range:	N/A
Fuze:	Percussion

Usage: This signaling device was designed to be launched at a maximum depth of 285 feet to produce a red, black, green, or yellow smoke display on the surface.

Description: This signal consists of a cylindrical aluminum tube, which is closed at one end by a rounded nose cap with concave center into which the blowout valve is fitted. At the base end is the firing mechanism. The case is stenciled to show the color of the smoke emitted.

Reference: OP 2213, Pyrotechnic, Screening, and Dye Marking Devices, 1 Oct 1965, Change 19, 1 Jan 1969

Ordnance Technical Data Sheet
Marine Illumination Signal, Mk 2

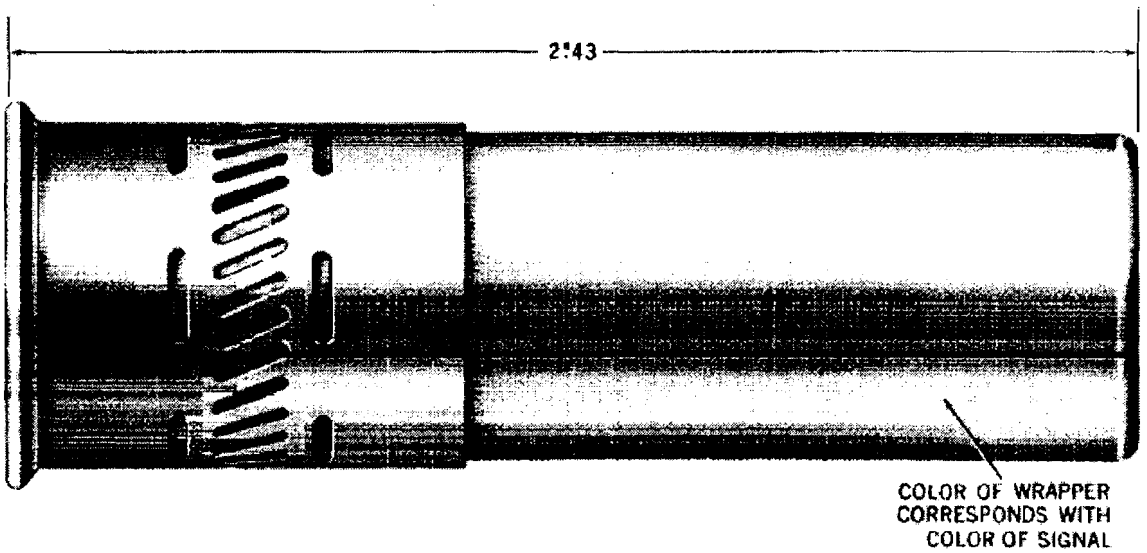

Nomenclature:	Marine Illumination Signal, Mk 2
Ordnance Family:	Pyrotechnics
DODIC:	Unknown
Filler:	Smoke Composition
Filler weight:	Unknown
Item weight:	31.18 g (1.1 oz)
Diameter:	22.35 mm (.88 in)
Length:	61.72 mm (2.43 in)
Maximum Range:	N/A
Fuze:	Percussion

Usage: This device is fired from Pyrotechnic Pistol, Mk 5 either from the surface or from aircraft, primarily as a distress signal. It. displays a red, green, or white star with a burning time of approximately 6 seconds at an altitude of roughly 200 feet above the point of launching.

Description: This signal resembles a 10-gage shotgun shell. The primer is ignited by the pistol firing pin. The primer ignites a propelling charge, which initiates a quick match wrapped around the star composition and propels the star composition into the air. The quick match ignites the star composition.

Reference: OP 2213, Pyrotechnic, Screening, and Dye Marking Devices, 1 Oct 1965, Change 19, 1 Jan 1969

Ordnance Technical Data Sheet
MK 25 Marine Marker

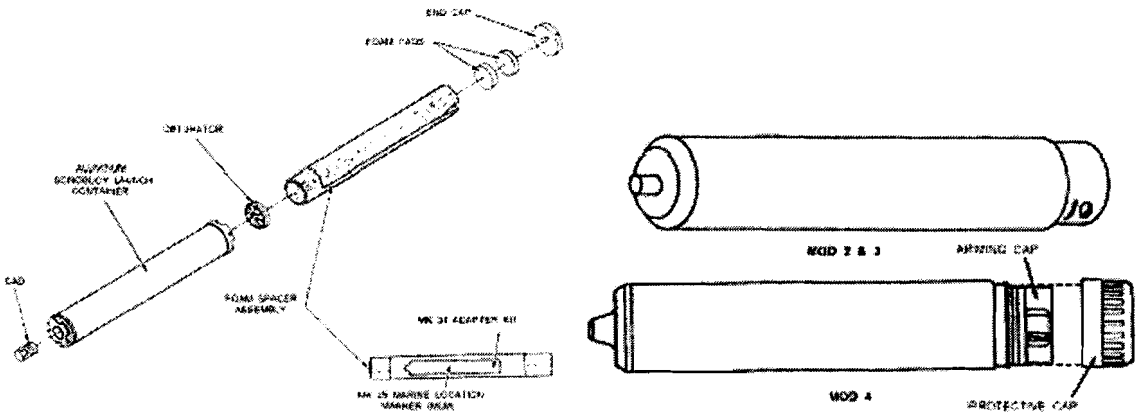

Nomenclature: MK 25 Marine Marker
Ordnance Family: Pyrotechnic/Smoke
DODIC:
Filler: Red Phosphorous pyrotechnic composition
Filler weight:
Item weight: 1.678 kg (3.7 Lbs)
Diameter: 72.33 mm (2.9 in)
Length: 469.9 mm (18.5 in)
Fuze: Saltwater activated battery

Usage: The MK 25 marine location marker is launched from aircraft or surface craft. They provide day or night reference points for marking the course of enemy submarines in antisubmarine warfare operations. The MK 25 is suitable for any type of sea-surface reference point marking that calls for both smoke and flame for a period of 10 to 20 minutes.

Description: Consists of a cylindrical outer tube about 18.5 inches long and 2.9 inches in diameter. A valve assembly is fitted into the projecting chimney at the marker's nose end. The smoke and flame are emitted from this opening. At the opposite end is a heavier aluminum base assembly to which the outer tube is crimped. Within the base assembly is a Mk 72 Mod 0 seawater-activated battery (two batteries in the Mod 2). The battery is shielded from water contact by two plugs fitted into 1/2-inch holes on two opposite sides of the base assembly. The words SAFE and ARMED are stamped into the base rim. A black rubber G-ring circles the base assembly approximately 1/4 inch from the crimp, which holds the outer case.

Reference: ORDATA Online, NAVSEA SWO050-AB-MMA-010, NAVAIR 11-15-7

Ordnance Technical Data Sheet
TNT

Usage: Used as Bursting Charge. High explosive rounds, bombs, mines, and parts of certain rounds and bomb clusters may use TNT as a bursting charge. Small, highly compressed block enclosed in a waterproof fiber container that protects the TNT from crumbling during handling. Used as a blasting Charge. TNT is suitable for all types of blasting. It produces about the same effect as an equal weight of 50- to 60-percent grade dynamite. It is also used as a surround in some amatolloaded ammunition.

Description: TNT (2, 4, 6-trinitrotoluene) is a constituent of such explosives as amatol, pentolite, tetrytol, tritonal, picratol, and Comp B. In a refined form, it is one of the most stable high explosives. In the pure state, it is crystalline and nearly white, resembling a light brown sugar.

(1) TNT is relatively insensitive to shock or friction and can be stored indefinitely. When unconfined and ignited by a flame, it burns slowly and does not explode. It does however, emit a heavy, oily, black smoke. The burning or rapid heating of large quantities in a closed vessel may cause a violent detonation.
(2) TNT is non-hygroscopic and does not form sensitive compounds with metals. When exposed to alkalies it forms unstable compounds that are very sensitive to heat and shock.
(3) The melting point of standard grade 1 TNT is 176°F (80°C). When melted and poured into a projectile or bomb, TNT forms a solid crystalline explosive charge. To assure complete detonation, cast TNT requires a booster charge of compressed tetryl or an explosive of similar brisance. As a military explosive it is very satisfactory. Ammunition loaded with TNT can be stored, handled, and shipped with comparative safety. Exudation. Ammunition loaded with TNT and stored where the temperature is approximately 160°F (71.11°C) or above, may exude an oily brown liquid. The exudate can ooze out around the threads on the projectile nose and the seams of packaged dynamite, forming pools on the floor. It may contain particles of TNT and is highly flammable. Handling and removing is only by qualified personnel.

Reference: Military Demolition Material List

Ordnance Technical Data Sheet
U.S. Warhead, Rocket, 2.75-Inch, Smoke, MK 67 MOD 0

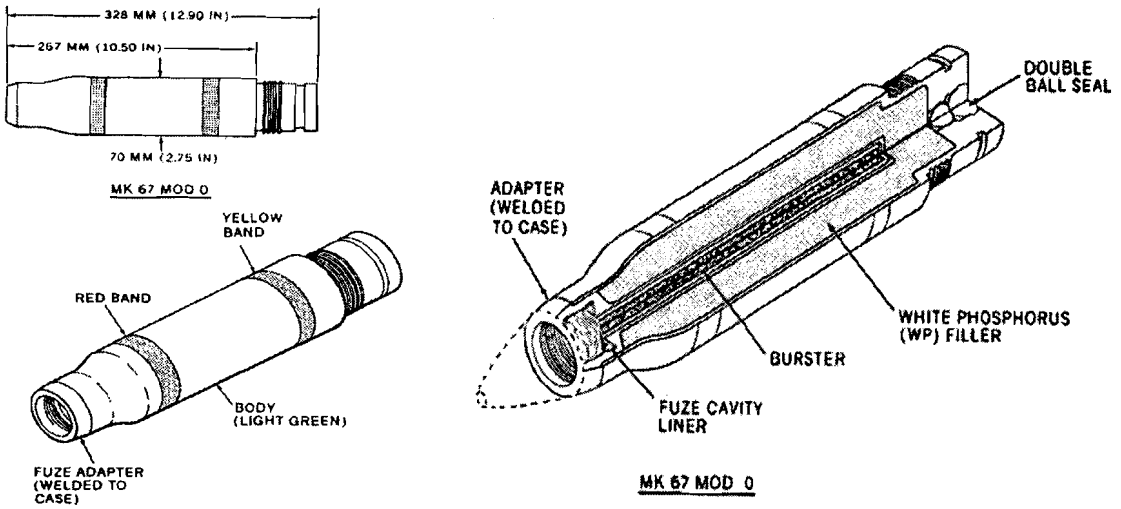

Nomenclature: **U.S. WARHEAD, ROCKET, 2.75-INCH, SMOKE, MK 67 MOD 0 (WP)**
Ordnance Family: Rockets
DODIC: H890
Filler: White or Red Phosphorus
Filler weight: 1.20 kg
Item weight: 2.00 kg
Diameter: 70.00 mm (2.75 in)
Length: 328.00 mm
Maximum Range: N/A
Fuze:

Usage: The figure shows the appearance and dimensions of the Mk 67 Mod 0 and Mod 1 warheads. The Mod 0 is a white phosphorus (WP) smoke warhead used primarily for target marking, or incendiary purposes. The Mod 1 is a red phosphorus (RP) smoke warhead used for signaling or target marking. The weight of the Mod 0 warhead is 2.0 kilograms (4.5 pounds), and the weight of the Mod 1 is 4.0 kilograms (8.9 pounds).

Description: The Mod 0 warhead is painted light green. It has a red band around the forward end and a yellow band around the aft end. The designation, letters WP, and other information are stenciled in red. The Mod 1 warhead is painted light green with only a yellow band around the forward end. The Mod 1 nomenclature, letters RP, and other information are marked in white. Not shown in the figure, are warhead plugs and cover caps used during shipping and storage.

Reference: ORDATA Online, MIDAS.

Ordnance Technical Data Sheet
U.S. Rocket, 2.75-Inch, Warhead, Smoke, WP, M259

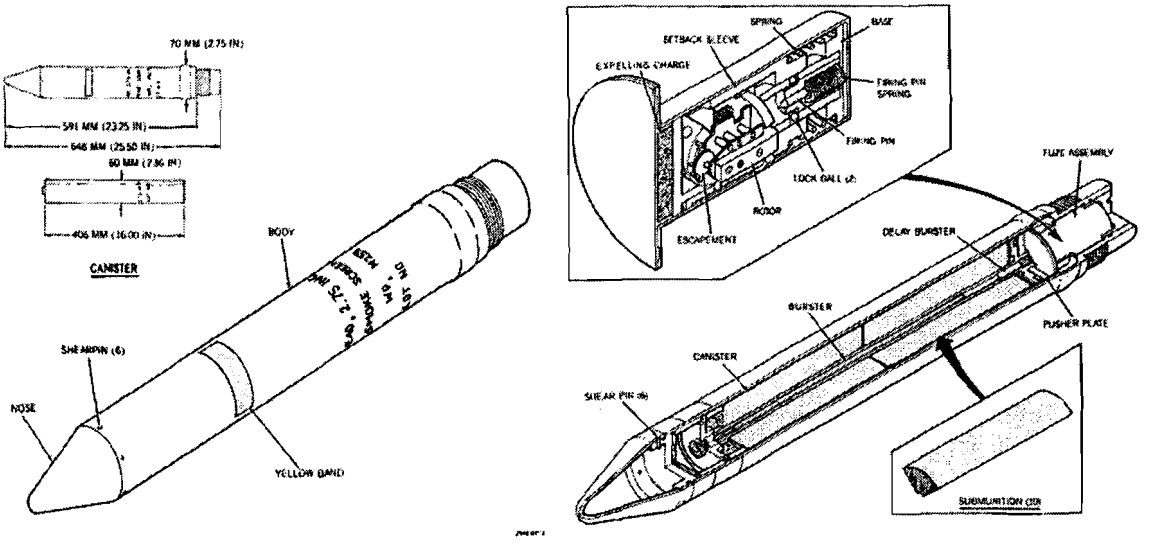

Nomenclature:	**U.S. ROCKET, 2.75-INCH, WARHEAD, SMOKE, WP, M259**
Ordnance Family:	Rockets
DODIC:	H116
Filler:	White Phosphorus
Filler weight:	1.60 kg
Item weight:	4.00 kg (8.8 lbs)
Diameter:	70.00 mm (2.75 in)
Length:	648.00 mm
Maximum Range:	N/A
Fuze:	M446 fuze assembly

Usage: The figure shows the appearance and dimensions of the M259 rocket warhead and canister. This is a nose-ejection white phosphorus (WP) smoke warhead used to provide a protective smokescreen. The M446 fuze assembly is setback armed and diminishing-setback fired. The warhead weighs 4.0 kilograms (8.8 pounds).

Description: The nose is light brown, and the body is light green with a yellow color band. The designation and other information are stenciled in red. The canister is unpainted prescored aluminum, with nomenclature and lot number stenciled in red.

Reference: ORDATA Online, MIDAS

Ordnance Technical Data Sheet
HMX

Description: HMX (Cyclotetramethylene tetranitramine) is almost as powerful as RDX (Hexahydro-Trinitro-Triazine), but is seldom used by itself in military explosive applications. It is usually mixed with a compound, such as TNT (Trinitrotoluene). Variations of such compositions, their properties and uses follow:

(1) Octol 70/30 (70% HMX and 30% TNT)
(2) TOctol 75/25 (75% HMX and 35% TNT)
(3) HTA-3 (49% HMX, 29% TNT, and 22% aluminum)
(4) Both octols and HTA-3 are used for HE filler in projectiles and bombs.

Reference: Military Demolition Material List

Ordnance Technical Data Sheet
HMX

Other names: Cyclotetramethylenetetranitramine, Homocyclonite, 1, 3, 5, 7-Tetranitrotetracycle-octane.
Composition: C4H8N8O8.
State: Crystalline.
Color: White.
Melting point: 529° F. (276° C.).
Solubility: Practically insoluble in water; solubility in other solvents is comparable with that of RDX.
Sensitivity: Slightly more sensitive than RDX.
Detonating temperature: 656.6° F. (347° C.).
Stability: Unstable above melting point — stability of production grade is decreased due to presence of RDX.
Toxicity: Not markedly toxic and generally does not cause dermatitis. If ingested, however, may affect the central nervous system.
Method of loading: Never used pure—always with other materials to desensitize. Usually press loaded except when used with TNT (Octol), then it is cast loaded.
Method of unloading: Cast loaded ordnance may be steamed out.
Use: An ingredient of high explosive mixtures.
Remarks: Beta-HMX is no longer just an impurity in RDX manufacturing, but is used as an explosive itself. It is the most insensitive of the various forms of HMX.

Description: HMX (Cyclotetramethylene tetranitramine) is almost as powerful as RDX (Hexahydro-Trinitro-Triazine), but is seldom used by itself in military explosive applications. It is usually mixed with a compound, such as TNT (Trinitrotoluene). Variations of such compositions, their properties and uses follow:

(1) Octol 70/30 (70% HMX and 30% TNT)
(2) TOctol 75/25 (75% HMX and 35% TNT)
(3) HTA-3 (49% HMX, 29% TNT, and 22% aluminum)
(4) Both octols and HTA-3 are used for HE filler in projectiles and bombs.

Reference: Military Demolition Material List

Ordnance Technical Data Sheet

U.S. Dispenser, Air-Launched, Free-Fall, MK 7 MODS 2, 3, 4, & 6

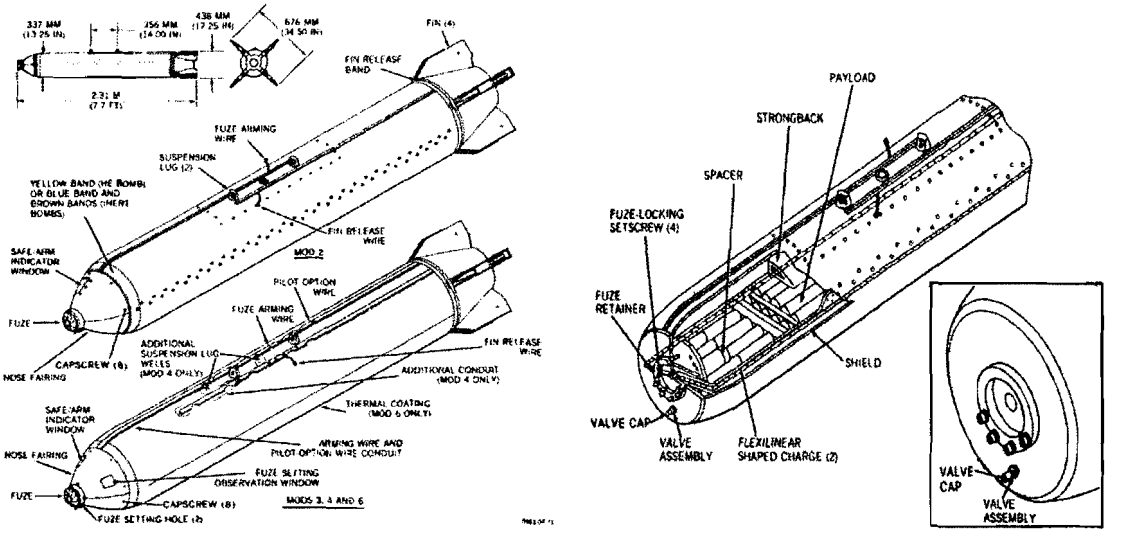

Nomenclature:	U.S. DISPENSER, AIR-LAUNCHED
Ordnance Family:	Bombs/Dispenser
DODIC:	E808
Filler:	Unknown (Submunitions dependent)
Filler weight:	Unknown (Submunitions dependent)
Item weight:	340.20 kg
Diameter:	337.00 mm
Length:	2.31 m
Maximum Range:	N/A
Fuze:	Mechanical time fuze

Usage: These are air-launched, free-fall dispensers, which employ a mechanical time fuze. They contain antimaterial/antipersonnel bombs.

Description: The dispensers are painted white with a yellow band on the forward end of the dispenser. Identifying nomenclature is stenciled in yellow on the side of the dispenser. A Mk 7 Mod 3 dispenser containing explosive-loaded BLU-77/B bombs is also marked with a black lightening bolt painted on each side of the dispenser. Dispensers which are completely inert, including the payload, are painted bronze. There are no color bands. Identifying nomenclature is stenciled in black. Dispensers which have a live dispenser fuze, flexilinear shaped charges (FLSCs), and are loaded with either inert bombs or inert bombs with live fuzes, are painted white. One blue and one brown band are on the forward end of the dispenser. Identifying nomenclature is stenciled in yellow.

Reference: ORDATA Online.

Ordnance Technical Data Sheet
Composition B

Composition B. Composition B (comp B) is a (59/40/1) mixture of RDX, TNT, and beeswax. Its color may vary from dirty white, light yellow to brownish yellow. It is less sensitive than tetryl but more sensitive than TNT. It is intermediate between TNT and RDX with respect to sensitivity and initiation. It is only inferior to tritonal and torpex with respect to blast effect. Composition B is an authorized filling for Army-Navy (AN) standard aircraft bombs, mines, torpedoes, antitank artillery shells (76- and 105-millimeter), demolition charges, and in rockets. Composition B containing 60 percent RDX and 40 percent TNT, exclusive of wax, is known as composition B-2, a nonstandard explosive. Because of its greater sensitivity to impact, composition B-2 is not as suitable as composition B for use in bombs.

Reference: ORDATA Online, MIDAS, Military Demolition Material List

Ordnance Technical Data Sheet

U.S. FLARE, AIRCRAFT, PARACHUTE, MK 24 MOD 1, 2, 2A, 3, & 4

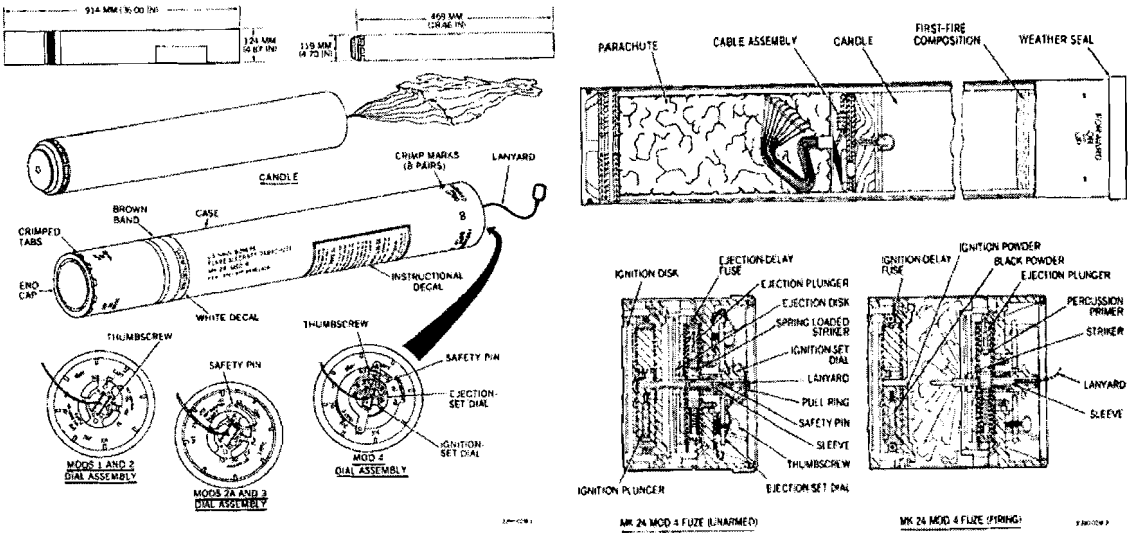

Nomenclature:	U.S. FLARE, PARACHUTE, MK 24 MOD 1, 2, 2A, 3, & 4
Ordnance Family:	Pyrotechnics And Flares
DODIC:	L421
Filler:	Illuminant Composition
Filler weight:	7.30 kg
Item weight:	12.20 kg
Diameter:	124.00 mm
Length:	914.00 mm
Maximum Range:	N/A
Fuze:	

Usage: The figure shows the appearance and dimensions of the Mk 24 aircraft flare. These are air-launched, parachute-retarded flares used to provide intense illumination of large areas

Description: The flare case is unpainted. It is marked in black with nomenclature, national stock number, lot number, loading date, loading facility, location of suspension bands, and fuze setting and safing information.

Reference: ORDATA Online, Midas.

Ordnance Technical Data Sheet
U.S. Bomb Unit, Dummy, BDU-28/B

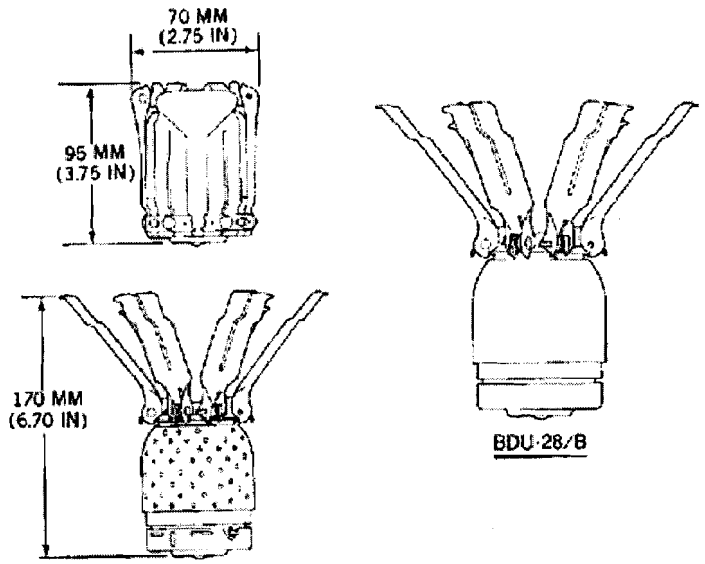

Nomenclature: BDU-28/B
Ordnance Family: Submunitions
DODIC: Not provided
Filler: N/A
Filler weight: N/A
Item weight: 785 g
Diameter: 70.00 mm
Length: 95.00 mm
Maximum Range: N/A
Fuze:

Usage: The BDU-28/B is a small, Drag-vane stabilized, inert dummy bomb used for training ground handling and loading crews

Description: The body of the BDU-28/B is painted the same red color as the bdu-27/B but has no circumferential band. The vanes are anodized greenish-gold and the endcap is anodized blue. Markings are stenciled in black on the end cap.

Reference: ORDATA Online, MIDAS.

Ordnance Technical Data Sheet
MK 58 Marine Marker

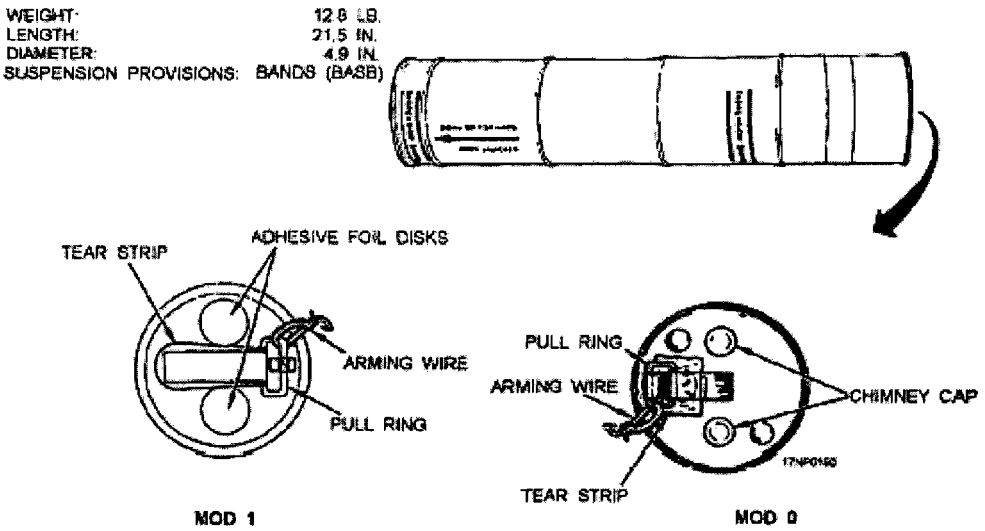

Nomenclature: MK 58 Marine Marker
Ordnance Family: Pyrotechnic/Smoke
DODIC:
Filler: Red phosphorus composition
Filler weight:
Item weight: 5.806 kg (12.8 Lbs)
Diameter: 124.5 mm (4.9in)
Length: 546.1 mm (21.5in)
Fuze: Saltwater activated battery

Usage: Mark 58 is designed for use in air/sea rescue operations, as a target marker, and as a surface wind indicator. It features day or night operation, and can be launched by hand or from aircraft.

Description: Consists of a cylindrical tin can approximately 21.78 inches long and 5.03 inches in diameter. The can contains two pyrotechnic candles of a red phosphorus composition. The ignition end of the marker has three holes-two for smoke and flame emission and one for water to enter the Mk 72 Mod 1 seawater-activated battery. Adhesive foil disks hermetically seal the two emission holes. A reinforced adhesive foil strip with a rectangular pull ring hermetically seals the battery cavity hole

Reference: ORDATA Online, NAVSEA SWO050-AB-MMA-010, NAVAIR 11-15-7

Ordnance Technical Data Sheet
U.S. Bomb Unit, Dummy, BDU-28/B

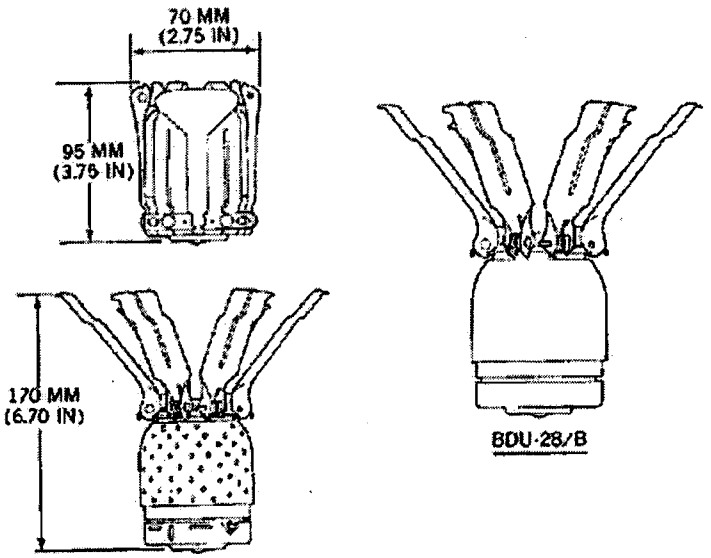

Nomenclature: BDU-28/B
Ordnance Family: Submunitions
DODIC: Not provided
Filler: N/A
Filler weight: N/A
Item weight: 785 g
Diameter: 70.00 mm
Length: 95.00 mm
Maximum Range: N/A
Fuze:

Usage: The BDU-28/B is a small, Drag-vane stabilized, inert dummy bomb used for training ground handling and loading crews

Description: The body of the BDU-28/B is painted the same red color as the bdu-27/B but has no circumferential band. The vanes are anodized greenish-gold and the endcap is anodized blue. Markings are stenciled in black on the end cap.

Reference: ORDATA Online, MIDAS.

Ordnance Technical Data Sheet
Composition 4 (C-4)

C-4, or **composition 4**, is one variety of **plastic explosive**. The basic idea of plastic explosives, also called **plastic bonded explosives** (PBX), is to combine explosive chemicals with a **plastic binder** material. The binder has two important jobs:

1. It coats the explosive material, so it's less sensitive to shock and heat. This makes it relatively safe to handle the explosive. 2. It makes the explosive material highly malleable. You can mold it into different shapes to change the direction
2. of the explosion.

The explosive material in C-4 is **cyclotrimethylene-trinitramine** (C3H6N6O6), commonly called RDX (for "research development explosive"). The additive material is made up of polyisobutylene, is the binder, and **di(2-ethylhexyl) sebacate**, the plasticizer (the element that makes the material malleable). It also contains a small amount of motor oil and some **2, 3-dimethyl-2, 3-dinitrobutane** (DMDNB), which functions as a **chemical marker** for security forces.

C-4 Ingredients

- **RDX** - 91 percent
- **Di(2-ethylhexyl) sebacate** - 5.3 percent
- **Polyisobutylene** - 2.1 percent
- **Motor oil** - 1.6 percent

To make C-4 blocks, explosives manufacturers take RDX in powder form and mix it with water to form a slurry. They then add the binder material, dissolved in a solvent, and mix the materials with an **agitator**. They remove the solvent through distillation and remove the water through drying and filtering. The result is a relatively stable, solid explosive with a consistency similar to modeling clay.

As with other explosives, you need to apply some form of energy to C-4 to set off the chemical reaction. Because of the stabilizer elements, it takes a considerable shock to set off this reaction; lighting C-4 with a match will just make it burn slowly, like a piece of wood (in Vietnam, soldiers actually burned C-4 as an improvised cooking fire). Even shooting the explosive with a rifle won't trigger a reaction. Only the use of a **detonator**, or **blasting cap** will properly initiate C-4 explosives.

A detonator is a smaller more sensitive explosive that's easer to set off. When trigged the detonator applies a powerful shock which then ignites the C-4 explosive material.
When the explosive chemical reaction begins, the C-4 decomposes rapidly to release a variety of gases (notably, nitrogen and carbon oxides). The gases initially expand at about **26,400 feet per second** (8,050 meters per second), applying a huge amount of force to the surrounding area. To the casual observer, the explosion is nearly instantaneous -- one second, everything's normal, and the next it's totally destroyed.
The explosion has **two phases**. The initial expansion inflicts most of the damage. It also creates an extreme low-pressure area at the explosion's origin -- the gases are moving outward so rapidly that they suck all or most of the gas from the "middle" of the

explosion. After the initial outward blast, gases rush back in to the partial vacuum, creating a second, less-destructive inward energy wave.

The U.S. military is the primary manufacturer of C-4.

Reference: ORDATA Online, MIDAS, Military Demolition Material List

Ordnance Technical Data Sheet
MK 6 Mod 3 Signal

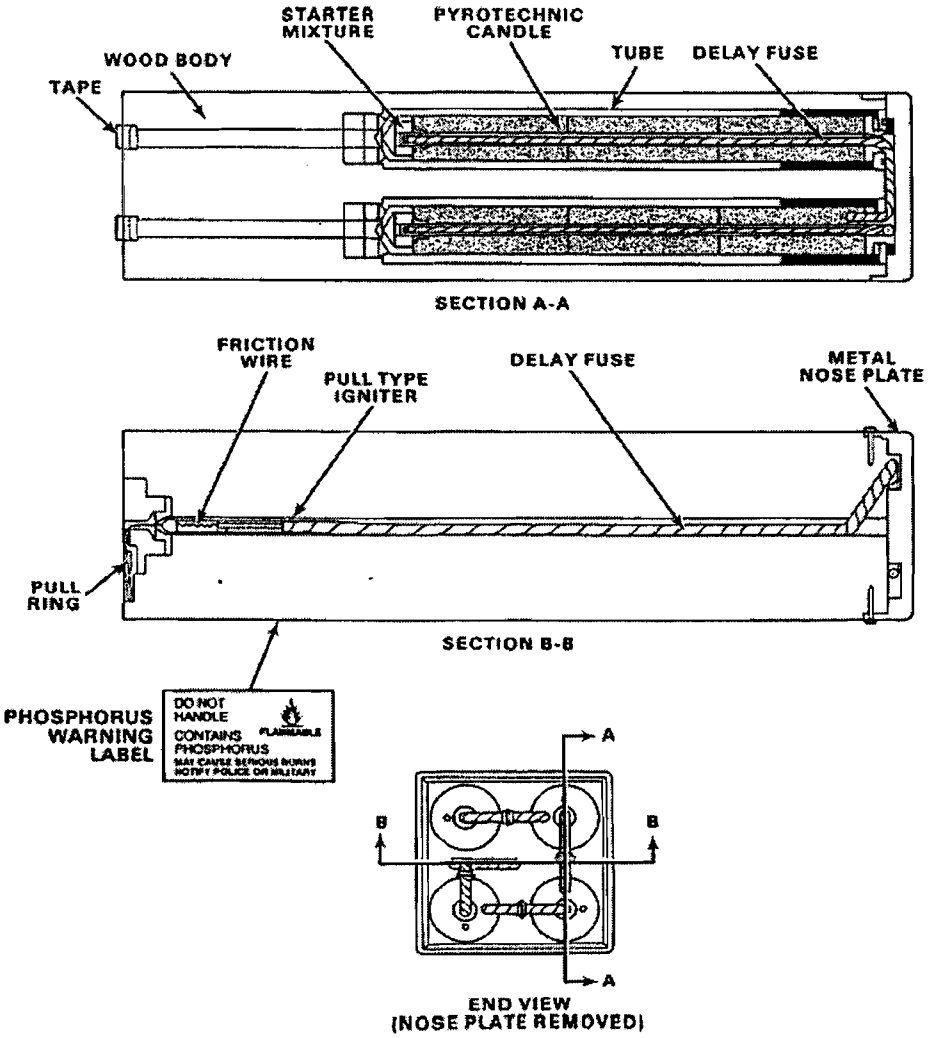

Figure 11-2.1 Aircraft Smoke and Illumination Signal Mk 6 Mod 3

Nomenclature:	MK 6 Mod 3 Aircraft Smoke and Illumination Signal
Ordnance Family:	Pyrotechnic/Smoke
DODIC:	L525
Filler:	Red phosphorus composition
Filler weight:	4 pounds 1 ounce
Item weight:	5.806 kg (12.8 Lbs)
Diameter:	128.5 mm (5.06 inches square)
Length:	517.14 mm (20.36 in)
Fuze:	Friction

Usage: This pyrotechnic device is launched from surface craft only to produce a day or night floating reference point. One of its principal particular uses is as a man-overboard marker.

Description: This device consists of a rectangular-shaped, wooden body (20.36 inches long and 5.06 inches square) with a flat, die-cast metal plate affixed to one end to protect it from water impact damage and to maintain it in the correct floating attitude. There are four flame and smoke emission holes in the opposite end, each capped and sealed with tape. The pull wire ring, also at the emission end, is likewise covered with tape.

This device has a direct-firing ignition system. Ignition results from a quick pull on the pull ring in a direction perpendicular to the end of the signal. The pull ring is pulled by hand, and the device is thrown into the water immediately. The pull wire ignites a 90 second delay fuse which ignites the quickmatch at the top of the first of four candles. The quickmatch ignites the first candle starting mix which, in turn, initiates burning of that candle. Expanding gases of combustion force the cap and tape from the emission hole, allowing smoke and flame to be emitted. When the first candle is nearly burned out, a transfer fuse carries the ignition to the quickmatch of the next candle in series. This process continues until all four candles have burned. Yellow flame and gray-white smoke are produced for a minimum of 40 minutes.

Reference: NAVSEA SWO050-AB-MMA-010, NAVAIR 11-15-7

Ordnance Technical Data Sheet
U.S. Bomb, AT, MK 118

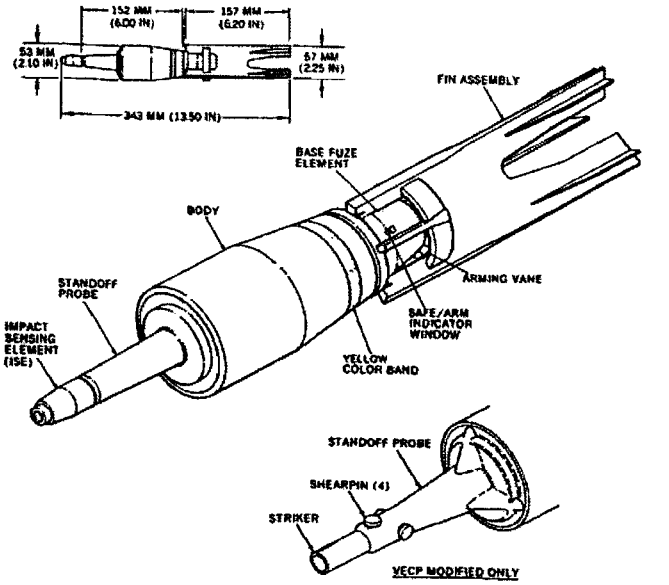

Nomenclature:	**U.S. BOMB, AT, MK 118**
Ordnance Family:	Submunitions
DODIC:	PN#1569562
Filler:	Composition B
Filler weight:	181.00 g
Item weight:	590.00 g
Diameter:	53.00 mm
Length:	165.00 mm
Maximum Range:	N/A
Fuze:	MK1 fuzing system

Usage: These are aerially dispensed, antitank (AT) shaped charge, target-discriminating, fin-stabilized bombs that use the MK 1 fuzing system. The fuzing system provides for impact firing after contact with either a soft or hard target. An inert loaded bomb, containing a live fuze but no main explosive charge, is used for fuze reliability testing and establishing delivery tactics.

Description: The impact sensing element (Mods 0 and 1 bomb) and base fuze vanes are unpainted. The standoff probe, bomb body, and base fuze element cover are anodized gold. The fins are white plastic. A 15-millimeter (0.60-inch) yellow band is stenciled around the base of the bomb body. A metal foil decal, with the words SAFE and ARM in silver letters on a green and red background is affixed to the base fuze element cover just above the safe/arm indicator window. On some bombs, the decal is replaced with the words ARMED WHEN RED stenciled in black in the same location. The assembly

drawing number and loading data are stenciled in black on the base fuze element cover and the forward portion of the bomb body.

Reference: ORDATA Online.

Ordnance Technical Data Sheet
U.S. BOMB, AT, MK 118 MODS 0 & 1

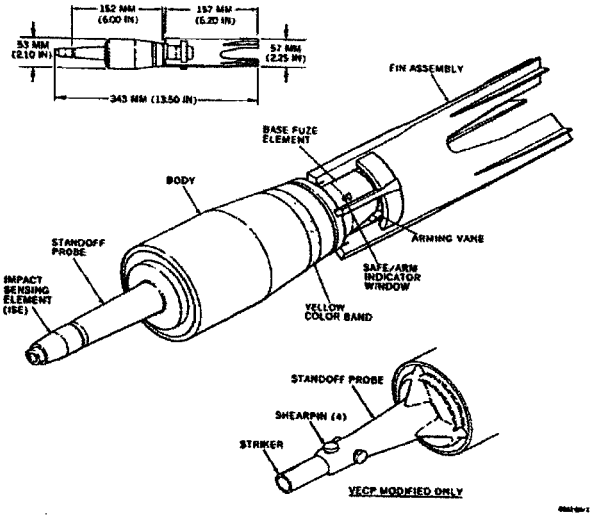

Nomenclature:	MK 118 MODS 0 & 1
Ordnance Family:	Submunitions
DODIC:	PN#1569562
Filler:	Octol
Filler weight:	170.00 g
Item weight:	590.00 g
Diameter:	53.00 mm
Length:	165.00 mm
Maximum Range:	N/A
Fuze:	Mk 1 fuzing system

Usage: These are aerial dispensed, antitank (AT) shaped charge, target discriminating, in-stabilized bombs that use the Mk 1 fuzing system. The fuzing system provides for impact firing after contact with either a soft or hard target. An inert loaded bomb, containing a live fuze but no main explosive charge, is used for fuze reliability testing and establishing delivery tactics.

Description: The impact sensing element (Mods 0 and 1 bomb) and base fuze vanes are unpainted. The standoff probe, bomb body, and base fuze element cover are anodized gold. The fins are white plastic. A 15-millimeter (0.60-inch) yellow band is stenciled around the base of the bomb body. A metal foil decal, with the words SAFE and ARM in silver letters on a green and red background is affixed to the base fuze element cover just above the safe/arm indicator window. On some bombs, the decal is replaced with the words ARMED WHEN RED stenciled in black in the same location. The assembly

drawing number and loading data are stenciled in black on the base fuze element cover and the forward portion of the bomb body.

Reference: ORDATA Online, MIDAS.

Ordnance Technical Data Sheet
U.S. Bomb, AT, MK 118

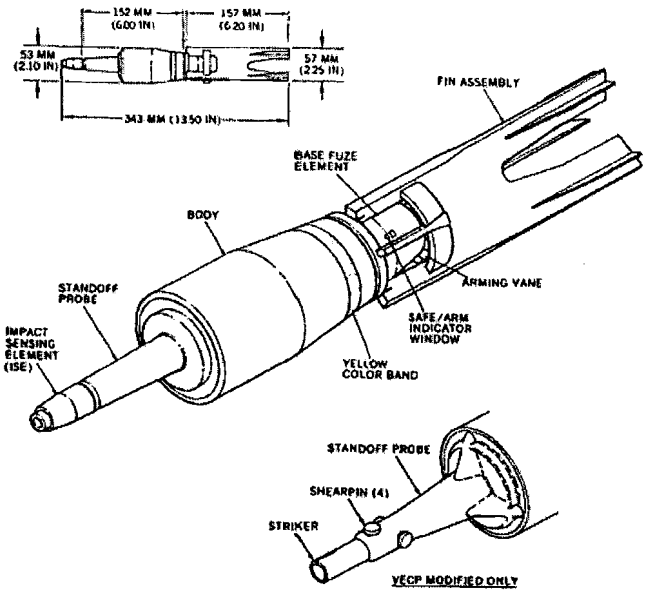

Nomenclature:	**U.S. BOMB, AT, MK 118**
Ordnance Family:	Submunitions
DODIC:	PN#1569562
Filler:	Composition B
Filler weight:	181.00 g
Item weight:	590.00 g
Diameter:	53.00 mm
Length:	165.00 mm
Maximum Range:	N/A
Fuze:	MK1 fuzing system

Usage: These are aerially dispensed, antitank (AT) shaped charge, target-discriminating, fin-stabilized bombs that use the MK 1 fuzing system. The fuzing system provides for impact firing after contact with either a soft or hard target. An inert loaded bomb, containing a live fuze but no main explosive charge, is used for fuze reliability testing and establishing delivery tactics.

Description: The impact sensing element (Mods 0 and 1 bomb) and base fuze vanes are unpainted. The standoff probe, bomb body, and base fuze element cover are anodized gold. The fins are white plastic. A 15-millimeter (0.60-inch) yellow band is stenciled around the base of the bomb body. A metal foil decal, with the words SAFE and ARM in silver letters on a green and red background is affixed to the base fuze element cover just above the safe/arm indicator window. On some bombs, the decal is replaced with the words ARMED WHEN RED stenciled in black in the same location. The assembly

drawing number and loading data are stenciled in black on the base fuze element cover and the forward portion of the bomb body.

Reference: ORDATA Online.