N00164.AR.000897
NSWC CRANE
5090.3a

Resource Conservation and Recovery Act (RCRA) Facility Investigation (RFI) Report for SWMU 2 - Dye Burial Grounds

Naval Surface Warfare Center, Crane Division

Crane, Indiana

Volume II of II - Appendices

NAVFAC
Naval Facilities Engineering Command

Southern Division
Naval Facilities Engineering Command

Contract Number N62467-94-D-0888

Contract Task Order 0010

October 2004

APPENDIX A

BORING LOGS AND MONITORING WELL CONSTRUCTION SHEETS

Tetra Tech NUS, Inc.

BORING LOG

PROJECT NAME: NSWC CRANE
PROJECT NUMBER: N7141 CTO 10
DRILLING COMPANY: EFS
DRILLING RIG: Geoprobe 54LT

BORING NUMBER: 02SB01
DATE: 7/25/01
GEOLOGIST: K. Henn
DRILLER: A. Certain

	Sample No. and Type or RQD	Depth (Ft.) or Run No.	Blows / 6" or RQD (%)	Sample Recovery / Sample Length	Lithology Change (Depth /Ft.) or Screened Interval	MATERIAL DESCRIPTION: Soil Density/ Consistency or Rock Hardness	Color	Material Classification	USCS	Remarks	PID/FID Reading (ppm): Sample	Sampler BZ	Borehole*	Driller BZ**
	S-1	1		3.0/4.0		Stiff	br	clayey silt and	ML/	dry Fill	0			
		2						organic silt, tr. red	OL					
0-4		3			3.0			rock (ss) frags						
		4		3.0 Km/		Stiff	br	silty clay, trace	CL	damp Fill	0			
	S-2	5		~~4.0~~/4.0				rock frags						
		6				M. Stiff								
4-8		7								Fill	0			
		8				Soft to M. Stiff								
	S-3	9		3.0/3.0	9.1									
8-11		10				Dense	H. br to or br.	Silty v. fine sand	SM	natural material @ 9.1'	0			
		11			11			and, MH						
		12												
		13						Bottom of boring						
		14						@ 11.0 feet						
		15												
		16												
		17												
		18												
		19												
		20												
							SAMPLED: ~~02SS~~ NOT taken according to FSP							
							SAMPLED: 02SB010911							

* When rock coring, enter rock brokeness.

** Include monitor reading in 5 foot intervals @ borehole. Increase reading frequency if elevated reponse read.

Remarks: MS/MSD and Duplicate taken on 02SB010911

Drilling Area Background (ppm): 0

Converted to Well: Yes ____ No X Well I.D. #: ____

Tetra Tech NUS, Inc.

BORING LOG

PROJECT NAME: NSWC CRANE
PROJECT NUMBER: N7141 CTO 10
DRILLING COMPANY: EFS
DRILLING RIG: Geoprobe 54 LT

BORING NUMBER: 02SB02
DATE: 7/24/01
GEOLOGIST: K. Hohn
DRILLER: A. Certain

Sample No. and Type or RQD	Depth (Ft.) or Run No.	Blows / 6" or RQD (%)	Sample Recovery / Sample Length	Lithology Change (Depth /Ft.) or Screened Interval	Soil Density/ Consistency or Rock Hardness	Color	Material Classification	USCS*	Remarks	PID/FID Reading (ppm) Sample	Sampler BZ	Borehole**	Driller BZ**
S-1	1		4.0/4.0	1.0	M. stiff	br.	clayey silt w/ roots	ML	damp fill	0			
0-4'	2				to stiff		and organics						
	3								damp	0			
	4								fill				
S-2	5		3.5/4.0	5.0					damp	0			
	6				Stiff	org. br.	silty sand and rock frags	SM	fill				
4-8'	7						@ 6.5' deep maroon		moist				
	8			7.5			to reddish stained		fill?				
S-3	9		2.0/2.0		Loose		rock frags		moist	0			
8-10	10			10.0'		red-brown	Fine to med sand and	SW	damp natural material				
	11						rock frags		@ 7.5'				
	12												
	13						Refusal at 10.0'						
	14												
	15						Bottom of boring						
	16						@ 10.0'						
	17												
	18												
	19												
	20												
							SAMPLED: ~~02SS~~ not taken per FSP						
							SAMPLED: 02SB 020810						

* When rock coring, enter rock brokeness.

** Include monitor reading in 6 foot intervals @ borehole. Increase reading frequency if elevated reponse read.

Drilling Area Background (ppm): 0

Remarks:

Converted to Well: Yes ____ No X Well I.D. #: ____

Tetra Tech NUS, Inc.

BORING LOG

PROJECT NAME: NSWC CRANE
PROJECT NUMBER: N7141 CTO 10
DRILLING COMPANY: EFS
DRILLING RIG: Geoprobe 54LT

BORING NUMBER: 02SB03
DATE: 7/25/01
GEOLOGIST: K. Henn
DRILLER: A. Certain

Sample No. and Type or RQD	Depth (Ft.) or Run No.	Blows / 6" or RQD (%)	Sample Recovery / Sample Length	Lithology Change (Depth /Ft.) or Screened Interval	Soil Density/ Consistency or Rock Hardness	Color	Material Classification	USCS	Remarks	PID/FID Reading (ppm) Sample*	Sampler BZ	Borehole**	Driller BZ**
S-1	1		3.5/4.0		m. stiff	br to	silty clay, some	CL	damp Fill	2			
0-4'	2			1.7		H. br	organic matter						
	3				soft	H. br	silty clay, lt. gray			3.5			
	4				to m. stiff	to lt. gray	mottled, trace roots	CL	Fill	2.0			
S-2	5		4.0/4.0										
	6								Fill 2	0			
4-8	7												
	8			7.5		yel br, to lt. gray	Fine silty sand	SM	Natural in situ material	0			
S-3	9												
8-10	10									0			
	11												
	12						Bottom of boring at 10' bgs						
	13												
	14												
	15						Boring reversal at 10'						
	16												
	17												
	18												
	19												
	20												

SAMPLED: 02SS03 0001 - metals, 02SS03 0002 - dye
SAMPLED: 02SB03 0709 metals + dyes + pH, CEC, TOC

* When rock coring, enter rock brokeness.

** Include monitor reading in 6 foot intervals @ borehole. Increase reading frequency if elevated reponse read.

Remarks: * PID readings may be due to moisture/humidity

Drilling Area Background (ppm): 0

Converted to Well: Yes ____ No X Well I.D. #: ____

Tetra Tech NUS, Inc.

BORING LOG

PROJECT NAME: NSWC CRANE
PROJECT NUMBER: N7141 CTO 10
DRILLING COMPANY: EFS
DRILLING RIG: Geoprobe 54LT

BORING NUMBER: 02SB04
DATE: 07/24/01
GEOLOGIST: K. Hern
DRILLER: Adam Certain

Sample No. and Type or RQD	Depth (Ft.) or Run No.	Blows / 6" or RQD (%)	Sample Recovery / Sample Length	Lithology Change (Depth /Ft.) or Screened Interval	MATERIAL DESCRIPTION: Soil Density/ Consistency or Rock Hardness	Color	Material Classification	USCS*	Remarks	PID/FID Reading (ppm): Sample	Sampler BZ	Borehole**	Driller BZ**
S-1	1		2.4/4.0		soft	lt. br.	clayey silt with	ML	dry fill	0			
2-4'	2						roots and rock frag						
	3			3.0			and iron nodules			0			
	4				m. stiff	lt. br	silty clay tr. sand - br to dk	CL	damp native?				
S-2	5		4.0/4.0	5.5			gray modeling			0			
	6				m. dense	lt br	fine sand, mottled,	SP	damp native (natural)	0			
7-8'	7						w/ red iron nodules						
	8						and lt. gray models			0			
S-3	9												
8-10	10			10.0						0			
	11						End of boring at						
	12						10.0'						
	13												
	14												
	15												
	16												
	17												
	18												
	19												
	20												
							SAMPLED: 02SS040001 - metals 02SS040002 - dye						
							SAMPLED: 02SB040305 - metals dye						

* When rock coring, enter rock brokeness.

** Include monitor reading in 6 foot intervals @ borehole. Increase reading frequency if elevated reponse read.

Remarks:

Drilling Area Background (ppm): 0

Converted to Well: Yes ____ No X Well I.D. #: ____

Tetra Tech NUS, Inc.

BORING LOG

PROJECT NAME: NSWC CRANE
PROJECT NUMBER: N7141 CTO 10
DRILLING COMPANY: EFS
DRILLING RIG: Geoprobe 54LT

BORING NUMBER: 02SB05
DATE: 07/24/01
GEOLOGIST: K. Hand
DRILLER: A. Certaid

Sample No. and Type or RQD	Depth (Ft.) or Run No.	Blows / 6" or RQD (%)	Sample Recovery / Sample Length	Lithology Change (Depth /Ft.) or Screened Interval	Soil Density/ Consistency or Rock Hardness	Color	Material Classification	USCS	Remarks	PID/FID Reading (ppm) Sample	Sampler BZ	Borehole*	Driller BZ**
S-1	1		3.5/4	0.3			topsoil and clayey	OL	Dry Fill	0			
	2			1.7	M. STIFF	Lt. br.	clayey silt, some roots	CL					
0-4'	3				SOFT	br.	silty clay, tr. roots	CL	Dry Fill	0			
	4								Damp				
S-2	5		3.0/3.0			Lt br	silty clay, mottled		Dry Fill	0			
4-7'	6						w/ lt. gray, trace some						
	7						rock frags *		Fill?	0			
	8			7.8									
8-8.8' S-3	9			8.8		Lt gr.	Fine sand, some		NATURAL	0			
	10						SS rock frags		?				
	11												
	12						Bottom of boring						
	13						at 8.8' due to						
	14						boring (advancement)						
	15						refusal						
	16												
	17												
	18												
	19												
	20												

SAMPLED: 02SS 050001 metals, 050002 dye
SAMPLED: 02SB 050809 metals + dye

* When rock coring, enter rock brokeness.

** Include monitor reading in 6 foot intervals @ borehole. Increase reading frequency if elevated reponse read.

Drilling Area Background (ppm): 0

Remarks: * offset northwest approx. 3.0 feet - no change in geology after sample run S-2

Converted to Well: Yes ____ No X Well I.D. #: ____

Tetra Tech NUS, Inc.

BORING LOG

PROJECT NAME: NSWC CRANE
PROJECT NUMBER: N7141 CTO 10
DRILLING COMPANY: EFS
DRILLING RIG: Geoprobe 54LT

BORING NUMBER: 02SB06
DATE: 7/24/01
GEOLOGIST: K. Henn / T. Baja
DRILLER: A. Certin

Sample No. and Type or RQD	Depth (Ft.) or Run No.	Blows / 6" or RQD (%)	Sample Recovery / Sample Length	Lithology Change (Depth /Ft.) or Screened Interval	Soil Density/ Consistency or Rock Hardness	Color	Material Classification	USCS*	Remarks	PID/FID Reading (ppm) Sample	Sampler BZ	Borehole**	Driller BZ**
S-1	1		4.0/4.0	1.0	stiff	br	organic silt	OL	dry to damp Fill	0			
0-4'	2				soft to	lt. br	silty clay, tr. roots,	CL	damp				
	3				m. stiff		lt. gray mottles			0			
	4								Fill				
S-2	5			5.0						0			
4-7	6				m. dense	yel-orange	clayey sand and silty	SM/SC	damp Fill?				
	7			7.0			sand w/ rock frags						
7-9	S-3 8				m. dense	lt. gr	silty sand w/ orange mottles	SM	damp natural material	0			
	9			9.0									
	10												
	11						Refusal at 8.0'						
	12												
	13						Bottom of boring @ 8.0'						
	14												
	15												
	16												
	17												
	18												
	19												
	20												
						SAMPLED: 02SS not taken according to FSP							
						SAMPLED: 02SB 060709							

* When rock coring, enter rock brokeness.

** Include monitor reading in 6 foot intervals @ borehole. Increase reading frequency if elevated reponse read.

Drilling Area Background (ppm): 0

Remarks:

Converted to Well: Yes ____ No X Well I.D. #: ____

Tetra Tech NUS, Inc.

BORING LOG

PROJECT NAME: NSWC CRANE
PROJECT NUMBER: N7141 CTO 10
DRILLING COMPANY: EFS
DRILLING RIG: Geoprobe 54LT

BORING NUMBER: 02SB07
DATE: 7/24/01
GEOLOGIST: M. Henn
DRILLER: A. Certain

Sample No. and Type or RQD	Depth (Ft.) or Run No.	Blows / 6" or RQD (%)	Sample Recovery / Sample Length	Lithology Change (Depth /Ft.) or Screened Interval	MATERIAL DESCRIPTION: Soil Density/ Consistency or Rock Hardness	Color	Material Classification	USCS*	Remarks	PID/FID Reading (ppm): Sample	Sampler BZ	Borehole**	Driller BZ**
S-1	1		3.5/4.0		soft	br.	organic silt and	ML	damp Fill	0			
	2			2.0	↓		clayey silt	OL					
0-4'	3				v. soft	lt br.	silty clay, lt. gray		wet Fill	0			
	4				soft		mottled		damp				
S-2	5		3.5/3.5				↓		Fill				
	6			6.1									
4.0-7.5'	7				yel-orange	v.	clayey silt and sand	CL	Fill?				
	8			8.0	to lt. gray	dense	blocky non-strat.						
	9			9.0	lt. gray		structure						
	10					v. dense	fine silty sand	SM	natural soil				
	11												
	12						Refusal at 9.0'						
	13												
	14						Bottom of boring						
	15						@ 9.0'						
	16												
	17												
	18												
	19												
	20												
						SAMPLED: ~~02SS~~ Not taken based upon FSP							
						SAMPLED: 02SB070709							

* When rock coring, enter rock brokeness.

** Include monitor reading in 6 foot intervals @ borehole. Increase reading frequency if elevated reponse read.

Drilling Area Background (ppm): 0

Remarks:

Converted to Well: Yes ____ No X Well I.D. #: ____

Tetra Tech NUS, Inc.

BORING LOG

PROJECT NAME: NSWC CRANE
PROJECT NUMBER: N7141 CTO 10
DRILLING COMPANY: EFS
DRILLING RIG: Geoprobe 54 LT

BORING NUMBER: 02SB08
DATE: 07/24/01
GEOLOGIST: K. Hann
DRILLER: A. Certain

Sample No. and Type or RQD	Depth (Ft.) or Run No.	Blows / 6" or RQD (%)	Sample Recovery / Sample Length	Lithology Change (Depth /Ft.) or Screened Interval	MATERIAL DESCRIPTION: Soil Density/ Consistency or Rock Hardness	Color	Material Classification	USCS*	Remarks	PID/FID Reading (ppm): Sample	Sampler BZ	Borehole**	Driller BZ**
S-1	1		3.5/4	RUN 0.0	m. stiff	br.	clayey silt w/ roots	ML/	dry FILL	0			
	2			1.9			and topsoil	OL					
0-4'	3				soft	lt. br.	silty clay, trace	CL	dry	0			
	4						roots, mottled						
S-2	5		4.0/4	5.0			lt. gray		dry to damp	0			
4-8	6				m. stiff	lt br.							
	7				to stiff				dry FILL	0			
	8			8.0			- red cobble @ 7.5'						
8.0-10.5' S-3	9				m. dense	lt. gr	Fine sand, tr. rk frag	SP	NATIVAL	0			
	10						- red stained						
	11			10.5			rock frags			0			
	12												
	13						Bottom of boring			0			
	14						at 10.5' bgs						
	15												
	16												
	17												
	18												
	19												
	20												
							SAMPLED: 02SS 080001 - metals; 02SS 080002 - dye						
							SAMPLED: 02SB 080810 dye + metals						

* When rock coring, enter rock brokeness.

** Include monitor reading in 6 foot intervals @ borehole. Increase reading frequency if elevated reponse read.

Drilling Area Background (ppm): 0

Remarks:

Converted to Well: Yes ____ No X Well I.D. #: ____

Tetra Tech NUS, Inc.

BORING LOG

PROJECT NAME: NSWC CRANE
PROJECT NUMBER: N7141 CTO 10
DRILLING COMPANY: EFS
DRILLING RIG: Geoprobe 54 LT

BORING NUMBER: 02SB09
DATE: 07/24/01
GEOLOGIST: K. Henn
DRILLER: A. Certain

Sample No. and Type or RQD	Depth (Ft.) or Run No.	Blows / 6" or RQD (%)	Sample Recovery / Sample Length	Lithology Change (Depth /Ft.) or Screened Interval	Soil Density/ Consistency or Rock Hardness	Color	Material Classification	USCS*	Remarks	PID/FID Reading (ppm) Sample	Sampler BZ	Borehole**	Driller BZ**
S-1	1		4.0/4.0		soft to	br.	organic silt and	OL	dry Fill	0			
0-4	2			2.0	m. stiff		clayey silt w/ roots tr. rocks	ML					
	3					H.br	silty clay, w/ roots	CL	Fill	0			
	4								dry Fill				
S-2	5		4.0/4.0										
	6			5.5			SS FRAGS stained		Fill				
4-8	7			6.0	v. dense		red. (does not						
	8			6.5	m. stiff		appear to be iron		Fill	0			
				7.5	v. dense	orange							
S-3	9						clayey silt and sand	ML					
8-10	10			10.		H.br	Fine to med sand	SW	Fill				
	11						some rock FRAGS			0			
	12					H.gr.	Fine ~~to med~~ SAND		native @				
	13						sand w/ trace		7.5' bgs				
	14						rock FRAGS			0			
	15												
	16						Boring Refusal at 10						
	17						Bottom of boring						
	18						at 10' bgs						
	19												
	20												

SAMPLED: 02SS090001 metals
SAMPLED: 02SS090002 dyes
SAMPLED: 02SB090709 metals + dyes

* When rock coring, enter rock brokeness.

** Include monitor reading in 6 foot intervals @ borehole. Increase reading frequency if elevated reponse read.

Drilling Area Background (ppm): 0

Remarks:

Converted to Well: Yes ____ No X Well I.D. #: ____

Tetra Tech NUS, Inc.

BORING LOG

PROJECT NAME: NSWC CRANE
PROJECT NUMBER: N7141 CTO 10
DRILLING COMPANY: EFS
DRILLING RIG: Geoprobe 54LT
BORING NUMBER: 02SB10
DATE: 7/24/01
GEOLOGIST: G. Henn
DRILLER: A. Curtain

Sample No. and Type or RQD	Depth (Ft.) or Run No.	Blows / 6" or RQD (%)	Sample Recovery / Sample Length	Lithology Change (Depth /Ft.) or Screened Interval	MATERIAL DESCRIPTION: Soil Density/ Consistency or Rock Hardness	Color	Material Classification	USCS*	Remarks	PID/FID Reading (ppm): Sample	Sampler BZ	Borehole**	Driller BZ**
SS	1		2.5/4.0		m. stiff	br.	organic silt and	OL	damp to	0			
	2			1.5			clayey silt, tr. rock frags	ML	dry				
0-4	3				m. stiff	H. br	silty clay	CL	Fill	0			
	4												
	5								Fill				
	6									0			
	7			6.1	yellowish		clayey silt and sand	CL	Fill?				
	8			7.9	orange		blocky non-stratified		Fill?	0			
	9				v. dense		structure						
	10			9.5			fine sand and silt	SM	natural	0			
	11						some clay	SP	material				
	12												
	13						Boring refusal @						
	14						9.5						
	15												
	16						End of boring @						
	17						9.5'						
	18												
	19												
	20												

SAMPLED: 02SS100001 – metals
SAMPLED: 02SS100002 – dye
SAMPLED: 02SB100810 – dye metals

* When rock coring, enter rock brokeness.

** Include monitor reading in 6 foot intervals @ borehole. Increase reading frequency if elevated reponse read.

Drilling Area Background (ppm): 0

Remarks:

Converted to Well: Yes ____ No X Well I.D. #: ____

Tetra Tech NUS, Inc.

BORING LOG

PROJECT NAME: NSWC CRANE
PROJECT NUMBER: N7141 CTO 10
DRILLING COMPANY: EFS
DRILLING RIG: Geoprobe 54 LT

BORING NUMBER: 02SB11
DATE: 7/24/01
GEOLOGIST: K. Henn
DRILLER: A. Certain

Sample No. and Type or RQD	Depth (Ft.) or Run No.	Blows / 6" or RQD (%)	Sample Recovery / Sample Length	Lithology Change (Depth /Ft.) or Screened Interval	Soil Density/ Consistency or Rock Hardness	Color	Material Classification	USCS*	Remarks	PID/FID Reading (ppm) Sample	Sampler BZ	Borehole**	Driller BZ**
S-1	1		4.0/4.0		Soft	br to	organic silt and	OH/	damp Fill	0			
0-4.0	2				↓	H.br	clayey silt	ML	damp				
	3				v. soft		w/iron nodules		wet Fill	0			
	4			3.0	soft	H.br	silty clay, lt.	CL	damp				
4-6'	S-2 5			4.0			gray mottles w/		Fill	0			
	6			6.0	v. dense		roots						
	7					yl-brown	clayey sand and	SC/	Fill?				
	8					lt. br.	silty sand w/	SM	natural?				
	9						rock frags red-		@4.2'				
	10						(iron stained) @ 5' bgs						
	11												
	12						Boring refusal @ 6.0						
	13												
	14						Bottom of boring						
	15						At 6.0' bgs						
	16												
	17												
	18												
	19												
	20												

SAMPLED: 02SS11 0001 - metals
SAMPLED: 02SS11 0002 - dyes
SAMPLED: 02SB11 0406 < metals & dyes

* When rock coring, enter rock brokeness.

** Include monitor reading in 6 foot intervals @ borehole. Increase reading frequency if elevated reponse read.

Drilling Area Background (ppm): 0

Remarks:

Converted to Well: Yes ____ No X Well I.D. #: ____

Tetra Tech NUS, Inc.

BORING LOG

PROJECT NAME: NSWC CRANE
PROJECT NUMBER: N7141 CTO 10
DRILLING COMPANY: EFS
DRILLING RIG: Geoprobe 54LT

BORING NUMBER: 02SB12
DATE: 7/25/01
GEOLOGIST: K. Henn
DRILLER: A. Curtain

Sample No. and Type or RQD	Depth (Ft.) or Run No.	Blows / 6" or RQD (%)	Sample Recovery / Sample Length	Lithology Change (Depth /Ft.) or Screened Interval	Soil Density/ Consistency or Rock Hardness	Color	Material Classification	USCS*	Remarks	PID/FID Reading (ppm) Sample	Sampler BZ	Borehole**	Driller BZ**
							Road gravel						
S-1	1		4.0/4.0		m. stiff	H. br to	silty clay, some rock frags	CL	dry to fill	0			
	2						-0.7 to 1.0 Rock frags		damp				
0-4	3			3.0		or brown	- mottled friable		fill	0			
	4				stiff	or br.	clayey silt, trace to some sand	ML					
S-2	5			~~4.5~~ 4.0					natural material	0			
4-7'	6												
	7									0			
	8			7.0'			- some sand @ 7.8'						
	9						Boring refusal						
	10						@ 7.0'						
	11												
	12						Bottom of boring						
	13						At 7.0'						
	14												
	15												
	16												
	17												
	18												
	19												
	20												
						SAMPLED: ~~02SS~~ 0235 not taken due to FSP							
						SAMPLED: 02SB120507							

* When rock coring, enter rock brokeness.

** Include monitor reading in 6 foot intervals @ borehole. Increase reading frequency if elevated reponse read.

Drilling Area Background (ppm): 0

Remarks:

Converted to Well: Yes ____ No X Well I.D. #: ____

Tetra Tech NUS, Inc.

BORING LOG

PROJECT NAME: NSWC CRANE
PROJECT NUMBER: N7141 CTO 10
DRILLING COMPANY: EFS
DRILLING RIG: Geoprobe 54LT

BORING NUMBER: 02SB13
DATE: 7/25/01
GEOLOGIST: K. Henn
DRILLER: A. Certain

Sample No. and Type or RQD	Depth (Ft.) or Run No.	Blows / 6" or RQD (%)	Sample Recovery / Sample Length	Lithology Change (Depth /Ft.) or Screened Interval	MATERIAL DESCRIPTION: Soil Density/ Consistency or Rock Hardness	Color	Material Classification	USCS*	Remarks	PID/FID Reading (ppm): Sample	Sampler BZ	Borehole**	Driller BZ**
S-1	1		3.0/4.0		M. stiff	H. br	Silty clay, mottled	CL	Damp Fill	0			
0-4'	2					to	- sand seam @ 1.0'						
	3					or. br			Damp	0			
	4						- mottled H. gray		Fill				
S-2	5								Damp	0			
	6												
	7			6.8 7.0			Silty Sand, some cl.	SM	Natural material	0			
	8						Bottom of boring @ 7.0'						
	9												
	10												
	11												
	12												
	13												
	14												
	15												
	16												
	17												
	18												
	19												
	20												
						SAMPLED: ~~02SS~~ 02SS NOT taken per FSP							
						SAMPLED: 02SB130507							

* When rock coring, enter rock brokeness.

** Include monitor reading in 6 foot intervals @ borehole. Increase reading frequency if elevated reponse read.

Remarks:

Drilling Area Background (ppm): 0

Converted to Well: Yes ____ No X Well I.D. #: ____

Tetra Tech NUS, Inc.

BORING LOG

PROJECT NAME: NSWC CRANE
PROJECT NUMBER: N7141 CTO 10
DRILLING COMPANY: EFS
DRILLING RIG: Geoprobe 54LT

BORING NUMBER: 02SB14
DATE: 7/25/01
GEOLOGIST: K. Henn
DRILLER: A. Certain

	Sample No. and Type or RQD	Depth (Ft.) or Run No.	Blows / 6" or RQD (%)	Sample Recovery / Sample Length	Lithology Change (Depth /Ft.) or Screened Interval	Soil Density/ Consistency or Rock Hardness	Color	Material Classification	USCS*	Remarks	PID/FID Reading (ppm) Sample	Sampler BZ	Borehole**	Driller BZ**
	S-1	1		3.5/4.0	0.4	Stiff	H. br	Organic silt	OL	Dry Fill	0		0	
		2				Stiff grading to	br	Silty clay, some	CL					
0-4'		3				Soft		roots and organics		damp Fill	0		0	
		4						v. plastic		moist				
	S-2	5		3.9/4.0							0		0	
		6								moist Fill?				
4-8'		7									0			
		8			7.4	m. dense	H. gr to yel-or.	Silty v. fine sand	SM	damp Natural material				
8-9.5	S-3	9			9.5			trace rock frags			0			
		10						trace clay		damp ?				
		11						mottled 7.4-9.0'						
		12						Boring refusal at						
		13						9.5'						
		14												
		15						Bottom of boring at						
		16						9.5'						
		17												
		18												
		19												
		20												
							SAMPLED: ~~02SS~~ 0255 not taken according to FSP							
							SAMPLED: 02SB140709							

* When rock coring, enter rock brokeness.

** Include monitor reading in 6 foot intervals @ borehole. Increase reading frequency if elevated reponse read.

Remarks:

Drilling Area Background (ppm):

Converted to Well: Yes ____ No X Well I.D. #: ____

Tetra Tech NUS, Inc.

BORING LOG

PROJECT NAME: NSWC CRANE
PROJECT NUMBER: N7141 CTO 10
DRILLING COMPANY: EFS
DRILLING RIG: Geoprobe 54LT

BORING NUMBER: 02SB15
DATE: 7/25/01
GEOLOGIST: K. Henn
DRILLER: A. Certain

Sample No. and Type or RQD	Depth (Ft.) or Run No.	Blows / 6" or RQD (%)	Sample Recovery / Sample Length	Lithology Change (Depth /Ft.) or Screened Interval	MATERIAL DESCRIPTION: Soil Density/ Consistency or Rock Hardness	Color	Material Classification	USCS*	Remarks	PID/FID Reading (ppm): Sample	Sampler BZ	Borehole**	Driller BZ**
S-1	1		3.5/4.0		Stiff	H.br	clayey silt and	ML	dry Fill	0.5			
	2					to	gravel, some organ.					0	
0-4'	3						↳ SS Frags		dry Fill	0			
	4												
S-2	5					or.	4.5' — SS Frags/milled		damp Fill	0			
	6					brown	5.5' — red stained						
	7						SS Frags		natural material?	0		0	
	8			8.0			7.5' - trace sand		damp	0			
	9												
	10						Bottom boring @ 8.0'						
	11												
	12												
	13												
	14												
	15												
	16												
	17												
	18												
	19												
	20												
						SAMPLED: 02SS03 0001 / 02SS15 0002			metals dyes				
						SAMPLED: 02SB150608			- metals dyes + pH, CEC, TOC				

* When rock coring, enter rock brokeness.

** Include monitor reading in 6 foot intervals @ borehole. Increase reading frequency if elevated reponse read.

Drilling Area Background (ppm): 0

Remarks:

Converted to Well: Yes ____ No X Well I.D. #: ____

Tetra Tech NUS, Inc.

BORING LOG

PROJECT NAME: NSWC CRANE
PROJECT NUMBER: N7141 CTO 10
DRILLING COMPANY: EFS
DRILLING RIG: Geoprobe 54LT
BORING NUMBER: 02SB16
DATE: 7/25/01
GEOLOGIST: K. Henn
DRILLER: A. Certain

Sample No. and Type or RQD	Depth (Ft.) or Run No.	Blows / 6" or RQD (%)	Sample Recovery / Sample Length	Lithology Change (Depth /Ft.) or Screened Interval	Soil Density/ Consistency or Rock Hardness	Color	Material Classification	USCS*	Remarks *	PID/FID Reading (ppm) Sample	Sampler BZ	Borehole**	Driller BZ**
S-1	1		3.5/4.0		St.Ff	Ho to	clayey silt, trace	ML/	dry NATURAL	0.2		0	
0-4	2					yel-or. br.	sand, trace to	OL	in situ material	0.5			
	3						some roots		dry	0.3		0	
	4						slightly to mod. mottled						
S-2	5		4.0/4.0	4.5						0.7			
4-8	6				m. dense	Ht. br. to	silty v. fine to	SM	dry				
	7					or. brown	fine sand,			0			
	8			8.0			mottled		dry	0			
	9												
	10						Bottom of boring						
	11						@ 8.0'						
	12												
	13												
	14												
	15												
	16												
	17												
	18												
	19												
	20												
						SAMPLED: 02SS/160001 160002							
						SAMPLED: 02SB160507							

* When rock coring, enter rock brokeness.

** Include monitor reading in 6 foot intervals @ borehole. Increase reading frequency if elevated reponse read.

Remarks: ~~to~~ boring is 40' into the woods; it is likely that it is all NATURAL in situ soil.

Drilling Area Background (ppm):

Converted to Well: Yes ____ No X Well I.D. #: ____

Tetra Tech NUS, Inc.

BORING LOG

PROJECT NAME: NSWC CRANE
PROJECT NUMBER: N7141 CTO 10
DRILLING COMPANY: EFS
DRILLING RIG: Geoprobe 54LT
BORING NUMBER: 02SB17
DATE: 7/25/01
GEOLOGIST: K. Henn
DRILLER: A. Curtain

Sample No. and Type or RQD	Depth (Ft.) or Run No.	Blows / 6" or RQD (%)	Sample Recovery / Sample Length	Lithology Change (Depth /Ft.) or Screened Interval	Soil Density/ Consistency or Rock Hardness	Color	Material Classification	USCS*	Remarks *	PID/FID Reading (ppm) Sample	Sampler BZ	Borehole**	Driller BZ**
S-1	1		3.5/4.0		Soft	lt br	clayey silt, trace	CL	dry	Natural insitu material	0		
0-4'	2				to m. stiff	yel br	to some sand						
	3						- trace red rock frags (Frag pan)		dry		0.2		
	4						- lt. gray mottles 3.8' to						
S-2	5		4.0/4.0					CL	dry		0.2		
	6						SS Rock Frags at 6.0'						
4.8'	7						Frag pan						
	8			7.5	loose	yellow br.	silty fine sand	SM	dry				
	9			9.0		to dk br	red stained rocks				0.2		
	10						Frags @ 8.7 to 9.0						
	11												
	12						Bottom of boring 9.0'						
	13												
	14						Refusal at 9.0'						
	15												
	16												
	17												
	18												
	19												
	20												
							SAMPLED: 02SS/70001 metals 02SS/70002 dyes						
							SAMPLED: 02SB/70608						

* When rock coring, enter rock brokeness.

** Include monitor reading in 6 foot intervals @ borehole. Increase reading frequency if elevated reponse read.

Remarks: *Boring is ~40' in from edge of woods it is possible that it is all natural insitu material

Drilling Area Background (ppm): 0

Converted to Well: Yes ____ No X Well I.D. #: ____

Tetra Tech NUS, Inc.

BORING LOG

PROJECT NAME: NSWC CRANE
PROJECT NUMBER: N7141 CTO 10
DRILLING COMPANY: EFS
DRILLING RIG: Geoprobe 54LT

BORING NUMBER: 02SB18
DATE: 7/25/01
GEOLOGIST: K. Henn
DRILLER: A. Curtain

Sample No. and Type or RQD	Depth (Ft.) or Run No.	Blows / 6" or RQD (%)	Sample Recovery / Sample Length	Lithology Change (Depth /Ft.) or Screened Interval	MATERIAL DESCRIPTION: Soil Density/ Consistency or Rock Hardness	Color	Material Classification	USCS*	Remarks	PID/FID Reading (ppm): Sample	Sampler BZ	Borehole**	Driller BZ**
S-1	1		3.7/4.0		St.Sf	H.br	Silty clay, Friable	CL	dry Fill?	0			
0.4	2												
	3								Alluvial material?	0			
	4			3.8	m.dense	H.br to Dr.br	clayey sand, trace SS rock frag.	SC					
S-2	5		2.9/2.9							0			
4.0-6.9	6												
	7			6.9						0			
	8						Refusal at 6.9'						
	9						Bottom of boring						
	10						at 6.9'						
	11												
	12												
	13												
	14												
	15												
	16												
	17												
	18												
	19												
	20												
						SAMPLED: 02SS180001 02SS180002							
						SAMPLED: 02SB180507							

* When rock coring, enter rock brokeness.

** Include monitor reading in 6 foot intervals @ borehole. Increase reading frequency if elevated reponse read.

Drilling Area Background (ppm):

Remarks:

Converted to Well: Yes ____ No X Well I.D. #: ____

Tetra Tech NUS, Inc.

BORING LOG

PROJECT NAME: NSWC CRANE
PROJECT NUMBER: N7141 CTO 10
DRILLING COMPANY: EFS
DRILLING RIG: Geoprobe 54LT

BORING NUMBER: 02SB19
DATE: 7/25/01
GEOLOGIST: K. Henn
DRILLER: A. Certain

Sample No. and Type or RQD	Depth (Ft.) or Run No.	Blows / 6" or RQD (%)	Sample Recovery / Sample Length	Lithology Change (Depth /Ft.) or Screened Interval	Soil Density/ Consistency or Rock Hardness	Color	Material Classification	USCS*	Remarks	PID/FID Reading (ppm) Sample	Sampler BZ	Borehole**	Driller BZ**
S-1	1		4.0/4.0	1.0	dense	lt gr	Road gravel	GM	Damp Fill?	0			
	2				stiff	lt.	silty clay, so tr.	CL					
	3					br	sand, tr. red		Damp Fill?	0			
	4						stained rock frag		natural				
S-2	5		2.0/2.0	4.1	stiff	yel-orange	clayey silt and		Damp	0			
	6			6.0			sand, some rock						
	7						CSS frags						
	8						Bottom of boring						
	9						@ 6.0'						
	10												
	11												
	12												
	13												
	14												
	15												
	16												
	17												
	18												
	19												
	20												
						SAMPLED: 02SS190001							
						SAMPLED: 02SS190002							
						SAMPLED: 02SB190406							

* When rock coring, enter rock brokeness.

** Include monitor reading in 6 foot intervals @ borehole. Increase reading frequency if elevated reponse read.

Drilling Area Background (ppm): 0

Remarks:

Converted to Well: Yes ____ No X Well I.D. #: ____

Tetra Tech NUS, Inc.

BORING LOG

PROJECT NAME: NSWC CRANE
PROJECT NUMBER: N7141 CTO 10
DRILLING COMPANY: EFS
DRILLING RIG: Geoprobe 54LT

BORING NUMBER: 02SB20
DATE: 7/25/01
GEOLOGIST: K. Henn
DRILLER: A. Certain

Sample No. and Type or RQD	Depth (Ft.) or Run No.	Blows / 6" or RQD (%)	Sample Recovery / Sample Length	Lithology Change (Depth /Ft.) or Screened Interval	MATERIAL DESCRIPTION: Soil Density/ Consistency or Rock Hardness	Color	Material Classification	USCS*	Remarks	PID/FID Reading (ppm): Sample	Sampler BZ	Borehole**	Driller BZ**
S1	1			1.0	dense	lt. g.	Road gravel	GW	dry Fill?	0			
0-4	2				stiff	lt.	silty clay, mottled						
	3					br	trace organic		dry Fill?	0			
	4					to	matter						
S-2	5					or.			damp Fill?	0			
	6			6.0		br.							
	7				stiff		clayey silt and sand	ML	wet damp wet material	0			
	8			8.0			tr. rock frags						
	9												
	10												
	11						Bottom of boring						
	12						@ 8.0'						
	13												
	14												
	15												
	16												
	17												
	18												
	19												
	20												
						SAMPLED: 02SS 20 0001 02SS 20 0002							
						SAMPLED: 02SB 200608							

* When rock coring, enter rock brokeness.

** Include monitor reading in 6 foot intervals @ borehole. Increase reading frequency if elevated reponse read.

Drilling Area Background (ppm): 0

Remarks:

Converted to Well: Yes ____ No X Well I.D. #: ____

BORING LOG
FIELD DATA

Project NWSC Groundwater Study Site Crane, IN Date 26 Aug 81
Location Dye Burial Grounds Job No. 441-G150.11GR21/22
Drill Rig Failing Inspector J. Dunbar Operator C. Drake Surface El 738.66 Boring No. WES-2-1-81

SAMPLE NUMBER	DATE TAKEN 1981	STRATUM FROM	STRATUM TO	DRIVE FROM	DRIVE TO	SAMPLE FROM	SAMPLE TO	TYPE OF SAMPLER	Hyd. Press.	Cont.	CLASSIFICATION AND REMARKS
1A	26 Aug	0.0		0.0	0.5	0.0	0.92	3" Shelby Tube	0	Jar	Clay (CL): Brown in color, soft,
1				0.5	1.0	0.92	1.87		0	S.T.	low plasticity, & slight organic
				1.0	1.5				10		matter.
				1.5	2.0				30		Sample length: 1.97 ft
			6.0	2.0	2.5				100		
				0.0	5.0	--------		7" Folding Auger	------		Cleanout
2A	26 Aug	6.0	7.17	5.0	5.5	5.0	6.0	3" Fixed Piston Sampler	0	Jar	Sandy silt (SM) & sandstone frag-
2				5.5	6.0	6.0	6.95		20	S.T.	ments: brown in color, slightly
				6.0	6.5				380		sticky, & contains 25% weathered
				6.5	7.0				700		sandstone. Sandstone is light
				7.0	7.17				800		brown to grey in color, uniform,
											fine-grained, dry, & friable.
											Sample length: 1.95 ft

WES FORM 1 74 819 EDITION OF NOV 1971 MAY BE USED

BORING LOG
FIELD DATA

Project _____ Site _____ Date _____
Location _____ Job No. _____
Drill Rig _____ Inspector _____ Operator _____ Surface El _____ Boring No. WES-2-1-81

SAMPLE NUMBER	DATE TAKEN	STRATUM FROM	STRATUM TO	DRIVE FROM	DRIVE TO	SAMPLE FROM	SAMPLE TO	TYPE OF SAMPLER			CLASSIFICATION AND REMARKS
	26 Aug	7.17	11.5	5.0	7.17	----	----	7" Folding Auger	----	----	Cleanout: weathered sandstone starts at 7.17 ft
	26 Aug	11.5	30.0	7.17	30.0	----	----	5-5/8" Rock Bit	----	----	Hard sandstone at 11.5 ft. Water at approximately 20 ft. Cleanout to 10 ft below water, blew hole dry of water & cuttings. Installed well screen.

WES FORM 1 JUL 74 819 EDITION OF NOV 1971 MAY BE USED

Sheet 2 of 2 Sheets

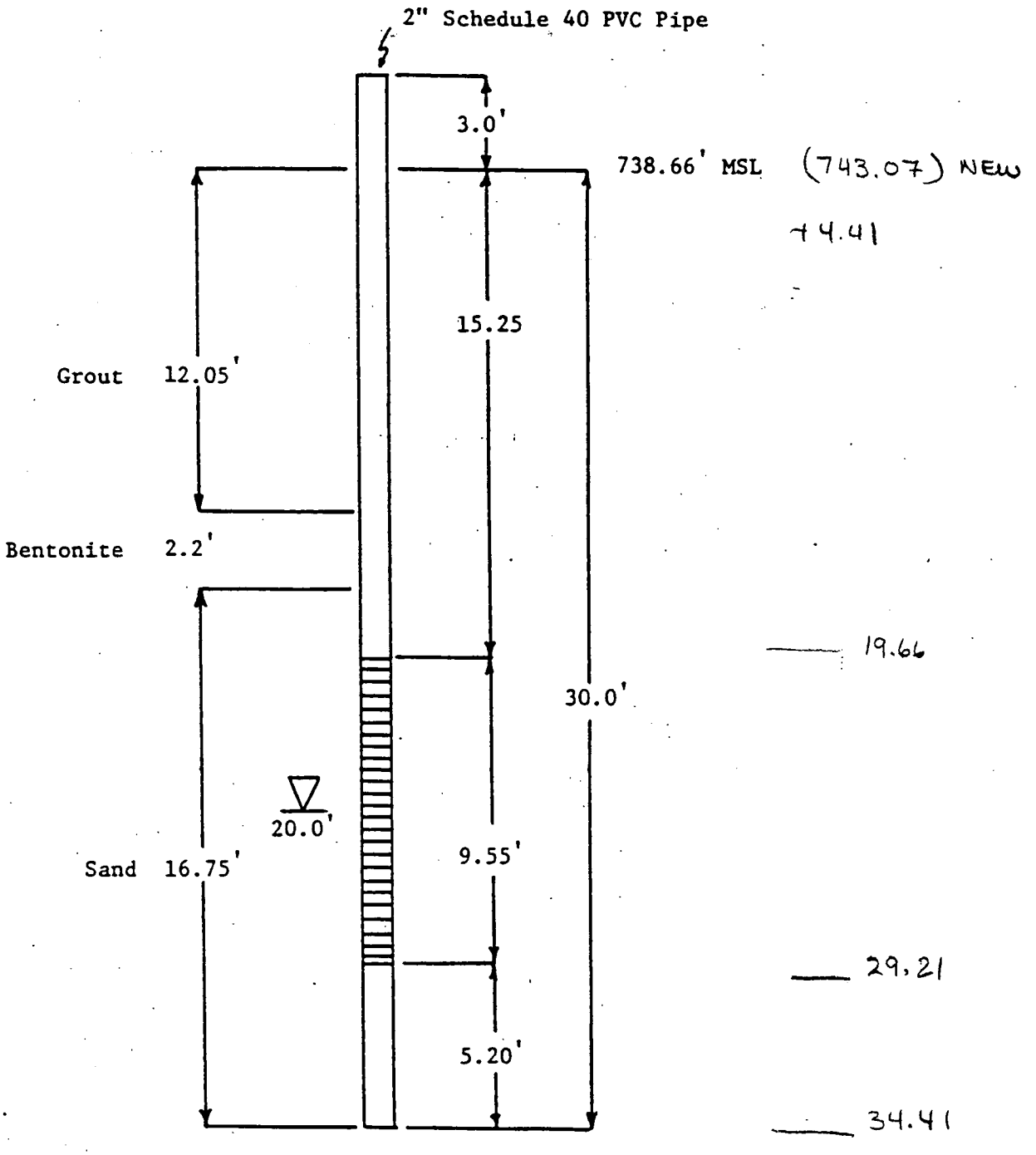

Water depth at time of drilling

Well screen

NWSC, Crane, Indiana
Dye Burial Grounds
Well Completion
Boring Number: WES-2-1-81

BORING LOG
FIELD DATA

Project NWSC Groundwater Study Site Crane, IN Date 26 Aug 81
Location Dye Burial Grounds Job No. 441-G150.11GR21/22
Drill Rig Failing Inspector J. Dunbar Operator C. Drake Surface El 725.46 Boring No. WES-2-2-81

SAMPLE NUMBER	DATE TAKEN	STRATUM FROM	STRATUM TO	DRIVE FROM	DRIVE TO	SAMPLE FROM	SAMPLE TO	TYPE OF SAMPLER	Hyd. Press.	Cont.	CLASSIFICATION AND REMARKS
1	26 Aug	0.0		0.0	0.5	0.0	1.65	3" Shelby Tube	40	S.T.	Silt (ML): brown in color, soft,
1A				0.5	1.0	1.65	2.5		75	Jar	slightly sticky, dry, & contains
				1.0	1.5				140		organic matter.
				1.5	2.0				180		Sample length: 2.5 ft
			5.0	2.0	2.5				230		
				0.0	5.0	------	------	7" Folding Auger	------		Cleanout
2A	26 Aug	5.0		5.0	5.5	5.0	6.05	3" Fixed Piston Sampler	40	Jar	Silt (ML) & weathered sandstone:
				5.5	6.0				700		brown to brownish white in color
			6.05	6.0	6.05				800		& dry. Sandstone is fine-grained,
											uniform, & friable. Slight dry
											green film found on soil sample.
											Sample length: —
	26 Aug	6.05		5.0	6.1	------	------	5-5/8" Rock Bit	------		Cleanout

WES FORM 819 EDITION OF NOV 1971 MAY BE USED Sheet 1 of 8 Sheets

NO Extra jar sample made for NWSC

BORING LOG
FIELD DATA

Project _____ Site _____ Date _____
Location _____ Job No. _____
Drill Rig _____ Inspector _____ Operator _____ Surface El _____ Boring No. WES-2-2-81

SAMPLE NUMBER	DATE TAKEN	STRATUM		DRIVE		SAMPLE		TYPE OF SAMPLER			CLASSIFICATION AND REMARKS
		FROM	TO	FROM	TO	FROM	TO				
	26 Aug	6.05		6.1	6.7	------	------	3" Pitcher Sam.	200	--	Fragments of weathered sandstone
											Continued on Eng Form 1836, page 3.
											Will use 4x5-1/2 in. core barrel.

WES FORM JAN 74 819 EDITION OF NOV 1971 MAY BE USED

Sheet 2 of 8 Sheets

Hole No. WES -2-2-R1

DRILLING LOG	DIVISION	INSTALLATION	SHEET 4 OF 8 SHEETS

1. PROJECT	10. SIZE AND TYPE OF BIT
2. LOCATION (Coordinates or Station)	11. DATUM FOR ELEVATION SHOWN (TBM or MSL)
3. DRILLING AGENCY	12. MANUFACTURER'S DESIGNATION OF DRILL
4. HOLE NO. (As shown on drawing title and file number)	13. TOTAL NO. OF OVER-BURDEN SAMPLES TAKEN — DISTURBED — UNDISTURBED
5. NAME OF DRILLER	14. TOTAL NUMBER CORE BOXES
6. DIRECTION OF HOLE ☐ VERTICAL ☐ INCLINED ____ DEG. FROM VERT.	15. ELEVATION GROUND WATER
7. THICKNESS OF OVERBURDEN	16. DATE HOLE — STARTED — COMPLETED
8. DEPTH DRILLED INTO ROCK	17. ELEVATION TOP OF HOLE
9. TOTAL DEPTH OF HOLE	18. TOTAL CORE RECOVERY FOR BORING %
	19. SIGNATURE OF INSPECTOR

ELEVATION a	DEPTH b	LEGEND c	CLASSIFICATION OF MATERIALS (Description) d	% CORE RECOVERY e	BOX OR SAMPLE NO. f	REMARKS (Drilling time, water loss, depth of weathering, etc., if significant) g
715.46	10.0		Sandstone: see below			
714.46	11.0					
			Run 1			27 August 1981
713.46	12.0		closed break			WL - Run 2 Began 9:15 Rec 3.65' End 10:20 Loss - Time 65 min Gain - Drl time 40 min Hyd press 100-120 psi Water press - RPM 75± Drl Action Smooth Water rst Brown
712.46	13.0		Sandstone interbedded with seams of clay, siltstone, limonite, lignite, and peat. Core ranges in color from shades of brown, orange and red to various shades of grey. Grain size is uniform and ranges from very fine to fine with quartz grains predominating. Material is dry, friable, and weathered. Bedding is distinct with thickness ranging from ¼ in. to 8 in. maximum.			
711.46	14.0					Bit blocked off.
710.46	15.0			100%	--	
			Run 2			
			fractured			
709.46	16.0					Run 3 Began 10:40 Rec 4.15' End 11:10 Loss - Time 30 min Gain - Drl time 30 min Hyd press 100-200 psi Water press - RPM 75± Drl Action Smooth Water rst Brown
708.46	17.0		Sandstone: same	100%	--	Remarks -
707.46	18.0		closed break			
706.46	19.0					
			Run 3			
705.46	20.0		No recovery			

ENG FORM 1836 MAR 71 PREVIOUS EDITIONS ARE OBSOLETE. (TRANSLUCENT)

PROJECT | HOLE NO.

Hole No. WES-2-2-81

DRILLING LOG	DIVISION	INSTALLATION	SHEET 6 OF 8 SHEETS

1. PROJECT	10. SIZE AND TYPE OF BIT
2. LOCATION (Coordinates or Station)	11. DATUM FOR ELEVATION SHOWN (TBM or MSL)
3. DRILLING AGENCY	12. MANUFACTURER'S DESIGNATION OF DRILL
4. HOLE NO. (As shown on drawing title and file number)	13. TOTAL NO. OF OVER-BURDEN SAMPLES TAKEN: DISTURBED / UNDISTURBED
5. NAME OF DRILLER	14. TOTAL NUMBER CORE BOXES
6. DIRECTION OF HOLE ☐ VERTICAL ☐ INCLINED ____ DEG. FROM VERT.	15. ELEVATION GROUND WATER
7. THICKNESS OF OVERBURDEN	16. DATE HOLE: STARTED / COMPLETED
8. DEPTH DRILLED INTO ROCK	17. ELEVATION TOP OF HOLE
9. TOTAL DEPTH OF HOLE	18. TOTAL CORE RECOVERY FOR BORING %
	19. SIGNATURE OF INSPECTOR

ELEVATION a	DEPTH b	LEGEND c	CLASSIFICATION OF MATERIALS (Description) d	% CORE RECOVERY e	BOX OR SAMPLE NO. f	REMARKS (Drilling time, water loss, depth of weathering, etc., if significant) g
695.46	30.0		fractured			WL - Run 8 Began 3:30 Rec 2.0' End 4:15 Lost 0.9' Time 45 min Gain - Drl time 40 min Hyd press 150 psi Water press - RPM 50± Drl Action Very rough Water ret -
694.46	31.0		Sandstone: same except very hard.	83.0%	--	
			clay/silt: grey and soft Run 9			
693.46	32.0		From 32.0 to 32.25 - grey sandstone			Remarks Bit blocked off.
692.46	33.0		Sandstone interbedded with seams of grey shale(1/32 to 1/2 in.). Sandstone is grey to orange brown in color, hard, and fine-grained.			WL - Run 9 Began 4:20 Rec 1.7' End 4:40 Lost 0.35' Time 20 min Gain - Drl time 20 min Hyd press 200 psi Water press - RPM 50-100 ± Drl Action Smooth Water ret -
691.46	34.0		Sandstone from 34.0 to 35.0 is dark grey in color.			
690.46	35.0		Sandstone from 35.0 to 37.8 is light brown to orange brown and contains no shale seams.			Remarks Bit blocked off. 28 August 1981
689.46	36.0			100.0%	--	WL - Run 10 Began 9:26 Rec 4.85' End 11:06 Lost - Time 100 min Gain - Drl time 90 min Hyd press 80-100 Water press - RPM 35 ± Drl Action Smooth Water ret -
			Run 10			
688.46	37.0					Remarks -
687.46	38.0		fractured	100.0%	--	WL - Run 11 Began 11:20 Rec 4.2' End 1:30 Lost - Time 130 min Gain - Drl time 120 min Hyd press 100-150 psi Water press - RPM 35 ± Drl Action Smooth Water ret -
686.46	39.0		1/16 in. lignite			
685.46	40.0		Sandstone and shale: orange brown sandstone from 1/16 to 3 in. and grey shale from 1/16 to 1 in. thickness. fractured			Remarks -

ENG FORM 1836 MAR 71 PREVIOUS EDITIONS ARE OBSOLETE. (TRANSLUCENT)

PROJECT | HOLE NO.

Hole No. WES-2-2-81

DRILLING LOG	DIVISION	INSTALLATION	SHEET 8 OF 8 SHEETS

1. PROJECT	10. SIZE AND TYPE OF BIT
2. LOCATION (Coordinates or Station)	11. DATUM FOR ELEVATION SHOWN (TBM or MSL)
3. DRILLING AGENCY	12. MANUFACTURER'S DESIGNATION OF DRILL
4. HOLE NO. (As shown on drawing title and file number)	13. TOTAL NO. OF OVER-BURDEN SAMPLES TAKEN: DISTURBED / UNDISTURBED
5. NAME OF DRILLER	14. TOTAL NUMBER CORE BOXES
6. DIRECTION OF HOLE ☐ VERTICAL ☐ INCLINED ____ DEG. FROM VERT.	15. ELEVATION GROUND WATER
	16. DATE HOLE: STARTED / COMPLETED
7. THICKNESS OF OVERBURDEN	17. ELEVATION TOP OF HOLE
8. DEPTH DRILLED INTO ROCK	18. TOTAL CORE RECOVERY FOR BORING %
9. TOTAL DEPTH OF HOLE	19. SIGNATURE OF INSPECTOR

ELEVATION a	DEPTH b	LEGEND c	CLASSIFICATION OF MATERIALS (Description) d	% CORE RECOVERY e	BOX OR SAMPLE NO. f	REMARKS (Drilling time, water loss, depth of weathering, etc., if significant) g
675.46	50.0		Shale(70%) with interbedded sandstone(30%)			MC- Run 14 Began 2:00 Rec 4.5' End 3:40 Loss 1.0' Time 90 min Gain - Drl time 90 min Hyd press 300 psi Water press - RPM 70 Drl Action Smooth Water retBrown Remarks-
674.46	51.0		0.15 ft dark grey shale			
			Shale: green in color, uniform, brittle, and soft.			
673.46	52.0			81.8%	--	
			Highly fractured - possibly mechanical/ machine fractured.			
672.46	53.0					
			Run 14			
			Recovered core to approximately 53.5 ft.			
671.46	54.0					
			End depth is 54.5 ft			
670.46	55.0		Blew hole dry of all water. Ran air for approximately one hour to remove water. Will monitor in morning to see if water is coming in. Water level rose to 43.0 ft overnight. Blew hole and installed well screen.			

ENG FORM 1836 MAR 71 PREVIOUS EDITIONS ARE OBSOLETE. (TRANSLUCENT)

PROJECT | HOLE NO.

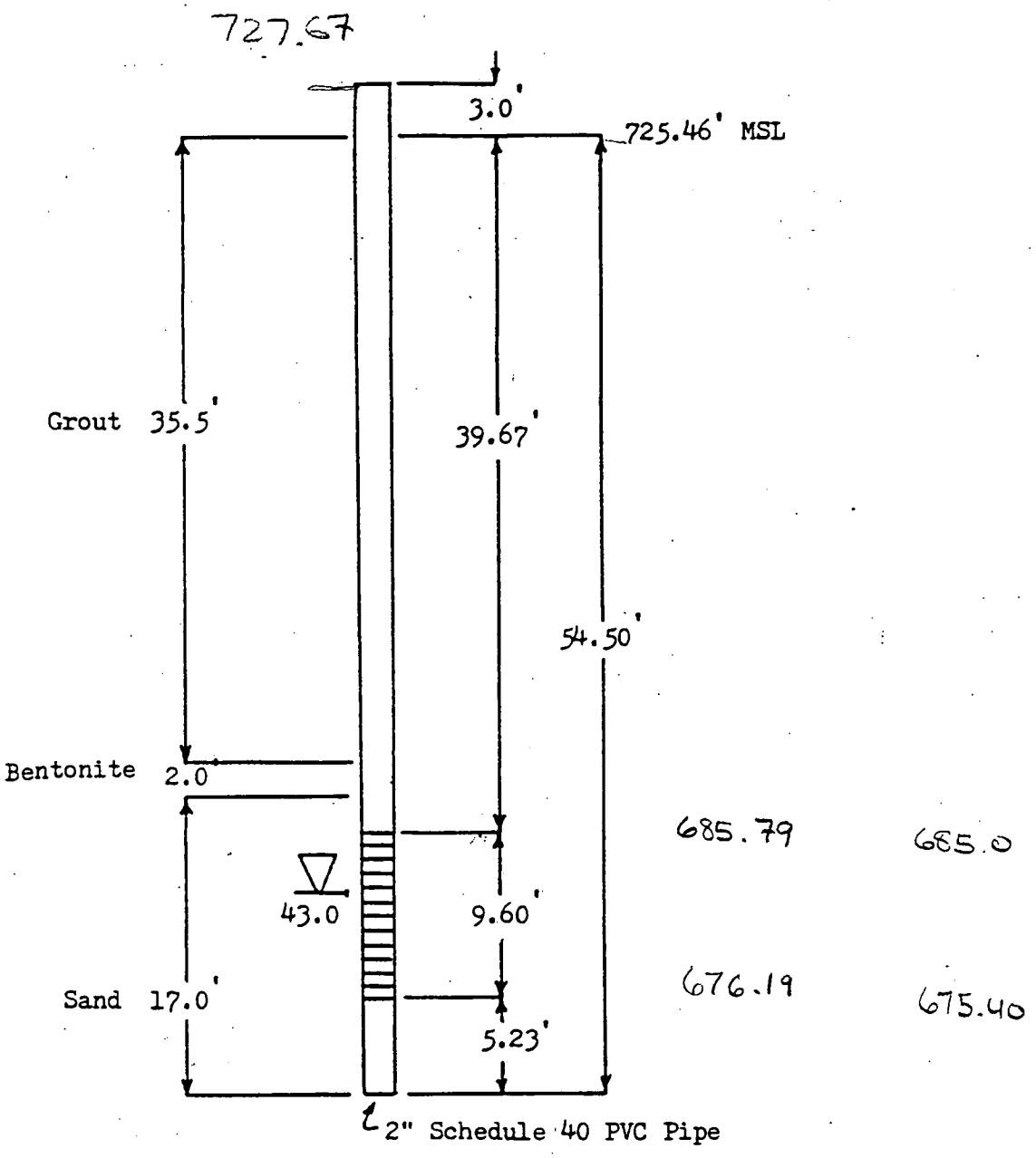

Water depth at time of drilling

Well screen

NWSC, Crane, Indiana
Dye Burial Grounds
Well Completion
Boring Number: WES-2-2-81

BORING LOG
FIELD DATA

Project NWSC Groundwater Study Site Crane, IN Date 3 Sep 81
Location Dye Burial Grounds Job No. 441-G150.11GR21/22
Drill Rig Failing Inspector J. Dunbar Operator C. Drake Surface El 720.02 Boring No. WES-2-3-81

SAMPLE NUMBER	DATE TAKEN 1981	STRATUM FROM	STRATUM TO	DRIVE FROM	DRIVE TO	SAMPLE FROM	SAMPLE TO	TYPE OF SAMPLER	Hyd. Press.	Cont.	CLASSIFICATION AND REMARKS
1	3 Sep	0.0		0.0	0.5	0.0	1.15	3" Shelby Tube	0	S.T.	Clay (CL): Brown in color, dry,
1A				0.5	1.0	1.15	1.45		20	Jar	crumbles easily & contains frag-
				1.0	1.5				150		ments of weathered sandstone.
				1.5	2.0				300		Sample length: 1.45 ft
			2.5	2.0	2.5				350		Tube damaged in push.
				0.0	5.0	----------		7" Folding Auger	-------		Cleanout: assumed change at 2.5'
2A	3 Sep	2.5	5.65	50.	5.65	5.0	5.65	3" Pitcher Sampler	700	Jar	Clayey sand (SC) & fragments of
											sandstone: brown in color, dry,
											friable, uniform, & very fine-grained.
	3 Sep			5.0	66.2	----------		5-5/8" Rock Bit	-------		Cleanout: possible moisture at
											19.4 ft. Drilling indicates 0.2
											to 0.4 ft cavity at this depth.
											Checked hole for water and negative
											results. Removed small root from rock bit.

WE[illegible] FORM 819 EDITION OF NOV 1971 MAY BE USED Sheet 1 of 2 SH[illegible]
NO[illegible] Extra jar sample made for NWSC

BORING LOG
FIELD DATA

Project _____ Site _____ Date _____
Location _____ Job No. _____
Drill Rig _____ Inspector _____ Operator _____ Surface El _____ Boring No. WES-2-3-81

SAMPLE NUMBER	DATE TAKEN	STRATUM		DRIVE		SAMPLE		TYPE OF SAMPLER			CLASSIFICATION AND REMARKS
		FROM	TO	FROM	TO	FROM	TO				
		5.65	43.7								Sandstone: brown, fine-grained
		43.7	54.7								Shale: grey/green color
		54.7	64.2								Sandstone: red/purple, fine-grained
											Limestone: grey, very hard
		64.2	66.2								
											Water level overnight rose to
											55.8 ft. Suspect water coming in
											at 54.7 ft. Blew hole dry and in-
											stalled well screen.

WES FORM JAN 74 819 EDITION OF NOV 1971 MAY BE USED

Sheet 2 of 2 Sheets

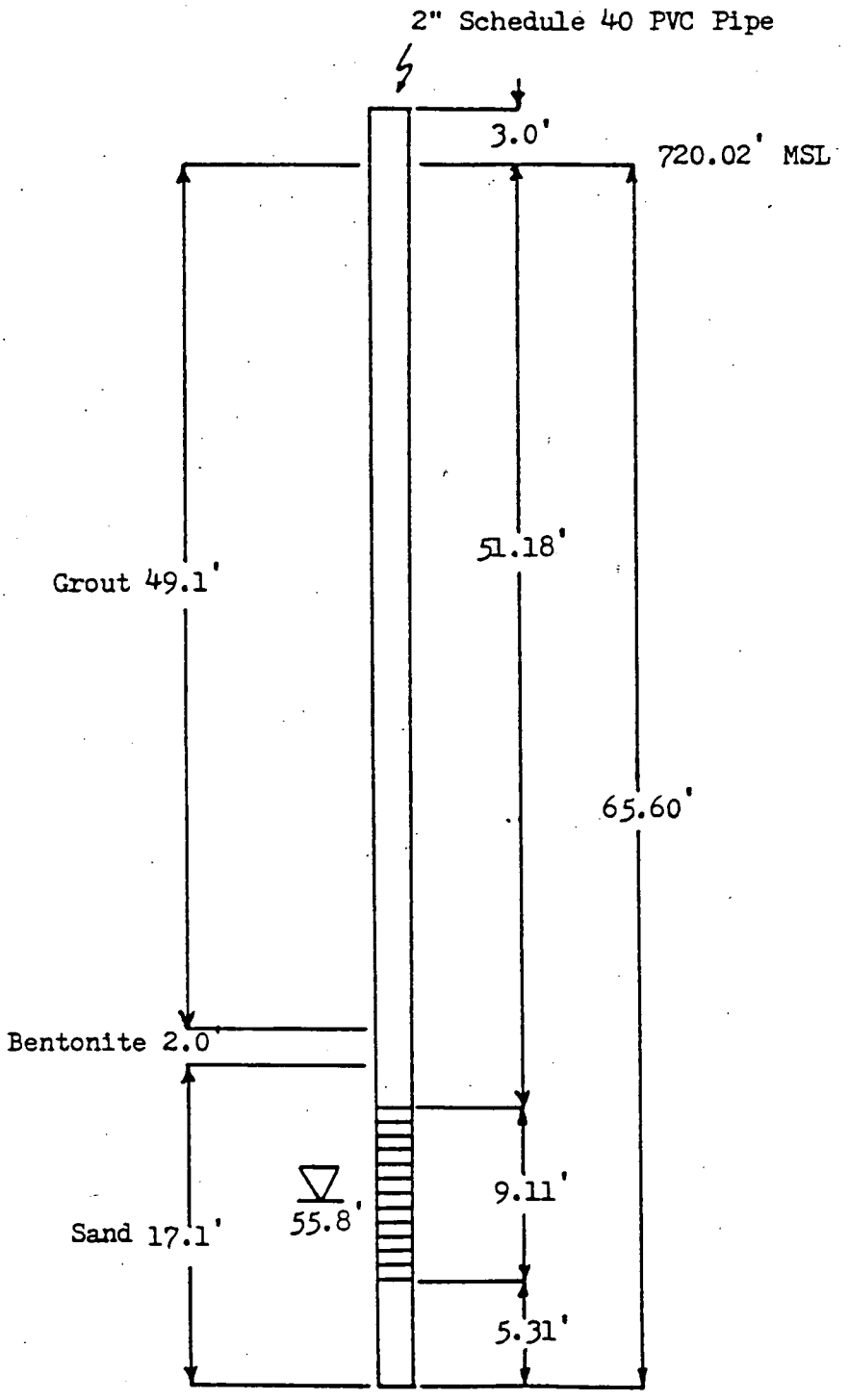

Water depth at time of drilling

Well screen

NWSC, Crane, Indiana
Dye Burial Grounds
Well Completion
Boring Number: WES-2-3-81

BORING LOG
FIELD DATA

Project NWSC Groundwater Study Site Crane, IN Date 4 Sep 81
Location Dye Burial Grounds Job No. 441-G150.11GR21/22
Drill Rig Failing Inspector J. Dunbar Operator C. Drake Surface El 716.66 Boring No. WES-2-4-81

SAMPLE NUMBER	DATE TAKEN 1981	STRATUM FROM	STRATUM TO	DRIVE FROM	DRIVE TO	SAMPLE FROM	SAMPLE TO	TYPE OF SAMPLER	Hyd. Press.	Cont.	CLASSIFICATION AND REMARKS
1	4 Sep	0.0		0.0	0.5	0.0	2.2	3" Shelby Tube	20	S.T.	Silt (ML): brown to grey, no
1A				0.5	1.0	2.2	2.5		20	Jar	cohesion, dry, very uniform in
				1.0	1.5				70		grain size, texture, & composition
				1.5	2.0				150		Sample length: 2.5 ft
			3.75	2.0	2.5				300		
				0.0	5.0	----------		7" Folding Auger	----------		Cleanout
2A	4 Sep	3.75		5.0	5.5	5.0	5.65	3" Fixed Piston Samp.	150	Jar	Silt (ML) & fragments of sand-
			5.65	5.5	5.65				700		stone: silt is same as above.
											Sandstone is friable, fine-
											grained, light brown in color.
	4 Sep	5.65	41.5	5.0	31.0	----------		5-5/8" Rock Bit	----------		Sandstone: brown & fine-grained
	5 Sep	41.5	43.0	31.0	50.5	----------		5-5/8" Rock Bit	----------		Shale: green, soft & weathered
		43.0	50.5								Shale: green & hard

WES FORM 74 819 EDITION OF NOV 1971 MAY BE USED

NO Extra jar sample made for NWSC

BORING LOG
FIELD DATA

Project _____ Site _____ Date _____
Location _____ Job No. _____
Drill Rig _____ Inspector _____ Operator _____ Surface El _____ Boring No. WES-2-4-81

SAMPLE NUMBER	DATE TAKEN	STRATUM		DRIVE		SAMPLE		TYPE OF SAMPLER			CLASSIFICATION AND REMARKS
		FROM	TO	FROM	TO	FROM	TO				
											Encountered water at 40.5 ft.
											Drilled 10.0 ft below water.
											Blew cuttings & water from hole.
											Installed well screen.

WES [illegible], 819 EDITION OF NOV 1971 MAY BE USED

Sheet 2 of 2 Sheet

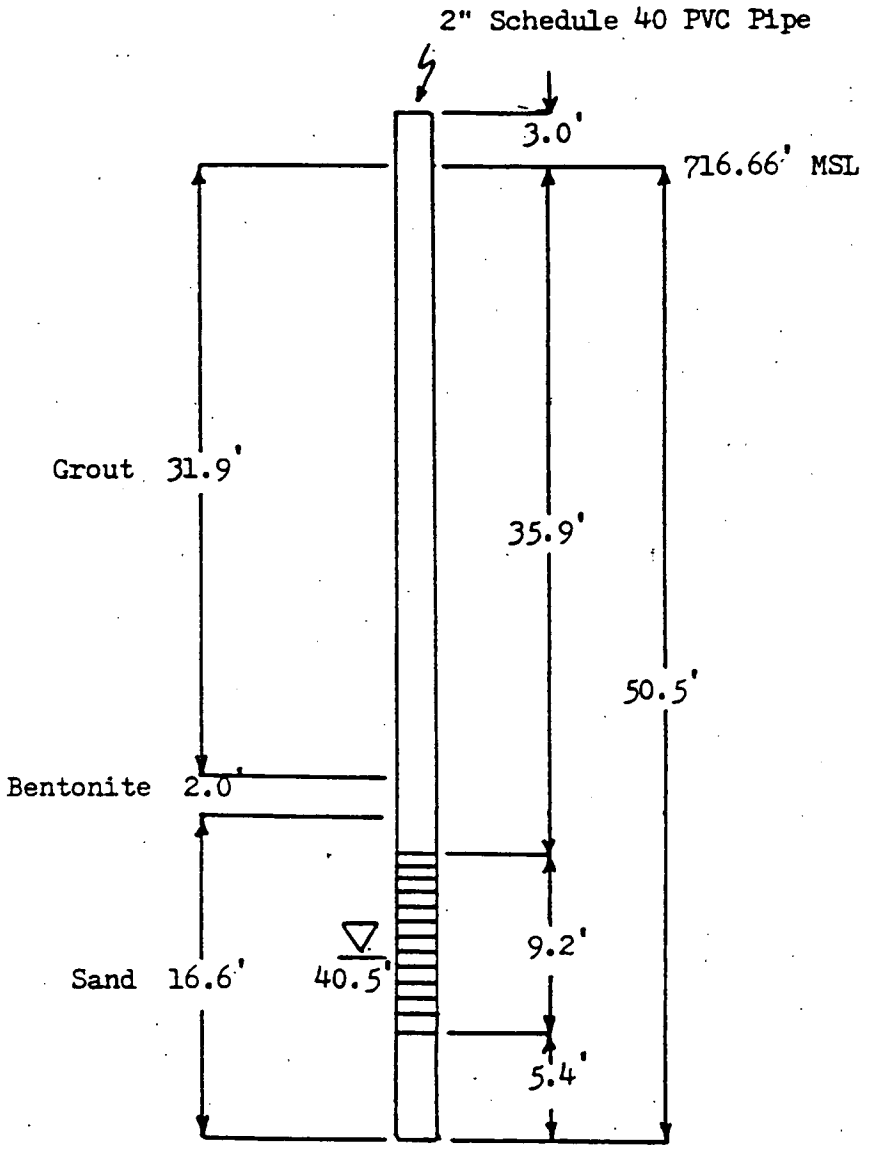

Water depth at time of drilling

Well screen

NWSC, Crane, Indiana
Dye Burial Grounds
Well Completion
Boring Number: WES-2-4-81

BORING LOG
FIELD DATA

Project NWSC Groundwater Study Site Crane, IN Date 5 Sep 81
Location Dye Burial Grounds Job No. 441-G150.11GR21/22
Drill Rig Failing Inspector J. Dunbar Operator C. Drake Surface El 739.24 Boring No. WES-2-5-81

SAMPLE NUMBER	DATE TAKEN 1981	STRATUM FROM	STRATUM TO	DRIVE FROM	DRIVE TO	SAMPLE FROM	SAMPLE TO	TYPE OF SAMPLER	Hyd. Press.	Cont.	CLASSIFICATION AND REMARKS
1	5 Sep	0.0		0.0	0.5	0.0	1.55	3" Shelby Tube	20	S.T.	Clay (CL): brown in color, soft,
1A				0.5	1.0	1.55	1.90		20	Jar	dry, moderately cohesive, & con-
				1.0	1.5				50		tains organic matter.
				1.5	2.0				150		Sample length: 1.9 ft
				2.0	2.5				300		
				0.0	5.0	-----	-----	7" Folding Auger	-----	-----	Cleanout
2	5 Sep			5.0	5.5	5.0	6.1	3" Fixed Piston Sam.	100	S.T.	Clay (CL) & sandstone: clay same
2A				5.5	6.0	6.1	6.45		350	Jar	as above. Sandstone is red in
			6.45	6.0	6.45				750		color, very friable, & fine-grained.
											Sample length: 1.45 ft
	5 Sep	6.45	28.0	5.0	68.8	-----	-----	5-5/8" Rock Bit	-----	-----	Sandstone: red to brown, fine-
		28.0	68.8								grained. Alternating small seams
											of sandstone, shale, & limestone.
											Slightly moist at 30 ft but no water.

WE[illegible] FORM 1 74 819 EDITION OF NOV 1971 MAY BE USED Sheet 1 of 2 Sh[illegible]
NC[illegible]
Extra jar sample was made for NWSC

BORING LOG
FIELD DATA

Project _____ Site _____ Date _____
Location _____ Job No. _____
Drill Rig _____ Inspector _____ Operator _____ Surface El _____ Boring No. WES-2-5-81

SAMPLE NUMBER	DATE TAKEN	STRATUM		DRIVE		SAMPLE		TYPE OF SAMPLER			CLASSIFICATION AND REMARKS
		FROM	TO	FROM	TO	FROM	TO				
											Water level rose overnight to
											55.8 ft. Blew hole of water &
											cuttings. Installed well screen.

WES FORM JAN 74 819 EDITION OF NOV 1971 MAY BE USED

Sheet 2 of 2 Sheets

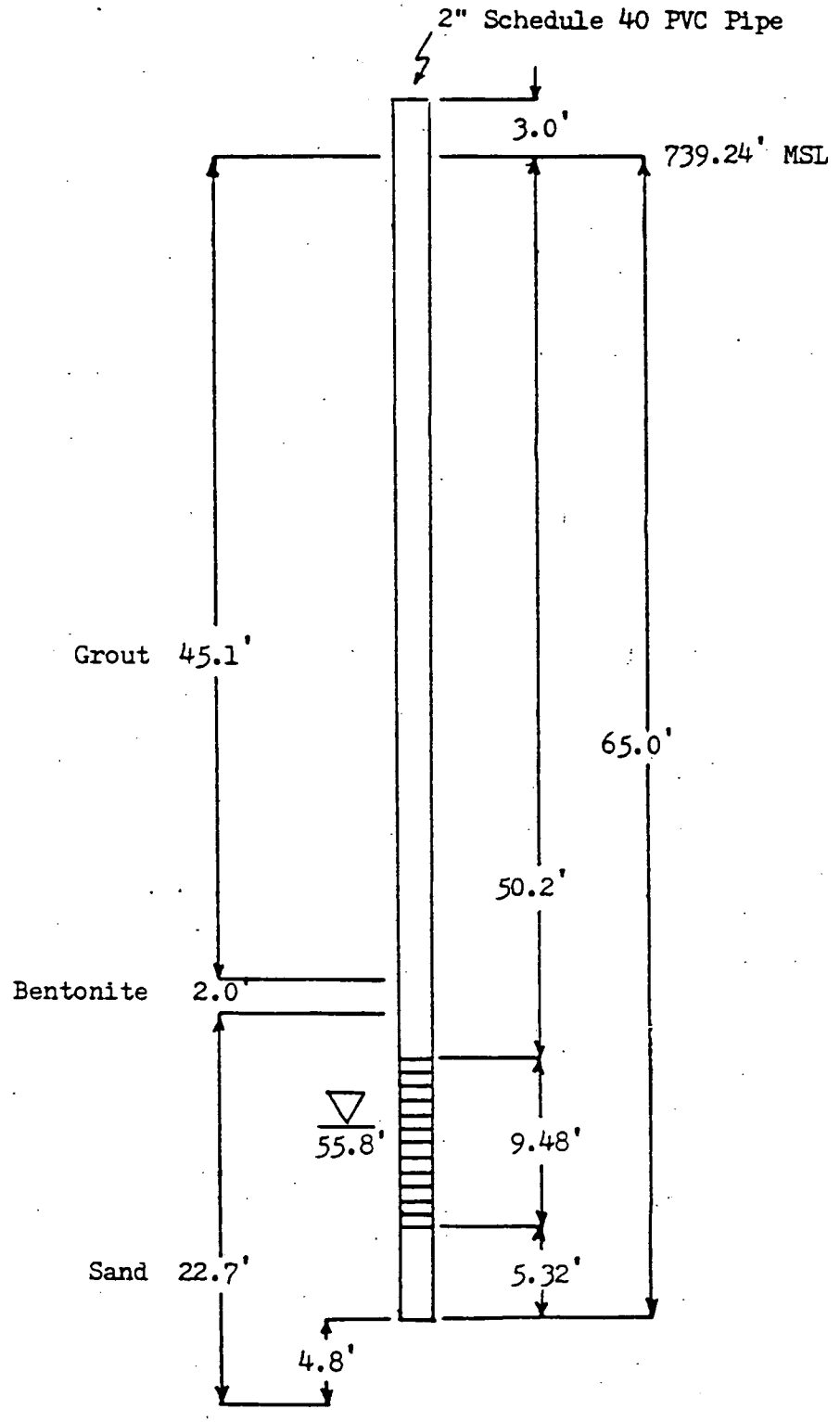

Water depth at time of drilling

Well screen

NWSC, Crane, Indiana
Dye Burial Grounds
Well Completion
Boring Number: WES-2-5-81

BORING LOG
FIELD DATA

Project NWSC Groundwater Study Site Crane, IN Date 23 Sep 81
Location Dye Burial Grounds Job No. 441-G150.11GR21/22
Drill Rig Failing Inspector J. Dunbar Operator C. Drake Surface El 736.58 Boring No. WES-2-6-81

SAMPLE NUMBER	DATE TAKEN 1981	STRATUM FROM	STRATUM TO	DRIVE FROM	DRIVE TO	SAMPLE FROM	SAMPLE TO	TYPE OF SAMPLER	Hyd. Press.	Cont.	CLASSIFICATION AND REMARKS
1	23 Sep	0.0		0.0	0.5	0.0	2.2	3" Shelby Tube	0	S.T.	Clay (CL) - brown to grey in color
1A				0.5	1.0	2.2	2.45		0	Jar	dry, little cohesion, material
				1.0	1.5				10		disturbed by dozer.
				1.5	2.0				100		Sample length: 2.45 ft
				2.0	2.5				140		
1B	23 Sep			0.0	5.0	0.0	5.0	7" Folding Auger	--	Jar	Cleanout: Sample for NWSC -
											material same as above
2	23 Sep			5.0	5.5	5.0	6.33	3" Fixed Piston Sam.	0	S.T.	Clay (CL): same as above.
2A				5.5	6.0	6.33	6.55		20	Jar	Sample length: 1.55 ft
				6.0	6.55				550		
2B	23 Sep		9.0	5.0	9.0	5.0	9.0	7" Folding Auger		Jar	Cleanout: Sample for NWSC -
											material same as above

WES FORM 1 74 819 EDITION OF NOV 1971 MAY BE USED

Sheet 1 of 2 Sh

BORING LOG
FIELD DATA

Project _____ Site _____ Date _____
Location _____ Job No. _____
Drill Rig _____ Inspector _____ Operator _____ Surface El _____ Boring No. WES-2-6-81

SAMPLE NUMBER	DATE TAKEN	STRATUM FROM	STRATUM TO	DRIVE FROM	DRIVE TO	SAMPLE FROM	SAMPLE TO	TYPE OF SAMPLER			CLASSIFICATION AND REMARKS
	23 Sep	9.0	64.0	9.0	50.0	----------		5-5/8" Rock Bit	----------		Sandstone & interbedded shale:
											weathered, brown & dark grey in
											color, soft spot at 37 ft.
											Monitored hole for water at 50 ft
											for 40 min. & negative results.
	23 Sep	64.0	70.63	50.0	70.63	----------		5-5/8" Rock Bit	----------		Continued drilling & between 55
											& 60 ft encountered water.
											Shale: dark grey

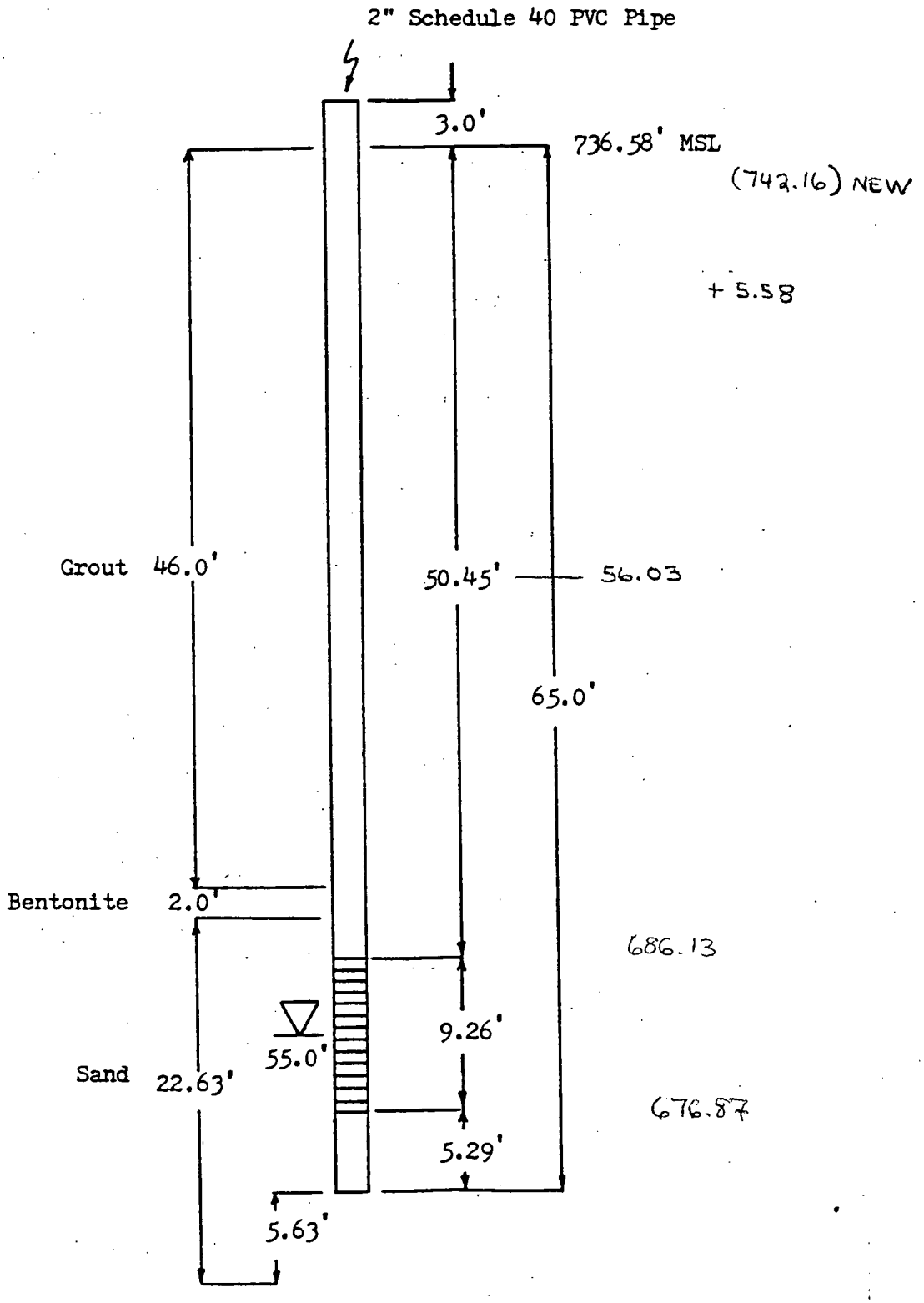

Water depth at time of drilling

Well screen

NWSC, Crane, Indiana
Dye Burial Grounds
Well Completion
Boring Number: WES-2-6-81

BORING LOG
FIELD DATA

Project NWSC Groundwater Study Site Crane, IN Date 24 Sep 81
Location Dye Burial Grounds Job No. 441-G150.11GR21/22
Drill Rig Failing Inspector J. Dunbar Operator C. Drake Surface El 728.73 Boring No. WES-2-7-81

SAMPLE NUMBER	DATE TAKEN 1981	STRATUM FROM	STRATUM TO	DRIVE FROM	DRIVE TO	SAMPLE FROM	SAMPLE TO	TYPE OF SAMPLER	Hyd. Press.	Cont	CLASSIFICATION AND REMARKS
1	24 Sep	0.0		0.0	0.5	0.0	2.0	3" Shelby Tube	0	S.T.	Sandy silt (SM): brown, dry, hard,
1A				0.5	1.0	2.0	2.15		0	Jar	& contains 5% very fine gravel.
				1.0	1.5				0		Possible dozer fill.
				1.5	2.0				20		Sample length: 2.15 ft
			4.0	2.0	2.5				100		
1B	24 Sep			0.0	5.0	0.0	5.0	7" Folding Auger		Jar	Cleanout: Material same as above.
											Sample for NWSC.
	24 Sep	4.0	9.0	5.0	40.0	----------		5-5/8" Rock Bit	----------		Sandstone: brown, weathered
		9.0	51.2								Sandstone & interbedded dark grey
											shale. Sandstone is brown, tan,
											grey & white, hardness varies from
											soft to very hard.
											Slight damp area at 31.3 ft. Drilled
											to 40 ft and monitored hole for
											60 min. with negative results.

WE[illegible] FORM 1 74 819 EDITION OF NOV 1971 MAY BE USED

Sheet 1 of 2 She[illegible]

BORING LOG
FIELD DATA

Project _____ Site _____ Date _____
Location _____ Job No. _____
Drill Rig _____ Inspector _____ Operator _____ Surface El _____ Boring No. WES-2-7-81

SAMPLE NUMBER	DATE TAKEN	STRATUM		DRIVE		SAMPLE		TYPE OF SAMPLER			CLASSIFICATION AND REMARKS
		FROM	TO	FROM	TO	FROM	TO				
	24 Sep	51.2	57.3	40.0	57.3	------	------	5-5/8" Rock Bit	------	------	Water at approximately 46 ft.
											Material changes to dark grey
											shale with interbedded sandstone
											at 51.2 ft.
											Blew hole of water & cuttings.
											Installed well.

WES FORM JAN 74 819 EDITION OF NOV 1971 MAY BE USED

Sheet 2 of 2 Sheets

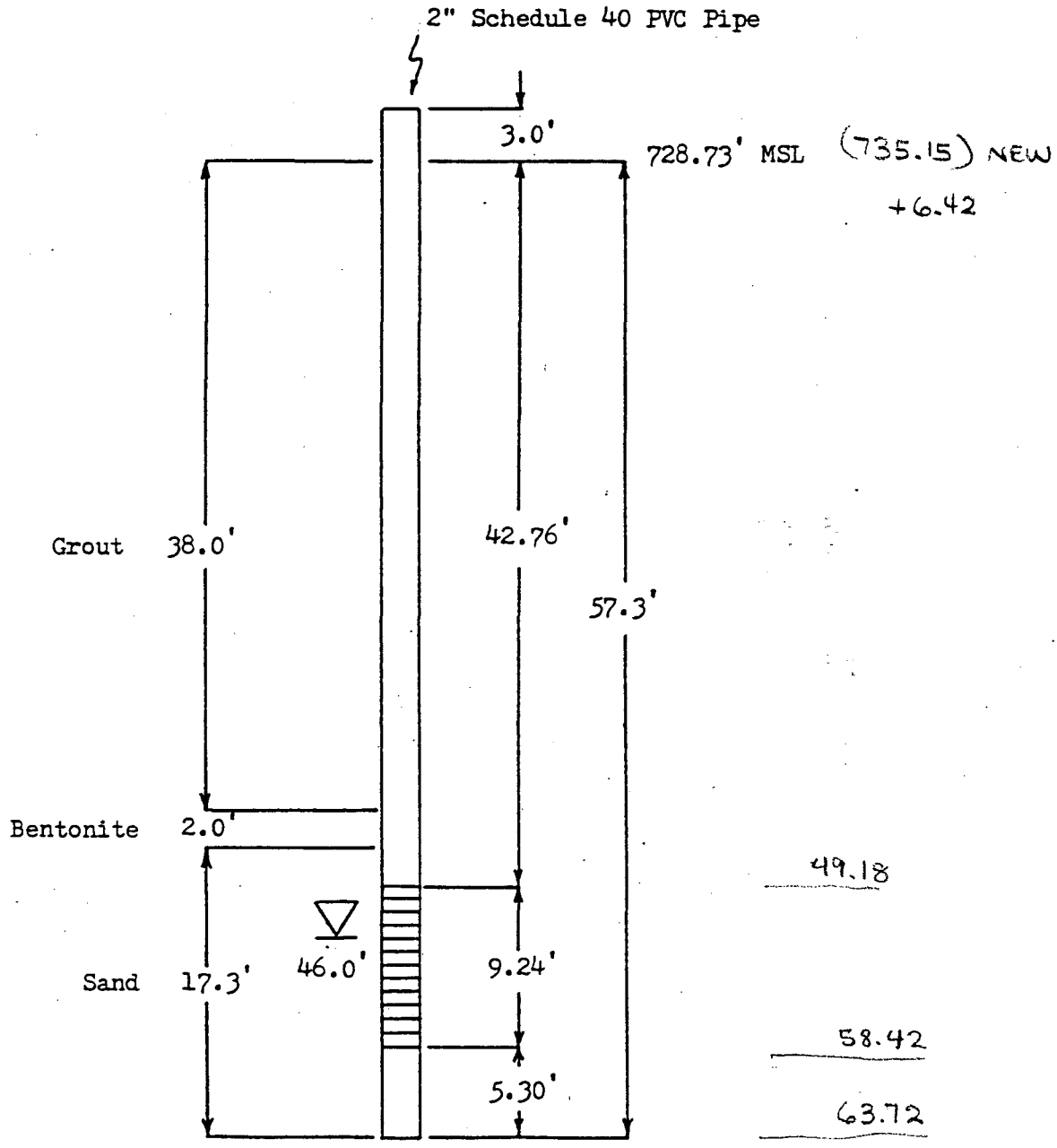

Water depth at time of drilling

Well screen

NWSC, Crane, Indiana
Dye Burial Grounds
Well Completion
Boring Number: WES-2-7-81

BORING LOG
FIELD DATA

Project NWSC Groundwater Study Site Crane, IN Date 25 Sep 81
Location Dye Burial Grounds Job No. 441-G150.11GR21/22
Drill Rig Failing Inspector J. Dunbar Operator C. Drake Surface El 730.29 Boring No. WES-2-8-81

SAMPLE NUMBER	DATE TAKEN 1981	STRATUM FROM	STRATUM TO	DRIVE FROM	DRIVE TO	SAMPLE FROM	SAMPLE TO	TYPE OF SAMPLER	Hyd. Press.	Cont.	CLASSIFICATION AND REMARKS
1	25 Sep	0.0		0.0	0.5	0.0	2.25	3" Shelby Tube	0	S.T.	Silty clay (CL): light brown-brown
1A				0.5	1.0	2.25	2.45		0	Jar	in color, dry, moderate cohesion,
				1.0	1.5				0		uniform, slightly stiff.
				1.5	2.0				40		Sample length: 2.45 ft
				2.0	2.5				60		
1B	25 Sep			0.0	5.0	0.0	5.0	7" Folding Auger		Jar	Cleanout: Sample for NWSC -
											material same as above.
2	25 Sep			5.0	5.5	5.0	6.69	3" Fixed Piston Sam.	0	S.T.	Silty clay (CL): lt. brown to
2A				5.5	6.0	6.69	6.84		10	Jar	brown, dry, stiff, moderate co-
				6.0	6.5				180		hesion, uniform.
				6.5	6.84				800		Sample length: 1.84 ft
1B	25 Sep		6.84	5.0	6.84	5.0	6.84	7" Folding Auger		Jar	Cleanout: sample for NWSC -
											material same as above

WES FORM 819 EDITION OF NOV 1971 MAY BE USED

Sheet 1 of 2 Sheets

BORING LOG
FIELD DATA

Project _____ Site _____ Date _____
Location _____ Job No. _____
Drill Rig _____ Inspector _____ Operator _____ Surface El _____ Boring No. WES-2-8-81

SAMPLE NUMBER	DATE TAKEN	STRATUM FROM	STRATUM TO	DRIVE FROM	DRIVE TO	SAMPLE FROM	SAMPLE TO	TYPE OF SAMPLER			CLASSIFICATION AND REMARKS
	25 Sep	6.84	58.0	6.84	40.0	----	----	5-5/8" Rock Bit	----	----	Sandstone & interbedded dark grey shale: sandstone varies from white, grey, brown to reddish brown. From 30 to 35.7 ft soft and slightly damp. Monitored for water at 40 ft for 40 min. & negative results.
	25 Sep	58.0	60.1	40.0	60.1	----	----	5-5/8" Rock Bit	----	----	Shale: dark grey

WES FORM JAN 74 819 EDITION OF NOV 1971 MAY BE USED

Sheet 2 of 2 Sheets

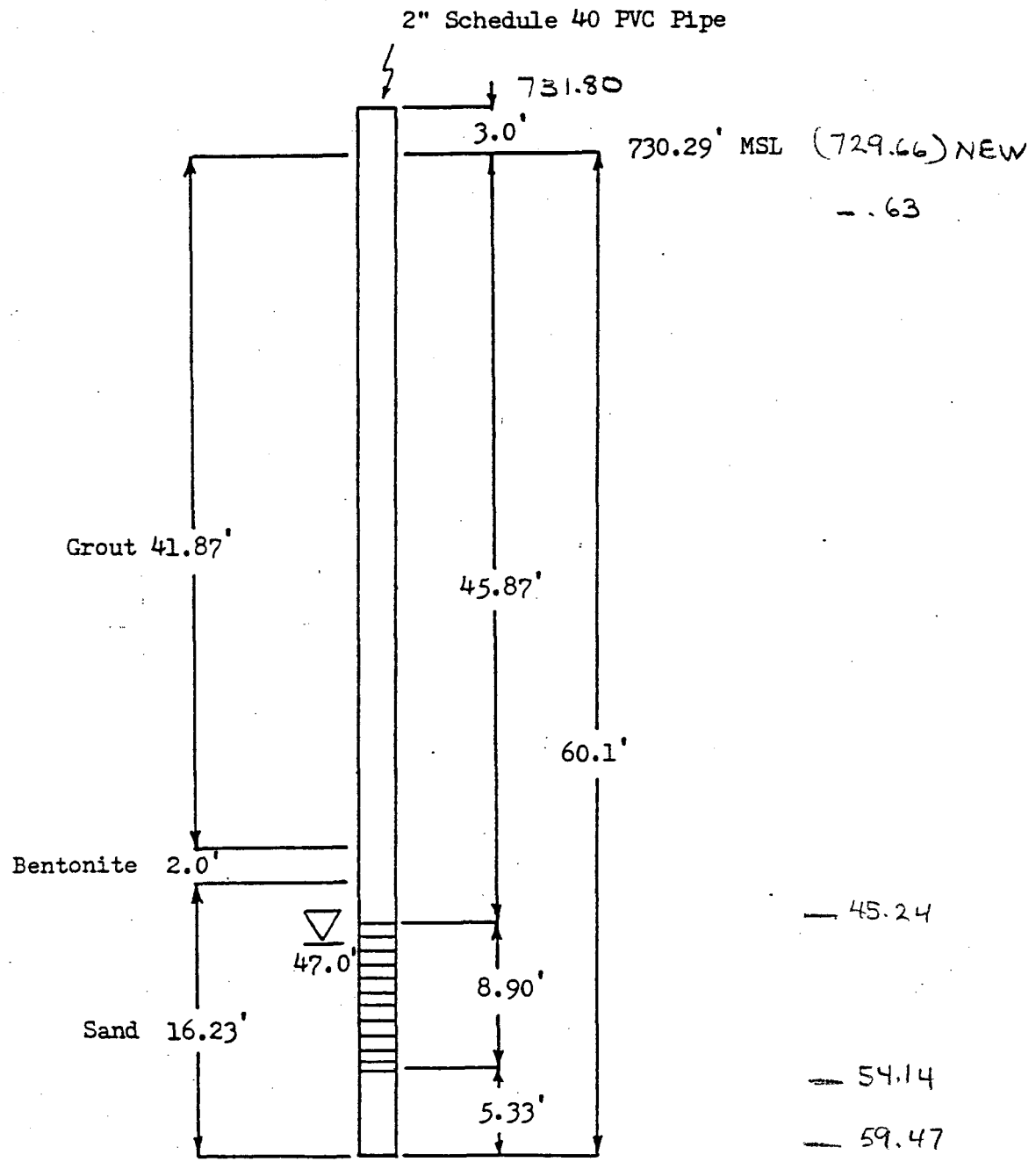

Water depth at time of drilling

Well screen

NWSC, Crane, Indiana
Dye Burial Grounds
Well Completion
Boring Number: WES-2-8-81

Hole No. WES-2-9C-88

DRILLING LOG	DIVISION US Navy	INSTALLATION NWSC, Crane Ind.	SHEET 1 OF 18 SHEETS

1. PROJECT: Hydrogeologic Studies
2. LOCATION (Coordinates or Station): Dye Burial Ground
3. DRILLING AGENCY: WES
4. HOLE NO. (As shown on drawing title and file number): WES-2-9C-88
5. NAME OF DRILLER: Black, Harrield + Don taylor
6. DIRECTION OF HOLE: [✓] VERTICAL [ ] INCLINED ____ DEG. FROM VERT.
7. THICKNESS OF OVERBURDEN: 5.0
8. DEPTH DRILLED INTO ROCK:
9. TOTAL DEPTH OF HOLE: 178.0'
10. SIZE AND TYPE OF BIT: HQ wireline Core
11. DATUM FOR ELEVATION SHOWN (TBM or MSL):
12. MANUFACTURER'S DESIGNATION OF DRILL: Failing 1500
13. TOTAL NO. OF OVER-BURDEN SAMPLES TAKEN: DISTURBED: UNDISTURBED:
14. TOTAL NUMBER CORE BOXES:
15. ELEVATION GROUND WATER:
16. DATE HOLE: STARTED 12/9/87 COMPLETED 1/23/88
17. ELEVATION TOP OF HOLE: 737.83
18. TOTAL CORE RECOVERY FOR BORING: 40.36 T.O.C. %
19. SIGNATURE OF INSPECTOR: Geologist Richard W. Hunt

ELEVATION a	DEPTH b	LEGEND c	CLASSIFICATION OF MATERIALS (Description) d	% CORE RECOVERY e	BOX OR SAMPLE NO. f	REMARKS (Drilling time, water loss, depth of weathering, etc., if significant) g
	0		Clayey Silt, sandy, Br - Y Br, moist in top 1½', firm			Drilled w/a 8" dia. flight auger from 0.0 to 10.8'.
	1		Note: Site of boring is a former timber log loading area. Upper materials appear to be partially fill.			Set 6" dia. PVC surface casing to 10.8'. Cleaned hole to 11.2' w/ 5½" dia R.R. Bit.
	2					Started coring w/ HQ wireline at 11.2 ft.
	3					
	4					
	5		Silty Shale, m olive Gr + tan, th bd, w/ sdy pts + lens, flakey, mod hard			
	6					
	7					
	8					
	9					
	10					

ENG FORM 1836 PREVIOUS EDITIONS ARE OBSOLETE PROJECT HOLE NO.

DRILLING LOG

DIVISION	
INSTALLATION	
SHEET 2 OF 18 SHEETS	
1. PROJECT	
2. LOCATION (Coordinates or Station)	
3. DRILLING AGENCY	
4. HOLE NO. (As shown on drawing title and file number)	
5. NAME OF DRILLER	
6. DIRECTION OF HOLE ☐ VERTICAL ☐ INCLINED _____ DEG. FROM VERT.	
7. THICKNESS OF OVERBURDEN	
8. DEPTH DRILLED INTO ROCK	
9. TOTAL DEPTH OF HOLE	
10. SIZE AND TYPE OF BIT	
11. DATUM FOR ELEVATION SHOWN (TBM or MSL)	
12. MANUFACTURER'S DESIGNATION OF DRILL	
13. TOTAL NO. OF OVER-BURDEN SAMPLES TAKEN	DISTURBED / UNDISTU
14. TOTAL NUMBER CORE BOXES	
15. ELEVATION GROUND WATER	
16. DATE HOLE	STARTED / COMPLETED
17. ELEVATION TOP OF HOLE	
18. TOTAL CORE RECOVERY FOR BORING %	
19. SIGNATURE OF INSPECTOR	

ELEVATION a	DEPTH b	LEGEND c	CLASSIFICATION OF MATERIALS (Description) d	% CORE RECOVERY e	BOX OR SAMPLE NO. f	REMARKS (Drilling time, water loss, depth of weathering, etc., if significant) g
	10		Silty shale (cont)			
	11			11.2		
				Run 1		
	12					
	13					
	14			6.9 / 6.9		
	15					
	16					
	17					
	18			18.1		
				Run 2		
	19			5.3 / 5.3		
	20					

Hole No. WES-2-9C-8

DRILLING LOG	DIVISION	INSTALLATION	SHEET 3 OF 18 SHEETS

1. PROJECT
2. LOCATION (Coordinates or Station)
3. DRILLING AGENCY
4. HOLE NO. (As shown on drawing title and file number)
5. NAME OF DRILLER
6. DIRECTION OF HOLE ☐ VERTICAL ☐ INCLINED _____ DEG. FROM VERT.
7. THICKNESS OF OVERBURDEN
8. DEPTH DRILLED INTO ROCK
9. TOTAL DEPTH OF HOLE
10. SIZE AND TYPE OF BIT
11. DATUM FOR ELEVATION SHOWN (TBM or MSL)
12. MANUFACTURER'S DESIGNATION OF DRILL
13. TOTAL NO. OF OVER-BURDEN SAMPLES TAKEN | DISTURBED | UNDISTURBED
14. TOTAL NUMBER CORE BOXES
15. ELEVATION GROUND WATER
16. DATE HOLE | STARTED | COMPLETED
17. ELEVATION TOP OF HOLE
18. TOTAL CORE RECOVERY FOR BORING %
19. SIGNATURE OF INSPECTOR

ELEVATION a	DEPTH b	LEGEND c	CLASSIFICATION OF MATERIALS (Description) d	% CORE RECOVERY e	BOX OR SAMPLE NO. f	REMARKS (Drilling time, water loss, depth of weathering, etc., if significant) g
	20		Silty shale, (cont.) grades to mGr below ~20 ft.			
	21					
	22					
	23			23.4 / Run 3		
	24					
			Siltstone, mGr, th bd,			
	25					
	26					
	27			9.8 / 10.0		
	28		- soft clayey	>0.2		
			Shale, Blk-vdGr, th bd-mass, carbonaceous, indurated, platey			
	29					
	30					

ENG FORM 1836 PREVIOUS EDITIONS ARE OBSOLETE | PROJECT | HOLE NO.

DRILLING LOG	DIVISION	INSTALLATION	SHEET 4 OF 18 SHEETS

1. PROJECT	10. SIZE AND TYPE OF BIT
2. LOCATION (Coordinates or Station)	11. DATUM FOR ELEVATION SHOWN (TBM or MSL)
3. DRILLING AGENCY	12. MANUFACTURER'S DESIGNATION OF DRILL
4. HOLE NO. (As shown on drawing title and file number)	13. TOTAL NO. OF OVER-BURDEN SAMPLES TAKEN — DISTURBED — UNDISTURBED
5. NAME OF DRILLER	14. TOTAL NUMBER CORE BOXES
6. DIRECTION OF HOLE ☐ VERTICAL ☐ INCLINED _____ DEG. FROM VERT.	15. ELEVATION GROUND WATER
7. THICKNESS OF OVERBURDEN	16. DATE HOLE — STARTED — COMPLETED
8. DEPTH DRILLED INTO ROCK	17. ELEVATION TOP OF HOLE
9. TOTAL DEPTH OF HOLE	18. TOTAL CORE RECOVERY FOR BORING %
	19. SIGNATURE OF INSPECTOR

ELEVATION a	DEPTH b	LEGEND c	CLASSIFICATION OF MATERIALS (Description) d	% CORE RECOVERY e	BOX OR SAMPLE NO. f	REMARKS (Drilling time, water loss, depth of weathering, etc., if significant) g
	30		Shale (cont.)			
	31					
	32					Note: oil formed on water in mud pan while drilling in this shale unit.
	33			33.2 / 33.4	Full	
				Run 4		
	34					
	35					
	36					
	37			10.2 / 10.0		
	38			10.2		
	39					
	40					

ENG FORM 1836 MAR 71 PREVIOUS EDITIONS ARE OBSOLETE. PROJECT HOLE NO.

Hole No. WES-2-9C-2

DRILLING LOG	DIVISION	INSTALLATION	SHEET 5 OF 18 SHEETS

1. PROJECT	10. SIZE AND TYPE OF BIT
2. LOCATION (Coordinates or Station)	11. DATUM FOR ELEVATION SHOWN (TBM or MSL)
3. DRILLING AGENCY	12. MANUFACTURER'S DESIGNATION OF DRILL
4. HOLE NO. (As shown on drawing title and file number)	13. TOTAL NO. OF OVER-BURDEN SAMPLES TAKEN: DISTURBED / UNDISTURBED
5. NAME OF DRILLER	14. TOTAL NUMBER CORE BOXES
6. DIRECTION OF HOLE ☐ VERTICAL ☐ INCLINED ____ DEG. FROM VERT.	15. ELEVATION GROUND WATER
7. THICKNESS OF OVERBURDEN	16. DATE HOLE: STARTED / COMPLETED
8. DEPTH DRILLED INTO ROCK	17. ELEVATION TOP OF HOLE
9. TOTAL DEPTH OF HOLE	18. TOTAL CORE RECOVERY FOR BORING %
	19. SIGNATURE OF INSPECTOR

ELEVATION a	DEPTH b	LEGEND c	CLASSIFICATION OF MATERIALS (Description) d	% CORE RECOVERY e	BOX OR SAMPLE NO. f	REMARKS (Drilling time, water loss, depth of weathering, etc., if significant) g
	40		Shale: (Cont.)			
	41					
	42					
	43			43.4		
				Run 5		
	44					
	45					
	46					
	47			9.7 / 10.0		
	48			0.3 / 0.0		
	49					
	50					

ENG FORM 1836 MAR 71 PREVIOUS EDITIONS ARE OBSOLETE. PROJECT HOLE NO.

Hole No. WBT2-TC-08

DRILLING LOG	DIVISION	INSTALLATION	SHEET 6 OF 18 SHEETS

1. PROJECT	10. SIZE AND TYPE OF BIT
2. LOCATION (Coordinates or Station)	11. DATUM FOR ELEVATION SHOWN (TBM or MSL)
3. DRILLING AGENCY	12. MANUFACTURER'S DESIGNATION OF DRILL
4. HOLE NO. (As shown on drawing title and file number)	13. TOTAL NO. OF OVER-BURDEN SAMPLES TAKEN — DISTURBED — UNDISTURBED
5. NAME OF DRILLER	14. TOTAL NUMBER CORE BOXES
6. DIRECTION OF HOLE ☐ VERTICAL ☐ INCLINED _____ DEG. FROM VERT.	15. ELEVATION GROUND WATER
7. THICKNESS OF OVERBURDEN	16. DATE HOLE — STARTED — COMPLETED
8. DEPTH DRILLED INTO ROCK	17. ELEVATION TOP OF HOLE
9. TOTAL DEPTH OF HOLE	18. TOTAL CORE RECOVERY FOR BORING %
	19. SIGNATURE OF INSPECTOR

ELEVATION a	DEPTH b	LEGEND c	CLASSIFICATION OF MATERIALS (Description) d	% CORE RECOVERY e	BOX OR SAMPLE NO. f	REMARKS (Drilling time, water loss, depth of weathering, etc., if significant) g
	50		Shale (cont.)			
	51					
	52					
	53			53.1 / 53.4		Pull depth
				Run 6		
	54					
	55					
	56			10.2 / 10.0		
	57			~~70.2~~ +0.3		
	58					
	59					
	60					

ENG FORM 1836 PREVIOUS EDITIONS ARE OBSOLETE PROJECT HOLE NO.

Hole No. WES-2-RC-

DRILLING LOG	DIVISION	INSTALLATION	SHEET 7 OF 18 SHEETS

1. PROJECT
2. LOCATION (Coordinates or Station)
3. DRILLING AGENCY
4. HOLE NO. (As shown on drawing title and file number)
5. NAME OF DRILLER
6. DIRECTION OF HOLE ☐ VERTICAL ☐ INCLINED _____ DEG. FROM VERT.
7. THICKNESS OF OVERBURDEN
8. DEPTH DRILLED INTO ROCK
9. TOTAL DEPTH OF HOLE
10. SIZE AND TYPE OF BIT
11. DATUM FOR ELEVATION SHOWN (TBM or MSL)
12. MANUFACTURER'S DESIGNATION OF DRILL
13. TOTAL NO. OF OVER-BURDEN SAMPLES TAKEN | DISTURBED | UNDISTURBED
14. TOTAL NUMBER CORE BOXES
15. ELEVATION GROUND WATER
16. DATE HOLE | STARTED | COMPLETED
17. ELEVATION TOP OF HOLE
18. TOTAL CORE RECOVERY FOR BORING %
19. SIGNATURE OF INSPECTOR

ELEVATION a	DEPTH b	LEGEND c	CLASSIFICATION OF MATERIALS (Description) d	% CORE RECOVERY e	BOX OR SAMPLE NO. f	REMARKS (Drilling time, water loss, depth of weathering, etc., if significant) g
	60		Shale (cont.) grades to dGr + becomes silty toward bot.			
	61					
	62		Alternating v fine Gr sandstone lens + pts.			
	63			63.3 / 63.1 / R447		Full depth
	64					
	65		Conglomeritic shaley sandstone, m-dGr carbonaceous			
	66		silty-sandy shale w/occ ss lens, th bd, hd, dGr			
	67			10.1 / 10.0 / 10.1		
	68		Base of Penn sediments 68.4 ft.			
			Top of miss. sediments (Hardinsburg fm)			- unconformity
	69		Shale, dGn, mass, hd, blocky, occ claystone inclus.			
	70					

ENG FORM 1836 PREVIOUS EDITIONS ARE OBSOLETE. PROJECT HOLE NO.

DRILLING LOG	DIVISION	INSTALLATION	SHEET 3 OF 18 SHEETS

1. PROJECT
2. LOCATION (Coordinates or Station)
3. DRILLING AGENCY
4. HOLE NO. (As shown on drawing title and file number)
5. NAME OF DRILLER
6. DIRECTION OF HOLE ☐ VERTICAL ☐ INCLINED _____ DEG. FROM VERT.
7. THICKNESS OF OVERBURDEN
8. DEPTH DRILLED INTO ROCK
9. TOTAL DEPTH OF HOLE
10. SIZE AND TYPE OF BIT
11. DATUM FOR ELEVATION SHOWN (TBM or MSL)
12. MANUFACTURER'S DESIGNATION OF DRILL
13. TOTAL NO. OF OVER-BURDEN SAMPLES TAKEN | DISTURBED | UNDISTD.
14. TOTAL NUMBER CORE BOXES
15. ELEVATION GROUND WATER
16. DATE HOLE | STARTED | COMPLETED
17. ELEVATION TOP OF HOLE
18. TOTAL CORE RECOVERY FOR BORING %
19. SIGNATURE OF INSPECTOR

ELEVATION a	DEPTH b	LEGEND c	CLASSIFICATION OF MATERIALS (Description) d	% CORE RECOVERY e	BOX OR SAMPLE NO. f	REMARKS (Drilling time, water loss, depth of weathering, etc., if significant) g
	70		Shale (cont.)			
	71					
	72					
	73			73.4 Run 8		
	74					
	75		Shale (grades from above) v dk gr, thin bd, carbonaceous, occ dolive siltstone/claystone nodules, indurated, platey-blocky.			
	76			5.2 / 5.2		
	77					
	78			78.6 Run 9		
	79					
	80					

ENG FORM 1836 PREVIOUS EDITIONS ARE OBSOLETE. PROJECT HOLE NO.

Hole No. WES-2-RC-2

DRILLING LOG	DIVISION	INSTALLATION	SHEET 9 OF 18 SHEETS

1. PROJECT	10. SIZE AND TYPE OF BIT
2. LOCATION (Coordinates or Station)	11. DATUM FOR ELEVATION SHOWN (TBM or MSL)
3. DRILLING AGENCY	12. MANUFACTURER'S DESIGNATION OF DRILL
4. HOLE NO. (As shown on drawing title and file number)	13. TOTAL NO. OF OVER-BURDEN SAMPLES TAKEN — DISTURBED — UNDISTURBED
5. NAME OF DRILLER	14. TOTAL NUMBER CORE BOXES
6. DIRECTION OF HOLE ☐ VERTICAL ☐ INCLINED ____ DEG. FROM VERT.	15. ELEVATION GROUND WATER
7. THICKNESS OF OVERBURDEN	16. DATE HOLE — STARTED — COMPLETED
8. DEPTH DRILLED INTO ROCK	17. ELEVATION TOP OF HOLE
9. TOTAL DEPTH OF HOLE	18. TOTAL CORE RECOVERY FOR BORING %
	19. SIGNATURE OF INSPECTOR

ELEVATION a	DEPTH b	LEGEND c	CLASSIFICATION OF MATERIALS (Description) d	% CORE RECOVERY e	BOX OR SAMPLE NO. f	REMARKS (Drilling time, water loss, depth of weathering, etc., if significant) g
	80		Shale (cont.)			
	81			4.8/4.8		
	82					
	83			83.4 Run 10		
	84					
	85					
	86			9.9/10.0		
	87			0.1		
	88					
	89					
	90					

ENG FORM 1836 PREVIOUS EDITIONS ARE OBSOLETE. PROJECT HOLE NO.

DRILLING LOG	DIVISION	INSTALLATION	SHEET 10 OF 18 SHEETS

1. PROJECT	10. SIZE AND TYPE OF BIT
2. LOCATION (Coordinates or Station)	11. DATUM FOR ELEVATION SHOWN (TBM or MSL)
3. DRILLING AGENCY	12. MANUFACTURER'S DESIGNATION OF DRILL
4. HOLE NO. (As shown on drawing title and file number)	13. TOTAL NO. OF OVER-BURDEN SAMPLES TAKEN — DISTURBED — UNDISTU
5. NAME OF DRILLER	14. TOTAL NUMBER CORE BOXES
6. DIRECTION OF HOLE ☐ VERTICAL ☐ INCLINED _____ DEG. FROM VERT.	15. ELEVATION GROUND WATER
7. THICKNESS OF OVERBURDEN	16. DATE HOLE — STARTED — COMPLETED
8. DEPTH DRILLED INTO ROCK	17. ELEVATION TOP OF HOLE
9. TOTAL DEPTH OF HOLE	18. TOTAL CORE RECOVERY FOR BORING %
	19. SIGNATURE OF INSPECTOR

ELEVATION a	DEPTH b	LEGEND c	CLASSIFICATION OF MATERIALS (Description) d	% CORE RECOVERY e	BOX OR SAMPLE NO. f	REMARKS (Drilling time, water loss, depth of weathering, etc., if significant) g
	90		Shale (cont.)			
	91					
	92					
	93		(93.6') (Base of Hardinsburg fm)	93.4 Run 11		
	94		(Top of Goliaida/Haney fm) Limestone, dGr-grBr, m-c grained, v hd, v dense, fossiliferous, shaley pts in top zone			
	95					
	96		(Base of Goliaida/Haney)			96.5' (641.33)
	97		(Top of Big Clifty fm) (Indian Springs Mem.) Shale, vdGr-Blk, th bd, carbonaceous, indurated, platey	9.0 / 10.0		
	98			1.0		
	99					oil film on pan from this shale zone
	100					

ENG FORM 1836 MAR 71 PREVIOUS EDITIONS ARE OBSOLETE. PROJECT HOLE NO.

Hole No. WES-2-9-C-C

DRILLING LOG	DIVISION	INSTALLATION	SHEET 11 OF 18 SHEETS

1. PROJECT	10. SIZE AND TYPE OF BIT
2. LOCATION (Coordinates or Station)	11. DATUM FOR ELEVATION SHOWN (TBM or MSL)
3. DRILLING AGENCY	12. MANUFACTURER'S DESIGNATION OF DRILL
4. HOLE NO. (As shown on drawing title and file number)	13. TOTAL NO. OF OVER-BURDEN SAMPLES TAKEN — DISTURBED — UNDISTURBED
5. NAME OF DRILLER	14. TOTAL NUMBER CORE BOXES
	15. ELEVATION GROUND WATER
6. DIRECTION OF HOLE ☐ VERTICAL ☐ INCLINED ____ DEG. FROM VERT.	16. DATE HOLE — STARTED — COMPLETED
7. THICKNESS OF OVERBURDEN	17. ELEVATION TOP OF HOLE
8. DEPTH DRILLED INTO ROCK	18. TOTAL CORE RECOVERY FOR BORING %
9. TOTAL DEPTH OF HOLE	19. SIGNATURE OF INSPECTOR

ELEVATION a	DEPTH b	LEGEND c	CLASSIFICATION OF MATERIALS (Description) d	% CORE RECOVERY e	BOX OR SAMPLE NO. f	REMARKS (Drilling time, water loss, depth of weathering, etc., if significant) g
	100		Shale (cont.)			
	101					
	102					
	103			103.4		
				Run 12		
	104			2.7 / 2.7		Reamed hole & set 4" PVC casing to 105.0'
	105					
	106			106.1		
				Run 13		
	107					Jan 21, 1988 started backcoring
	108					
	109			6.9 / 7.0		
				>0.1		
	110					

ENG FORM 1836 MAR 71 PREVIOUS EDITIONS ARE OBSOLETE. PROJECT HOLE NO.

DRILLING LOG	DIVISION	INSTALLATION	SHEET 12 OF 18 SHEETS

1. PROJECT	10. SIZE AND TYPE OF BIT
2. LOCATION (Coordinates or Station)	11. DATUM FOR ELEVATION SHOWN (TBM or MSL)
3. DRILLING AGENCY	12. MANUFACTURER'S DESIGNATION OF DRILL
4. HOLE NO. (As shown on drawing title and file number) 2-9C	13. TOTAL NO. OF OVER-BURDEN SAMPLES TAKEN — DISTURBED — UNDIST
5. NAME OF DRILLER	14. TOTAL NUMBER CORE BOXES
6. DIRECTION OF HOLE ☐ VERTICAL ☐ INCLINED ____ DEG. FROM VERT.	15. ELEVATION GROUND WATER
7. THICKNESS OF OVERBURDEN	16. DATE HOLE — STARTED — COMPLETED
8. DEPTH DRILLED INTO ROCK	17. ELEVATION TOP OF HOLE
9. TOTAL DEPTH OF HOLE	18. TOTAL CORE RECOVERY FOR BORING %
	19. SIGNATURE OF INSPECTOR

ELEVATION a	DEPTH b	LEGEND c	CLASSIFICATION OF MATERIALS (Description) d	% CORE RECOVERY e	BOX OR SAMPLE NO. f	REMARKS (Drilling time, water loss, depth of weathering, etc., if significant) g
	110		Shale (cont.)			
	111					
	112					
	113			113.0 / 113.1 Run 14		Full depth
			- Ls lens			
	114					
	115					
	116					
	117		olive Gr + mass in bot. 2.0'	9.7 / 9.6		
	118			+0.1		
			(Base of Indian Sprs mbr.)			
	119		(Top of Big Hill Ly 35 - 118.7) Sandstone, olive Gr-Tan, th bd - mass v fine grained oxidized friable, shallow ripples, shale cts in Top 4.0'			
	120					

ENG FORM 1836 MAR 71 PREVIOUS EDITIONS ARE OBSOLETE. PROJECT HOLE NO.

Hole No. WES-2-9C-B8

DRILLING LOG	DIVISION	INSTALLATION	SHEET 13 OF 18 SHEETS

1. PROJECT	10. SIZE AND TYPE OF BIT
2. LOCATION (Coordinates or Station)	11. DATUM FOR ELEVATION SHOWN (TBM or MSL)
3. DRILLING AGENCY	12. MANUFACTURER'S DESIGNATION OF DRILL
4. HOLE NO. (As shown on drawing title and file number) 2-9C	13. TOTAL NO. OF OVER-BURDEN SAMPLES TAKEN — DISTURBED — UNDISTURBED
5. NAME OF DRILLER	14. TOTAL NUMBER CORE BOXES
6. DIRECTION OF HOLE ☐ VERTICAL ☐ INCLINED ____ DEG. FROM VERT.	15. ELEVATION GROUND WATER
7. THICKNESS OF OVERBURDEN	16. DATE HOLE — STARTED — COMPLETED
8. DEPTH DRILLED INTO ROCK	17. ELEVATION TOP OF HOLE
9. TOTAL DEPTH OF HOLE	18. TOTAL CORE RECOVERY FOR BORING %
	19. SIGNATURE OF INSPECTOR

ELEVATION a	DEPTH b	LEGEND c	CLASSIFICATION OF MATERIALS (Description) d	% CORE RECOVERY e	BOX OR SAMPLE NO. f	REMARKS (Drilling time, water loss, depth of weathering, etc., if significant) g
	120		SS (cont.)			
	121					
	122					
				122.7 / Run 15		
	123					
	124					
	125					
	126			10.0 / 10.0		
	127					
	128					
	129					
	130					

ENG FORM 1836 MAR 71 PREVIOUS EDITIONS ARE OBSOLETE. PROJECT HOLE NO.

HOLE NO. WES-2-9C-68

DRILLING LOG	DIVISION	INSTALLATION	SHEET 14 OF 18 SHEETS

1. PROJECT	10. SIZE AND TYPE OF BIT
2. LOCATION (Coordinates or Station)	11. DATUM FOR ELEVATION SHOWN (TBM or MSL)
3. DRILLING AGENCY	12. MANUFACTURER'S DESIGNATION OF DRILL
4. HOLE NO. (As shown on drawing title and file number)	13. TOTAL NO. OF OVER-BURDEN SAMPLES TAKEN — DISTURBED — UNDISTU
5. NAME OF DRILLER	14. TOTAL NUMBER CORE BOXES
6. DIRECTION OF HOLE ☐ VERTICAL ☐ INCLINED _____ DEG. FROM VERT.	15. ELEVATION GROUND WATER
7. THICKNESS OF OVERBURDEN	16. DATE HOLE — STARTED — COMPLETED
8. DEPTH DRILLED INTO ROCK	17. ELEVATION TOP OF HOLE
9. TOTAL DEPTH OF HOLE	18. TOTAL CORE RECOVERY FOR BORING %
	19. SIGNATURE OF INSPECTOR

ELEVATION a	DEPTH b	LEGEND c	CLASSIFICATION OF MATERIALS (Description) d	% CORE RECOVERY e	BOX OR SAMPLE NO. f	REMARKS (Drilling time, water loss, depth of weathering, etc., if significant) g
	130		SS (cont.)			
	131					
	132					
				132.7		
				Run 16		
	133					
	134					
	135					
	136			11.0		
				10.0		
	137					
	138					
	139					
	140					

Hole No. WES-2-9C-88

DRILLING LOG	DIVISION	INSTALLATION	SHEET 15 OF 18 SHEETS

1. PROJECT
2. LOCATION (Coordinates or Station)
3. DRILLING AGENCY
4. HOLE NO. (As shown on drawing title and file number): 2-9C
5. NAME OF DRILLER
6. DIRECTION OF HOLE: ☐ VERTICAL ☐ INCLINED _____ DEG. FROM VERT.
7. THICKNESS OF OVERBURDEN
8. DEPTH DRILLED INTO ROCK
9. TOTAL DEPTH OF HOLE
10. SIZE AND TYPE OF BIT
11. DATUM FOR ELEVATION SHOWN (TBM or MSL)
12. MANUFACTURER'S DESIGNATION OF DRILL
13. TOTAL NO. OF OVER-BURDEN SAMPLES TAKEN: DISTURBED / UNDISTURBED
14. TOTAL NUMBER CORE BOXES
15. ELEVATION GROUND WATER
16. DATE HOLE: STARTED / COMPLETED
17. ELEVATION TOP OF HOLE
18. TOTAL CORE RECOVERY FOR BORING %
19. SIGNATURE OF INSPECTOR

ELEVATION a	DEPTH b	LEGEND c	CLASSIFICATION OF MATERIALS (Description) d	% CORE RECOVERY e	BOX OR SAMPLE NO. f	REMARKS (Drilling time, water loss, depth of weathering, etc., if significant) g
	140		SS (cont.)			
	141					
	142					
				142.7 Run 17		
	143					
	144					
	145					
	146			10.1 / 10.1		
	147					
	148					
	149					
	150					

ENG FORM 1836 MAR 71 PREVIOUS EDITIONS ARE OBSOLETE. PROJECT | HOLE NO.

HOLE NO. WES-2-9C-BE

DRILLING LOG	DIVISION	INSTALLATION	SHEET 16 OF 18 SHEETS

1. PROJECT	10. SIZE AND TYPE OF BIT
2. LOCATION (Coordinates or Station)	11. DATUM FOR ELEVATION SHOWN (TBM or MSL)
3. DRILLING AGENCY	12. MANUFACTURER'S DESIGNATION OF DRILL
4. HOLE NO. (As shown on drawing title and file number) 2-9C	13. TOTAL NO. OF OVER-BURDEN SAMPLES TAKEN — DISTURBED — UNDISTURBED
5. NAME OF DRILLER	14. TOTAL NUMBER CORE BOXES
6. DIRECTION OF HOLE ☐ VERTICAL ☐ INCLINED ____ DEG. FROM VERT.	15. ELEVATION GROUND WATER
7. THICKNESS OF OVERBURDEN	16. DATE HOLE — STARTED — COMPLETED
8. DEPTH DRILLED INTO ROCK	17. ELEVATION TOP OF HOLE
9. TOTAL DEPTH OF HOLE	18. TOTAL CORE RECOVERY FOR BORING %
	19. SIGNATURE OF INSPECTOR

ELEVATION a	DEPTH b	LEGEND c	CLASSIFICATION OF MATERIALS (Description) d	% CORE RECOVERY e	BOX OR SAMPLE NO. f	REMARKS (Drilling time, water loss, depth of weathering, etc., if significant) g
	150		SS (cont.)			
	151					
	152					
				152.8 / Run 18		
	153					
	154		Highly oxidized in bot 5-6'			
	155					Note: did not lose drill water
	156			10.1 / 10.1		
	157		Conglomeritic in bot 0.1' (Base of Big Clifty SS)			
	158		(Top of Beech Creek Fm - 157.4') Limestone, 1-m grBr, m crystaline, fossiliferous, v hd, v clen, occ Stylolites.			
	159		oxidized in top zone and along jts.			
	160					

ENG FORM 1836 PREVIOUS EDITIONS ARE OBSOLETE PROJECT HOLE NO.

Hole No. WES-2-9C-28

DRILLING LOG	DIVISION	INSTALLATION	SHEET 17 OF 18 SHEETS

1. PROJECT	10. SIZE AND TYPE OF BIT
2. LOCATION (Coordinates or Station)	11. DATUM FOR ELEVATION SHOWN (TBM or MSL)
3. DRILLING AGENCY	12. MANUFACTURER'S DESIGNATION OF DRILL
4. HOLE NO. (As shown on drawing title and file number) 2-9C	13. TOTAL NO. OF OVER-BURDEN SAMPLES TAKEN — DISTURBED — UNDISTURBED
5. NAME OF DRILLER	14. TOTAL NUMBER CORE BOXES
6. DIRECTION OF HOLE ☐ VERTICAL ☐ INCLINED ____ DEG. FROM VERT.	15. ELEVATION GROUND WATER
7. THICKNESS OF OVERBURDEN	16. DATE HOLE — STARTED — COMPLETED
8. DEPTH DRILLED INTO ROCK	17. ELEVATION TOP OF HOLE
9. TOTAL DEPTH OF HOLE	18. TOTAL CORE RECOVERY FOR BORING %
	19. SIGNATURE OF INSPECTOR

ELEVATION a	DEPTH b	LEGEND c	CLASSIFICATION OF MATERIALS (Description) d	% CORE RECOVERY e	BOX OR SAMPLE NO. f	REMARKS (Drilling time, water loss, depth of weathering, etc., if significant) g
	160		LS (cont.)			
	161					
	162					
	163			162.9 Run 19		
	164					
	165					
	166			10.1 / 10.1		
	167					
	168					
	169					
	170					

ENG FORM 1836 PREVIOUS EDITIONS ARE OBSOLETE. PROJECT HOLE NO.

DRILLING LOG	DIVISION	INSTALLATION	SHEET 18 OF 18 SHEETS

1. PROJECT	10. SIZE AND TYPE OF BIT
2. LOCATION (Coordinates or Station)	11. DATUM FOR ELEVATION SHOWN (TBM or MSL)
3. DRILLING AGENCY	12. MANUFACTURER'S DESIGNATION OF DRILL
4. HOLE NO. (As shown on drawing title and file number) Z-9C	13. TOTAL NO. OF OVER-BURDEN SAMPLES TAKEN — DISTURBED — UNDISTURBED
5. NAME OF DRILLER	14. TOTAL NUMBER CORE BOXES
6. DIRECTION OF HOLE ☐ VERTICAL ☐ INCLINED _____ DEG. FROM VERT.	15. ELEVATION GROUND WATER
7. THICKNESS OF OVERBURDEN	16. DATE HOLE — STARTED — COMPLETED
8. DEPTH DRILLED INTO ROCK	17. ELEVATION TOP OF HOLE
9. TOTAL DEPTH OF HOLE	18. TOTAL CORE RECOVERY FOR BORING %
	19. SIGNATURE OF INSPECTOR

ELEVATION a	DEPTH b	LEGEND c	CLASSIFICATION OF MATERIALS (Description) d	% CORE RECOVERY e	BOX OR SAMPLE NO. f	REMARKS (Drilling time, water loss, depth of weathering, etc., if significant) g
	170		Ls (cont.)			
	171					
	172					
	173			173.0 / Run 20		
	174					
	175			5.0 / 5.0		
	176					
	177		(Base of Beech Creek - 177.0') (Top of Flume Fm) Shale, dGn, mass, Blocky			
	178			178.0		
			Bot depth - 178.0'			
	180					

ENG FORM 1836 MAR 71 PREVIOUS EDITIONS ARE OBSOLETE. PROJECT HOLE NO.

Hole No. WES-2-9C-88

DRILLING LOG	DIVISION	INSTALLATION	SHEET OF SHEETS

1. PROJECT	10. SIZE AND TYPE OF BIT
2. LOCATION (Coordinates or Station)	11. DATUM FOR ELEVATION SHOWN (TBM or MSL)
3. DRILLING AGENCY	12. MANUFACTURER'S DESIGNATION OF DRILL
4. HOLE NO. (As shown on drawing title and file number)	13. TOTAL NO. OF OVER-BURDEN SAMPLES TAKEN — DISTURBED — UNDISTURBED
5. NAME OF DRILLER	14. TOTAL NUMBER CORE BOXES
6. DIRECTION OF HOLE ☐ VERTICAL ☐ INCLINED ____ DEG. FROM VERT.	15. ELEVATION GROUND WATER
7. THICKNESS OF OVERBURDEN	16. DATE HOLE — STARTED — COMPLETED
8. DEPTH DRILLED INTO ROCK	17. ELEVATION TOP OF HOLE
9. TOTAL DEPTH OF HOLE	18. TOTAL CORE RECOVERY FOR BORING %
	19. SIGNATURE OF INSPECTOR

ELEVATION a	DEPTH b	LEGEND c	CLASSIFICATION OF MATERIALS (Description) d	% CORE RECOVERY e	BOX OR SAMPLE NO. f	REMARKS (Drilling time, water loss, depth of weathering, etc., if significant) g
			Well No: WES-2-9C-88 (Beech Creek Ls)			Date well screen was set: 1/23/87
			+2.5			
737.83			0.0' Ground surface			
			Grout mixture			Water level just Prior to setting Screen – 156.6'
			115.0			
			Bentonite Pellets			
			118.0			
			Filter Pack			Teflon Pipe – 152.0 to 178.0'
570.83			167.0			
			Well Screen			
560.83			177.0			
			Trap			
			178.0			
			178.0 Boring Depth			

ENG FORM 1836 PREVIOUS EDITIONS ARE OBSOLETE PROJECT HOLE NO.

Hole No. WES-2-9CP2-

DRILLING LOG

DIVISION	
INSTALLATION	
SHEET OF SHEETS	
1. PROJECT	
2. LOCATION (Coordinates or Station)	
3. DRILLING AGENCY	
4. HOLE NO. (As shown on drawing title and file number)	
5. NAME OF DRILLER	
6. DIRECTION OF HOLE ☐ VERTICAL ☐ INCLINED _____ DEG. FROM VERT.	
7. THICKNESS OF OVERBURDEN	
8. DEPTH DRILLED INTO ROCK	
9. TOTAL DEPTH OF HOLE	
10. SIZE AND TYPE OF BIT	
11. DATUM FOR ELEVATION SHOWN (TBM or MSL)	
12. MANUFACTURER'S DESIGNATION OF DRILL	
13. TOTAL NO. OF OVER-BURDEN SAMPLES TAKEN	DISTURBED / UNDIST.
14. TOTAL NUMBER CORE BOXES	
15. ELEVATION GROUND WATER	
16. DATE HOLE	STARTED / COMPLETED
17. ELEVATION TOP OF HOLE	
18. TOTAL CORE RECOVERY FOR BORING	%
19. SIGNATURE OF INSPECTOR	

ELEVATION a	DEPTH b	LEGEND c	CLASSIFICATION OF MATERIALS (Description) d	% CORE RECOVERY e	BOX OR SAMPLE NO. f	REMARKS (Drilling time, water loss, depth of weathering, etc., if significant) g
			Well No.: WES-2-9CP2-BB (Golconda/Hancy/LS			Date well screen was set: 1/26/87
			+2.5			
			0.0' Ground surface			
			Grout mixture			Water level just Prior to setting Screen –
			82.0			
			Bentonite Pellets			
			85.0			
			Filter Pack			Teflon pipe – 86.5 to 97.5'
			91.5			
			Well Screen			
			96.5			
			Trap			
			97.5			
			97.5 Boring Depth			

ENG FORM 1836 MAR 71 PREVIOUS EDITIONS ARE OBSOLETE. PROJECT HOLE NO.

Hole No. WFS-2-10C

DRILLING LOG	DIVISION: NS Navy	INSTALLATION: NWSC Penna Inc	SHEET 1 OF 16 SHEETS
1. PROJECT: Hydrogeologic Station		10. SIZE AND TYPE OF BIT: HQ Wireline Core	
2. LOCATION (Coordinates or Station): Duo Burn Grounds (DBG)		11. DATUM FOR ELEVATION SHOWN (TBM or MSL)	
3. DRILLING AGENCY: WFS		12. MANUFACTURER'S DESIGNATION OF DRILL: Failing 1500	
4. HOLE NO. (As shown on drawing title and file number): 2-10C		13. TOTAL NO. OF OVER-BURDEN SAMPLES TAKEN	DISTURBED / UNDISTURBED
5. NAME OF DRILLER: Dan Taylor		14. TOTAL NUMBER CORE BOXES	
6. DIRECTION OF HOLE: ☑ VERTICAL ☐ INCLINED ____ DEG. FROM VERT.		15. ELEVATION GROUND WATER	
		16. DATE HOLE	STARTED: 2/5/88 / COMPLETED: 2/13/88
7. THICKNESS OF OVERBURDEN		17. ELEVATION TOP OF HOLE	
8. DEPTH DRILLED INTO ROCK		18. TOTAL CORE RECOVERY FOR BORING %	
9. TOTAL DEPTH OF HOLE: 153.5		19. SIGNATURE OF INSPECTOR: Geologist Richard W. Hunt	

ELEVATION a	DEPTH b	LEGEND c	CLASSIFICATION OF MATERIALS (Description) d	% CORE RECOVERY e	BOX OR SAMPLE NO. f	REMARKS (Drilling time, water loss, depth of weathering, etc., if significant) g
	0		Silty Clay, y Tan + olive firm in top to soft + wet in bot. (Road construction fill)			Drilled w/ 7" flight auger from 0.0 to 17.8'
	1					
	2					
	3					
	4					
	5					
	6					
	7		Silty Clay, yel tan w/ sandy lens, soft + saturated in top 2 ft, y moist to wet below upper 2 ft, (Residual soil)			
	8					
	9					
	10					

ENG FORM 1836 MAR 71 PREVIOUS EDITIONS ARE OBSOLETE. PROJECT HOLE NO.

DRILLING LOG	DIVISION	INSTALLATION	SHEET 2 OF 16 SHEETS

1. PROJECT	10. SIZE AND TYPE OF BIT
2. LOCATION (Coordinates or Station)	11. DATUM FOR ELEVATION SHOWN (TBM or MSL)
3. DRILLING AGENCY	12. MANUFACTURER'S DESIGNATION OF DRILL
4. HOLE NO. (As shown on drawing title and file number) 2-10C	13. TOTAL NO. OF OVER-BURDEN SAMPLES TAKEN — DISTURBED — UNDISTU
5. NAME OF DRILLER	14. TOTAL NUMBER CORE BOXES
6. DIRECTION OF HOLE ☐ VERTICAL ☐ INCLINED ____ DEG. FROM VERT.	15. ELEVATION GROUND WATER
	16. DATE HOLE — STARTED — COMPLETED
7. THICKNESS OF OVERBURDEN	17. ELEVATION TOP OF HOLE
8. DEPTH DRILLED INTO ROCK	18. TOTAL CORE RECOVERY FOR BORING %
9. TOTAL DEPTH OF HOLE	19. SIGNATURE OF INSPECTOR

ELEVATION a	DEPTH b	LEGEND c	CLASSIFICATION OF MATERIALS (Description) d	% CORE RECOVERY e	BOX OR SAMPLE NO. f	REMARKS (Drilling time, water loss, depth of weathering, etc., if significant) g
	10		Silty clay (cont.)			
	11					
	12					
	13					
	14					
	15					
	16					
	17					Grouted in 6" dia. PVC casing to a depth of 17.8'
			Top Rock	17.8		Refusal to auger
	18		Conglomerate, sub-rounded to rounded SS + Sh pebbles set in SS matrix, 1-in Gr occ. carbonaceous inclus, hd, friable.	Run 1		Started Coring with HQ wireline rigging.
	19					
	20		Sandstone, 1Gr w/num Blk shale wavy partings + thin lenses			

ENG FORM 1836. PREVIOUS EDITIONS ARE OBSOLETE. PROJECT HOLE NO.

Hole No. WES-7-10C-94

DRILLING LOG	DIVISION	INSTALLATION	SHEET 3 OF 16 SHEETS

1. PROJECT	10. SIZE AND TYPE OF BIT
2. LOCATION (Coordinates or Station)	11. DATUM FOR ELEVATION SHOWN (TBM or MSL)
3. DRILLING AGENCY	12. MANUFACTURER'S DESIGNATION OF DRILL
4. HOLE NO. (As shown on drawing title and file number) 2-10C	13. TOTAL NO. OF OVER-BURDEN SAMPLES TAKEN — DISTURBED — UNDISTURBED
5. NAME OF DRILLER	14. TOTAL NUMBER CORE BOXES
6. DIRECTION OF HOLE ☐ VERTICAL ☐ INCLINED ____ DEG. FROM VERT.	15. ELEVATION GROUND WATER
7. THICKNESS OF OVERBURDEN	16. DATE HOLE — STARTED — COMPLETED
8. DEPTH DRILLED INTO ROCK	17. ELEVATION TOP OF HOLE
9. TOTAL DEPTH OF HOLE	18. TOTAL CORE RECOVERY FOR BORING %
	19. SIGNATURE OF INSPECTOR

ELEVATION a	DEPTH b	LEGEND c	CLASSIFICATION OF MATERIALS (Description) d	% CORE RECOVERY e	BOX OR SAMPLE NO. f	REMARKS (Drilling time, water loss, depth of weathering, etc., if significant) g
	20		fine grained, hd slightly to non-friable			
	21					
				4.7/4.7		
	22					
	23					
				23.5 Run 2		
	24					
	25					
	26					
				9.2/9.2		
	27					
	28					
	29					
	30					

ENG FORM 1836 PREVIOUS EDITIONS ARE OBSOLETE PROJECT HOLE NO.

DRILLING LOG	DIVISION	INSTALLATION	SHEET 7 OF 16 SHEETS

1. PROJECT	10. SIZE AND TYPE OF BIT
2. LOCATION (Coordinates or Station)	11. DATUM FOR ELEVATION SHOWN (TBM or MSL)
3. DRILLING AGENCY	12. MANUFACTURER'S DESIGNATION OF DRILL
4. HOLE NO. (As shown on drawing title and file number) Z-10c	13. TOTAL NO. OF OVER-BURDEN SAMPLES TAKEN — DISTURBED — UNDISTURBED
5. NAME OF DRILLER	14. TOTAL NUMBER CORE BOXES
6. DIRECTION OF HOLE ☐ VERTICAL ☐ INCLINED _____ DEG. FROM VERT.	15. ELEVATION GROUND WATER
	16. DATE HOLE — STARTED — COMPLETED
7. THICKNESS OF OVERBURDEN	17. ELEVATION TOP OF HOLE
8. DEPTH DRILLED INTO ROCK	18. TOTAL CORE RECOVERY FOR BORING %
9. TOTAL DEPTH OF HOLE	19. SIGNATURE OF INSPECTOR

ELEVATION a	DEPTH b	LEGEND c	CLASSIFICATION OF MATERIALS (Description) d	% CORE RECOVERY e	BOX OR SAMPLE NO. f	REMARKS (Drilling time, water loss, depth of weathering, etc., if significant) g
	30		SS, (Cont)			
	31					
	32					
				32.7		
				Run 3		
	33					
	34					
	35					
	36			6.2/9.9		
	37		Shale, vdGr, th bd, num lGr ss pts			Penn Sediments
				3.7		37.3'
			(Hardinsburg fm) Shale, dGn, mass, blocky-crumbly, hd occ s'sides			Miss Sediments
	38					
	39					Core loss was due to samp' dropping from bl + being ground away.
	40					

ENG FORM 1836 MAR 71 PREVIOUS EDITIONS ARE OBSOLETE. PROJECT HOLE NO.

Hole No. WES-2-10C-88

DRILLING LOG	DIVISION	INSTALLATION	SHEET 5 OF 16 SHEETS

1. PROJECT	10. SIZE AND TYPE OF BIT
2. LOCATION (Coordinates or Station)	11. DATUM FOR ELEVATION SHOWN (TBM or MSL)
3. DRILLING AGENCY	12. MANUFACTURER'S DESIGNATION OF DRILL
4. HOLE NO. (As shown on drawing title and file number) 2-10C	13. TOTAL NO. OF OVER-BURDEN SAMPLES TAKEN — DISTURBED — UNDISTURBED
5. NAME OF DRILLER	14. TOTAL NUMBER CORE BOXES
6. DIRECTION OF HOLE ☐ VERTICAL ☐ INCLINED ____ DEG. FROM VERT.	15. ELEVATION GROUND WATER
7. THICKNESS OF OVERBURDEN	16. DATE HOLE — STARTED — COMPLETED
8. DEPTH DRILLED INTO ROCK	17. ELEVATION TOP OF HOLE
9. TOTAL DEPTH OF HOLE	18. TOTAL CORE RECOVERY FOR BORING %
	19. SIGNATURE OF INSPECTOR

ELEVATION a	DEPTH b	LEGEND c	CLASSIFICATION OF MATERIALS (Description) d	% CORE RECOVERY e	BOX OR SAMPLE NO. f	REMARKS (Drilling time, water loss, depth of weathering, etc., if significant) g
	40		Shale (cont.)			
	41					
	42		(th bd; d Gn Gr in part)			
				42.6 Run 4		
	43					
	44					
				3.0/4.4		
	45		45.0 - ~49.0' d br Red claystone Shale mottled into d Gn shale.	-1.4		
	46					
	47			47.0 Run 5		
	48					
	49		Shale; vdGr-Blk, th bd, platey-fissile, hd			
	50					

ENG FORM 1836 PREVIOUS EDITIONS ARE OBSOLETE PROJECT HOLE NO.

HOLE NO. W155-2-10C-8E

DRILLING LOG	DIVISION	INSTALLATION	SHEET 6 OF 16 SHEETS

1. PROJECT	10. SIZE AND TYPE OF BIT
2. LOCATION (Coordinates or Station)	11. DATUM FOR ELEVATION SHOWN (TBM or MSL)
3. DRILLING AGENCY	12. MANUFACTURER'S DESIGNATION OF DRILL
4. HOLE NO. (As shown on drawing title and file number) 2-10C	13. TOTAL NO. OF OVER-BURDEN SAMPLES TAKEN — DISTURBED — UNDISTURBED
5. NAME OF DRILLER	14. TOTAL NUMBER CORE BOXES
6. DIRECTION OF HOLE ☐ VERTICAL ☐ INCLINED ____ DEG. FROM VERT.	15. ELEVATION GROUND WATER
7. THICKNESS OF OVERBURDEN	16. DATE HOLE — STARTED — COMPLETED
8. DEPTH DRILLED INTO ROCK	17. ELEVATION TOP OF HOLE
9. TOTAL DEPTH OF HOLE	18. TOTAL CORE RECOVERY FOR BORING %
	19. SIGNATURE OF INSPECTOR

ELEVATION a	DEPTH b	LEGEND c	CLASSIFICATION OF MATERIALS (Description) d	% CORE RECOVERY e	BOX OR SAMPLE NO. f	REMARKS (Drilling time, water loss, depth of weathering, etc., if significant) g
	50					
	51			5.8/6.5		
	52			-0.7		
	53			53.5 Run 6		2/10/88
	54					
	55					
	56			9.8/10.0		
	57					
	58		olive + sl. oxidized in bot ft.	-0.2		
			Base of Hardinsburg - 58.2			
		0	Top of Gatewaula/Haney Limestone, mgrBr, m-c crystalline, sl. fossiliferous, v hard, v dense, occ stylolites.			
	59					
	60					

ENG FORM 1836 MAR 71 PREVIOUS EDITIONS ARE OBSOLETE. PROJECT HOLE NO.

Hole No. WFS-2-10C-88

DRILLING LOG	DIVISION	INSTALLATION	SHEET 7 OF 16 SHEETS

1. PROJECT	10. SIZE AND TYPE OF BIT
2. LOCATION (Coordinates or Station)	11. DATUM FOR ELEVATION SHOWN (TBM or MSL)
3. DRILLING AGENCY	12. MANUFACTURER'S DESIGNATION OF DRILL
4. HOLE NO. (As shown on drawing title and file number) 2-10C	13. TOTAL NO. OF OVER-BURDEN SAMPLES TAKEN — DISTURBED — UNDISTURBED
5. NAME OF DRILLER	14. TOTAL NUMBER CORE BOXES
6. DIRECTION OF HOLE ☐ VERTICAL ☐ INCLINED ____ DEG. FROM VERT.	15. ELEVATION GROUND WATER
7. THICKNESS OF OVERBURDEN	16. DATE HOLE — STARTED — COMPLETED
8. DEPTH DRILLED INTO ROCK	17. ELEVATION TOP OF HOLE
9. TOTAL DEPTH OF HOLE	18. TOTAL CORE RECOVERY FOR BORING %
	19. SIGNATURE OF INSPECTOR

ELEVATION a	DEPTH b	LEGEND c	CLASSIFICATION OF MATERIALS (Description) d	% CORE RECOVERY e	BOX OR SAMPLE NO. f	REMARKS (Drilling time, water loss, depth of weathering, etc., if significant) g
	60		Ls (cont.)			
		0				
	61					
	62					
		5				
	63					
				63.5 / Run 7		
	64		Shale, Blk, th bd,			
	65					
			Ls (as above)			
	66	20	shale (as above)			
			Ls (as above			
				8.0 / 10.0		
	67					
				-2.0		
	68			-1.7		
		0				
	69					Ls shows oxidation
	70					

ENG FORM 1836 MAR 71 PREVIOUS EDITIONS ARE OBSOLETE. PROJECT HOLE NO.

DRILLING LOG	DIVISION	INSTALLATION	SHEET 8 OF 16 SHEETS

1. PROJECT	10. SIZE AND TYPE OF BIT
2. LOCATION (Coordinates or Station)	11. DATUM FOR ELEVATION SHOWN (TBM or MSL)
3. DRILLING AGENCY	12. MANUFACTURER'S DESIGNATION OF DRILL
4. HOLE NO. (As shown on drawing title and file number) 2-160	13. TOTAL NO. OF OVER-BURDEN SAMPLES TAKEN — DISTURBED — UNDISTU
5. NAME OF DRILLER	14. TOTAL NUMBER CORE BOXES
6. DIRECTION OF HOLE ☐ VERTICAL ☐ INCLINED ____ DEG. FROM VERT.	15. ELEVATION GROUND WATER
7. THICKNESS OF OVERBURDEN	16. DATE HOLE — STARTED — COMPLETED
8. DEPTH DRILLED INTO ROCK	17. ELEVATION TOP OF HOLE
9. TOTAL DEPTH OF HOLE	18. TOTAL CORE RECOVERY FOR BORING %
	19. SIGNATURE OF INSPECTOR

ELEVATION a	DEPTH b	LEGEND c	CLASSIFICATION OF MATERIALS (Description) d	% CORE RECOVERY e	BOX OR SAMPLE NO. f	REMARKS (Drilling time, water loss, depth of weathering, etc., if significant) g
	70		Ls (cont)			
			Fe stained open jt			
	71		Base of Golconda / Haney			
			Top of Indian sprs. - 71.5 (Big Clifty fm)			
	72		Shale, vdGr-Blk, th bd, platy-flakey, hard, occ fossils, occ s'sides.			Ground core away between 71.5 + 73.1
	73			73.2		Pull depth
				73.5		
				Run 8		
	74					
				3.5 / 3.2		
	75					
				70.3'		
	76					
				76.7		Reamed hole & set 4" PVC casing to 76.7'
				Run 9		
	77					2/12/88
	78					
	79			5.2 / 6.8		
				-1.6		
	80					

ENG FORM 1836 PREVIOUS EDITIONS ARE OBSOLETE. PROJECT HOLE NO.

Hole No. LWFS-2-10C-98

DRILLING LOG	DIVISION	INSTALLATION	SHEET 9 OF 16 SHEETS

1. PROJECT	10. SIZE AND TYPE OF BIT
2. LOCATION (Coordinates or Station)	11. DATUM FOR ELEVATION SHOWN (TBM or MSL)
3. DRILLING AGENCY	12. MANUFACTURER'S DESIGNATION OF DRILL
4. HOLE NO. (As shown on drawing title and file number) 2-10C	13. TOTAL NO. OF OVER-BURDEN SAMPLES TAKEN — DISTURBED — UNDISTURBED
5. NAME OF DRILLER	14. TOTAL NUMBER CORE BOXES
6. DIRECTION OF HOLE ☐ VERTICAL ☐ INCLINED ____ DEG. FROM VERT.	15. ELEVATION GROUND WATER
7. THICKNESS OF OVERBURDEN	16. DATE HOLE — STARTED — COMPLETED
8. DEPTH DRILLED INTO ROCK	17. ELEVATION TOP OF HOLE
9. TOTAL DEPTH OF HOLE	18. TOTAL CORE RECOVERY FOR BORING %
	19. SIGNATURE OF INSPECTOR

ELEVATION a	DEPTH b	LEGEND c	CLASSIFICATION OF MATERIALS (Description) d	% CORE RECOVERY e	BOX OR SAMPLE NO. f	REMARKS (Drilling time, water loss, depth of weathering, etc., if significant) g
	80		Shale (Cont.)			
	81					
	82					
	83			83.5 / Run 10		
	84					
	85					
	86			8.3 / 8.5		
	87					
	88			-0.2		
	89					
	90					

ENG FORM 1836 MAR 71 PREVIOUS EDITIONS ARE OBSOLETE. PROJECT HOLE NO.

HOLE NO. WI-5-2-10C-89

DRILLING LOG	DIVISION	INSTALLATION	SHEET 10 OF 16 SHEETS

1. PROJECT	10. SIZE AND TYPE OF BIT
2. LOCATION (Coordinates or Station)	11. DATUM FOR ELEVATION SHOWN (TBM or MSL)
3. DRILLING AGENCY	12. MANUFACTURER'S DESIGNATION OF DRILL
4. HOLE NO. (As shown on drawing title and file number) 2-10C	13. TOTAL NO. OF OVER-BURDEN SAMPLES TAKEN — DISTURBED — UNDISTURBED
5. NAME OF DRILLER	14. TOTAL NUMBER CORE BOXES
6. DIRECTION OF HOLE ☐ VERTICAL ☐ INCLINED ____ DEG. FROM VERT.	15. ELEVATION GROUND WATER
7. THICKNESS OF OVERBURDEN	16. DATE HOLE — STARTED — COMPLETED
8. DEPTH DRILLED INTO ROCK	17. ELEVATION TOP OF HOLE
9. TOTAL DEPTH OF HOLE	18. TOTAL CORE RECOVERY FOR BORING %
	19. SIGNATURE OF INSPECTOR

ELEVATION a	DEPTH b	LEGEND c	CLASSIFICATION OF MATERIALS (Description) d	% CORE RECOVERY e	BOX OR SAMPLE NO. f	REMARKS (Drilling time, water loss, depth of weathering, etc., if significant) g
	90		Shale (cont.)			
	91					
	92			92.0 Run 11		
	93					
	94		Shale turns to olive gray + sli oxidized in bot 2'.			
			Base of Indian spgs			
	95		Top of Big Cliffy SS - 94.8'			
			Sandstone 1-m olive tan, th bd-mass, olive Gr shale pts in top few feet, v fine grained, shallow ripples, friable.	6.8 / 7.2		
	96			-0.4 -0.2		
	97					
	98					
	99			99.0 99.2 Run 12		Pull depth
	100					

ENG FORM 1836 MAR 71 PREVIOUS EDITIONS ARE OBSOLETE. PROJECT HOLE NO.

Hole No. WES-2-101-E9

DRILLING LOG	DIVISION	INSTALLATION	SHEET 11 OF 16 SHEETS

1. PROJECT	10. SIZE AND TYPE OF BIT
2. LOCATION (Coordinates or Station)	11. DATUM FOR ELEVATION SHOWN (TBM or MSL)
3. DRILLING AGENCY	12. MANUFACTURER'S DESIGNATION OF DRILL
4. HOLE NO. (As shown on drawing title and file number) 2-10C	13. TOTAL NO. OF OVER-BURDEN SAMPLES TAKEN: DISTURBED / UNDISTURBED
5. NAME OF DRILLER	14. TOTAL NUMBER CORE BOXES
6. DIRECTION OF HOLE ☐ VERTICAL ☐ INCLINED ____ DEG. FROM VERT.	15. ELEVATION GROUND WATER
7. THICKNESS OF OVERBURDEN	16. DATE HOLE: STARTED / COMPLETED
8. DEPTH DRILLED INTO ROCK	17. ELEVATION TOP OF HOLE
9. TOTAL DEPTH OF HOLE	18. TOTAL CORE RECOVERY FOR BORING %
	19. SIGNATURE OF INSPECTOR

ELEVATION a	DEPTH b	LEGEND c	CLASSIFICATION OF MATERIALS (Description) d	% CORE RECOVERY e	BOX OR SAMPLE NO. f	REMARKS (Drilling time, water loss, depth of weathering, etc., if significant) g
	100		SS, (Cont)			
	101			4.5/4.3		
	102			10.2		
	103			103.5		
				Run 13		
	104					
	105					
	106					
	107			9.8/10.0		
				10.2		
	108					
	109					
	110					

ENG FORM 1836 MAR 71 PREVIOUS EDITIONS ARE OBSOLETE. PROJECT HOLE NO.

DRILLING LOG

DIVISION	
INSTALLATION	
SHEET	12 OF 16 SHEETS
1. PROJECT	
2. LOCATION (Coordinates or Station)	
3. DRILLING AGENCY	
4. HOLE NO. (As shown on drawing title and file number)	2-10C
5. NAME OF DRILLER	
6. DIRECTION OF HOLE	☐ VERTICAL ☐ INCLINED _____ DEG. FROM VERT.
7. THICKNESS OF OVERBURDEN	
8. DEPTH DRILLED INTO ROCK	
9. TOTAL DEPTH OF HOLE	
10. SIZE AND TYPE OF BIT	
11. DATUM FOR ELEVATION SHOWN (TBM or MSL)	
12. MANUFACTURER'S DESIGNATION OF DRILL	
13. TOTAL NO. OF OVER-BURDEN SAMPLES TAKEN	DISTURBED / UNDISTURBED
14. TOTAL NUMBER CORE BOXES	
15. ELEVATION GROUND WATER	
16. DATE HOLE	STARTED / COMPLETED
17. ELEVATION TOP OF HOLE	
18. TOTAL CORE RECOVERY FOR BORING	%
19. SIGNATURE OF INSPECTOR	

ELEVATION a	DEPTH b	LEGEND c	CLASSIFICATION OF MATERIALS (Description) d	% CORE RECOVERY e	BOX OR SAMPLE NO. f	REMARKS (Drilling time, water loss, depth of weathering, etc., if significant) g
	110		SS (cont.)			
	111					
	112					
	113			113.3 / 113.5 / Run 14		Pull depth
	114					
	115					
	116					
	117			10.2 / 10.0		
	118	0		10.2		
	119					
	120					

ENG FORM 1836 MAR 71 PREVIOUS EDITIONS ARE OBSOLETE.

PROJECT | HOLE NO.

Hole No. WES-2-10C-88

DRILLING LOG	DIVISION	INSTALLATION	SHEET 13 OF 16 SHEETS

1. PROJECT	10. SIZE AND TYPE OF BIT
2. LOCATION (Coordinates or Station)	11. DATUM FOR ELEVATION SHOWN (TBM or MSL)
3. DRILLING AGENCY	12. MANUFACTURER'S DESIGNATION OF DRILL
4. HOLE NO. (As shown on drawing title and file number) 2-10C	13. TOTAL NO. OF OVER-BURDEN SAMPLES TAKEN: DISTURBED / UNDISTURBED
5. NAME OF DRILLER	14. TOTAL NUMBER CORE BOXES
6. DIRECTION OF HOLE ☐ VERTICAL ☐ INCLINED ____ DEG. FROM VERT.	15. ELEVATION GROUND WATER
7. THICKNESS OF OVERBURDEN	16. DATE HOLE: STARTED / COMPLETED
8. DEPTH DRILLED INTO ROCK	17. ELEVATION TOP OF HOLE
9. TOTAL DEPTH OF HOLE	18. TOTAL CORE RECOVERY FOR BORING %
	19. SIGNATURE OF INSPECTOR

ELEVATION a	DEPTH b	LEGEND c	CLASSIFICATION OF MATERIALS (Description) d	% CORE RECOVERY e	BOX OR SAMPLE NO. f	REMARKS (Drilling time, water loss, depth of weathering, etc., if significant) g
	120		SS (cont.)			
	121					
	122					
	123	0		123.5 / Run 15		
	124	10				2/13/88
	125					
	126					
	127	0		10.0 / 10.0		
		0				
	128					
	129	0				
	130					

HOLE NO. WFS-7-10C-88

DRILLING LOG

DIVISION	
INSTALLATION	
SHEET 14 OF 16 SHEETS	
1. PROJECT	
2. LOCATION (Coordinates or Station)	
3. DRILLING AGENCY	
4. HOLE NO. (As shown on drawing title and file number)	2-10C
5. NAME OF DRILLER	
6. DIRECTION OF HOLE ☐ VERTICAL ☐ INCLINED _____ DEG. FROM VERT.	
7. THICKNESS OF OVERBURDEN	
8. DEPTH DRILLED INTO ROCK	
9. TOTAL DEPTH OF HOLE	
10. SIZE AND TYPE OF BIT	
11. DATUM FOR ELEVATION SHOWN (TBM or MSL)	
12. MANUFACTURER'S DESIGNATION OF DRILL	
13. TOTAL NO. OF OVER-BURDEN SAMPLES TAKEN	DISTURBED / UNDISTU
14. TOTAL NUMBER CORE BOXES	
15. ELEVATION GROUND WATER	
16. DATE HOLE	STARTED / COMPLETED
17. ELEVATION TOP OF HOLE	
18. TOTAL CORE RECOVERY FOR BORING %	
19. SIGNATURE OF INSPECTOR	

ELEVATION a	DEPTH b	LEGEND c	CLASSIFICATION OF MATERIALS (Description) d	% CORE RECOVERY e	BOX OR SAMPLE NO. f	REMARKS (Drilling time, water loss, depth of weathering, etc., if significant) g
	130	10				
	131					
	132	0				
		30	Tan clay + lim clay coated st, oxidized			Base of Big Clifty fm — 132.4
			(Top of Beech Creek)			
	133		Limestone, mgrBr, m-c crystalline, v hd, v den, occ stylolites, fossiliferous			
		0		133.5		
				Run 16		
	134	10				
	135	5	Lim + clay coating			
	136	5	stn			
	137			10.0 / 10.0		
	138	5 / 0	Y clay (tan) / stn			
	139					
		5	clay (tan) coating			
	141					

ENG FORM 1836 MAR 71 · PREVIOUS EDITIONS ARE OBSOLETE.

PROJECT | HOLE NO.

Hole No. WES-2-10-00

DRILLING LOG	DIVISION	INSTALLATION	SHEET 15 OF 16 SHEETS

1. PROJECT	10. SIZE AND TYPE OF BIT
2. LOCATION (Coordinates or Station)	11. DATUM FOR ELEVATION SHOWN (TBM or MSL)
3. DRILLING AGENCY	12. MANUFACTURER'S DESIGNATION OF DRILL
4. HOLE NO. (As shown on drawing title and file number) 2-10C	13. TOTAL NO. OF OVER-BURDEN SAMPLES TAKEN — DISTURBED — UNDISTURBED
5. NAME OF DRILLER	14. TOTAL NUMBER CORE BOXES
6. DIRECTION OF HOLE ☐ VERTICAL ☐ INCLINED ____ DEG. FROM VERT.	15. ELEVATION GROUND WATER
7. THICKNESS OF OVERBURDEN	16. DATE HOLE — STARTED — COMPLETED
8. DEPTH DRILLED INTO ROCK	17. ELEVATION TOP OF HOLE
9. TOTAL DEPTH OF HOLE	18. TOTAL CORE RECOVERY FOR BORING %
	19. SIGNATURE OF INSPECTOR

ELEVATION a	DEPTH b	LEGEND c	CLASSIFICATION OF MATERIALS (Description) d	% CORE RECOVERY e	BOX OR SAMPLE NO. f	REMARKS (Drilling time, water loss, depth of weathering, etc., if significant) g
	140		Ls (cont.)			
	141					
		0	clay coating			
	142	0	clay coating			
		0	" "			
	143		Ls changes to dGr below ~142.0' w/occ to num wavely blk shaley pts.	143.5 / Run 17		
	144	5				
	145	0 5	stn			
	146	0		9.4 / 10.0		
	147	10		~~0.6~~		
	148	6				
		0				
	149	10				
	150		Rough [illegible] No stn. Bottom noted w/ [illegible]			

ENG FORM 1836 PREVIOUS EDITIONS ARE OBSOLETE. PROJECT HOLE NO.

DRILLING LOG

DIVISION

INSTALLATION

SHEET 16 OF 16 SHEETS

1. PROJECT
2. LOCATION (Coordinates or Station)
3. DRILLING AGENCY
4. HOLE NO. (As shown on drawing title and file number) Z-10C
5. NAME OF DRILLER
6. DIRECTION OF HOLE ☐ VERTICAL ☐ INCLINED _____ DEG. FROM VERT.
7. THICKNESS OF OVERBURDEN
8. DEPTH DRILLED INTO ROCK
9. TOTAL DEPTH OF HOLE
10. SIZE AND TYPE OF BIT
11. DATUM FOR ELEVATION SHOWN (TBM or MSL)
12. MANUFACTURER'S DESIGNATION OF DRILL
13. TOTAL NO. OF OVER-BURDEN SAMPLES TAKEN | DISTURBED | UNDISTURBED
14. TOTAL NUMBER CORE BOXES
15. ELEVATION GROUND WATER
16. DATE HOLE | STARTED | COMPLETED
17. ELEVATION TOP OF HOLE
18. TOTAL CORE RECOVERY FOR BORING %
19. SIGNATURE OF INSPECTOR

ELEVATION a	DEPTH b	LEGEND c	CLASSIFICATION OF MATERIALS (Description) d	% CORE RECOVERY e	BOX OR SAMPLE NO. f	REMARKS (Drilling time, water loss, depth of weathering, etc., if significant) g
	150		LS (cont.)			
	151					
			(inclus of Elwren sh in bot 0.2')			
	152					
			Base Beech Creek LS 152.5			
			Top Elwren fm			
			shale, dGn, mass	152.9		Full depth core left in boring
	153			153.5		
			Bot Depth - 153.5'			
	154					
	155					
	156					
	157					
	158					
	159					
	160					

ENG FORM 1836 MAR 71 PREVIOUS EDITIONS ARE OBSOLETE.

PROJECT

HOLE NO.

Hole No. WES-2-10C-8

DRILLING LOG	DIVISION	INSTALLATION	SHEET OF SHEETS

1. PROJECT	10. SIZE AND TYPE OF BIT
2. LOCATION (Coordinates or Station)	11. DATUM FOR ELEVATION SHOWN (TBM or MSL)
3. DRILLING AGENCY	12. MANUFACTURER'S DESIGNATION OF DRILL
4. HOLE NO. (As shown on drawing title and file number)	13. TOTAL NO. OF OVER-BURDEN SAMPLES TAKEN — DISTURBED — UNDISTURBED
5. NAME OF DRILLER	14. TOTAL NUMBER CORE BOXES
6. DIRECTION OF HOLE ☐ VERTICAL ☐ INCLINED ____ DEG. FROM VERT.	15. ELEVATION GROUND WATER
7. THICKNESS OF OVERBURDEN	16. DATE HOLE — STARTED — COMPLETED
8. DEPTH DRILLED INTO ROCK	17. ELEVATION TOP OF HOLE
9. TOTAL DEPTH OF HOLE	18. TOTAL CORE RECOVERY FOR BORING %
	19. SIGNATURE OF INSPECTOR

ELEVATION a	DEPTH b	LEGEND c	CLASSIFICATION OF MATERIALS (Description) d	% CORE RECOVERY e	BOX OR SAMPLE NO. f	REMARKS (Drilling time, water loss, depth of weathering, etc., if significant) g
			Well No: WES-2-10C-88			Date well screen was set: 2/13/88
			+2.5' (716.47)			
			0.0' Ground surface (713.97)			
			Grout mixture			Water level just Prior to setting Screen -
			90.0			
			Bentonite Pellets			
			94.0			
			Filter Pack			
571.97			142.0			
			Well Screen			
561.97			152.0			
			Trap			
			153.0			
			153.5 Boring Depth			

ENG FORM 1836 PREVIOUS EDITIONS ARE OBSOLETE. PROJECT HOLE NO.

Hole No. WES-2-10CP2-

DRILLING LOG	DIVISION	INSTALLATION	SHEET OF SHEETS

1. PROJECT
2. LOCATION (Coordinates or Station)
3. DRILLING AGENCY
4. HOLE NO. (As shown on drawing title and file number)
5. NAME OF DRILLER
6. DIRECTION OF HOLE ☐ VERTICAL ☐ INCLINED _____ DEG. FROM VERT.
7. THICKNESS OF OVERBURDEN
8. DEPTH DRILLED INTO ROCK
9. TOTAL DEPTH OF HOLE
10. SIZE AND TYPE OF BIT
11. DATUM FOR ELEVATION SHOWN (TBM or MSL)
12. MANUFACTURER'S DESIGNATION OF DRILL
13. TOTAL NO. OF OVER-BURDEN SAMPLES TAKEN | DISTURBED | UNDISTURBED
14. TOTAL NUMBER CORE BOXES
15. ELEVATION GROUND WATER
16. DATE HOLE | STARTED | COMPLETED
17. ELEVATION TOP OF HOLE
18. TOTAL CORE RECOVERY FOR BORING %
19. SIGNATURE OF INSPECTOR

ELEVATION a	DEPTH b	LEGEND c	CLASSIFICATION OF MATERIALS (Description) d	% CORE RECOVERY e	BOX OR SAMPLE NO. f	REMARKS (Drilling time, water loss, depth of weathering, etc., if significant) g
			Well No: WES-2-10C P2-88			Date well screen was set: 2/16/88
			+2.5 (716.39)			
			0.0' Ground surface 713.89			
			Grout mixture			Water level just Prior to setting screen -
			52.0			
			Bentonite Pellets			
			55.0			
			Filter Pack			
652.39			61.5			
			Well Screen			
642.39			71.5			
			Trap			
			72.5			
			72.5 Boring Depth			

ENG FORM 1836 PREVIOUS EDITIONS ARE OBSOLETE. PROJECT HOLE NO.

HOLE NO. WES-2-11C-88

DRILLING LOG	DIVISION US Navy	INSTALLATION NWSC, Crane Ind	SHEET 1 OF 17 SHEETS

1. PROJECT: Hydrogeologic Studies, ABG
2. LOCATION (Coordinates or Station):
3. DRILLING AGENCY: WES
4. HOLE NO. (As shown on drawing title and file number): 2-11C
5. NAME OF DRILLER: Dan Taylor
6. DIRECTION OF HOLE: ☑ VERTICAL ☐ INCLINED _____ DEG. FROM VERT.
7. THICKNESS OF OVERBURDEN: 9.5
8. DEPTH DRILLED INTO ROCK:
9. TOTAL DEPTH OF HOLE: 16.10'
10. SIZE AND TYPE OF BIT: NQ wireline
11. DATUM FOR ELEVATION SHOWN (TBM or MSL): MSL
12. MANUFACTURER'S DESIGNATION OF DRILL: Failing 1500
13. TOTAL NO. OF OVER-BURDEN SAMPLES TAKEN: DISTURBED: UNDISTUR:
14. TOTAL NUMBER CORE BOXES:
15. ELEVATION GROUND WATER:
16. DATE HOLE: STARTED 2/19/88 COMPLETED 2/29/88
17. ELEVATION TOP OF HOLE:
18. TOTAL CORE RECOVERY FOR BORING %
19. SIGNATURE OF ~~INSPECTOR~~ Geologist: Richard W. Hunt

ELEVATION a	DEPTH b	LEGEND c	CLASSIFICATION OF MATERIALS (Description) d	% CORE RECOVERY e	BOX OR SAMPLE NO. f	REMARKS (Drilling time, water loss, depth of weathering, etc., if significant) g
	0		Silty Clay, ytan, sdy, soft in top to firm w/depth			0.0 to 9.5 - Auger
	1					
	2					
	3					
	4					
	5					
	6					
	7					
	8					
	9		Top Wea 5.5 - 9.5'	9.5		
	10					9.5 - 11.3 - R.R.B.t.

ENG FORM 1836 PREVIOUS EDITIONS ARE OBSOLETE PROJECT HOLE NO.

Hole No. WES-2-11C-89

DRILLING LOG	DIVISION	INSTALLATION	SHEET 2 OF 17 SHEETS

1. PROJECT	10. SIZE AND TYPE OF BIT
2. LOCATION (Coordinates or Station)	11. DATUM FOR ELEVATION SHOWN (TBM or MSL)
3. DRILLING AGENCY	12. MANUFACTURER'S DESIGNATION OF DRILL
4. HOLE NO. (As shown on drawing title and file number) 2-11C	13. TOTAL NO. OF OVER-BURDEN SAMPLES TAKEN — DISTURBED — UNDISTURBED
5. NAME OF DRILLER	14. TOTAL NUMBER CORE BOXES
6. DIRECTION OF HOLE ☒ VERTICAL ☐ INCLINED ____ DEG. FROM VERT.	15. ELEVATION GROUND WATER
7. THICKNESS OF OVERBURDEN	16. DATE HOLE — STARTED — COMPLETED
8. DEPTH DRILLED INTO ROCK	17. ELEVATION TOP OF HOLE
9. TOTAL DEPTH OF HOLE	18. TOTAL CORE RECOVERY FOR BORING %
	19. SIGNATURE OF INSPECTOR

ELEVATION a	DEPTH b	LEGEND c	CLASSIFICATION OF MATERIALS (Description) d	% CORE RECOVERY e	BOX OR SAMPLE NO. f	REMARKS (Drilling time, water loss, depth of weathering, etc., if significant) g
	11		Sandstone, y-rusty tan, th bd, fine, occ thin gr wavy Sh lens + pts (spaced ½" to 8" apart), highly oxidized to ~ 35.5'			
	11			11.3		
				Run 1		2/20/88 Started Coring w/ HQ wireline at 11.3'
	12					
	13					
	14		numerous breaks or Jts(?) along bedding			
	15					
	16			63/10.0		
	17					
	18			~~3.7~~ -3.6		
	19					
	20					

ENG FORM 1836 PROJECT

Hole No. WES-2-11C-88

DRILLING LOG	DIVISION	INSTALLATION	SHEET 3 OF 17 SHEETS

1. PROJECT	10. SIZE AND TYPE OF BIT
2. LOCATION (Coordinates or Station)	11. DATUM FOR ELEVATION SHOWN (TBM or MSL)
3. DRILLING AGENCY	12. MANUFACTURER'S DESIGNATION OF DRILL
4. HOLE NO. (As shown on drawing title and file number) 2-11C	13. TOTAL NO. OF OVER-BURDEN SAMPLES TAKEN — DISTURBED — UNDISTU
5. NAME OF DRILLER	14. TOTAL NUMBER CORE BOXES
6. DIRECTION OF HOLE ☐ VERTICAL ☐ INCLINED _____ DEG. FROM VERT.	15. ELEVATION GROUND WATER
7. THICKNESS OF OVERBURDEN	16. DATE HOLE — STARTED — COMPLETED
8. DEPTH DRILLED INTO ROCK	17. ELEVATION TOP OF HOLE
9. TOTAL DEPTH OF HOLE	18. TOTAL CORE RECOVERY FOR BORING %
	19. SIGNATURE OF INSPECTOR

ELEVATION a	DEPTH b	LEGEND c	CLASSIFICATION OF MATERIALS (Description) d	% CORE RECOVERY e	BOX OR SAMPLE NO. f	REMARKS (Drilling time, water loss, depth of weathering, etc., if significant) g
	20		Sandstone (cont.)			
	21			21.3 / Run 2		21.2 Full depth
	22					
	23					
	24					
	25			10.1 / 10.0		
	26					
	27			+0.1		
	28					
	29					
	30					

ENG FORM 1836 PROJECT

Hole No. WFS-2-11C-98

DRILLING LOG	DIVISION	INSTALLATION	SHEET 4 OF 17 SHEETS

1. PROJECT	10. SIZE AND TYPE OF BIT
2. LOCATION (Coordinates or Station)	11. DATUM FOR ELEVATION SHOWN (TBM or MSL)
3. DRILLING AGENCY	12. MANUFACTURER'S DESIGNATION OF DRILL
4. HOLE NO. (As shown on drawing title and file number) 2-11C	13. TOTAL NO. OF OVER-BURDEN SAMPLES TAKEN — DISTURBED — UNDISTURBED
5. NAME OF DRILLER	14. TOTAL NUMBER CORE BOXES
6. DIRECTION OF HOLE ☐ VERTICAL ☐ INCLINED ____ DEG. FROM VERT.	15. ELEVATION GROUND WATER
7. THICKNESS OF OVERBURDEN	16. DATE HOLE — STARTED — COMPLETED
8. DEPTH DRILLED INTO ROCK	17. ELEVATION TOP OF HOLE
9. TOTAL DEPTH OF HOLE	18. TOTAL CORE RECOVERY FOR BORING %
	19. SIGNATURE OF INSPECTOR

ELEVATION a	DEPTH b	LEGEND c	CLASSIFICATION OF MATERIALS (Description) d	% CORE RECOVERY e	BOX OR SAMPLE NO. f	REMARKS (Drilling time, water loss, depth of weathering, etc., if significant) g
	30		SS (cont.			
	31			31.3 / Run 3		
	32					
	33					
	34					
	35			10.0 / 10.0		
	36		SS changes to m Gr (35.5 to 41.3')			
	37					
			oxidized, y Br.			
	38		Increase in sh lens below 37.7' (spaced 1/3" to 1/4" or thinly laminated)			
	39		becomes more shaley w/depth			
	40					

ENG FORM 1836 PROJECT

Hole No. WFS-2-11C-88

DRILLING LOG

DIVISION	
INSTALLATION	
SHEET	5 OF 17 SHEETS
1. PROJECT	
2. LOCATION (Coordinates or Station)	
3. DRILLING AGENCY	
4. HOLE NO. (As shown on drawing title and file number)	2-11C
5. NAME OF DRILLER	
6. DIRECTION OF HOLE	☐ VERTICAL ☐ INCLINED _____ DEG. FROM VERT.
7. THICKNESS OF OVERBURDEN	
8. DEPTH DRILLED INTO ROCK	
9. TOTAL DEPTH OF HOLE	
10. SIZE AND TYPE OF BIT	
11. DATUM FOR ELEVATION SHOWN (TBM or MSL)	
12. MANUFACTURER'S DESIGNATION OF DRILL	
13. TOTAL NO. OF OVER-BURDEN SAMPLES TAKEN	DISTURBED / UNDISTURBED
14. TOTAL NUMBER CORE BOXES	
15. ELEVATION GROUND WATER	
16. DATE HOLE	STARTED / COMPLETED
17. ELEVATION TOP OF HOLE	
18. TOTAL CORE RECOVERY FOR BORING	%
19. SIGNATURE OF INSPECTOR	

ELEVATION a	DEPTH b	LEGEND c	CLASSIFICATION OF MATERIALS (Description) d	% CORE RECOVERY e	BOX OR SAMPLE NO. f	REMARKS (Drilling time, water loss, depth of weathering, etc., if significant) g
	40		SS (cont.)			
	41		Base Penn sediments	41.3		unconformity - 41.3
			Top Miss. Sediments (Hardinsburg fm)	Run 4		
	42		shale, m-d Gn, mass, crumbly, w/ zones of dr-Br mottled claystone			
	43					
	44			7.0		
	45					
	46					
	47					Reamed Hole + set 6" dia PVC, Casing to 45.0'
	48			48.0'		
				Run 5		2/23/88
	49					
	50					

ENG FORM 1836 PROJECT HOLE NO.

Hole No. 2-11C

DRILLING LOG	DIVISION	INSTALLATION	SHEET 6 OF 17 SHEETS

1. PROJECT	10. SIZE AND TYPE OF BIT
2. LOCATION (Coordinates or Station)	11. DATUM FOR ELEVATION SHOWN (TBM or MSL)
3. DRILLING AGENCY	12. MANUFACTURER'S DESIGNATION OF DRILL
4. HOLE NO. (As shown on drawing title and file number) 2-11C	13. TOTAL NO. OF OVER-BURDEN SAMPLES TAKEN — DISTURBED — UNDISTURBED
5. NAME OF DRILLER	14. TOTAL NUMBER CORE BOXES
6. DIRECTION OF HOLE ☐ VERTICAL ☐ INCLINED _____ DEG. FROM VERT.	15. ELEVATION GROUND WATER
	16. DATE HOLE — STARTED — COMPLETED
7. THICKNESS OF OVERBURDEN	17. ELEVATION TOP OF HOLE
8. DEPTH DRILLED INTO ROCK	18. TOTAL CORE RECOVERY FOR BORING %
9. TOTAL DEPTH OF HOLE	19. SIGNATURE OF INSPECTOR

ELEVATION a	DEPTH b	LEGEND c	CLASSIFICATION OF MATERIALS (Description) d	% CORE RECOVERY e	BOX OR SAMPLE NO. f	REMARKS (Drilling time, water loss, depth of weathering, etc., if significant) g
	50		Shale (Cont.)			
	51			2.8/4.7 -1.9		Core dropped in hole & Ground away on next Run. (Core loss)
	52					
	53			53.0 Run 6		
	54		Sh, changes to dGr, th bd, flakey, hd.			
	55					
	56			7.7/9.3		
	57			+.6 -1.1		(Core loss) - ground away
	58					
	59					
	60					

ENG FORM 1836 PROJECT

Hole No. 2-11C

DRILLING LOG	DIVISION	INSTALLATION	SHEET 7 OF 17 SHEETS

1. PROJECT	10. SIZE AND TYPE OF BIT
2. LOCATION (Coordinates or Station)	11. DATUM FOR ELEVATION SHOWN (TBM or MSL)
3. DRILLING AGENCY	12. MANUFACTURER'S DESIGNATION OF DRILL
4. HOLE NO. (As shown on drawing title and file number) 2-11C	13. TOTAL NO. OF OVER-BURDEN SAMPLES TAKEN: DISTURBED / UNDISTURBED
5. NAME OF DRILLER	14. TOTAL NUMBER CORE BOXES
6. DIRECTION OF HOLE ☐ VERTICAL ☐ INCLINED ____ DEG. FROM VERT.	15. ELEVATION GROUND WATER
7. THICKNESS OF OVERBURDEN	16. DATE HOLE: STARTED / COMPLETED
8. DEPTH DRILLED INTO ROCK	17. ELEVATION TOP OF HOLE
9. TOTAL DEPTH OF HOLE	18. TOTAL CORE RECOVERY FOR BORING %
	19. SIGNATURE OF INSPECTOR

ELEVATION a	DEPTH b	LEGEND c	CLASSIFICATION OF MATERIALS (Description) d	% CORE RECOVERY e	BOX OR SAMPLE NO. f	REMARKS (Drilling time, water loss, depth of weathering, etc., if significant) g
	60		sh (cont)			
	61					
	62		color changes to olive gr in bot 2.0'	62.1 / 62.3		Pull depth
				Run 7		
	63		(Base Hardinsburg fm - 62.9') (Top Golconda / Haney) limestone, mgrBr, m-c crystalline, vhd, v den.			
	64					
	65		ls is th bd, w/alter olive sh lens			
	66			10.4 / 10.2		
			ls (crystalline, as above) fossiliferous			Lost all water return at 67.3'
	67		clay lens	+0.2		
	68					
			Jts show solutioning & staining			
	69					
	70					

ENG FORM 1836 PREVIOUS EDITIONS ... PROJECT HOLE NO.

Hole No. 2-11C

DRILLING LOG	DIVISION	INSTALLATION	SHEET 8 OF 17 SHEETS

1. PROJECT	10. SIZE AND TYPE OF BIT
2. LOCATION (Coordinates or Station)	11. DATUM FOR ELEVATION SHOWN (TBM or MSL)
3. DRILLING AGENCY	12. MANUFACTURER'S DESIGNATION OF DRILL
4. HOLE NO. (As shown on drawing title and file number) 2-11C	13. TOTAL NO. OF OVER-BURDEN SAMPLES TAKEN — DISTURBED — UNDISTURBED
5. NAME OF DRILLER	14. TOTAL NUMBER CORE BOXES
6. DIRECTION OF HOLE ☐ VERTICAL ☐ INCLINED _____ DEG. FROM VERT.	15. ELEVATION GROUND WATER
7. THICKNESS OF OVERBURDEN	16. DATE HOLE — STARTED — COMPLETED
8. DEPTH DRILLED INTO ROCK	17. ELEVATION TOP OF HOLE
9. TOTAL DEPTH OF HOLE	18. TOTAL CORE RECOVERY FOR BORING %
	19. SIGNATURE OF INSPECTOR

ELEVATION a	DEPTH b	LEGEND c	CLASSIFICATION OF MATERIALS (Description) d	% CORE RECOVERY e	BOX OR SAMPLE NO. f	REMARKS (Drilling time, water loss, depth of weathering, etc., if significant) g
	70		Ls. (cont.)			
	71					
	72			72.5 Run 8		– Flange
	73		oxidized along jt.			
	74			2.7 / 2.9		
				-0.2		
	75		solutioning & stn along Jts.			
				75.4 Run 9		short pull due to running out of drill water.
	76		shaley Ls. highly wea + clayey, olive tan			2/24/88
	77		solutioning & clayey tan stn along jts.	4.3 / 4.4		
	78		not oxidized in lower 2' of Ls.	-0.1		
	79					
	80		Base Galonda / Henry Top Big Clifty Fm	79.8 Run 10		Blocked

ENG FORM 1836 PROJECT HOLE NO.

Hole No. 2-11C

DRILLING LOG	DIVISION	INSTALLATION	SHEET 7 OF 17 SHEETS

1. PROJECT	10. SIZE AND TYPE OF BIT
2. LOCATION (Coordinates or Station)	11. DATUM FOR ELEVATION SHOWN (TBM or MSL)
3. DRILLING AGENCY	12. MANUFACTURER'S DESIGNATION OF DRILL
4. HOLE NO. (As shown on drawing title and file number) 2-11C	13. TOTAL NO. OF OVER-BURDEN SAMPLES TAKEN — DISTURBED — UNDISTURBED
5. NAME OF DRILLER	14. TOTAL NUMBER CORE BOXES
6. DIRECTION OF HOLE ☐ VERTICAL ☐ INCLINED ____ DEG. FROM VERT.	15. ELEVATION GROUND WATER
7. THICKNESS OF OVERBURDEN	16. DATE HOLE — STARTED — COMPLETED
8. DEPTH DRILLED INTO ROCK	17. ELEVATION TOP OF HOLE
9. TOTAL DEPTH OF HOLE	18. TOTAL CORE RECOVERY FOR BORING %
	19. SIGNATURE OF INSPECTOR

ELEVATION a	DEPTH b	LEGEND c	CLASSIFICATION OF MATERIALS (Description) d	% CORE RECOVERY e	BOX OR SAMPLE NO. f	REMARKS (Drilling time, water loss, depth of weathering, etc., if significant) g
	80		(Indian Springs Mem) Shale, blk, th bd, flaky, num carbonaceous specks + flakes along bd. mod hd, occ pyrite nodules.			2/25/88 (had to do some repairs on rig)
	81					
	82			2.3 / 5.2		(Core loss) ground away
	83					
	84					Reamed hole + set 4" dia PVC casing (through the upper 6" casing) to a depth of 85.0.
	85			85.0 / Run 11		
	86					2/27/88
	87			7.3 / 7.8		
	88			-0.5		
	89					
	90					

ENG FORM 1836

Hole No. 2-11C

DRILLING LOG	DIVISION	INSTALLATION	SHEET 10 OF 17 SHEETS

1. PROJECT	10. SIZE AND TYPE OF BIT
2. LOCATION (Coordinates or Station)	11. DATUM FOR ELEVATION SHOWN (TBM or MSL)
3. DRILLING AGENCY	12. MANUFACTURER'S DESIGNATION OF DRILL
4. HOLE NO. (As shown on drawing title and file number) 2-11C	13. TOTAL NO. OF OVER-BURDEN SAMPLES TAKEN — DISTURBED — UNDISTURBED
5. NAME OF DRILLER	14. TOTAL NUMBER CORE BOXES
6. DIRECTION OF HOLE ☐ VERTICAL ☐ INCLINED ____ DEG. FROM VERT.	15. ELEVATION GROUND WATER
7. THICKNESS OF OVERBURDEN	16. DATE HOLE — STARTED — COMPLETED
8. DEPTH DRILLED INTO ROCK	17. ELEVATION TOP OF HOLE
9. TOTAL DEPTH OF HOLE	18. TOTAL CORE RECOVERY FOR BORING %
	19. SIGNATURE OF INSPECTOR

ELEVATION a	DEPTH b	LEGEND c	CLASSIFICATION OF MATERIALS (Description) d	% CORE RECOVERY e	BOX OR SAMPLE NO. f	REMARKS (Drilling time, water loss, depth of weathering, etc., if significant) g
	90		Shale, (Cont.)			
	91					
	92					
				92.8 / Run 12		
	93					
	94					
	95					
	96					
				9.5 / 10.0		
	97					
			ss, mGr. Coarse granular v hd, v dev			
				~~0.5~~		
	98		Shale, olive Gr, mass, crumbly, rounded siltstone nodules in bot.	-0.4		
	99					
			Base Indian Spr. Mem.			99.7'
	100		Top Big Clifty SS			

ENG FORM 1836 PREVIOUS EDITIONS ARE OBSOLETE PROJECT HOLE NO.

DRILLING LOG

DIVISION	
INSTALLATION	
SHEET	11 OF 17 SHEETS
1. PROJECT	
2. LOCATION (Coordinates or Station)	
3. DRILLING AGENCY	
4. HOLE NO. (As shown on drawing title and file number)	2-11C
5. NAME OF DRILLER	
6. DIRECTION OF HOLE	☐ VERTICAL ☐ INCLINED _____ DEG. FROM VERT.
7. THICKNESS OF OVERBURDEN	
8. DEPTH DRILLED INTO ROCK	
9. TOTAL DEPTH OF HOLE	
10. SIZE AND TYPE OF BIT	
11. DATUM FOR ELEVATION SHOWN (TBM or MSL)	
12. MANUFACTURER'S DESIGNATION OF DRILL	
13. TOTAL NO. OF OVER-BURDEN SAMPLES TAKEN	DISTURBED / UNDISTUR
14. TOTAL NUMBER CORE BOXES	
15. ELEVATION GROUND WATER	
16. DATE HOLE	STARTED / COMPLETED
17. ELEVATION TOP OF HOLE	
18. TOTAL CORE RECOVERY FOR BORING	%
19. SIGNATURE OF INSPECTOR	

ELEVATION a	DEPTH b	LEGEND c	CLASSIFICATION OF MATERIALS (Description) d	% CORE RECOVERY e	BOX OR SAMPLE NO. f	REMARKS (Drilling time, water loss, depth of weathering, etc., if significant) g
	100		Sandstone, shaley, mGr Gn, th bd w/shaley pts. hd, platy.			
	101					
	102					
			Sandstone, l olive tan, th bd, v fine, rippled, oxidized, friable.	102.7 / 102.8 Run 13		Pull depth
	103					
	104					
	105					
	106			10.0 / 10.0		
	107					
	108					
	109					
	110					

ENG FORM 1836 PREVIOUS EDITIONS ARE OBSOLETE PROJECT HOLE NO.

Hole No. 2-11C

DRILLING LOG	DIVISION	INSTALLATION	SHEET 12 OF 17 SHEETS

1. PROJECT	10. SIZE AND TYPE OF BIT
2. LOCATION (Coordinates or Station)	11. DATUM FOR ELEVATION SHOWN (TBM or MSL)
3. DRILLING AGENCY	12. MANUFACTURER'S DESIGNATION OF DRILL
4. HOLE NO. (As shown on drawing title and file number) 2-11C	13. TOTAL NO. OF OVER-BURDEN SAMPLES TAKEN — DISTURBED — UNDISTURBED
5. NAME OF DRILLER	14. TOTAL NUMBER CORE BOXES
6. DIRECTION OF HOLE ☐ VERTICAL ☐ INCLINED _____ DEG. FROM VERT.	15. ELEVATION GROUND WATER
7. THICKNESS OF OVERBURDEN	16. DATE HOLE — STARTED — COMPLETED
8. DEPTH DRILLED INTO ROCK	17. ELEVATION TOP OF HOLE
9. TOTAL DEPTH OF HOLE	18. TOTAL CORE RECOVERY FOR BORING %
	19. SIGNATURE OF INSPECTOR

ELEVATION a	DEPTH b	LEGEND c	CLASSIFICATION OF MATERIALS (Description) d	% CORE RECOVERY e	BOX OR SAMPLE NO. f	REMARKS (Drilling time, water loss, depth of weathering, etc., if significant) g
	110		SS (cont.)			
						Losing ~ 25% water return
	111					
	112					
				112.7 / 112.8		Full depth
	113			Run 14		
			(Not Sounded)			
	114					
	115					
				10.1 / 10.0		
	116					
				+0.1		
	117					
	118					
	119					
		0				
	120					

ENG FORM 1836 PROJECT

Hole No. 2-11C

DRILLING LOG	DIVISION	INSTALLATION	SHEET 13 OF 17 SHEETS

1. PROJECT	10. SIZE AND TYPE OF BIT
2. LOCATION (Coordinates or Station)	11. DATUM FOR ELEVATION SHOWN (TBM or MSL)
3. DRILLING AGENCY	12. MANUFACTURER'S DESIGNATION OF DRILL
4. HOLE NO. (As shown on drawing title and file number) 2-11C	13. TOTAL NO. OF OVER-BURDEN SAMPLES TAKEN: DISTURBED / UNDISTUR.
5. NAME OF DRILLER	14. TOTAL NUMBER CORE BOXES
6. DIRECTION OF HOLE ☐ VERTICAL ☐ INCLINED ____ DEG. FROM VERT.	15. ELEVATION GROUND WATER
7. THICKNESS OF OVERBURDEN	16. DATE HOLE: STARTED / COMPLETED
8. DEPTH DRILLED INTO ROCK	17. ELEVATION TOP OF HOLE
9. TOTAL DEPTH OF HOLE	18. TOTAL CORE RECOVERY FOR BORING %
	19. SIGNATURE OF INSPECTOR

ELEVATION a	DEPTH b	LEGEND c	CLASSIFICATION OF MATERIALS (Description) d	% CORE RECOVERY e	BOX OR SAMPLE NO. f	REMARKS (Drilling time, water loss, depth of weathering, etc., if significant) g
	120		SS (cont)			
	121					
	122	10				
		5		122.8		
	123	0		Run 15		
			broken			
		0				
	124					
	125					
	126					
		5		9.7 / 10.0		
		5 / 10 / 5				
	127			-0.3		Lost all water return at ~127.0'
				-0.1		
	128					
		20	clin			
	129	60 / 15	broken			
	130					

ENG FORM 1836 PROJECT

Hole No. 2-11C

DRILLING LOG	DIVISION	INSTALLATION	SHEET 14 OF 17 SHEETS

1. PROJECT	10. SIZE AND TYPE OF BIT
2. LOCATION (Coordinates or Station)	11. DATUM FOR ELEVATION SHOWN (TBM or MSL)
3. DRILLING AGENCY	12. MANUFACTURER'S DESIGNATION OF DRILL
4. HOLE NO. (As shown on drawing title and file number) 2-11C	13. TOTAL NO. OF OVER-BURDEN SAMPLES TAKEN — DISTURBED — UNDISTURBED
5. NAME OF DRILLER	14. TOTAL NUMBER CORE BOXES
6. DIRECTION OF HOLE ☐ VERTICAL ☐ INCLINED ____ DEG. FROM VERT.	15. ELEVATION GROUND WATER
7. THICKNESS OF OVERBURDEN	16. DATE HOLE — STARTED — COMPLETED
8. DEPTH DRILLED INTO ROCK	17. ELEVATION TOP OF HOLE
9. TOTAL DEPTH OF HOLE	18. TOTAL CORE RECOVERY FOR BORING %
	19. SIGNATURE OF INSPECTOR

ELEVATION a	DEPTH b	LEGEND c	CLASSIFICATION OF MATERIALS (Description) d	% CORE RECOVERY e	BOX OR SAMPLE NO. f	REMARKS (Drilling time, water loss, depth of weathering, etc., if significant) g
	130		SS (cont.)			
	131	S	stn			
	132					
				132.6 / 132.8		Pull depth
	133			Run 16		
		o				
		S				
	134	o				
		o		3.3 / 3.2		
		o		~~To.1~~		
	135					
		o				
	136	o		136.0		135.9 - Pull depth Ran out of drill water 2/29/88
		S		Run 17		
	137	stn o	(Base Big Cliffy fm - 137.4')			
			(Top Beech Creek fm)			
	138	o	Limestone, m gr Br. mass, m crystaline, fossiliferous, v hd, v den, pc: stylolites..	6.9 / 6.8		
	139			to.1		
	140					

ENG FORM 1836 PROJECT

DRILLING LOG	DIVISION	INSTALLATION	SHEET 15 OF 17 SHEETS

1. PROJECT	10. SIZE AND TYPE OF BIT
2. LOCATION (Coordinates or Station)	11. DATUM FOR ELEVATION SHOWN (TBM or MSL)
3. DRILLING AGENCY	12. MANUFACTURER'S DESIGNATION OF DRILL
4. HOLE NO. (As shown on drawing title and file number) 2-11C	13. TOTAL NO. OF OVER-BURDEN SAMPLES TAKEN — DISTURBED — UNDISTURBED
5. NAME OF DRILLER	14. TOTAL NUMBER CORE BOXES
6. DIRECTION OF HOLE ☐ VERTICAL ☐ INCLINED _____ DEG. FROM VERT.	15. ELEVATION GROUND WATER
7. THICKNESS OF OVERBURDEN	16. DATE HOLE — STARTED — COMPLETED
8. DEPTH DRILLED INTO ROCK	17. ELEVATION TOP OF HOLE
9. TOTAL DEPTH OF HOLE	18. TOTAL CORE RECOVERY FOR BORING %
	19. SIGNATURE OF INSPECTOR

ELEVATION a	DEPTH b	LEGEND c	CLASSIFICATION OF MATERIALS (Description) d	% CORE RECOVERY e	BOX OR SAMPLE NO. f	REMARKS (Drilling time, water loss, depth of weathering, etc., if significant) g
	140		Ls (cont)			
		70				
		5	open, stn w/lim			
	141	90				
		0				
	142					
				142.8		
	143			Run 18		
		0	- Tan clay seam			
	144	0	stn			
		5				
		0	stn			
	145					
	146					
				9.9 / 10.0		
	147					
		5	stn			
				-0.1		
	148	0	stn (base of oxidation 148.0')			
		0				
		3	stn			
	149	0	Ls (as above) but alt Cr finely crystalline, occ shaley pts.			
	150					

ENG FORM 1836 PROJECT

Hole No. Z-11C

DRILLING LOG	DIVISION	INSTALLATION	SHEET 16 OF 17 SHEETS

1. PROJECT
2. LOCATION (Coordinates or Station)
3. DRILLING AGENCY
4. HOLE NO. (As shown on drawing title and file number) Z-11C
5. NAME OF DRILLER
6. DIRECTION OF HOLE ☐ VERTICAL ☐ INCLINED _____ DEG. FROM VERT.
7. THICKNESS OF OVERBURDEN
8. DEPTH DRILLED INTO ROCK
9. TOTAL DEPTH OF HOLE
10. SIZE AND TYPE OF BIT
11. DATUM FOR ELEVATION SHOWN (TBM or MSL)
12. MANUFACTURER'S DESIGNATION OF DRILL
13. TOTAL NO. OF OVER-BURDEN SAMPLES TAKEN | DISTURBED | UNDISTURBED
14. TOTAL NUMBER CORE BOXES
15. ELEVATION GROUND WATER
16. DATE HOLE | STARTED | COMPLETED
17. ELEVATION TOP OF HOLE
18. TOTAL CORE RECOVERY FOR BORING %
19. SIGNATURE OF INSPECTOR

ELEVATION a	DEPTH b	LEGEND c	CLASSIFICATION OF MATERIALS (Description) d	% CORE RECOVERY e	BOX OR SAMPLE NO. f	REMARKS (Drilling time, water loss, depth of weathering, etc., if significant) g
	150		Ls (mon ½)			
		o				
	151					
		o	clay in st			
	152					
		o				
				152.8		
	153	o		Run 19		
	154					
		o	sln			
	155					
	156			7.5 / 8.2		
	157			07		
	158		Base Beech Creek Ls. Top Elwren Sh - 158.0'			
			Shale, dGn, mass hard.			
	159					
	160					

ENG FORM 1836 PREVIOUS EDITIONS ARE OBSOLETE PROJECT HOLE NO.

Hole No. 4FS2-11C-00

DRILLING LOG	DIVISION	INSTALLATION	SHEET 17 OF 17 SHEETS

1. PROJECT	10. SIZE AND TYPE OF BIT
2. LOCATION (Coordinates or Station)	11. DATUM FOR ELEVATION SHOWN (TBM or MSL)
3. DRILLING AGENCY	12. MANUFACTURER'S DESIGNATION OF DRILL
4. HOLE NO. (As shown on drawing title and file number) 2-11C	13. TOTAL NO. OF OVER-BURDEN SAMPLES TAKEN — DISTURBED — UNDISTUR
5. NAME OF DRILLER	14. TOTAL NUMBER CORE BOXES
6. DIRECTION OF HOLE ☐ VERTICAL ☐ INCLINED _____ DEG. FROM VERT.	15. ELEVATION GROUND WATER
7. THICKNESS OF OVERBURDEN	16. DATE HOLE — STARTED — COMPLETED
8. DEPTH DRILLED INTO ROCK	17. ELEVATION TOP OF HOLE
9. TOTAL DEPTH OF HOLE	18. TOTAL CORE RECOVERY FOR BORING %
	19. SIGNATURE OF INSPECTOR

ELEVATION a	DEPTH b	LEGEND c	CLASSIFICATION OF MATERIALS (Description) d	% CORE RECOVERY e	BOX OR SAMPLE NO. f	REMARKS (Drilling time, water loss, depth of weathering, etc., if significant) g
	160			160.3		Full depth
	161		Bot. Depth- 161.0'			
	162					

ENG FORM ____ PROJECT

Hole No. WES-2-11C-88

DRILLING LOG	DIVISION	INSTALLATION	SHEET OF SHEETS

1. PROJECT	10. SIZE AND TYPE OF BIT
2. LOCATION (Coordinates or Station)	11. DATUM FOR ELEVATION SHOWN (TBM or MSL)
3. DRILLING AGENCY	12. MANUFACTURER'S DESIGNATION OF DRILL
4. HOLE NO. (As shown on drawing title and file number)	13. TOTAL NO. OF OVER-BURDEN SAMPLES TAKEN — DISTURBED — UNDISTURBED
5. NAME OF DRILLER	14. TOTAL NUMBER CORE BOXES
6. DIRECTION OF HOLE ☐ VERTICAL ☐ INCLINED ____ DEG. FROM VERT.	15. ELEVATION GROUND WATER
7. THICKNESS OF OVERBURDEN	16. DATE HOLE — STARTED — COMPLETED
8. DEPTH DRILLED INTO ROCK	17. ELEVATION TOP OF HOLE
9. TOTAL DEPTH OF HOLE	18. TOTAL CORE RECOVERY FOR BORING %
	19. SIGNATURE OF INSPECTOR

ELEVATION a	DEPTH b	LEGEND c	CLASSIFICATION OF MATERIALS (Description) d	% CORE RECOVERY e	BOX OR SAMPLE NO. f	REMARKS (Drilling time, water loss, depth of weathering, etc., if significant) g
			Well No: WES-2-11C-88			Date well screen was set: 2/29/88
			+2.5 = (715.31)			
			0.0' Ground surface (712.81)			
			Grout mixture			Water level just Prior to setting screen –
			95.0			
			Bentonite Pellets			
			100.0			
						PVC Screen + Riser
			Filter Pack			
564.81			148.0			
			Well Screen			
554.81			158.0			
			Trap			
			159.0			
			161.1 Boring Depth			

ENG FORM 1836 PREVIOUS EDITIONS ARE OBSOLETE. PROJECT HOLE NO.

DRILLING LOG	DIVISION	INSTALLATION	SHEET OF SHEETS

1. PROJECT	10. SIZE AND TYPE OF BIT
2. LOCATION (Coordinates or Station)	11. DATUM FOR ELEVATION SHOWN (TBM or MSL)
3. DRILLING AGENCY	12. MANUFACTURER'S DESIGNATION OF DRILL
4. HOLE NO. (As shown on drawing title and file number)	13. TOTAL NO. OF OVER-BURDEN SAMPLES TAKEN — DISTURBED — UNDISTURBED
5. NAME OF DRILLER	14. TOTAL NUMBER CORE BOXES
6. DIRECTION OF HOLE ☐ VERTICAL ☐ INCLINED ____ DEG. FROM VERT.	15. ELEVATION GROUND WATER
7. THICKNESS OF OVERBURDEN	16. DATE HOLE — STARTED — COMPLETED
8. DEPTH DRILLED INTO ROCK	17. ELEVATION TOP OF HOLE
9. TOTAL DEPTH OF HOLE	18. TOTAL CORE RECOVERY FOR BORING %
	19. SIGNATURE OF INSPECTOR

ELEVATION a	DEPTH b	LEGEND c	CLASSIFICATION OF MATERIALS (Description) d	% CORE RECOVERY e	BOX OR SAMPLE NO. f	REMARKS (Drilling time, water loss, depth of weathering, etc., if significant) g
			Well No: WES-2-11CP2-02			Date well screen was set: 3/2/88
			+2.5			
			0.0' Ground surface			
			Grout mixture			Water level just Prior to setting screen –
			58.0			
			Bentonite Pellets			
			63.0			
						PVC Screen + Riser
			Filter Pack			
			69.8			
			Well Screen			
			78			
			Trap			
			80.8			
			80.8 Boring Depth			

ENG FORM 1836 PREVIOUS EDITIONS ARE OBSOLETE

PROJECT | HOLE NO.

Hole No. WES-2-11C-8

DRILLING LOG	DIVISION	INSTALLATION	SHEET OF SHEETS

1. PROJECT	10. SIZE AND TYPE OF BIT
2. LOCATION (Coordinates or Station)	11. DATUM FOR ELEVATION SHOWN (TBM or MSL)
3. DRILLING AGENCY	12. MANUFACTURER'S DESIGNATION OF DRILL
4. HOLE NO. (As shown on drawing title and file number)	13. TOTAL NO. OF OVER-BURDEN SAMPLES TAKEN — DISTURBED — UNDISTURBED
5. NAME OF DRILLER	14. TOTAL NUMBER CORE BOXES
6. DIRECTION OF HOLE ☐ VERTICAL ☐ INCLINED ____ DEG. FROM VERT.	15. ELEVATION GROUND WATER
7. THICKNESS OF OVERBURDEN	16. DATE HOLE — STARTED — COMPLETED
8. DEPTH DRILLED INTO ROCK	17. ELEVATION TOP OF HOLE
9. TOTAL DEPTH OF HOLE	18. TOTAL CORE RECOVERY FOR BORING %
	19. SIGNATURE OF INSPECTOR

ELEVATION a	DEPTH b	LEGEND c	CLASSIFICATION OF MATERIALS (Description) d	% CORE RECOVERY e	BOX OR SAMPLE NO. f	REMARKS (Drilling time, water loss, depth of weathering, etc., if significant) g
			Well No: WES-2-11CP3-88			Date well screen was set: 3/5/88
			+2.5			
			0.0' Ground surface			
			Grout mixture			Water level just Prior to setting screen -
			8.0			
			Bentonite Pellets			
			13.0			PVC Screen+Riser
			Filter Pack			
			36.3			
			Well Screen			
			41.3			
			Trap			
			42.3			
			42.3 Boring Depth			

ENG FORM 1836 PREVIOUS EDITIONS ARE OBSOLETE. PROJECT HOLE NO.

DRILLING LOG

DIVISION	US Navy
INSTALLATION	Nwsc, Crane Ind.
SHEET	1 OF 19 SHEETS
1. PROJECT	Hydrogeologic Studies, DBG
2. LOCATION (Coordinates or Station)	
3. DRILLING AGENCY	WES
4. HOLE NO. (As shown on drawing title and file number)	2-12C
5. NAME OF DRILLER	Dan Taylor
6. DIRECTION OF HOLE	☒ VERTICAL ☐ INCLINED ____ DEG. FROM VERT.
7. THICKNESS OF OVERBURDEN	8.5
8. DEPTH DRILLED INTO ROCK	
9. TOTAL DEPTH OF HOLE	183.7
10. SIZE AND TYPE OF BIT	HO wireline
11. DATUM FOR ELEVATION SHOWN (TBM or MSL)	MSL
12. MANUFACTURER'S DESIGNATION OF DRILL	Failing 1500
13. TOTAL NO. OF OVER-BURDEN SAMPLES TAKEN	DISTURBED: ; UNDISTURBED:
14. TOTAL NUMBER CORE BOXES	
15. ELEVATION GROUND WATER	
16. DATE HOLE	STARTED 3/7/88 ; COMPLETED 3/14/88
17. ELEVATION TOP OF HOLE	
18. TOTAL CORE RECOVERY FOR BORING	%
19. SIGNATURE OF INSPECTOR	Geologist Richard W. Hunt

ELEVATION a	DEPTH b	LEGEND c	CLASSIFICATION OF MATERIALS (Description) d	% CORE RECOVERY e	BOX OR SAMPLE NO. f	REMARKS (Drilling time, water loss, depth of weathering, etc., if significant) g
	0		Silty clay (CL), y tan w/Gr mottling, moss, mod firm, moist, trace sdy toward bot.			Took split spoon samples of soil from 0.0 to 9.4' (refusal)
	1					
	2					
	3					
	4					
	5					
	6					
	7					
	8					
	9		Siltstone sdy, lGr, th bd, v firm - hard alter shaley lens			Set 8" dia PVC casing to 9.4'
	10				RR 8.4	

Hole No. WFS-2-12C-88

DRILLING LOG	DIVISION	INSTALLATION	SHEET 2 OF 19 SHEETS

1. PROJECT	10. SIZE AND TYPE OF BIT
2. LOCATION (Coordinates or Station)	11. DATUM FOR ELEVATION SHOWN (TBM or MSL)
3. DRILLING AGENCY	12. MANUFACTURER'S DESIGNATION OF DRILL
4. HOLE NO. (As shown on drawing title and file number) 2-12C	13. TOTAL NO. OF OVER-BURDEN SAMPLES TAKEN — DISTURBED — UNDISTURBED
5. NAME OF DRILLER	14. TOTAL NUMBER CORE BOXES
6. DIRECTION OF HOLE ☐ VERTICAL ☐ INCLINED ____ DEG. FROM VERT.	15. ELEVATION GROUND WATER
7. THICKNESS OF OVERBURDEN	16. DATE HOLE — STARTED — COMPLETED
8. DEPTH DRILLED INTO ROCK	17. ELEVATION TOP OF HOLE
9. TOTAL DEPTH OF HOLE	18. TOTAL CORE RECOVERY FOR BORING %
	19. SIGNATURE OF INSPECTOR

ELEVATION a	DEPTH b	LEGEND c	CLASSIFICATION OF MATERIALS (Description) d	% CORE RECOVERY e	BOX OR SAMPLE NO. f	REMARKS (Drilling time, water loss, depth of weathering, etc., if significant) g
	10		Siltstone (cont.)	10.4		R.R. bit to 10.4'
				Run 1		Started Coring w/HQ wireline
	11					
	12					
	13			5.2/5.4 -0.2'		
	14					
	15			15.8		
	16			Run 2		
	17	11	Sandstone: l tan-buff, th bd, occ l Gr sh lens + pts, occ carbon inclus, oxidized, f grain, Friable			
	18			5.5/5.8'		
	19			-0.3'		Numerous bd lts 1mm sh
	20	20				

ENG FORM 1836 PROJECT

HOLE NO. WES-2-12C-89

DRILLING LOG	DIVISION	INSTALLATION	SHEET 3 OF 19 SHEETS

1. PROJECT	10. SIZE AND TYPE OF BIT
2. LOCATION (Coordinates or Station)	11. DATUM FOR ELEVATION SHOWN (TBM or MSL)
3. DRILLING AGENCY	12. MANUFACTURER'S DESIGNATION OF DRILL
4. HOLE NO. (As shown on drawing title and file number) 2-12C	13. TOTAL NO. OF OVER-BURDEN SAMPLES TAKEN — DISTURBED — UNDISTURBED
5. NAME OF DRILLER	14. TOTAL NUMBER CORE BOXES
6. DIRECTION OF HOLE ☐ VERTICAL ☐ INCLINED _____ DEG. FROM VERT.	15. ELEVATION GROUND WATER
7. THICKNESS OF OVERBURDEN	16. DATE HOLE — STARTED — COMPLETED
8. DEPTH DRILLED INTO ROCK	17. ELEVATION TOP OF HOLE
9. TOTAL DEPTH OF HOLE	18. TOTAL CORE RECOVERY FOR BORING %
	19. SIGNATURE OF INSPECTOR

ELEVATION a	DEPTH b	LEGEND c	CLASSIFICATION OF MATERIALS (Description) d	% CORE RECOVERY e	BOX OR SAMPLE NO. f	REMARKS (Drilling time, water loss, depth of weathering, etc., if significant) g
	20		Sandstone (cont.)			
	21	Q				
				21.6' Run 3		
	22		Its mostly along bedding			3/2/88
	23					
	24					
		90		10.1 / 10.2		
	25					
	26			21		
	27					
		20	silty-shaley v fine SS. 1 Gr.			
	28					
			SS is d r Br, highly oxidized; num carbonaceous inclus.			
	29					
	30					

ENG FORM 1836 PROJECT HOLE NO.

Hole No. WES-2-12C-89

DRILLING LOG	DIVISION	INSTALLATION	SHEET 4 OF 19 SHEETS

1. PROJECT	10. SIZE AND TYPE OF BIT
2. LOCATION (Coordinates or Station)	11. DATUM FOR ELEVATION SHOWN (TBM or MSL)
3. DRILLING AGENCY	12. MANUFACTURER'S DESIGNATION OF DRILL
4. HOLE NO. (As shown on drawing title and file number) 2-12C	13. TOTAL NO. OF OVER-BURDEN SAMPLES TAKEN — DISTURBED — UNDISTURBED
5. NAME OF DRILLER	14. TOTAL NUMBER CORE BOXES
	15. ELEVATION GROUND WATER
6. DIRECTION OF HOLE ☐ VERTICAL ☐ INCLINED _____ DEG. FROM VERT.	16. DATE HOLE — STARTED — COMPLETED
7. THICKNESS OF OVERBURDEN	17. ELEVATION TOP OF HOLE
8. DEPTH DRILLED INTO ROCK	18. TOTAL CORE RECOVERY FOR BORING %
9. TOTAL DEPTH OF HOLE	19. SIGNATURE OF INSPECTOR

ELEVATION a	DEPTH b	LEGEND c	CLASSIFICATION OF MATERIALS (Description) d	% CORE RECOVERY e	BOX OR SAMPLE NO. f	REMARKS (Drilling time, water loss, depth of weathering, etc., if significant) g
	30		SS (cont.)			
	31					
			Sandstone mGr+Br, Conglomeritic, oxidized, Carbonaceous inclus, hd	31.7' / 31.8 Run 4		Pull depth
	32					
	33					
			sandstone/siltstone, vfine, dGr Br, v hd (siderite?)			
	34		Shale, vdGr, thin bd, flakey, bloaty, occ high angle S sides, Carbonaceous	6.2 / 6.1		
	35			5.1		
	36					
	37					Grouted in 6" d.a PVC Casing to 37.9'
	38			37.9' Run 5		3/9/88
	39			4.4 / 3.6		
	40			3.7 / 1.7		

ENG FORM 1836 PROJECT

DRILLING LOG	DIVISION	INSTALLATION	SHEET 5 OF 9 SHEETS

1. PROJECT
2. LOCATION (Coordinates or Station)
3. DRILLING AGENCY
4. HOLE NO. (As shown on drawing title and file number) Z-12C
5. NAME OF DRILLER
6. DIRECTION OF HOLE ☐ VERTICAL ☐ INCLINED _____ DEG. FROM VERT.
7. THICKNESS OF OVERBURDEN
8. DEPTH DRILLED INTO ROCK
9. TOTAL DEPTH OF HOLE
10. SIZE AND TYPE OF BIT
11. DATUM FOR ELEVATION SHOWN (TBM or MSL)
12. MANUFACTURER'S DESIGNATION OF DRILL
13. TOTAL NO. OF OVER-BURDEN SAMPLES TAKEN | DISTURBED | UNDISTURBED
14. TOTAL NUMBER CORE BOXES
15. ELEVATION GROUND WATER
16. DATE HOLE | STARTED | COMPLETED
17. ELEVATION TOP OF HOLE
18. TOTAL CORE RECOVERY FOR BORING %
19. SIGNATURE OF INSPECTOR

ELEVATION a	DEPTH b	LEGEND c	CLASSIFICATION OF MATERIALS (Description) d	% CORE RECOVERY e	BOX OR SAMPLE NO. f	REMARKS (Drilling time, water loss, depth of weathering, etc., if significant) g
	40		Shale (cont.)			
	41					
	42			42.6'		Pull depth
	43			43.5		
				Run 6		
	44					
	45					
	46					
	47			10.4 / 9.5		
				+ ~~0.9~~'		
	48		Sandstone, 1-m Gr, th bd, mass, f grained, occ shale pts, occ carbonaceous pts & inclus.			
	49					
	50					

ENG FORM 1836 PROJECT HOLE NO.

Hole No. WES-2-12C-88

DRILLING LOG	DIVISION	INSTALLATION	SHEET 6 OF 19 SHEETS

1. PROJECT	10. SIZE AND TYPE OF BIT
2. LOCATION (Coordinates or Station)	11. DATUM FOR ELEVATION SHOWN (TBM or MSL)
3. DRILLING AGENCY	12. MANUFACTURER'S DESIGNATION OF DRILL
4. HOLE NO. (As shown on drawing title and file number) 2-12C	13. TOTAL NO. OF OVER-BURDEN SAMPLES TAKEN — DISTURBED — UNDISTURBED
5. NAME OF DRILLER	14. TOTAL NUMBER CORE BOXES
6. DIRECTION OF HOLE ☐ VERTICAL ☐ INCLINED ____ DEG. FROM VERT.	15. ELEVATION GROUND WATER
	16. DATE HOLE — STARTED — COMPLETED
7. THICKNESS OF OVERBURDEN	17. ELEVATION TOP OF HOLE
8. DEPTH DRILLED INTO ROCK	18. TOTAL CORE RECOVERY FOR BORING %
9. TOTAL DEPTH OF HOLE	19. SIGNATURE OF INSPECTOR

ELEVATION a	DEPTH b	LEGEND c	CLASSIFICATION OF MATERIALS (Description) d	% CORE RECOVERY e	BOX OR SAMPLE NO. f	REMARKS (Drilling time, water loss, depth of weathering, etc., if significant) g
	50		SS (Cont.)			
	51					
	52					
			Sh lens increase below 52.0'			
	53			53.0 / R4 #7		
	54					
	55					
	56			10.1 / 10.3		
	57			-0.2		
	58					
	59					
	60					

ENG FORM 1836 PROJECT

HOLE NO. W15-2-12C-88

DRILLING LOG	DIVISION	INSTALLATION	SHEET 7 OF 19 SHEETS

1. PROJECT	10. SIZE AND TYPE OF BIT
2. LOCATION (Coordinates or Station)	11. DATUM FOR ELEVATION SHOWN (TBM or MSL)
3. DRILLING AGENCY	12. MANUFACTURER'S DESIGNATION OF DRILL
4. HOLE NO. (As shown on drawing title and file number) 2-12C	13. TOTAL NO. OF OVER-BURDEN SAMPLES TAKEN — DISTURBED — UNDISTUR
5. NAME OF DRILLER	14. TOTAL NUMBER CORE BOXES
6. DIRECTION OF HOLE ☐ VERTICAL ☐ INCLINED ____ DEG. FROM VERT.	15. ELEVATION GROUND WATER
7. THICKNESS OF OVERBURDEN	16. DATE HOLE — STARTED — COMPLETED
8. DEPTH DRILLED INTO ROCK	17. ELEVATION TOP OF HOLE
9. TOTAL DEPTH OF HOLE	18. TOTAL CORE RECOVERY FOR BORING %
	19. SIGNATURE OF INSPECTOR

ELEVATION a	DEPTH b	LEGEND c	CLASSIFICATION OF MATERIALS (Description) d	% CORE RECOVERY e	BOX OR SAMPLE NO. f	REMARKS (Drilling time, water loss, depth of weathering, etc., if significant) g
	60		SS (cont.)			
	61					
	62					
	63			63.3 Run 6		
	64					
	65					
	66		(mansfield fm)			Penn. 66.7' (unconformity) miss
	67		(Hardinsburg fm) Shale, dGr, mass. crumbly, num s'sides hd.	8.5 / 10.1		
	68			1.6'		
	69					
	70					

ENG FORM 1976 PROJECT HOLE NO.

Hole No. WES-2-12C-E2

DRILLING LOG	DIVISION	INSTALLATION	SHEET 8 OF 19 SHEETS

1. PROJECT	10. SIZE AND TYPE OF BIT
2. LOCATION (Coordinates or Station)	11. DATUM FOR ELEVATION SHOWN (TBM or MSL)
3. DRILLING AGENCY	12. MANUFACTURER'S DESIGNATION OF DRILL
4. HOLE NO. (As shown on drawing title and file number) 2-12C	13. TOTAL NO. OF OVER-BURDEN SAMPLES TAKEN — DISTURBED — UNDISTURBED
5. NAME OF DRILLER	14. TOTAL NUMBER CORE BOXES
6. DIRECTION OF HOLE ☐ VERTICAL ☐ INCLINED ____ DEG. FROM VERT.	15. ELEVATION GROUND WATER
7. THICKNESS OF OVERBURDEN	16. DATE HOLE — STARTED — COMPLETED
8. DEPTH DRILLED INTO ROCK	17. ELEVATION TOP OF HOLE
9. TOTAL DEPTH OF HOLE	18. TOTAL CORE RECOVERY FOR BORING %
	19. SIGNATURE OF INSPECTOR

ELEVATION a	DEPTH b	LEGEND c	CLASSIFICATION OF MATERIALS (Description) d	% CORE RECOVERY e	BOX OR SAMPLE NO. f	REMARKS (Drilling time, water loss, depth of weathering, etc., if significant) g
	70		Sh (cont.)			
	71					
	72					
	73			73.4		
				Run 9		
	74					
	75					
	76					
	77			10.0 / 10.1		
	78			0.1 / 0.0		
	79					
	80					

ENG FORM 1836 PREVIOUS EDITIONS ARE OBSOLETE PROJECT HOLE NO.

DRILLING LOG	DIVISION	INSTALLATION	SHEET 4 OF 19 SHEETS

1. PROJECT	10. SIZE AND TYPE OF BIT
2. LOCATION (Coordinates or Station)	11. DATUM FOR ELEVATION SHOWN (TBM or MSL)
3. DRILLING AGENCY	12. MANUFACTURER'S DESIGNATION OF DRILL
4. HOLE NO. (As shown on drawing title and file number) 2-12C	13. TOTAL NO. OF OVER-BURDEN SAMPLES TAKEN — DISTURBED — UNDISTUR
5. NAME OF DRILLER	14. TOTAL NUMBER CORE BOXES
6. DIRECTION OF HOLE ☐ VERTICAL ☐ INCLINED ____ DEG. FROM VERT.	15. ELEVATION GROUND WATER
7. THICKNESS OF OVERBURDEN	16. DATE HOLE — STARTED — COMPLETED
8. DEPTH DRILLED INTO ROCK	17. ELEVATION TOP OF HOLE
9. TOTAL DEPTH OF HOLE	18. TOTAL CORE RECOVERY FOR BORING %
	19. SIGNATURE OF INSPECTOR

ELEVATION a	DEPTH b	LEGEND c	CLASSIFICATION OF MATERIALS (Description) d	% CORE RECOVERY e	BOX OR SAMPLE NO. f	REMARKS (Drilling time, water loss, depth of weathering, etc., if significant) g
	80		Sh (cont)			
			Changes to dGr,			
			thin bd below ~75.0'			
	81					
	82					
				82.4 / 83.5		pull depth
				Run 10		
	83					
	84					
	85					
				8.9 / 8.7		
	86			~~tot~~		
	87					
	88					
	89					
	90					

ENG FORM 1836 PROJECT

Hole No. WES-2-12C-94

DRILLING LOG	DIVISION	INSTALLATION	SHEET 10 OF 19 SHEETS

1. PROJECT	10. SIZE AND TYPE OF BIT
2. LOCATION (Coordinates or Station)	11. DATUM FOR ELEVATION SHOWN (TBM or MSL)
3. DRILLING AGENCY	12. MANUFACTURER'S DESIGNATION OF DRILL
4. HOLE NO. (As shown on drawing title and file number) 2-12C	13. TOTAL NO. OF OVER-BURDEN SAMPLES TAKEN — DISTURBED — UNDISTURBED
5. NAME OF DRILLER	14. TOTAL NUMBER CORE BOXES
6. DIRECTION OF HOLE ☐ VERTICAL ☐ INCLINED ____ DEG. FROM VERT.	15. ELEVATION GROUND WATER
7. THICKNESS OF OVERBURDEN	16. DATE HOLE — STARTED — COMPLETED
8. DEPTH DRILLED INTO ROCK	17. ELEVATION TOP OF HOLE
9. TOTAL DEPTH OF HOLE	18. TOTAL CORE RECOVERY FOR BORING %
	19. SIGNATURE OF INSPECTOR

ELEVATION a	DEPTH b	LEGEND c	CLASSIFICATION OF MATERIALS (Description) d	% CORE RECOVERY e	BOX OR SAMPLE NO. f	REMARKS (Drilling time, water loss, depth of weathering, etc., if significant) g
	90		Sh (cont.)			
	91					
	92		(Base of Hardinsburg)	92.2		
			(Top of Golconda/Haney)	Run 11		92.3 3/10/23
	93		Limestone, shaley, dGr, th bd w/alter. liney sh lens, hd, fossiliferous			
	94					
	95					
	96			10.1 / 10.2		
	97			-0.1		
	98					
	99		Limestone, lgr Br, m-c crystalline, mass, v hd, v den, fossiliferous			No Sts.
	100					

ENG FORM 1836 PROJECT HOLE NO.

DRILLING LOG	DIVISION	INSTALLATION	SHEET 11 OF 19 SHEETS

1. PROJECT	10. SIZE AND TYPE OF BIT
2. LOCATION (Coordinates or Station)	11. DATUM FOR ELEVATION SHOWN (TBM or MSL)
3. DRILLING AGENCY	12. MANUFACTURER'S DESIGNATION OF DRILL
4. HOLE NO. (As shown on drawing title and file number) 2-12C	13. TOTAL NO. OF OVER-BURDEN SAMPLES TAKEN — DISTURBED — UNDISTUR
5. NAME OF DRILLER	14. TOTAL NUMBER CORE BOXES
6. DIRECTION OF HOLE ☐ VERTICAL ☐ INCLINED ____ DEG. FROM VERT.	15. ELEVATION GROUND WATER
7. THICKNESS OF OVERBURDEN	16. DATE HOLE — STARTED — COMPLETED
8. DEPTH DRILLED INTO ROCK	17. ELEVATION TOP OF HOLE
9. TOTAL DEPTH OF HOLE	18. TOTAL CORE RECOVERY FOR BORING %
	19. SIGNATURE OF INSPECTOR

ELEVATION a	DEPTH b	LEGEND c	CLASSIFICATION OF MATERIALS (Description) d	% CORE RECOVERY e	BOX OR SAMPLE NO. f	REMARKS (Drilling time, water loss, depth of weathering, etc., if significant) g
	100		Ls (cont.)			
		0				very little opening along sts (bedding)
	101					
		0				
	102			102.4 Run 12		
	103	0	(Base of Galiranda/Honey) (Top at Indian Springs)			103.2'
	104		Shale, Blk, th bd, platey, carbonaceous, hd			
	105			6.5 / 6.6		
	106			-0.1		
	107					
	108					
	109			109.0 Run 13		Set 4" PVC Casing (through the upper 6" casing) down to 109.0' 3/14/88
	110					

ENG FORM 1836 PROJECT

Hole No. WEF-2-17C-BE

DRILLING LOG	DIVISION	INSTALLATION	SHEET 12 OF 19 SHEETS

1. PROJECT	10. SIZE AND TYPE OF BIT
	11. DATUM FOR ELEVATION SHOWN (TBM or MSL)
2. LOCATION (Coordinates or Station)	12. MANUFACTURER'S DESIGNATION OF DRILL
3. ORILLING AGENCY	13. TOTAL NO. OF OVER-BURDEN SAMPLES TAKEN — DISTURBED: — UNDISTURBED:
4. HOLE NO. (As shown on drawing title and file number)	14. TOTAL NUMBER CORE BOXES
5. NAME OF DRILLER	15. ELEVATION GROUND WATER
6. DIRECTION OF HOLE ☐ VERTICAL ☐ INCLINED _____ DEG. FROM VERT.	16. DATE HOLE — STARTED: — COMPLETED:
7. THICKNESS OF OVERBURDEN	17. ELEVATION TOP OF HOLE
8. DEPTH DRILLED INTO ROCK	18. TOTAL CORE RECOVERY FOR BORING %
9. TOTAL DEPTH OF HOLE	19. SIGNATURE OF INSPECTOR

ELEVATION a	DEPTH b	LEGEND c	CLASSIFICATION OF MATERIALS (Description) d	% CORE RECOVERY e	BOX OR SAMPLE NO. f	REMARKS (Drilling time, water loss, depth of weathering, etc., if significant) g
	110		Sh, cont.			
	111					
	112			4.1 / 4.6		
				-0.6		
				-0.4		
	113			113.5 / 113.7		3.1' drill
				Run 14		
	114					
	115					
				4.4 / 4.2		
	116			+0.2		
	117					
			alter. thin 1Gr SS lens in bot zone	117.9		
	118			Run 15		
	119					
	120					

ENG FORM 1836 PROJECT

DRILLING LOG

SHEET 13 OF 19 SHEETS

1. PROJECT	10. SIZE AND TYPE OF BIT
2. LOCATION (Coordinates or Station)	11. DATUM FOR ELEVATION SHOWN (TBM or MSL)
3. DRILLING AGENCY	12. MANUFACTURER'S DESIGNATION OF DRILL
4. HOLE NO. (As shown on drawing title and file number)	13. TOTAL NO. OF OVER-BURDEN SAMPLES TAKEN — DISTURBED — UNDISTURBED
5. NAME OF DRILLER	14. TOTAL NUMBER CORE BOXES
6. DIRECTION OF HOLE ☐ VERTICAL ☐ INCLINED _____ DEG. FROM VERT.	15. ELEVATION GROUND WATER
7. THICKNESS OF OVERBURDEN	16. DATE HOLE — STARTED — COMPLETED
8. DEPTH DRILLED INTO ROCK	17. ELEVATION TOP OF HOLE
9. TOTAL DEPTH OF HOLE	18. TOTAL CORE RECOVERY FOR BORING %
	19. SIGNATURE OF INSPECTOR

ELEVATION a	DEPTH b	LEGEND c	CLASSIFICATION OF MATERIALS (Description) d	% CORE RECOVERY e	BOX OR SAMPLE NO. f	REMARKS (Drilling time, water loss, depth of weathering, etc., if significant) g
	120					
	121		Sh is olive Gr in bot 2.0'.	5.8 / 5.8		
	122					
		0	Base of Indian springs (122.7)			
	123	0	Top of Big Clifty ss			
		0	lytan, v fine, th bd, rippled bd, friable, oxidized	123.7 Run 10		
	124					
	125					
	126					
	127			10.0 / 10.0		
		10				
	128					
	129	0				
	130					

ENG FORM 1836 MAR 71 PREVIOUS EDITIONS ARE OBSOLETE. (TRANSLUCENT)

PROJECT

HOLE NO.

Hole No. WES-2-12C-84

DRILLING LOG	DIVISION	INSTALLATION	SHEET 15 OF 19 SHEETS

1. PROJECT
2. LOCATION (Coordinates or Station)
3. DRILLING AGENCY
4. HOLE NO. (As shown on drawing title and file number)
5. NAME OF DRILLER
6. DIRECTION OF HOLE ☐ VERTICAL ☐ INCLINED _____ DEG. FROM VERT.
7. THICKNESS OF OVERBURDEN
8. DEPTH DRILLED INTO ROCK
9. TOTAL DEPTH OF HOLE
10. SIZE AND TYPE OF BIT
11. DATUM FOR ELEVATION SHOWN (TBM or MSL)
12. MANUFACTURER'S DESIGNATION OF DRILL
13. TOTAL NO. OF OVER-BURDEN SAMPLES TAKEN | DISTURBED | UNDISTURBED
14. TOTAL NUMBER CORE BOXES
15. ELEVATION GROUND WATER
16. DATE HOLE | STARTED | COMPLETED
17. ELEVATION TOP OF HOLE
18. TOTAL CORE RECOVERY FOR BORING %
19. SIGNATURE OF INSPECTOR

ELEVATION a	DEPTH b	LEGEND c	CLASSIFICATION OF MATERIALS (Description) d	% CORE RECOVERY e	BOX OR SAMPLE NO. f	REMARKS (Drilling time, water loss, depth of weathering, etc., if significant) g
	140		SS (cont)			
		10				
	141					
		5				
	142	5				
		50				
	143					
				143.7		
				Run 18		
	144					
	145	0				
		5				
	146					
	147	0		10.0		
				13.0		
	148	0				
		0				
		0				
	149					
	150	0				

ENG FORM 1836 PROJECT

HOLE NO. U1FS-2-12C-B3

DRILLING LOG	DIVISION	INSTALLATION	SHEET 16 OF 19 SHEETS

1. PROJECT	10. SIZE AND TYPE OF BIT
2. LOCATION (Coordinates or Station)	11. DATUM FOR ELEVATION SHOWN (TBM or MSL)
3. DRILLING AGENCY	12. MANUFACTURER'S DESIGNATION OF DRILL
4. HOLE NO. (As shown on drawing title and file number)	13. TOTAL NO. OF OVER-BURDEN SAMPLES TAKEN: DISTURBED / UNDISTUR
5. NAME OF DRILLER	14. TOTAL NUMBER CORE BOXES
6. DIRECTION OF HOLE ☐ VERTICAL ☐ INCLINED ____ DEG. FROM VERT.	15. ELEVATION GROUND WATER
7. THICKNESS OF OVERBURDEN	16. DATE HOLE: STARTED / COMPLETED
8. DEPTH DRILLED INTO ROCK	17. ELEVATION TOP OF HOLE
9. TOTAL DEPTH OF HOLE	18. TOTAL CORE RECOVERY FOR BORING %
	19. SIGNATURE OF INSPECTOR

ELEVATION a	DEPTH b	LEGEND c	CLASSIFICATION OF MATERIALS (Description) d	% CORE RECOVERY e	BOX OR SAMPLE NO. f	REMARKS (Drilling time, water loss, depth of weathering, etc., if significant) g
	150		SS (Cont.)			
	151					
	152					
		10				
		10				
	153					
				153.7 / Run 19		
	154	10				
		60				
		0	Sh			
		70				
		0				
	155		heated			
	156					
	157			9.4 / 10.0		
	158		Base of Basaltic SS.			
			Top of Beekmantown 158.2'			158.5
		0	Limestone, f-m Gr, m Crystalline, fossiliferous, v hd, v dun, occ stylolites, oxidized along most jts in upper zone.	>0.6 -0.2		
		0				
	159					
		0				
	160					

ENG FORM 1836-1 PROJECT

Hole No. WFS-2-12C-89

DRILLING LOG	DIVISION	INSTALLATION	SHEET 17 OF 19 SHEETS

1. PROJECT	10. SIZE AND TYPE OF BIT
2. LOCATION (Coordinates or Station)	11. DATUM FOR ELEVATION SHOWN (TBM or MSL)
3. DRILLING AGENCY	12. MANUFACTURER'S DESIGNATION OF DRILL
4. HOLE NO. (As shown on drawing title and file number)	13. TOTAL NO. OF OVER-BURDEN SAMPLES TAKEN — DISTURBED — UNDISTURBED
5. NAME OF DRILLER	14. TOTAL NUMBER CORE BOXES
6. DIRECTION OF HOLE ☐ VERTICAL ☐ INCLINED ____ DEG. FROM VERT.	15. ELEVATION GROUND WATER
7. THICKNESS OF OVERBURDEN	16. DATE HOLE — STARTED — COMPLETED
8. DEPTH DRILLED INTO ROCK	17. ELEVATION TOP OF HOLE
9. TOTAL DEPTH OF HOLE	18. TOTAL CORE RECOVERY FOR BORING %
	19. SIGNATURE OF INSPECTOR

ELEVATION a	DEPTH b	LEGEND c	CLASSIFICATION OF MATERIALS (Description) d	% CORE RECOVERY e	BOX OR SAMPLE NO. f	REMARKS (Drilling time, water loss, depth of weathering, etc., if significant) g
	160		Ls (cont)			
	161					
	162					
	163			162.8		Pull depth
				163.7		
	164			Run 20		
	165					
	166		Slts are stained w/Lim.			
	167			10.2		
				9.5		
	168		Ls changes to dGr. w/less many shaley pts.	40.3		
			Base of weathering	40.4		
	169					
	170					

ENG FORM 1836 PREVIOUS EDITIONS ARE OBSOLETE PROJECT HOLE NO.

HOLE NO. WES-2-120-89

DRILLING LOG	DIVISION	INSTALLATION	SHEET 18 OF 19 SHEETS

1. PROJECT	10. SIZE AND TYPE OF BIT
2. LOCATION (Coordinates or Station)	11. DATUM FOR ELEVATION SHOWN (TBM or MSL)
3. DRILLING AGENCY	12. MANUFACTURER'S DESIGNATION OF DRILL
4. HOLE NO. (As shown on drawing title and file number)	13. TOTAL NO. OF OVER-BURDEN SAMPLES TAKEN — DISTURBED — UNDISTU.
5. NAME OF DRILLER	14. TOTAL NUMBER CORE BOXES
6. DIRECTION OF HOLE ☐ VERTICAL ☐ INCLINED ____ DEG. FROM VERT.	15. ELEVATION GROUND WATER
7. THICKNESS OF OVERBURDEN	16. DATE HOLE — STARTED — COMPLETED
8. DEPTH DRILLED INTO ROCK	17. ELEVATION TOP OF HOLE
9. TOTAL DEPTH OF HOLE	18. TOTAL CORE RECOVERY FOR BORING %
	19. SIGNATURE OF INSPECTOR

ELEVATION a	DEPTH b	LEGEND c	CLASSIFICATION OF MATERIALS (Description) d	% CORE RECOVERY e	BOX OR SAMPLE NO. f	REMARKS (Drilling time, water loss, depth of weathering, etc., if significant) g
	170		LS (cont.)			
	171					
		o				
	172					
		e				
		s	lim stn clay jts			
		o				
	173					
				173.0 Run 21		173.5 Full depth
	174					
	175					
	176					
	177	c	olive clay	10.2 / 10.1		
	178			10.1		
	179					
		o				
	180					

ENG FORM 1836 PROJECT HOLE NO.

Hole No. WFS-2-12C-89

DRILLING LOG	DIVISION	INSTALLATION	SHEET 19 OF 19 SHEETS

1. PROJECT	10. SIZE AND TYPE OF BIT
2. LOCATION (Coordinates or Station)	11. DATUM FOR ELEVATION SHOWN (TBM or MSL)
3. DRILLING AGENCY	12. MANUFACTURER'S DESIGNATION OF DRILL
4. HOLE NO. (As shown on drawing title and file number)	13. TOTAL NO. OF OVER-BURDEN SAMPLES TAKEN — DISTURBED — UNDISTURBED
5. NAME OF DRILLER	14. TOTAL NUMBER CORE BOXES
6. DIRECTION OF HOLE ☐ VERTICAL ☐ INCLINED ____ DEG. FROM VERT.	15. ELEVATION GROUND WATER
7. THICKNESS OF OVERBURDEN	16. DATE HOLE — STARTED — COMPLETED
8. DEPTH DRILLED INTO ROCK	17. ELEVATION TOP OF HOLE
9. TOTAL DEPTH OF HOLE	18. TOTAL CORE RECOVERY FOR BORING %
	19. SIGNATURE OF INSPECTOR

ELEVATION a	DEPTH b	LEGEND c	CLASSIFICATION OF MATERIALS (Description) d	% CORE RECOVERY e	BOX OR SAMPLE NO. f	REMARKS (Drilling time, water loss, depth of weathering, etc., if significant) g
	180		Ls (Cont.)			
	181	90°	Bse of Beech Creek Ls			
			Top of Ellwren Shale - 181.6'			Tight Contact
	182		Shale, Gn, mass, hd.			
	183			183.7		
	184		Bot. Depth - 183.7'			

ENG FORM 1836 PROJECT HOLE NO.

DRILLING LOG	DIVISION	INSTALLATION	SHEET OF SHEETS

1. PROJECT	10. SIZE AND TYPE OF BIT
2. LOCATION (Coordinates or Station)	11. DATUM FOR ELEVATION SHOWN (TBM or MSL)
3. DRILLING AGENCY	12. MANUFACTURER'S DESIGNATION OF DRILL
4. HOLE NO. (As shown on drawing title and file number)	13. TOTAL NO. OF OVER-BURDEN SAMPLES TAKEN — DISTURBED — UNDIST.
5. NAME OF DRILLER	14. TOTAL NUMBER CORE BOXES
6. DIRECTION OF HOLE ☐ VERTICAL ☐ INCLINED _____ DEG. FROM VERT.	15. ELEVATION GROUND WATER
7. THICKNESS OF OVERBURDEN	16. DATE HOLE — STARTED — COMPLETED
8. DEPTH DRILLED INTO ROCK	17. ELEVATION TOP OF HOLE
9. TOTAL DEPTH OF HOLE	18. TOTAL CORE RECOVERY FOR BORING %
	19. SIGNATURE OF INSPECTOR

ELEVATION a	DEPTH b	LEGEND c	CLASSIFICATION OF MATERIALS (Description) d	% CORE RECOVERY e	BOX OR SAMPLE NO. f	REMARKS (Drilling time, water loss, depth of weathering, etc., if significant) g
			Well No: WES-2-12CP2-88			Date well screen was set: 3/18/88
			+2.5			
			0.0 Ground surface			
			Grout mixture			Water level just Prior to setting screen –
			13.0			
			Bentonite Pellets			
			16.0			PVC Riser + Screen
			Filter Pack			
			29.0			
			Well Screen			
			34.0			
			Trap			
			35.0			
			35.0 Boring Depth			

ENG FORM 1836 PREVIOUS EDITIONS ARE OBSOLETE. PROJECT HOLE NO.

Hole No. WES-2-12C-P2

DRILLING LOG	DIVISION	INSTALLATION	SHEET OF SHEETS

1. PROJECT	10. SIZE AND TYPE OF BIT
2. LOCATION (Coordinates or Station)	11. DATUM FOR ELEVATION SHOWN (TBM or MSL)
3. DRILLING AGENCY	12. MANUFACTURER'S DESIGNATION OF DRILL
4. HOLE NO. (As shown on drawing title and file number)	13. TOTAL NO. OF OVER-BURDEN SAMPLES TAKEN — DISTURBED — UNDISTURBED
5. NAME OF DRILLER	14. TOTAL NUMBER CORE BOXES
	15. ELEVATION GROUND WATER
6. DIRECTION OF HOLE ☐ VERTICAL ☐ INCLINED ____ DEG. FROM VERT.	16. DATE HOLE — STARTED — COMPLETED
7. THICKNESS OF OVERBURDEN	17. ELEVATION TOP OF HOLE
8. DEPTH DRILLED INTO ROCK	18. TOTAL CORE RECOVERY FOR BORING %
9. TOTAL DEPTH OF HOLE	19. SIGNATURE OF INSPECTOR

ELEVATION a	DEPTH b	LEGEND c	CLASSIFICATION OF MATERIALS (Description) d	% CORE RECOVERY e	BOX OR SAMPLE NO. f	REMARKS (Drilling time, water loss, depth of weathering, etc., if significant) g
			Well No: WES-2-12C P2-88			Date well screen was set: 3/21/88
			+2.5			
			0.0' Ground surface			
			Grout mixture			Water level just Prior to setting Screen –
			82.0			
			Bentonite Pellets			
			87.0			
						PVC Screen + Riser
			Filter Pack			
						(set 4" PVC Casing to ~ 38.0')
			93.2			
			Well Screen			
			103.2			
			Trap			
			104.2			
			104.2 Boring Depth			

ENG FORM 1836 PREVIOUS EDITIONS ARE OBSOLETE. PROJECT HOLE NO.

DRILLING LOG	DIVISION	INSTALLATION	SHEET OF SHEETS

1. PROJECT
2. LOCATION (Coordinates or Station)
3. DRILLING AGENCY
4. HOLE NO. (As shown on drawing title and file number)
5. NAME OF DRILLER
6. DIRECTION OF HOLE ☐ VERTICAL ☐ INCLINED _____ DEG. FROM VERT.
7. THICKNESS OF OVERBURDEN
8. DEPTH DRILLED INTO ROCK
9. TOTAL DEPTH OF HOLE
10. SIZE AND TYPE OF BIT
11. DATUM FOR ELEVATION SHOWN (TBM or MSL)
12. MANUFACTURER'S DESIGNATION OF DRILL
13. TOTAL NO. OF OVER-BURDEN SAMPLES TAKEN — DISTURBED — UNDIST.
14. TOTAL NUMBER CORE BOXES
15. ELEVATION GROUND WATER
16. DATE HOLE — STARTED — COMPLETED
17. ELEVATION TOP OF HOLE
18. TOTAL CORE RECOVERY FOR BORING %
19. SIGNATURE OF INSPECTOR

ELEVATION a	DEPTH b	LEGEND c	CLASSIFICATION OF MATERIALS (Description) d	% CORE RECOVERY e	BOX OR SAMPLE NO. f	REMARKS (Drilling time, water loss, depth of weathering, etc., if significant) g
			Well No: WES-2-12C-88			Date well screen was set: 3/14/88
			+2.5			
			0.0' Ground surface			
			Grout mixture			Water level just Prior to setting Screen –
			118.0			
			Bentonite Pellets			
			122.7			
			Filter Pack			PVC Screen + Riser
			171.6			
			Well Screen			
			181.6			
			Trap			
			182.6			
			183.7 Boring Depth			

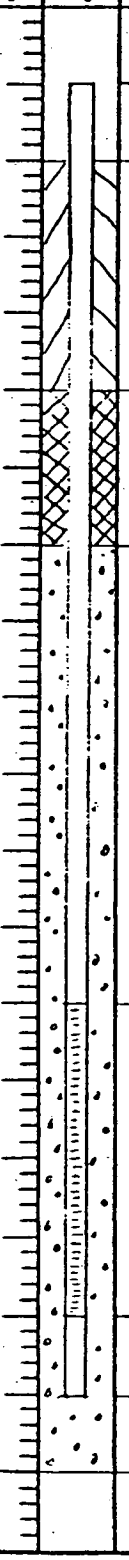

ENG FORM 1836 PREVIOUS EDITIONS ARE OBSOLETE. PROJECT HOLE NO.

Hole No. WES-2-13C-88

DRILLING LOG	DIVISION US Navy	INSTALLATION NWSC Crane Ind	SHEET 1 OF 9 SHEETS

1. PROJECT Hydrogeologic Studies, IDBG	10. SIZE AND TYPE OF BIT HQ Wireline
2. LOCATION (Coordinates or Station)	11. DATUM FOR ELEVATION SHOWN (TBM or MSL) MSL
3. DRILLING AGENCY WES	12. MANUFACTURER'S DESIGNATION OF DRILL Failing 1500
4. HOLE NO. (As shown on drawing title and file number) 2-13C	13. TOTAL NO. OF OVER-BURDEN SAMPLES TAKEN — DISTURBED — UNDISTURBED
5. NAME OF DRILLER Dan Taylor	14. TOTAL NUMBER CORE BOXES
6. DIRECTION OF HOLE ☒ VERTICAL ☐ INCLINED ____ DEG. FROM VERT.	15. ELEVATION GROUND WATER
7. THICKNESS OF OVERBURDEN 12.0	16. DATE HOLE — STARTED 3/23/88 — COMPLETED 3/28/88
8. DEPTH DRILLED INTO ROCK	17. ELEVATION TOP OF HOLE
9. TOTAL DEPTH OF HOLE 83.3'	18. TOTAL CORE RECOVERY FOR BORING %
	19. SIGNATURE OF INSPECTOR Geologist Richard W. Hunt

ELEVATION a	DEPTH b	LEGEND c	CLASSIFICATION OF MATERIALS (Description) d	% CORE RECOVERY e	BOX OR SAMPLE NO. f	REMARKS (Drilling time, water loss, depth of weathering, etc., if significant) g
	0		Silty clay, y tan, with numerous highly oxidized sandstone frags + blocks (Residual soil zone)			Augered from 0.0 to 3.7'. Ran a 2' long NX core bl from 3.7 to 13.2' but only rec. a total of 1.5' of core (wea. SS).
	1					
	2					
	3					
	4					
	5					
	6					
	7					
	8					
	9					
	10					

ENG FORM 1836 — PROJECT — HOLE NO.

FIGURE NO. WES-Z-13C-39

DRILLING LOG

DIVISION	
INSTALLATION	
SHEET	2 OF 9 SHEETS
1. PROJECT	
2. LOCATION (Coordinates or Station)	
3. DRILLING AGENCY	
4. HOLE NO. (As shown on drawing title and file number)	Z-13C
5. NAME OF DRILLER	
6. DIRECTION OF HOLE	☐ VERTICAL ☐ INCLINED _____ DEG. FROM VERT.
7. THICKNESS OF OVERBURDEN	
8. DEPTH DRILLED INTO ROCK	
9. TOTAL DEPTH OF HOLE	
10. SIZE AND TYPE OF BIT	
11. DATUM FOR ELEVATION SHOWN (TBM or MSL)	
12. MANUFACTURER'S DESIGNATION OF DRILL	
13. TOTAL NO. OF OVER-BURDEN SAMPLES TAKEN	DISTURBED: / UNDISTURBED:
14. TOTAL NUMBER CORE BOXES	
15. ELEVATION GROUND WATER	
16. DATE HOLE	STARTED: / COMPLETED:
17. ELEVATION TOP OF HOLE	
18. TOTAL CORE RECOVERY FOR BORING	%
19. SIGNATURE OF INSPECTOR	

ELEVATION a	DEPTH b	LEGEND c	CLASSIFICATION OF MATERIALS (Description) d	% CORE RECOVERY e	BOX OR SAMPLE NO. f	REMARKS (Drilling time, water loss, depth of weathering, etc., if significant) g
	10		Silty Clay & SS (Cont.)			
	11					
			Top Sound Rock 12.0'			
	12		Sandstone, yBr to m grBr, f-c grained, th bd, carbonaceous inclus			
	13			13.2		
				Run 1		Started Coring w/ HQ Wireline
			Sh pts			
	14					
			swirled bedding			
	15					
	16		Conglomeritic			
				9.7 / 10.1		
	17					
			abundant carbonaceous inclus			
	18			-0.4'		
	19		Conglomeritic			
			v fine ss/slst, hd (sdente)?			
	20		(20.0)			

ENG FORM 1092 PROJECT HOLE NO.

Hole No. WES-2-13-68

DRILLING LOG	DIVISION	INSTALLATION	SHEET 3 OF 9 SHEETS

1. PROJECT	10. SIZE AND TYPE OF BIT
2. LOCATION (Coordinates or Station)	11. DATUM FOR ELEVATION SHOWN (TBM or MSL)
3. DRILLING AGENCY	12. MANUFACTURER'S DESIGNATION OF DRILL
4. HOLE NO. (As shown on drawing title and file number) 2-13C	13. TOTAL NO. OF OVER-BURDEN SAMPLES TAKEN — DISTURBED — UNDISTURBED
5. NAME OF DRILLER	14. TOTAL NUMBER CORE BOXES
	15. ELEVATION GROUND WATER
6. DIRECTION OF HOLE ☐ VERTICAL ☐ INCLINED _____ DEG. FROM VERT.	16. DATE HOLE — STARTED — COMPLETED
7. THICKNESS OF OVERBURDEN	17. ELEVATION TOP OF HOLE
8. DEPTH DRILLED INTO ROCK	18. TOTAL CORE RECOVERY FOR BORING %
9. TOTAL DEPTH OF HOLE	19. SIGNATURE OF INSPECTOR

ELEVATION a	DEPTH b	LEGEND c	CLASSIFICATION OF MATERIALS (Description) d	% CORE RECOVERY e	BOX OR SAMPLE NO. f	REMARKS (Drilling time, water loss, depth of weathering, etc., if significant) g
	20		Shale Blk, th bd, hd carbonaceous			
	21					
	22					
	23		Coal, Blk, blocky	23.3 Run 2		
	24		Sandstone/siltstone, v fine, m Gr mass, (no apparent bedding)			
	25					
	26					
	27			10.0 / 10.0		
	28					
	29		- Shaley			
	30					

ENG FORM 1836 PROJECT

HOLE NO. W1-3-2-13C-B9

DRILLING LOG

DIVISION	
INSTALLATION	
SHEET	4 OF 9 SHEETS
1. PROJECT	
2. LOCATION (Coordinates or Station)	
3. DRILLING AGENCY	
4. HOLE NO. (As shown on drawing title and file number)	2-13C
5. NAME OF DRILLER	
6. DIRECTION OF HOLE	☐ VERTICAL ☐ INCLINED _____ DEG. FROM VERT.
7. THICKNESS OF OVERBURDEN	
8. DEPTH DRILLED INTO ROCK	
9. TOTAL DEPTH OF HOLE	
10. SIZE AND TYPE OF BIT	
11. DATUM FOR ELEVATION SHOWN (TBM or MSL)	
12. MANUFACTURER'S DESIGNATION OF DRILL	
13. TOTAL NO. OF OVER-BURDEN SAMPLES TAKEN	DISTURBED / UNDISTU.
14. TOTAL NUMBER CORE BOXES	
15. ELEVATION GROUND WATER	
16. DATE HOLE	STARTED / COMPLETED
17. ELEVATION TOP OF HOLE	
18. TOTAL CORE RECOVERY FOR BORING	%
19. SIGNATURE OF INSPECTOR	

ELEVATION a	DEPTH b	LEGEND c	CLASSIFICATION OF MATERIALS (Description) d	% CORE RECOVERY e	BOX OR SAMPLE NO. f	REMARKS (Drilling time, water loss, depth of weathering, etc., if significant) g
	30		Sandstone, l-m Gr, th bd, with thin Blk sh wavy lams + pts spaced 1/8" to 6" apart. hd, occ Gn sh streaks,			
	31					
			Ht'ing is along bd.			
	32					
	33			33.3		
				Run 3		
	34					
			oxidized - rusty Br			
	35					
	36					
	37			9.9/10.0		
				0.1		
	38					
	39					
	40					

ENG FORM 1836 PROJECT

Hole No. WES-2-13C-56

DRILLING LOG	DIVISION	INSTALLATION	SHEET 5 OF 9 SHEETS

1. PROJECT	10. SIZE AND TYPE OF BIT
2. LOCATION (Coordinates or Station)	11. DATUM FOR ELEVATION SHOWN (TBM or MSL)
3. DRILLING AGENCY	12. MANUFACTURER'S DESIGNATION OF DRILL
4. HOLE NO. (As shown on drawing title and file number) 2-13C	13. TOTAL NO. OF OVER-BURDEN SAMPLES TAKEN — DISTURBED — UNDISTURBED
5. NAME OF DRILLER	14. TOTAL NUMBER CORE BOXES
6. DIRECTION OF HOLE ☐ VERTICAL ☐ INCLINED ____ DEG. FROM VERT.	15. ELEVATION GROUND WATER
7. THICKNESS OF OVERBURDEN	16. DATE HOLE — STARTED — COMPLETED
8. DEPTH DRILLED INTO ROCK	17. ELEVATION TOP OF HOLE
9. TOTAL DEPTH OF HOLE	18. TOTAL CORE RECOVERY FOR BORING %
	19. SIGNATURE OF INSPECTOR

ELEVATION a	DEPTH b	LEGEND c	CLASSIFICATION OF MATERIALS (Description) d	% CORE RECOVERY e	BOX OR SAMPLE NO. f	REMARKS (Drilling time, water loss, depth of weathering, etc., if significant) g
	40		SS (cont.)			
	41					
	42					
	43		Sh lens increase in bot 1½'	43.3 / Run 4		
			Base of Penn sediments			
	44		Top of miss " (Hardinsburg fm)			
	45		Shale Gn, mass, crumbly, w/zones of d rBr claystone mottled inclus, hd.			
	46			3.5 / 6.7		
	47			3.2		Core ground away during drilling
	48					
	49					Set 4" PVC Casing to 50.0'
	50			50.0		

ENG FORM 1836 PROJECT

Hole No. WES-2-13C-P3

DRILLING LOG	DIVISION	INSTALLATION	SHEET 6 OF 9 SHEETS

1. PROJECT	10. SIZE AND TYPE OF BIT
2. LOCATION (Coordinates or Station)	11. DATUM FOR ELEVATION SHOWN (TBM or MSL)
3. DRILLING AGENCY	12. MANUFACTURER'S DESIGNATION OF DRILL
4. HOLE NO. (As shown on drawing title and file number) 2-13C	13. TOTAL NO. OF OVER-BURDEN SAMPLES TAKEN — DISTURBED — UNDISTUR.
5. NAME OF DRILLER	14. TOTAL NUMBER CORE BOXES
6. DIRECTION OF HOLE ☐ VERTICAL ☐ INCLINED ____ DEG. FROM VERT.	15. ELEVATION GROUND WATER
7. THICKNESS OF OVERBURDEN	16. DATE HOLE — STARTED — COMPLETED
8. DEPTH DRILLED INTO ROCK	17. ELEVATION TOP OF HOLE
9. TOTAL DEPTH OF HOLE	18. TOTAL CORE RECOVERY FOR BORING %
	19. SIGNATURE OF INSPECTOR

ELEVATION a	DEPTH b	LEGEND c	CLASSIFICATION OF MATERIALS (Description) d	% CORE RECOVERY e	BOX OR SAMPLE NO. f	REMARKS (Drilling time, water loss, depth of weathering, etc., if significant) g
	50		Sh (cont)	Run 5		3/28/89
	51					
				2.7 / 3.3		
	52					
				0.6		
	53					
				53.3 / Run 6		
	54					
	55					
	56			5.6 / 9.7		
				4.1		ground core away during drilling
	57					
	58					
	59					
	60					

ENG FORM 1836 PREVIOUS

Hole No. WFI-2-13C-89

DRILLING LOG	DIVISION	INSTALLATION	SHEET 7 OF 9 SHEETS

1. PROJECT	10. SIZE AND TYPE OF BIT
2. LOCATION (Coordinates or Station)	11. DATUM FOR ELEVATION SHOWN (TBM or MSL)
3. DRILLING AGENCY	12. MANUFACTURER'S DESIGNATION OF DRILL
4. HOLE NO. (As shown on drawing title and file number) 2-13C	13. TOTAL NO. OF OVER-BURDEN SAMPLES TAKEN — DISTURBED — UNDISTURBED
5. NAME OF DRILLER	14. TOTAL NUMBER CORE BOXES
	15. ELEVATION GROUND WATER
6. DIRECTION OF HOLE ☐ VERTICAL ☐ INCLINED ____ DEG. FROM VERT.	16. DATE HOLE — STARTED — COMPLETED
7. THICKNESS OF OVERBURDEN	17. ELEVATION TOP OF HOLE
8. DEPTH DRILLED INTO ROCK	18. TOTAL CORE RECOVERY FOR BORING %
9. TOTAL DEPTH OF HOLE	19. SIGNATURE OF INSPECTOR

ELEVATION a	DEPTH b	LEGEND c	CLASSIFICATION OF MATERIALS (Description) d	% CORE RECOVERY e	BOX OR SAMPLE NO. f	REMARKS (Drilling time, water loss, depth of weathering, etc., if significant) g
	60					
	61					
	62					
	63			63.0 Run 7		
	64					
	65					
	66			10.3 / 10.3		
	67					
	68					
	69					
			Base of Hardinsburg - 69.5			
			Top of Golconda / Haney			
	70		Shale, Limestone - limey shale			

Hole No. W135-2-13C-26

DRILLING LOG

DIVISION	
INSTALLATION	
SHEET 9 OF 9 SHEETS	
1. PROJECT	
2. LOCATION (Coordinates or Station)	
3. DRILLING AGENCY	
4. HOLE NO. (As shown on drawing title and file number)	Z-13C
5. NAME OF DRILLER	
6. DIRECTION OF HOLE ☐ VERTICAL ☐ INCLINED _____ DEG. FROM VERT.	
7. THICKNESS OF OVERBURDEN	
8. DEPTH DRILLED INTO ROCK	
9. TOTAL DEPTH OF HOLE	
10. SIZE AND TYPE OF BIT	
11. DATUM FOR ELEVATION SHOWN (TBM or MSL)	
12. MANUFACTURER'S DESIGNATION OF DRILL	
13. TOTAL NO. OF OVER-BURDEN SAMPLES TAKEN	DISTURBED / UNDISTUR
14. TOTAL NUMBER CORE BOXES	
15. ELEVATION GROUND WATER	
16. DATE HOLE	STARTED / COMPLETED
17. ELEVATION TOP OF HOLE	
18. TOTAL CORE RECOVERY FOR BORING %	
19. SIGNATURE OF INSPECTOR	

ELEVATION a	DEPTH b	LEGEND c	CLASSIFICATION OF MATERIALS (Description) d	% CORE RECOVERY e	BOX OR SAMPLE NO. f	REMARKS (Drilling time, water loss, depth of weathering, etc., if significant) g
	70		dGr, th bd, fossiliferous			
	71					
	72	0	Crystaline Limestone, 1-m gr Br, m-c, v hd, v den			
	73	0		73.3 / Run 8		
	74	10				
		0				
	75					
	76		shale	10.0 / 10.0		
	77					
	78					
	79	0	(Base of Colombi Lime) (Top of Indian Springs) Shale, Blk, th bd, platy, carbonaceous, hd.			71.3
	80					

ENG FORM 1836 PREVIOUS EDITIONS ARE OBSOLETE

PROJECT | HOLE NO.

Hole No. WES-2-13C-2E

DRILLING LOG	DIVISION	INSTALLATION	SHEET 9 OF 9 SHEETS

1. PROJECT
2. LOCATION (Coordinates or Station)
3. DRILLING AGENCY
4. HOLE NO. (As shown on drawing title and file number) 2-13C
5. NAME OF DRILLER
6. DIRECTION OF HOLE ☐ VERTICAL ☐ INCLINED _____ DEG. FROM VERT.
7. THICKNESS OF OVERBURDEN
8. DEPTH DRILLED INTO ROCK
9. TOTAL DEPTH OF HOLE
10. SIZE AND TYPE OF BIT
11. DATUM FOR ELEVATION SHOWN (TBM or MSL)
12. MANUFACTURER'S DESIGNATION OF DRILL
13. TOTAL NO. OF OVER-BURDEN SAMPLES TAKEN | DISTURBED | UNDISTURBED
14. TOTAL NUMBER CORE BOXES
15. ELEVATION GROUND WATER
16. DATE HOLE | STARTED | COMPLETED
17. ELEVATION TOP OF HOLE
18. TOTAL CORE RECOVERY FOR BORING %
19. SIGNATURE OF INSPECTOR

ELEVATION a	DEPTH b	LEGEND c	CLASSIFICATION OF MATERIALS (Description) d	% CORE RECOVERY e	BOX OR SAMPLE NO. f	REMARKS (Drilling time, water loss, depth of weathering, etc., if significant) g
	80		Shale (cont.			
	81					
	82					
	83			83.3		
			Bot. Depth - 83.3'			
	84					

ENG FORM 1836 PREVIOUS EDITIONS ARE OBSOLETE PROJECT HOLE NO.

DRILLING LOG	DIVISION	INSTALLATION	SHEET OF SHEETS

1. PROJECT
2. LOCATION (Coordinates or Station)
3. DRILLING AGENCY
4. HOLE NO. (As shown on drawing title and file number)
5. NAME OF DRILLER
6. DIRECTION OF HOLE ☐ VERTICAL ☐ INCLINED _____ DEG. FROM VERT.
7. THICKNESS OF OVERBURDEN
8. DEPTH DRILLED INTO ROCK
9. TOTAL DEPTH OF HOLE
10. SIZE AND TYPE OF BIT
11. DATUM FOR ELEVATION SHOWN (TBM or MSL)
12. MANUFACTURER'S DESIGNATION OF DRILL
13. TOTAL NO. OF OVER-BURDEN SAMPLES TAKEN | DISTURBED | UNDISTU
14. TOTAL NUMBER CORE BOXES
15. ELEVATION GROUND WATER
16. DATE HOLE | STARTED | COMPLETED
17. ELEVATION TOP OF HOLE
18. TOTAL CORE RECOVERY FOR BORING %
19. SIGNATURE OF INSPECTOR

ELEVATION a	DEPTH b	LEGEND c	CLASSIFICATION OF MATERIALS (Description) d	% CORE RECOVERY e	BOX OR SAMPLE NO. f	REMARKS (Drilling time, water loss, depth of weathering, etc., if significant) g
			Well No: WES-2-13CP3			Date well screen was set: 3/30/88
			+2.5			
			0.0' Ground surface			
			Grout mixture			Water level just Prior to setting screen –
			7.0			
			Bentonite Pellets			
			8.0			PVC Screen + Riser
			Filter Pack			
			15.0			
			Well Screen			
			20.0 (No. Trap)			
			20.0			
			20.0 Boring Depth			

ENG FORM 1836 MAR 71 PREVIOUS EDITIONS ARE OBSOLETE. PROJECT HOLE NO.

HOLE NO. WES-Z-13CP2-8E

DRILLING LOG	DIVISION	INSTALLATION	SHEET OF SHEETS

1. PROJECT	10. SIZE AND TYPE OF BIT
2. LOCATION (Coordinates or Station)	11. DATUM FOR ELEVATION SHOWN (TBM or MSL)
3. DRILLING AGENCY	12. MANUFACTURER'S DESIGNATION OF DRILL
4. HOLE NO. (As shown on drawing title and file number)	13. TOTAL NO. OF OVER-BURDEN SAMPLES TAKEN — DISTURBED — UNDISTURBED
5. NAME OF DRILLER	14. TOTAL NUMBER CORE BOXES
6. DIRECTION OF HOLE ☐ VERTICAL ☐ INCLINED ____ DEG. FROM VERT.	15. ELEVATION GROUND WATER
7. THICKNESS OF OVERBURDEN	16. DATE HOLE — STARTED — COMPLETED
8. DEPTH DRILLED INTO ROCK	17. ELEVATION TOP OF HOLE
9. TOTAL DEPTH OF HOLE	18. TOTAL CORE RECOVERY FOR BORING %
	19. SIGNATURE OF INSPECTOR

ELEVATION a	DEPTH b	LEGEND c	CLASSIFICATION OF MATERIALS (Description) d	% CORE RECOVERY e	BOX OR SAMPLE NO. f	REMARKS (Drilling time, water loss, depth of weathering, etc., if significant) g
			Well No.: WES-Z-13CP2-8E			Date well screen was set: 3/29/88
			+2.5			
			0.0 Ground surface			
			Grout			
			10.0			Water level just Prior to setting screen –
			~~Grout mixture~~ Sand			
			20.0			
			Bentonite Pellets			
			25.0			
						PVC Screen+Riser
			Filter Pack			
			34.0			
			Well Screen			
			44.0			
			Trap			
			45.0			
			45.0 Boring Depth			

ENG FORM 1836 MAR 71 PREVIOUS EDITIONS ARE OBSOLETE. PROJECT HOLE NO.

DRILLING LOG

DIVISION	
INSTALLATION	
SHEET OF SHEETS	
1. PROJECT	
2. LOCATION (Coordinates or Station)	
3. DRILLING AGENCY	
4. HOLE NO. (As shown on drawing title and file number)	
5. NAME OF DRILLER	
6. DIRECTION OF HOLE ☐ VERTICAL ☐ INCLINED _____ DEG. FROM VERT.	
7. THICKNESS OF OVERBURDEN	
8. DEPTH DRILLED INTO ROCK	
9. TOTAL DEPTH OF HOLE	
10. SIZE AND TYPE OF BIT	
11. DATUM FOR ELEVATION SHOWN (TBM or MSL)	
12. MANUFACTURER'S DESIGNATION OF DRILL	
13. TOTAL NO. OF OVER-BURDEN SAMPLES TAKEN	DISTURBED / UNDISTURBED
14. TOTAL NUMBER CORE BOXES	
15. ELEVATION GROUND WATER	
16. DATE HOLE	STARTED / COMPLETED
17. ELEVATION TOP OF HOLE	
18. TOTAL CORE RECOVERY FOR BORING	%
19. SIGNATURE OF INSPECTOR	

ELEVATION a	DEPTH b	LEGEND c	CLASSIFICATION OF MATERIALS (Description) d	% CORE RECOVERY e	BOX OR SAMPLE NO. f	REMARKS (Drilling time, water loss, depth of weathering, etc., if significant) g
			Well No: WES-2-13C-88			Date well screen was set: 3/28/88
			+2.5			
			0.0 Ground surface			
			Grout mixture			Water level just Prior to setting screen –
			62.0			
			Bentonite Pellets			
			65.0			
						PVC Screen + Riser
			Filter Pack			
			69.3			
			Well Screen			
			79.3			
			Trap			
			80.3			
			83.3 Boring Depth			

ENG FORM 1836 PREVIOUS EDITIONS ARE OBSOLETE. PROJECT HOLE NO.

Hole No. WES-2-14C

DRILLING LOG	DIVISION U.S. Navy	INSTALLATION NWSC Crane Ind	SHEET 1 OF 17 SHEETS

1. PROJECT: Hydraulic Studies, DBG
2. LOCATION (Coordinates or Station):
3. DRILLING AGENCY: WES
4. HOLE NO. (As shown on drawing title and file number): 2-14C
5. NAME OF DRILLER: Dan Taylor
6. DIRECTION OF HOLE: ☒ VERTICAL ☐ INCLINED _____ DEG. FROM VERT.
7. THICKNESS OF OVERBURDEN: 8.4
8. DEPTH DRILLED INTO ROCK:
9. TOTAL DEPTH OF HOLE: 167.2
10. SIZE AND TYPE OF BIT: H.O. Wireline
11. DATUM FOR ELEVATION SHOWN (TBM or MSL): MSL
12. MANUFACTURER'S DESIGNATION OF DRILL: Failing 1500
13. TOTAL NO. OF OVER-BURDEN SAMPLES TAKEN: DISTURBED: UNDISTURBED:
14. TOTAL NUMBER CORE BOXES:
15. ELEVATION GROUND WATER:
16. DATE HOLE: STARTED 4/7/88 COMPLETED 4/13/88
17. ELEVATION TOP OF HOLE:
18. TOTAL CORE RECOVERY FOR BORING: %
19. SIGNATURE OF INSPECTOR: Geologist Richard [illegible]

ELEVATION a	DEPTH b	LEGEND c	CLASSIFICATION OF MATERIALS (Description) d	% CORE RECOVERY e	BOX OR SAMPLE NO. f	REMARKS (Drilling time, water loss, depth of weathering, etc., if significant) g
	0		Silty clay (CL), Br, soft, wet (Rain)			Ran 8" flight Auger from 0.0 to 8.4'
	1					
	2					
	3					
	4					
	5					
	6		Silty-Sandy clay (CL) y Br, v.firm, dry			
	7					Set 8" dia PVC Surface casing
	8					Top of Rock-8.4'
	9		Sandstone? (as below)			Ran R.R. Bit to 11.5'
	10					

ENG FORM 1836 MAR 71 PREVIOUS EDITIONS ARE OBSOLETE. PROJECT HOLE NO.

DRILLING LOG	DIVISION	INSTALLATION	SHEET 2 OF 17 SHEETS

1. PROJECT	10. SIZE AND TYPE OF BIT
2. LOCATION (Coordinates or Station)	11. DATUM FOR ELEVATION SHOWN (TBM or MSL)
3. DRILLING AGENCY	12. MANUFACTURER'S DESIGNATION OF DRILL
4. HOLE NO. (As shown on drawing title and file number) 2-14C	13. TOTAL NO. OF OVER-BURDEN SAMPLES TAKEN — DISTURBED — UNDISTURBED
5. NAME OF DRILLER	14. TOTAL NUMBER CORE BOXES
6. DIRECTION OF HOLE ☐ VERTICAL ☐ INCLINED ____ DEG. FROM VERT.	15. ELEVATION GROUND WATER
7. THICKNESS OF OVERBURDEN	16. DATE HOLE — STARTED — COMPLETED
8. DEPTH DRILLED INTO ROCK	17. ELEVATION TOP OF HOLE
9. TOTAL DEPTH OF HOLE	18. TOTAL CORE RECOVERY FOR BORING %
	19. SIGNATURE OF INSPECTOR

ELEVATION a	DEPTH b	LEGEND c	CLASSIFICATION OF MATERIALS (Description) d	% CORE RECOVERY e	BOX OR SAMPLE NO. f	REMARKS (Drilling time, water loss, depth of weathering, etc., if significant) g
	10					
	11			11.5		
	12		Sandstone, ytan, fine, highly oxidized and weathered, num wavy olive shale (clay) thin lens + pts, occ carbonaceous inclus.	Run1		Started coring w/ HQ wireline at 11.5'
	13					
	14					
	15					
	16			6.3 / 8.0		
	17			1.5 / 2.4		
	18					
	19		Core loss zone? (Probably conglomeritic)			
	20					

ENG FORM 1836 MAR 71 PREVIOUS EDITIONS ARE OBSOLETE. PROJECT HOLE NO.

Hole No. WFS-2-14C-80

DRILLING LOG	DIVISION	INSTALLATION	SHEET 3 OF 17 SHEETS

1. PROJECT
2. LOCATION (Coordinates or Station)
3. DRILLING AGENCY
4. HOLE NO. (As shown on drawing title and file number)
5. NAME OF DRILLER
6. DIRECTION OF HOLE ☐ VERTICAL ☐ INCLINED _____ DEG. FROM VERT.
7. THICKNESS OF OVERBURDEN
8. DEPTH DRILLED INTO ROCK
9. TOTAL DEPTH OF HOLE
10. SIZE AND TYPE OF BIT
11. DATUM FOR ELEVATION SHOWN (TBM or MSL)
12. MANUFACTURER'S DESIGNATION OF DRILL
13. TOTAL NO. OF OVER-BURDEN SAMPLES TAKEN | DISTURBED | UNDISTURBED
14. TOTAL NUMBER CORE BOXES
15. ELEVATION GROUND WATER
16. DATE HOLE | STARTED | COMPLETED
17. ELEVATION TOP OF HOLE
18. TOTAL CORE RECOVERY FOR BORING %
19. SIGNATURE OF INSPECTOR

ELEVATION a	DEPTH b	LEGEND c	CLASSIFICATION OF MATERIALS (Description) d	% CORE RECOVERY e	BOX OR SAMPLE NO. f	REMARKS (Drilling time, water loss, depth of weathering, etc., if significant) g
	20			20.2 / 20.3		pull depth
			Sandstone (cont.)	Run 2		
			reduction in sh pts below ~20.0', oxidized, Friable, cross bd,			
	21					
			(Jointing is apparently confined to bedding planes.)			
	22			4.1 / 4.0		
				+0.1		
	23					
	24					
				24.3		
				Run 3		
	25					
	26					
				9.6 / 9.9		
	27					
				~~-0.3~~ -0.2		
	28					
	29					
	30					

ENG FORM 1836 MAR 71 PREVIOUS EDITIONS ARE OBSOLETE. PROJECT HOLE NO.

DRILLING LOG	DIVISION	INSTALLATION	SHEET 4 OF 17 SHEETS

1. PROJECT	10. SIZE AND TYPE OF BIT
2. LOCATION (Coordinates or Station)	11. DATUM FOR ELEVATION SHOWN (TBM or MSL)
3. DRILLING AGENCY	12. MANUFACTURER'S DESIGNATION OF DRILL
4. HOLE NO. (As shown on drawing title and file number)	13. TOTAL NO. OF OVER-BURDEN SAMPLES TAKEN — DISTURBED — UNDISTURBED
5. NAME OF DRILLER	14. TOTAL NUMBER CORE BOXES
6. DIRECTION OF HOLE ☐ VERTICAL ☐ INCLINED _____ DEG. FROM VERT.	15. ELEVATION GROUND WATER
7. THICKNESS OF OVERBURDEN	16. DATE HOLE — STARTED — COMPLETED
8. DEPTH DRILLED INTO ROCK	17. ELEVATION TOP OF HOLE
9. TOTAL DEPTH OF HOLE	18. TOTAL CORE RECOVERY FOR BORING %
	19. SIGNATURE OF INSPECTOR

ELEVATION a	DEPTH b	LEGEND c	CLASSIFICATION OF MATERIALS (Description) d	% CORE RECOVERY e	BOX OR SAMPLE NO. f	REMARKS (Drilling time, water loss, depth of weathering, etc., if significant) g
	30		SS (cont.)			
	31					
	32					
	33					
	34			34.2		34.1 - Pull depth
	35			9.8/10.0		
	36			+0.1 -0.2		
	37					
	38					
	39		Base of oxidation ≈ 39.0'			
	40					

ENG FORM 1836 MAR 71 PREVIOUS EDITIONS ARE OBSOLETE. PROJECT HOLE NO.

Hole No. WES-2-14C-85

DRILLING LOG	DIVISION	INSTALLATION	SHEET 5 OF 17 SHEETS

1. PROJECT
2. LOCATION (Coordinates or Station)
3. DRILLING AGENCY
4. HOLE NO. (As shown on drawing title and file number)
5. NAME OF DRILLER
6. DIRECTION OF HOLE ☐ VERTICAL ☐ INCLINED _____ DEG. FROM VERT.
7. THICKNESS OF OVERBURDEN
8. DEPTH DRILLED INTO ROCK
9. TOTAL DEPTH OF HOLE
10. SIZE AND TYPE OF BIT
11. DATUM FOR ELEVATION SHOWN (TBM or MSL)
12. MANUFACTURER'S DESIGNATION OF DRILL
13. TOTAL NO. OF OVER-BURDEN SAMPLES TAKEN | DISTURBED | UNDISTURBED
14. TOTAL NUMBER CORE BOXES
15. ELEVATION GROUND WATER
16. DATE HOLE | STARTED | COMPLETED
17. ELEVATION TOP OF HOLE
18. TOTAL CORE RECOVERY FOR BORING %
19. SIGNATURE OF INSPECTOR

ELEVATION a	DEPTH b	LEGEND c	CLASSIFICATION OF MATERIALS (Description) d	% CORE RECOVERY e	BOX OR SAMPLE NO. f	REMARKS (Drilling time, water loss, depth of weathering, etc., if significant) g
	40		SS (Cont.)			
			(Below ~ 38.0' there are num. thin blk wavy shale lens + pts.)			
	41					
	42					
	43					
	44			43.9 / 44.2 Run 5		Pull depth
	45					
	46			1.2 / 3.9		
				~~1.0~~ 3		
	47		Base of PENN - 47.1'			
			Top of MISS (Hardinsburg fm)			
	48		Shale, Gn w/rBr mottling; mass, hd	48.1 Run 6		
	49			2.1 / 3.4		
	50			1.3		

ENG FORM 1836 PREVIOUS EDITIONS ARE OBSOLETE. PROJECT HOLE NO.

DRILLING LOG	DIVISION	INSTALLATION	SHEET 6 OF 17 SHEETS

1. PROJECT	10. SIZE AND TYPE OF BIT
2. LOCATION (Coordinates or Station)	11. DATUM FOR ELEVATION SHOWN (TBM or MSL)
3. DRILLING AGENCY	12. MANUFACTURER'S DESIGNATION OF DRILL
4. HOLE NO. (As shown on drawing title and file number)	13. TOTAL NO. OF OVER-BURDEN SAMPLES TAKEN — DISTURBED — UNDISTUR
5. NAME OF DRILLER	14. TOTAL NUMBER CORE BOXES
6. DIRECTION OF HOLE ☐ VERTICAL ☐ INCLINED _____ DEG. FROM VERT.	15. ELEVATION GROUND WATER
7. THICKNESS OF OVERBURDEN	16. DATE HOLE — STARTED — COMPLETED
8. DEPTH DRILLED INTO ROCK	17. ELEVATION TOP OF HOLE
9. TOTAL DEPTH OF HOLE	18. TOTAL CORE RECOVERY FOR BORING %
	19. SIGNATURE OF INSPECTOR

ELEVATION a	DEPTH b	LEGEND c	CLASSIFICATION OF MATERIALS (Description) d	% CORE RECOVERY e	BOX OR SAMPLE NO. f	REMARKS (Drilling time, water loss, depth of weathering, etc., if significant) g
	50		Sh (cont.)			
	51			51.5' Run 7		Reamed hole + set 6" dia PVC casing to 51.5'. Grouted casing into shale zone. Pumped only 15 gal grout mix in bot portion of hole. Put sand around upper zone of casing. (4/9/88)
	52					
	53					
	54			3.4 / 4.9		
	55			-1.5		
	56			56.4' Run 8		
	57					Shale ground away during coring operations
	58			5.6 / 8.0		
	59			-2.4		
	60					

ENG FORM 1836 PREVIOUS EDITIONS ARE OBSOLETE. PROJECT HOLE NO.

Hole No. WES-2-1/2-65

DRILLING LOG	DIVISION	INSTALLATION	SHEET 7 OF 17 SHEETS

1. PROJECT
2. LOCATION (Coordinates or Station)
3. DRILLING AGENCY
4. HOLE NO. (As shown on drawing title and file number)
5. NAME OF DRILLER
6. DIRECTION OF HOLE ☐ VERTICAL ☐ INCLINED _____ DEG. FROM VERT.
7. THICKNESS OF OVERBURDEN
8. DEPTH DRILLED INTO ROCK
9. TOTAL DEPTH OF HOLE
10. SIZE AND TYPE OF BIT
11. DATUM FOR ELEVATION SHOWN (TBM or MSL)
12. MANUFACTURER'S DESIGNATION OF DRILL
13. TOTAL NO. OF OVER-BURDEN SAMPLES TAKEN | DISTURBED | UNDISTURBED
14. TOTAL NUMBER CORE BOXES
15. ELEVATION GROUND WATER
16. DATE HOLE | STARTED | COMPLETED
17. ELEVATION TOP OF HOLE
18. TOTAL CORE RECOVERY FOR BORING %
19. SIGNATURE OF INSPECTOR

ELEVATION a	DEPTH b	LEGEND c	CLASSIFICATION OF MATERIALS (Description) d	% CORE RECOVERY e	BOX OR SAMPLE NO. f	REMARKS (Drilling time, water loss, depth of weathering, etc., if significant) g
	60		Sh (Cont.)			
	61					
	62					
	63					
			dGr + thi bd in bot zone			
	64			64.4		
				Run 9		
	65					
	66		Base of Hardinsburg - 66.0			
		0	Top of Golconda/Honey			
		20	Limestone, l-mgrBr, thi bd, m-c crystalline, occ blk thin shale lens & pts, fossiliferous, v hrd, v den	10.0 / 10.0		
	67	0				
		0				
	68					
		0				
	69	0				
	70					

ENG FORM 1836 MAR 71 PREVIOUS EDITIONS ARE OBSOLETE. PROJECT HOLE NO.

DRILLING LOG	DIVISION	INSTALLATION	SHEET 8 OF 17 SHEETS

1. PROJECT	10. SIZE AND TYPE OF BIT
2. LOCATION (Coordinates or Station)	11. DATUM FOR ELEVATION SHOWN (TBM or MSL)
3. DRILLING AGENCY	12. MANUFACTURER'S DESIGNATION OF DRILL
4. HOLE NO. (As shown on drawing title and file number)	13. TOTAL NO. OF OVER-BURDEN SAMPLES TAKEN — DISTURBED — UNDISTU
5. NAME OF DRILLER	14. TOTAL NUMBER CORE BOXES
6. DIRECTION OF HOLE ☐ VERTICAL ☐ INCLINED _____ DEG. FROM VERT.	15. ELEVATION GROUND WATER
7. THICKNESS OF OVERBURDEN	16. DATE HOLE — STARTED — COMPLETED
8. DEPTH DRILLED INTO ROCK	17. ELEVATION TOP OF HOLE
9. TOTAL DEPTH OF HOLE	18. TOTAL CORE RECOVERY FOR BORING %
	19. SIGNATURE OF INSPECTOR

ELEVATION a	DEPTH b	LEGEND c	CLASSIFICATION OF MATERIALS (Description) d	% CORE RECOVERY e	BOX OR SAMPLE NO. f	REMARKS (Drilling time, water loss, depth of weathering, etc., if significant) g
	70		LS (cont.)			
	71	0				
		5	Shale, Blk, th bd			
	72	5				
			Limestone, similar to above, but no sh pts, mass, occ stylolites, v hd, v den.			
	73	0				
	74			74.4		
				Run 6		
	75	0				
	76	0				
	77			10.0 / 10.0		
	78					
	79	0				
	80					

ENG FORM 1836 MAR 71 PREVIOUS EDITIONS ARE OBSOLETE. PROJECT HOLE NO.

Hole No. WES-7-14A-CS

DRILLING LOG	DIVISION	INSTALLATION	SHEET 9 OF 17 SHEETS

1. PROJECT	10. SIZE AND TYPE OF BIT
2. LOCATION (Coordinates or Station)	11. DATUM FOR ELEVATION SHOWN (TBM or MSL)
3. DRILLING AGENCY	12. MANUFACTURER'S DESIGNATION OF DRILL
4. HOLE NO. (As shown on drawing title and file number)	13. TOTAL NO. OF OVER-BURDEN SAMPLES TAKEN — DISTURBED — UNDISTURBED
5. NAME OF DRILLER	14. TOTAL NUMBER CORE BOXES
6. DIRECTION OF HOLE ☐ VERTICAL ☐ INCLINED _____ DEG. FROM VERT.	15. ELEVATION GROUND WATER
7. THICKNESS OF OVERBURDEN	16. DATE HOLE — STARTED — COMPLETED
8. DEPTH DRILLED INTO ROCK	17. ELEVATION TOP OF HOLE
9. TOTAL DEPTH OF HOLE	18. TOTAL CORE RECOVERY FOR BORING %
	19. SIGNATURE OF INSPECTOR

ELEVATION a	DEPTH b	LEGEND c	CLASSIFICATION OF MATERIALS (Description) d	% CORE RECOVERY e	BOX OR SAMPLE NO. f	REMARKS (Drilling time, water loss, depth of weathering, etc., if significant) g
	80	60/	Ls (cont.)			
			– stn + mea along st.			
	81					
	82					
	83					
		0				
	84					
		0	Base of Golconda / Honey	84.4		
			Top of Indian sprs.	Run 11		
	85		Shale, Blk, th bd, platy, indurated, carbonaceous			
	86					
	87			6.6 / 6.7		
	88			-0.1		
	89					
	90					

ENG FORM 1836 PREVIOUS EDITIONS ARE OBSOLETE PROJECT HOLE NO.

DRILLING LOG	DIVISION	INSTALLATION	SHEET 10 OF 17 SHEETS

1. PROJECT	10. SIZE AND TYPE OF BIT
2. LOCATION (Coordinates or Station)	11. DATUM FOR ELEVATION SHOWN (TBM or MSL)
3. DRILLING AGENCY	12. MANUFACTURER'S DESIGNATION OF DRILL
4. HOLE NO. (As shown on drawing title and file number)	13. TOTAL NO. OF OVER-BURDEN SAMPLES TAKEN — DISTURBED — UNDISTU
5. NAME OF DRILLER	14. TOTAL NUMBER CORE BOXES
6. DIRECTION OF HOLE ☐ VERTICAL ☐ INCLINED _____ DEG. FROM VERT.	15. ELEVATION GROUND WATER
7. THICKNESS OF OVERBURDEN	16. DATE HOLE — STARTED — COMPLETED
8. DEPTH DRILLED INTO ROCK	17. ELEVATION TOP OF HOLE
9. TOTAL DEPTH OF HOLE	18. TOTAL CORE RECOVERY FOR BORING %
	19. SIGNATURE OF INSPECTOR

ELEVATION a	DEPTH b	LEGEND c	CLASSIFICATION OF MATERIALS (Description) d	% CORE RECOVERY e	BOX OR SAMPLE NO. f	REMARKS (Drilling time, water loss, depth of weathering, etc., if significant) g
	90		Sh (cont.)			Reamed hole & ran 4" PVC casing to 91.0. Grouted lower portion of casing into shale. Back filled upper zone around casing w/sand. (4/12/88)
	91			91.1 / Run 12		
	92					
				2.8 / 3.3		
	93			-0.5		
	94			94.4 / Run 13		
	95					
	96					
	97			9.0 / 9.4		
	98			-0.4		
	99					
	100					

ENG FORM 1836 MAR 71 PREVIOUS EDITIONS ARE OBSOLETE. PROJECT HOLE NO.

Hole No. WES-7-14C-RS

DRILLING LOG	DIVISION	INSTALLATION	SHEET 11 OF 17 SHEETS

1. PROJECT	10. SIZE AND TYPE OF BIT
2. LOCATION (Coordinates or Station)	11. DATUM FOR ELEVATION SHOWN (TBM or MSL)
3. DRILLING AGENCY	12. MANUFACTURER'S DESIGNATION OF DRILL
4. HOLE NO. (As shown on drawing title and file number) 2-14C	13. TOTAL NO. OF OVER-BURDEN SAMPLES TAKEN: DISTURBED / UNDISTURBED
5. NAME OF DRILLER	14. TOTAL NUMBER CORE BOXES
6. DIRECTION OF HOLE ☐ VERTICAL ☐ INCLINED ____ DEG. FROM VERT.	15. ELEVATION GROUND WATER
7. THICKNESS OF OVERBURDEN	16. DATE HOLE: STARTED / COMPLETED
8. DEPTH DRILLED INTO ROCK	17. ELEVATION TOP OF HOLE
9. TOTAL DEPTH OF HOLE	18. TOTAL CORE RECOVERY FOR BORING %
	19. SIGNATURE OF INSPECTOR

ELEVATION a	DEPTH b	LEGEND c	CLASSIFICATION OF MATERIALS (Description) d	% CORE RECOVERY e	BOX OR SAMPLE NO. f	REMARKS (Drilling time, water loss, depth of weathering, etc., if significant) g
	100		Sh, (Cont.)			
	101					Losing ~ 25% of water return below 101.0'
			Limestone, Gr, th bd Shaley			
	102					
			Shale, olive Gr, mass.			
	103			103.8		
	104			Run 14		
	105		Ls concretions in bot ft.			
	106		(106.0') Top of Big Clifty SS -			
	107		Sandstone, l olive Gr, th bd, w/alter thin silty-shaley pts cross bd v fine, oxidized.	10.1/10.1		
	108					
	109					
	110					

ENG FORM 1836 PROJECT

HOLE NO. WLS-7-142-12

DRILLING LOG	DIVISION	INSTALLATION	SHEET 12 OF 17 SHEETS

1. PROJECT	10. SIZE AND TYPE OF BIT
2. LOCATION (Coordinates or Station)	11. DATUM FOR ELEVATION SHOWN (TBM or MSL)
3. DRILLING AGENCY	12. MANUFACTURER'S DESIGNATION OF DRILL
4. HOLE NO. (As shown on drawing title and file number) 2-14C	13. TOTAL NO. OF OVER-BURDEN SAMPLES TAKEN — DISTURBED — UNDISTURBED
5. NAME OF DRILLER	14. TOTAL NUMBER CORE BOXES
6. DIRECTION OF HOLE ☐ VERTICAL ☐ INCLINED ____ DEG. FROM VERT.	15. ELEVATION GROUND WATER
7. THICKNESS OF OVERBURDEN	16. DATE HOLE — STARTED — COMPLETED
8. DEPTH DRILLED INTO ROCK	17. ELEVATION TOP OF HOLE
9. TOTAL DEPTH OF HOLE	18. TOTAL CORE RECOVERY FOR BORING %
	19. SIGNATURE OF INSPECTOR

ELEVATION a	DEPTH b	LEGEND c	CLASSIFICATION OF MATERIALS (Description) d	% CORE RECOVERY e	BOX OR SAMPLE NO. f	REMARKS (Drilling time, water loss, depth of weathering, etc., if significant) g
	110		SS (Cont.)			Losing ~ 50% of water return below 110.0!
	111					
	112		gradational Change Sandstone, 1-m olive Tan, mass, rippled, v fine, sl. friable, hd, oxidized.			
	113					
	114			113.9 Run 15		
	115					
	116					
	117			10.1 / 10.1		
	118					
	119					
	120					

ENG FORM 1836 PREVIOUS EDITIONS ARE OBSOLETE — PROJECT — HOLE NO.

Hole No. WES-2-14-99

DRILLING LOG	DIVISION	INSTALLATION	SHEET 13 OF 17 SHEETS

1. PROJECT	10. SIZE AND TYPE OF BIT
2. LOCATION (Coordinates or Station)	11. DATUM FOR ELEVATION SHOWN (TBM or MSL)
3. DRILLING AGENCY	12. MANUFACTURER'S DESIGNATION OF DRILL
4. HOLE NO. (As shown on drawing title and file number) 2-14c	13. TOTAL NO. OF OVER-BURDEN SAMPLES TAKEN — DISTURBED — UNDISTURBED
5. NAME OF DRILLER	14. TOTAL NUMBER CORE BOXES
6. DIRECTION OF HOLE ☐ VERTICAL ☐ INCLINED ____ DEG. FROM VERT.	15. ELEVATION GROUND WATER
7. THICKNESS OF OVERBURDEN	16. DATE HOLE — STARTED — COMPLETED
8. DEPTH DRILLED INTO ROCK	17. ELEVATION TOP OF HOLE
9. TOTAL DEPTH OF HOLE	18. TOTAL CORE RECOVERY FOR BORING %
	19. SIGNATURE OF INSPECTOR

ELEVATION a	DEPTH b	LEGEND c	CLASSIFICATION OF MATERIALS (Description) d	% CORE RECOVERY e	BOX OR SAMPLE NO. f	REMARKS (Drilling time, water loss, depth of weathering, etc., if significant) g
	120		SS (cont)			
	121					
	122					
	123					
	124			124.0 / Run 16		
	125					
	126					Lost all water return at ~126.0'
	127			10.0 / 10.0		
	128					
	129					
	130					

ENG FORM

Hole No. WES-7-14-89

DRILLING LOG	DIVISION	INSTALLATION	SHEET 14 OF 17 SHEETS

1. PROJECT	10. SIZE AND TYPE OF BIT
2. LOCATION (Coordinates or Station)	11. DATUM FOR ELEVATION SHOWN (TBM or MSL)
3. DRILLING AGENCY	12. MANUFACTURER'S DESIGNATION OF DRILL
4. HOLE NO. (As shown on drawing title and file number) Z-14C	13. TOTAL NO. OF OVER-BURDEN SAMPLES TAKEN — DISTURBED — UNDISTUR
5. NAME OF DRILLER	14. TOTAL NUMBER CORE BOXES
6. DIRECTION OF HOLE ☐ VERTICAL ☐ INCLINED _____ DEG. FROM VERT.	15. ELEVATION GROUND WATER
7. THICKNESS OF OVERBURDEN	16. DATE HOLE — STARTED — COMPLETED
8. DEPTH DRILLED INTO ROCK	17. ELEVATION TOP OF HOLE
9. TOTAL DEPTH OF HOLE	18. TOTAL CORE RECOVERY FOR BORING %
	19. SIGNATURE OF INSPECTOR

ELEVATION a	DEPTH b	LEGEND c	CLASSIFICATION OF MATERIALS (Description) d	% CORE RECOVERY e	BOX OR SAMPLE NO. f	REMARKS (Drilling time, water loss, depth of weathering, etc., if significant) g
	130		Sandstone (cont)			
	131					
	132					
	133					
	134			134.0 Run 17		
	135					
	136					
	137			9.9 / 10.0		
	138			-0.1		
	139					
	140					

ENG FORM 1836

Hole No. WES-2-1-C-82

DRILLING LOG	DIVISION	INSTALLATION	SHEET 15 OF 17 SHEETS

1. PROJECT	10. SIZE AND TYPE OF BIT
2. LOCATION (Coordinates or Station)	11. DATUM FOR ELEVATION SHOWN (TBM or MSL)
3. DRILLING AGENCY	12. MANUFACTURER'S DESIGNATION OF DRILL
4. HOLE NO. (As shown on drawing title and file number) 2-14C	13. TOTAL NO. OF OVER-BURDEN SAMPLES TAKEN — DISTURBED — UNDISTURBED
5. NAME OF DRILLER	14. TOTAL NUMBER CORE BOXES
6. DIRECTION OF HOLE ☐ VERTICAL ☐ INCLINED ____ DEG. FROM VERT.	15. ELEVATION GROUND WATER
7. THICKNESS OF OVERBURDEN	16. DATE HOLE — STARTED — COMPLETED
8. DEPTH DRILLED INTO ROCK	17. ELEVATION TOP OF HOLE
9. TOTAL DEPTH OF HOLE	18. TOTAL CORE RECOVERY FOR BORING %
	19. SIGNATURE OF INSPECTOR

ELEVATION a	DEPTH b	LEGEND c	CLASSIFICATION OF MATERIALS (Description) d	% CORE RECOVERY e	BOX OR SAMPLE NO. f	REMARKS (Drilling time, water loss, depth of weathering, etc., if significant) g
	140		SS (cont.)			
		0				
		0				
		0				
	141					
		0				
		0				
	142					
		0				
		10				
	143					
		12				
		0		143.9 / 144.0		Pull depth
	144			Run 18		
		2				
		2	clay + silt lens at contact			
		2				
	145		Base of Big Clifty Fm - 145.0'			
			Top of Beech Creek fm.			
			Limestone, l-m gr Br, m-c crystaline, mass, fossiliferous, vhd, vden, occ stylolites			
	146	10				
	147			10.1 / 10.0		
	148	0		+0.1		
	149					
	150					

ENG FORM 1836

DRILLING LOG	DIVISION	INSTALLATION	SHEET 16 OF 17 SHEETS

1. PROJECT	10. SIZE AND TYPE OF BIT
2. LOCATION (Coordinates or Station)	11. DATUM FOR ELEVATION SHOWN (TBM or MSL)
3. DRILLING AGENCY	12. MANUFACTURER'S DESIGNATION OF DRILL
4. HOLE NO. (As shown on drawing title and file number) 2-14C	13. TOTAL NO. OF OVER-BURDEN SAMPLES TAKEN: DISTURBED / UNDISTURBED
5. NAME OF DRILLER	14. TOTAL NUMBER CORE BOXES
6. DIRECTION OF HOLE ☐ VERTICAL ☐ INCLINED ____ DEG. FROM VERT.	15. ELEVATION GROUND WATER
7. THICKNESS OF OVERBURDEN	16. DATE HOLE: STARTED / COMPLETED
8. DEPTH DRILLED INTO ROCK	17. ELEVATION TOP OF HOLE
9. TOTAL DEPTH OF HOLE	18. TOTAL CORE RECOVERY FOR BORING %
	19. SIGNATURE OF INSPECTOR

ELEVATION a	DEPTH b	LEGEND c	CLASSIFICATION OF MATERIALS (Description) d	% CORE RECOVERY e	BOX OR SAMPLE NO. f	REMARKS (Drilling time, water loss, depth of weathering, etc., if significant) g
	150		LS (cont.)			
	151					
	152					
		0				
		0				
	153					
		0				
	154	0		154.0 Run 19		12/13/88
		0				
	155		LS changes to dGr + has zones of wavy shaley pts.			
	156	10				
		5				
		10				
	157	10				Started getting back ~ 25% to 40% of water return.
		0				
	158	5		9.9 / 10.0		
		0				
	159			0.1		
		0				
	160	0				

ENG FORM 1836 PREVIOUS EDITIONS ARE OBSOLETE. PROJECT | HOLE NO.

Hole No. WES-2-14C.88

DRILLING LOG	DIVISION	INSTALLATION	SHEET 17 OF 17 SHEETS

1. PROJECT	10. SIZE AND TYPE OF BIT
2. LOCATION (Coordinates or Station)	11. DATUM FOR ELEVATION SHOWN (TBM or MSL)
3. DRILLING AGENCY	12. MANUFACTURER'S DESIGNATION OF DRILL
4. HOLE NO. (As shown on drawing title and file number) 2-14C	13. TOTAL NO. OF OVER-BURDEN SAMPLES TAKEN: DISTURBED / UNDISTURBED
5. NAME OF DRILLER	14. TOTAL NUMBER CORE BOXES
6. DIRECTION OF HOLE ☐ VERTICAL ☐ INCLINED ____ DEG. FROM VERT.	15. ELEVATION GROUND WATER
7. THICKNESS OF OVERBURDEN	16. DATE HOLE: STARTED / COMPLETED
8. DEPTH DRILLED INTO ROCK	17. ELEVATION TOP OF HOLE
9. TOTAL DEPTH OF HOLE	18. TOTAL CORE RECOVERY FOR BORING %
	19. SIGNATURE OF INSPECTOR

ELEVATION a	DEPTH b	LEGEND c	CLASSIFICATION OF MATERIALS (Description) d	% CORE RECOVERY e	BOX OR SAMPLE NO. f	REMARKS (Drilling time, water loss, depth of weathering, etc., if significant) g
	160		Ls (cont.)			
	161					
	162					
	163					
			Base of Beach Rock			
	164		Top of Eburien – 163.9	164.0		
			Shale, dGn, mass	Run 20		
			hd			
	165					
				2.9/3.2		
	166			-0.3		
	167			167.2		
			Bottom Depth 167.2 ft.			
	168					

ENG FORM ...

DRILLING LOG	DIVISION	INSTALLATION	SHEET OF SHEETS

1. PROJECT	10. SIZE AND TYPE OF BIT
2. LOCATION (Coordinates or Station)	11. DATUM FOR ELEVATION SHOWN (TBM or MSL)
3. DRILLING AGENCY	12. MANUFACTURER'S DESIGNATION OF DRILL
4. HOLE NO. (As shown on drawing title and file number)	13. TOTAL NO. OF OVER-BURDEN SAMPLES TAKEN — DISTURBED — UNDISTURBED
5. NAME OF DRILLER	14. TOTAL NUMBER CORE BOXES
6. DIRECTION OF HOLE ☐ VERTICAL ☐ INCLINED _____ DEG. FROM VERT.	15. ELEVATION GROUND WATER
7. THICKNESS OF OVERBURDEN	16. DATE HOLE — STARTED — COMPLETED
8. DEPTH DRILLED INTO ROCK	17. ELEVATION TOP OF HOLE
9. TOTAL DEPTH OF HOLE	18. TOTAL CORE RECOVERY FOR BORING %
	19. SIGNATURE OF INSPECTOR

ELEVATION a	DEPTH b	LEGEND c	CLASSIFICATION OF MATERIALS (Description) d	% CORE RECOVERY e	BOX OR SAMPLE NO. f	REMARKS (Drilling time, water loss, depth of weathering, etc., if significant) g
			Well No: WES-2-14CP3-88			Date well screen was set: 4/19/88
			+2.5 (716.26)			
			0.0 Ground surface (713.76)			
			Grout mixture			Water level just Prior to setting screen –
			7.0			
			Bentonite Pellets			
			10.0			PVC Screen & Ris
			Filter Pack			
676.66			37.1			
			Well Screen			
666.66			47.1			
			Trap			
			48.1			
			Boring Depth			

ENG FORM 1836 PREVIOUS EDITIONS ARE OBSOLETE PROJECT HOLE NO.

Hole No. WES-2-14C-88

DRILLING LOG	DIVISION	INSTALLATION	SHEET OF SHEETS

1. PROJECT	10. SIZE AND TYPE OF BIT
2. LOCATION (Coordinates or Station)	11. DATUM FOR ELEVATION SHOWN (TBM or MSL)
3. DRILLING AGENCY	12. MANUFACTURER'S DESIGNATION OF DRILL
4. HOLE NO. (As shown on drawing title and file number)	13. TOTAL NO. OF OVER-BURDEN SAMPLES TAKEN — DISTURBED — UNDISTURBED
5. NAME OF DRILLER	14. TOTAL NUMBER CORE BOXES
6. DIRECTION OF HOLE ☐ VERTICAL ☐ INCLINED ____ DEG. FROM VERT.	15. ELEVATION GROUND WATER
	16. DATE HOLE — STARTED — COMPLETED
7. THICKNESS OF OVERBURDEN	17. ELEVATION TOP OF HOLE
8. DEPTH DRILLED INTO ROCK	18. TOTAL CORE RECOVERY FOR BORING %
9. TOTAL DEPTH OF HOLE	19. SIGNATURE OF INSPECTOR

ELEVATION a	DEPTH b	LEGEND c	CLASSIFICATION OF MATERIALS (Description) d	% CORE RECOVERY e	BOX OR SAMPLE NO. f	REMARKS (Drilling time, water loss, depth of weathering, etc., if significant) g
			Well No.: WES-2-14C P2-88			Date well screen was set: 4/15/88
			+2.5 (716.43)			
			0.0' Ground surface 713.93			
			Grout mixture			Water level just Prior to setting screen –
			62.0			
			Bentonite Pellets			
			66.0			
						PVC Screen + Riser
			Filter Pack			
639.53			74.4			
			Well Screen			
629.53			84.4			
			Trap			
			85.4			
			85.4 Boring Depth			

ENG FORM 1836 PROJECT HOLE NO.

Hole No. WES-2-14C-88

DRILLING LOG	DIVISION	INSTALLATION	SHEET OF SHEETS

1. PROJECT	10. SIZE AND TYPE OF BIT
2. LOCATION (Coordinates or Station)	11. DATUM FOR ELEVATION SHOWN (TBM or MSL)
3. DRILLING AGENCY	12. MANUFACTURER'S DESIGNATION OF DRILL
4. HOLE NO. (As shown on drawing title and file number)	13. TOTAL NO. OF OVER-BURDEN SAMPLES TAKEN — DISTURBED — UNDISTU
5. NAME OF DRILLER	14. TOTAL NUMBER CORE BOXES
6. DIRECTION OF HOLE ☐ VERTICAL ☐ INCLINED ____ DEG. FROM VERT.	15. ELEVATION GROUND WATER
	16. DATE HOLE — STARTED — COMPLETED
7. THICKNESS OF OVERBURDEN	17. ELEVATION TOP OF HOLE
8. DEPTH DRILLED INTO ROCK	18. TOTAL CORE RECOVERY FOR BORING %
9. TOTAL DEPTH OF HOLE	19. SIGNATURE OF INSPECTOR

ELEVATION a	DEPTH b	LEGEND c	CLASSIFICATION OF MATERIALS (Description) d	% CORE RECOVERY e	BOX OR SAMPLE NO. f	REMARKS (Drilling time, water loss, depth of weathering, etc., if significant) g
			Well No: WES-2-14C-88			Date well screen was set: 4/13/88
			+2.5			
			0.0' Ground surface			
			Grout mixture			Water level just Prior to setting screen –
			101.0			
			Bentonite Pellets			
			106.0			
						PVC Riser + Screen
			Filter Pack			
			153.9			
			Well Screen			
			163.9			
			Trap			
			164.9			
			167.2 Boring Depth			

ENG FORM 1836 PROJECT HOLE NO.

Hole No. WES-2-15C-B

DRILLING LOG	DIVISION U.S. Navy	INSTALLATION Crane NWSC	SHEET 1 OF 8 SHEETS

1. PROJECT	Hydrogeology of DBG
2. LOCATION (Coordinates or Station)	
3. DRILLING AGENCY	WES
4. HOLE NO. (As shown on drawing title and file number)	2-15C
5. NAME OF DRILLER	Dan Taylor
6. DIRECTION OF HOLE	☑ VERTICAL ☐ INCLINED _____ DEG. FROM VERT.
7. THICKNESS OF OVERBURDEN	5.0'
8. DEPTH DRILLED INTO ROCK	
9. TOTAL DEPTH OF HOLE	20.2'
10. SIZE AND TYPE OF BIT	HQ Wireline
11. DATUM FOR ELEVATION SHOWN (TBM or MSL)	MSL
12. MANUFACTURER'S DESIGNATION OF DRILL	Failing 1500
13. TOTAL NO. OF OVER-BURDEN SAMPLES TAKEN	DISTURBED: UNDISTURBED:
14. TOTAL NUMBER CORE BOXES	
15. ELEVATION GROUND WATER	
16. DATE HOLE	STARTED 5/6/88 COMPLETED 5/10/88
17. ELEVATION TOP OF HOLE	
18. TOTAL CORE RECOVERY FOR BORING	%
19. SIGNATURE OF INSPECTOR	Geologist Richard W. Hunt

ELEVATION a	DEPTH b	LEGEND c	CLASSIFICATION OF MATERIALS (Description) d	% CORE RECOVERY e	BOX OR SAMPLE NO. f	REMARKS (Drilling time, water loss, depth of weathering, etc., if significant) g
	0		Silty clay (CL), yellow-Br, soft, moist,			0.0 - 5.0' drilled w/a 7" flite-Auger.
	1					
	2					
	3					
	4					
	5		Top of Rock - ~5.0'			Set 6" PVC Surface Casing to 5.0'
			Sandstone, ?			Ran R.R. Bit to 11.0'
	6		(R.R. Bit - No spls from 5.0 - 11.0'			
	7					
	8					
	9					
	10					

ENG FORM

Hole No. WFS-2-15C-B

DRILLING LOG	DIVISION	INSTALLATION	SHEET 2 OF 8 SHEETS

PROJECT	10. SIZE AND TYPE OF BIT
2. LOCATION (Coordinates or Station)	11. DATUM FOR ELEVATION SHOWN (TBM or MSL)
3. DRILLING AGENCY	12. MANUFACTURER'S DESIGNATION OF DRILL
4. HOLE NO. (As shown on drawing title and file number) 2-15C	13. TOTAL NO. OF OVER-BURDEN SAMPLES TAKEN — DISTURBED — UNDISTURBED
5. NAME OF DRILLER	14. TOTAL NUMBER CORE BOXES
6. DIRECTION OF HOLE ☐ VERTICAL ☐ INCLINED ____ DEG. FROM VERT.	15. ELEVATION GROUND WATER
7. THICKNESS OF OVERBURDEN	16. DATE HOLE — STARTED — COMPLETED
8. DEPTH DRILLED INTO ROCK	17. ELEVATION TOP OF HOLE
9. TOTAL DEPTH OF HOLE	18. TOTAL CORE RECOVERY FOR BORING %
	19. SIGNATURE OF INSPECTOR

ELEVATION a	DEPTH b	LEGEND c	CLASSIFICATION OF MATERIALS (Description) d	% CORE RECOVERY e	BOX OR SAMPLE NO. f	REMARKS (Drilling time, water loss, depth of weathering, etc., if significant) g
	10		(SS), Cont.			
				11.0'		
	11		Claystone, y tan firm, oxidized, silty	Run 1		Started coring at 11.0' w/ H.Q. wire line.
	12					
	13		Sandstone, l y Tan-Buff, th bd, v fine, occ d olive Gr th shale lens + pts, oxidized, lim inclus, hd	3.2/5.7		
	14			2.5		
	15		Conglomeritic Zone? (Core loss)			
	16		Br Fe Staining	16.7		
				Run 2		
	17					
	18			5.0/5.9		
	19			0.9		
	20					

ENG FORM 1836 PREVIOUS EDITIONS ARE OBSOLETE PROJECT HOLE NO.

Hole No. WES-2-15C-BB

DRILLING LOG	DIVISION	INSTALLATION	SHEET 3 OF 2 SHEETS

1. PROJECT	10. SIZE AND TYPE OF BIT
2. LOCATION (Coordinates or Station)	11. DATUM FOR ELEVATION SHOWN (TBM or MSL)
3. DRILLING AGENCY	12. MANUFACTURER'S DESIGNATION OF DRILL
4. HOLE NO. (As shown on drawing title and file number) 2-15C	13. TOTAL NO. OF OVER-BURDEN SAMPLES TAKEN: DISTURBED / UNDISTURBED
5. NAME OF DRILLER	14. TOTAL NUMBER CORE BOXES
6. DIRECTION OF HOLE ☐ VERTICAL ☐ INCLINED ____ DEG. FROM VERT.	15. ELEVATION GROUND WATER
7. THICKNESS OF OVERBURDEN	16. DATE HOLE: STARTED / COMPLETED
8. DEPTH DRILLED INTO ROCK	17. ELEVATION TOP OF HOLE
9. TOTAL DEPTH OF HOLE	18. TOTAL CORE RECOVERY FOR BORING %
	19. SIGNATURE OF INSPECTOR

ELEVATION a	DEPTH b	LEGEND c	CLASSIFICATION OF MATERIALS (Description) d	% CORE RECOVERY e	BOX OR SAMPLE NO. f	REMARKS (Drilling time, water loss, depth of weathering, etc., if significant) g
	20		SS, cont.			
	21		silty clay (highly wea sh (core loss interval)			
	22			22.6 / Run 3		
	23					
	24					
	25					
	26			10.0 / 10.0		
	27					
	28					
	29					
	30					

ENG FORM 1836 PROJECT HOLE NO.

HOLE NO. WCS-2-15C-88

DRILLING LOG	DIVISION	INSTALLATION	SHEET 4 OF 8 SHEETS

1. PROJECT	10. SIZE AND TYPE OF BIT
2. LOCATION (Coordinates or Station)	11. DATUM FOR ELEVATION SHOWN (TBM or MSL)
3. DRILLING AGENCY	12. MANUFACTURER'S DESIGNATION OF DRILL
4. HOLE NO. (As shown on drawing title and file number) 2-15C	13. TOTAL NO. OF OVER-BURDEN SAMPLES TAKEN: DISTURBED / UNDISTUR
5. NAME OF DRILLER	14. TOTAL NUMBER CORE BOXES
6. DIRECTION OF HOLE ☐ VERTICAL ☐ INCLINED ____ DEG. FROM VERT.	15. ELEVATION GROUND WATER
7. THICKNESS OF OVERBURDEN	16. DATE HOLE: STARTED / COMPLETED
8. DEPTH DRILLED INTO ROCK	17. ELEVATION TOP OF HOLE
9. TOTAL DEPTH OF HOLE	18. TOTAL CORE RECOVERY FOR BORING %
	19. SIGNATURE OF INSPECTOR

ELEVATION a	DEPTH b	LEGEND c	CLASSIFICATION OF MATERIALS (Description) d	% CORE RECOVERY e	BOX OR SAMPLE NO. f	REMARKS (Drilling time, water loss, depth of weathering, etc., if significant) g
	30	S	SS, cont.			
		0				
	31		random sh inclus.			
		0				
	32	0		32.6		
			SS is l Buff Gr, slight oxidation	Rung		
	33	0				
		0				
	34	0				
		0				
		0				
		10				
	35	0				
		0	SS has num alter thin Blk shale wavy lens + pts.	9.2/10.0		
	36	0		-0.8		
	37					
	38					
		0				
	39	0	Mauch Chunk fm - 39.2'			Penn Sediments
			Hardinsburg fm -			Miss "
	40					

ENG FORM 1836 PREVIOUS EDITIONS ARE OBSOLETE PROJECT HOLE NO.

Hole No. WES-2-15C-88

DRILLING LOG	DIVISION	INSTALLATION	SHEET 5 OF 8 SHEETS

1. PROJECT	10. SIZE AND TYPE OF BIT
2. LOCATION (Coordinates or Station)	11. DATUM FOR ELEVATION SHOWN (TBM or MSL)
3. DRILLING AGENCY	12. MANUFACTURER'S DESIGNATION OF DRILL
4. HOLE NO. (As shown on drawing title and file number) 2-15C	13. TOTAL NO. OF OVER-BURDEN SAMPLES TAKEN — DISTURBED — UNDISTURBED
5. NAME OF DRILLER	14. TOTAL NUMBER CORE BOXES
6. DIRECTION OF HOLE ☐ VERTICAL ☐ INCLINED ____ DEG. FROM VERT.	15. ELEVATION GROUND WATER
7. THICKNESS OF OVERBURDEN	16. DATE HOLE — STARTED — COMPLETED
8. DEPTH DRILLED INTO ROCK	17. ELEVATION TOP OF HOLE
9. TOTAL DEPTH OF HOLE	18. TOTAL CORE RECOVERY FOR BORING %
	19. SIGNATURE OF INSPECTOR

ELEVATION a	DEPTH b	LEGEND c	CLASSIFICATION OF MATERIALS (Description) d	% CORE RECOVERY e	BOX OR SAMPLE NO. f	REMARKS (Drilling time, water loss, depth of weathering, etc., if significant) g
	40		Shale, Gn, mass, Crumbly, soft to hd, occ dr-Br claystone mottled in shale			
	41					
				41.8		- Pull depth
	42					
				42.6 Runs		Reamed hole w/6" RR bit and set 4" PVC casing to 42.6' (only grouted the bot. ~10' of casing) 5/3/88
	43					
	44					
	45			1.0/5.6		
	46			4.6		— Note: Ground flushed away core spl in Run 5 during drilling
	47					
	48			48.2 Run 6		
	49		v hd. fragmented Ls inclus.			
	50					

ENG FORM

Hole No. WES-2-15C-BB

DRILLING LOG	DIVISION	INSTALLATION	SHEET 6 OF 8 SHEETS

1. PROJECT	10. SIZE AND TYPE OF BIT
2. LOCATION (Coordinates or Station)	11. DATUM FOR ELEVATION SHOWN (TBM or MSL)
3. DRILLING AGENCY	12. MANUFACTURER'S DESIGNATION OF DRILL
4. HOLE NO. (As shown on drawing title and file number) 2-15C	13. TOTAL NO. OF OVER-BURDEN SAMPLES TAKEN — DISTURBED — UNDISTUR
5. NAME OF DRILLER	14. TOTAL NUMBER CORE BOXES
6. DIRECTION OF HOLE ☐ VERTICAL ☐ INCLINED ____ DEG. FROM VERT.	15. ELEVATION GROUND WATER
7. THICKNESS OF OVERBURDEN	16. DATE HOLE — STARTED — COMPLETED
8. DEPTH DRILLED INTO ROCK	17. ELEVATION TOP OF HOLE
9. TOTAL DEPTH OF HOLE	18. TOTAL CORE RECOVERY FOR BORING %
	19. SIGNATURE OF INSPECTOR

ELEVATION a	DEPTH b	LEGEND c	CLASSIFICATION OF MATERIALS (Description) d	% CORE RECOVERY e	BOX OR SAMPLE NO. f	REMARKS (Drilling time, water loss, depth of weathering, etc., if significant) g
	50		Shale (cont.)			
	51			4.4 / 4.4		
	52		Shale changes to dGr, th bd, platey-fissile, hd, occ carbonaceous streaks.	52.6 Run 7		
	53					
	54					
	55					
	56			9.6 / 100		
				10.1		
	57					
	58					
	59	N 20 3 0	Base of Haldimsburg - 59.0' Top of Gatesonda / Herkimer Limestone, 1-m grBr, mass, coarse crystalline fossiliferous v hd, v dol			
	60					

ENG FORM 1836 PREVIOUS EDITIONS ARE OBSOLETE PROJECT HOLE NO.

Hole No. WES-2-15C-88

DRILLING LOG	DIVISION	INSTALLATION	SHEET 7 OF 8 SHEETS

1. PROJECT	10. SIZE AND TYPE OF BIT
2. LOCATION (Coordinates or Station)	11. DATUM FOR ELEVATION SHOWN (TBM or MSL)
3. DRILLING AGENCY	12. MANUFACTURER'S DESIGNATION OF DRILL
4. HOLE NO. (As shown on drawing title and file number) 2-15C	13. TOTAL NO. OF OVER-BURDEN SAMPLES TAKEN: DISTURBED / UNDISTURBED
5. NAME OF DRILLER	14. TOTAL NUMBER CORE BOXES
6. DIRECTION OF HOLE ☐ VERTICAL ☐ INCLINED ____ DEG. FROM VERT.	15. ELEVATION GROUND WATER
7. THICKNESS OF OVERBURDEN	16. DATE HOLE: STARTED / COMPLETED
8. DEPTH DRILLED INTO ROCK	17. ELEVATION TOP OF HOLE
9. TOTAL DEPTH OF HOLE	18. TOTAL CORE RECOVERY FOR BORING %
	19. SIGNATURE OF INSPECTOR

ELEVATION a	DEPTH b	LEGEND c	CLASSIFICATION OF MATERIALS (Description) d	% CORE RECOVERY e	BOX OR SAMPLE NO. f	REMARKS (Drilling time, water loss, depth of weathering, etc., if significant) g
	60		Ls (Cont.)			
	61	20, 15				
	62	0, 0, 0	Ls, has num dolive Gr sh lens	62.2 / 62.6 Run 8		Full depth (assumed due to void in Run 8) core loss in Run 7.
	63	5	void ?			
	64	0, 0	Limestone changes to m grBr, f-m crystaline.	2.7 / 2.7		Lost all drill water return at ~63.5' (void at same depth)
	65	0		65.3 Rung		
	66	0, 0				
	67			7.3 / 7.3		
	68	0				
	69					
	70					

ENG FORM 1836 PREVIOUS EDITIONS ARE OBSOLETE PROJECT HOLE NO.

HOLE NO. WES-2-15C-88

DRILLING LOG

DIVISION	
INSTALLATION	
SHEET	8 OF 8 SHEETS
1. PROJECT	
2. LOCATION (Coordinates or Station)	
3. DRILLING AGENCY	
4. HOLE NO. (As shown on drawing title and file number)	2-15C
5. NAME OF DRILLER	
6. DIRECTION OF HOLE	☐ VERTICAL ☐ INCLINED ____ DEG. FROM VERT.
7. THICKNESS OF OVERBURDEN	
8. DEPTH DRILLED INTO ROCK	
9. TOTAL DEPTH OF HOLE	
10. SIZE AND TYPE OF BIT	
11. DATUM FOR ELEVATION SHOWN (TBM or MSL)	
12. MANUFACTURER'S DESIGNATION OF DRILL	
13. TOTAL NO. OF OVER-BURDEN SAMPLES TAKEN	DISTURBED / UNDISTURBED
14. TOTAL NUMBER CORE BOXES	
15. ELEVATION GROUND WATER	
16. DATE HOLE	STARTED / COMPLETED
17. ELEVATION TOP OF HOLE	
18. TOTAL CORE RECOVERY FOR BORING	%
19. SIGNATURE OF INSPECTOR	

ELEVATION a	DEPTH b	LEGEND c	CLASSIFICATION OF MATERIALS (Description) d	% CORE RECOVERY e	BOX OR SAMPLE NO. f	REMARKS (Drilling time, water loss, depth of weathering, etc., if significant) g
	70	2	LS (cont.)			
	71	2				
	72					
				72.6 Run 10		9/10/88
		2	+ sh			
	73					
	74			3.7/3.7		
	75					
	76		shaley Base of Golconda/Haney Top of Indian Springs	76.3 Run 11		Blocked
	77		Shale, blk, th bd, platy, hd, carbonaceous			
	78			3.9/3.9		
	79					
	80		Bot. Depth - 80.2'	80.2'		

ENG FORM ...

Hole No. WES-2-15C-88

DRILLING LOG	DIVISION	INSTALLATION	SHEET OF SHEETS

1. PROJECT
2. LOCATION (Coordinates or Station)
3. DRILLING AGENCY
4. HOLE NO. (As shown on drawing title and file number)
5. NAME OF DRILLER
6. DIRECTION OF HOLE ☐ VERTICAL ☐ INCLINED _____ DEG. FROM VERT.
7. THICKNESS OF OVERBURDEN
8. DEPTH DRILLED INTO ROCK
9. TOTAL DEPTH OF HOLE
10. SIZE AND TYPE OF BIT
11. DATUM FOR ELEVATION SHOWN (TBM or MSL)
12. MANUFACTURER'S DESIGNATION OF DRILL
13. TOTAL NO. OF OVER-BURDEN SAMPLES TAKEN | DISTURBED | UNDIST
14. TOTAL NUMBER CORE BOXES
15. ELEVATION GROUND WATER
16. DATE HOLE | STARTED | COMPLETED
17. ELEVATION TOP OF HOLE
18. TOTAL CORE RECOVERY FOR BORING %
19. SIGNATURE OF INSPECTOR

ELEVATION a	DEPTH b	LEGEND c	CLASSIFICATION OF MATERIALS (Description) d	% CORE RECOVERY e	BOX OR SAMPLE NO. f	REMARKS (Drilling time, water loss, depth of weathering, etc., if significant) g
			Well No.: WES-2-15C-88			Date well screen was set: 5/10/88
			+2.5 715.88			
			0.0 Ground surface 713.38			
			Grout mixture			Water level just Prior to setting screen –
			53.0			
			Bentonite Pellets			
			56.0			
						PVC Screen + Riser
			Filter Pack			
			66.3			
			Well Screen			
			76.3			
			Trap			
			77.3			
			80.2 Boring Depth			

ENG FORM 1836 MAR 71 PREVIOUS EDITIONS ARE OBSOLETE. PROJECT HOLE NO.

Hole No. WES-2-15C-98

DRILLING LOG	DIVISION	INSTALLATION	SHEET OF SHEETS
1. PROJECT		10. SIZE AND TYPE OF BIT	
2. LOCATION (Coordinates or Station)		11. DATUM FOR ELEVATION SHOWN (TBM or MSL)	
3. DRILLING AGENCY		12. MANUFACTURER'S DESIGNATION OF DRILL	
4. HOLE NO. (As shown on drawing title and file number)		13. TOTAL NO. OF OVER-BURDEN SAMPLES TAKEN	DISTURBED / UNDISTURBED
5. NAME OF DRILLER		14. TOTAL NUMBER CORE BOXES	
6. DIRECTION OF HOLE ☐ VERTICAL ☐ INCLINED ____ DEG. FROM VERT.		15. ELEVATION GROUND WATER	
		16. DATE HOLE	STARTED / COMPLETED
7. THICKNESS OF OVERBURDEN		17. ELEVATION TOP OF HOLE	
8. DEPTH DRILLED INTO ROCK		18. TOTAL CORE RECOVERY FOR BORING %	
9. TOTAL DEPTH OF HOLE		19. SIGNATURE OF INSPECTOR	

ELEVATION a	DEPTH b	LEGEND c	CLASSIFICATION OF MATERIALS (Description) d	% CORE RECOVERY e	BOX OR SAMPLE NO. f	REMARKS (Drilling time, water loss, depth of weathering, etc., if significant) g
			Well No.: WES-2-15C/R2-88			Date well screen was set: 5/11/88
			+2.5			
			0.0 Ground surface			
			Grout mixture			Water level just Prior to setting screen –
			3.0			
			Bentonite Pellets			
			6.0			PVC Screen & Riser
			Filter Pack			
			29.2			
			Well Screen			
			39.2			
			Trap			
			40.2			
			40.2 Boring Depth			

ENG FORM 1836 PREVIOUS EDITIONS ARE OBSOLETE. PROJECT | HOLE NO.

Hole No. WES-2-16C-82

DRILLING LOG	DIVISION U.S. Navy	INSTALLATION Crane Ind Nwsc	SHEET 1 OF 10 SHEETS

1. PROJECT: Hydrogeologic Studies, DBG
2. LOCATION (Coordinates or Station):
3. DRILLING AGENCY: WES
4. HOLE NO. (As shown on drawing title and file number): 2-16C
5. NAME OF DRILLER: Dan Taylor
6. DIRECTION OF HOLE: ☑ VERTICAL ☐ INCLINED _____ DEG. FROM VERT.
7. THICKNESS OF OVERBURDEN: 5.0'
8. DEPTH DRILLED INTO ROCK:
9. TOTAL DEPTH OF HOLE: 91.3'
10. SIZE AND TYPE OF BIT: HQ wireline
11. DATUM FOR ELEVATION SHOWN (TBM or MSL): MSL
12. MANUFACTURER'S DESIGNATION OF DRILL: Failing 1500
13. TOTAL NO. OF OVER-BURDEN SAMPLES TAKEN: DISTURBED: UNDISTURBED:
14. TOTAL NUMBER CORE BOXES:
15. ELEVATION GROUND WATER:
16. DATE HOLE: STARTED 5/12/88 COMPLETED 5/16/88
17. ELEVATION TOP OF HOLE:
18. TOTAL CORE RECOVERY FOR BORING %
19. SIGNATURE OF INSPECTOR: Geologist Richard W. Hunt

ELEVATION a	DEPTH b	LEGEND c	CLASSIFICATION OF MATERIALS (Description) d	% CORE RECOVERY e	BOX OR SAMPLE NO. f	REMARKS (Drilling time, water loss, depth of weathering, etc., if significant) g
	0		Silty clay, Br-yTan, soft-mod, firm, moist (Residual Soil)			0.0-5.0' - Auger
	1					
	2					
	3					
	4					set PVC Surface Casing to 5.0'
	5		Top Rk - 5.0'	5.0'		
			Sandstone, yTan, thi bd, highly oxidized, friable, occ lim castings, occ thin clay lens (wea sh)			5.0 to 10.0 - R.R. 2.1
	6					
	7					
	8					
	9					started Coring w/HQ at 10 ft.
	10			10.0		

ENG FORM 1836 PREVIOUS EDITIONS ARE OBSOLETE PROJECT HOLE NO.

DRILLING LOG

DIVISION	
INSTALLATION	
SHEET 2 OF 10 SHEETS	
1. PROJECT	
2. LOCATION (Coordinates or Station)	
3. DRILLING AGENCY	
4. HOLE NO. (As shown on drawing title and file number)	2-16C
5. NAME OF DRILLER	
6. DIRECTION OF HOLE ☐ VERTICAL ☐ INCLINED _____ DEG. FROM VERT.	
7. THICKNESS OF OVERBURDEN	
8. DEPTH DRILLED INTO ROCK	
9. TOTAL DEPTH OF HOLE	
10. SIZE AND TYPE OF BIT	
11. DATUM FOR ELEVATION SHOWN (TBM or MSL)	
12. MANUFACTURER'S DESIGNATION OF DRILL	
13. TOTAL NO. OF OVER-BURDEN SAMPLES TAKEN	DISTURBED / UNDISTUR
14. TOTAL NUMBER CORE BOXES	
15. ELEVATION GROUND WATER	
16. DATE HOLE	STARTED / COMPLETED
17. ELEVATION TOP OF HOLE	
18. TOTAL CORE RECOVERY FOR BORING	%
19. SIGNATURE OF INSPECTOR	

ELEVATION a	DEPTH b	LEGEND c	CLASSIFICATION OF MATERIALS (Description) d	% CORE RECOVERY e	BOX OR SAMPLE NO. f	REMARKS (Drilling time, water loss, depth of weathering, etc., if significant) g
	10		Sandstone (cont.)	Run1		
		5				
		0				
	11	5				
		15				
		20				
	12			4.4 / 4.6		
		0				
		10				
	13			0.2		
		20				
		0				
	14		Lim stn along jts, most jts are along bd.			
		0		14.6		
		2		Run2		
	15	10				
		10				
		12				
	16					
		10				
	17	0		8.2 / 8.5		
			Clayshale, y Tan, highly oxidized, sdy			
	18	10		0.3		
		0				
	19					
		0				
		0				
	20					

ENG FORM 1836 PREVIOUS EDITIONS ARE OBSOLETE | PROJECT | HOLE NO.

Hole No. WFS-2-16C-c

DRILLING LOG

DIVISION	
INSTALLATION	
SHEET 3 OF 10 SHEETS	
1. PROJECT	
2. LOCATION (Coordinates or Station)	
3. DRILLING AGENCY	
4. HOLE NO. (As shown on drawing title and file number)	2-16C
5. NAME OF DRILLER	
6. DIRECTION OF HOLE	☐ VERTICAL ☐ INCLINED _____ DEG. FROM VERT.
7. THICKNESS OF OVERBURDEN	
8. DEPTH DRILLED INTO ROCK	
9. TOTAL DEPTH OF HOLE	
10. SIZE AND TYPE OF BIT	
11. DATUM FOR ELEVATION SHOWN (TBM or MSL)	
12. MANUFACTURER'S DESIGNATION OF DRILL	
13. TOTAL NO. OF OVER-BURDEN SAMPLES TAKEN	DISTURBED / UNDISTURBED
14. TOTAL NUMBER CORE BOXES	
15. ELEVATION GROUND WATER	
16. DATE HOLE	STARTED / COMPLETED
17. ELEVATION TOP OF HOLE	
18. TOTAL CORE RECOVERY FOR BORING	%
19. SIGNATURE OF INSPECTOR	

ELEVATION a	DEPTH b	LEGEND c	CLASSIFICATION OF MATERIALS (Description) d	% CORE RECOVERY e	BOX OR SAMPLE NO. f	REMARKS (Drilling time, water loss, depth of weathering, etc., if significant) g
	20					
	21		Sandstone,			
	22					
	23			23.1 Run 3		
	24					
	25					
	26		Sandstone + clay? (2.0' core loss in This zone) highly oxidized ss is d br Red, fragmented (Probable wea Conglomerate) Note (Red color in this zone could be dye?)	8.0 / 10.0		Caving during drilling between 25.5 + 28.3
	27			2.0		Lost ~ 50% of water return at ~ 26.6'
	28					
	29		Sandstone, y Tan, cross bd, f grained, oxidized friable, occ clay pts (wea sh)			
	30					

ENG FORM 1836 PROJECT

DRILLING LOG	DIVISION	INSTALLATION	SHEET 4 OF 10 SHEETS

1. PROJECT	10. SIZE AND TYPE OF BIT
2. LOCATION (Coordinates or Station)	11. DATUM FOR ELEVATION SHOWN (TBM or MSL)
3. DRILLING AGENCY	12. MANUFACTURER'S DESIGNATION OF DRILL
4. HOLE NO. (As shown on drawing title and file number) 2-16c	13. TOTAL NO. OF OVER-BURDEN SAMPLES TAKEN — DISTURBED — UNDISTURBED
5. NAME OF DRILLER	14. TOTAL NUMBER CORE BOXES
6. DIRECTION OF HOLE ☐ VERTICAL ☐ INCLINED _____ DEG. FROM VERT.	15. ELEVATION GROUND WATER
7. THICKNESS OF OVERBURDEN	16. DATE HOLE — STARTED — COMPLETED
8. DEPTH DRILLED INTO ROCK	17. ELEVATION TOP OF HOLE
9. TOTAL DEPTH OF HOLE	18. TOTAL CORE RECOVERY FOR BORING %
	19. SIGNATURE OF INSPECTOR

ELEVATION a	DEPTH b	LEGEND c	CLASSIFICATION OF MATERIALS (Description) d	% CORE RECOVERY e	BOX OR SAMPLE NO. f	REMARKS (Drilling time, water loss, depth of weathering, etc., if significant) g
	30		55 (cont.)			
		6				
	31	0				
		0				
	32	0				
	33			33.1		
		0		Run 4		
		0				
	34	0				
		0				
	35	14				
		0				
		0				
	36	0		8.5		
				8.5		
	37	5				
	38	0				
	39					
		0				
	40					

ENG FORM 1836 PROJECT HOLE NO.

Hole No. WES-2-16C-E6

DRILLING LOG	DIVISION	INSTALLATION	SHEET 5 OF 10 SHEETS

1. PROJECT
2. LOCATION (Coordinates or Station)
3. DRILLING AGENCY
4. HOLE NO. (As shown on drawing title and file number): 2-16C
5. NAME OF DRILLER
6. DIRECTION OF HOLE: ☐ VERTICAL ☐ INCLINED _____ DEG. FROM VERT.
7. THICKNESS OF OVERBURDEN
8. DEPTH DRILLED INTO ROCK
9. TOTAL DEPTH OF HOLE
10. SIZE AND TYPE OF BIT
11. DATUM FOR ELEVATION SHOWN (TBM or MSL)
12. MANUFACTURER'S DESIGNATION OF DRILL
13. TOTAL NO. OF OVER-BURDEN SAMPLES TAKEN: DISTURBED / UNDISTURBED
14. TOTAL NUMBER CORE BOXES
15. ELEVATION GROUND WATER
16. DATE HOLE: STARTED / COMPLETED
17. ELEVATION TOP OF HOLE
18. TOTAL CORE RECOVERY FOR BORING %
19. SIGNATURE OF INSPECTOR

ELEVATION a	DEPTH b	LEGEND c	CLASSIFICATION OF MATERIALS (Description) d	% CORE RECOVERY e	BOX OR SAMPLE NO. f	REMARKS (Drilling time, water loss, depth of weathering, etc., if significant) g
	40		Sandstone (cont.)			
		o				
	41					
				41.6		
				Run 5		
	42					
	43	o				
		o				
	44					
			SS below 44.2' is unoxidized, lGr w/increase in dk Gr sh pts (spaced 1/4" to 2" apart)			
	45			10.2/10.2		
		o				
	46		Core breaks easily along sh pts.			
	47	o				
	48					
	49					
	50					

ENG FORM 1836 PREVIOUS EDITIONS ARE OBSOLETE PROJECT HOLE NO.

Hole No. WES-2-16C-89

DRILLING LOG	DIVISION	INSTALLATION	SHEET 6 OF 10 SHEETS

1. PROJECT	10. SIZE AND TYPE OF BIT
2. LOCATION (Coordinates or Station)	11. DATUM FOR ELEVATION SHOWN (TBM or MSL)
3. DRILLING AGENCY	12. MANUFACTURER'S DESIGNATION OF DRILL
4. HOLE NO. (As shown on drawing title and file number) 2-16C	13. TOTAL NO. OF OVER-BURDEN SAMPLES TAKEN — DISTURBED — UNDISTURBED
5. NAME OF DRILLER	14. TOTAL NUMBER CORE BOXES
6. DIRECTION OF HOLE ☐ VERTICAL ☐ INCLINED ____ DEG. FROM VERT.	15. ELEVATION GROUND WATER
7. THICKNESS OF OVERBURDEN	16. DATE HOLE — STARTED — COMPLETED
8. DEPTH DRILLED INTO ROCK	17. ELEVATION TOP OF HOLE
9. TOTAL DEPTH OF HOLE	18. TOTAL CORE RECOVERY FOR BORING %
	19. SIGNATURE OF INSPECTOR

ELEVATION a	DEPTH b	LEGEND c	CLASSIFICATION OF MATERIALS (Description) d	% CORE RECOVERY e	BOX OR SAMPLE NO. f	REMARKS (Drilling time, water loss, depth of weathering, etc., if significant) g
	50		SS (cont.)			
	51					
				51.8		
	52			Run 6		5/13/88
	53					PENN
			(Base of Mansfield fm - 53.5')			
			(Hardinsburg fm)			MISS
	54		Shale, Gn, mass, w/ zones of Gn + dl br Red mottled claystone	5.3/5.8		Losing ~30% of water return
	55			-0.5		
	56					
	57					Reamed hole to 5 7/8" and set 4" PVC Casing to 57.6'.
				57.6		
				Run 7		Grouted casing in bot zone and back filled to surface w/ sand
	58					
	59			2.4/5.5'		5/16/88
				-3.1'		← Ground core away during drilling
	60					

ENG FORM 1836

Hole No. WES-2-16C-88

DRILLING LOG	DIVISION	INSTALLATION	SHEET 7 OF 10 SHEETS

1. PROJECT	10. SIZE AND TYPE OF BIT
2. LOCATION (Coordinates or Station)	11. DATUM FOR ELEVATION SHOWN (TBM or MSL)
3. DRILLING AGENCY	12. MANUFACTURER'S DESIGNATION OF DRILL
4. HOLE NO. (As shown on drawing title and file number) 2-16C	13. TOTAL NO. OF OVER-BURDEN SAMPLES TAKEN — DISTURBED — UNDISTURBED
5. NAME OF DRILLER	14. TOTAL NUMBER CORE BOXES
6. DIRECTION OF HOLE ☐ VERTICAL ☐ INCLINED ____ DEG. FROM VERT.	15. ELEVATION GROUND WATER
	16. DATE HOLE — STARTED — COMPLETED
	17. ELEVATION TOP OF HOLE
7. THICKNESS OF OVERBURDEN	18. TOTAL CORE RECOVERY FOR BORING %
8. DEPTH DRILLED INTO ROCK	19. SIGNATURE OF INSPECTOR
9. TOTAL DEPTH OF HOLE	

ELEVATION a	DEPTH b	LEGEND c	CLASSIFICATION OF MATERIALS (Description) d	% CORE RECOVERY e	BOX OR SAMPLE NO. f	REMARKS (Drilling time, water loss, depth of weathering, etc., if significant) g
	60.0		Shale (cont.)			
						100% water return after setting casing.
	61					
	62					
	63			63.1		
				Run 8		
	64					
	65					
	66					
				7.8		
	67			10.0		
				-2.2		Ground core away during drilling.
	68					
	69					
	70.					

ENG FORM 1836 PROJECT

Hole No. WES-2-16C-EB

DRILLING LOG	DIVISION	INSTALLATION	SHEET 8 OF 10 SHEETS

1. PROJECT	10. SIZE AND TYPE OF BIT
2. LOCATION (Coordinates or Station)	11. DATUM FOR ELEVATION SHOWN (TBM or MSL)
3. DRILLING AGENCY	12. MANUFACTURER'S DESIGNATION OF DRILL
4. HOLE NO. (As shown on drawing title and file number) 2-16C	13. TOTAL NO. OF OVER-BURDEN SAMPLES TAKEN — DISTURBED — UNDISTURBED
5. NAME OF DRILLER	14. TOTAL NUMBER CORE BOXES
6. DIRECTION OF HOLE ☐ VERTICAL ☐ INCLINED ____ DEG. FROM VERT.	15. ELEVATION GROUND WATER
7. THICKNESS OF OVERBURDEN	16. DATE HOLE — STARTED — COMPLETED
8. DEPTH DRILLED INTO ROCK	17. ELEVATION TOP OF HOLE
9. TOTAL DEPTH OF HOLE	18. TOTAL CORE RECOVERY FOR BORING %
	19. SIGNATURE OF INSPECTOR

ELEVATION a	DEPTH b	LEGEND c	CLASSIFICATION OF MATERIALS (Description) d	% CORE RECOVERY e	BOX OR SAMPLE NO. f	REMARKS (Drilling time, water loss, depth of weathering, etc., if significant) g
	70		Shale is dgnGr + th bd in bot. 4'			
	71					
	72					
	73			73.1 Run 9		
	74		(Base of Hardinsburg - 74.0') (Top of Golconda/Haney)			
	75		Limestone, mgrBr, m-c crystalline, fossiliferous, v hd, v clan.			
	76			9.7 / 10.0		
	77					
	78			0.3		
	79		Shale, Blk, th bd, hd			
	80					

ENG FORM

Hole No. WES-2-16C-88

DRILLING LOG	DIVISION	INSTALLATION	SHEET 9 OF 10 SHEETS

1. PROJECT	10. SIZE AND TYPE OF BIT
2. LOCATION (Coordinates or Station)	11. DATUM FOR ELEVATION SHOWN (TBM or MSL)
3. DRILLING AGENCY	12. MANUFACTURER'S DESIGNATION OF DRILL
4. HOLE NO. (As shown on drawing title and file number) 2-16C	13. TOTAL NO. OF OVER-BURDEN SAMPLES TAKEN: DISTURBED / UNDISTURBED
5. NAME OF DRILLER	14. TOTAL NUMBER CORE BOXES
6. DIRECTION OF HOLE ☐ VERTICAL ☐ INCLINED ____ DEG. FROM VERT.	15. ELEVATION GROUND WATER
7. THICKNESS OF OVERBURDEN	16. DATE HOLE: STARTED / COMPLETED
8. DEPTH DRILLED INTO ROCK	17. ELEVATION TOP OF HOLE
9. TOTAL DEPTH OF HOLE	18. TOTAL CORE RECOVERY FOR BORING %
	19. SIGNATURE OF INSPECTOR

ELEVATION a	DEPTH b	LEGEND c	CLASSIFICATION OF MATERIALS (Description) d	% CORE RECOVERY e	BOX OR SAMPLE NO. f	REMARKS (Drilling time, water loss, depth of weathering, etc., if significant) g
	80		Limestone, crystalline (as above)			
	81		- Lim stn			
	82		(Ls is oxidized between 80.0 & 83.9')			
	83			83.1 Run 10		
	84		Lim stn. Shaley Limestone dGr, th bd			
	85					
	86		Limestone, mgrBr, Crystaline (as above)			
	87					
	88		(Base of Colorado/Honey - 88.6') (Top of Indian Springs)			
	89		Shale, Blk, th bd Carbonaceous, platey-flakey, hd, one fossils.			
	90					

ENG FORM 1836 PROJECT HOLE NO.

HOLE NO. WFS-2-16C-8.

DRILLING LOG	DIVISION	INSTALLATION	SHEET 10 OF 10 SHEETS

1. PROJECT	10. SIZE AND TYPE OF BIT
2. LOCATION (Coordinates or Station)	11. DATUM FOR ELEVATION SHOWN (TBM or MSL)
3. DRILLING AGENCY	12. MANUFACTURER'S DESIGNATION OF DRILL
4. HOLE NO. (As shown on drawing title and file number) 2-16C	13. TOTAL NO. OF OVER-BURDEN SAMPLES TAKEN — DISTURBED — UNDISTURBED
5. NAME OF DRILLER	14. TOTAL NUMBER CORE BOXES
6. DIRECTION OF HOLE ☐ VERTICAL ☐ INCLINED _____ DEG. FROM VERT.	15. ELEVATION GROUND WATER
7. THICKNESS OF OVERBURDEN	16. DATE HOLE — STARTED — COMPLETED
8. DEPTH DRILLED INTO ROCK	17. ELEVATION TOP OF HOLE
9. TOTAL DEPTH OF HOLE	18. TOTAL CORE RECOVERY FOR BORING %
	19. SIGNATURE OF INSPECTOR

ELEVATION a	DEPTH b	LEGEND c	CLASSIFICATION OF MATERIALS (Description) d	% CORE RECOVERY e	BOX OR SAMPLE NO. f	REMARKS (Drilling time, water loss, depth of weathering, etc., if significant) g
	90					
	91					
	92		Bottom Depth- 91.3'			

ENG FORM 1836 PROJECT

Hole No. WES-2-16-88

DRILLING LOG	DIVISION	INSTALLATION	SHEET OF SHEETS

1. PROJECT	10. SIZE AND TYPE OF BIT
2. LOCATION (Coordinates or Station)	11. DATUM FOR ELEVATION SHOWN (TBM or MSL)
3. DRILLING AGENCY	12. MANUFACTURER'S DESIGNATION OF DRILL
4. HOLE NO. (As shown on drawing title and file number)	13. TOTAL NO. OF OVER-BURDEN SAMPLES TAKEN — DISTURBED — UNDISTURBED
5. NAME OF DRILLER	14. TOTAL NUMBER CORE BOXES
6. DIRECTION OF HOLE ☐ VERTICAL ☐ INCLINED ____ DEG. FROM VERT.	15. ELEVATION GROUND WATER
7. THICKNESS OF OVERBURDEN	16. DATE HOLE — STARTED — COMPLETED
8. DEPTH DRILLED INTO ROCK	17. ELEVATION TOP OF HOLE
9. TOTAL DEPTH OF HOLE	18. TOTAL CORE RECOVERY FOR BORING %
	19. SIGNATURE OF INSPECTOR

ELEVATION a	DEPTH b	LEGEND c	CLASSIFICATION OF MATERIALS (Description) d	% CORE RECOVERY e	BOX OR SAMPLE NO. f	REMARKS (Drilling time, water loss, depth of weathering, etc., if significant) g
			Well No. WES-2-16C-88			Date well screen was set: 5/16/88
			+2.5 725.36			
			0.0' Ground surface 722.86			
			Grout mixture			Water level just Prior to setting Screen –
			70.0'			
			Bentonite Pellets			
			73.0			
						PVC Riser + Screen
			Filter Pack			
644.26			78.6			
			Well Screen			
634.26			88.6			
			Trap			
			89.6			
			91.3 Boring Depth			

ENG FORM 1836 PREVIOUS EDITIONS ARE OBSOLETE PROJECT HOLE NO.

DRILLING LOG

DIVISION	
INSTALLATION	
SHEET	OF SHEETS
1. PROJECT	
2. LOCATION (Coordinates or Station)	
3. DRILLING AGENCY	
4. HOLE NO. (As shown on drawing title and file number)	
5. NAME OF DRILLER	
6. DIRECTION OF HOLE ☐ VERTICAL ☐ INCLINED ____ DEG. FROM VERT.	
7. THICKNESS OF OVERBURDEN	
8. DEPTH DRILLED INTO ROCK	
9. TOTAL DEPTH OF HOLE	
10. SIZE AND TYPE OF BIT	
11. DATUM FOR ELEVATION SHOWN (TBM or MSL)	
12. MANUFACTURER'S DESIGNATION OF DRILL	
13. TOTAL NO. OF OVER-BURDEN SAMPLES TAKEN	DISTURBED / UNDIST.
14. TOTAL NUMBER CORE BOXES	
15. ELEVATION GROUND WATER	
16. DATE HOLE	STARTED / COMPLETED
17. ELEVATION TOP OF HOLE	
18. TOTAL CORE RECOVERY FOR BORING	%
19. SIGNATURE OF INSPECTOR	

ELEVATION a	DEPTH b	LEGEND c	CLASSIFICATION OF MATERIALS (Description) d	% CORE RECOVERY e	BOX OR SAMPLE NO. f	REMARKS (Drilling time, water loss, depth of weathering, etc., if significant) g
			Well No: WES-2-16CP2-88			Date well screen was set: 5/17/88
			+2.5			
			0.0' Ground surface			
			Grout mixture			Water level just Prior to setting screen –
			7.0'			
			Bentonite Pellets			
			10.0			
						PVC Screen + Riser
			Filter Pack			
			43.5			
			Well Screen			
			53.5			
			Trap			
			54.5			
			54.5' Boring Depth			

ENG FORM 1836 PREVIOUS EDITIONS ARE OBSOLETE. PROJECT HOLE NO.

Hole No. WES-2-17C-2

DRILLING LOG	DIVISION U.S. Navy	INSTALLATION NWSC Crane Inc.	SHEET 1 OF 10 SHEETS

1. PROJECT Hydrogeologic Studies, DBG	10. SIZE AND TYPE OF BIT HQ wireline
2. LOCATION (Coordinates or Station)	11. DATUM FOR ELEVATION SHOWN (TBM or MSL) MSL
3. DRILLING AGENCY WES	12. MANUFACTURER'S DESIGNATION OF DRILL Failing 1500
4. HOLE NO. (As shown on drawing title and file number) 2-17C	13. TOTAL NO. OF OVER-BURDEN SAMPLES TAKEN — DISTURBED: — UNDISTURBED:
5. NAME OF DRILLER Dan Taylor	14. TOTAL NUMBER CORE BOXES
6. DIRECTION OF HOLE ☑ VERTICAL ☐ INCLINED ____ DEG. FROM VERT.	15. ELEVATION GROUND WATER
7. THICKNESS OF OVERBURDEN 7.2'	16. DATE HOLE — STARTED 5/19/88 — COMPLETED 5/23/88
8. DEPTH DRILLED INTO ROCK	17. ELEVATION TOP OF HOLE
9. TOTAL DEPTH OF HOLE 10.0'	18. TOTAL CORE RECOVERY FOR BORING %
	19. SIGNATURE OF INSPECTOR Geologist Richard W. Hunt

ELEVATION a	DEPTH b	LEGEND c	CLASSIFICATION OF MATERIALS (Description) d	% CORE RECOVERY e	BOX OR SAMPLE NO. f	REMARKS (Drilling time, water loss, depth of weathering, etc., if significant) g
	0		Silty clay, y tan-Br, soft - mod firm, moist to dry w/ depth.			0.0 - 7.2' - Auger
	1					
	2					
	3					
	4					
	5					
	6					
	7		Top Rock - 7.2'			
	8		Sandstone, y Tan, th bd, v fine-fine, highly oxidized, occ to num wavy clay (wea sh) pts, occ Lim castings, hd.			7.2' - 10.0' - R.R. Bit
	9		Shaley in some zones			Started Coring w/ HQ wireline at 10.0'
	10			10.0		

ENG FORM 1836

HOLE NO. WES-2-17C-88

DRILLING LOG	DIVISION	INSTALLATION	SHEET 2 OF 10 SHEETS

1. PROJECT	10. SIZE AND TYPE OF BIT
2. LOCATION (Coordinates or Station)	11. DATUM FOR ELEVATION SHOWN (TBM or MSL)
3. DRILLING AGENCY	12. MANUFACTURER'S DESIGNATION OF DRILL
4. HOLE NO. (As shown on drawing title and file number) 2-17C	13. TOTAL NO. OF OVER-BURDEN SAMPLES TAKEN — DISTURBED — UNDISTURBED
5. NAME OF DRILLER	14. TOTAL NUMBER CORE BOXES
6. DIRECTION OF HOLE ☐ VERTICAL ☐ INCLINED ____ DEG. FROM VERT.	15. ELEVATION GROUND WATER
7. THICKNESS OF OVERBURDEN	16. DATE HOLE — STARTED — COMPLETED
8. DEPTH DRILLED INTO ROCK	17. ELEVATION TOP OF HOLE
9. TOTAL DEPTH OF HOLE	18. TOTAL CORE RECOVERY FOR BORING %
	19. SIGNATURE OF INSPECTOR

ELEVATION a	DEPTH b	LEGEND c	CLASSIFICATION OF MATERIALS (Description) d	% CORE RECOVERY e	BOX OR SAMPLE NO. f	REMARKS (Drilling time, water loss, depth of weathering, etc., if significant) g
	10		SS (cont.)	Run 1		5/20/88
		0				
	11	10				
		0				
	12	0				
		0				
		0				
	13	0	Jts are lim stn			
			+ mostly along bd			
		0				
		0				
	14	0				
		96				
		0				
		0		9.6		
	15			10.2		
		0				
				-0.6		
	16	5				
		0				
	17	5				
		5				
		0				
	18	10				
		10				
	19	0				
		5				
		25				
	20	0				

ENG FORM 1836 PREVIOUS EDITIONS

Hole No. WES-2-17c-58

DRILLING LOG	DIVISION	INSTALLATION	SHEET 3 OF 10 SHEETS

1. PROJECT	10. SIZE AND TYPE OF BIT
2. LOCATION (Coordinates or Station)	11. DATUM FOR ELEVATION SHOWN (TBM or MSL)
3. DRILLING AGENCY	12. MANUFACTURER'S DESIGNATION OF DRILL
4. HOLE NO. (As shown on drawing title and file number) 2-17c	13. TOTAL NO. OF OVER-BURDEN SAMPLES TAKEN: DISTURBED / UNDISTURBED
5. NAME OF DRILLER	14. TOTAL NUMBER CORE BOXES
6. DIRECTION OF HOLE ☐ VERTICAL ☐ INCLINED ____ DEG. FROM VERT.	15. ELEVATION GROUND WATER
7. THICKNESS OF OVERBURDEN	16. DATE HOLE: STARTED / COMPLETED
8. DEPTH DRILLED INTO ROCK	17. ELEVATION TOP OF HOLE
9. TOTAL DEPTH OF HOLE	18. TOTAL CORE RECOVERY FOR BORING %
	19. SIGNATURE OF INSPECTOR

ELEVATION a	DEPTH b	LEGEND c	CLASSIFICATION OF MATERIALS (Description) d	% CORE RECOVERY e	BOX OR SAMPLE NO. f	REMARKS (Drilling time, water loss, depth of weathering, etc., if significant) g
	20		SS (cont.)	20.2		
				Run 2		
	21		SS is m-c grained w/ d br Red banding, Conglomeritic			
				2.7 / 2.9		
	22			-0.2 -0.1		
	23			23.0 / 23.7		Full depth
				Run 3		
	24					
	25					
	26		Clayshale, Buff-Br, th bd, mod soft, highly wea, w/num v fine ss/slst pts. hor bedding.	8.1 / 8.0		
	27					
				+0.1		
	28					
	29					
	30					

ENG FORM 1836

Hole No. WES-2-17C-2E

DRILLING LOG	DIVISION	INSTALLATION	SHEET 4 OF 10 SHEETS

1. PROJECT	10. SIZE AND TYPE OF BIT
2. LOCATION (Coordinates or Station)	11. DATUM FOR ELEVATION SHOWN (TBM or MSL)
3. DRILLING AGENCY	12. MANUFACTURER'S DESIGNATION OF DRILL
4. HOLE NO. (As shown on drawing title and file number) 2-17C	13. TOTAL NO. OF OVER-BURDEN SAMPLES TAKEN — DISTURBED — UNDISTUR
5. NAME OF DRILLER	14. TOTAL NUMBER CORE BOXES
6. DIRECTION OF HOLE ☐ VERTICAL ☐ INCLINED ____ DEG. FROM VERT.	15. ELEVATION GROUND WATER
7. THICKNESS OF OVERBURDEN	16. DATE HOLE — STARTED — COMPLETED
8. DEPTH DRILLED INTO ROCK	17. ELEVATION TOP OF HOLE
9. TOTAL DEPTH OF HOLE	18. TOTAL CORE RECOVERY FOR BORING %
	19. SIGNATURE OF INSPECTOR

ELEVATION a	DEPTH b	LEGEND c	CLASSIFICATION OF MATERIALS (Description) d	% CORE RECOVERY e	BOX OR SAMPLE NO. f	REMARKS (Drilling time, water loss, depth of weathering, etc., if significant) g
	30		Claystone (cont.)			
				31.1 Run 4		Lost all water return at ~31.0'
	31		Highly wea Conglomerate zone ?, Lost most of core during drilling, SS & Clay ?, fragmented, highly oxidized			
	32					
	33			1.2/5.6		Soft drilling. Caving in zone between 31.1 + 35.7 during drilling.
	34			4.4		
	35					
	36		Claystone, m-d Gr, th bd, silty-sdy, blocky, num small Carbonaceous inclus.	36.7 Run 5		
	37					
	38			2.6/3.0		
				0.4		
	39		Sandstone, Buff-y Br, th bd, f grained, hd, occ shale pts.	39.7 Run 6		
	40					

ENG FORM 1836

Hole No. WES-2-17C-82

DRILLING LOG	DIVISION	INSTALLATION	SHEET 5 OF 10 SHEETS

1. PROJECT	10. SIZE AND TYPE OF BIT
2. LOCATION (Coordinates or Station)	11. DATUM FOR ELEVATION SHOWN (TBM or MSL)
3. DRILLING AGENCY	12. MANUFACTURER'S DESIGNATION OF DRILL
4. HOLE NO. (As shown on drawing title and file number) 2-17C	13. TOTAL NO. OF OVER-BURDEN SAMPLES TAKEN — DISTURBED — UNDISTURBED
5. NAME OF DRILLER	14. TOTAL NUMBER CORE BOXES
6. DIRECTION OF HOLE ☐ VERTICAL ☐ INCLINED ____ DEG. FROM VERT.	15. ELEVATION GROUND WATER
7. THICKNESS OF OVERBURDEN	16. DATE HOLE — STARTED — COMPLETED
8. DEPTH DRILLED INTO ROCK	17. ELEVATION TOP OF HOLE
9. TOTAL DEPTH OF HOLE	18. TOTAL CORE RECOVERY FOR BORING %
	19. SIGNATURE OF INSPECTOR

ELEVATION a	DEPTH b	LEGEND c	CLASSIFICATION OF MATERIALS (Description) d	% CORE RECOVERY e	BOX OR SAMPLE NO. f	REMARKS (Drilling time, water loss, depth of weathering, etc., if significant) g
	40		Sandstone (cont.)			
	41			3.4/3.4		
	42					
	43			43.1 Run 7		
			highly oxidized, rusty Br.			
	44					
	45			2.9/3.4 -0.5		
	46			46.5 Run 8		
	47					
	48			6.4/6.6		
	49					
			Sandstone, similar to above but 1-m Cr unoxidized, w/ num	-0.1		
	50					

ENG FORM 1836 PROJECT

DRILLING LOG

DIVISION	
INSTALLATION	
SHEET 6 OF 10 SHEETS	
1. PROJECT	
2. LOCATION (Coordinates or Station)	
3. DRILLING AGENCY	
4. HOLE NO. (As shown on drawing title and file number)	2-17C
5. NAME OF DRILLER	
6. DIRECTION OF HOLE ☐ VERTICAL ☐ INCLINED _____ DEG. FROM VERT.	
7. THICKNESS OF OVERBURDEN	
8. DEPTH DRILLED INTO ROCK	
9. TOTAL DEPTH OF HOLE	
10. SIZE AND TYPE OF BIT	
11. DATUM FOR ELEVATION SHOWN (TBM or MSL)	
12. MANUFACTURER'S DESIGNATION OF DRILL	
13. TOTAL NO. OF OVER-BURDEN SAMPLES TAKEN	DISTURBED / UNDISTUR
14. TOTAL NUMBER CORE BOXES	
15. ELEVATION GROUND WATER	
16. DATE HOLE	STARTED / COMPLETED
17. ELEVATION TOP OF HOLE	
18. TOTAL CORE RECOVERY FOR BORING %	
19. SIGNATURE OF INSPECTOR	

ELEVATION a	DEPTH b	LEGEND c	CLASSIFICATION OF MATERIALS (Description) d	% CORE RECOVERY e	BOX OR SAMPLE NO. f	REMARKS (Drilling time, water loss, depth of weathering, etc., if significant) g
	50		dGr wavy shale pts.			
	51		Core breaks easily along sh pts			
	52					
	53			53.0 / 53.1 Run 9		Full depth
	54					
	55					
		o	Lim stn			
	56			6.7 / 6.6		
	57			~~70.1~~		Losing all water return.
	58					
	59					
			(Base of Mansfield fm)	59.7		PENN 59.7 MISS
	60		(Hardinsburg fm)	Run 10		

ENG FORM 1836 PROJECT HOLE NO.

Hole No. WES-2-17C-8

DRILLING LOG	DIVISION	INSTALLATION	SHEET 7 OF 10 SHEETS

1. PROJECT	10. SIZE AND TYPE OF BIT
2. LOCATION (Coordinates or Station)	11. DATUM FOR ELEVATION SHOWN (TBM or MSL)
3. DRILLING AGENCY	12. MANUFACTURER'S DESIGNATION OF DRILL
4. HOLE NO. (As shown on drawing title and file number) 2-17C	13. TOTAL NO. OF OVER-BURDEN SAMPLES TAKEN — DISTURBED — UNDISTURBED
5. NAME OF DRILLER	14. TOTAL NUMBER CORE BOXES
6. DIRECTION OF HOLE ☐ VERTICAL ☐ INCLINED ____ DEG. FROM VERT.	15. ELEVATION GROUND WATER
7. THICKNESS OF OVERBURDEN	16. DATE HOLE — STARTED — COMPLETED
8. DEPTH DRILLED INTO ROCK	17. ELEVATION TOP OF HOLE
9. TOTAL DEPTH OF HOLE	18. TOTAL CORE RECOVERY FOR BORING %
	19. SIGNATURE OF INSPECTOR

ELEVATION a	DEPTH b	LEGEND c	CLASSIFICATION OF MATERIALS (Description) d	% CORE RECOVERY e	BOX OR SAMPLE NO. f	REMARKS (Drilling time, water loss, depth of weathering, etc., if significant) g
	60		Shale, Gn, mass hd, Crumbly			
	61					Note: Hole was caving between 31 & 35'. Had to drill down 6" steel casing past this zone too set 4" PVC to bot. Then removed steel casing.
	62			2.0/3.4 .1.4		
	63			63.1		
	64		Claystone, Gn + dbr Red, mottled, hard fractured, sbty			Reamed Hole to 65.9 w 5 7/8" dia R.R. Bit + set 4" PVC Casing. Casing Grouted in bot. zone and back filled w/sand to surface. 5/23/88
	65					
	66			65.9 Run 11		
	67					
	68			5.4 .7.2		
	69			-1.8		Ground core away during drilling
	70					

ENG FORM 1836 PROJECT

Hole No. W1-3-2-17C-48

DRILLING LOG	DIVISION	INSTALLATION	SHEET 8 OF 10 SHEETS

1. PROJECT	10. SIZE AND TYPE OF BIT
2. LOCATION (Coordinates or Station)	11. DATUM FOR ELEVATION SHOWN (TBM or MSL)
3. DRILLING AGENCY	12. MANUFACTURER'S DESIGNATION OF DRILL
4. HOLE NO. (As shown on drawing title and file number) 2-17C	13. TOTAL NO. OF OVER-BURDEN SAMPLES TAKEN — DISTURBED — UNDISTURBED
5. NAME OF DRILLER	14. TOTAL NUMBER CORE BOXES
6. DIRECTION OF HOLE ☐ VERTICAL ☐ INCLINED _____ DEG. FROM VERT.	15. ELEVATION GROUND WATER
7. THICKNESS OF OVERBURDEN	16. DATE HOLE — STARTED — COMPLETED
8. DEPTH DRILLED INTO ROCK	17. ELEVATION TOP OF HOLE
9. TOTAL DEPTH OF HOLE	18. TOTAL CORE RECOVERY FOR BORING %
	19. SIGNATURE OF INSPECTOR

ELEVATION a	DEPTH b	LEGEND c	CLASSIFICATION OF MATERIALS (Description) d	% CORE RECOVERY e	BOX OR SAMPLE NO. f	REMARKS (Drilling time, water loss, depth of weathering, etc., if significant) g
	70		Claystone, (cont.)			
	71					100% water return after setting casing
	72		Shale, dGr, th bd, platey-flakey, hd, slightly carbonaceous			
	73			73.1 Run 12		
	74					
	75					
	76			4.5 / 5.8		Ground core away during drilling
	77			1.3		
	78					
	79			78.9 Run 13		
	80					

ENG FORM 1836 PROJECT

Hole No. WES-2-17C-88

DRILLING LOG	DIVISION	INSTALLATION	SHEET 9 OF 10 SHEETS

1. PROJECT	10. SIZE AND TYPE OF BIT
2. LOCATION (Coordinates or Station)	11. DATUM FOR ELEVATION SHOWN (TBM or MSL)
3. DRILLING AGENCY	12. MANUFACTURER'S DESIGNATION OF DRILL
4. HOLE NO. (As shown on drawing title and file number) 2-17C	13. TOTAL NO. OF OVER-BURDEN SAMPLES TAKEN: DISTURBED / UNDISTURBED
5. NAME OF DRILLER	14. TOTAL NUMBER CORE BOXES
6. DIRECTION OF HOLE ☐ VERTICAL ☐ INCLINED ____ DEG. FROM VERT.	15. ELEVATION GROUND WATER
7. THICKNESS OF OVERBURDEN	16. DATE HOLE: STARTED / COMPLETED
8. DEPTH DRILLED INTO ROCK	17. ELEVATION TOP OF HOLE
9. TOTAL DEPTH OF HOLE	18. TOTAL CORE RECOVERY FOR BORING %
	19. SIGNATURE OF INSPECTOR

ELEVATION a	DEPTH b	LEGEND c	CLASSIFICATION OF MATERIALS (Description) d	% CORE RECOVERY e	BOX OR SAMPLE NO. f	REMARKS (Drilling time, water loss, depth of weathering, etc., if significant) g
	80		Shale (cont.)			
	81			4.0/4.2		
	82			-0.2		
	83			83.1		
	84					
	85		Base of Hardinsburg - 85.0' Top of Golconda/Harley			Losing 25-50% of water return below ≈ 84'
	86		Limestone, mgrBr, m. Crystaline, mass, fossiliferous, v hd, v den			
			Lim stn	9.5/10.0		
	87			-0.5		
	88					
	89		Shaley Limestone th bd, d Gr, fossils			
	90					

ENG FORM

Hole No. WFS-2-17-88

DRILLING LOG	DIVISION	INSTALLATION	SHEET 10 OF 10 SHEETS

1. PROJECT
2. LOCATION (Coordinates or Station)
3. DRILLING AGENCY
4. HOLE NO. (As shown on drawing title and file number) 2-17C
5. NAME OF DRILLER
6. DIRECTION OF HOLE ☐ VERTICAL ☐ INCLINED _____ DEG. FROM VERT.
7. THICKNESS OF OVERBURDEN
8. DEPTH DRILLED INTO ROCK
9. TOTAL DEPTH OF HOLE
10. SIZE AND TYPE OF BIT
11. DATUM FOR ELEVATION SHOWN (TBM or MSL)
12. MANUFACTURER'S DESIGNATION OF DRILL
13. TOTAL NO. OF OVER-BURDEN SAMPLES TAKEN | DISTURBED | UNDISTUR
14. TOTAL NUMBER CORE BOXES
15. ELEVATION GROUND WATER
16. DATE HOLE | STARTED | COMPLETED
17. ELEVATION TOP OF HOLE
18. TOTAL CORE RECOVERY FOR BORING %
19. SIGNATURE OF INSPECTOR

ELEVATION a	DEPTH b	LEGEND c	CLASSIFICATION OF MATERIALS (Description) d	% CORE RECOVERY e	BOX OR SAMPLE NO. f	REMARKS (Drilling time, water loss, depth of weathering, etc., if significant) g
	90		Shaley Ls (cont.)			
		0	Lim sh			
	91		Limey shale, d Gr			
	92		Limestone, m gr Br. Crystalline (as above)			
	93			93.1 / Runs		
		90	just touched it; Lim sh			
	94	10				
	95					
	96		Base of Cokonta/Haney - 96.1' Top of Indian Springs	7.0 / 7.0		
	97		Shale, Blk, th bd, carbonaceous, hd			
	98					
	99					
	100			100.1		Bot. Depth - 100.1'

ENG FORM 1836 PROJECT HOLE NO.

Hole No. WES-2-17C-88

DRILLING LOG	DIVISION	INSTALLATION	SHEET OF SHEETS

1. PROJECT	10. SIZE AND TYPE OF BIT
2. LOCATION (Coordinates or Station)	11. DATUM FOR ELEVATION SHOWN (TBM or MSL)
3. DRILLING AGENCY	12. MANUFACTURER'S DESIGNATION OF DRILL
4. HOLE NO. (As shown on drawing title and file number)	13. TOTAL NO. OF OVER-BURDEN SAMPLES TAKEN — DISTURBED — UNDISTURBED
5. NAME OF DRILLER	14. TOTAL NUMBER CORE BOXES
6. DIRECTION OF HOLE ☐ VERTICAL ☐ INCLINED _____ DEG. FROM VERT.	15. ELEVATION GROUND WATER
7. THICKNESS OF OVERBURDEN	16. DATE HOLE — STARTED — COMPLETED
8. DEPTH DRILLED INTO ROCK	17. ELEVATION TOP OF HOLE
9. TOTAL DEPTH OF HOLE	18. TOTAL CORE RECOVERY FOR BORING %
	19. SIGNATURE OF INSPECTOR

ELEVATION a	DEPTH b	LEGEND c	CLASSIFICATION OF MATERIALS (Description) d	% CORE RECOVERY e	BOX OR SAMPLE NO. f	REMARKS (Drilling time, water loss, depth of weathering, etc., if significant) g
			Well No. WES-2-17C-88			Date well screen was set: 5/23/88
			+2.5			
			0.0 Ground surface			
			Grout mixture			Water level just Prior to setting screen –
			78.0			
			Bentonite Pellets			
			83.0			
			Filter Pack			PVC Screen + Riser
			86.1			
			Well Screen			
			96.1			
			Trap			
			97.1			
			100.1 Boring Depth			

ENG FORM 1836 PREVIOUS EDITIONS ARE OBSOLETE PROJECT HOLE NO.

DRILLING LOG	DIVISION	INSTALLATION	SHEET OF SHEETS

1. PROJECT	10. SIZE AND TYPE OF BIT
2. LOCATION (Coordinates or Station)	11. DATUM FOR ELEVATION SHOWN (TBM or MSL)
3. DRILLING AGENCY	12. MANUFACTURER'S DESIGNATION OF DRILL
4. HOLE NO. (As shown on drawing title and file number)	13. TOTAL NO. OF OVER-BURDEN SAMPLES TAKEN — DISTURBED — UNDISTU
5. NAME OF DRILLER	14. TOTAL NUMBER CORE BOXES
6. DIRECTION OF HOLE ☐ VERTICAL ☐ INCLINED ____ DEG. FROM VERT.	15. ELEVATION GROUND WATER
7. THICKNESS OF OVERBURDEN	16. DATE HOLE — STARTED — COMPLETED
8. DEPTH DRILLED INTO ROCK	17. ELEVATION TOP OF HOLE
9. TOTAL DEPTH OF HOLE	18. TOTAL CORE RECOVERY FOR BORING %
	19. SIGNATURE OF INSPECTOR

ELEVATION a	DEPTH b	LEGEND c	CLASSIFICATION OF MATERIALS (Description) d	% CORE RECOVERY e	BOX OR SAMPLE NO. f	REMARKS (Drilling time, water loss, depth of weathering, etc., if significant) g
			Well No.: WES-2-17CP2-88			Date well screen was set: 5/26/88
			+2.5			
			0.0' Ground surface			
			Grout			
			9.0			Water level just Prior to setting screen –
			~~Grout mixture~~ Sand			
			35.0			
			Bentonite Pellets			
			38.0			PVC Riser + Screen
			Filter Pack			
			49.7			
			Well Screen			
			59.7			
			Trap			
			60.7			
			60.7 Boring Depth			

ENG FORM 1836 MAR 71 PREVIOUS EDITIONS ARE OBSOLETE. PROJECT HOLE NO.

Hole No. WES-2-17C-88

DRILLING LOG	DIVISION	INSTALLATION	SHEET OF SHEETS

1. PROJECT
2. LOCATION (Coordinates or Station)
3. DRILLING AGENCY
4. HOLE NO. (As shown on drawing title and file number)
5. NAME OF DRILLER
6. DIRECTION OF HOLE ☐ VERTICAL ☐ INCLINED _____ DEG. FROM VERT.
7. THICKNESS OF OVERBURDEN
8. DEPTH DRILLED INTO ROCK
9. TOTAL DEPTH OF HOLE
10. SIZE AND TYPE OF BIT
11. DATUM FOR ELEVATION SHOWN (TBM or MSL)
12. MANUFACTURER'S DESIGNATION OF DRILL
13. TOTAL NO. OF OVER-BURDEN SAMPLES TAKEN | DISTURBED | UNDISTURBED
14. TOTAL NUMBER CORE BOXES
15. ELEVATION GROUND WATER
16. DATE HOLE | STARTED | COMPLETED
17. ELEVATION TOP OF HOLE
18. TOTAL CORE RECOVERY FOR BORING %
19. SIGNATURE OF INSPECTOR

ELEVATION a	DEPTH b	LEGEND c	CLASSIFICATION OF MATERIALS (Description) d	% CORE RECOVERY e	BOX OR SAMPLE NO. f	REMARKS (Drilling time, water loss, depth of weathering, etc., if significant) g
			Well No. WES-2-17CP3-88			Date well screen was set: 5/27/98
			+2.5			
			0.0 Ground surface			
			Grout mixture			Water level just Prior to setting Screen –
			5.0			
			Bentonite Pellets			
			7.0			PVC Screen + Riser
			Filter Pack			
			20.6			
			Well Screen			
			25.6			
			~~Trap~~ No trap			
			25.6			
			25.6 Boring Depth			

ENG FORM 1836. PREVIOUS EDITIONS ARE OBSOLETE. PROJECT | HOLE NO.

DRILLING LOG	DIVISION: US Navy	INSTALLATION: NWSC Crane Ind.	SHEET 1 OF 11 SHEETS

1. PROJECT: Hydrogeologic Studies, ALG
2. LOCATION (Coordinates or Station):
3. DRILLING AGENCY: WES
4. HOLE NO. (As shown on drawing title and file number):
5. NAME OF DRILLER: Dan Taylor
6. DIRECTION OF HOLE: ☑ VERTICAL ☐ INCLINED _____ DEG. FROM VERT.
7. THICKNESS OF OVERBURDEN: 5.4'
8. DEPTH DRILLED INTO ROCK:
9. TOTAL DEPTH OF HOLE: 10.1'
10. SIZE AND TYPE OF BIT: HQ wireline
11. DATUM FOR ELEVATION SHOWN (TBM or MSL): MSL
12. MANUFACTURER'S DESIGNATION OF DRILL: Failing 1500
13. TOTAL NO. OF OVER-BURDEN SAMPLES TAKEN: DISTURBED: UNDISTUR:
14. TOTAL NUMBER CORE BOXES:
15. ELEVATION GROUND WATER:
16. DATE HOLE: STARTED 6/2/88 COMPLETED 6/6/86
17. ELEVATION TOP OF HOLE:
18. TOTAL CORE RECOVERY FOR BORING %
19. SIGNATURE OF ~~INSPECTOR~~: Geologist Richard W. Hunt

ELEVATION a	DEPTH b	LEGEND c	CLASSIFICATION OF MATERIALS (Description) d	% CORE RECOVERY e	BOX OR SAMPLE NO. f	REMARKS (Drilling time, water loss, depth of weathering, etc., if significant) g
	0		Silty Clay, Br-yBr, soft - mod firm w/depth, moist (Residual Soil)			0.0-5.4 - Auger
	1					
	2					
	3					
	4					
	5					
	6		Sandstone, y tan, th bd, occ wea shale pts, fine grained, highly oxidized, hard.			5.4-10.1 - R.R.B.t
	7					
	8					
	9					
	10					

ENG FORM 1836 PROJECT

Hole No. WFC-2-191-06

DRILLING LOG	DIVISION	INSTALLATION	SHEET 2 OF 11 SHEETS

1. PROJECT	10. SIZE AND TYPE OF BIT
2. LOCATION (Coordinates or Station)	11. DATUM FOR ELEVATION SHOWN (TBM or MSL)
3. DRILLING AGENCY	12. MANUFACTURER'S DESIGNATION OF DRILL
4. HOLE NO. (As shown on drawing title and file number) 2-18C	13. TOTAL NO. OF OVER-BURDEN SAMPLES TAKEN — DISTURBED — UNDISTURBED
5. NAME OF DRILLER	14. TOTAL NUMBER CORE BOXES
6. DIRECTION OF HOLE ☐ VERTICAL ☐ INCLINED ____ DEG. FROM VERT.	15. ELEVATION GROUND WATER
7. THICKNESS OF OVERBURDEN	16. DATE HOLE — STARTED — COMPLETED
8. DEPTH DRILLED INTO ROCK	17. ELEVATION TOP OF HOLE
9. TOTAL DEPTH OF HOLE	18. TOTAL CORE RECOVERY FOR BORING %
	19. SIGNATURE OF INSPECTOR

ELEVATION a	DEPTH b	LEGEND c	CLASSIFICATION OF MATERIALS (Description) d	% CORE RECOVERY e	BOX OR SAMPLE NO. f	REMARKS (Drilling time, water loss, depth of weathering, etc., if significant) g
	10		Sandstone (cont.)	10.1 Run 1		Coring w/HQ wireline
	11	13				
		33		2.0 / 3.0		
		20				
	12	30 / 10		-1.0		
		0	Jts have lim stn + are mostly along bd.			
		10				
	13	10		13.1 Run 2		
		0				
		20				
	14	0				
		2				
		0				
	15					
		10				
	16	20		9.4 / 10.0		
		0				
		20				
	17	0		-0.6		
			Siltstone/claystone, ylsh brn + olive Gr in top zone to lGr, carbonaceous, occ SS zones oxidized	-0.4		
	18	2				
		25				
	19					
		10				
	20					

ENG FORM 1836 PREVIOUS EDITIONS ARE OBSOLETE PROJECT HOLE NO.

DRILLING LOG	DIVISION	INSTALLATION	SHEET 3 OF 11 SHEETS

1. PROJECT	10. SIZE AND TYPE OF BIT
2. LOCATION (Coordinates or Station)	11. DATUM FOR ELEVATION SHOWN (TBM or MSL)
3. DRILLING AGENCY	12. MANUFACTURER'S DESIGNATION OF DRILL
4. HOLE NO. (As shown on drawing title and file number) 2-18C	13. TOTAL NO. OF OVER-BURDEN SAMPLES TAKEN — DISTURBED — UNDISTURBED
5. NAME OF DRILLER	14. TOTAL NUMBER CORE BOXES
6. DIRECTION OF HOLE ☐ VERTICAL ☐ INCLINED ____ DEG. FROM VERT.	15. ELEVATION GROUND WATER
7. THICKNESS OF OVERBURDEN	16. DATE HOLE — STARTED — COMPLETED
8. DEPTH DRILLED INTO ROCK	17. ELEVATION TOP OF HOLE
9. TOTAL DEPTH OF HOLE	18. TOTAL CORE RECOVERY FOR BORING %
	19. SIGNATURE OF INSPECTOR

ELEVATION a	DEPTH b	LEGEND c	CLASSIFICATION OF MATERIALS (Description) d	% CORE RECOVERY e	BOX OR SAMPLE NO. f	REMARKS (Drilling time, water loss, depth of weathering, etc., if significant) g
	20		SS, y Br, + Gr, Conglomerate, carbon inclus.			
	21		swirled bd, soft rk 1-m Gr w/oxidized Br zones			
	22					
	23		mass, 1-m Gr, soft rk.	22.9 / 23.1 Run 3		Pull depth
	24					
	25		SS, lim crusted, conglo			
			swirled bd, lim crusting			
	26					
	27		SS, conglo, carbon inclus, lim crusting	10.2 / 10.3		
			mass, m Gr. carbon inclus	+0.3		
	28		lim (illed)			
			Gradational change			
			Clay shale, d olive Gr, th bd, uwn, lim stn along jts			
	29					
	30					

ENG FORM 1021 PROJECT

Hole No. WES-2-18C-54

DRILLING LOG	DIVISION	INSTALLATION	SHEET 4 OF 11 SHEETS

1. PROJECT	10. SIZE AND TYPE OF BIT
2. LOCATION (Coordinates or Station)	11. DATUM FOR ELEVATION SHOWN (TBM or MSL)
3. DRILLING AGENCY	12. MANUFACTURER'S DESIGNATION OF DRILL
4. HOLE NO. (As shown on drawing title and file number) 2-18C	13. TOTAL NO. OF OVER-BURDEN SAMPLES TAKEN — DISTURBED — UNDISTURBED
5. NAME OF DRILLER	14. TOTAL NUMBER CORE BOXES
6. DIRECTION OF HOLE ☐ VERTICAL ☐ INCLINED ____ DEG. FROM VERT.	15. ELEVATION GROUND WATER
7. THICKNESS OF OVERBURDEN	16. DATE HOLE — STARTED — COMPLETED
8. DEPTH DRILLED INTO ROCK	17. ELEVATION TOP OF HOLE
9. TOTAL DEPTH OF HOLE	18. TOTAL CORE RECOVERY FOR BORING %
	19. SIGNATURE OF INSPECTOR

ELEVATION a	DEPTH b	LEGEND c	CLASSIFICATION OF MATERIALS (Description) d	% CORE RECOVERY e	BOX OR SAMPLE NO. f	REMARKS (Drilling time, water loss, depth of weathering, etc., if significant) g
	30	50	Lim clay Shale (cont.)			Sl: Lim stn + tight
	31	50	Lim			
	32	10 10				
	33	1 60	Sandstone; yBr, th bd, f grained, highly oxidized, occ wea shale pts: hd. (Red-Br + fragmented in top 1-1½'.)	33.1 Run 4		
	34	0 45 45				
	35	0				
	36	0				
	37	0 100		9.3 10.0		
	38	0 29		-0.7		
	39	0 0				
	40	0				

ENG FORM ... PROJECT HOLE NO.

Hole No. WES-2-IR-A9

DRILLING LOG	DIVISION	INSTALLATION	SHEET 5 OF 11 SHEETS

1. PROJECT	10. SIZE AND TYPE OF BIT
2. LOCATION (Coordinates or Station)	11. DATUM FOR ELEVATION SHOWN (TBM or MSL)
3. DRILLING AGENCY	12. MANUFACTURER'S DESIGNATION OF DRILL
4. HOLE NO. (As shown on drawing title and file number) 2-184	13. TOTAL NO. OF OVER-BURDEN SAMPLES TAKEN — DISTURBED — UNDISTURBED
5. NAME OF DRILLER	14. TOTAL NUMBER CORE BOXES
6. DIRECTION OF HOLE ☐ VERTICAL ☐ INCLINED ____ DEG. FROM VERT.	15. ELEVATION GROUND WATER
7. THICKNESS OF OVERBURDEN	16. DATE HOLE — STARTED — COMPLETED
8. DEPTH DRILLED INTO ROCK	17. ELEVATION TOP OF HOLE
9. TOTAL DEPTH OF HOLE	18. TOTAL CORE RECOVERY FOR BORING %
	19. SIGNATURE OF INSPECTOR

ELEVATION a	DEPTH b	LEGEND c	CLASSIFICATION OF MATERIALS (Description) d	% CORE RECOVERY e	BOX OR SAMPLE NO. f	REMARKS (Drilling time, water loss, depth of weathering, etc., if significant) g
	40	5	SS (Cont.)			
		0				
	41	10				
		0				
		10				
	42	0				
		0				
		30				
	43	30	highly oxidized rusty Br.	43.1 / Run 5		
		0				
		85				
	44	0				
	45					
		5				
	46		closely spaced sh pts in bot 1½ ft.	10.0 / 10.0		
	47	0	Gradational Change			
	48		Sandstone, lGr, th bd, w/ wavy, silt shale pts spaced ¼" to 6" apart, f grained, hd.			
	49					
	50					

ENG FORM 1836 PROJECT HOLE NO.

Hole No. WES-7-112-22

DRILLING LOG	DIVISION	INSTALLATION	SHEET 6 OF 11 SHEETS

1. PROJECT	10. SIZE AND TYPE OF BIT
2. LOCATION (Coordinates or Station)	11. DATUM FOR ELEVATION SHOWN (TBM or MSL)
3. DRILLING AGENCY	12. MANUFACTURER'S DESIGNATION OF DRILL
4. HOLE NO. (As shown on drawing title and file number) 2-182	13. TOTAL NO. OF OVER-BURDEN SAMPLES TAKEN — DISTURBED — UNDISTURBED
5. NAME OF DRILLER	14. TOTAL NUMBER CORE BOXES
6. DIRECTION OF HOLE ☐ VERTICAL ☐ INCLINED ____ DEG. FROM VERT.	15. ELEVATION GROUND WATER
7. THICKNESS OF OVERBURDEN	16. DATE HOLE — STARTED — COMPLETED
8. DEPTH DRILLED INTO ROCK	17. ELEVATION TOP OF HOLE
9. TOTAL DEPTH OF HOLE	18. TOTAL CORE RECOVERY FOR BORING %
	19. SIGNATURE OF INSPECTOR

ELEVATION a	DEPTH b	LEGEND c	CLASSIFICATION OF MATERIALS (Description) d	% CORE RECOVERY e	BOX OR SAMPLE NO. f	REMARKS (Drilling time, water loss, depth of weathering, etc., if significant) g
	50		Sandstone (cont.)			
	51					
	52		Core breaks easily along shaley pts.			
	53			53.1 / Run 6		
	54					
	55					
	56					
	57			9.3 / 10.0		
	58			10.7		
	59					
	60					

ENG FORM 1836 PROJECT HOLE NO.

Hole No. WES-2-18C-88

DRILLING LOG	DIVISION	INSTALLATION	SHEET 7 OF 11 SHEETS

1. PROJECT	10. SIZE AND TYPE OF BIT
2. LOCATION (Coordinates or Station)	11. DATUM FOR ELEVATION SHOWN (TBM or MSL)
3. DRILLING AGENCY	12. MANUFACTURER'S DESIGNATION OF DRILL
4. HOLE NO. (As shown on drawing title and file number) 2-18C	13. TOTAL NO. OF OVER-BURDEN SAMPLES TAKEN — DISTURBED — UNDISTU
5. NAME OF DRILLER	14. TOTAL NUMBER CORE BOXES
6. DIRECTION OF HOLE ☐ VERTICAL ☐ INCLINED ____ DEG. FROM VERT.	15. ELEVATION GROUND WATER
7. THICKNESS OF OVERBURDEN	16. DATE HOLE — STARTED — COMPLETED
8. DEPTH DRILLED INTO ROCK	17. ELEVATION TOP OF HOLE
9. TOTAL DEPTH OF HOLE	18. TOTAL CORE RECOVERY FOR BORING %
	19. SIGNATURE OF INSPECTOR

ELEVATION a	DEPTH b	LEGEND c	CLASSIFICATION OF MATERIALS (Description) d	% CORE RECOVERY e	BOX OR SAMPLE NO. f	REMARKS (Drilling time, water loss, depth of weathering, etc., if significant) g
	60					
	61		SS grades to a fine granular LS(?) in bot 1-1½'.			
	62		Base of Mansfield Fm.			PENN 62.4' MISS.
			Hardinsburg fm Shale, Gn, mass. hd, crumbly	63.1 Run 7		
	63					
	64					
	65					
	66					
	67					6/3/88 Reamed hole to 6¾" dia and set 4" P.V.C. casing to 68.1'. Grouted in bot portion of casing.
	68			68.1 Run 8		
	69					6/7/88
	70			1.9/3.9 -2.0		— core ground away.

ENG FORM 1836 PROJECT

Hole No. WES-2-18C-85

DRILLING LOG

DIVISION	
INSTALLATION	
SHEET 8 OF 11 SHEETS	
1. PROJECT	
2. LOCATION (Coordinates or Station)	
3. DRILLING AGENCY	
4. HOLE NO. (As shown on drawing title and file number)	2-18C
5. NAME OF DRILLER	
6. DIRECTION OF HOLE ☐ VERTICAL ☐ INCLINED ____ DEG. FROM VERT.	
7. THICKNESS OF OVERBURDEN	
8. DEPTH DRILLED INTO ROCK	
9. TOTAL DEPTH OF HOLE	
10. SIZE AND TYPE OF BIT	
11. DATUM FOR ELEVATION SHOWN (TBM or MSL)	
12. MANUFACTURER'S DESIGNATION OF DRILL	
13. TOTAL NO. OF OVER-BURDEN SAMPLES TAKEN	DISTURBED / UNDISTURBED
14. TOTAL NUMBER CORE BOXES	
15. ELEVATION GROUND WATER	
16. DATE HOLE	STARTED / COMPLETED
17. ELEVATION TOP OF HOLE	
18. TOTAL CORE RECOVERY FOR BORING %	
19. SIGNATURE OF INSPECTOR	

ELEVATION a	DEPTH b	LEGEND c	CLASSIFICATION OF MATERIALS (Description) d	% CORE RECOVERY e	BOX OR SAMPLE NO. f	REMARKS (Drilling time, water loss, depth of weathering, etc., if significant) g
	70		Shale (cont.			
	71		Claystone, Gn + dbr Red, mottled, mass, hd, Fractured.			
	72			72.0 / Run 9		
	73					
	74					
	75		Shale dGr th bd Platy-flakey (Zone between 74.9 & 82.2 was ground away during drilling)			
	76			2.9 / 7.3		
	77			7.3		Core bl blocked at ~74.9' & ground lower core away.
	78					
	79					
	80					

ENG FORM 1836 PROJECT HOLE NO.

DRILLING LOG	DIVISION	INSTALLATION	SHEET 9 OF 11 SHEETS

1. PROJECT	10. SIZE AND TYPE OF BIT
2. LOCATION (Coordinates or Station)	11. DATUM FOR ELEVATION SHOWN (TBM or MSL)
3. DRILLING AGENCY	12. MANUFACTURER'S DESIGNATION OF DRILL
4. HOLE NO. (As shown on drawing title and file number) 2-18C	13. TOTAL NO. OF OVER-BURDEN SAMPLES TAKEN — DISTURBED — UNDISTURBED
5. NAME OF DRILLER	14. TOTAL NUMBER CORE BOXES
6. DIRECTION OF HOLE ☐ VERTICAL ☐ INCLINED ____ DEG. FROM VERT.	15. ELEVATION GROUND WATER
7. THICKNESS OF OVERBURDEN	16. DATE HOLE — STARTED — COMPLETED
8. DEPTH DRILLED INTO ROCK	17. ELEVATION TOP OF HOLE
9. TOTAL DEPTH OF HOLE	18. TOTAL CORE RECOVERY FOR BORING %
	19. SIGNATURE OF INSPECTOR

ELEVATION a	DEPTH b	LEGEND c	CLASSIFICATION OF MATERIALS (Description) d	% CORE RECOVERY e	BOX OR SAMPLE NO. f	REMARKS (Drilling time, water loss, depth of weathering, etc., if significant) g
	80		Shale (cont.)			
	81					
	82			82.2 / Run 10		
	83			1.1 / 1.2 (-0.1)		
				83.4 / Run 11		
	84					
	85					
	86					
				7.0 / 8.8		
	87		occ dgrBr lime/siltstone nodules in bot 3-4'			
	88			(1.8')		
	89					
	90					

ENG FORM 1836 PREVIOUS EDITIONS ARE OBSOLETE PROJECT HOLE NO.

Hole No. WES-2-18C-89

DRILLING LOG	DIVISION	INSTALLATION	SHEET 10 OF 11 SHEETS

1. PROJECT
2. LOCATION (Coordinates or Station)
3. DRILLING AGENCY
4. HOLE NO. (As shown on drawing title and file number): 2-18C
5. NAME OF DRILLER
6. DIRECTION OF HOLE: ☐ VERTICAL ☐ INCLINED _____ DEG. FROM VERT.
7. THICKNESS OF OVERBURDEN
8. DEPTH DRILLED INTO ROCK
9. TOTAL DEPTH OF HOLE
10. SIZE AND TYPE OF BIT
11. DATUM FOR ELEVATION SHOWN (TBM or MSL)
12. MANUFACTURER'S DESIGNATION OF DRILL
13. TOTAL NO. OF OVER-BURDEN SAMPLES TAKEN: DISTURBED / UNDISTURBED
14. TOTAL NUMBER CORE BOXES
15. ELEVATION GROUND WATER
16. DATE HOLE: STARTED / COMPLETED
17. ELEVATION TOP OF HOLE
18. TOTAL CORE RECOVERY FOR BORING %
19. SIGNATURE OF INSPECTOR

ELEVATION a	DEPTH b	LEGEND c	CLASSIFICATION OF MATERIALS (Description) d	% CORE RECOVERY e	BOX OR SAMPLE NO. f	REMARKS (Drilling time, water loss, depth of weathering, etc., if significant) g
	90					
	91	75	Base of Hardinsburg - 91.0' Top of Golconda/Haney Limestone, 1-mgrBx, m-c crystalline, fossiliferous, v hd, v dens.			
	92			92.2 Run 12		
	93		Shaley, thin bd Ls.			
	94	15				
	95	20		6.0/6.1		No good water Jts in G/H Ls
	96			-0.1		
	97					
	98	5	Base of Golconda/Haney Top of Indian springs	98.3 Run 13		
	99		Shale, blk, thin bd platey, carbonaceous, hard.	2.6/2.9		
	100			-0.3		

ENG FORM 1836 PREVIOUS EDITIONS ARE OBSOLETE PROJECT HOLE NO.

DRILLING LOG

DIVISION	
INSTALLATION	
SHEET	11 OF 11 SHEETS
1. PROJECT	
2. LOCATION (Coordinates or Station)	
3. DRILLING AGENCY	
4. HOLE NO. (As shown on drawing title and file number)	Z-18C
5. NAME OF DRILLER	
6. DIRECTION OF HOLE	☐ VERTICAL ☐ INCLINED _____ DEG. FROM VERT.
7. THICKNESS OF OVERBURDEN	
8. DEPTH DRILLED INTO ROCK	
9. TOTAL DEPTH OF HOLE	
10. SIZE AND TYPE OF BIT	
11. DATUM FOR ELEVATION SHOWN (TBM or MSL)	
12. MANUFACTURER'S DESIGNATION OF DRILL	
13. TOTAL NO. OF OVER-BURDEN SAMPLES TAKEN	DISTURBED / UNDISTUR
14. TOTAL NUMBER CORE BOXES	
15. ELEVATION GROUND WATER	
16. DATE HOLE	STARTED / COMPLETED
17. ELEVATION TOP OF HOLE	
18. TOTAL CORE RECOVERY FOR BORING	%
19. SIGNATURE OF INSPECTOR	

ELEVATION a	DEPTH b	LEGEND c	CLASSIFICATION OF MATERIALS (Description) d	% CORE RECOVERY e	BOX OR SAMPLE NO. f	REMARKS (Drilling time, water loss, depth of weathering, etc., if significant) g
	100					
	101			101.2		
			Bot Depth- 101.2'			
	102					

ENG FORM 1836 PROJECT HOLE NO.

DRILLING LOG

DIVISION	
INSTALLATION	
SHEET	OF SHEETS
1. PROJECT	
2. LOCATION (Coordinates or Station)	
3. DRILLING AGENCY	
4. HOLE NO. (As shown on drawing title and file number)	
5. NAME OF DRILLER	
6. DIRECTION OF HOLE	☐ VERTICAL ☐ INCLINED _____ DEG. FROM VERT.
7. THICKNESS OF OVERBURDEN	
8. DEPTH DRILLED INTO ROCK	
9. TOTAL DEPTH OF HOLE	
10. SIZE AND TYPE OF BIT	
11. DATUM FOR ELEVATION SHOWN (TBM or MSL)	
12. MANUFACTURER'S DESIGNATION OF DRILL	
13. TOTAL NO. OF OVER-BURDEN SAMPLES TAKEN	DISTURBED / UNDISTURBED
14. TOTAL NUMBER CORE BOXES	
15. ELEVATION GROUND WATER	
16. DATE HOLE	STARTED / COMPLETED
17. ELEVATION TOP OF HOLE	
18. TOTAL CORE RECOVERY FOR BORING	%
19. SIGNATURE OF INSPECTOR	

ELEVATION a	DEPTH b	LEGEND c	CLASSIFICATION OF MATERIALS (Description) d	% CORE RECOVERY e	BOX OR SAMPLE NO. f	REMARKS (Drilling time, water loss, depth of weathering, etc., if significant) g
			Well No: WES-2-18C-88			Date well screen was set: 6/6/88
			+2.5			
			0.0' Ground surface			
			Grout mixture			Water level just Prior to setting screen –
			75.0			
			Bentonite Pellets			
			80.0			PVC Screen + Riser
			Filter Pack			
			88.3			
			Well Screen			
			98.3			
			Trap			
			99.3			
			101.2 Boring Depth			

ENG FORM 1836 MAR 71 PREVIOUS EDITIONS ARE OBSOLETE. (TRANSLUCENT)

PROJECT | HOLE NO.

HOLE NO. WES-2-18C-88

DRILLING LOG

DIVISION	
INSTALLATION	
SHEET OF SHEETS	
1. PROJECT	
2. LOCATION (Coordinates or Station)	
3. DRILLING AGENCY	
4. HOLE NO. (As shown on drawing title and file number)	
5. NAME OF DRILLER	
6. DIRECTION OF HOLE ☐ VERTICAL ☐ INCLINED _____ DEG. FROM VERT.	
7. THICKNESS OF OVERBURDEN	
8. DEPTH DRILLED INTO ROCK	
9. TOTAL DEPTH OF HOLE	
10. SIZE AND TYPE OF BIT	
11. DATUM FOR ELEVATION SHOWN (TBM or MSL)	
12. MANUFACTURER'S DESIGNATION OF DRILL	
13. TOTAL NO. OF OVER-BURDEN SAMPLES TAKEN	DISTURBED / UNDIST
14. TOTAL NUMBER CORE BOXES	
15. ELEVATION GROUND WATER	
16. DATE HOLE	STARTED / COMPLETED
17. ELEVATION TOP OF HOLE	
18. TOTAL CORE RECOVERY FOR BORING %	
19. SIGNATURE OF INSPECTOR	

ELEVATION a	DEPTH b	LEGEND c	CLASSIFICATION OF MATERIALS (Description) d	% CORE RECOVERY e	BOX OR SAMPLE NO. f	REMARKS (Drilling time, water loss, depth of weathering, etc., if significant) g
			Well No.: WES-2-18C P2-88			Date well screen was set: 6/7/88
			+2.5			
			0.0' — Ground surface			
			Grout			
			5.0			Water level just Prior to setting Screen –
			~~Grout mixture~~ Sand			
			26.0			
			Bentonite Pellets			
			31.0			
						PVC Screen & Riser
			Filter Pack			
			52.4			
			Well Screen			
			62.4			
			Trap			
			63.4			
			63.4 Boring Depth			

ENG FORM 1836 MAR 71 PREVIOUS EDITIONS ARE OBSOLETE. PROJECT HOLE NO.

Hole No. WES-2-18CP3-88

DRILLING LOG	DIVISION	INSTALLATION	SHEET OF SHEETS
1. PROJECT		10. SIZE AND TYPE OF BIT	
2. LOCATION (Coordinates or Station)		11. DATUM FOR ELEVATION SHOWN (TBM or MSL)	
3. DRILLING AGENCY		12. MANUFACTURER'S DESIGNATION OF DRILL	
4. HOLE NO. (As shown on drawing title and file number)		13. TOTAL NO. OF OVER-BURDEN SAMPLES TAKEN	DISTURBED / UNDISTURBED
5. NAME OF DRILLER		14. TOTAL NUMBER CORE BOXES	
6. DIRECTION OF HOLE ☐ VERTICAL ☐ INCLINED ____ DEG. FROM VERT.		15. ELEVATION GROUND WATER	
		16. DATE HOLE	STARTED / COMPLETED
7. THICKNESS OF OVERBURDEN		17. ELEVATION TOP OF HOLE	
8. DEPTH DRILLED INTO ROCK		18. TOTAL CORE RECOVERY FOR BORING %	
9. TOTAL DEPTH OF HOLE		19. SIGNATURE OF INSPECTOR	

ELEVATION a	DEPTH b	LEGEND c	CLASSIFICATION OF MATERIALS (Description) d	% CORE RECOVERY e	BOX OR SAMPLE NO. f	REMARKS (Drilling time, water loss, depth of weathering, etc., if significant) g
			Well No. WES-2-18CP3-88			Date well screen was set: 6/7/88
			+2.5			
			0.0' Ground surface			
			Grout mixture			Water level just Prior to setting Screen –
			4.0			
			Bentonite Pellets			
			5.0			PVC Screen + Riser
			Filter Pack			
			13.0			
			Well Screen			
			18.0			
			Trap			
			18.5			
			18.5 Boring Depth			

ENG FORM 1836 MAR 71 PREVIOUS EDITIONS ARE OBSOLETE. PROJECT HOLE NO.

Hole No. WI-S-2-19C-B3

DRILLING LOG	DIVISION U.S Navy	INSTALLATION Grove Ind N WSC	SHEET 1 OF 10 SHEETS

1. PROJECT: Hydrogeologic Studies, DBG.
2. LOCATION (Coordinates or Station): V
3. DRILLING AGENCY: WES
4. HOLE NO. (As shown on drawing title and file number): 2-19C
5. NAME OF DRILLER: Dan Taylor
6. DIRECTION OF HOLE: [X] VERTICAL [ ] INCLINED ____ DEG. FROM VERT.
7. THICKNESS OF OVERBURDEN: 4.7'
8. DEPTH DRILLED INTO ROCK:
9. TOTAL DEPTH OF HOLE: 93.0'
10. SIZE AND TYPE OF BIT: HQ Wireline
11. DATUM FOR ELEVATION SHOWN (TBM or MSL):
12. MANUFACTURER'S DESIGNATION OF DRILL: Failing 1500
13. TOTAL NO. OF OVER-BURDEN SAMPLES TAKEN: DISTURBED ____ UNDISTUR ____
14. TOTAL NUMBER CORE BOXES:
15. ELEVATION GROUND WATER:
16. DATE HOLE: STARTED 6/8/88 COMPLETED 6/14/88
17. ELEVATION TOP OF HOLE: 730.85
18. TOTAL CORE RECOVERY FOR BORING: %
19. SIGNATURE OF ~~INSPECTOR~~ Geologist: Richard W. Hunt

ELEVATION a.	DEPTH b.	LEGEND c.	CLASSIFICATION OF MATERIALS (Description) d.	% CORE RECOVERY e.	BOX OR SAMPLE NO. f.	REMARKS (Drilling time, water loss, depth of weathering, etc., if significant) g.
	0		Silty clay, y tan-Br, soft - mod soft, v moist. (Residual Soil)			0.0 - 4.7 - Auger
	1					
	2					
	3					
	4					Set surface casing (PVC) to 4.7'.
			Top of Rock - 4.7'	4.7		
	5		Sandstone Buff-y Tan, vf-f grained, th bd (cross bd), occ th clay lens (wea sh), highly oxidized, occ Lim castings.			4.7 - 10.0 - R.R. Bit
	6					
	7		numerous bedding Jts			
	8					
	9					
	10			10.0		

ENG FORM 1836 PROJECT

Hole No. WES-2-19C-BS

DRILLING LOG	DIVISION	INSTALLATION	SHEET 2 OF 10 SHEETS

1. PROJECT	10. SIZE AND TYPE OF BIT
2. LOCATION (Coordinates or Station)	11. DATUM FOR ELEVATION SHOWN (TBM or MSL)
3. DRILLING AGENCY	12. MANUFACTURER'S DESIGNATION OF DRILL
4. HOLE NO. (As shown on drawing title and file number) 2-19C	13. TOTAL NO. OF OVER-BURDEN SAMPLES TAKEN — DISTURBED — UNDISTURBED
5. NAME OF DRILLER	14. TOTAL NUMBER CORE BOXES
6. DIRECTION OF HOLE ☐ VERTICAL ☐ INCLINED _____ DEG. FROM VERT.	15. ELEVATION GROUND WATER
	16. DATE HOLE — STARTED — COMPLETED
7. THICKNESS OF OVERBURDEN	17. ELEVATION TOP OF HOLE
8. DEPTH DRILLED INTO ROCK	18. TOTAL CORE RECOVERY FOR BORING %
9. TOTAL DEPTH OF HOLE	19. SIGNATURE OF INSPECTOR

ELEVATION a	DEPTH b	LEGEND c	CLASSIFICATION OF MATERIALS (Description) d	% CORE RECOVERY e	BOX OR SAMPLE NO. f	REMARKS (Drilling time, water loss, depth of weathering, etc., if significant) g
	10		Sandstone (cont.)	Run 1		10.0' - Started Coring w/HQ wireline.
	11					
	12					
	13					
	14		conglomeritic, lightly oxidized	10.3/10.4 -0.1		
	15					
	16		Siltstone, sandy Buff-Tan, oxidized mod soft rk, mass			Losing ~ 20-25% of drill water.
	17					
	18		Rusty Br, Lim nastings, sdy			
	19					
	20					

ENG FORM 1836 PROJECT

Hole No. WES-2-193-M

DRILLING LOG	DIVISION	INSTALLATION	SHEET 3 OF 10 SHEETS

1. PROJECT	10. SIZE AND TYPE OF BIT
2. LOCATION (Coordinates or Station)	11. DATUM FOR ELEVATION SHOWN (TBM or MSL)
3. DRILLING AGENCY	12. MANUFACTURER'S DESIGNATION OF DRILL
4. HOLE NO. (As shown on drawing title and file number) 2-193	13. TOTAL NO. OF OVER-BURDEN SAMPLES TAKEN — DISTURBED — UNDISTUR
5. NAME OF DRILLER	14. TOTAL NUMBER CORE BOXES
6. DIRECTION OF HOLE ☐ VERTICAL ☐ INCLINED ____ DEG. FROM VERT.	15. ELEVATION GROUND WATER
7. THICKNESS OF OVERBURDEN	16. DATE HOLE — STARTED — COMPLETED
8. DEPTH DRILLED INTO ROCK	17. ELEVATION TOP OF HOLE
9. TOTAL DEPTH OF HOLE	18. TOTAL CORE RECOVERY FOR BORING %
	19. SIGNATURE OF INSPECTOR

ELEVATION a	DEPTH b	LEGEND c	CLASSIFICATION OF MATERIALS (Description) d	% CORE RECOVERY e	BOX OR SAMPLE NO. f	REMARKS (Drilling time, water loss, depth of weathering, etc., if significant) g
	20		siltstone (cont.)	20.4 Run 2		
		0				
	21	5				
	22	10				
	23	10				
	24	0				
	25	10	Clay Shale olive Gr + Buff, th bd, oxidation along jts, highly wea, soft rk.	8.5 / 10.3		
	26	20		1.8		
	27					
	28	15				
	29		Sandstone + Clay? (core loss in this zone) highly oxidized, fragmented (Probable wea Conglomerate)			small amount of caving during drilling between 28.4 & 32.5
	30					

ENG FORM 1836 PROJECT

Hole No. WES-2-19C-8

DRILLING LOG	DIVISION	INSTALLATION	SHEET 1 OF 10 SHEETS

1. PROJECT	10. SIZE AND TYPE OF BIT
2. LOCATION (Coordinates or Station)	11. DATUM FOR ELEVATION SHOWN (TBM or MSL)
3. DRILLING AGENCY	12. MANUFACTURER'S DESIGNATION OF DRILL
4. HOLE NO. (As shown on drawing title and file number) 2-19C	13. TOTAL NO. OF OVER-BURDEN SAMPLES TAKEN — DISTURBED — UNDISTURBED
5. NAME OF DRILLER	14. TOTAL NUMBER CORE BOXES
6. DIRECTION OF HOLE ☐ VERTICAL ☐ INCLINED ____ DEG. FROM VERT.	15. ELEVATION GROUND WATER
7. THICKNESS OF OVERBURDEN	16. DATE HOLE — STARTED — COMPLETED
8. DEPTH DRILLED INTO ROCK	17. ELEVATION TOP OF HOLE
9. TOTAL DEPTH OF HOLE	18. TOTAL CORE RECOVERY FOR BORING %
	19. SIGNATURE OF INSPECTOR

ELEVATION a	DEPTH b	LEGEND c	CLASSIFICATION OF MATERIALS (Description) d	% CORE RECOVERY e	BOX OR SAMPLE NO. f	REMARKS (Drilling time, water loss, depth of weathering, etc., if significant) g
	30					
				30.7 Run 3		
	31					
	32		Bot ft grades into th bd ss below			
	33		Sandstone, + Shale laminated l+d Gr bd, hd			
	34					
	35		Sandstone, y Tan, th bd-mass, f grained, occ clay lens (wea sh), (clay lens decrease w/depth), oxidized, hd	8.9/10.0		
	36			1.1		still Losing ~20% of drill water
	37		Jts glaze bedding, ~ hor.			
	38					
	39					
	40					

ENG FORM 1836 PROJECT

Hole No. WFS-2-19C-65

DRILLING LOG	DIVISION	INSTALLATION	SHEET 5 OF 10 SHEETS

1. PROJECT	10. SIZE AND TYPE OF BIT
2. LOCATION (Coordinates or Station)	11. DATUM FOR ELEVATION SHOWN (TBM or MSL)
3. DRILLING AGENCY	12. MANUFACTURER'S DESIGNATION OF DRILL
4. HOLE NO. (As shown on drawing title and file number) 2-19C	13. TOTAL NO. OF OVER-BURDEN SAMPLES TAKEN — DISTURBED — UNDISTU
5. NAME OF DRILLER	14. TOTAL NUMBER CORE BOXES
6. DIRECTION OF HOLE ☐ VERTICAL ☐ INCLINED ____ DEG. FROM VERT.	15. ELEVATION GROUND WATER
7. THICKNESS OF OVERBURDEN	16. DATE HOLE — STARTED — COMPLETED
8. DEPTH DRILLED INTO ROCK	17. ELEVATION TOP OF HOLE
9. TOTAL DEPTH OF HOLE	18. TOTAL CORE RECOVERY FOR BORING %
	19. SIGNATURE OF INSPECTOR

ELEVATION a	DEPTH b	LEGEND c	CLASSIFICATION OF MATERIALS (Description) d	% CORE RECOVERY e	BOX OR SAMPLE NO. f	REMARKS (Drilling time, water loss, depth of weathering, etc., if significant) g
	40		SS (cont.)			
				40.7 / Run 4		
	41					
	42					
			Gradational change			
	43		Sandstone, y ton-Buff, w/ wavey sh pts spaced 1/4 to 2" apart, f grained,	4.7 / 4.7		
	44		alter oxidized + lGr unoxidized zones to a depth of 49'; unoxidized + Gr below 49'.			
	45		Breaks easily along sh pts, hd	45.4 / Run 5		
	46					
	47					
	48			8.0 / 8.0		
	49					
	50					

ENG FORM 1836 PREVIOUS EDITIONS PROJECT

Hole No. WES-2-19C-5

DRILLING LOG	DIVISION	INSTALLATION	SHEET 6 OF 10 SHEETS

1. PROJECT
2. LOCATION (Coordinates or Station)
3. DRILLING AGENCY
4. HOLE NO. (As shown on drawing title and file number) 2-19C
5. NAME OF DRILLER
6. DIRECTION OF HOLE ☐ VERTICAL ☐ INCLINED _____ DEG. FROM VERT.
7. THICKNESS OF OVERBURDEN
8. DEPTH DRILLED INTO ROCK
9. TOTAL DEPTH OF HOLE
10. SIZE AND TYPE OF BIT
11. DATUM FOR ELEVATION SHOWN (TBM or MSL)
12. MANUFACTURER'S DESIGNATION OF DRILL
13. TOTAL NO. OF OVER-BURDEN SAMPLES TAKEN | DISTURBED | UNDISTURBED
14. TOTAL NUMBER CORE BOXES
15. ELEVATION GROUND WATER
16. DATE HOLE | STARTED | COMPLETED
17. ELEVATION TOP OF HOLE
18. TOTAL CORE RECOVERY FOR BORING %
19. SIGNATURE OF INSPECTOR

ELEVATION a	DEPTH b	LEGEND c	CLASSIFICATION OF MATERIALS (Description) d	% CORE RECOVERY e	BOX OR SAMPLE NO. f	REMARKS (Drilling time, water loss, depth of weathering, etc., if significant) g
	50		SS (cont.)			
	51					
	52					
	53			53.4 / Run 6		
	54			2.2 / 4.2		
	55		Bot ft grades to Blk sh w/ 1 Gr SS lens.			
			(Base of Mansfield fm) (Hardinsburg fm)	55.6 Run 7		PENN, 55.6' MISS
	56		Shale, Gn, mass, soft-mod hd, crumbly.			
	57			2.8 / 3.8		
	58			-1.0		Reamed hole & set 4" PVC casing to 59.4'. Grouted bot zone of casing.
	59			59.4 Run 8		6/14/80.
	60					

ENG FORM 1836 PREVIOUS EDITIONS ARE OBSOLETE PROJECT HOLE NO.

DRILLING LOG	DIVISION	INSTALLATION	SHEET 7 OF 10 SHEETS

1. PROJECT	10. SIZE AND TYPE OF BIT
2. LOCATION (Coordinates or Station)	11. DATUM FOR ELEVATION SHOWN (TBM or MSL)
3. DRILLING AGENCY	12. MANUFACTURER'S DESIGNATION OF DRILL
4. HOLE NO. (As shown on drawing title and file number) 2-19C	13. TOTAL NO. OF OVER-BURDEN SAMPLES TAKEN — DISTURBED — UNDISTURBED
5. NAME OF DRILLER	14. TOTAL NUMBER CORE BOXES
6. DIRECTION OF HOLE ☐ VERTICAL ☐ INCLINED _____ DEG. FROM VERT.	15. ELEVATION GROUND WATER
7. THICKNESS OF OVERBURDEN	16. DATE HOLE — STARTED — COMPLETED
8. DEPTH DRILLED INTO ROCK	17. ELEVATION TOP OF HOLE
9. TOTAL DEPTH OF HOLE	18. TOTAL CORE RECOVERY FOR BORING %
	19. SIGNATURE OF INSPECTOR

ELEVATION a	DEPTH b	LEGEND c	CLASSIFICATION OF MATERIALS (Description) d	% CORE RECOVERY e	BOX OR SAMPLE NO. f	REMARKS (Drilling time, water loss, depth of weathering, etc., if significant) g
	60		Shale (cont.)			Got back all water return
	61			0.8 / 4.8		Ground core away during drilling.
				-4.0'		
	62					
	63			63.2 / Run 9		
	64			1.8 / 2.4		
				-0.6		
	65		claystone Gn + dbr Red, mass, hd blocky fracturing (mottled)	65.6 / Run 10		
	66					
	67					
				3.9 / 7.6		Ground core away during drilling
	68					
				-3.7'		
	69					
	71					

ENG FORM 1836 PROJECT

Hole No. WFS-2-19C-65

DRILLING LOG	DIVISION	INSTALLATION	SHEET 8 OF 10 SHEETS

1. PROJECT	10. SIZE AND TYPE OF BIT
2. LOCATION (Coordinates or Station)	11. DATUM FOR ELEVATION SHOWN (TBM or MSL)
3. DRILLING AGENCY	12. MANUFACTURER'S DESIGNATION OF DRILL
4. HOLE NO. (As shown on drawing title and file number) 2-19C	13. TOTAL NO. OF OVER-BURDEN SAMPLES TAKEN: DISTURBED / UNDISTURBED
5. NAME OF DRILLER	14. TOTAL NUMBER CORE BOXES
6. DIRECTION OF HOLE ☐ VERTICAL ☐ INCLINED ____ DEG. FROM VERT.	15. ELEVATION GROUND WATER
7. THICKNESS OF OVERBURDEN	16. DATE HOLE: STARTED / COMPLETED
8. DEPTH DRILLED INTO ROCK	17. ELEVATION TOP OF HOLE
9. TOTAL DEPTH OF HOLE	18. TOTAL CORE RECOVERY FOR BORING %
	19. SIGNATURE OF INSPECTOR

ELEVATION a	DEPTH b	LEGEND c	CLASSIFICATION OF MATERIALS (Description) d	% CORE RECOVERY e	BOX OR SAMPLE NO. f	REMARKS (Drilling time, water loss, depth of weathering, etc., if significant) g
	70		Claystone (cont.)			
	71					
	72					
	73			73.2		
			Shale, dGr, th bd, platey-flakey, hd.	Run 11		
	74					
	75					
	76			9.5 / 10.0		
	77					
	78			>0.5		
		10	(Base of Hardinsburg - 78.7')			
	79	1.0	(Top of Golconda / Haney)			
			Limestone, f-m grBr, m-c crystaline, fossiliferous, v hd, v dens.			
	80					

ENG FORM 1836 PREVIOUS EDITIONS ARE OBSOLETE PROJECT HOLE NO.

DRILLING LOG	DIVISION	INSTALLATION	SHEET 9 OF 10 SHEETS

1. PROJECT	10. SIZE AND TYPE OF BIT
2. LOCATION (Coordinates or Station)	11. DATUM FOR ELEVATION SHOWN (TBM or MSL)
3. DRILLING AGENCY	12. MANUFACTURER'S DESIGNATION OF DRILL
4. HOLE NO. (As shown on drawing title and file number) 2-19C	13. TOTAL NO. OF OVER-BURDEN SAMPLES TAKEN — DISTURBED — UNDISTURBED
5. NAME OF DRILLER	14. TOTAL NUMBER CORE BOXES
6. DIRECTION OF HOLE ☐ VERTICAL ☐ INCLINED ____ DEG. FROM VERT.	15. ELEVATION GROUND WATER
7. THICKNESS OF OVERBURDEN	16. DATE HOLE — STARTED — COMPLETED
8. DEPTH DRILLED INTO ROCK	17. ELEVATION TOP OF HOLE
9. TOTAL DEPTH OF HOLE	18. TOTAL CORE RECOVERY FOR BORING %
	19. SIGNATURE OF INSPECTOR

ELEVATION a	DEPTH b	LEGEND c	CLASSIFICATION OF MATERIALS (Description) d	% CORE RECOVERY e	BOX OR SAMPLE NO. f	REMARKS (Drilling time, water loss, depth of weathering, etc., if significant) g
	80		Ls (cont.)			
	81					
	82			82.7		Pull depth
	83			83.2		
				Run 12		
	84	10 79 30 70 20				
	85		Shale, blk, thbd			
	86		Ls			
	87		Shale, blk, thbd	10.3 / 9.8		
	88	0 0		+0.5		
	89	0 0				
	90					

ENG FORM 1073 PROJECT

Hole No. 11FS-2-RC-98

DRILLING LOG	DIVISION	INSTALLATION	SHEET 10 OF 18 SHEETS

1. PROJECT
2. LOCATION (Coordinates or Station)
3. DRILLING AGENCY
4. HOLE NO. (As shown on drawing title and file number) 2-RC
5. NAME OF DRILLER
6. DIRECTION OF HOLE ☐ VERTICAL ☐ INCLINED _____ DEG. FROM VERT.
7. THICKNESS OF OVERBURDEN
8. DEPTH DRILLED INTO ROCK
9. TOTAL DEPTH OF HOLE
10. SIZE AND TYPE OF BIT
11. DATUM FOR ELEVATION SHOWN (TBM or MSL)
12. MANUFACTURER'S DESIGNATION OF DRILL
13. TOTAL NO. OF OVER-BURDEN SAMPLES TAKEN | DISTURBED | UNDISTURBED
14. TOTAL NUMBER CORE BOXES
15. ELEVATION GROUND WATER
16. DATE HOLE | STARTED | COMPLETED
17. ELEVATION TOP OF HOLE
18. TOTAL CORE RECOVERY FOR BORING %
19. SIGNATURE OF INSPECTOR

ELEVATION a	DEPTH b	LEGEND c	CLASSIFICATION OF MATERIALS (Description) d	% CORE RECOVERY e	BOX OR SAMPLE NO. f	REMARKS (Drilling time, water loss, depth of weathering, etc., if significant) g
	90		Base of Gibsonda/Haney - 90.2			
			Top of Indian Springs			
			Shale, Blk, thin bd, carbonaceous, platy, hard, occ. fossils			
	91					
	92					
	93			93.0		
			Bot depth - 93.0'			

ENG FORM 1836 PROJECT

DRILLING LOG	DIVISION	INSTALLATION	SHEET OF SHEETS

1. PROJECT
2. LOCATION (Coordinates or Station)
3. DRILLING AGENCY
4. HOLE NO. (As shown on drawing title and file number)
5. NAME OF DRILLER
6. DIRECTION OF HOLE ☐ VERTICAL ☐ INCLINED _____ DEG. FROM VERT.
7. THICKNESS OF OVERBURDEN
8. DEPTH DRILLED INTO ROCK
9. TOTAL DEPTH OF HOLE
10. SIZE AND TYPE OF BIT
11. DATUM FOR ELEVATION SHOWN (TBM or MSL)
12. MANUFACTURER'S DESIGNATION OF DRILL
13. TOTAL NO. OF OVER-BURDEN SAMPLES TAKEN | DISTURBED | UNDISTURBED
14. TOTAL NUMBER CORE BOXES
15. ELEVATION GROUND WATER
16. DATE HOLE | STARTED | COMPLETED
17. ELEVATION TOP OF HOLE
18. TOTAL CORE RECOVERY FOR BORING %
19. SIGNATURE OF INSPECTOR

ELEVATION a	DEPTH b	LEGEND c	CLASSIFICATION OF MATERIALS (Description) d	% CORE RECOVERY e	BOX OR SAMPLE NO. f	REMARKS (Drilling time, water loss, depth of weathering, etc., if significant) g
			Well No. WES-2-19C-88.			Date well screen was set: 6/14/88
733.35			+2.5 733.35			
			0.0' Ground surface 730.85			
			Grout mixture			Water level just Prior to setting screen –
			72.0			
			Bentonite Pellets			
			75.0			PVC screen + Riser
			Filter Pack			
			80.2			
			Well Screen			
			90.2			
			Trap			
			91.2			
			93.0' Boring Depth			

ENG FORM 1836 PREVIOUS EDITIONS ARE OBSOLETE | PROJECT | HOLE NO.

Hole No. WES-2-15C-89

DRILLING LOG	DIVISION	INSTALLATION	SHEET OF SHEETS

1. PROJECT	10. SIZE AND TYPE OF BIT
2. LOCATION (Coordinates or Station)	11. DATUM FOR ELEVATION SHOWN (TBM or MSL)
3. DRILLING AGENCY	12. MANUFACTURER'S DESIGNATION OF DRILL
4. HOLE NO. (As shown on drawing title and file number)	13. TOTAL NO. OF OVER-BURDEN SAMPLES TAKEN — DISTURBED — UNDISTURBED
5. NAME OF DRILLER	14. TOTAL NUMBER CORE BOXES
6. DIRECTION OF HOLE ☐ VERTICAL ☐ INCLINED ____ DEG. FROM VERT.	15. ELEVATION GROUND WATER
7. THICKNESS OF OVERBURDEN	16. DATE HOLE — STARTED — COMPLETED
8. DEPTH DRILLED INTO ROCK	17. ELEVATION TOP OF HOLE
9. TOTAL DEPTH OF HOLE	18. TOTAL CORE RECOVERY FOR BORING %
	19. SIGNATURE OF INSPECTOR

ELEVATION a	DEPTH b	LEGEND c	CLASSIFICATION OF MATERIALS (Description) d	% CORE RECOVERY e	BOX OR SAMPLE NO. f	REMARKS (Drilling time, water loss, depth of weathering, etc., if significant) g
			Well No. WES-2-15CP2-88			Date well screen was set: 6/15/88
733.28			+2.5			
			0.0' Ground surface			
			Grout			
			4.0			Water level just Prior to setting screen –
			~~Grout mixture~~			
			Sand			
			20.0			
			Bentonite Pellets			
			27.0			PVC Screen + Riser
			Filter Pack			
			45.6'			
			Well Screen			
			55.6			
			Trap			
			56.6			
			56.6' Boring Depth			

ENG FORM 1836 PREVIOUS EDITIONS ARE OBSOLETE. PROJECT HOLE NO.

DRILLING LOG	DIVISION	INSTALLATION	SHEET OF SHEETS

1. PROJECT	10. SIZE AND TYPE OF BIT
2. LOCATION (Coordinates or Station)	11. DATUM FOR ELEVATION SHOWN (TBM or MSL)
3. DRILLING AGENCY	12. MANUFACTURER'S DESIGNATION OF DRILL
4. HOLE NO. (As shown on drawing title and file number)	13. TOTAL NO. OF OVER-BURDEN SAMPLES TAKEN — DISTURBED — UNDISTURBED
5. NAME OF DRILLER	14. TOTAL NUMBER CORE BOXES
6. DIRECTION OF HOLE ☐ VERTICAL ☐ INCLINED ____ DEG. FROM VERT.	15. ELEVATION GROUND WATER
7. THICKNESS OF OVERBURDEN	16. DATE HOLE — STARTED — COMPLETED
8. DEPTH DRILLED INTO ROCK	17. ELEVATION TOP OF HOLE
9. TOTAL DEPTH OF HOLE	18. TOTAL CORE RECOVERY FOR BORING %
	19. SIGNATURE OF INSPECTOR

ELEVATION a	DEPTH b	LEGEND c	CLASSIFICATION OF MATERIALS (Description) d	% CORE RECOVERY e	BOX OR SAMPLE NO. f	REMARKS (Drilling time, water loss, depth of weathering, etc., if significant) g
			Well No: WES-2-MCP3-88			Date well screen was set: 6/16/88
733.63			+2.5			
			0.0' Ground surface			
			Grout mixture			Water level just Prior to setting screen –
			4.0			
			Bentonite Pellets			
			5.0			PVC Screen + Riser
			Filter Pack			
			10.7			
			Well Screen			
			15.7			
			Trap			
			16.7			
			16.7 Boring Depth			

ENG FORM 1836 MAR 71 PREVIOUS EDITIONS ARE OBSOLETE. PROJECT HOLE NO.

Hole No. WFS-2-20C-5

DRILLING LOG	DIVISION US Navy	INSTALLATION NWSC Grand Ind.	SHEET 1 OF 15 SHEETS

1. PROJECT: Hydrogeologic Studies, OBIS
2. LOCATION (Coordinates or Station):
3. DRILLING AGENCY: WFS
4. HOLE NO. (As shown on drawing title and file number): 2-20C
5. NAME OF DRILLER: Dan Taylor
6. DIRECTION OF HOLE: ☑ VERTICAL ☐ INCLINED _____ DEG. FROM VERT.
7. THICKNESS OF OVERBURDEN: 8.0'
8. DEPTH DRILLED INTO ROCK:
9. TOTAL DEPTH OF HOLE: 145.7'
10. SIZE AND TYPE OF BIT: H.Q. wireline
11. DATUM FOR ELEVATION SHOWN (TBM or MSL): MSL
12. MANUFACTURER'S DESIGNATION OF DRILL: Failing 1500
13. TOTAL NO. OF OVER-BURDEN SAMPLES TAKEN: DISTURBED: UNDISTURBED:
14. TOTAL NUMBER CORE BOXES:
15. ELEVATION GROUND WATER:
16. DATE HOLE: STARTED 6/16/88 COMPLETED 6/21/88
17. ELEVATION TOP OF HOLE: 712.56
18. TOTAL CORE RECOVERY FOR BORING: %
19. SIGNATURE OF ~~INSPECTOR~~ Geologist: Richard W. Hunt

ELEVATION a	DEPTH b	LEGEND c	CLASSIFICATION OF MATERIALS (Description) d	% CORE RECOVERY e	BOX OR SAMPLE NO. f	REMARKS (Drilling time, water loss, depth of weathering, etc., if significant) g
	0		Silty clay, y tan (Residual Soil)			0.0 to 17.1 - Auger
	1					
	2					
	3					
	4					
	5					
	6					
	7					
	8		Clayshale y tan Br (wea shale)			
	9					
	10					

ENG FORM 1836 PREVIOUS EDITIONS ... PROJECT HOLE NO.

Hole No. WES-2-20C-88

DRILLING LOG	DIVISION	INSTALLATION	SHEET 2 OF 15 SHEETS

1. PROJECT	10. SIZE AND TYPE OF BIT
2. LOCATION (Coordinates or Station)	11. DATUM FOR ELEVATION SHOWN (TBM or MSL)
3. DRILLING AGENCY	12. MANUFACTURER'S DESIGNATION OF DRILL
4. HOLE NO. (As shown on drawing title and file number) 2-20C	13. TOTAL NO. OF OVER-BURDEN SAMPLES TAKEN — DISTURBED — UNDISTUR
5. NAME OF DRILLER	14. TOTAL NUMBER CORE BOXES
6. DIRECTION OF HOLE ☐ VERTICAL ☐ INCLINED ____ DEG. FROM VERT.	15. ELEVATION GROUND WATER
7. THICKNESS OF OVERBURDEN	16. DATE HOLE — STARTED — COMPLETED
8. DEPTH DRILLED INTO ROCK	17. ELEVATION TOP OF HOLE
9. TOTAL DEPTH OF HOLE	18. TOTAL CORE RECOVERY FOR BORING %
	19. SIGNATURE OF INSPECTOR

ELEVATION a	DEPTH b	LEGEND c	CLASSIFICATION OF MATERIALS (Description) d	% CORE RECOVERY e	BOX OR SAMPLE NO. f	REMARKS (Drilling time, water loss, depth of weathering, etc., if significant) g
	10		Clayshale (cont.)			
	11					
	12					
	13		Shale, dGr-dlk, thbd, platy, carbonaceous (12.5-20.0')			
	14		Hor. Bedding			
	15					
	16					
	17			17.1		
						Started Coring w/ HQ Wireline
	18					
	19			6.4/6.6 -0.2		
	20					

ENG FORM 1836

Hole No. WES-2-20C-68

DRILLING LOG	DIVISION	INSTALLATION	SHEET 2 OF 15 SHEETS

1. PROJECT	10. SIZE AND TYPE OF BIT
2. LOCATION (Coordinates or Station)	11. DATUM FOR ELEVATION SHOWN (TBM or MSL)
3. DRILLING AGENCY	12. MANUFACTURER'S DESIGNATION OF DRILL
4. HOLE NO. (As shown on drawing title and file number) 2-20C	13. TOTAL NO. OF OVER-BURDEN SAMPLES TAKEN — DISTURBED — UNDISTURBED
5. NAME OF DRILLER	14. TOTAL NUMBER CORE BOXES
6. DIRECTION OF HOLE ☐ VERTICAL ☐ INCLINED ____ DEG. FROM VERT.	15. ELEVATION GROUND WATER
7. THICKNESS OF OVERBURDEN	16. DATE HOLE — STARTED — COMPLETED
8. DEPTH DRILLED INTO ROCK	17. ELEVATION TOP OF HOLE
9. TOTAL DEPTH OF HOLE	18. TOTAL CORE RECOVERY FOR BORING %
	19. SIGNATURE OF INSPECTOR

ELEVATION a	DEPTH b	LEGEND c	CLASSIFICATION OF MATERIALS (Description) d	% CORE RECOVERY e	BOX OR SAMPLE NO. f	REMARKS (Drilling time, water loss, depth of weathering, etc., if significant) g
	20		SS/slst, Gr, hd			
	21		Sandstone, conglomeritic highly oxidized w/ 1/in crusting			
	22					
	23		Shaly sandstone, 1-d Gr, th bd w/ Blk sh pts, burrowed?, oil stain seeping from pores (oxid)	23.6 / 23.7		Pull depth
	24					
	25					
	26					
	27			10.1 / 10.0		
	28		Gradational — Predominately 1 Gr SS lens w/ Blk sh pts, 1 grained, burrowed(?) ~ hor bd, (no oil stain)	10.1		
	29					
	30					

ENG FORM 1836 PROJECT HOLE NO.

DRILLING LOG	DIVISION	INSTALLATION	SHEET 1 OF 15 SHEETS

1. PROJECT	10. SIZE AND TYPE OF BIT
2. LOCATION (Coordinates or Station)	11. DATUM FOR ELEVATION SHOWN (TBM or MSL)
3. DRILLING AGENCY	12. MANUFACTURER'S DESIGNATION OF DRILL
4. HOLE NO. (As shown on drawing title and file number) 2-20c	13. TOTAL NO. OF OVER-BURDEN SAMPLES TAKEN — DISTURBED — UNDISTURB
5. NAME OF DRILLER	14. TOTAL NUMBER CORE BOXES
6. DIRECTION OF HOLE ☐ VERTICAL ☐ INCLINED ____ DEG. FROM VERT.	15. ELEVATION GROUND WATER
7. THICKNESS OF OVERBURDEN	16. DATE HOLE — STARTED — COMPLETED
8. DEPTH DRILLED INTO ROCK	17. ELEVATION TOP OF HOLE
9. TOTAL DEPTH OF HOLE	18. TOTAL CORE RECOVERY FOR BORING %
	19. SIGNATURE OF INSPECTOR

ELEVATION a	DEPTH b	LEGEND c	CLASSIFICATION OF MATERIALS (Description) d	% CORE RECOVERY e	BOX OR SAMPLE NO. f	REMARKS (Drilling time, water loss, depth of weathering, etc., if significant) g
	30					
	31		Sandstone, lGr+Br, conglomeritic, th bd, highly oxidized			
	32					
	33		Sandstone, m Gr, th bd-mass, w/pce to num Blk carbonaceous sh pts + th lens, f-m grn, ~ hor bd, oil stain seeping from pores.	33.7 Run 3		
	34					
	35					
	36			6.5		
	37		Sandstone conglomerate m-d grBr, highly oxd	6.9		PENN
			Base of Mauch Chunk (Fm)	-0.4		37.7' MISS
	38		(Hardinsburg Fm) Claystone / silt-stone, m Gn, mass, hd			
	39					
	40					

ENG FORM 1836 PROJECT HOLE NO.

Hole No. 2-20C

DRILLING LOG	DIVISION	INSTALLATION	SHEET 5 OF 15 SHEETS

1. PROJECT	10. SIZE AND TYPE OF BIT
2. LOCATION (Coordinates or Station)	11. DATUM FOR ELEVATION SHOWN (TBM or MSL)
3. DRILLING AGENCY	12. MANUFACTURER'S DESIGNATION OF DRILL
4. HOLE NO. (As shown on drawing title and file number) 2-20C	13. TOTAL NO. OF OVER-BURDEN SAMPLES TAKEN — DISTURBED — UNDISTURBED
5. NAME OF DRILLER	14. TOTAL NUMBER CORE BOXES
6. DIRECTION OF HOLE ☐ VERTICAL ☐ INCLINED ____ DEG. FROM VERT.	15. ELEVATION GROUND WATER
7. THICKNESS OF OVERBURDEN	16. DATE HOLE — STARTED — COMPLETED
8. DEPTH DRILLED INTO ROCK	17. ELEVATION TOP OF HOLE
9. TOTAL DEPTH OF HOLE	18. TOTAL CORE RECOVERY FOR BORING %
	19. SIGNATURE OF INSPECTOR

ELEVATION a	DEPTH b	LEGEND c	CLASSIFICATION OF MATERIALS (Description) d	% CORE RECOVERY e	BOX OR SAMPLE NO. f	REMARKS (Drilling time, water loss, depth of weathering, etc., if significant) g
	40		(cont.)			set 6" PVC Casing to 40.6'
				40.6		
				Run 4		6/17/88
	41					
				2.0 / 2.9		
	42			-0.9		
	43		Shale, Blk, th bd. platey - flaky	43.5		
				Run 5		
	44					
	45					
				4.8 / 5.6		
	46			-0.8		
	47					
	48					
	49			49.1		
				Run 6		
	50					

ENG FORM 1836 PROJECT

HOLE NO. 2-20C

DRILLING LOG	DIVISION	INSTALLATION	SHEET 6 OF 15 SHEETS

1. PROJECT	10. SIZE AND TYPE OF BIT
2. LOCATION (Coordinates or Station)	11. DATUM FOR ELEVATION SHOWN (TBM or MSL)
3. DRILLING AGENCY	12. MANUFACTURER'S DESIGNATION OF DRILL
4. HOLE NO. (As shown on drawing title and file number) 2-20C	13. TOTAL NO. OF OVER-BURDEN SAMPLES TAKEN — DISTURBED — UNDISTURB.
5. NAME OF DRILLER	14. TOTAL NUMBER CORE BOXES
6. DIRECTION OF HOLE ☐ VERTICAL ☐ INCLINED ____ DEG. FROM VERT.	15. ELEVATION GROUND WATER
7. THICKNESS OF OVERBURDEN	16. DATE HOLE — STARTED — COMPLETED
8. DEPTH DRILLED INTO ROCK	17. ELEVATION TOP OF HOLE
9. TOTAL DEPTH OF HOLE	18. TOTAL CORE RECOVERY FOR BORING %
	19. SIGNATURE OF INSPECTOR

ELEVATION a	DEPTH b	LEGEND c	CLASSIFICATION OF MATERIALS (Description) d	% CORE RECOVERY e	BOX OR SAMPLE NO. f	REMARKS (Drilling time, water loss, depth of weathering, etc., if significant) g
	50		Sh (cont.)			
	51			2.6 / 4.4		Ground core away during drilling
	52			-1.8		
	53			53.5		
				Run 7		
	54					
	55					
	56					
	57			6.6 / 7.2		
	58		Base of Hardinsburg 58.10'			
			Top of Golconda/Haney	>0.6		
			limestone, grBr, mass f-m crystalline, fossiliferous, v hd, v dun	-0.2		
	59					
	60					

ENG FORM 1072 PROJECT HOLE NO.

Hole No. 2-20C

DRILLING LOG	DIVISION	INSTALLATION	SHEET 7 OF 15 SHEETS

1. PROJECT	10. SIZE AND TYPE OF BIT
2. LOCATION (Coordinates or Station)	11. DATUM FOR ELEVATION SHOWN (TBM or MSL)
3. DRILLING AGENCY	12. MANUFACTURER'S DESIGNATION OF DRILL
4. HOLE NO. (As shown on drawing title and file number) 2-20C	13. TOTAL NO. OF OVER-BURDEN SAMPLES TAKEN — DISTURBED — UNDISTURBED
5. NAME OF DRILLER	14. TOTAL NUMBER CORE BOXES
6. DIRECTION OF HOLE ☐ VERTICAL ☐ INCLINED ____ DEG. FROM VERT.	15. ELEVATION GROUND WATER
7. THICKNESS OF OVERBURDEN	16. DATE HOLE — STARTED — COMPLETED
8. DEPTH DRILLED INTO ROCK	17. ELEVATION TOP OF HOLE
9. TOTAL DEPTH OF HOLE	18. TOTAL CORE RECOVERY FOR BORING %
	19. SIGNATURE OF INSPECTOR

ELEVATION a	DEPTH b	LEGEND c	CLASSIFICATION OF MATERIALS (Description) d	% CORE RECOVERY e	BOX OR SAMPLE NO. f	REMARKS (Drilling time, water loss, depth of weathering, etc., if significant) g
	60			60.3		pull depth
		18/	sh	60.7		
				Run 8		
	61		Shaley Limestone			
			(sh) Gr th bd w/sh pts			
	62					
	63			5.4 / 5.0		
				~~+0.4~~		
	64		Limestone, crystline (as above)			
	65	9/	sh			
			Base of Golconda Limey / Top of Indian Springs (65.6') (Big Clifty fm)	65.7		
				Run 9		
	66		Shale, blk, th bd, platey, carbonaceous, occ pyrite nodules,			
	67			2.0 / 4.0		ground core away during drilling
	68			-2.0		
	69					Reamed hole & set 4" PVC casing to 69.7' 6/21/88
				69.7		
				Run 10		
	70					

ENG FORM 1836 PREVIOUS EDITIONS ARE OBSOLETE PROJECT HOLE NO.

Hole No. 2-20C

DRILLING LOG	DIVISION	INSTALLATION	SHEET 8 OF 15 SHEETS

1. PROJECT	10. SIZE AND TYPE OF BIT
2. LOCATION (Coordinates or Station)	11. DATUM FOR ELEVATION SHOWN (TBM or MSL)
3. DRILLING AGENCY	12. MANUFACTURER'S DESIGNATION OF DRILL
4. HOLE NO. (As shown on drawing title and file number) 2-20C	13. TOTAL NO. OF OVER-BURDEN SAMPLES TAKEN — DISTURBED — UNDISTURBED
5. NAME OF DRILLER	14. TOTAL NUMBER CORE BOXES
6. DIRECTION OF HOLE ☐ VERTICAL ☐ INCLINED ____ DEG. FROM VERT.	15. ELEVATION GROUND WATER
7. THICKNESS OF OVERBURDEN	16. DATE HOLE — STARTED — COMPLETED
8. DEPTH DRILLED INTO ROCK	17. ELEVATION TOP OF HOLE
9. TOTAL DEPTH OF HOLE	18. TOTAL CORE RECOVERY FOR BORING %
	19. SIGNATURE OF INSPECTOR

ELEVATION a	DEPTH b	LEGEND c	CLASSIFICATION OF MATERIALS (Description) d	% CORE RECOVERY e	BOX OR SAMPLE NO. f	REMARKS (Drilling time, water loss, depth of weathering, etc., if significant) g
	70		Sh (cont.)			
	71			3.6/3.8		
	72			-0.2		
	73			73.5 Run 11		
	74					
	75			2.6/3.0 -0.4		
	76			76.5 Run 12		
	77					
	78					
	79			6.6/7.0 -0.4		
	80					

ENG FORM 1836 PREVIOUS EDITIONS ARE OBSOLETE PROJECT HOLE NO.

Hole No. 2-20c

DRILLING LOG	DIVISION	INSTALLATION	SHEET 9 OF 15 SHEETS

1. PROJECT
2. LOCATION (Coordinates or Station)
3. DRILLING AGENCY
4. HOLE NO. (As shown on drawing title and file number): 2-20c
5. NAME OF DRILLER
6. DIRECTION OF HOLE: ☐ VERTICAL ☐ INCLINED _____ DEG. FROM VERT.
7. THICKNESS OF OVERBURDEN
8. DEPTH DRILLED INTO ROCK
9. TOTAL DEPTH OF HOLE
10. SIZE AND TYPE OF BIT
11. DATUM FOR ELEVATION SHOWN (TBM or MSL)
12. MANUFACTURER'S DESIGNATION OF DRILL
13. TOTAL NO. OF OVER-BURDEN SAMPLES TAKEN: DISTURBED / UNDISTURBED
14. TOTAL NUMBER CORE BOXES
15. ELEVATION GROUND WATER
16. DATE HOLE: STARTED / COMPLETED
17. ELEVATION TOP OF HOLE
18. TOTAL CORE RECOVERY FOR BORING %
19. SIGNATURE OF INSPECTOR

ELEVATION a	DEPTH b	LEGEND c	CLASSIFICATION OF MATERIALS (Description) d	% CORE RECOVERY e	BOX OR SAMPLE NO. f	REMARKS (Drilling time, water loss, depth of weathering, etc., if significant) g
	80		Shale (cont)			
	81					
	82					
	83			83.5		
	84	90°	Shaley Ls, m Gr, th bd hd platy Ls w/sh pts. Jt rough irregular, stn	Run 13		
	85		Base of Indian Springs			
	86		Top of Big Clifty SS (ES.1) Sandstone, Buff-y Tan, mass, vf-f grained, occ olive ~~shale pts in top~~, rippled, oxidized, friable	10.0		
	87			10.0		
	88					
	89					
	90					

ENG FORM 1836 PROJECT

Hole No. Z-20C

DRILLING LOG	DIVISION	INSTALLATION	SHEET 10 OF 15 SHEETS

1. PROJECT
2. LOCATION (Coordinates or Station)
3. DRILLING AGENCY
4. HOLE NO. (As shown on drawing title and file number) Z-20C
5. NAME OF DRILLER
6. DIRECTION OF HOLE ☐ VERTICAL ☐ INCLINED _____ DEG. FROM VERT.
7. THICKNESS OF OVERBURDEN
8. DEPTH DRILLED INTO ROCK
9. TOTAL DEPTH OF HOLE
10. SIZE AND TYPE OF BIT
11. DATUM FOR ELEVATION SHOWN (TBM or MSL)
12. MANUFACTURER'S DESIGNATION OF DRILL
13. TOTAL NO. OF OVER-BURDEN SAMPLES TAKEN | DISTURBED | UNDISTURB.
14. TOTAL NUMBER CORE BOXES
15. ELEVATION GROUND WATER
16. DATE HOLE | STARTED | COMPLETED
17. ELEVATION TOP OF HOLE
18. TOTAL CORE RECOVERY FOR BORING %
19. SIGNATURE OF INSPECTOR

ELEVATION a	DEPTH b	LEGEND c	CLASSIFICATION OF MATERIALS (Description) d	% CORE RECOVERY e	BOX OR SAMPLE NO. f	REMARKS (Drilling time, water loss, depth of weathering, etc., if significant) g
	90		SS (cont.)			
	91					
	92					
	93			93.5		
				Run 4		
	94					
	95					
	96	S				
		90°		9.7		
	97			9.0		
	98			>0.1		
	99					
	100					

ENG FORM 1836 PROVIOUS

Hole No. 2-20C

DRILLING LOG	DIVISION	INSTALLATION	SHEET 11 OF 15 SHEETS

1. PROJECT	10. SIZE AND TYPE OF BIT
2. LOCATION (Coordinates or Station)	11. DATUM FOR ELEVATION SHOWN (TBM or MSL)
3. DRILLING AGENCY	12. MANUFACTURER'S DESIGNATION OF DRILL
4. HOLE NO. (As shown on drawing title and file number) 2-20C	13. TOTAL NO. OF OVER-BURDEN SAMPLES TAKEN: DISTURBED / UNDISTURBED
5. NAME OF DRILLER	14. TOTAL NUMBER CORE BOXES
6. DIRECTION OF HOLE ☐ VERTICAL ☐ INCLINED ____ DEG. FROM VERT.	15. ELEVATION GROUND WATER
7. THICKNESS OF OVERBURDEN	16. DATE HOLE: STARTED / COMPLETED
8. DEPTH DRILLED INTO ROCK	17. ELEVATION TOP OF HOLE
9. TOTAL DEPTH OF HOLE	18. TOTAL CORE RECOVERY FOR BORING %
	19. SIGNATURE OF INSPECTOR

ELEVATION a	DEPTH b	LEGEND c	CLASSIFICATION OF MATERIALS (Description) d	% CORE RECOVERY e	BOX OR SAMPLE NO. f	REMARKS (Drilling time, water loss, depth of weathering, etc., if significant) g
	100		sandstone (cont.)			
	101					
	102					
	103			103.2 / ~~103.3~~ Run 15		Filled pit.
	104					
	105					
	106					
	107			10.1 / 10.0		
	108			+0.1		
	109					
	110					

ENG FORM 1836 PROJECT

Hole No. 2-20C

DRILLING LOG	DIVISION	INSTALLATION	SHEET 12 OF 15 SHEETS

1. PROJECT	10. SIZE AND TYPE OF BIT
2. LOCATION (Coordinates or Station)	11. DATUM FOR ELEVATION SHOWN (TBM or MSL)
3. DRILLING AGENCY	12. MANUFACTURER'S DESIGNATION OF DRILL
4. HOLE NO. (As shown on drawing title and file number) 2-20C	13. TOTAL NO. OF OVER-BURDEN SAMPLES TAKEN — DISTURBED — UNDISTUR
5. NAME OF DRILLER	14. TOTAL NUMBER CORE BOXES
6. DIRECTION OF HOLE ☐ VERTICAL ☐ INCLINED ____ DEG. FROM VERT.	15. ELEVATION GROUND WATER
7. THICKNESS OF OVERBURDEN	16. DATE HOLE — STARTED — COMPLETED
8. DEPTH DRILLED INTO ROCK	17. ELEVATION TOP OF HOLE
9. TOTAL DEPTH OF HOLE	18. TOTAL CORE RECOVERY FOR BORING %
	19. SIGNATURE OF INSPECTOR

ELEVATION a	DEPTH b	LEGEND c	CLASSIFICATION OF MATERIALS (Description) d	% CORE RECOVERY e	BOX OR SAMPLE NO. f	REMARKS (Drilling time, water loss, depth of weathering, etc., if significant) g
	110		SS (cont.)			
	111	10				
	112					
	113			113.3 / Run 16		
	114					
	115					
	116					
	117			10.1 / 10.2		
	118					
	119					
	120					

ENG FORM

Hole No. 2-20C

DRILLING LOG	DIVISION	INSTALLATION	SHEET 13 OF 15 SHEETS

1. PROJECT	10. SIZE AND TYPE OF BIT
2. LOCATION (Coordinates or Station)	11. DATUM FOR ELEVATION SHOWN (TBM or MSL)
3. DRILLING AGENCY	12. MANUFACTURER'S DESIGNATION OF DRILL
4. HOLE NO. (As shown on drawing title and file number) 2-20C	13. TOTAL NO. OF OVER-BURDEN SAMPLES TAKEN — DISTURBED — UNDISTURBED
5. NAME OF DRILLER	14. TOTAL NUMBER CORE BOXES
6. DIRECTION OF HOLE ☐ VERTICAL ☐ INCLINED ____ DEG. FROM VERT.	15. ELEVATION GROUND WATER
7. THICKNESS OF OVERBURDEN	16. DATE HOLE — STARTED — COMPLETED
8. DEPTH DRILLED INTO ROCK	17. ELEVATION TOP OF HOLE
9. TOTAL DEPTH OF HOLE	18. TOTAL CORE RECOVERY FOR BORING %
	19. SIGNATURE OF INSPECTOR

ELEVATION a	DEPTH b	LEGEND c	CLASSIFICATION OF MATERIALS (Description) d	% CORE RECOVERY e	BOX OR SAMPLE NO. f	REMARKS (Drilling time, water loss, depth of weathering, etc., if significant) g
	120		Sandstone (cont.)			
	121					
	122					
	123		Base of Big Cliffy SS (123.2)			
			Top of Beech Creek Ls	123.5		Note: After Completion of Run 16, to a depth of 123.5', core BL. hung in hole; Attempts to remove failed. Move over ~10' & drilled second boring down to 145.7' with a R.R. Bit. Determined thickness of Beech Creek Ls by drilling characteristics.
	124		Limestone, mgrBr, Crystalline, fossiliferous, vhd, vden.			
	125					
	126			R. R. Bit		
	127					
	128					
	129					
	130					

ENG FORM 1836 — PROJECT — HOLE NO.

Hole No. 2-20c

DRILLING LOG	DIVISION	INSTALLATION	SHEET 14 OF 15 SHEETS

1. PROJECT
2. LOCATION (Coordinates or Station)
3. DRILLING AGENCY
4. HOLE NO. (As shown on drawing title and file number) 2-20c
5. NAME OF DRILLER
6. DIRECTION OF HOLE ☐ VERTICAL ☐ INCLINED _____ DEG. FROM VERT.
7. THICKNESS OF OVERBURDEN
8. DEPTH DRILLED INTO ROCK
9. TOTAL DEPTH OF HOLE
10. SIZE AND TYPE OF BIT
11. DATUM FOR ELEVATION SHOWN (TBM or MSL)
12. MANUFACTURER'S DESIGNATION OF DRILL
13. TOTAL NO. OF OVER-BURDEN SAMPLES TAKEN | DISTURBED | UNDISTURBED
14. TOTAL NUMBER CORE BOXES
15. ELEVATION GROUND WATER
16. DATE HOLE | STARTED | COMPLETED
17. ELEVATION TOP OF HOLE
18. TOTAL CORE RECOVERY FOR BORING %
19. SIGNATURE OF INSPECTOR

ELEVATION a	DEPTH b	LEGEND c	CLASSIFICATION OF MATERIALS (Description) d	% CORE RECOVERY e	BOX OR SAMPLE NO. f	REMARKS (Drilling time, water loss, depth of weathering, etc., if significant) g
	130		Limestone (cont.)			
	131					
	132					
	133					
	134					
				R.		
	135			R.		
				B.t		
	136					
	137					
	138					
	139					
	140					

ENG FORM 1836 PROJECT HOLE NO.

Hole No. 2-20C

DRILLING LOG	DIVISION	INSTALLATION	SHEET 15 OF 15 SHEETS

1. PROJECT	10. SIZE AND TYPE OF BIT
2. LOCATION (Coordinates or Station)	11. DATUM FOR ELEVATION SHOWN (TBM or MSL)
3. DRILLING AGENCY	12. MANUFACTURER'S DESIGNATION OF DRILL
4. HOLE NO. (As shown on drawing title and file number) 2-20C	13. TOTAL NO. OF OVER-BURDEN SAMPLES TAKEN — DISTURBED — UNDISTURBED
5. NAME OF DRILLER	14. TOTAL NUMBER CORE BOXES
6. DIRECTION OF HOLE ☐ VERTICAL ☐ INCLINED ____ DEG. FROM VERT.	15. ELEVATION GROUND WATER
7. THICKNESS OF OVERBURDEN	16. DATE HOLE — STARTED — COMPLETED
8. DEPTH DRILLED INTO ROCK	17. ELEVATION TOP OF HOLE
9. TOTAL DEPTH OF HOLE	18. TOTAL CORE RECOVERY FOR BORING %
	19. SIGNATURE OF INSPECTOR

ELEVATION a	DEPTH b	LEGEND c	CLASSIFICATION OF MATERIALS (Description) d	% CORE RECOVERY e	BOX OR SAMPLE NO. f	REMARKS (Drilling time, water loss, depth of weathering, etc., if significant) g
	140		LS (cont.)			
	141			R.		
				R.		
	142			B.t		
	143					
	144					
			Base of Rock Cont. - 144.7'			
	145		Elwin fm shale			
	146		Bot. Depth 145.7'			

ENG FORM 1076 PREVIOUS EDITIONS ARE OBSOLETE — PROJECT — HOLE NO.

HOLE NO. WES-2-20C-8

DRILLING LOG	DIVISION	INSTALLATION	SHEET OF SHEETS

1. PROJECT	10. SIZE AND TYPE OF BIT
2. LOCATION (Coordinates or Station)	11. DATUM FOR ELEVATION SHOWN (TBM or MSL)
3. DRILLING AGENCY	12. MANUFACTURER'S DESIGNATION OF DRILL
4. HOLE NO. (As shown on drawing title and file number)	13. TOTAL NO. OF OVER-BURDEN SAMPLES TAKEN — DISTURBED — UNDISTU
5. NAME OF DRILLER	14. TOTAL NUMBER CORE BOXES
6. DIRECTION OF HOLE ☐ VERTICAL ☐ INCLINED ____ DEG. FROM VERT.	15. ELEVATION GROUND WATER
7. THICKNESS OF OVERBURDEN	16. DATE HOLE — STARTED — COMPLETED
8. DEPTH DRILLED INTO ROCK	17. ELEVATION TOP OF HOLE
9. TOTAL DEPTH OF HOLE	18. TOTAL CORE RECOVERY FOR BORING %
	19. SIGNATURE OF INSPECTOR

ELEVATION a	DEPTH b	LEGEND c	CLASSIFICATION OF MATERIALS (Description) d	% CORE RECOVERY e	BOX OR SAMPLE NO. f	REMARKS (Drilling time, water loss, depth of weathering, etc., if significant) g
			Well No: WES-2-20C-8B			Date well screen was set: 6/29/88
715.06			+2.5 715.06			
			0.0' Ground surface 712.56			
			Grout mixture			Water level just Prior to setting screen –
			50.0 Bentonite			
			55.0 Sand			
			80.0			
			Bentonite Pellets			
			85.0			
						PVC Screen + Riser
			Filter Pack			
577.86			134.7			
			Well Screen			
567.86			144.7			
			Trap			
			145.7			
			145.7 Boring Depth			

ENG FORM 1836 PREVIOUS EDITIONS ARE OBSOLETE | PROJECT | HOLE NO.

Hole No. WES-2-20C-88

DRILLING LOG	DIVISION	INSTALLATION	SHEET OF SHEETS

1. PROJECT	10. SIZE AND TYPE OF BIT
2. LOCATION (Coordinates or Station)	11. DATUM FOR ELEVATION SHOWN (TBM or MSL)
3. DRILLING AGENCY	12. MANUFACTURER'S DESIGNATION OF DRILL
4. HOLE NO. (As shown on drawing title and file number)	13. TOTAL NO. OF OVER-BURDEN SAMPLES TAKEN — DISTURBED — UNDISTURBED
5. NAME OF DRILLER	14. TOTAL NUMBER CORE BOXES
6. DIRECTION OF HOLE ☐ VERTICAL ☐ INCLINED ____ DEG. FROM VERT.	15. ELEVATION GROUND WATER
7. THICKNESS OF OVERBURDEN	16. DATE HOLE — STARTED — COMPLETED
8. DEPTH DRILLED INTO ROCK	17. ELEVATION TOP OF HOLE
9. TOTAL DEPTH OF HOLE	18. TOTAL CORE RECOVERY FOR BORING %
	19. SIGNATURE OF INSPECTOR

ELEVATION a	DEPTH b	LEGEND c	CLASSIFICATION OF MATERIALS (Description) d	% CORE RECOVERY e	BOX OR SAMPLE NO. f	REMARKS (Drilling time, water loss, depth of weathering, etc., if significant) g
			Well No: WES-2-20CP2-88			Date well screen was set: 6/22/88
714.92			+2.5 714.92			
			0.0 Ground surface 712.42			
			Grout mixture			Water level just Prior to setting screen –
			50.0			
			Bentonite Pellets			
			53.0			Pvc Risor & screen
			Filter Pack			
656.42			56.0			
			Well Screen			
646.52			66.0			
			Trap			
			67.0			
			67.0 Boring Depth			

ENG FORM 1836 PREVIOUS EDITIONS ARE OBSOLETE. PROJECT HOLE NO.

DRILLING LOG

DIVISION	
INSTALLATION	
SHEET	OF SHEETS
1. PROJECT	
2. LOCATION (Coordinates or Station)	
3. DRILLING AGENCY	
4. HOLE NO. (As shown on drawing title and file number)	
5. NAME OF DRILLER	
6. DIRECTION OF HOLE	☐ VERTICAL ☐ INCLINED _____ DEG. FROM VERT.
7. THICKNESS OF OVERBURDEN	
8. DEPTH DRILLED INTO ROCK	
9. TOTAL DEPTH OF HOLE	
10. SIZE AND TYPE OF BIT	
11. DATUM FOR ELEVATION SHOWN (TBM or MSL)	
12. MANUFACTURER'S DESIGNATION OF DRILL	
13. TOTAL NO. OF OVER-BURDEN SAMPLES TAKEN	DISTURBED / UNDISTURBED
14. TOTAL NUMBER CORE BOXES	
15. ELEVATION GROUND WATER	
16. DATE HOLE	STARTED / COMPLETED
17. ELEVATION TOP OF HOLE	
18. TOTAL CORE RECOVERY FOR BORING	%
19. SIGNATURE OF INSPECTOR	

ELEVATION a	DEPTH b	LEGEND c	CLASSIFICATION OF MATERIALS (Description) d	% CORE RECOVERY e	BOX OR SAMPLE NO. f	REMARKS (Drilling time, water loss, depth of weathering, etc., if significant) g
			Well No: WES-2-20CP3-88			Date well screen was set: 6/23/88
714.78			+2.5'			
			0.0' Ground surface			
			Grout mixture			Water level just Prior to setting screen –
			15.0			
			Bentonite Pellets			
			20.0			PVC Screen Ri
			Filter Pack			
684.27			28.0			
			Well Screen			
674.27			38.0			
			Trap			
			39.0			
			39.0 Boring Depth			

ENG FORM 1836 PREVIOUS EDITIONS ARE OBSOLETE PROJECT HOLE NO.

Hole No. WES-2-21C-90

DRILLING LOG	DIVISION U.S. Navy	INSTALLATION NWSC Crane In.	SHEET 1 OF 9 SHEETS

1. PROJECT: Hydrogeologic Studies DBG Site
2. LOCATION (Coordinates or Station):
3. DRILLING AGENCY: WES
4. HOLE NO. (As shown on drawing title and file number): WES-2-21C-90
5. NAME OF DRILLER: Dan Taylor
6. DIRECTION OF HOLE: ☑ VERTICAL ☐ INCLINED _____ DEG. FROM VERT.
7. THICKNESS OF OVERBURDEN: 8.0
8. DEPTH DRILLED INTO ROCK:
9. TOTAL DEPTH OF HOLE: 167.8
10. SIZE AND TYPE OF BIT: HQ wireline
11. DATUM FOR ELEVATION SHOWN (TBM or MSL): MSL
12. MANUFACTURER'S DESIGNATION OF DRILL: Failing 1500
13. TOTAL NO. OF OVER-BURDEN SAMPLES TAKEN: DISTURBED: UNDISTURBED:
14. TOTAL NUMBER CORE BOXES:
15. ELEVATION GROUND WATER:
16. DATE HOLE: STARTED 9/6/90 COMPLETED 9/12/90
17. ELEVATION TOP OF HOLE: 726.48 GS
18. TOTAL CORE RECOVERY FOR BORING: %
19. SIGNATURE OF ~~INSPECTOR~~: Geologist Richard W. Hunt

ELEVATION a	DEPTH b	LEGEND c	CLASSIFICATION OF MATERIALS (Description) d	% CORE RECOVERY e	BOX OR SAMPLE NO. f	REMARKS (Drilling time, water loss, depth of weathering, etc., if significant) g
	0		Silty clay, y tan dr, w/occ SS frags. soft-firm mod-sl moist			0.0 to 8.0' Auger
	2					No well screen was set in this boring.
				Auger		
	4					
	6		(NO WELL)			
	8			8.0'		8' Pvc casing to 8.0' (Refusal)
			shly SS - sdy sh th bd vf lGr w/ lim stn along jts mod hd (tough)	R.R 3.4		
	10			11.1 Run 1		
	12					Started coring w/HQ wireline at 11.1
	14		(14.4)	7.9 / 9.0		
			SS, rust, Br stained, f-m carb inclusions, hd, oxidized (15.8)	1.1		
	16		sdy sh - shly SS, m Gr th bd, occ "slump shears" vf, bd dip 5 to 10° hd.	0.3		
	18					
	20					19.3' - Full depth

ENG FORM 1836 PREVIOUS EDITIONS ARE OBSOLETE PROJECT

Hole No. WES-2-21C-90

DRILLING LOG	DIVISION	INSTALLATION	SHEET 2 OF 9 SHEETS

1. PROJECT	10. SIZE AND TYPE OF BIT
2. LOCATION (Coordinates or Station)	11. DATUM FOR ELEVATION SHOWN (TBM or MSL)
3. DRILLING AGENCY	12. MANUFACTURER'S DESIGNATION OF DRILL
4. HOLE NO. (As shown on drawing title and file number) WES-2-21C-90	13. TOTAL NO. OF OVER-BURDEN SAMPLES TAKEN: DISTURBED / UNDISTURBED
5. NAME OF DRILLER	14. TOTAL NUMBER CORE BOXES
6. DIRECTION OF HOLE ☐ VERTICAL ☐ INCLINED ____ DEG. FROM VERT.	15. ELEVATION GROUND WATER
7. THICKNESS OF OVERBURDEN	16. DATE HOLE: STARTED / COMPLETED
8. DEPTH DRILLED INTO ROCK	17. ELEVATION TOP OF HOLE
9. TOTAL DEPTH OF HOLE	18. TOTAL CORE RECOVERY FOR BORING %
	19. SIGNATURE OF INSPECTOR

ELEVATION a	DEPTH b	LEGEND c	CLASSIFICATION OF MATERIALS (Description) d	% CORE RECOVERY e	BOX OR SAMPLE NO. f	REMARKS (Drilling time, water loss, depth of weathering, etc., if significant) g
	20		(Cont.)	Run 2	20.1	
				3.7 / 2.4		
	22		22.0	+0.8		
			Shale, Blk, thbd. mass, hd, occ 1gr discont vf ss pts. Carb.	23.0		
				Run 3		
	24					
	26			10.0 / 10.0		
	28					(Core seg ≥ 4' long)
	30					
	32			33.0		
				Run 4		9/7/90
	34					
			sdy, conglomeritic, dGrt Br			
	36			9.9 / 10.0		
				99.1		
	38					
	40					

ENG FORM 1836 PREVIOUS EDITIONS ARE OBSOLETE PROJECT HOLE NO.

Hole No. WES-2-21C-90

DRILLING LOG	DIVISION	INSTALLATION	SHEET 3 OF 9 SHEETS

1. PROJECT	10. SIZE AND TYPE OF BIT
2. LOCATION (Coordinates or Station)	11. DATUM FOR ELEVATION SHOWN (TBM or MSL)
3. DRILLING AGENCY	12. MANUFACTURER'S DESIGNATION OF DRILL
4. HOLE NO. (As shown on drawing title and file number) WES-2-21C-90	13. TOTAL NO. OF OVER-BURDEN SAMPLES TAKEN: DISTURBED / UNDISTURBED
5. NAME OF DRILLER	14. TOTAL NUMBER CORE BOXES
6. DIRECTION OF HOLE ☐ VERTICAL ☐ INCLINED ____ DEG. FROM VERT.	15. ELEVATION GROUND WATER
7. THICKNESS OF OVERBURDEN	16. DATE HOLE: STARTED / COMPLETED
8. DEPTH DRILLED INTO ROCK	17. ELEVATION TOP OF HOLE
9. TOTAL DEPTH OF HOLE	18. TOTAL CORE RECOVERY FOR BORING %
	19. SIGNATURE OF INSPECTOR

ELEVATION a	DEPTH b	LEGEND c	CLASSIFICATION OF MATERIALS (Description) d	% CORE RECOVERY e	BOX OR SAMPLE NO. f	REMARKS (Drilling time, water loss, depth of weathering, etc., if significant) g
	40		Sh (Ca-!) (40.9)			
	42		Sandstone lGr th bd, vf, (Coarse + lgrBr in top 0.8') num dGr ell sh wavy, pts. thin lam.	43.0 Run5		42.9 — Pullout
	44					
	46		Boasm. wavy lam SS + Sh in bot half, occ Carb lines	10.1 / 10.0		
	48			40.1		
	50					
			Unconformity (51.2') (Hardinsburg fm)			PENN / MISS
	52		Sha, dGn, mass crumbly, siderite nodules in top 2-3'	53.0 Run6		
	54			1.6 / 2.4 55.4		10/18/90, Pullout [illegible]
	56		Change in dgree w/depth	Run7		10/10/90
	58			-2.0		
	60					

ENG FORM 1836 PREVIOUS EDITIONS ARE OBSOLETE PROJECT HOLE NO.

Hole No. WES-2-21-90

DRILLING LOG	DIVISION	INSTALLATION	SHEET 4 OF 9 SHEETS

1. PROJECT	10. SIZE AND TYPE OF BIT
2. LOCATION (Coordinates or Station)	11. DATUM FOR ELEVATION SHOWN (TBM or MSL)
3. DRILLING AGENCY	12. MANUFACTURER'S DESIGNATION OF DRILL
4. HOLE NO. (As shown on drawing title and file number) WES-2-21C-90	13. TOTAL NO. OF OVER-BURDEN SAMPLES TAKEN — DISTURBED — UNDISTURBED
5. NAME OF DRILLER	14. TOTAL NUMBER CORE BOXES
6. DIRECTION OF HOLE ☐ VERTICAL ☐ INCLINED ____ DEG. FROM VERT.	15. ELEVATION GROUND WATER
7. THICKNESS OF OVERBURDEN	16. DATE HOLE — STARTED — COMPLETED
8. DEPTH DRILLED INTO ROCK	17. ELEVATION TOP OF HOLE
9. TOTAL DEPTH OF HOLE	18. TOTAL CORE RECOVERY FOR BORING %
	19. SIGNATURE OF INSPECTOR

ELEVATION a	DEPTH b	LEGEND c	CLASSIFICATION OF MATERIALS (Description) d	% CORE RECOVERY e	BOX OR SAMPLE NO. f	REMARKS (Drilling time, water loss, depth of weathering, etc., if significant) g
	60		(Cont.)			
			60.7			
			Shale: sl. SS, dGn + lt. ripple + swirling bdg, ind vf			
	62					
				63.0		
				Run 8		
	64					
	66					
				1.7/10.3		
	68			-0.1		
			(69.4)			
	70		grades to more of a vf sdy sil. sh th lam dGn + dGr bdg but more so than above, because more shly w/ delpln, mica present			
	72					
				73.0		
				Run 9		
	74					
			(75.1)			
	76		grades to dGr thin bd fissile, micaceous, carb flakes occ	6.0/6.5		
				-0.5		
	78					79.1' pulling rods
				79.5		
	80			Run 10		9/11/90

ENG FORM 1836 PREVIOUS EDITIONS ARE OBSOLETE PROJECT HOLE NO.

Hole No. WES-2-21C-90

DRILLING LOG

DIVISION	
INSTALLATION	
SHEET 5 OF 9 SHEETS	
1. PROJECT	
2. LOCATION (Coordinates or Station)	
3. DRILLING AGENCY	
4. HOLE NO. (As shown on drawing title and file number)	WES-2-21C-90
5. NAME OF DRILLER	
6. DIRECTION OF HOLE	☐ VERTICAL ☐ INCLINED ____ DEG. FROM VERT.
7. THICKNESS OF OVERBURDEN	
8. DEPTH DRILLED INTO ROCK	
9. TOTAL DEPTH OF HOLE	
10. SIZE AND TYPE OF BIT	
11. DATUM FOR ELEVATION SHOWN (TBM or MSL)	
12. MANUFACTURER'S DESIGNATION OF DRILL	
13. TOTAL NO. OF OVER-BURDEN SAMPLES TAKEN	DISTURBED / UNDISTURBED
14. TOTAL NUMBER CORE BOXES	
15. ELEVATION GROUND WATER	
16. DATE HOLE	STARTED / COMPLETED
17. ELEVATION TOP OF HOLE	
18. TOTAL CORE RECOVERY FOR BORING %	
19. SIGNATURE OF INSPECTOR	

ELEVATION a	DEPTH b	LEGEND c	CLASSIFICATION OF MATERIALS (Description) d	% CORE RECOVERY e	BOX OR SAMPLE NO. f	REMARKS (Drilling time, water loss, depth of weathering, etc., if significant) g
	80		Sh (cont)			
				3.9/3.5		
	82			+0.4		
			← 1/2' ls lens			
			← 1/2' ls lens	83.0		
				Run 11		
	84			2.9/3.0		
				-0.1		
			← Ls lens			
	86			86.0		
				Run 12		
	88					
				5.8/7.0		
	90			-1.2		
	92		Base of Hardinsburg fm 92.1 (Gakonda)			
			Ls m Br, dsn 93.0	93.0		
			(Indian Spring ?)	Run 13		
	94		Shale dGr, ilbd fossiliferous, arg silty pts			
	96			8.1/9.8		Sh zone appears to be a blend of Gakonda + Ind Spring w/ no apparent boundary
	98		← Ls lens	7.7 -0.7		
			Carb traces in bot zone			
	100					

ENG FORM 1836 PREVIOUS EDITIONS ARE OBSOLETE PROJECT HOLE NO.

Hole No. WFS-2-EK-90

DRILLING LOG	DIVISION	INSTALLATION	SHEET 6 OF 9 SHEETS

1. PROJECT
2. LOCATION (Coordinates or Station)
3. DRILLING AGENCY
4. HOLE NO. (As shown on drawing title and file number) WFS-2-EK-90
5. NAME OF DRILLER
6. DIRECTION OF HOLE ☐ VERTICAL ☐ INCLINED _____ DEG. FROM VERT.
7. THICKNESS OF OVERBURDEN
8. DEPTH DRILLED INTO ROCK
9. TOTAL DEPTH OF HOLE
10. SIZE AND TYPE OF BIT
11. DATUM FOR ELEVATION SHOWN (TBM or MSL)
12. MANUFACTURER'S DESIGNATION OF DRILL
13. TOTAL NO. OF OVER-BURDEN SAMPLES TAKEN | DISTURBED | UNDISTURBED
14. TOTAL NUMBER CORE BOXES
15. ELEVATION GROUND WATER
16. DATE HOLE | STARTED | COMPLETED
17. ELEVATION TOP OF HOLE
18. TOTAL CORE RECOVERY FOR BORING %
19. SIGNATURE OF INSPECTOR

ELEVATION a	DEPTH b	LEGEND c	CLASSIFICATION OF MATERIALS (Description) d	% CORE RECOVERY e	BOX OR SAMPLE NO. f	REMARKS (Drilling time, water loss, depth of weathering, etc., if significant) g
	100		Sh (cont.)			
	102			101.8		Pull depth
				102.8		
				Run 14		
	104					
				6.2 / 5.2		
	106			N.0		
			(Base of Ind sp) 107.3 (Top of Big Chlt, SS)			
	108		Sandstone, olive tan, high, ... of clays, in top 2', vf, th bd, shallow ripples, sli friable	108.0		
				Run 15		
	110			4.7 / 5.0		
				-0.3		
	112					
		0		113.0		
				Run 16		
	114	0				
	116			10.0 / 10.0		
	118	0				
	120					

ENG FORM 1836 PREVIOUS EDITIONS ARE OBSOLETE PROJECT

Hole No. WES-2-21C-90

DRILLING LOG	DIVISION	INSTALLATION	SHEET 7 OF 9 SHEETS

1. PROJECT	10. SIZE AND TYPE OF BIT
2. LOCATION (Coordinates or Station)	11. DATUM FOR ELEVATION SHOWN (TBM or MSL)
3. DRILLING AGENCY	12. MANUFACTURER'S DESIGNATION OF DRILL
4. HOLE NO. (As shown on drawing title and file number) WES-2-21C-90	13. TOTAL NO. OF OVER-BURDEN SAMPLES TAKEN — DISTURBED — UNDISTURBED
5. NAME OF DRILLER	14. TOTAL NUMBER CORE BOXES
6. DIRECTION OF HOLE ☐ VERTICAL ☐ INCLINED ____ DEG. FROM VERT.	15. ELEVATION GROUND WATER
7. THICKNESS OF OVERBURDEN	16. DATE HOLE — STARTED — COMPLETED
8. DEPTH DRILLED INTO ROCK	17. ELEVATION TOP OF HOLE
9. TOTAL DEPTH OF HOLE	18. TOTAL CORE RECOVERY FOR BORING %
	19. SIGNATURE OF INSPECTOR

ELEVATION a	DEPTH b	LEGEND c	CLASSIFICATION OF MATERIALS (Description) d	% CORE RECOVERY e	BOX OR SAMPLE NO. f	REMARKS (Drilling time, water loss, depth of weathering, etc., if significant) g
	120		55 (cont.)			
		0				
	122					
		5		123.0		
				Run 17		
	124					
		0				
	126					
		0	1/2" clay			
				10.0 / 10.0		
	128	4 / 45 / 0	1/4" clay			
	130					
	132	0				
		0		133.0		
				Run 18		
		0				
	134					
		0				
			oxd			
		0				
	136					
				10.0 / 10.0		
	138					
	140					

ENG FORM 1836 PROJECT

Hole No. WFS-2-21C-90

DRILLING LOG	DIVISION	INSTALLATION	SHEET 8 OF 4 SHEETS

1. PROJECT	10. SIZE AND TYPE OF BIT
2. LOCATION (Coordinates or Station)	11. DATUM FOR ELEVATION SHOWN (TBM or MSL)
3. DRILLING AGENCY	12. MANUFACTURER'S DESIGNATION OF DRILL
4. HOLE NO. (As shown on drawing title and file number) WFS-2-21C-9	13. TOTAL NO. OF OVER-BURDEN SAMPLES TAKEN: DISTURBED / UNDISTURBED
5. NAME OF DRILLER	14. TOTAL NUMBER CORE BOXES
6. DIRECTION OF HOLE ☐ VERTICAL ☐ INCLINED ____ DEG. FROM VERT.	15. ELEVATION GROUND WATER
7. THICKNESS OF OVERBURDEN	16. DATE HOLE: STARTED / COMPLETED
8. DEPTH DRILLED INTO ROCK	17. ELEVATION TOP OF HOLE
9. TOTAL DEPTH OF HOLE	18. TOTAL CORE RECOVERY FOR BORING %
	19. SIGNATURE OF INSPECTOR

ELEVATION a	DEPTH b	LEGEND c	CLASSIFICATION OF MATERIALS (Description) d	% CORE RECOVERY e	BOX OR SAMPLE NO. f	REMARKS (Drilling time, water loss, depth of weathering, etc., if significant) g
	140		SC (Pond)			
	142		1/4" [illegible]			
				143.0 / Run 19		
	144					
	146		Base of Bisquit [illegible] 146.5 (Top of Bonds Creek Ls)			
			Limestone [illegible], m-c crystalline, granular mass, fossil [illegible] den, occ [illegible] lim stn in [illegible] half	9.9 / 10.0		
	148					
	150		Tan clay [illegible]			
	152			153.0 / Run 20		152.9 [illegible] depth
	154					
	156			10.1 / 10.0		
	158		Ls [illegible] d Gr [illegible] d Gr sdly [illegible]	+0.1		
	160					

ENG FORM 1836 PREVIOUS EDITIONS ARE OBSOLETE PROJECT

Hole No. WES-2-2KA0

DRILLING LOG	DIVISION	INSTALLATION	SHEET 9 OF 9 SHEETS

1. PROJECT	10. SIZE AND TYPE OF BIT
2. LOCATION (Coordinates or Station)	11. DATUM FOR ELEVATION SHOWN (TBM or MSL)
3. DRILLING AGENCY	12. MANUFACTURER'S DESIGNATION OF DRILL
4. HOLE NO. (As shown on drawing title and file number) WES-2-2KA0	13. TOTAL NO. OF OVER-BURDEN SAMPLES TAKEN — DISTURBED — UNDISTURBED
5. NAME OF DRILLER	14. TOTAL NUMBER CORE BOXES
6. DIRECTION OF HOLE ☐ VERTICAL ☐ INCLINED ____ DEG. FROM VERT.	15. ELEVATION GROUND WATER
	16. DATE HOLE — STARTED — COMPLETED
7. THICKNESS OF OVERBURDEN	17. ELEVATION TOP OF HOLE
8. DEPTH DRILLED INTO ROCK	18. TOTAL CORE RECOVERY FOR BORING %
9. TOTAL DEPTH OF HOLE	19. SIGNATURE OF INSPECTOR

ELEVATION a	DEPTH b	LEGEND c	CLASSIFICATION OF MATERIALS (Description) d	% CORE RECOVERY e	BOX OR SAMPLE NO. f	REMARKS (Drilling time, water loss, depth of weathering, etc., if significant) g
	160	30, 20	LS Crout			
	162	5	Tan clay / silt	163.0 / Run 21		
	164	20, 10, 60	Jts - sh	3.7 / 4.8		Note: Hung core bl in hole. Finally Broke of drill stem + core bl just above the Reaming shell. (left bit + Reaming shell in hole at ~ 155 to 160' depth).
	166	0	Base Beech Creek Ls 166.3' Top Ellerton fm Shale, d Gn, crumbly	1.1		
				167.8		
	168		Bot. Hole: 167.8'			Did not set screen at this site WT ____ in open hole ____ later after bailing.

ENG FORM 1836 PREVIOUS EDITIONS ARE OBSOLETE PROJECT HOLE NO.

Hole No. WES-2-22-90

DRILLING LOG	DIVISION US Navy	INSTALLATION NWSC Crane In	SHEET OF 10 SHEETS

1. PROJECT: Hydrogeologic Studies DBG site
2. LOCATION (Coordinates or Station):
3. DRILLING AGENCY: WES
4. HOLE NO. (As shown on drawing title and file number): WES-2-22-90
5. NAME OF DRILLER: Dan Taylor
6. DIRECTION OF HOLE: ☑ VERTICAL ☐ INCLINED ____ DEG. FROM VERT.
7. THICKNESS OF OVERBURDEN: 20.0'
8. DEPTH DRILLED INTO ROCK:
9. TOTAL DEPTH OF HOLE: 190.0
10. SIZE AND TYPE OF BIT: HQ wireline
11. DATUM FOR ELEVATION SHOWN (TBM or MSL): MSL
12. MANUFACTURER'S DESIGNATION OF DRILL: Failing 1500
13. TOTAL NO. OF OVER-BURDEN SAMPLES TAKEN: DISTURBED: UNDISTURBED:
14. TOTAL NUMBER CORE BOXES:
15. ELEVATION GROUND WATER:
16. DATE HOLE: STARTED 9/15/90 COMPLETED 10/15/90
17. ELEVATION TOP OF HOLE:
18. TOTAL CORE RECOVERY FOR BORING: %
19. SIGNATURE OF INSPECTOR: Richard W. Hunt

ELEVATION a	DEPTH b	LEGEND c	CLASSIFICATION OF MATERIALS (Description) d	% CORE RECOVERY e	BOX OR SAMPLE NO. f	REMARKS (Drilling time, water loss, depth of weathering, etc., if significant) g
	0		Silty-sandy clay, yellow-tan. Firm silt mottled at top, changes to dry w/depth			0.0 to 23.5 - Auger. Set 8" PVC casing to 23.5
	2					
	4					
	6					
	8		Less [illegible] below ~ 7.0' (Silty clay)			
	10					
	12					
	14					
	16					
	18					
	20					

ENG FORM 1836 PREVIOUS EDITIONS ARE OBSOLETE PROJECT HOLE NO.

Hole No. WES-2-22C-90

DRILLING LOG	DIVISION	INSTALLATION	SHEET 2 OF 10 SHEETS

1. PROJECT	10. SIZE AND TYPE OF BIT
2. LOCATION (Coordinates or Station)	11. DATUM FOR ELEVATION SHOWN (TBM or MSL)
3. DRILLING AGENCY	12. MANUFACTURER'S DESIGNATION OF DRILL
4. HOLE NO. (As shown on drawing title and file number) WES-2-22C-90	13. TOTAL NO. OF OVER-BURDEN SAMPLES TAKEN — DISTURBED — UNDISTURBED
5. NAME OF DRILLER	14. TOTAL NUMBER CORE BOXES
6. DIRECTION OF HOLE ☐ VERTICAL ☐ INCLINED ____ DEG. FROM VERT.	15. ELEVATION GROUND WATER
7. THICKNESS OF OVERBURDEN	16. DATE HOLE — STARTED — COMPLETED
8. DEPTH DRILLED INTO ROCK	17. ELEVATION TOP OF HOLE
9. TOTAL DEPTH OF HOLE	18. TOTAL CORE RECOVERY FOR BORING %
	19. SIGNATURE OF INSPECTOR

ELEVATION a	DEPTH b	LEGEND c	CLASSIFICATION OF MATERIALS (Description) d	% CORE RECOVERY e	BOX OR SAMPLE NO. f	REMARKS (Drilling time, water loss, depth of weathering, etc., if significant) g
	20		20.0' top of lt Gr Shale w/ occ lim stn + bd Soft			
	22					Reamed hole & set 23.5' of 20" Casing
				23.5		
	24			Run 1		
	26					
			(26.2')	7.7 / 8.2		
	28		Shale (soo bone) but. dk Gr, (no lim stn) + bd silt, Carb, no	1.0		
	30		(30.0')			
			Shale becomes interbedded w/ lt Gr silty ss pts, grading to mdr silty sh w/ occ silty ss pts w/ depth			
	32			32.4		
				Run 2		
	34					
	36			9.1 / 9.1		
	38			1.6		
			38.2'	0.4		
			Sandstone lBr. w/ abundant lim crusting in top 2' grading (Cali)			
	40					

ENG FORM 1836 PREVIOUS EDITIONS ARE OBSOLETE PROJECT HOLE NO.

Hole No. WES-2-22C-90

DRILLING LOG	DIVISION	INSTALLATION	SHEET 3 OF 10 SHEETS

1. PROJECT	10. SIZE AND TYPE OF BIT
2. LOCATION (Coordinates or Station)	11. DATUM FOR ELEVATION SHOWN (TBM or MSL)
3. DRILLING AGENCY	12. MANUFACTURER'S DESIGNATION OF DRILL
4. HOLE NO. (As shown on drawing title and file number) WES-2-22C-90	13. TOTAL NO. OF OVER-BURDEN SAMPLES TAKEN — DISTURBED — UNDISTURBED
5. NAME OF DRILLER	14. TOTAL NUMBER CORE BOXES
6. DIRECTION OF HOLE ☐ VERTICAL ☐ INCLINED ____ DEG. FROM VERT.	15. ELEVATION GROUND WATER
	16. DATE HOLE — STARTED — COMPLETED
7. THICKNESS OF OVERBURDEN	17. ELEVATION TOP OF HOLE
8. DEPTH DRILLED INTO ROCK	18. TOTAL CORE RECOVERY FOR BORING %
9. TOTAL DEPTH OF HOLE	19. SIGNATURE OF INSPECTOR

ELEVATION a	DEPTH b	LEGEND c	CLASSIFICATION OF MATERIALS (Description) d	% CORE RECOVERY e	BOX OR SAMPLE NO. f	REMARKS (Drilling time, water loss, depth of weathering, etc., if significant) g
	40		to 16r, vf f tn bd Sandstone w/ occ wave, dkr shly pts, ~ hor bd			
	42			42.1		41.9 – Pull depth
				Run 3		9/17/90
	44					
	46			10.2 / 10.2		
	48					Losing 30-40% water return
	50		No cvd below ~50'			
	52			52.3		52.1 – Pull depth
				Run 4		
	54					
	56			10.2 / 10.2		Losing ~ 40% water Return
	58			10.2		
	60					

ENG FORM 1836 PREVIOUS EDITIONS ARE OBSOLETE | PROJECT | HOLE NO.

C200

Hole No. WFS-2-22c-90

DRILLING LOG	DIVISION	INSTALLATION	SHEET 4 OF 10 SHEETS

1. PROJECT
2. LOCATION (Coordinates or Station)
3. DRILLING AGENCY
4. HOLE NO. (As shown on drawing title and file number) WFS-2-22c-90
5. NAME OF DRILLER
6. DIRECTION OF HOLE ☐ VERTICAL ☐ INCLINED _____ DEG. FROM VERT.
7. THICKNESS OF OVERBURDEN
8. DEPTH DRILLED INTO ROCK
9. TOTAL DEPTH OF HOLE
10. SIZE AND TYPE OF BIT
11. DATUM FOR ELEVATION SHOWN (TBM or MSL)
12. MANUFACTURER'S DESIGNATION OF DRILL
13. TOTAL NO. OF OVER-BURDEN SAMPLES TAKEN | DISTURBED | UNDISTURBED
14. TOTAL NUMBER CORE BOXES
15. ELEVATION GROUND WATER
16. DATE HOLE | STARTED | COMPLETED
17. ELEVATION TOP OF HOLE
18. TOTAL CORE RECOVERY FOR BORING %
19. SIGNATURE OF INSPECTOR

ELEVATION a	DEPTH b	LEGEND c	CLASSIFICATION OF MATERIALS (Description) d	% CORE RECOVERY e	BOX OR SAMPLE NO. f	REMARKS (Drilling time, water loss, depth of weathering, etc., if significant) g
	60		SS (Pen[illegible]			
	62			62.3 Run 5		
	64		64.3			
			Sandstone, lGr, vf, lamination w/ [illegible], wavy Sh pts ~ hor bd.	6.2/6.3		
	66					
	68		Unconformity (Hardinsburg Fm)	68.6 Run 6		PENN MISS
	70		Shale d Gn, mass, Crumbly dry, w/zones of [illegible] Sh/ Clay[illegible], hd	4.7/4.7		Reamed hole & set 6" dia pvc casing to 73.[illegible]
	72			73.[illegible] Run 7		9/22/9[illegible]
	74					
	76			4.3/0		[illegible] away during drilling
	78			4[illegible]		
	80					

ENG FORM 1836 PREVIOUS EDITIONS ARE OBSOLETE PROJECT HOLE NO.

C201

Hole No. WES-2-22C-90

DRILLING LOG	DIVISION	INSTALLATION	SHEET 5 OF 10 SHEETS

1. PROJECT	10. SIZE AND TYPE OF BIT
2. LOCATION (Coordinates or Station)	11. DATUM FOR ELEVATION SHOWN (TBM or MSL)
3. DRILLING AGENCY	12. MANUFACTURER'S DESIGNATION OF DRILL
4. HOLE NO. (As shown on drawing title and file number) WES-2-22-90	13. TOTAL NO. OF OVER-BURDEN SAMPLES TAKEN — DISTURBED — UNDISTURBED
5. NAME OF DRILLER	14. TOTAL NUMBER CORE BOXES
6. DIRECTION OF HOLE ☐ VERTICAL ☐ INCLINED ____ DEG. FROM VERT.	15. ELEVATION GROUND WATER
7. THICKNESS OF OVERBURDEN	16. DATE HOLE — STARTED — COMPLETED
8. DEPTH DRILLED INTO ROCK	17. ELEVATION TOP OF HOLE
9. TOTAL DEPTH OF HOLE	18. TOTAL CORE RECOVERY FOR BORING %
	19. SIGNATURE OF INSPECTOR

ELEVATION a	DEPTH b	LEGEND c	CLASSIFICATION OF MATERIALS (Description) d	% CORE RECOVERY e	BOX OR SAMPLE NO. f	REMARKS (Drilling time, water loss, depth of weathering, etc., if significant) g
	80		Sh (Cont)			
	82		(82.0')	82.0		
			Shale brownish dgn Gr, th bd & hard to soft	Run 8		
	84			3.0 / 5.0		
	86			(3.0)		Ground fell away
				87.8		
	88		88.2	Run 9		
			Sandstone, m gr Br, hd den (calc)? occ Sh pts			
	90		90.0	3.3 / 5.0		
			Shale d Gr, th bd, soft	1.2		
	92			92.8		
				Run 10		
	94					
	96			0.1 / 9.4		
	98			1.2		Ground fell away getting out of bl
	100					

ENG FORM 1836 PREVIOUS EDITIONS ARE OBSOLETE PROJECT HOLE NO.

C202

Hole No. WES-2-22C-90

DRILLING LOG	DIVISION	INSTALLATION	SHEET 6 OF 11 SHEETS

1. PROJECT	10. SIZE AND TYPE OF BIT
2. LOCATION (Coordinates or Station)	11. DATUM FOR ELEVATION SHOWN (TBM or MSL)
3. DRILLING AGENCY	12. MANUFACTURER'S DESIGNATION OF DRILL
4. HOLE NO. (As shown on drawing title and file number) WES-2-22C-90	13. TOTAL NO. OF OVER-BURDEN SAMPLES TAKEN — DISTURBED — UNDISTURBED
5. NAME OF DRILLER	14. TOTAL NUMBER CORE BOXES
6. DIRECTION OF HOLE ☐ VERTICAL ☐ INCLINED ____ DEG. FROM VERT.	15. ELEVATION GROUND WATER
7. THICKNESS OF OVERBURDEN	16. DATE HOLE — STARTED — COMPLETED
8. DEPTH DRILLED INTO ROCK	17. ELEVATION TOP OF HOLE
9. TOTAL DEPTH OF HOLE	18. TOTAL CORE RECOVERY FOR BORING %
	19. SIGNATURE OF INSPECTOR

ELEVATION a	DEPTH b	LEGEND c	CLASSIFICATION OF MATERIALS (Description) d	% CORE RECOVERY e	BOX OR SAMPLE NO. f	REMARKS (Drilling time, water loss, depth of weathering, etc., if significant) g
	100		Sh (cont.)			
			Base of Hartnsburg (101.5) (Top of Gakonda Ls).			
	102		Limestone lgr Br, highly oxid in top ft, hd, Crystalline, dan	102.2 Run 11 1.9/2.1 -0.2 104.3		10/11/90 (Took a 2 week break in drill time)
	104		(Base of Gakonda) 104.7 Top of Indian Spring (Big Cliffy fm) Shale, dk Gr, thin bd, fiss, carb flake along	Run 12		
	106			4.2/4.7 -0.5		Losing ~30% water in hole
	108			109.0		Reamed hole & set 4" pvc casing to 109.0'
	110			Run 13 1.0/4.0 -3.0 -1.5 113.0		10/13/90
	112					111.5 — Full depth
	114			Run 14 4.5/3.0 +1.5 116.0		
	116			Run 15		
	118			6.4/7.0 -0.6		
	120					

ENG FORM 1836 PROJECT HOLE NO.

Hole No. WES-2-22C-90

DRILLING LOG	DIVISION	INSTALLATION	SHEET 7 OF 10 SHEETS

1. PROJECT	10. SIZE AND TYPE OF BIT
2. LOCATION (Coordinates or Station)	11. DATUM FOR ELEVATION SHOWN (TBM or MSL)
3. DRILLING AGENCY	12. MANUFACTURER'S DESIGNATION OF DRILL
4. HOLE NO. (As shown on drawing title and file number) WES-2-22C-90	13. TOTAL NO. OF OVER-BURDEN SAMPLES TAKEN — DISTURBED — UNDISTURBED
5. NAME OF DRILLER	14. TOTAL NUMBER CORE BOXES
6. DIRECTION OF HOLE ☐ VERTICAL ☐ INCLINED ____ DEG. FROM VERT.	15. ELEVATION GROUND WATER
	16. DATE HOLE — STARTED — COMPLETED
7. THICKNESS OF OVERBURDEN	17. ELEVATION TOP OF HOLE
8. DEPTH DRILLED INTO ROCK	18. TOTAL CORE RECOVERY FOR BORING %
9. TOTAL DEPTH OF HOLE	19. SIGNATURE OF INSPECTOR

ELEVATION a	DEPTH b	LEGEND c	CLASSIFICATION OF MATERIALS (Description) d	% CORE RECOVERY e	BOX OR SAMPLE NO. f	REMARKS (Drilling time, water loss, depth of weathering, etc., if significant) g
	120		Sh (cont.)			
	122					
				123.0' Run 16		
	124			4.0/4.1		
	126			-0.1		
			(Base of Fin Sprs) (127.5) (Top Bagnell Ss)	127.1 Run 17		
	128		Sandstone, y-olive tan mass, w/ ripples, vf, homo, sli fria oxid			
	130			5.7/5.9		
				-0.2		
	132					
				133.0 Run 18		
	134					
	136					
			Less oxid below 139.0'	10.0/10.1		
	138					Losing ~30% Rat.
	140					

ENG FORM 1836 MAR 71 PREVIOUS EDITIONS ARE OBSOLETE. PROJECT HOLE NO.

C204

Hole No. WES-2-22C-

DRILLING LOG	DIVISION	INSTALLATION	SHEET 8 OF 10 SHEETS

1. PROJECT	10. SIZE AND TYPE OF BIT
2. LOCATION (Coordinates or Station)	11. DATUM FOR ELEVATION SHOWN (TBM or MSL)
3. DRILLING AGENCY	12. MANUFACTURER'S DESIGNATION OF DRILL
4. HOLE NO. (As shown on drawing title and file number) WES-2-22C-90	13. TOTAL NO. OF OVER-BURDEN SAMPLES TAKEN — DISTURBED — UNDISTURBED
5. NAME OF DRILLER	14. TOTAL NUMBER CORE BOXES
6. DIRECTION OF HOLE ☐ VERTICAL ☐ INCLINED ____ DEG. FROM VERT.	15. ELEVATION GROUND WATER
7. THICKNESS OF OVERBURDEN	16. DATE HOLE — STARTED — COMPLETED
8. DEPTH DRILLED INTO ROCK	17. ELEVATION TOP OF HOLE
9. TOTAL DEPTH OF HOLE	18. TOTAL CORE RECOVERY FOR BORING
	19. SIGNATURE OF INSPECTOR

ELEVATION a	DEPTH b	LEGEND c	CLASSIFICATION OF MATERIALS (Description) d	% CORE RECOVERY e	BOX OR SAMPLE NO. f	REMARKS (Drilling time, water loss, depth of weathering, etc., if significant) g
	140		SS (cont.)			
	142					
				143.0 / Run 19		
	144					
	146					
				9.4 / 9.7		
	148					
				-0.3		
	150					
	152					
				152.7 / Run 20		
	154					
	156					
				10.0 / 10.0		
	158					
	160					

ENG FORM 1836 MAR 71 PREVIOUS EDITIONS ARE OBSOLETE. PROJECT HOLE NO.

Hole No. WFS-2-22C-90

DRILLING LOG	DIVISION	INSTALLATION	SHEET 9 OF 10 SHEETS

1. PROJECT	10. SIZE AND TYPE OF BIT
2. LOCATION (Coordinates or Station)	11. DATUM FOR ELEVATION SHOWN (TBM or MSL)
3. DRILLING AGENCY	12. MANUFACTURER'S DESIGNATION OF DRILL
4. HOLE NO. (As shown on drawing title and file number) WFS-2-22C-90	13. TOTAL NO. OF OVER-BURDEN SAMPLES TAKEN — DISTURBED — UNDISTURBED
5. NAME OF DRILLER	14. TOTAL NUMBER CORE BOXES
6. DIRECTION OF HOLE ☐ VERTICAL ☐ INCLINED _____ DEG. FROM VERT.	15. ELEVATION GROUND WATER
	16. DATE HOLE — STARTED — COMPLETED
7. THICKNESS OF OVERBURDEN	17. ELEVATION TOP OF HOLE
8. DEPTH DRILLED INTO ROCK	18. TOTAL CORE RECOVERY FOR BORING %
9. TOTAL DEPTH OF HOLE	19. SIGNATURE OF INSPECTOR

ELEVATION a	DEPTH b	LEGEND c	CLASSIFICATION OF MATERIALS (Description) d	% CORE RECOVERY e	BOX OR SAMPLE NO. f	REMARKS (Drilling time, water loss, depth of weathering, etc., if significant) g
	160		SS (Co...)			
	162			162.7 Run 21		
	164		(Base Big Clift, SS) 164.6 (Top Bonn. Creek Ls)			
	166		Limestone, l-m gr Br. m crystalline mass hd. den fossil, occ stylolites			
	168			10.3 / 10.3		Losing ~ 40% return
	170					
	172			173.0 Run 22		Flange
	174					10/15 ...
	176		175.4 Ls change to dGr w/occ wavy dGr Shaley pts	96 / 10.0		
	178			-0.4 -0.1		
	180					

ENG FORM 1836 MAR 71 PREVIOUS EDITIONS ARE OBSOLETE. PROJECT HOLE NO.

Hole No. WES-2-22C

SHEET 10 OF 10 SHEETS

DRILLING LOG

DIVISION	
INSTALLATION	
1. PROJECT	
2. LOCATION (Coordinates or Station)	
3. DRILLING AGENCY	
4. HOLE NO. (As shown on drawing title and file number)	WES-2-22C-90
5. NAME OF DRILLER	
6. DIRECTION OF HOLE	☐ VERTICAL ☐ INCLINED ____ DEG. FROM VERT.
7. THICKNESS OF OVERBURDEN	
8. DEPTH DRILLED INTO ROCK	
9. TOTAL DEPTH OF HOLE	
10. SIZE AND TYPE OF BIT	
11. DATUM FOR ELEVATION SHOWN (TBM or MSL)	
12. MANUFACTURER'S DESIGNATION OF DRILL	
13. TOTAL NO. OF OVER-BURDEN SAMPLES TAKEN	DISTURBED / UNDISTURBED
14. TOTAL NUMBER CORE BOXES	
15. ELEVATION GROUND WATER	
16. DATE HOLE	STARTED / COMPLETED
17. ELEVATION TOP OF HOLE	
18. TOTAL CORE RECOVERY FOR BORING	%
19. SIGNATURE OF INSPECTOR	

ELEVATION a	DEPTH b	LEGEND c	CLASSIFICATION OF MATERIALS (Description) d	% CORE RECOVERY e	BOX OR SAMPLE NO. f	REMARKS (Drilling time, water loss, depth of weathering, etc., if significant) g
	180		LS (Cont.)			
	182					182.7 - Pull depth
				183.0 Run 23		
	184					
	186			6.2 / 7.0		Note: 0.3' of core loss from Run 22 is moved downward into sh zone in Run 23
			Base of Bedrock (186.7) (Top of Elmaron Fm)			
			Shale, d Gn, mass hd, crumbly	-0.8 -1.1		
	188					
	190			190.0		
			Bot. Depth 190.0'			

C207

ENG FORM 1836 MAR 71 PREVIOUS EDITIONS ARE OBSOLETE. PROJECT HOLE NO.

Hole No. WFS-2-22C-90

DRILLING LOG	DIVISION	INSTALLATION	SHEET OF SHEETS

1. PROJECT
2. LOCATION (Coordinates or Station)
3. DRILLING AGENCY
4. HOLE NO. (As shown on drawing title and file number)
5. NAME OF DRILLER
6. DIRECTION OF HOLE ☐ VERTICAL ☐ INCLINED _____ DEG. FROM VERT.
7. THICKNESS OF OVERBURDEN
8. DEPTH DRILLED INTO ROCK
9. TOTAL DEPTH OF HOLE
10. SIZE AND TYPE OF BIT
11. DATUM FOR ELEVATION SHOWN (TBM or MSL)
12. MANUFACTURER'S DESIGNATION OF DRILL
13. TOTAL NO. OF OVER-BURDEN SAMPLES TAKEN | DISTURBED | UNDISTURBED
14. TOTAL NUMBER CORE BOXES
15. ELEVATION GROUND WATER
16. DATE HOLE | STARTED | COMPLETED
17. ELEVATION TOP OF HOLE
18. TOTAL CORE RECOVERY FOR BORING %
19. SIGNATURE OF INSPECTOR

ELEVATION a	DEPTH b	LEGEND c	CLASSIFICATION OF MATERIALS (Description) d	% CORE RECOVERY e	BOX OR SAMPLE NO. f	REMARKS (Drilling time, water loss, depth of weathering, etc., if significant) g
			Well No: WFS-2-22C-90			Date well screen was set: 10/15/90
			+2.5			
			0.0 Ground surface			
			Grout mixture			Water level just Prior to setting Screen. –
			123.0			
			Bentonite Pellets			
			126.0			4" Casing [illegible] 109.0'
			Filter Pack			
			176.7			
			Well Screen			
			186.7			
			~~Trap~~			
			186.7'			
			190.0 Boring Depth			

Hole No. WES-2-22C-P2

DRILLING LOG	DIVISION	INSTALLATION	SHEET OF SHEETS
1. PROJECT		10. SIZE AND TYPE OF BIT	
2. LOCATION (Coordinates or Station)		11. DATUM FOR ELEVATION SHOWN (TBM or MSL)	
3. DRILLING AGENCY		12. MANUFACTURER'S DESIGNATION OF DRILL	
4. HOLE NO. (As shown on drawing title and file number)		13. TOTAL NO. OF OVER-BURDEN SAMPLES TAKEN	DISTURBED / UNDISTURBED
5. NAME OF DRILLER		14. TOTAL NUMBER CORE BOXES	
6. DIRECTION OF HOLE ☐ VERTICAL ☐ INCLINED ____ DEG. FROM VERT.		15. ELEVATION GROUND WATER	
		16. DATE HOLE	STARTED / COMPLETED
7. THICKNESS OF OVERBURDEN		17. ELEVATION TOP OF HOLE	
8. DEPTH DRILLED INTO ROCK		18. TOTAL CORE RECOVERY FOR BORING %	
9. TOTAL DEPTH OF HOLE		19. SIGNATURE OF INSPECTOR	

ELEVATION a	DEPTH b	LEGEND c	CLASSIFICATION OF MATERIALS (Description) d	% CORE RECOVERY e	BOX OR SAMPLE NO. f	REMARKS (Drilling time, water loss, depth of weathering, etc., if significant) g
			Well No.: WES-2-22CP2-90			Date well screen was set: ~ 10/17/90
			+2.5			
			0.0' Ground surface			
			Grout mixture			Water level just Prior to setting screen. –
			92.0			
			Bentonite Pellets			4" cement to 72.0'
			95.0			
			Filter Pack			
			100.0			
			Well Screen			
			105.0'			
			~~Trap~~			
			105.0' Boring Depth			

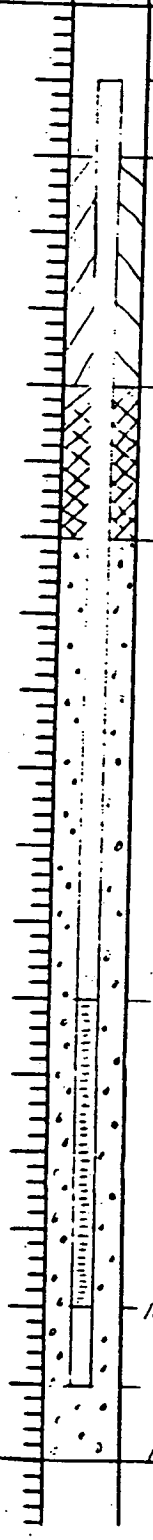

Hole No. WFS-2-22CP3-9C

DRILLING LOG	DIVISION	INSTALLATION	SHEET OF SHEETS

1. PROJECT	10. SIZE AND TYPE OF BIT
2. LOCATION (Coordinates or Station)	11. DATUM FOR ELEVATION SHOWN (TBM or MSL)
3. DRILLING AGENCY	12. MANUFACTURER'S DESIGNATION OF DRILL
4. HOLE NO. (As shown on drawing title and file number)	13. TOTAL NO. OF OVER-BURDEN SAMPLES TAKEN — DISTURBED — UNDISTURBED
5. NAME OF DRILLER	14. TOTAL NUMBER CORE BOXES
6. DIRECTION OF HOLE ☐ VERTICAL ☐ INCLINED ____ DEG. FROM VERT.	15. ELEVATION GROUND WATER
7. THICKNESS OF OVERBURDEN	16. DATE HOLE — STARTED — COMPLETED
8. DEPTH DRILLED INTO ROCK	17. ELEVATION TOP OF HOLE
9. TOTAL DEPTH OF HOLE	18. TOTAL CORE RECOVERY FOR BORING %
	19. SIGNATURE OF INSPECTOR

ELEVATION a	DEPTH b	LEGEND c	CLASSIFICATION OF MATERIALS (Description) d	% CORE RECOVERY e	BOX OR SAMPLE NO. f	REMARKS (Drilling time, water loss, depth of weathering, etc., if significant) g
			Well No: WFS-2-22CP3-9C			Date well screen was set: ~10/18/90
			+2.5			
			0.0 Ground surface			
			Grout mixture			Water level just Prior to setting screen.
			35.0			
			Bentonite Pellets			Set surface casing
			38.0			
			Filter Pack			
			58.6			
			Well Screen			
			68.6			
			~~Trap~~			
			69 Boring Depth			

C210

APPENDIX B

SAMPLE LOG SHEETS AND OTHER FIELD FORMS

B.1 Soil Sample Log Sheets

B.2 Ground Water Sample Log Sheets

B.3 Surface Water Sample Log Sheets

B.4 Sediment Sample Log Sheets

B.5 Chain-of-Custody Records

B.6 Monitoring Well Inspection Sheets

B.7 Monitoring Well Development Records

B.8 Monitoring Well Water Level Measurement Sheets

APPENDIX B.1

SOIL SAMPLE LOG SHEETS

SOIL SAMPLE LOG SHEET

Project Site Name: NSWC Crane, IN
Project No.: CTO 10 job # N7141

[] Surface Soil
[✓] Subsurface Soil
[] Sediment
[] Other:
[] QA Sample Type:

Sample ID No.: 025 B01 07
Sample Location: 025B01
Sampled By: K. HENN / T. ROJAHN
C.O.C. No.: 02391 & 02394

Type of Sample:
[X] Low Concentration
[] High Concentration

GRAB SAMPLE DATA:

	Depth	Color	Description (Sand, Silt, Clay, Moisture, etc.)
Date: 07/25/01 Time: 0831 Method: DPT-macrocore Monitor Reading (ppm): 0	9-11'	H. br to or. brown	Silty v. Fine sand

COMPOSITE SAMPLE DATA:

Date:	Time	Depth	Color	Description (Sand, Silt, Clay, Moisture, etc.)
Method:				
Monitor Readings (Range in ppm):				

SAMPLE COLLECTION INFORMATION:

Analysis	Container Requirements	Collected	Other
APX. IX Total Metals plus Al, Ca, Fe, Mg, Mn, K, Na	(1) 8 oz. Glass	✓	Laucks
Dyes	(1) 8 oz glass	✓	Crane lab
Grain Size & Bulk Density	(1) 8 oz glass		Crane lab
Add: pH, CEC, TOC ~~to 30% of samples~~ (add to metals)		✓	LAUCKS
KWH			

OBSERVATIONS / NOTES:

Duplicate MS/MSD on All metals and dyes

No MS/MSD Duplicate on pH, CEC, TOC

Volume:

3 jars dyes
2 jars metals

MAP:

SEE FIGURE 5-17

Circle if Applicable:

MS/MSD (See above)

Duplicate ID No.: FD07250101

Signature(s):

SOIL SAMPLE LOG SHEET

Project Site Name: NSWC Crane, IN
Project No.: CTO 10 job # N7141

[] Surface Soil
[✓] Subsurface Soil
[] Sediment
[] Other:
[] QA Sample Type:

Sample ID No.: 025B02 0810
Sample Location: 025B02
Sampled By: K. Henn / T. Reigle
C.O.C. No.: 02391 & 02394

Type of Sample:
[X] Low Concentration
[] High Concentration

GRAB SAMPLE DATA:

	Depth	Color	Description (Sand, Silt, Clay, Moisture, etc.)
Date: 7/24/01	KWH ~~7-9'~~ 8-10'	reddish brow	fine ~~to med~~ sand w/ rock flags KWH
Time: 1658			
Method: DPT-microcore			
Monitor Reading (ppm): 0			

COMPOSITE SAMPLE DATA:

Date:	Time	Depth	Color	Description (Sand, Silt, Clay, Moisture, etc.)
Method:				
Monitor Readings (Range in ppm):				

SAMPLE COLLECTION INFORMATION:

Analysis	Container Requirements	Collected	Other
APX. IX Total Metals plus Al, Ca, Fe, Mg, Mn, K, Na	(1) 8 oz. Glass	✓	Laucks
Dyes	(1) 8 oz glass	✓	Crane lab
Grain Size & Bulk Density	(1) 8 oz glass		Crane lab
Add: pH, CEC, TOC ~~to 30% of samples~~ (add to metals) KWH		✓	LAUCKS

OBSERVATIONS / NOTES:

MAP:

SEE FIGURE 5-17

Circle if Applicable:

MS/MSD	Duplicate ID No.:
—	—

Signature(s):

SOIL SAMPLE LOG SHEET

Project Site Name: NSWC Crane, IN
Project No.: CTO 10 job # N7141

[X] Surface Soil
[] Subsurface Soil
[] Sediment
[] Other:
[] QA Sample Type:

Sample ID No.: ~~02503~~ see below
Sample Location: 02SB03
Sampled By: K. Henn / T. Rojah
C.O.C. No.: 02391 & 02394

Type of Sample:
[X] Low Concentration
[] High Concentration

GRAB SAMPLE DATA:

	Depth	Color	Description (Sand, Silt, Clay, Moisture, etc.)
Date: 07/25/01 Time: 0851 Method: DPT-macrocore Monitor Reading (ppm): 0	0-2'	H. br	silty clay, w/ organic matter

COMPOSITE SAMPLE DATA:

Date:	Time	Depth	Color	Description (Sand, Silt, Clay, Moisture, etc.)
Method:				
Monitor Readings (Range in ppm):				

SAMPLE COLLECTION INFORMATION:

Analysis	Container Requirements	Collected	Other
APX. IX Total Metals ~~plus Al, Ca, Fe, Mg, Mn, K, Na~~ KWH	(1) 8 oz. Glass	✓	Laucks
Dyes	(1) 8 oz glass	✓	Crane lab
Grain Size & Bulk Density	(1) 8 oz glass		Crane lab
Add: pH, CEC, TOC to 30% of samples (add to metals)			

OBSERVATIONS / NOTES:

According to FSP:

02SS030001 → metals 0-1' bgs
02SS030002 → dye 0-2' bgs

MAP:

SEE FIGURE 5-17

Circle if Applicable:

MS/MSD	Duplicate ID No.:
—	—

Signature(s):

SOIL SAMPLE LOG SHEET

Project Site Name: NSWC Crane, IN
Project No.: CTO 10 job # N7141

[] Surface Soil
[✓] Subsurface Soil
[] Sediment
[] Other:
[] QA Sample Type:

Sample ID No.: 02SB020709
Sample Location: 02SB03
Sampled By: K. Henn / T. Rojah
C.O.C. No.: 02391 & 02394

Type of Sample:
[X] Low Concentration
[] High Concentration

GRAB SAMPLE DATA:

	Depth	Color	Description (Sand, Silt, Clay, Moisture, etc.)
Date: 07/25/01 Time: 0917 Method: DPT-macrocore Monitor Reading (ppm): 0	7.5-9.5'	yellowish or to lt. gray	Fine Silty Sand MK

COMPOSITE SAMPLE DATA:

Date:	Time	Depth	Color	Description (Sand, Silt, Clay, Moisture, etc.)
Method:				
Monitor Readings (Range in ppm):				

SAMPLE COLLECTION INFORMATION:

Analysis	Container Requirements	Collected	Other
APX. IX Total Metals plus Al, Ca, Fe, Mg, Mn, K, Na	(1) 8 oz. Glass	✓	Laucks
Dyes	(1) 8 oz glass	✓	Crane lab
Grain Size & Bulk Density	(1) 8 oz glass		Crane lab
Add: pH, CEC, TOC ~~to 30% of samples~~ (add to metals)		✓	LAUCKS
KWH			

OBSERVATIONS / NOTES:

MAP:

SEE FIGURE 5-17

Circle if Applicable:

MS/MSD	Duplicate ID No.:
—	—

Signature(s):

SOIL SAMPLE LOG SHEET

Project Site Name: NSWC Crane, IN
Project No.: CTO 10 job # N7141

[X] Surface Soil
[] Subsurface Soil
[] Sediment
[] Other:
[] QA Sample Type:

Sample ID No.: see below
Sample Location: 02SB04
Sampled By: G. Heun / T. Rojahn
C.O.C. No.: 02389 & 02390

Type of Sample:
[X] Low Concentration
[] High Concentration

GRAB SAMPLE DATA:

	Depth	Color	Description (Sand, Silt, Clay, Moisture, etc.)
Date: 07/24/01 Time: 0905 Method: DPT - macro core Monitor Reading (ppm): 0	0-2'	lt. br.	clayey silt

COMPOSITE SAMPLE DATA:

Date:	Time	Depth	Color	Description (Sand, Silt, Clay, Moisture, etc.)
Method:				
Monitor Readings (Range in ppm):				

SAMPLE COLLECTION INFORMATION:

Analysis	Container Requirements	Collected	Other
APX. IX Total Metals ~~plus Al, Ca, Fe, Mg, Mn, K, Na~~	(1) 8 oz. Glass	0001 ✓	Laucks
Dyes	(1) 8 oz glass	0002 ✓	Crane lab
~~Grain Size & Bulk Density~~	(1) 8 oz glass		Crane lab
Add: pH, CEC, TOC to 30% of samples (add to metals) ✓ ✓			
8oz jar			

OBSERVATIONS / NOTES:

According to FSP:

		~~Sample~~ Sample ID No
metals	0-1' bgs	→ (02SB040001) SS
dye	0-2' bgs	→ (02SB040002) SS ↑ KWH

MAP:

SEE FIGURE 5-17

Circle if Applicable:

MS/MSD	Duplicate ID No.:
—	—

Signature(s):

SOIL SAMPLE LOG SHEET

Project Site Name: NSWC Crane, IN
Project No.: CTO 10 job # N7141

[] Surface Soil
[✓] Subsurface Soil
[] Sediment
[] Other:
[] QA Sample Type:

Sample ID No.: 02SB040305
Sample Location: 02SB04
Sampled By: K Hunn / T. Rowan
C.O.C. No.: 02389 & 02390

Type of Sample:
[X] Low Concentration
[] High Concentration

GRAB SAMPLE DATA:

	Depth	Color	Description (Sand, Silt, Clay, Moisture, etc.)
Date: 07/24/01 Time: 0925 Method: DPT-macrocore Monitor Reading (ppm): 0	3-5'	Lt. br.	Silty Clay

925
3-5'

COMPOSITE SAMPLE DATA:

Date:	Time	Depth	Color	Description (Sand, Silt, Clay, Moisture, etc.)
Method:				
Monitor Readings (Range in ppm):				

SAMPLE COLLECTION INFORMATION:

Analysis	Container Requirements	Collected	Other
APX. IX Total Metals ~~plus Al, Ca, Fe, Mg, Mn, K, Na~~ 16oz	(1) 8 oz. Glass	✓	Laucks
Dyes	(1) 8 oz glass	✓	Crane lab
Grain Size & Bulk Density	(1) 8 oz glass		Crane lab
✓ ✓			
Add: pH, CEC, TOC to 30% of samples (add to metals)			
8oz jar			

OBSERVATIONS / NOTES:

MAP:

SEE FIGURE 5-17

Circle if Applicable:

MS/MSD	Duplicate ID No.:
—	—

Signature(s): Kenneth W. Hunn / T. Rowan

SOIL SAMPLE LOG SHEET

Project Site Name: NSWC Crane, IN
Project No.: CTO 10 job # N7141

[✓] Surface Soil
[ ] Subsurface Soil
[ ] Sediment
[ ] Other:
[ ] QA Sample Type:

Sample ID No.: see below
Sample Location: 02 SB05
Sampled By: KHONN/T. ROJAHN
C.O.C. No.: 02389 & 02390

Type of Sample:
[X] Low Concentration
[ ] High Concentration

GRAB SAMPLE DATA:

	Depth	Color	Description (Sand, Silt, Clay, Moisture, etc.)
Date: 07/24/01 Time: 0950 Method: APT-macro core Monitor Reading (ppm):	0-2'	Lt. br	clayey silt

COMPOSITE SAMPLE DATA:

Date:	Time	Depth	Color	Description (Sand, Silt, Clay, Moisture, etc.)
Method:				
Monitor Readings (Range in ppm):				

SAMPLE COLLECTION INFORMATION:

Analysis	Container Requirements	Collected	Other
APX. IX Total Metals ~~plus Al, Ca, Fe, Mg, Mn, K, Na~~ ISWH	(1) 8 oz. Glass	✓	Laucks
Dyes	(1) 8 oz glass	✓	Crane lab
Grain Size & Bulk Density	(1) 8 oz glass		Crane lab
Add: pH, CEC, TOC to 30% of samples (add to metals)			

OBSERVATIONS / NOTES:

According to FSP: Sample ID No.
metals 0-1' bgs → 02 ~~SB~~ SS 05 0001
dye 0-2' bgs → 02 ~~SB~~ SS 05 0002
↑ ISWH

MAP:

SEE FIGURE 5-17

Circle if Applicable:

MS/MSD	Duplicate ID No.:
—	—

Signature(s):

SOIL SAMPLE LOG SHEET

Project Site Name: NSWC Crane, IN
Project No.: CTO 10 job # N7141

[] Surface Soil
[✓] Subsurface Soil
[] Sediment
[] Other:
[] QA Sample Type:

Sample ID No.: 02SB050809
Sample Location: 02SB05
Sampled By: K. Hunn / T. Rojahn
C.O.C. No.: 02389 & 02390

Type of Sample:
[X] Low Concentration
[] High Concentration

GRAB SAMPLE DATA:

	Depth	Color	Description (Sand, Silt, Clay, Moisture, etc.)
Date: 07/24/01 Time: 1036 Method: DPT - MACRO CORE Monitor Reading (ppm):	8.0-8.8'	Lt. Gr.	FINE SAND

COMPOSITE SAMPLE DATA:

Date:	Time	Depth	Color	Description (Sand, Silt, Clay, Moisture, etc.)
Method:				
Monitor Readings (Range in ppm):				

SAMPLE COLLECTION INFORMATION:

Analysis	Container Requirements	Collected	Other
APX. IX Total Metals ~~plus Al, Ca, Fe, Mg, Mn, K, Na~~ EWH	(1) 8 oz. Glass	✓	Laucks
Dyes	(1) 8 oz glass	✓	Crane lab
Grain Size & Bulk Density	(1) 8 oz glass		Crane lab
Add: pH, CEC, TOC to 30% of samples (add to metals)			

OBSERVATIONS / NOTES:

Sample depth from 8-8.8FT

MAP:

SEE FIGURE 5-17

Circle if Applicable:

MS/MSD	Duplicate ID No.:
—	—

Signature(s):

SOIL SAMPLE LOG SHEET

Project Site Name: NSWC Crane, IN
Project No.: CTO 10 job # N7141

[] Surface Soil
[✓] Subsurface Soil
[] Sediment
[] Other:
[] QA Sample Type:

Sample ID No.: 025B060709
Sample Location: 025806
Sampled By: K. Henn / TR
C.O.C. No.: 02391 & 02394

Type of Sample:
[X] Low Concentration
[] High Concentration

GRAB SAMPLE DATA:

	Depth	Color	Description (Sand, Silt, Clay, Moisture, etc.)
Date: 7/24/01 Time: 1621 Method: DPT-MACro-core Monitor Reading (ppm): 0	7-9	lt. gray w/ orange stain.	Silty sand

COMPOSITE SAMPLE DATA:

	Time	Depth	Color	Description (Sand, Silt, Clay, Moisture, etc.)
Date:				
Method:				
Monitor Readings (Range in ppm):				

SAMPLE COLLECTION INFORMATION:

Analysis	Container Requirements	Collected	Other
APX. IX Total Metals plus Al, Ca, Fe, Mg, Mn, K, Na	(1) 8 oz. Glass	✓	Laucks
Dyes	(1) 8 oz glass	✓	Crane lab
Grain Size & Bulk Density	(1) 8 oz glass		Crane lab
Add: pH, CEC, TOC ~~to 30% of samples~~ (add to metals)		✓	LAUCKS
ISWH			

OBSERVATIONS / NOTES:

MAP:

SEE FIGURE 5-17

Circle If Applicable:

MS/MSD	Duplicate ID No.:
—	—

Signature(s): [signature]

SOIL SAMPLE LOG SHEET

025B070709
KWH

Project Site Name: NSWC Crane, IN
Project No.: CTO 10 job # N7141

[] Surface Soil
[✓] Subsurface Soil
[] Sediment
[] Other:
[] QA Sample Type:

Sample ID No.: ~~025B070810~~
Sample Location: 02 5B 07
Sampled By: K. Hewn / T. Rogers
C.O.C. No.: 02389 & 02390

Type of Sample:
[X] Low Concentration
[] High Concentration

GRAB SAMPLE DATA:

	Depth	Color	Description (Sand, Silt, Clay, Moisture, etc.)
Date: 07/24/01	7-9 ~~8-9~~ KWH	Lt. gray	Fine Silty Sand
Time: 1455			
Method: DPT - macro-core			
Monitor Reading (ppm):			

COMPOSITE SAMPLE DATA:

Date:	Time	Depth	Color	Description (Sand, Silt, Clay, Moisture, etc.)
Method:				
Monitor Readings (Range in ppm):				

SAMPLE COLLECTION INFORMATION:

Analysis	Container Requirements	Collected	Other
APX. IX Total Metals plus Al, Ca, Fe, Mg, Mn, K, Na	(1) 8 oz. Glass	✓	Laucks
Dyes	(1) 8 oz glass	✓	Crane lab
Grain Size & Bulk Density	(1) 8 oz glass		Crane lab
Add: pH, CEC, TOC ~~to 30% of samples~~ (add to metals)		✓	LAUCKS
KWH			

OBSERVATIONS / NOTES:

MAP:

SEE FIGURE 5-17

Circle if Applicable:

MS/MSD	Duplicate ID No.:
—	—

Signature(s):

SOIL SAMPLE LOG SHEET

Project Site Name: NSWC Crane, IN
Project No.: CTO 10 job # N7141

[✓] Surface Soil
[] Subsurface Soil
[] Sediment
[] Other:
[] QA Sample Type:

Sample ID No.: see below
Sample Location: 02SB08
Sampled By: K. Henn / T. Bejahn
C.O.C. No.: 02389 & 02390

Type of Sample:
[X] Low Concentration
[] High Concentration

GRAB SAMPLE DATA:

	Depth	Color	Description (Sand, Silt, Clay, Moisture, etc.)
Date: 07/24/01 Time: 1058 Method: DPT-macrocore Monitor Reading (ppm): 0	0-2'	lt. brown	clayey silt

COMPOSITE SAMPLE DATA:

Date:	Time	Depth	Color	Description (Sand, Silt, Clay, Moisture, etc.)
Method:				
Monitor Readings (Range in ppm):				

SAMPLE COLLECTION INFORMATION:

Analysis	Container Requirements	Collected	Other
APX. IX Total Metals ~~plus Al, Ca, Fe, Mg, Mn, K, Na~~ KWH	(1) 8 oz. Glass	✓	Laucks
Dyes	(1) 8 oz glass	✓	Crane lab
Grain Size & Bulk Density	(1) 8 oz glass		Crane lab
Add: pH, CEC, TOC to 30% of samples (add to metals)			

OBSERVATIONS / NOTES:

According to FSP — Sample ID No.
metals 0-1' bgs → 02 ~~SB~~SS 080001
dye 0-2' bgs → 02 ~~SB~~SS 080002
KWH

MAP:

SEE FIGURE 5-17

Circle if Applicable:

MS/MSD	Duplicate ID No.:
—	—

Signature(s):

SOIL SAMPLE LOG SHEET

Project Site Name: NSWC Crane, IN
Project No.: CTO 10 job # N7141

[] Surface Soil
[✓] Subsurface Soil
[] Sediment
[] Other:
[] QA Sample Type:

Sample ID No.: 02SB0808 10
Sample Location: 02SB08
Sampled By: K. Hewn / T. Rajahn
C.O.C. No.: 02389 & 02390

Type of Sample:
[X] Low Concentration
[] High Concentration

GRAB SAMPLE DATA:

	Depth	Color	Description (Sand, Silt, Clay, Moisture, etc.)
Date: ~~7/0~~ 07/24/01 Time: 1115 Method: DPT - microcore Monitor Reading (ppm): 0	8-10'	H. gray	Fine sand

COMPOSITE SAMPLE DATA:

Date:	Time	Depth	Color	Description (Sand, Silt, Clay, Moisture, etc.)
Method:				
Monitor Readings (Range in ppm):				

SAMPLE COLLECTION INFORMATION:

Analysis	Container Requirements	Collected	Other
APX. IX Total Metals ~~plus Al, Ca, Fe, Mg, Mn, K, Na~~ 13WH	(1) 8 oz. Glass	✓	Laucks
Dyes	(1) 8 oz glass	✓	Crane lab
Grain Size & Bulk Density	(1) 8 oz glass		Crane lab
Add: pH, CEC, TOC to 30% of samples (add to metals)			

OBSERVATIONS / NOTES:

MAP:

SEE FIGURE 5-17

Circle if Applicable:

MS/MSD	Duplicate ID No.:
—	—

Signature(s): [illegible]

SOIL SAMPLE LOG SHEET

Project Site Name: NSWC Crane, IN
Project No.: CTO 10 job # N7141

[✓] Surface Soil
[ ] Subsurface Soil
[ ] Sediment
[ ] Other:
[ ] QA Sample Type:

Sample ID No.: see below
Sample Location: 025009
Sampled By: K. Henn / T. Rogers
C.O.C. No.: 02389 E 02390

Type of Sample:
[X] Low Concentration
[ ] High Concentration

GRAB SAMPLE DATA:

	Depth	Color	Description (Sand, Silt, Clay, Moisture, etc.)
Date: 07/24/01 Time: 1315 Method: DPT-macrocore Monitor Reading (ppm):	0-2'	br.	organic silt + clayey silt

COMPOSITE SAMPLE DATA:

	Time	Depth	Color	Description (Sand, Silt, Clay, Moisture, etc.)
Date:				
Method:				
Monitor Readings (Range in ppm):				

SAMPLE COLLECTION INFORMATION:

Analysis	Container Requirements	Collected	Other
APX. IX Total Metals ~~plus Al, Ca, Fe, Mg, Mn, K, Na~~ KWH	(1) 8 oz. Glass	✓	Laucks
Dyes	(1) 8 oz glass	✓	Crane lab
Grain Size & Bulk Density	(1) 8 oz glass		Crane lab
Add: pH, CEC, TOC to 30% of samples (add to metals)			

OBSERVATIONS / NOTES:

According to FSP — Sample ID No.
metals 0-1' bgs → 0255090001
dye 0-2' bgs → 0255090002

MAP:

SEE FIGURE 5-17

Circle if Applicable:

MS/MSD	Duplicate ID No.:
—	—

Signature(s): Heather A. [illegible] T. Rogers

SOIL SAMPLE LOG SHEET

Project Site Name: NSWC Crane, IN
Project No.: CTO 10 job # N7141

[] Surface Soil
[✓] Subsurface Soil
[] Sediment
[] Other:
[] QA Sample Type:

Sample ID No.: 025B09 0709
Sample Location: 025B09
Sampled By: K. Hunn / T. Roach
C.O.C. No.: 02389 & 02390

Type of Sample:
[X] Low Concentration
[] High Concentration

GRAB SAMPLE DATA:

	Depth	Color	Description (Sand, Silt, Clay, Moisture, etc.)
Date: 7/10 KWH 7/10/01	7-9'	lt. brown to lt. gray	Fine ~~to med~~ sand KH
Time: 1335			
Method: DPT - microcore			
Monitor Reading (ppm):			

COMPOSITE SAMPLE DATA:

Date:	Time	Depth	Color	Description (Sand, Silt, Clay, Moisture, etc.)
Method:				
Monitor Readings (Range in ppm):				

SAMPLE COLLECTION INFORMATION:

Analysis	Container Requirements	Collected	Other
APX. IX Total Metals ~~plus Al, Ca, Fe, Mg, Mn, K, Na~~ KWH	(1) 8 oz. Glass	✓	Laucks
Dyes	(1) 8 oz glass	✓	Crane lab
Grain Size & Bulk Density	(1) 8 oz glass		Crane lab
Add: pH, CEC, TOC to 30% of samples (add to metals)			

OBSERVATIONS / NOTES:

MAP:

SEE FIGURE 5-17

Circle If Applicable:

MS/MSD	Duplicate ID No.:
—	—

Signature(s): [signature]

SOIL SAMPLE LOG SHEET

Project Site Name: NSWC Crane, IN
Project No.: CTO 10 job # N7141

[X] Surface Soil
[] Subsurface Soil
[] Sediment
[] Other:
[] QA Sample Type:

Sample ID No.: See below
Sample Location: 02SB10
Sampled By: K. Hurd / T. Reid
C.O.C. No.: 02389 & 02390

Type of Sample:
[X] Low Concentration
[] High Concentration

GRAB SAMPLE DATA:

	Depth	Color	Description (Sand, Silt, Clay, Moisture, etc.)
Date: 7/24/01 Time: 1345 Method: DPT - macro core Monitor Reading (ppm):	0-2'	br.	organic silt & clayey silt

COMPOSITE SAMPLE DATA:

	Time	Depth	Color	Description (Sand, Silt, Clay, Moisture, etc.)
Date:				
Method:				
Monitor Readings (Range in ppm):				

SAMPLE COLLECTION INFORMATION:

Analysis	Container Requirements	Collected	Other
APX. IX Total Metals ~~plus Al, Ca, Fe, Mg, Mn, K, Na~~ KWH	(1) 8 oz. Glass	✓	Laucks
Dyes	(1) 8 oz glass	✓	Crane lab
Grain Size & Bulk Density	(1) 8 oz glass		Crane lab
Add: pH, CEC, TOC to 30% of samples (add to metals)			

OBSERVATIONS / NOTES:

According to FSP

			Sample ID No.	
metals	0-1' bgs	→	025510 0001	metals
dye	0-2' bgs	→	025510 0002	dye

MAP:

SEE FIGURE 5-17

Circle if Applicable:

MS/MSD	Duplicate ID No.:
—	—

Signature(s):

SOIL SAMPLE LOG SHEET

Project Site Name: NSWC Crane, IN
Project No.: CTO 10 job # N7141

[] Surface Soil
[✓] Subsurface Soil
[] Sediment
[] Other:
[] QA Sample Type:

Sample ID No.: 02SB100810
Sample Location: 02SB10
Sampled By: K. Hunt / T. Rojahn
C.O.C. No.: 02389 & 02390

Type of Sample:
[X] Low Concentration
[] High Concentration

GRAB SAMPLE DATA:

	Depth	Color	Description (Sand, Silt, Clay, Moisture, etc.)
Date: 07/24/01 Time: 1417 Method: DPT-MACRO-CORE Monitor Reading (ppm):	8.0-9.5	lt. gray	Fine sand and silt

COMPOSITE SAMPLE DATA:

Date:	Time	Depth	Color	Description (Sand, Silt, Clay, Moisture, etc.)
Method:				
Monitor Readings (Range in ppm):				

SAMPLE COLLECTION INFORMATION:

Analysis	Container Requirements	Collected	Other
APX. IX Total Metals plus Al, Ca, Fe, Mg, Mn, K, Na	(1) 8 oz. Glass	✓	Laucks
Dyes	(1) 8 oz glass	✓	Crane lab
Grain Size & Bulk Density	(1) 8 oz glass		Crane lab
Add: pH, CEC, TOC ~~to 30% of samples~~ (add to metals)		✓	LAUCKS
ISWA			

OBSERVATIONS / NOTES:

MAP:

SEE FIGURE 5-17

Circle if Applicable:

MS/MSD	Duplicate ID No.:
—	—

Signature(s):

SOIL SAMPLE LOG SHEET

Project Site Name: NSWC Crane, IN
Project No.: CTO 10 job # N7141

[✓] Surface Soil
[] Subsurface Soil
[] Sediment
[] Other:
[] QA Sample Type:

Sample ID No.: See below
Sample Location: 025BU
Sampled By: K. Hess / T. Boykin
C.O.C. No.: 02391 & 02390

Type of Sample:
[X] Low Concentration
[] High Concentration

GRAB SAMPLE DATA:

	Depth	Color	Description (Sand, Silt, Clay, Moisture, etc.)
Date: 7/24/01 Time: 1513 Method: DPT - Macrocore Monitor Reading (ppm): 0	0-2	br. to lt. br	clayey silt / organic silt

COMPOSITE SAMPLE DATA:

	Time	Depth	Color	Description (Sand, Silt, Clay, Moisture, etc.)
Date:				
Method:				
Monitor Readings (Range in ppm):				

SAMPLE COLLECTION INFORMATION:

Analysis	Container Requirements	Collected	Other
APX. IX Total Metals ~~plus Al, Ca, Fe, Mg, Mn, K, Na~~ GWH	(1) 8 oz. Glass	✓	Laucks
Dyes	(1) 8 oz glass	✓	Crane lab
Grain Size & Bulk Density	(1) 8 oz glass		Crane lab
Add: pH, CEC, TOC to 30% of samples (add to metals)			

OBSERVATIONS / NOTES:

According to FSP Sample ID No.
metals 0-1' bgs → 0255110001
dyes 0-3' bgs → 0255110002

MAP:

SEE FIGURE 5-17

Circle if Applicable:

MS/MSD	Duplicate ID No.:	Both:
—	FD072401 01	0255110001 0255110002

Signature(s):

SOIL SAMPLE LOG SHEET

Project Site Name: NSWC Crane, IN
Project No.: CTO 10 job # N7141

[] Surface Soil
[X] Subsurface Soil
[] Sediment
[] Other:
[] QA Sample Type:

Sample ID No.: 02SB110406
Sample Location: 02SBN
Sampled By: R. Hewn / T. Roitt
C.O.C. No.: 02391 & 02390

Type of Sample:
[X] Low Concentration
[] High Concentration

GRAB SAMPLE DATA:

	Depth	Color	Description (Sand, Silt, Clay, Moisture, etc.)
Date: 7/24/01 Time: 1529 Method: OPT-micro-cor Monitor Reading (ppm):	4-6'	yellow orange to H. brown	clayey sand and silty sand w/ rock frags

COMPOSITE SAMPLE DATA:

	Time	Depth	Color	Description (Sand, Silt, Clay, Moisture, etc.)
Date:				
Method:				
Monitor Readings (Range in ppm):				

SAMPLE COLLECTION INFORMATION:

Analysis	Container Requirements	Collected	Other
APX. IX Total Metals ~~plus Al, Ca, Fe, Mg, Mn, K, Na~~ KWH	(1) 8 oz. Glass	✓	Laucks
Dyes	(1) 8 oz glass	✓	Crane lab
Grain Size & Bulk Density	(1) 8 oz glass		Crane lab
Add: pH, CEC, TOC to 30% of samples (add to metals)			

OBSERVATIONS / NOTES:

MAP:

SEE FIGURE 5-17

Circle if Applicable:

MS/MSD	Duplicate ID No.:
—	—

Signature(s): [illegible] Tony Roitt

SOIL SAMPLE LOG SHEET

Project Site Name: NSWC Crane, IN
Project No.: CTO 10 job # N7141

[] Surface Soil
[✓] Subsurface Soil
[] Sediment
[] Other:
[] QA Sample Type:

Sample ID No.: 02SB12-12
Sample Location: 02SB07
Sampled By: K. Henn / T. Rojah
C.O.C. No.: 02394 & 02395

Type of Sample:
[X] Low Concentration
[] High Concentration

GRAB SAMPLE DATA:

	Depth	Color	Description (Sand, Silt, Clay, Moisture, etc.)
Date: 07/25/01 Time: 1359 Method: DPT-macrocore Monitor Reading (ppm):	5-7'	lt. br to dk. brown	clayey silt trace sand

COMPOSITE SAMPLE DATA:

Date:	Time	Depth	Color	Description (Sand, Silt, Clay, Moisture, etc.)
Method:				
Monitor Readings (Range in ppm):				

SAMPLE COLLECTION INFORMATION:

Analysis	Container Requirements	Collected	Other
APX. IX Total Metals plus Al, Ca, Fe, Mg, Mn, K, Na	(1) 8 oz. Glass	✓	Laucks
Dyes	(1) 8 oz glass	✓	Crane lab
Grain Size & Bulk Density	(1) 8 oz glass		Crane lab
Add: pH, CEC, TOC ~~to 30% of samples~~ (add to metals)		✓	LAUCKS
KH			

OBSERVATIONS / NOTES:

MAP:

SEE FIGURE 5-17

Circle if Applicable:

MS/MSD	Duplicate ID No.:
—	—

Signature(s):

SOIL SAMPLE LOG SHEET

Project Site Name: NSWC Crane, IN
Project No.: CTO 10 job # N7141

[] Surface Soil
[✓] Subsurface Soil
[] Sediment
[] Other:
[] QA Sample Type:

Sample ID No.: 02SB130507
Sample Location: 02SB13
Sampled By: K. Henn / T. Rojah
C.O.C. No.: 02394 & 02395

Type of Sample:
[X] Low Concentration
[] High Concentration

GRAB SAMPLE DATA:

	Depth	Color	Description (Sand, Silt, Clay, Moisture, etc.)
Date: 07/25/01 Time: 1329 Method: DPT-macrocore Monitor Reading (ppm): 0	~~5.0-6.5'~~ 5.5 to 7.0'	lt. br. to yellow br	Silty clay some sand

COMPOSITE SAMPLE DATA:

	Time	Depth	Color	Description (Sand, Silt, Clay, Moisture, etc.)
Date:				
Method:				
Monitor Readings (Range in ppm):				

SAMPLE COLLECTION INFORMATION:

Analysis	Container Requirements	Collected	Other
APX. IX Total Metals plus Al, Ca, Fe, Mg, Mn, K, Na	(1) 8 oz. Glass	✓	Laucks
Dyes	(1) 8 oz glass	✓	Crane lab
Grain Size & Bulk Density	(1) 8 oz glass		Crane lab
Add: pH, CEC, TOC ~~to 30% of samples~~ (add to metals)		✓	LAUCKS
KH			

OBSERVATIONS / NOTES:

MAP:

SEE FIGURE 5-17

Circle if Applicable:

MS/MSD	Duplicate ID No.:
—	—

Signature(s): Keith W. H. [illegible]

SOIL SAMPLE LOG SHEET

Project Site Name: NSWC Crane, IN
Project No.: CTO 10 job # N7141

[] Surface Soil
[✓] Subsurface Soil
[] Sediment
[] Other:
[] QA Sample Type:

Sample ID No.: 0258140709 ~~02SB14~~
Sample Location: 02SB14
Sampled By: K. Henn / T. Rojahn
C.O.C. No.: 02391 & 02394

Type of Sample:
[X] Low Concentration
[] High Concentration

GRAB SAMPLE DATA:

	Depth	Color	Description (Sand, Silt, Clay, Moisture, etc.)
Date: 07/25/01 Time: 1002 Method: DPT-microcore Monitor Reading (ppm): 0	7.4-9.4	H. gray w/ yel-or mottles	Silty v. Fine sand

COMPOSITE SAMPLE DATA:

	Time	Depth	Color	Description (Sand, Silt, Clay, Moisture, etc.)
Date:				
Method:				
Monitor Readings (Range in ppm):				

SAMPLE COLLECTION INFORMATION:

Analysis	Container Requirements	Collected	Other
APX. IX Total Metals plus Al, Ca, Fe, Mg, Mn, K, Na	(1) 8 oz. Glass	✓	Laucks
Dyes	(1) 8 oz glass	✓	Crane lab
Grain Size & Bulk Density	(1) 8 oz glass		Crane lab
Add: pH, CEC, TOC ~~to 30% of samples~~ (add to metals)		✓	LAUCKS
KWH			

OBSERVATIONS / NOTES:

MAP:

SEE FIGURE 5-17

Circle if Applicable:

MS/MSD	Duplicate ID No.:
—	—

Signature(s):

SOIL SAMPLE LOG SHEET

Project Site Name: NSWC Crane, IN
Project No.: CTO 10 job # N7141

[] Surface Soil
[] Subsurface Soil
[] Sediment
[] Other:
[] QA Sample Type:

Sample ID No.: 0255 see below
Sample Location: 025B15
Sampled By: K. Henn / T. Rojsh
C.O.C. No.: 02395 & 02394

Type of Sample:
[X] Low Concentration
[] High Concentration

GRAB SAMPLE DATA:

	Depth	Color	Description (Sand, Silt, Clay, Moisture, etc.)
Date: 07/25/01 Time: 1406 Method: DPT-macrocore Monitor Reading (ppm):	0-2'	lt. br.	clayey silt

COMPOSITE SAMPLE DATA:

Date:	Time	Depth	Color	Description (Sand, Silt, Clay, Moisture, etc.)
Method:				
Monitor Readings (Range in ppm):				

SAMPLE COLLECTION INFORMATION:

Analysis	Container Requirements	Collected	Other
APX. IX Total Metals ~~plus Al, Ca, Fe, Mg, Mn, K, Na~~ 15W/H	(1) 8 oz. Glass	✓	Laucks
Dyes	(1) 8 oz glass	✓	Crane lab
Grain Size & Bulk Density	(1) 8 oz glass		Crane lab
Add: pH, CEC, TOC to 30% of samples (add to metals)			

OBSERVATIONS / NOTES:

According to FSP:
025515 0001 → 0-1' metals
025515 0002 → 0-2' dyes

MAP:

SEE FIGURE 5-17

Circle if Applicable:

MS/MSD	Duplicate ID No.:
—	—

Signature(s):

SOIL SAMPLE LOG SHEET

Project Site Name: NSWC Crane, IN
Project No.: CTO 10 job # N7141

[] Surface Soil
[] Subsurface Soil
[] Sediment
[] Other:
[] QA Sample Type:

Sample ID No.: 02SB150608
Sample Location: 02SB15
Sampled By: K. Henn / T. Rojah
C.O.C. No.: 02394 & 02395

Type of Sample:
[X] Low Concentration
[] High Concentration

GRAB SAMPLE DATA:

	Depth	Color	Description (Sand, Silt, Clay, Moisture, etc.)
Date: 07/25/01 Time: 1419 Method: DPT-microcore Monitor Reading (ppm):	6-8'	lt. br. to yellow brown	clayey silt

COMPOSITE SAMPLE DATA:

Date:	Time	Depth	Color	Description (Sand, Silt, Clay, Moisture, etc.)
Method:				
Monitor Readings (Range in ppm):				

SAMPLE COLLECTION INFORMATION:

Analysis	Container Requirements	Collected	Other
APX. IX Total Metals plus Al, Ca, Fe, Mg, Mn, K, Na	(1) 8 oz. Glass	✓	Laucks
Dyes	(1) 8 oz glass	✓	Crane lab
Grain Size & Bulk Density	(1) 8 oz glass		Crane lab
Add: pH, CEC, TOC ~~to 30% of samples~~ (add to metals)		✓	LAUCKS
KUH			

OBSERVATIONS / NOTES:

MAP:

SEE FIGURE 5-17

Circle if Applicable:

MS/MSD	Duplicate ID No.:
—	—

Signature(s):

SOIL SAMPLE LOG SHEET

Project Site Name: NSWC Crane, IN
Project No.: CTO 10 job # N7141

[✓] Surface Soil
[] Subsurface Soil
[] Sediment
[] Other:
[] QA Sample Type:

Sample ID No.: 0255 See below
Sample Location: 02 SB 16
Sampled By: K. Henn / T. Rojah
C.O.C. No.: 02391 & 02394

Type of Sample:
[X] Low Concentration
[] High Concentration

GRAB SAMPLE DATA:

	Depth	Color	Description (Sand, Silt, Clay, Moisture, etc.)
Date: 07/25/01 Time: 1101 Method: DPT-macrocore Monitor Reading (ppm): 0.5	0-2'	lt. brown to yel-or brown	clayey S.Cl

COMPOSITE SAMPLE DATA:

Date:	Time	Depth	Color	Description (Sand, Silt, Clay, Moisture, etc.)
Method:				
Monitor Readings (Range in ppm):				

SAMPLE COLLECTION INFORMATION:

Analysis	Container Requirements	Collected	Other
APX. IX Total Metals ~~plus Al, Ca, Fe, Mg, Mn, K, Na~~ KH	(1) 8 oz. Glass	✓	Laucks
Dyes	(1) 8 oz glass	✓	Crane lab
Grain Size & Bulk Density	(1) 8 oz glass		Crane lab
Add: pH, CEC, TOC to 30% of samples (add to metals)			

OBSERVATIONS / NOTES:

According to FSP:

0255 16 0001 → 0-1' bgs
0255 16 0002 → 0.2' bgs

MAP:

SEE FIGURE 5-17

Circle if Applicable:

MS/MSD	Duplicate ID No.:
—	—

Signature(s):

SOIL SAMPLE LOG SHEET

Project Site Name: NSWC Crane, IN
Project No.: CTO 10 job # N7141

[] Surface Soil
[✓] Subsurface Soil
[] Sediment
[] Other:
[] QA Sample Type:

Sample ID No.: 02SB060507
Sample Location: 02SB16
Sampled By: K. Henn / T. Rojah
C.O.C. No.: 02391 E 02394

Type of Sample:
[X] Low Concentration
[] High Concentration

GRAB SAMPLE DATA:

	Depth	Color	Description (Sand, Silt, Clay, Moisture, etc.)
Date: 07/05/01 Time: 1117 Method: DPT-macrocore Monitor Reading (ppm):	5-7'	H. br to dr. brown	Silty Fine Sand

COMPOSITE SAMPLE DATA:

Date:	Time	Depth	Color	Description (Sand, Silt, Clay, Moisture, etc.)
Method:				
Monitor Readings (Range in ppm):				

SAMPLE COLLECTION INFORMATION:

Analysis	Container Requirements	Collected	Other
APX. IX Total Metals ~~plus Al, Ca, Fe, Mg, Mn, K, Na~~ KWH	(1) 8 oz. Glass	✓	Laucks
Dyes	(1) 8 oz glass	✓	Crane lab
Grain Size & Bulk Density	(1) 8 oz glass		Crane lab
Add: pH, CEC, TOC ~~to 80% of samples~~ (add to metals)			
KWH			

OBSERVATIONS / NOTES:

MAP:

SEE FIGURE 5-17

Circle If Applicable:

MS/MSD	Duplicate ID No.:
—	—

Signature(s):

SOIL SAMPLE LOG SHEET

Project Site Name: NSWC Crane, IN
Project No.: CTO 10 job # N7141

[X] Surface Soil
[] Subsurface Soil
[] Sediment
[] Other:
[] QA Sample Type:

Sample ID No.: 0255 see below
Sample Location: 025B17
Sampled By: K. Henn / T. Rojah
C.O.C. No.: 02394 & 02395

Type of Sample:
[X] Low Concentration
[] High Concentration

GRAB SAMPLE DATA:

	Depth	Color	Description (Sand, Silt, Clay, Moisture, etc.)
Date: 07/25/01 Time: 1022 Method: DPT-microcore Monitor Reading (ppm): 0	0-2'	lt. brown	clayey silt, some sand

COMPOSITE SAMPLE DATA:

Date:	Time	Depth	Color	Description (Sand, Silt, Clay, Moisture, etc.)
Method:				
Monitor Readings (Range in ppm):				

SAMPLE COLLECTION INFORMATION:

Analysis	Container Requirements	Collected	Other
APX. IX Total Metals ~~plus Al, Ca, Fe, Mg, Mn, K, Na~~ KSWH	(1) 8 oz. Glass	✓	Laucks
Dyes	(1) 8 oz glass	✓	Crane lab
Grain Size & Bulk Density	(1) 8 oz glass		Crane lab
Add: pH, CEC, TOC to 30% of samples (add to metals)			

OBSERVATIONS / NOTES:

According to FSP

025517 0001 → 0-1' bgs metals
025517 0002 → 0-2' bgs dyes.

MAP:

SEE FIGURE 5-17

Circle If Applicable:

MS/MSD	Duplicate ID No.:
—	—

Signature(s): Keith W. [illegible]

SOIL SAMPLE LOG SHEET

025B170608

Page 1 of 1

Project Site Name: NSWC Crane, IN
Project No.: CTO 10 job # N7141

[X] Surface Soil KWH
[X] Subsurface Soil
[ ] Sediment
[ ] Other:
[ ] QA Sample Type:

Sample ID No.: 025B170608 (KWH)
Sample Location: ~~025B14~~ 025B17
Sampled By: K. Henn / T. Rojahn
C.O.C. No.: 02394 & 02395

Type of Sample:
[X] Low Concentration
[ ] High Concentration

GRAB SAMPLE DATA:

	Depth	Color	Description (Sand, Silt, Clay, Moisture, etc.)
Date: 07/25/01 Time: 1034 Method: DPT-microcore Monitor Reading (ppm): 0	6-8'	Yellow or to or. brown	Silty Fine Sand

COMPOSITE SAMPLE DATA:

Date:	Time	Depth	Color	Description (Sand, Silt, Clay, Moisture, etc.)
Method:				
Monitor Readings (Range in ppm):				

SAMPLE COLLECTION INFORMATION:

Analysis	Container Requirements	Collected	Other
APX. IX Total Metals ~~plus Al, Ca, Fe, Mg, Mn, K, Na~~ KWH	(1) 8 oz. Glass	✓	Laucks
Dyes	(1) 8 oz glass	✓	Crane lab
Grain Size & Bulk Density	(1) 8 oz glass		Crane lab
Add: pH, CEC, TOC to 30% of samples (add to metals)			

OBSERVATIONS / NOTES:

MAP:

SEE FIGURE 5-17

Circle if Applicable:

MS/MSD	Duplicate ID No.:
—	—

Signature(s): Keith W. Henn, Tony Rojahn

SOIL SAMPLE LOG SHEET

Project Site Name: NSWC Crane, IN
Project No.: CTO 10 job # N7141

[✓] Surface Soil
[] Subsurface Soil
[] Sediment
[] Other:
[] QA Sample Type:

Sample ID No.: 0255 See below
Sample Location: 025B10
Sampled By: K. Henn / T. Rojah
C.O.C. No.: 02396 & 02397

Type of Sample:
[X] Low Concentration
[] High Concentration

GRAB SAMPLE DATA:

	Depth	Color	Description (Sand, Silt, Clay, Moisture, etc.)
Date: 07/25/01 Time: 1540 Method: DPT-microcore Monitor Reading (ppm): 0	0-2'	H. brown	silty clay

COMPOSITE SAMPLE DATA:

Date:	Time	Depth	Color	Description (Sand, Silt, Clay, Moisture, etc.)
Method:				
Monitor Readings (Range in ppm):				

SAMPLE COLLECTION INFORMATION:

Analysis	Container Requirements	Collected	Other
APX. IX Total Metals ~~plus Al, Ca, Fe, Mg, Mn, K, Na~~ KH	(1) 8 oz. Glass	✓	Laucks
Dyes	(1) 8 oz glass	✓	Crane lab
Grain Size & Bulk Density	(1) 8 oz glass		Crane lab
Add: pH, CEC, TOC to 30% of samples (add to metals)			

OBSERVATIONS / NOTES:

According to FSP

0255180001 0-1' bgs metals
0255180002 0-2' bgs dye

MAP:

SEE FIGURE 5-17

Circle If Applicable:

MS/MSD	Duplicate ID No.:
—	FD07250103

Signature(s):

SOIL SAMPLE LOG SHEET

Project Site Name: NSWC Crane, IN
Project No.: CTO 10 job # N7141

[] Surface Soil
[✓] Subsurface Soil
[] Sediment
[] Other:
[] QA Sample Type:

Sample ID No.: 0258180507
Sample Location: 02 SB18
Sampled By: K. Henn / T. Rojah
C.O.C. No.: 02396 & 02397

Type of Sample:
[X] Low Concentration
[] High Concentration

GRAB SAMPLE DATA:

	Depth	Color	Description (Sand, Silt, Clay, Moisture, etc.)
Date: 07/25/01 Time: 1607 Method: DPT-macrocore Monitor Reading (ppm): 0	5.0-6.8	lt. br to dk. brown	clayey sand

COMPOSITE SAMPLE DATA:

Date:	Time	Depth	Color	Description (Sand, Silt, Clay, Moisture, etc.)
Method:				
Monitor Readings (Range in ppm):				

SAMPLE COLLECTION INFORMATION:

Analysis	Container Requirements	Collected	Other
APX. IX Total Metals ~~plus Al, Ca, Fe, Mg, Mn, K, Na~~ 6th	(1) 8 oz. Glass	✓	Laucks
Dyes	(1) 8 oz glass	✓	Crane lab
Grain Size & Bulk Density	(1) 8 oz glass		Crane lab
Add: pH, CEC, TOC to 30% of samples (add to metals)			

OBSERVATIONS / NOTES:

MAP:

SEE FIGURE 5-17

Circle If Applicable:

MS/MSD	Duplicate ID No.:
—	—

Signature(s):

SOIL SAMPLE LOG SHEET

Project Site Name: NSWC Crane, IN
Project No.: CTO 10 job # N7141

[X] Surface Soil
[] Subsurface Soil
[] Sediment
[] Other:
[] QA Sample Type:

Sample ID No.: 0255 see b
Sample Location: 02SB19
Sampled By: K. Henn / T. Rojah
C.O.C. No.: 02396 & 02397

Type of Sample:
[X] Low Concentration
[] High Concentration

GRAB SAMPLE DATA:

	Depth	Color	Description (Sand, Silt, Clay, Moisture, etc.)
Date: 07/25/01 Time: 1516 Method: DPT-macrocore Monitor Reading (ppm):	0-2'	lt. br	silty clay

COMPOSITE SAMPLE DATA:

	Time	Depth	Color	Description (Sand, Silt, Clay, Moisture, etc.)
Date:				
Method:				
Monitor Readings (Range in ppm):				

SAMPLE COLLECTION INFORMATION:

Analysis	Container Requirements	Collected	Other
APX. IX Total Metals ~~plus Al, Ca, Fe, Mg, Mn, K,~~ Na 15H	(1) 8 oz. Glass	✓	Laucks
Dyes	(1) 8 oz glass	✓	Crane lab
Grain Size & Bulk Density	(1) 8 oz glass		Crane lab
Add: pH, CEC, TOC to 30% of samples (add to metals)			

OBSERVATIONS / NOTES:

Per FSP

0255190001 0-1' metals
0255190002 0-2' dyes

MAP:

SEE FIGURE 5-17

Circle if Applicable:

MS/MSD	Duplicate ID No.:

Signature(s): Keith W. [illegible]

SOIL SAMPLE LOG SHEET

Project Site Name: NSWC Crane, IN
Project No.: CTO 10 job # N7141

[] Surface Soil
[✓] Subsurface Soil
[] Sediment
[] Other:
[] QA Sample Type:

Sample ID No.: ~~02SB2~~ 02SB19046
Sample Location: 02SB19
Sampled By: K. Henn / T. Rojah
C.O.C. No.: 02396 & 02397

Type of Sample:
[X] Low Concentration
[] High Concentration

GRAB SAMPLE DATA:

	Depth	Color	Description (Sand, Silt, Clay, Moisture, etc.)
Date: 07/25/01 Time: 1527 Method: DPT-macrocore Monitor Reading (ppm):	4-6	yel-orange	clayey silt

COMPOSITE SAMPLE DATA:

Date:	Time	Depth	Color	Description (Sand, Silt, Clay, Moisture, etc.)
Method:				
Monitor Readings (Range in ppm):				

SAMPLE COLLECTION INFORMATION:

Analysis	Container Requirements	Collected	Other
APX. IX Total Metals ~~plus Al, Ca, Fe, Mg, Mn, K, Na~~ ISH	(1) 8 oz. Glass	✓	Laucks
Dyes	(1) 8 oz glass	✓	Crane lab
Grain Size & Bulk Density	(1) 8 oz glass		Crane lab
Add: pH, CEC, TOC to 30% of samples (add to metals)			

OBSERVATIONS / NOTES:

MAP:

SEE FIGURE 5-17

Circle if Applicable:

MS/MSD	Duplicate ID No.:

Signature(s): Keith W. [illegible] [illegible]

SOIL SAMPLE LOG SHEET

Project Site Name: NSWC Crane, IN
Project No.: CTO 10 job # N7141

[X] Surface Soil
[] Subsurface Soil
[] Sediment
[] Other:
[] QA Sample Type:

Sample ID No.: 02SS see below
Sample Location: 02SB20
Sampled By: K. Henn / T. Rojahn
C.O.C. No.: 02396 & 02397

Type of Sample:
[X] Low Concentration
[] High Concentration

GRAB SAMPLE DATA:

	Depth	Color	Description (Sand, Silt, Clay, Moisture, etc.)
Date: 07/25/01 Time: 1445 Method: DPT-macrocore Monitor Reading (ppm): 0	0-2'	H. br.	silty clay

COMPOSITE SAMPLE DATA:

Date:	Time	Depth	Color	Description (Sand, Silt, Clay, Moisture, etc.)
Method:				
Monitor Readings (Range in ppm):				

SAMPLE COLLECTION INFORMATION:

Analysis	Container Requirements	Collected	Other
APX. IX Total Metals ~~plus Al, Ca, Fe, Mg, Mn, K, Na~~ KH	(1) 8 oz. Glass	✓	Laucks
Dyes	(1) 8 oz glass	✓	Crane lab
Grain Size & Bulk Density	(1) 8 oz glass		Crane lab
Add: pH, CEC, TOC to 30% of samples (add to metals)			

OBSERVATIONS / NOTES:

According to FSP:
~~0255200001~~ 0-1.5' metals
0255200002 0-2' dyes

0255200001 KH

MAP:

SEE FIGURE 5-17

Circle if Applicable:

MS/MSD

Duplicate ID No.: FD07250102

Signature(s):

SOIL SAMPLE LOG SHEET

025B20 0608 KH
~~025B20~~ see below

Project Site Name: NSWC Crane, IN
Project No.: CTO 10 job # N7141

[] Surface Soil
[X] Subsurface Soil
[] Sediment
[] Other:
[] QA Sample Type:

Sample ID No.: 025B20 0608
Sample Location: ~~025B20~~
Sampled By: K. Henn / T. Rojah
C.O.C. No.: 02396 & 02397

Type of Sample:
[X] Low Concentration
[] High Concentration

GRAB SAMPLE DATA:

	Depth	Color	Description (Sand, Silt, Clay, Moisture, etc.)
Date: 07/25/01 Time: 1506 Method: DPT-macrocore Monitor Reading (ppm): 0	6 to 8	H-br to dk. brown	Sr clayey silt and sand

COMPOSITE SAMPLE DATA:

Date:	Time	Depth	Color	Description (Sand, Silt, Clay, Moisture, etc.)
Method:				
Monitor Readings (Range in ppm):				

SAMPLE COLLECTION INFORMATION:

Analysis	Container Requirements	Collected	Other
APX. IX Total Metals plus Al, Ca, Fe, Mg, Mn, K, Na	(1) 8 oz. Glass	✓	Laucks
Dyes	(1) 8 oz glass	✓	Crane lab
Grain Size & Bulk Density	(1) 8 oz glass		Crane lab
Add: pH, CEC, TOC to 30% of samples (add to metals)			

OBSERVATIONS / NOTES:

Boring # 025B20

MAP:

SEE FIGURE 5-17

Circle If Applicable:

MS/MSD	Duplicate ID No.:

Signature(s):

APPENDIX B.2

GROUND WATER SAMPLE LOG SHEETS

GROUND WATER SAMPLE LOG FORM

Project Site Name: NSWC CRANE, IN
Project No.: CTO 10 N7141

Sample ID No.: 026W0101
Sample Location: 02-01-81
Sampled By: R. Hess
C.O.C. No.: 02398E02400

SAMPLING DATA:

	Color	pH	S.C.	Temp.	Turbidity	DO	ORP	Odor
Date: 7/27/01	Visual	Standard	mS/cm	Degrees C	NTU	mg/l	mV	
Time-Start: 1650 End: 1850								
Method: Low Flow	clear	5.90	2.029	20.99	10	12.16	584.0	none

PURGE DATA:

Date: 7/27/01	Total Well Depth (TD): 38.10	End Purge (hrs): 1650
Method: Low Flow	Static Water Level (WL): 26.10	Total Purge Time (min): 120 min
Well Casing: 2" PVC	Start Purge (hrs): 1450	Total Vol. Purged (gal): 1.95 gal
One Casing Volume(gal): 1.939	Total Depth - 38.21'	

SAMPLE COLLECTION INFORMATION:

Analysis	Preservative	Container Requirements	Collected
APX. IX Total Metals plus Al, Ca, Fe, Mg, Mn, K, Na	HNO_3/4°C	(1) 1000 mL Polyethylene	✓
APX. IX Dissolved Metals plus Al, Ca, Fe, Mg, Mn, K, Na	HNO_3/4°C	(1) 1000 mL Polyethylene	
TOC	H_3PO_4/4°C	(2) 40 ml vial	✓
TSS, Sulfate, Chloride	4°C	(1) 1000 mL Polyethylene	✓
Dyes	4°C	~~(2)~~ 1 1000 ml amber glass	✓
NA (field only)	4°C	(1) 500 mL Polyethylene	✓
Note: Dissolve metals only collected if Turb. is >10 NTUs			

OBSERVATIONS / NOTES:

PID reading in PVC riser pipe = 176 (ppm)
PID reading in Breathing Zone = 0 (ppm)

Pump set at 29.6 ft below TOC.

QA Samples Collected:

MS/MSD	Duplicate ID No.:
—	—

Signature(s): Keith W. [illegible]

LOW FLOW PURGE DATA SHEET

PROJECT SITE NAME: NSWC Crane, IN
PROJECT NUMBER: 7141 CTO 10

WELL ID.: 02-1-81
DATE: 2/22/01

	Time (Hrs.)	Water Level (Ft. below TOC)	Pump Rate (mL/Min.)	pH (S.U.)	S. Cond. (mS/cm)	Turb. (NTU)	DO (mg/L)	Temp.* (Celcius)	ORP mV	Cumulative Volume	Comments
	1450	26.23	105								Start of pumping
~~1458~~	1500	26.60	105	5.06	2.142	—	2.38	19.53	483.0	1.05L	
	1510	27.10	105	4.46	2.054	120	3.41	18.60	566.0	2.10L	(0.555 gal)
	1520	27.52	~~80~~ 75	4.81	2.072	75	6.03	19.09	579.6	3.15L	(0.82 gal)
	1530	27.75	75	5.03	2.098	65	8.46	20.01	584.4	3.86L	(1.02 gal)
	1540	27.91	67	5.10	2.102	55	9.93	20.18	590.8	4.53L	(1.19 gal)
	1550	27.95	45	5.46	2.084	36	11.27	20.65	588.3	5.08L	(1.34 gal)
	1600	27.98	45	5.64	2.083	26	11.27	21.38	582.9	5.53L	(1.46 gal)
1610	~~1605~~	27.97	36	5.62	2.072	20	12.45	22.19	585.2	5.89L	(1.55 gal)
	1620	27.96	43	5.71	2.073	15	12.68	21.86	587.9	(6.25L)	(1.65 gal)
	1630	27.99	43	5.86	2.045	12	12.47	21.17	589.5	6.68L	(1.76 gal)
	1640	28.05	36	5.87	2.034	10	12.29	20.88	583.6	7.04	((1.86 gal)
	1650	28.10	36	5.90	2.029	10	12.16	20.99	584.0	7.4	(1.95 gal)

Notes:
* Very sunny conditions mixed w/ occasional clouds affecting temp

SIGNATURE: [illegible]

PAGE [illegible] OF 2

SAMPLE LOG SHEET
NATURAL ATTENUATION PARAMETERS

Tetra Tech NUS, Inc.

Project Site Name: NSWC Crane - DBG

Project No.: CTO 10 # 7141

Sampled By: K. Hewn

Sample ID No.: 02GW0101

Sample Location: 02-01-01

Duplicate: ☐

SAMPLING DATA:

	Color (Visual)	pH (SU)	S.C. (mS/cm)	Temp. (°C)	Turbidity (NTU)	DO (Meter, mg/l)	ORP mV
Date: 7/27/01							
Time: 1650							
Method: Low Flow.	Clear	5.90	2.029	20.99	10	12.16	584.0

SAMPLE COLLECTION/ANALYSIS INFORMATION:

Divalent Iron: as Fe^{+2}, Range 0 - 3 mg/L

Equipment: HACH DR-850 COLORIMETER

Analysis Time: 1753 @well

Concentration: 0.00 mg/L

Notes:

Carbon Dioxide: CO_2, Dissolved, Range 10 - 2500 ppm

Equipment: Chemetrics Test Kit

Analysis Time: 1730 @well

Range Used:	Range	Concentration ppm
☐	10 to 100 ppm	
☑	100 to 1000 ppm	114
☐	250 to 2500 ppm	

Concentration: 114 ppm

Notes:

Dissolved Oxygen: O_2, Range 0 - 12 ppm

Equipment: Chemetrics Test Kit

Analysis Time: 1706

Range Used:	Range	Concentration ppm
☐	0 to 1 ppm	
☑	1 to 12 ppm	3.5

Concentration: 3.5 ppm @well

Notes:

Hydrogen Sulfide: as H_2S, Range 0 - 5

Equipment: HACH HS-C

Analysis Time: 1713 @well

Concentration: 0.0 mg/L

Notes:

SAMPLE LOG SHEET
NATURAL ATTENUATION PARAMETERS

Tetra Tech NUS, Inc.

Project Site Name: NSWC Crane - DBG

Project No.: CTO 10 # 7141

Sampled By: K. Hunt

Sample ID No.: 02GW0101 ~~02-01-81~~

Sample Location: 02-01-81

Duplicate: ☐

SAMPLE COLLECTION/ANALYSIS INFORMATION:

Alkalinity: total, as $CaCO_3$, Range 10 to 1000 ppm

Equipment: Chemetrics Test Kit

Analysis Time: 1730 @ well

Range Used:	Range	Concentration ppm
☐	10 to 100 ppm	
☑	50 to 500 ppm	175
☐	100 to 1000 ppm	

Concentration: 175 ppm

Notes:

Sulfide: S^{2-}, Range 0-0.7 mg/L

Equipment: HACH DR-850 Colorimeter

Program No.: 93

Concentration: 0.02 mg/L

Analysis Time: 1746 @ well

Notes:

Nitrite: NO_2^--N, Range 0-0.35 mg/L

7.28.01

Equipment: HACH DR-850 Colorimeter

Analysis Time: 0750

Program No.: 62

Concentration: 0.0 mg/L

Notes: Alternate forms: NO_2 0 $NaNO_2$ 0 mg/L

Nitrate: NO_3^--N, Range 0 - 0.50 mg/L

7.28.0

Equipment: HACH DR-850 Colorimeter

Analysis Time: 0825

Program No.: 55

Concentration: 0.69 mg/L

0.23 x 3 = 0.69 mg/L

Nitrite Interference Treatment: ☐

If results are over limit use dilution method at step 3, 5ml sample 10ml DI result X3, range upto 1.5mg/L

Notes: Alternate form: NO_3 3.09 mg/L

Used Dilution method to obtain results!!!

GROUND WATER SAMPLE LOG FORM

Project Site Name: NSWC CRANE, IN
Project No.: CTO 10 N7141

Sample ID No.: 02GW0201
Sample Location: 02-02-81
Sampled By: K. Henn / T. Rojek
C.O.C. No.: 02400 & 02398

SAMPLING DATA:

	Color Visual	pH Standard	S.C. mS/cm	Temp. Degrees C	Turbidity NTU	DO mg/l	ORP mV	Odor
Date: 7/28/01								
Time-Start: 1705 End: 1920								
Method: Low Flow	CLEAR	6.23	1.905	22.00	2.0	8.45	+ 502	CLEAR

PURGE DATA:

Date: 7/28/01	Total Well Depth (TD):	58.1	End Purge (hrs): 1700
Method: Low Flow	Static Water Level (WL):	45.74	Total Purge Time (min): 150
Well Casing: 2" PVC	Start Purge (hrs):	1430	Total Vol. Purged (gal): 2.02
One Casing Volume(gal): 2.01			

SAMPLE COLLECTION INFORMATION:

Analysis	Preservative	Container Requirements	Collected
APX. IX Total Metals plus Al, Ca, Fe, Mg, Mn, K, Na	HNO_3/4°C	(1) 1000 mL Polyethylene	✓
APX. IX Dissolved Metals plus Al, Ca, Fe, Mg, Mn, K, Na	HNO_3/4°C	(1) 1000 mL Polyethylene	NO
TOC	H_3PO_4/4°C	(2) 40 ml vial	✓
TSS, Sulfate, Chloride	4°C	(1) 1000 mL Polyethylene	✓
Dyes	4°C	2 (3) 1000 ml amber glass	✓
NA (field only)	4°C	(1) 500 mL Polyethylene	✓
Note: Dissolve metals only collected if Turb. is >10 NTUs			

OBSERVATIONS / NOTES:

PID reading in PVC riser pipe = 0 (ppm)
PID reading in Breathing Zone = 0 (ppm)

pump intake set at ~50'

58.1 - 45.74 = 12.36 x .163 = 2.01 gal or 7.6 L

QA Samples Collected:

MS/MSD	Duplicate ID No.:
—	—

Signature(s): Keith W. [illegible]

LOW FLOW PURGE DATA SHEET

PROJECT SITE NAME: NSWC Crane, IN
PROJECT NUMBER: 7141 CTO 10

WELL ID.: 02-02-81
DATE: 7/20/01

Time (Hrs.)	Water Level (Ft. below TOC)	Pump Rate (mL/Min.)	pH (S.U.)	S. Cond. (mS/cm)	Turb. (NTU)	DO (mg/L)	Temp. (Celcius)	ORP mV	Comments
1430	45.74	—	6.57	1.13	—	17.46	21.53	320	START PURGE
1440	46.63	110	6.21	1.860	17	16.35	17.84	442	1100 ml CLEAR
1450	46.97	70	6.23	1.846	14	13.95	18.96	471	1800 ml "
1500	47.30	68	6.17	1.843	12	11.28	19.44	493	2480 ml "
1510	47.67	60	6.15	1.840	8.1	10.80	19.57	507	3080 ml "
1520	47.98	57	6.17	1.849	6.9	10.82	20.15	508	3650 ml "
1530	48.32	52	6.13	1.868	6.6	10.15	19.85	511	4170 ml "
1540	48.43	46	6.20	1.865	5.1	10.12	21.29	509	4630 ml "
1550	48.55	40	6.19	1.878	4.1	9.78	21.46	509	5030 ml "
1600	48.67	45	6.19	1.884	3.6	9.27	21.06	508	5480 ml "
1610	48.82	42	6.24	1.886	3.1	8.98	20.70	504	5900 ml "
1620	48.89	40	6.25	1.883	4.0	9.10	21.57	504	6300 ml "
1630	48.97	36	6.27	1.898	4.7	9.11	22.04	502	6660 ml "
1640	49.01	34	6.25	1.899	2.5	8.82	22.10	503	7000 ml "
1650	49.05	32	6.23	1.899	2.4	8.55	22.01	501	7320 ml "
1700	49.10	35	6.23	1.905	2.0	8.45	22.00	502	7670 ml "
1705	—								START SAMPLING

MIN VOL. = 7.6 L

SIGNATURE: [signature]

PAGE 1

SAMPLE LOG SHEET
NATURAL ATTENUATION PARAMETERS

Tetra Tech NUS, Inc.

Project Site Name: NSWC Crane - DBG

Project No.: CTO 10 # 7141

Sampled By: K. Heun / T. Rojahn

Sample ID No.: 02GW0201

Sample Location: 02-02-81

Duplicate: ☐

SAMPLING DATA:

Date: 7/28/01	Color	pH	S.C.	Temp.	Turbidity	DO	ORP
Time: 1705	(Visual)	(SU)	(mS/cm)	(°C)	(NTU)	(Meter, mg/l)	mV
Method: Low Flow,	CLEAR	6.23	1.905	22.00	2.0	8.45	+ 502

SAMPLE COLLECTION/ANALYSIS INFORMATION:

Divalent Iron: as Fe^{+2}, Range 0 - 3 mg/L

Equipment: HACH DR-850 COLORIMETER

Analysis Time: 1753

Concentration: 0.71 mg/L

Notes:

Carbon Dioxide: CO_2, Dissolved, Range 10 - 2500 ppm

Equipment: Chemetrics Test Kit

Analysis Time: 1723

Range Used:	Range	Concentration ppm
☑	10 to 100 ppm	50 ppm
☑	100 to 1000 ppm	—
☐	250 to 2500 ppm	

Concentration: 50 ppm

Notes:

Dissolved Oxygen: O_2, Range 0 - 12 ppm

Equipment: Chemetrics Test Kit

Analysis Time: 1713

Range Used:	Range	Concentration ppm
☐	0 to 1 ppm	
☑	1 to 12 ppm	

Concentration: 2 ppm

Notes:

Hydrogen Sulfide: as H_2S, Range 0 - 5

Equipment: HACH HS-C

Analysis Time: 1710

Concentration: 0 mg/L

Notes:

Tetra Tech NUS, Inc.

SAMPLE LOG SHEET
NATURAL ATTENUATION PARAMETERS

Project Site Name: NSWC Crane - DBG

Project No.: CTO 10 # 7141

Sampled By: K. Hew / T. Rojahn

Sample ID No.: 02GW0201

Sample Location: 02-02-01

Duplicate: ☐

SAMPLE COLLECTION/ANALYSIS INFORMATION:

Alkalinity: total, as $CaCO_3$, Range 10 to 1000 ppm

Equipment: Chemetrics Test Kit

Analysis Time: 1730

Range Used:	Range	Concentration ppm
☐	10 to 100 ppm	
☐	50 to 500 ppm	
☑	100 to 1000 ppm	275 ppm

Concentration: 275 ppm

Notes:

Sulfide: S^{2-}, Range 0-0.7 mg/L

Equipment: HACH DR-850 Colorimeter

Analysis Time: 1741

Program No.: 93

Concentration: 0.01 mg/L

Notes:

Nitrite: NO_2^--N, Range 0-0.35 mg/L

7.29.01

Equipment: HACH DR-850 Colorimeter

Analysis Time: 0720

Program No.: 62

Concentration: 0.000 mg/L

Notes: Alternate forms: NO_2 0.001 $NaNO_2$ 0.001 mg/L

Nitrate: NO_3^--N, Range 0 - 0.50 mg/L

7.29.01

Equipment: HACH DR-850 Colorimeter

Analysis Time: 0845

Program No.: 55

Concentration: 0.10 mg/L

Nitrite Interference Treatment: ☐

If results are over limit use dilution method at step 3, 5ml sample 10ml DI result X3, range upto 1.5mg/L

Notes: Alternate form: NO_3 0.42 mg/L

GROUND WATER SAMPLE LOG FORM

Project Site Name: NSWC CRANE, IN
Project No.: CTO 10 N7141

Sample ID No.: 026W0501
Sample Location: 02-05
Sampled By: K. Simpson / ~~F. Brinker~~
C.O.C. No.: 02396 & 02397 K. Hewn

SAMPLING DATA:

	Color	pH	S.C.	Temp.	Turbidity	DO	ORP	Odor
	Visual	Standard	mS/cm	Degrees C	NTU	mg/l	mV	
Date: 7/26/01 Time-Start: ~~0800~~ 0935 End: 1040								
Method: SAME	clear	6.11	3.285	18.15	6.6	8.80	341.6	NONE

PURGE DATA:

Date: 7.26.01	Total Well Depth (TD): 69.3	End Purge (hrs): 0935
Method: LOW FLOW BLADDER	Static Water Level (WL): 56.87	Total Purge Time (min): 95 min
Well Casing: 2" PVC	Start Purge (hrs): 0800	Total Vol. Purged (gal): 2.2 gal
One Casing Volume(gal): 2.0 gal		

SAMPLE COLLECTION INFORMATION:

Analysis	Preservative	Container Requirements	Collected
APX IX Total Metals plus Al, Ca, Fe, Mg, Mn, K, Na	HNO_3/4°C	(1) 1000 mL Polyethylene	✓
~~APX IX Dissolved Metals plus Al, Ca, Fe, Mg, Mn, K, Na~~	~~HNO_3/4°C~~	~~(1) 1000 mL Polyethylene~~	
TOC	H_3PO_4/4°C	(2) 40 ml vial	✓
TSS, Sulfate, Chloride	4°C	(1) 1000 mL Polyethylene	✓
Dyes	4°C	2 (~~1~~) 1000 ml amber glass KS	✓
NA (field only)	4°C	(1) 500 mL Polyethylene	✓
Note: Dissolve metals only collected if Turb. is >10 NTUs			

OBSERVATIONS / NOTES:

PID reading in PVC riser pipe = 0 (ppm)
PID reading in Breathing Zone = 0 (ppm)

PUMP SET @ 62'±

QA Samples Collected:

MS/MSD	Duplicate ID No.:
—	—

Signature(s): [illegible]

95 min = 1 vol (@ 80 ml/min)

LOW FLOW PURGE DATA SHEET

PROJECT SITE NAME: NSWC Crane, IN
PROJECT NUMBER: 7141

WELL ID.: 02-05
DATE: 7.26.01

Time (Hrs.)	Water Level (Ft. below TOC)	Pump Rate (mL/Min.)	pH (S.U.)	S. Cond. (mS/cm)	Turb. (NTU)	DO (mg/L)	Temp. (Celcius)	ORP mV	Cumulative Volume (L) Comments
0800	~~69.3~~ 56.8	200							START PURGE
0807	57.33	100	6.53	3.360	85	7.76	17.1	256	1.4 L
0815	57.51	80	6.40	3.341	65	10.84	17.7	307	2.2 L
0825	~~57.50~~ 57.50	80	6.32	3.345	37	10.21	17.93	297.1	3.0 L
0835	57.63	80	6.27	3.329	27	9.64	17.92	299.7	3.8 L
0845	57.60	80	6.25	3.309	20	9.30	17.89	307.3	4.6 L
0855	57.64	80	6.21	3.297	13	9.28	17.73	314.7	5.4 L
~~0~~ 0905	57.64	80	6.18	3.281	13	9.54	17.95	327.2	6.2 L (1.63 gal)
0915	57.66	80	6.14	3.271	9.3	9.41	18.01	333.2	7.0 L (1.8 gal)
0925	57.64	80	6.11	3.285	6.6	8.80	18.15	341.6	7.8 L (2.0 gal) ← begin sampling (flow thru cell drained @ 0925)
~~0935~~		~~80~~	~~6.04~~	~~3.237~~			~~18.41~~		8.6 L (2.2 gal)

SIGNATURE: [illegible]

SAMPLE LOG SHEET
NATURAL ATTENUATION PARAMETERS

Tetra Tech NUS, Inc.

Project Site Name: NSWC Crane - DBG

Project No.: CTO 10 # 7141

Sampled By: KS / KH

Sample ID No.: 02GW05 01

Sample Location: 02 05

Duplicate: ☐

SAMPLING DATA:

Date: 7.26.01	Color	pH	S.C.	Temp.	Turbidity	DO	ORP
Time: 0935	(Visual)	(SU)	(mS/cm)	(°C)	(NTU)	(Meter, mg/l)	mV
Method: Low Flow, BLADDER	CLEAR						

SAMPLE COLLECTION/ANALYSIS INFORMATION:

Divalent Iron: as Fe^{+2}, Range 0 - 3 mg/L

Equipment: HACH DR-850 COLORIMETER

Analysis Time: 1038

Concentration: 1.09 mg/L

Notes: @ WELL

Carbon Dioxide: CO_2, Dissolved, Range 10 - 2500 ppm

Equipment: Chemetrics Test Kit

Analysis Time: 0959 at the well head

Range Used:	Range	Concentration ppm
☐	10 to 100 ppm	
☑	100 to 1000 ppm	275
☐	250 to 2500 ppm	

Concentration: 275 ppm

Notes: @ WELL

Dissolved Oxygen: O_2, Range 0 - 12 ppm

Equipment: Chemetrics Test Kit

Analysis Time: 0949 At the wellhead

Range Used:	Range	Concentration ppm
☐	0 to 1 ppm	0.7
☑	1 to 12 ppm	1.0

Concentration: 0.7 ppm

Notes: @ WELL

Hydrogen Sulfide: as H_2S, Range 0 - 5

Equipment: HACH HS-C

Analysis Time: 0942

Concentration: 0 mg/L

Notes: @ WELL

KSB

Tetra Tech NUS, Inc.

SAMPLE LOG SHEET
NATURAL ATTENUATION PARAMETERS

Project Site Name: NSWC Crane - DBG

Project No.: CTO 10 #7141

Sampled By: RS / RH

Sample ID No.: 026W05 01

Sample Location: 0205

Duplicate: ☐

SAMPLE COLLECTION/ANALYSIS INFORMATION:

Alkalinity: total, as $CaCO_3$, Range 10 to 1000 ppm

Equipment: Chemetrics Test Kit

Analysis Time: 1015

Range Used:	Range	Concentration ppm
☐	10 to 100 ppm	
☑	50 to 500 ppm	350
☑	100 to 1000 ppm	—

Concentration: 350 ppm

Notes: @ WELL

Sulfide: S^{2-}, Range 0-0.7 mg/L

Equipment: HACH DR-850 Colorimeter

Analysis Time: 1027

Program No.: 93

Concentration: 0.03 mg/L

Notes: @ WELL

Nitrite: NO_2^--N, Range 0-0.35 mg/L

Equipment: HACH DR-850 Colorimeter

Analysis Time: 1120

Program No.: 62

Concentration: 0.002 mg/L

Notes: Alternate forms: NO_2 0.007 $NaNO_2$ 0.010 mg/L

Nitrate: NO_3^--N, Range 0 - 0.50 mg/L

Equipment: HACH DR-850 Colorimeter

Analysis Time: 1210

Program No.: 55

Concentration: 0.01 mg/L

Nitrite Interference Treatment: ☑

If results are over limit use dilution method at step 3, 5ml sample 10ml DI result X3, range upto 1.5mg/L

Notes: Alternate form: NO_3 0.06 mg/L

RS RH

GROUND WATER SAMPLE LOG FORM

Project Site Name: NSWC CRANE, IN
Project No.: CTO 10 N7141

Sample ID No.: 026W0601
Sample Location: 02-06
Sampled By: R. SIMPSON
C.O.C. No.:

SAMPLING DATA:

Date: 7.26.01	Color	pH	S.C.	Temp.	Turbidity	DO	ORP	Odor
Time-Start: End:	Visual	Standard	mS/cm	Degrees C	NTU	mg/l	mV	
Method:								

PURGE DATA:

Date: 7.26.01	Total Well Depth (TD): 61' ±	End Purge (hrs):
Method:	Static Water Level (WL): 60.48	Total Purge Time (min):
Well Casing: 2" PVC	Start Purge (hrs): 1600	Total Vol. Purged (gal):
One Casing Volume(gal):		

SAMPLE COLLECTION INFORMATION:

Analysis	Preservative	Container Requirements	Collected
APX IX Total Metals plus Al, Ca, Fe, Mg, Mn, K, Na	HNO_3/4°C	(1) 1000 mL Polyethylene	
APX IX Dissolved Metals plus Al, Ca, Fe, Mg, Mn, K, Na	HNO_3/4°C	(1) 1000 mL Polyethylene	
TOC	H_3PO_4/4°C	(2) 40 ml vial	
TSS, Sulfate, Chloride	4°C	(1) 1000 mL Polyethylene	
Dyes	4°C	(2) 500 ml amber glass	
NA (field only)	4°C	(1) 500 mL Polyethylene	
Note: Dissolve metals only collected if Turb. is >10 NTUs			

NOT SAMPLED

OBSERVATIONS / NOTES:

PID reading in PVC riser pipe = (ppm)
PID reading in Breathing Zone = (ppm)

< 1.0' OF WATER IN WELL, NO SAMPLE COLLECTED.

ALSO THERE IS A SLIGHT BEND IN THE RISER ≈ 4' FROM TOC AND A BAILER WOULD NOT PASS THE BEND.

QA Samples Collected:

MS/MSD	Duplicate ID No.:

Signature(s): [illegible]

NSWC Crane
Field Form
Revision 1
October 2000

GROUND WATER SAMPLE LOG FORM

Project Site Name: NSWC CRANE, IN
Project No.: CTO 10 N7141

Sample ID No.: 02GW0701
Sample Location: 02-07
Sampled By: T. ROJAHN
C.O.C. No.: 02400E072901

SAMPLING DATA:

Date: 7/29/01	Color Visual	pH Standard	S.C. mS/cm	Temp. Degrees C	Turbidity NTU	DO mg/l	ORP mV	Odor
Time-Start: 1400 End: 1650								
Method: SAME	CLEAR	5.22	2.79	25.55	1.6	12.34	+ 661	NONE

PURGE DATA:

Date: 7/29/01	Total Well Depth (TD): 68'.0	End Purge (hrs): 1355
Method: BLADDER	Static Water Level (WL): 54.80	Total Purge Time (min): 220
Well Casing: 2" PVC	Start Purge (hrs): 1015	Total Vol. Purged (gal): 2.16
One Casing Volume(gal): 2.15		

SAMPLE COLLECTION INFORMATION:

Analysis	Preservative	Container Requirements	Collected
APX. IX Total Metals plus Al, Ca, Fe, Mg, Mn, K, Na	HNO_3/4°C	(1) 1000 mL Polyethylene	✓
APX. IX Dissolved Metals plus Al, Ca, Fe, Mg, Mn, K, Na	HNO_3/4°C	(1) 1000 mL Polyethylene	NO
TOC	H_3PO_4/4°C	(2) 40 ml vial	✓
TSS, Sulfate, Chloride	4°C	(1) 1000 mL Polyethylene	✓
Dyes	4°C	2 (2) 1000 ml amber glass	✓
NA (field only)	4°C	(1) 500 mL Polyethylene	✓
Note: Dissolve metals only collected if Turb. is >10 NTUs			

OBSERVATIONS / NOTES:

PID reading in PVC riser pipe = 0 (ppm)
PID reading in Breathing Zone = 0 (ppm)

PUMP
INTAKE @ 57.5'

68.0 - 54.80 = 13.2 X .163 = 2.15 gal or 8.14 L

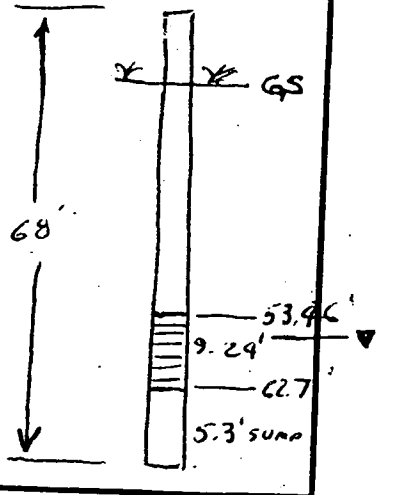

QA Samples Collected:

MS/MSD	Duplicate ID No.:	Signature(s):
—	—	Terry Rojahn

FLOW THRU CELL IN SUN + LOW FLOW = HIGHER TEMPS.

LOW FLOW PURGE DATA SHEET

PROJECT SITE NAME: NSWC Crane, IN
PROJECT NUMBER: 7141

WELL ID.: 02-07
DATE: 07-29-01

Time (Hrs.)	Water Level (Ft. below TOC)	Pump Rate (mL/Min.)	pH (S.U.)	S. Cond. (mS/cm)	Turb. (NTU)	DO (mg/L)	Temp. (Celcius)	ORP mV	Comments
1015	54.80	—	5.45	2.475	16	9.54	20.97	436	Start PURGE
1025	55.43	100	4.84	2.403	18	8.43	18.61	576	1000ml CIGAR, NO ODOR
1035	55.51	33	5.35	2.403	13	8.75	20.84	579	1330ml "
1045	55.58	43	5.32	2.455	8.9	8.57	22.48	588	1760ml "
1055	55.62	37	5.63	2.523	7.4	8.22	22.41	590	2130ml "
1105	55.64	39	5.55	2.549	4.8	7.84	22.79	598	2520ml "
1115	55.65	35	5.35	2.554	4.6	8.05	23.52	607	2870ml "
1125	55.66	36	5.13	2.576	3.5	8.28	24.34	624	3230ml "
1135	55.69	33	5.28	2.617	3.5	8.17	24.13	631	3560ML "
1145	55.68	34	5.51	2.619	3.5	7.87	23.40	619	3900ML "
1155	55.69	34	5.34	2.623	3.4	8.08	23.87	628	4250ML "
1205	55.70	35	5.32	2.638	3.2	8.10	24.12	632	4600ML "
1215	55.68	35	5.17	2.674	1.9	9.64	24.77	646	4950ML "
1225	55.72	35	5.25	2.694	2.0	9.86	24.14	644	5300ML "
1235	55.72	32	5.23	2.706	1.6	10.01	24.01	643	5620ML "
1245	55.72	33	5.22	2.711	3.7	10.39	24.63	652	5950ML "
1255	55.74	32	5.30	2.723	4.0	10.21	24.38	645	6270ML "
1305	55.74	32	5.37	2.745	4.1	10.13	24.05	644	6590ML "
1315	55.76	32	5.37	2.758	3.1	10.67	24.53	645	6910ML "
1325	55.76	32	5.37	2.763	2.9	10.83	24.58	647	7230ML "
1335	55.78	32	5.21	2.777	2.6	12.01	25.39	653	7550ML "
1345	55.78	32	5.18	2.785	2.7	12.12	25.47	659	7870ML "
1355	55.75	32	5.22	2.798	1.6	12.34	25.55	661	8190ML "
1400									Start SAMPLING

MIN VOL = 8.14L

SIGNATURE: Terry Rigel / KES

SAMPLE LOG SHEET
NATURAL ATTENUATION PARAMETERS

Tetra Tech NUS, Inc.

Project Site Name: NSWC Crane - DBG

Project No.: CTO 10 # 7141

Sampled By: T. Rajah

Sample ID No.: 02GW0701

Sample Location: 02-07

Duplicate: ☐

SAMPLING DATA:

Date: 7/29/01	Color	pH	S.C.	Temp.	Turbidity	DO	ORP
Time: 1400	(Visual)	(SU)	(mS/cm)	(°C)	(NTU)	(Meter, mg/l)	mV
Method: Low Flow.	CLEAR	5.22	2.798	25.55	1.6	12.39	+ 661

SAMPLE COLLECTION/ANALYSIS INFORMATION:

Divalent Iron: as Fe^{+2}, Range 0 - 3 mg/L

Equipment: HACH DR-850 COLORIMETER

Analysis Time: 1415

Concentration: 0.08 mg/L

Notes:

Carbon Dioxide: CO_2, Dissolved, Range 10 - 2500 ppm

Equipment: Chemetrics Test Kit

Analysis Time: 1433

Range Used:	Range	Concentration ppm
☐	10 to 100 ppm	
☑	100 to 1000 ppm	125
☐	250 to 2500 ppm	

Concentration: 125 ppm

Notes:

Dissolved Oxygen: O_2, Range 0 - 12 ppm

Equipment: Chemetrics Test Kit

Analysis Time: 1405

Range Used:	Range	Concentration ppm
☐	0 to 1 ppm	
☑	1 to 12 ppm	4

Concentration: 4 ppm

Notes:

Hydrogen Sulfide: as H_2S, Range 0 - 5

Equipment: HACH HS-C

Analysis Time: 1650

Concentration: 0 mg/L

Notes:

Tetra Tech NUS, Inc.

SAMPLE LOG SHEET
NATURAL ATTENUATION PARAMETERS

Project Site Name: NSWC Crane - DBG

Project No.: CTO 10 # 7141

Sampled By: T. ROJAHN

Sample ID No.: 026W0701

Sample Location: 02-07

Duplicate: ☐

SAMPLE COLLECTION/ANALYSIS INFORMATION:

Alkalinity: total, as $CaCO_3$, Range 10 to 1000 ppm

Equipment: Chemetrics Test Kit

Analysis Time: 1446

Range Used:	Range	Concentration ppm
☐	10 to 100 ppm	
☐	50 to 500 ppm	
☑	100 to 1000 ppm	260

Concentration: 260 ppm

Notes:

Sulfide: S^{2-}, Range 0-0.7 mg/L

Equipment: HACH DR-850 Colorimeter

Analysis Time: 1426

Program No.: 93

Concentration: 0.02 mg/L

Notes:

Nitrite: NO_2^--N, Range 0-0.35 mg/L

7/30/01

Equipment: HACH DR-850 Colorimeter

Analysis Time: 0806

Program No.: 62

Concentration: 0.003 mg/L

Notes: Alternate forms: NO_2 0.011 $NaNO_2$ 0.016 mg/L

Nitrate: NO_3^--N, Range 0 - 0.50 mg/L

7/30/01

Equipment: HACH DR-850 Colorimeter

Analysis Time: 0850

Program No.: 55

Concentration: 0.08 mg/L

Nitrite Interference Treatment: ☑

If results are over limit use dilution method at step 3, 5ml sample 10ml DI result X3, range upto 1.5mg/L

Notes: Alternate form: NO_3 0.38 mg/L

GROUND WATER SAMPLE LOG FORM

Project Site Name: NSWC CRANE, IN
Project No.: CTO 10 N7141

Sample ID No.: 02GW0801
Sample Location: 02-08
Sampled By: KH/TR
C.O.C. No.: 02396 & 02398

SAMPLING DATA:

	Color Visual	pH Standard	S.C. mS/cm	Temp. Degrees C	Turbidity NTU	DO mg/l	ORP mV	Odor
Date: 7/26/01 Time-Start: 1520 End: 1645 Method: SAME	CLEAR	6.12	2.573	17.41	1.8	9.85	481	NONE

PURGE DATA:

Date: 7/26/01	Total Well Depth (TD): 63.0	End Purge (hrs): 1515	
Method: Bladder	Static Water Level (WL): 48.99	Total Purge Time (min): 140	
Well Casing: 2" PVC	Start Purge (hrs): 1255	Total Vol. Purged (~~gal~~): 9.0 L	
One Casing Volume(~~gal~~): 8.6L			

SAMPLE COLLECTION INFORMATION:

Analysis	Preservative	Container Requirements	Collected
APX IX Total Metals plus Al, Ca, Fe, Mg, Mn, K, Na	HNO_3/4°C	(1) 1000 mL Polyethylene	✓
APX IX Dissolved Metals plus Al, Ca, Fe, Mg, Mn, K, Na	HNO_3/4°C	(1) 1000 mL Polyethylene	NO
TOC	H_3PO_4/4°C	(2) 40 ml vial	✓
TSS, Sulfate, Chloride	4°C	(1) 1000 mL Polyethylene	✓
Dyes	4°C	2 (~~8~~) 1000 ml amber glass	✓
NA (field only)	4°C	(1) 500 mL Polyethylene	✓
Note: Dissolve metals only collected if Turb. is >10 NTUs			

OBSERVATIONS / NOTES:

PID reading in PVC riser pipe = 0.0 (ppm)
PID reading in Breathing Zone = 0.0 (ppm)

SUMP : 5.33'
SCREEN : 8.9'

Intake @ 54'

63.0 - 48.99 = 14.01 x .163 = 2.28 gal / 8.6 L

QA Samples Collected:

MS/MSD	Duplicate ID No.:-

Signature(s): [illegible]

LOW FLOW PURGE DATA SHEET

PROJECT SITE NAME: NSWC Crane, IN
PROJECT NUMBER: 7141

WELL ID.: 02-08
DATE: 07/26/01

Time (Hrs.)	Water Level (Ft. below TOC)	Pump Rate (mL/Min.)	pH (S.U.)	S. Cond. (mS/cm)	Turb. (NTU)	DO (mg/L)	Temp. (Celcius)	ORP mV	Comments
1255	48.77	100	6.27	2.701	—	21.93	17.58	299	WL. AFTER PUMP INST.
1305	49.53	100	6.22	2.673	7.4	19.69	17.31	337	1000 ml CLEAR
1315	49.73	80	6.20	2.661	6.8	15.38	17.08	395	1800 "
1325	49.85	66	6.25	2.671	5.7	13.32	17.53	415	2460 "
1335	49.95	57	6.23	2.678	5.1	11.98	17.53	428	3030 "
1345	50.03	63	6.22	2.680	5.4	11.40	17.56	443	3660 "
1355	50.11	58	6.24	2.674	4.5	10.56	17.34	450	4240 "
1405	50.17	63	6.24	2.668	3.9	10.59	17.42	452	4870 "
1415	50.23	58	6.18	2.647	4.1	10.63	17.48	460	5450 "
1425	50.26	63	6.20	2.631	3.3	10.58	17.42	465	6080 "
1435	50.31	55	6.23	2.614	2.5	10.42	17.29	469	6630 "
1445	50.32	63	6.25	2.607	2.2	10.40	17.20	471	7260 "
1455	50.36	56	6.28	2.589	2.7	9.88	17.02	470	7820 "
1505	50.40	63	6.15	2.573	2.5	9.97	17.30	470	8450 "
1510	50.41	56	6.13	2.575	2.3	9.84	17.36	478	8730 "
1515	50.42	56	6.12	2.573	1.8	9.85	17.41	481	9010 "
1520	—							→	START SAMPLING

SIGNATURE: Terry Rogal

SAMPLE LOG SHEET
NATURAL ATTENUATION PARAMETERS

Tetra Tech NUS, Inc.

Project Site Name: NSWC Crane - DBG

Project No.: CTO 10 # 7141

Sampled By: KH / TR

Sample ID No.: 02GW0801

Sample Location: 02-08

Duplicate: ☐

SAMPLING DATA:

Date: 7/26/01	Color	pH	S.C.	Temp.	Turbidity	DO	ORP
Time: 1520	(Visual)	(SU)	(mS/cm)	(°C)	(NTU)	(Meter, mg/l)	mV
Method: Low Flow,	CLEAR	6.12	2.573	17.4	1.8	9.85	481

SAMPLE COLLECTION/ANALYSIS INFORMATION:

Divalent Iron: as Fe^{+2}, Range 0 - 3 mg/L

Equipment: HACH DR-850 COLORIMETER

Analysis Time: 1556 @well

Concentration: 0.00 mg/L

Notes:

Carbon Dioxide: CO_2, Dissolved, Range 10 - 2500 ppm

Equipment: Chemetrics Test Kit

Analysis Time: 1534

Range Used:	Range	Concentration ppm
☐	10 to 100 ppm	
☑	100 to 1000 ppm	250 ppm
☐	250 to 2500 ppm	

Concentration: 250 ppm @ well

Notes:

Dissolved Oxygen: O_2, Range 0 - 12 ppm

Equipment: Chemetrics Test Kit

Analysis Time: 1524 @well

Range Used:	Range	Concentration ppm
☐	0 to 1 ppm	
☑	1 to 12 ppm	2.5 ppm

Concentration: 2.5 ppm

Notes:

Hydrogen Sulfide: as H_2S, Range 0 - 5

Equipment: HACH HS-C

Analysis Time: 1534 @ well

Concentration: 0 mg/L

Notes:

KWH

SAMPLE LOG SHEET
NATURAL ATTENUATION PARAMETERS

Tetra Tech NUS, Inc.

Project Site Name: NSWC Crane - DBG

Project No.: CTO 10 # 7141

Sampled By: T. R.

Sample ID No.: 02GW0801

Sample Location: 02-01

Duplicate: ☐

SAMPLE COLLECTION/ANALYSIS INFORMATION:

Alkalinity: total, as $CaCO_3$, Range 10 to 1000 ppm

Equipment: Chemetrics Test Kit

Analysis Time: 1545

Range Used:	Range	Concentration ppm
☐	10 to 100 ppm	
☑	50 to 500 ppm	500ppm
☐	100 to 1000 ppm	

Concentration: 500 ppm @ well

Notes:

Sulfide: S^{2-}, Range 0-0.7 mg/L

Equipment: HACH DR-850 Colorimeter

Program No.: 93

Concentration: 0.05 mg/L

Analysis Time: 1604 @ well

Notes:

Nitrite: NO_2^--N, Range 0-0.35 mg/L

Equipment: HACH DR-850 Colorimeter

Program No.: 62

Concentration: 0.006 mg/L

Analysis Time: 1726

Notes: Alternate forms: NO_2 0.020 $NaNO_2$ 0.029

Nitrate: NO_3^--N, Range 0 - 0.50 mg/L

Equipment: HACH DR-850 Colorimeter

Program No.: 55

Concentration: 0.01 mg/L

Analysis Time: 1804

Nitrite Interference Treatment: ☑

If results are over limit use dilution method at step 3, 5ml sample 10ml DI result X3, range upto 1.5mg/L

Notes: Alternate form: NO_3 0.06

KWH

GROUND WATER SAMPLE LOG FORM

Project Site Name: NSWC CRANE, IN
Project No.: CTO 10 N7141

Sample ID No.: 02GWC10P301
Sample Location: 02C10P3 (Alt 03 P3-
Sampled By: K. Hewn / T. Rogers)
C.O.C. No.: 02398E02400

SAMPLING DATA:

	Color	pH	S.C.	Temp.	Turbidity	DO	ORP	Odor
Date: 7/28/01	Visual	Standard	mS/cm	Degrees C	NTU	mg/l	mV	
Time-Start: 1035 End: 1348	Clear	5.60	0.278	15.76	10	1.12	412.0	NONE
Method: Low Flow								

PURGE DATA:

Date: 7/28/01	Total Well Depth (TD): 37.5	End Purge (hrs): 1020
Method: Low Flow	Static Water Level (WL): 29.47	Total Purge Time (min): 102 min
Well Casing: 2" PVC	Start Purge (hrs): 0838	Total Vol. Purged (gal): 2.34 gal
One Casing Volume(gal): 1.30 gal		

SAMPLE COLLECTION INFORMATION:

Analysis	Preservative	Container Requirements	Collected
APX IX Total Metals plus Al, Ca, Fe, Mg, Mn, K, Na	HNO_3/4°C	(1) 1000 mL Polyethylene	✓
APX IX Dissolved Metals plus Al, Ca, Fe, Mg, Mn, K, Na	HNO_3/4°C	(1) 1000 mL Polyethylene	
TOC	H_2PO_4/4°C	(2) 40 ml vial	✓
TSS, Sulfate, Chloride	4°C	(1) 1000 mL Polyethylene	✓
Dyes	4°C	2 (~~2~~) 1000 ml amber glass	✓
NA (field only)	4°C	(1) 500 mL Polyethylene	✓
		X VOL COLLECTED	
Note: Dissolve metals only collected if Turb. is >10 NTUs		FOR MS/MSD + DUP	

OBSERVATIONS / NOTES:

PID reading in PVC riser pipe = 0 (ppm)
PID reading in Breathing Zone = 0 (ppm)

Pump set at 34.5' below TOC
- rain started @ 1000 hrs

QA Samples Collected:

MS/MSD	Duplicate ID No.:
✓	FD07280101

Signature(s): [signature]

LOW FLOW PURGE DATA SHEET

PROJECT SITE NAME: NSWC Crane, IN
PROJECT NUMBER: 7141 ETO 10

WELL ID.: 02C10P3 (aka 0210CP3-88)
DATE: 7/28/01

Time (Hrs.)	Water Level (Ft. below TOC)	Pump Rate (mL/Min.)	pH (S.U.)	S. Cond. (mS/cm)	Turb. (NTU)	DO (mg/L)	Temp. (Celcius)	ORP mV	Cumulative Volume	Comments
0838	29.47									Start pumping (Adjusting pump rate)
0850	29.66	70 to 85	5.63	0.296	45	3.20	17.52	402.0	0.84L	~~(0.22 gal)~~ OK
0900	29.72	85	5.46	0.286	50	1.61	15.90	385.5	1.68L	(0.44 gal)
0910	29.71	90	5.35	0.280	50	1.43	16.03	370.6	2.58L	(0.68 gal)
0920	29.75	90	5.24	0.279	45	1.25	15.92	387.5	3.48L	(0.92 gal)
0930	29.74	90	5.23	0.277	50	1.22	15.87	395.4	4.38L	(1.15 gal)
0940	29.75	90	5.33	0.277	36	1.21	15.73	404.5	5.28L	(1.39 gal)
0950	29.79	90	5.40	0.278	30	1.15	15.35	409.8	6.18L	(1.63 g)
1000	29.80	90	5.48	0.278	22	1.15	15.61	413.6	7.08L	(1.87 gal) ← stabilized
1010	29.80	90	5.56	0.278	14	1.11	15.66	413.6	7.98	(2.1 gal) ←
1020	29.80	90	5.50	0.278	10	1.12	15.76	412.8	8.88	(2.34 gal)

SIGNATURE: [illegible]

SAMPLE LOG SHEET
NATURAL ATTENUATION PARAMETERS

Tetra Tech NUS, Inc.

Project Site Name: NSWC Crane - DBG

Project No.: CTO 10 # 7141

Sampled By: K. Henn

Sample ID No.: 02GWC10P301

Sample Location: 02C10P3

Duplicate: ☑ (AKA 02C10P3-88)

SAMPLING DATA:

Date: 7/28/01 Time: 1025	Color (Visual)	pH (SU)	S.C. (mS/cm)	Temp. (°C)	Turbidity (NTU)	DO (Meter, mg/l)	ORP mV
Method: Low Flow.	clear	5.50	0.778	15.76	10	1.12	412.0

SAMPLE COLLECTION/ANALYSIS INFORMATION:

Divalent Iron: as Fe^{+2}, Range 0 - 3 mg/L

Equipment: HACH DR-850 COLORIMETER

Analysis Time: 1225 @well

Concentration: 1.70 mg/L

Dup → 1.89

Notes:

Carbon Dioxide: CO_2, Dissolved, Range 10 - 2500 ppm

Equipment: Chemetrics Test Kit

Analysis Time: 1146 @well

Range Used:	Range	Concentration ppm
☐	10 to 100 ppm	
☑	100 to 1000 ppm	140
☐	250 to 2500 ppm	

Dup ↓ 152

Concentration: 152 ppm

Notes:

Dissolved Oxygen: O_2, Range 0 - 12 ppm

Equipment: Chemetrics Test Kit

Analysis Time: 1056 @ well

Range Used:	Range	Concentration ppm
☑	0 to 1 ppm	0.5 ppm
☑	1 to 12 ppm	<1.0 ppm

Dup 2nd ↓ 0.6 <1.0 ppm

Concentration: 0.6 ppm

Notes:

Hydrogen Sulfide: as H_2S, Range 0 - 5

Equipment: HACH HS-C

Analysis Time: 1110 @ well

Concentration: 0.00 mg/L

Dup → 0.00 mg/L

Notes:

Tetra Tech NUS, Inc.

SAMPLE LOG SHEET
NATURAL ATTENUATION PARAMETERS

Project Site Name: NSWC Crane - DBG

Project No.: CTO 10 # 7141

Sampled By: M. Hern / T. Rojahn

Sample ID No.: 026WC10PZ01

Sample Location: 02C10PZ

Duplicate: ☑

SAMPLE COLLECTION/ANALYSIS INFORMATION:

Alkalinity: total, as $CaCO_3$, Range 10 to 1000 ppm

Equipment: Chemetrics Test Kit

Analysis Time: 1210

Range Used:	Range	Concentration ppm
☑	10 to 100 ppm	70
☐	50 to 500 ppm	
☑	100 to 1000 ppm	<100

Dup ↓ 70

Concentration: 70 ppm

Notes:

Sulfide: S^{2-}, Range 0-0.7 mg/L

Equipment: HACH DR-850 Colorimeter

@ well

Analysis Time: 1236

Program No.: 93

Concentration: 0.01 mg/L

Notes: Dup → 0.04

Nitrite: NO_2^--N, Range 0-0.35 mg/L

7.29.01

Equipment: HACH DR-850 Colorimeter

Analysis Time: 0715

Program No.: 62

Concentration: 0.001 mg/L DUP = 0.000 mg/L

Notes: Alternate forms: NO_2 0.004 $NaNO_2$ 0.006 mg/L DUP NO_2 0.000 $NaNO_2$ 0.000 mg/L

Nitrate: NO_3^--N, Range 0 - 0.50 mg/L

7.29.01

Equipment: HACH DR-850 Colorimeter

Analysis Time: 0805

Program No.: 55

Concentration: 0.00 mg/L DUP 0.01 mg/L

Nitrite Interference Treatment: ☐

If results are over limit use dilution method at step 3, 5ml sample 10ml DI result X3, range upto 1.5mg/L

Notes: Alternate form: NO_3 0.01 mg/L DUP 0.03 mg/L

GROUND WATER SAMPLE LOG FORM

Project Site Name: NSWC CRANE, IN
Project No.: CTO 10 N7141

Sample ID No.: 02GWC11P30
Sample Location: 02C11P3
Sampled By: K. Henn / K. Simpson
C.O.C. No.: 02396 E 02398

SAMPLING DATA:

	Color	pH	S.C.	Temp.	Turbidity	DO	ORP	Odor
Date: 7/27/01	Visual	Standard	mS/cm	Degrees C	NTU	mg/l	mV	
Time-Start: 0950 End: 1059								
Method: low flow	Clear	3.68	1.559	13.26	2.1	8.18	476.3	None

PURGE DATA:

Date: 7/27/01	Total Well Depth (TD): 45.8	End Purge (hrs): 0950
Method: low flow	Static Water Level (WL): ~~36.0~~ 35.89	Total Purge Time (min): 95 (1:35 hr)
Well Casing: 2" PVC 2.10	Start Purge (hrs): 0815	Total Vol. Purged (gal): 2.30
One Casing Volume(gal): ~~1.54~~ gal		

SAMPLE COLLECTION INFORMATION:

Analysis	Preservative	Container Requirements	Collected
APX. IX Total Metals plus Al, Ca, Fe, Mg, Mn, K, Na	HNO_3/4°C	(1) 1000 mL Polyethylene	✓
APX. IX Dissolved Metals plus Al, Ca, Fe, Mg, Mn, K, Na	HNO_3/4°C	(1) 1000 mL Polyethylene	
TOC	H_3PO_4/4°C	(2) 40 ml vial	✓
TSS, Sulfate, Chloride	4°C	(1) 1000 mL Polyethylene	✓
Dyes	4°C KW 2	(~~2~~) 1000 ml amber glass	✓
NA (field only)	4°C	(1) 500 mL Polyethylene	✓
Note: Dissolve metals only collected if Turb. is >10 NTUs			

OBSERVATIONS / NOTES:

PID reading in PVC riser pipe = 0 (ppm)
PID reading in Breathing Zone = 0 (ppm)

QA Samples Collected:

MS/MSD	Duplicate ID No.:
—	—

Signature(s): [signature]

9.8 ft of water

LOW FLOW PURGE DATA SHEET

PROJECT SITE NAME: NSWC Crane, IN
PROJECT NUMBER: 7141

WELL ID.: 02 C 11 P3
DATE: 7/27/01

Time (Hrs.)	Water Level (Ft. below TOC)	Pump Rate (mL/Min.)	pH (S.U.)	S. Cond. (mS/cm)	Turb. (NTU)	DO (mg/L)	Temp. (Celcius)	ORP mV	Comments cumulative ~~flow~~ volume
	35.89								
0815	~~39.11~~ 36.0	~120	4.09	1.629		7.09	14.27	415	start of pumping
0823	36.85	105	3.69	1.607	12	6.89	14.18	432.2	0.84 L
0829	36.88	110	3.91	1.598	12	7.01	14.50	451.7	1.4 L
0840	36.92	105	3.87	1.598	6.9	7.72	14.58	455.6	2.63 L (0.69 gal)
0850	36.99	105	3.80	1.586	4.0	8.29	14.61	465.6	3.63 L
0900	36.97	80	3.79	1.574	2.1	8.28	14.94	468.1	4.43 L (1.17 gal)
0910	36.95	85	3.80	1.567	2.1	8.23	15.28	468.9	5.28 L (1.39 gal)
0920	36.95	85	3.76	1.569	2.4	8.35	15.33	471.9	6.08 L (1.61 gal)
0930	36.94	88	3.72	1.562	2.2	8.29	15.35	474.4	6.96 L (1.86 gal)
0940	36.94	88	3.69	1.561	2.2	8.17	15.28	476.2	7.84 L (2.07 gal)
0950	36.94	88	3.68	1.559	2.1	8.18	15.26	476.3	8.72 L (2.30 gal)

min purge volume = 2.10

@85 mL/min (.0225 gal/min) pump for 93 min to get min purge volume

SIGNATURE: Keith W. Y

PAGE 1 OF ___

SAMPLE LOG SHEET
NATURAL ATTENUATION PARAMETERS

Tetra Tech NUS, Inc.

Project Site Name: NSWC Crane - DBG

Project No.: CTO 10 # 7141

Sampled By: K. Hern / K. Simpson

Sample ID No.: 02GWC11P301

Sample Location: 02 C11 P3

Duplicate: ☐

SAMPLING DATA:

Date: 7/27/01 Time: 0950	Color (Visual)	pH (SU)	S.C. (mS/cm)	Temp. (°C)	Turbidity (NTU)	DO (Meter, mg/l)	ORP mV
Method: Low Flow.	clear	3.68	1.559	15.26	0.1	8.18	476.3

SAMPLE COLLECTION/ANALYSIS INFORMATION:

Divalent Iron: as Fe^{+2}, Range 0 - 3 mg/L

Equipment: HACH DR-850 COLORIMETER

Analysis Time: 1052 @ well

Concentration: 1.05 mg/L

Notes:

Carbon Dioxide: CO_2, Dissolved, Range 10 - 2500 ppm

Equipment: Chemetrics Test Kit

Analysis Time: 1014

Range Used:	Range	Concentration ppm
☐	10 to 100 ppm	
☑	100 to 1000 ppm	380
☐	250 to 2500 ppm	

Concentration: 380 ppm @ well

Notes:

Dissolved Oxygen: O_2, Range 0 - 12 ppm

Equipment: Chemetrics Test Kit

Analysis Time: 1007 @ well

Range Used:	Range	Concentration ppm
☑	0 to 1 ppm	1.0 ppm
☑	1 to 12 ppm	< 1.0 ppm

Concentration: 1.0 ppm

Notes:

Hydrogen Sulfide: as H_2S, Range 0 - 5

Equipment: HACH HS-C

Analysis Time: 1022 @ well

Concentration: 0.0 mg/L

Notes:

SAMPLE LOG SHEET
NATURAL ATTENUATION PARAMETERS

Tetra Tech NUS, Inc.

Project Site Name: NSWC Crane - DBG
Project No.: CTO 10 # 7141
Sampled By: K. Hunn / K. Simpson

Sample ID No.: 026WC11P301
Sample Location: 02C11P3
Duplicate: ☐

SAMPLE COLLECTION/ANALYSIS INFORMATION:

Alkalinity: total, as $CaCO_3$, Range 10 to 1000 ppm

Equipment: Chemetrics Test Kit

Analysis Time: 1031

Range Used:	Range	Concentration ppm
☑	10 to 100 ppm	<10
☑	50 to 500 ppm	<50
☐	100 to 1000 ppm	

Concentration: <10 ppm @ well

Notes:

Sulfide: S^{2-}, Range 0-0.7 mg/L

Equipment: HACH DR-850 Colorimeter

Program No.: 93

Concentration: 0.00 mg/L

Analysis Time: 1043 @ well

Notes:

Nitrite: NO_2^--N, Range 0-0.35 mg/L

Equipment: HACH DR-850 Colorimeter

Program No.: 62

Concentration: 0.005 mg/L

Analysis Time: 1201 at office

Notes: Alternate forms: NO_2 0.016 $NaNO_2$ 0.024

Nitrate: NO_3^--N, Range 0 - 0.50 mg/L

Equipment: HACH DR-850 Colorimeter

Program No.: 55

Concentration: 0.01 mg/L

Analysis Time: 1305

Nitrite Interference Treatment: ☑

If results are over limit use dilution method at step 3, 5ml sample 10ml DI result X3, range upto 1.5mg/L

Notes: Alternate form: NO_3 0.04 mg/L

KES

KWH

GROUND WATER SAMPLE LOG FORM

Project Site Name: NSWC CRANE, IN
Project No.: CTO 10 N7141

Sample ID No.: 02GWC12P301
Sample Location: 02C12P3
Sampled By: R. SIMPSON
C.O.C. No.: 02391 & 02393

SAMPLING DATA:

Date: 7.25.01	Color	pH	S.C.	Temp.	Turbidity	DO	ORP	Odor
Time-Start 0950 End: 1100	Visual	Standard	mS/cm	Degrees C	NTU	mg/l	mV	
Method: SAME	CLEAR	5.61	2.353	18.4	4.6	10.79	483	NONE

PURGE DATA:

Date: 7.25.01	Total Well Depth (TD): 37.4	End Purge (hrs): 0950
Method: LOW FLOW BLADDER	Static Water Level (WL): 23.68	Total Purge Time (min): 100
Well Casing: 2" PVC	Start Purge (hrs): 0810	Total Vol. Purged (gal): 2.3
One Casing Volume(gal): 2.2		

SAMPLE COLLECTION INFORMATION:

Analysis	Preservative	Container Requirements	Collected
APX IX Total Metals plus Al, Ca, Fe, Mg, Mn, K, Na	HNO_3/4°C	(1) 1000 mL Polyethylene	✓
~~APX IX Dissolved Metals plus Al, Ca, Fe, Mg, Mn, K, Na~~	~~HNO_3/4°C~~	~~(1) 1000 mL Polyethylene~~	
TOC	H_3PO_4/4°C	(2) 40 ml vial	✓
TSS, Sulfate, Chloride	4°C	(1) 1000 mL Polyethylene	✓
Dyes	4°C	2 ~~(1)~~ 1000 ml amber glass RS	✓
NA (field only)	4°C	(1) 500 mL Polyethylene	✓
Note: Dissolve metals only collected if Turb. is >10 NTUs			

OBSERVATIONS / NOTES:

PID reading in PVC riser pipe = 0 (ppm)
PID reading in Breathing Zone = 0 (ppm)

PUMP SET @ 35'±

QA Samples Collected:

MS/MSD	Duplicate ID No.:
—	—

Signature(s): [illegible]

100± MIN @ 85 ML/MIN = 1 VOL

LOW FLOW PURGE DATA SHEET

PROJECT SITE NAME: NSWC Crane, IN
PROJECT NUMBER: DBG #7141

WELL ID.: 02 C12P3
DATE: 7.25.01

Time (Hrs.)	Water Level (Ft. below TOC)	Pump Rate (mL/Min.)	pH (S.U.)	S. Cond. (mS/cm)	Turb. (NTU)	DO (mg/L)	Temp. (Celcius)	ORP mV	Comments
0810	23.68	200							START PURGE
0816	24.30	100	5.97	2.215	7.1	8.90	16.7	364	CLEAR, NO ODOR
0825	24.35	90	5.89	2.214	5.2	12.39	17.6	437	
0835	24.50	90	5.84	2.221	2.8	12.38	17.8	465	
0845	24.55	80	5.81	2.418	7.6	10.64	18.2	475	
0855	24.67	↑	5.78	2.558	14	9.65	18.3	448	
0905	24.72		5.76	2.555	10.2	9.99	18.3	445	
0915	24.81		5.72	2.522	9.4	9.64	18.3	450	
0925	24.90		5.66	2.443	8.6	10.48	18.3	463	
0935	24.98		5.65	2.377	8.0	10.69	18.4	473	
0940	25.06		5.62	2.358	6.6	10.75	18.4	475	1 VOL REMOVED
0945	25.05		5.63	2.357	5.0	10.77	18.4	481	
0950	25.08	↓	5.61	2.353	4.6	10.79	18.4	483	END PURGE

SIGNATURE: [illegible]

Tetra Tech NUS, Inc.

SAMPLE LOG SHEET
NATURAL ATTENUATION PARAMETERS

Project Site Name: NSWC Crane - DBG

Project No.: CTO 10 # 7141

Sampled By: K. SIMPSON

Sample ID No.: 02GWC12P3

Sample Location: 02C12P3

Duplicate: ☐

SAMPLING DATA:

Date: 7-25-01	Color	pH	S.C.	Temp.	Turbidity	DO	ORP
Time:	(Visual)	(SU)	(mS/cm)	(°C)	(NTU)	(Meter, mg/l)	mV
Method: Low Flow, BLADDER	CLEAR	5.61	2.353	18.4	4.6	10.79	483

SAMPLE COLLECTION/ANALYSIS INFORMATION:

Divalent Iron: as Fe^{+2}, Range 0 - 3 mg/L

Equipment: HACH DR-850 COLORIMETER

Analysis Time: 1023

Concentration: 0.05 mg/L

Notes: @ WELL

Carbon Dioxide: CO_2, Dissolved, Range 10 - 2500 ppm

Equipment: Chemetrics Test Kit

Analysis Time: 1003

Range Used:	Range	Concentration ppm
☐	10 to 100 ppm	
☑	100 to 1000 ppm	225
☐	250 to 2500 ppm	

Concentration: 225 ppm

Notes: @ WELL

Dissolved Oxygen: O_2, Range 0 - 12 ppm

Equipment: Chemetrics Test Kit

Analysis Time: 0958

Range Used:	Range	Concentration ppm
☐	0 to 1 ppm	
☑	1 to 12 ppm	2.0

Concentration: 2.0 ppm

Notes:

Hydrogen Sulfide: as H_2S, Range 0 - 5

Equipment: HACH HS-C

Analysis Time: 0953

Concentration: 0 mg/L

Notes: @ WELL

KRS

SAMPLE LOG SHEET
NATURAL ATTENUATION PARAMETERS

Tetra Tech NUS, Inc.

Project Site Name: NSWC Crane - DBG
Project No.: CTO 10 # 7141
Sampled By: K. SIMPSON

Sample ID No.: 02GWC12P301
Sample Location: 02C12P3
Duplicate: ☐

SAMPLE COLLECTION/ANALYSIS INFORMATION:

Alkalinity: total, as $CaCO_3$, Range 10 to 1000 ppm

Equipment: Chemetrics Test Kit

Analysis Time: 1015

Range Used:	Range	Concentration ppm
☐	10 to 100 ppm	
☑	50 to 500 ppm	65
☐	100 to 1000 ppm	

Concentration: 65 ppm

Notes: @ WELL

Sulfide: S^{2-}, Range 0-0.7 mg/L

Equipment: HACH DR-850 Colorimeter

Analysis Time: 1135

Program No.: 93

Concentration: 0.01 mg/L

Notes:

Nitrite: NO_2^--N, Range 0-0.35 mg/L

Equipment: HACH DR-850 Colorimeter

Analysis Time: 1145

Program No.: 62

Concentration: 0 mg/L

Notes: Alternate forms: NO_2 0 $NaNO_2$ 0

Nitrate: NO_3^--N, Range 0 - 0.50 mg/L

Equipment: HACH DR-850 Colorimeter 0.36 x 3 = mg/L

Analysis Time: 1310

Program No.: 55

Concentration: 1.08 mg/L

— RAN 3X DILUTION —

Nitrite Interference Treatment: ☐

If results are over limit use dilution method at step 3, 5ml sample 10ml DI result X3, range upto 1.5mg/L

Notes: Alternate form: NO_3 4.74 mg/L

1ST RUN > 0.55 LIMIT @ 1300

K S

APPENDIX B.3

SURFACE WATER SAMPLE LOG SHEETS

SURFACE WATER SAMPLE LOG FORM

Project Site Name: NSWC CRANE, IN
Project No.: CTO 10 job N7141

[] Stream
[] Spring

Sample ID No.: 025W0701
Sample Location: 025W/SD07
Sampled By: K. SIMPSON
C.O.C. No.: 02400 & 072901

SAMPLING DATA:

Date: 7-29-01 / Sample Time: 1350 / Depth: 0-4" / Method: Direct Fill	Color Visual	pH Standard	S.C. mS/cm	Temp. Degrees C	Turbidity NTU	DO mg/l	ORP mV	Odor
	CLEAR	5.33	0.455	14.2	25	~~12~~ RS 12	533	NONE

SAMPLE COLLECTION INFORMATION: 9.67

Analysis	Preservative	Container Requirements		Collected
APX. IX Total Metals plus Al, Ca, Fe, Mg, Mn, K, Na	HNO_3/4°C	(1) 1000 mL Polyethylene	3	✓
APX. IX Dissolved Metals plus Al, Ca, Fe, Mg, Mn, K, Na	HNO_3/4°C	(1) 1000 mL Polyethylene	3	✓
TOC	H_3PO_4/4°C	(2) 40 ml vial	8	✓
TSS, Hardness	4°C	(1) 1000 mL Polyethylene	3	✓
Dyes	4°C	(6) 1000 ml amber glass	7	✓
~~NA (field only)~~	~~4°C~~	~~(1) 500 mL Polyethylene~~		
		X VOL FOR DUP + MS/MSD		

OBSERVATIONS / NOTES:

Estimated Flow Rate (GPM): 3 OR LESS

A SLIGHT AMOUNT OF SOLIDS WERE STIRRED UP DURING THE SW SAMPLING

Comments:

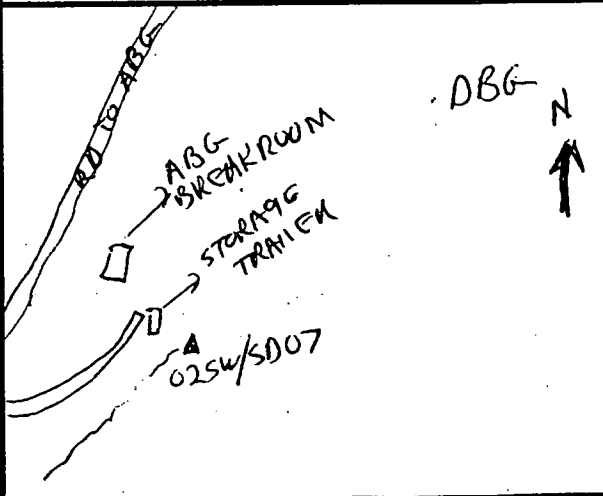

QA Samples Collected:

MS/MSD	Duplicate ID No.:
YES	FD 072901 01

Signature(s):

APPENDIX B.4

SEDIMENT SAMPLE LOG SHEETS

SEDIMENT SAMPLE LOG SHEET

Project Site Name: NSWC Crane, IN
Project No.: CTO 10 job # N7141

[] Surface Soil
[] Subsurface Soil
[X] Sediment
[] Other:
[] QA Sample Type:

Sample ID No.: 02SD01 0006
Sample Location: 02SD01
Sampled By: RS - TR
C.O.C. No.: 02398 & 02399

Type of Sample:
[X] Low Concentration
[] High Concentration

GRAB SAMPLE DATA:

	Depth	Color	Description (Sand, Silt, Clay, Moisture, etc.)
Date: 7-27-01 Time: 1104 Method: PLASTIC TRUCK Monitor Reading (ppm): 0	0-6"	BRN	MOIST, TR. ROOTS, SILT TR F. SAND, TR SANDSTONE FRAGS

COMPOSITE SAMPLE DATA:

Date:	Time	Depth	Color	Description (Sand, Silt, Clay, Moisture, etc.)
Method:				
Monitor Readings (Range in ppm):				

SAMPLE COLLECTION INFORMATION:

Analysis	Container Requirements	Collected	Other
APX. IX Total Metals plus Al, Ca, Fe, Mg, Mn, K, Na	(1) 8 oz. Glass	✓	Laucks
Dyes	(1) 8 oz glass	✓	Crane lab
~~Grain Size & Bulk~~ Density	~~(1) 8 oz glass~~		~~Crane lab~~
Add: pH, CEC, TOC to 30% of samples (add to metals)			

OBSERVATIONS / NOTES:

DRY STREAM BED - (NO FLOW)

MIXED IN-SITU 0→6"

MAP:

SEE FIGURE 5-19

Circle if Applicable:

MS/MSD	Duplicate ID No.:

Signature(s):

SEDIMENT SAMPLE LOG SHEET

Project Site Name: NSWC Crane, IN
Project No.: CTO 10 job # N7141

[] Surface Soil
[] Subsurface Soil
[X] Sediment
[] Other:
[] QA Sample Type:

Sample ID No.: 02SD 02 0006
Sample Location: 02SD 02 ~~0006~~ TR
Sampled By: TR - KS
C.O.C. No.: 02398E02396

Type of Sample:
[X] Low Concentration
[] High Concentration

GRAB SAMPLE DATA:

	Depth	Color	Description (Sand, Silt, Clay, Moisture, etc.)
Date: 6.27.01 Time: 0950 Method: PLASTIC TROWEL Monitor Reading (ppm): 0	0-6"	BRN	MOIST, TR ROOTS SILT, TR ROCK FRAGS. (SAND'STONE) TR TO NO F. SAND

COMPOSITE SAMPLE DATA:

Date:	Time	Depth	Color	Description (Sand, Silt, Clay, Moisture, etc.)
Method:				
Monitor Readings (Range in ppm):				

SAMPLE COLLECTION INFORMATION:

Analysis	Container Requirements	Collected	Other
APX. IX Total Metals plus Al, Ca, Fe, Mg, Mn, K, Na	(1) 8 oz. Glass	3	Laucks
Dyes	(1) 8 oz glass	4	Crane lab
~~Grain Size & Bulk Density~~	~~(1) 8 oz glass~~		~~Crane lab~~
~~Add. pH, CEC, TOC to 30% of samples (add to metals)~~			

OBSERVATIONS / NOTES:

GOOD SAMPLE LOCATION IN DRY STREAM BED. (NO FLOW) MIXED IN-SITU 0-6"

USED PLASTIC TROWEL

MAP:

X VOL COLLECTED FOR DUP & MS/MSD

50 YARDS ± NORTH OF MW 02C15/02C15P2

SEE FIGURE 5-19

Circle if Applicable:

MS/MSD	Duplicate ID No.:
YES	FD072701 01

Signature(s):

SEDIMENT SAMPLE LOG SHEET

Project Site Name: NSWC Crane, IN
Project No.: CTO 10 job # N7141

[] Surface Soil
[] Subsurface Soil
[X] Sediment
[] Other:
[] QA Sample Type:

Sample ID No.: 02SD03 0006
Sample Location: 02SD 03
Sampled By: KS-TR
C.O.C. No.: 02398 E02399

Type of Sample:
[X] Low Concentration
[] High Concentration

GRAB SAMPLE DATA:

	Depth	Color	Description (Sand, Silt, Clay, Moisture, etc.)
Date: 7.27.01 Time: 1020 Method: PLASTIC TROWEL Monitor Reading (ppm): 0	0 - 6"	BRN	MOIST TR ROOTS, SILT, TR F. SAND & CLAY TR ~~LIME~~ STONE FRAGS. SAND KS

COMPOSITE SAMPLE DATA:

Date:	Time	Depth	Color	Description (Sand, Silt, Clay, Moisture, etc.)
Method:				
Monitor Readings (Range in ppm):				

SAMPLE COLLECTION INFORMATION:

Analysis	Container Requirements	Collected	Other
APX. IX Total Metals plus Al, Ca, Fe, Mg, Mn, K, Na	(1) 8 oz. Glass	/	Laucks
Dyes	(1) 8 oz glass	/	Crane lab
~~Grain Size & Bulk Density~~	~~(1) 8 oz glass~~		~~Crane lab~~
~~Add: pH, CEC, TOC to 30% of samples (add to metals)~~			

OBSERVATIONS / NOTES:

DRY STREAM BED - (NO FLOW)
MIXED IN-SITU 0-6"

USED PLASTIC & STAINLESS STEEL TROWELS

MAP:

SEE FIGURE 5-19

Circle if Applicable:

MS/MSD	Duplicate ID No.:

Signature(s):

SEDIMENT SAMPLE LOG SHEET

Project Site Name: NSWC Crane, IN
Project No.: CTO 10 job # N7141

[] Surface Soil
[] Subsurface Soil
[X] Sediment
[] Other:
[] QA Sample Type:

Sample ID No.: 02SD 040006
Sample Location: 02SD 04~~0006~~ (TR)
Sampled By: KS - TR
C.O.C. No.: 02398 & 02400

Type of Sample:
[X] Low Concentration
[] High Concentration

GRAB SAMPLE DATA:

	Depth	Color	Description (Sand, Silt, Clay, Moisture, etc.)
Date: 7.27.01 Time: 1600 Method: STAINLESS TRAVEL Monitor Reading (ppm): 0	0 - 6"	RED BRN & GRAY	DAMP, TR ROOT + ORGANIC MATERIAL, SILT, TR F. SAND

COMPOSITE SAMPLE DATA:

Date:	Time	Depth	Color	Description (Sand, Silt, Clay, Moisture, etc.)
Method:				
Monitor Readings (Range in ppm):				

SAMPLE COLLECTION INFORMATION:

Analysis	Container Requirements	Collected	Other
APX. IX Total Metals plus Al, Ca, Fe, Mg, Mn, K, Na	(1) 8 oz. Glass	✓	Laucks
Dyes	(1) 8 oz glass	✓	Crane lab
~~Grain Size & Bulk Density~~	~~(1) 8 oz glass~~		~~Crane lab~~
~~Add: pH, CEC, TOC to 30%~~ of samples (add to metals)			

OBSERVATIONS / NOTES:

MIXED IN-SITU 0→6"

NO FLOW, SOME SMALL PONDED AREAS

MAP:

SEE FIGURE 5-19

Circle if Applicable:

MS/MSD	Duplicate ID No.:

Signature(s):

SEDIMENT SAMPLE LOG SHEET

Project Site Name: NSWC Crane, IN
Project No.: CTO 10 job # N7141

[] Surface Soil
[] Subsurface Soil
[X] Sediment
[] Other:
[] QA Sample Type:

Sample ID No.: 02SD050006
Sample Location: 02SD05 ~~0006~~ TK
Sampled By: TR. RS
C.O.C. No.: 02398 & 2400

Type of Sample:
[X] Low Concentration
[] High Concentration

GRAB SAMPLE DATA:

	Depth	Color	Description (Sand, Silt, Clay, Moisture, etc.)
Date: 7.27.01 Time: 1520 Method: S.S. Trowel Monitor Reading (ppm): 0	0-6"	BRN	MOIST TR ROOTS SILT SOME SAND & GRAVEL

COMPOSITE SAMPLE DATA:

	Time	Depth	Color	Description (Sand, Silt, Clay, Moisture, etc.)
Date:				
Method:				
Monitor Readings (Range in ppm):				

SAMPLE COLLECTION INFORMATION:

Analysis	Container Requirements	Collected	Other
APX. IX Total Metals plus Al, Ca, Fe, Mg, Mn, K, Na	(1) 8 oz. Glass	✓	Laucks
Dyes	(1) 8 oz glass	✓	Crane lab
~~Grain Size & Bulk Density~~	~~(1) 8 oz glass~~		~~Crane lab~~
~~Add: pH, CEC, TOC to 30% of samples (add to metals)~~			

OBSERVATIONS / NOTES:

MIXED IN-SITU 0→6"

NO FLOW - DRY STREAM BED

MAP:

SEE FIGURE 5-19

Circle if Applicable:

MS/MSD	Duplicate ID No.:
—	

Signature(s): TR / RS

SEDIMENT SAMPLE LOG SHEET

Project Site Name: NSWC Crane, IN
Project No.: CTO 10 job # N7141

[] Surface Soil
[] Subsurface Soil
[X] Sediment
[] Other:
[] QA Sample Type:

Sample ID No.: 02SD06 0006
Sample Location: 02SD06 0006
Sampled By: RS-TR
C.O.C. No.: 02398 & 02400

Type of Sample:
[X] Low Concentration
[] High Concentration

GRAB SAMPLE DATA:

	Depth	Color	Description (Sand, Silt, Clay, Moisture, etc.)
Date: 7.27.01 Time: 1505 Method: PLASTIC TRAVEL Monitor Reading (ppm): 0	0-6"	BRN	MOIST, TR ROOTS SILT

COMPOSITE SAMPLE DATA:

Date:	Time	Depth	Color	Description (Sand, Silt, Clay, Moisture, etc.)
Method:				
Monitor Readings (Range in ppm):				

SAMPLE COLLECTION INFORMATION:

Analysis	Container Requirements	Collected	Other
APX. IX Total Metals plus Al, Ca, Fe, Mg, Mn, K, Na	(1) 8 oz. Glass	✓	Laucks
Dyes	(1) 8 oz glass	✓	Crane lab
~~Grain Size & Bulk Density~~	~~(1) 8 oz glass~~		~~Crane lab~~
~~Add: pH, OEC, TOC to 80% of samples (add to metals)~~			

OBSERVATIONS / NOTES:

MIXED IN-SITU 0→6"

NO FLOW - DRY STREAM BED

MAP:

SEE FIGURE 5-19

Circle if Applicable:

MS/MSD	Duplicate ID No.:

Signature(s):

SEDIMENT SAMPLE LOG SHEET

Project Site Name: NSWC Crane, IN
Project No.: CTO 10 job # N7141

[] Surface Soil
[] Subsurface Soil
[X] Sediment
[] Other:
[] QA Sample Type:

Sample ID No.: 02SD 07 0006
Sample Location: 02SW/SD 07
Sampled By: R. SIMPSON
C.O.C. No.: 02400E 072901

Type of Sample:
[X] Low Concentration
[] High Concentration

GRAB SAMPLE DATA:

	Depth	Color	Description (Sand, Silt, Clay, Moisture, etc.)
Date: 7-29-01 Time: 1425 Method: PLASTIC TROWEL Monitor Reading (ppm): 0	0 - 6"	BRN, TR BLACK	SILT, TR FINE SAND TR FINE GRAVEL WET, TR ROOTS

COMPOSITE SAMPLE DATA:

Date:	Time	Depth	Color	Description (Sand, Silt, Clay, Moisture, etc.)
Method:				
Monitor Readings (Range in ppm):				

SAMPLE COLLECTION INFORMATION:

Analysis	Container Requirements	Collected	Other
APX. IX Total Metals plus Al, Ca, Fe, Mg, Mn, K, Na	(1) 8 oz. Glass	✓	Laucks
Dyes	(1) 8 oz glass	✓	Crane lab
~~Grain Size & Bulk Density~~	~~(1) 8 oz glass~~	—	~~Crane lab~~
~~Add: pH, CEC, TOC to 30% of samples (add to metals)~~			

OBSERVATIONS / NOTES:

ALSO COLLECTED 02SW0701 SAMPLE @ THIS LOCATION

MAP:

SEE 02SW07 LOG

LOCATED BEHIND ABG BREAKROOM

SEE FIGURE 5-19

Circle if Applicable:

MS/MSD

Duplicate ID No.:

Signature(s):

APPENDIX B.5

CHAIN-OF-CUSTODY RECORDS

02378

CHAIN OF CUSTODY RECORD

PROJECT NO.: CTO 10 # 7141

SITE NAME: NSWC CRANE DBG

SAMPLERS (SIGNATURE): [signature]

STATION NO.	DATE	TIME	COMP	GRAB	STATION LOCATION	NO. OF CONTAINERS	APX 1X METALS	APX 1X METALS + Na, Al, Ca, Fe, Mn, Mg, K						REMARKS
—	7/24	0905		✓	02SS04 0001	1	1	—						* = ADD CEC, TOC & PH TO ANALYSES
—		0925		✓	02SB04 0305	1	1	—						
—		0950		✓	02SS05 0001	1	1	—						
—		1036		✓	02SB05 0809	1	1	—						
—		1058		✓	02SS08 0001	1	1	—						
—		1115		✓	02SB08 0810	1	1	—						
—		1315		✓	02SS09 0002	1	1	—						
—		1335		✓	02SB09 0709	1	1	—						
—		1345		✓	02SS10 0002	1	1	—						
—		1417		✓	02SB10 0810	1	—	1						*
—		1455		✓	02SB07 0709	1	—	1						*
FD		0000		✓	FD 07240101	1	1	—						DUP OF 02SS110001
—		1513		✓	02SS110001	1	1	—						
—	↓	1524		✓	02SB110406	1	1	—						

RELINQUISHED BY (SIGNATURE):	DATE / TIME:	RECEIVED BY (SIGNATURE):	RELINQUISHED BY (SIGNATURE):	DATE / TIME:	RECEIVED BY (SIGNATURE):
[signature]	7-25-01 1800	FEDEX			
RELINQUISHED BY (SIGNATURE):	DATE / TIME:	RECEIVED BY (SIGNATURE):	RELINQUISHED BY (SIGNATURE):	DATE / TIME:	RECEIVED BY (SIGNATURE):
RELINQUISHED BY (SIGNATURE):	DATE / TIME:	RECEIVED FOR LABORATORY BY (SIGNATURE):	DATE / TIME:	REMARKS: AB # 8286 4205 5053 TO LAUCKS LABS	

Order No. 70440 (0693)

02393

CHAIN OF CUSTODY RECORD

PROJECT NO.: CTO 10 # 7141

SITE NAME: NSWC CRANE, DBG

SAMPLERS (SIGNATURE): [illegible]

STATION NO.	DATE	TIME	COMP	GRAB	STATION LOCATION	NO. OF CONTAINERS	APX IX METALS + K, Al, Ca, Fe, Mg, Mn, Na	TOC	TSS, SULFATE, CHLORIDE				REMARKS
RB	7/24	1700		✓	RB07240101	1	1	—	—				DISPOSABLE PLASTIC TROWELL
—	7/25	0950		✓	02GWC12P301	4	1	2	1				

RELINQUISHED BY (SIGNATURE):	DATE / TIME:	RECEIVED BY(SIGNATURE):	RELINQUISHED BY (SIGNATURE):	DATE / TIME:	RECEIVED BY(SIGNATURE):
[illegible]	7-25-01 1850	FEDEX			
RELINQUISHED BY (SIGNATURE):	DATE / TIME:	RECEIVED BY (SIGNATURE):	RELINQUISHED BY (SIGNATURE):	DATE / TIME:	RECEIVED BY(SIGNATURE):
RELINQUISHED BY (SIGNATURE):	DATE / TIME:	RECEIVED FOR LABORATORY BY (SIGNATURE):	DATE / TIME:	REMARKS: AB # 8286 9205 5053 TO LAUCKS LAB	

Order No. 7044

02394

CHAIN OF CUSTODY RECORD

PROJECT NO.: CTO 10 # 7141

SITE NAME: NSWC CRANE, DBG

SAMPLERS (SIGNATURE): [signature]

STATION NO.	DATE	TIME	COMP	GRAB	STATION LOCATION	NO. OF CONTAINERS	APX IX METALS	APX IX METALS + Na, K, Al, Ca, Fe, Mn, Mg					REMARKS * = ADD CEC, TOC & PH TO ANALYSES
—	7/24	1621		✓	02SB06 0709	1	—	1					*
—	↓	1658		✓	02SB02 0810	1	—	1					*
FD	7/25	0000		✓	FD07250101	1	—	1					
—		0831		✓	02SB01 0911	2	—	2					* RUN ALSO MS/MSD
—		0851		✓	02SS03 0001	1	1	—					
—		0917		✓	02SB03 0709	1	—	1					*
—		1002		✓	02SB14 0709	1	—	1					*
—		1101		✓	02SS16 0001	1	1	—					
—		1117		✓	02SB16 0507	1	1	—					
—		1022		✓	02SS17 0001	1	1	—					
—		1034		✓	02SB17 0608	1	1	—					
—		1329		✓	02SB13 0507	1	—	1					*
—		1359		✓	02SB12 0507	1	—	1					*
—		1406		✓	02SS15 0001	1	1	—					
—	↓	A19		✓	02SB15 0608	1	—	1					*

RELINQUISHED BY (SIGNATURE):	DATE / TIME:	RECEIVED BY (SIGNATURE):	RELINQUISHED BY (SIGNATURE):	DATE / TIME:	RECEIVED BY (SIGNATURE):
[signature]	7.25.01 1850	FED EX			
RELINQUISHED BY (SIGNATURE):	DATE / TIME:	RECEIVED BY (SIGNATURE):	RELINQUISHED BY (SIGNATURE):	DATE / TIME:	RECEIVED BY (SIGNATURE):
RELINQUISHED BY (SIGNATURE):	DATE / TIME:	RECEIVED FOR LABORATORY BY (SIGNATURE):	DATE / TIME:	REMARKS: AB # 9286 9205 5053 TO LAUCKS LAB	

Order No. 70440 (0693)

02396

CHAIN OF CUSTODY RECORD

PROJECT NO.: CTO 10 # 7141

SITE NAME: NSWC CRANE, DBG

SAMPLERS (SIGNATURE): [signature]

STATION NO.	DATE	TIME	COMP	GRAB	STATION LOCATION	NO. OF CONTAINERS	APX IX METALS + K, Al, Ca, Fe, Mg, Mn, Na	TOC	TSS	SULFATE CHLORIDE	APX IX METALS + Na, Al, Ca, Fe, Mn, Mg, K 8 oz JAR		REMARKS * = ADD CEC, TOC & pH TO ANALYSES
RB	7/25	1655		✓	RB072501 01	1	1	—	—	—	—		DPT STAINLESS STEEL CUTTING SHOE
RB	↓	1700		✓	RB072501 02	4	1	2	1	—	—		BLADDER PUMP
FD		0000		✓	FD07250102	1	—	—	—	1	—		DUP OF 02SS20 0001
—		1445		✓	02SS20 0001	2	—	—	—	2	—		RUN ALSO MS/MSD
—		1506		✓	02SB20 0608	1	—	—	—	1	—		
—		1516		✓	02SS19 0001	1	—	—	—	1	—		
—		1527		✓	02SB19 0406	1	—	—	—	1	—		
—		1540		✓	02SS18 0001	1	—	—	—	1	—		
—	↓	1607		✓	02SB18 0507	1	—	—	—	1	—		
—	7/26	0935		✓	02GW05 01	4	1	2	1	—	—		
—	↓	1520		✓	02GW08 01	4	1	2	1	—	—		
—	7/27	0950		✓	02GWC11P3 01	4	1	2	1	—	—		
FD		0000		✓	FD07270101	1	—	—	—	—	1		DUP OF 02SD02 0006
—	↓	0950		✓	02SD02 0006	2	—	—	—	—	2		RUN ALSO MS/MSD

RELINQUISHED BY (SIGNATURE):	DATE / TIME:	RECEIVED BY (SIGNATURE):	RELINQUISHED BY (SIGNATURE):	DATE / TIME:	RECEIVED BY (SIGNATURE):
[signature]	7-27-01 1630	FEDEX			
RELINQUISHED BY (SIGNATURE):	DATE / TIME:	RECEIVED BY (SIGNATURE):	RELINQUISHED BY (SIGNATURE):	DATE / TIME:	RECEIVED BY (SIGNATURE):
RELINQUISHED BY (SIGNATURE):	DATE / TIME:	RECEIVED FOR LABORATORY BY (SIGNATURE):	DATE / TIME:	REMARKS: AB # 8286 9205 5064 TO LAUCKS LAB	

Order No. 70440

02397

CHAIN OF CUSTODY RECORD

PROJECT NO.: CTO 10 # 7141

SITE NAME: NSWC CRANE, DBG

SAMPLERS (SIGNATURE):

STATION NO.	DATE	TIME	COMP	GRAB	STATION LOCATION	NO. OF CONTAINERS	APX IX METALS + K, Al, Ca, Fe, Mg, Mn, Na	TOC	TSS	SULFATE	CHLORIDE	APX IX METALS + K, Al, Ca, Fe, Mg, Mn, Na			REMARKS
—	7/27	1020		✓	02SD03 0006	1	—	—	—	1					
—	↓	1104		✓	02SD01 0006	1	—	—	—	1					
RB	7/27	1250		✓	RB072701 01	KS ~~4~~ 1	1	~~2~~	1	—					STAINLESS STEEL TRUMEIRE
FD	7/25	0000		✓	FD072501 03	1	—	—	—	1					DUP OF 02SS18 0002

RELINQUISHED BY (SIGNATURE):	DATE / TIME:	RECEIVED BY(SIGNATURE):	RELINQUISHED BY (SIGNATURE):	DATE / TIME:	RECEIVED BY(SIGNATURE):
	7-27-01 1630	FEDEX			
RELINQUISHED BY (SIGNATURE):	DATE / TIME:	RECEIVED BY (SIGNATURE):	RELINQUISHED BY (SIGNATURE):	DATE / TIME:	RECEIVED BY(SIGNATURE):
RELINQUISHED BY (SIGNATURE):	DATE / TIME:	RECEIVED FOR LABORATORY BY (SIGNATURE):	DATE / TIME:	REMARKS: AB# 82 86 9205 5064 TO LAUCKS LAB	

Order No. 70440 (0693)

CHAIN OF CUSTODY RECORD

02400

PROJECT NO.: CTO 10 # 7141

SITE NAME: NSWC CRANE, DRG

SAMPLERS (SIGNATURE): [signature]

STATION NO.	DATE	TIME	COMP	GRAB	STATION LOCATION	NO. OF CONTAINERS	APX IX METALS + K, Al, Cu, Fe, Mg, Mn, Na (Al)	TOC	TSS, SULFATE, CHLORIDE	APX IX METALS + K (SULF) Al, Cu, Fe, Mg, Mn, Na	TSS, HARDNESS	APX IX DISSOLVED METALS + Al, Cu, Fe, Mg, Mn, Na	REMARKS
1	7/27	1505		✓	02SD06 0006	1	—	—	—	1	—	—	
—		1520		✓	02SD05 0006	1	—	—	—	1	—	—	
—		1600		✓	02SD04 0006	1	—	—	—	1	—	—	
—		1650		✓	02GW01 01	4	1	2	1	—	—	—	
—	7/28	1025		✓	02GWC10P301	11	2	6	3	—	—	—	RUN ALSO MS/MSD
—		1705		✓	02GW0201	4	1	2	1	—	—	—	
FD		0000		✓	FD07280101	4	1	2	1	—	—	—	DUP OF 02GWC10P301
RB	7/29	0810		✓	RB07290101	4	1	2	1	—	—	—	PE-PUMP BLADDER
FD		0000		✓	FD07290101	5	1	2	—	—	1	1	DUP OF 02SW0701
—		1350		✓	02SW0701	12	2	6	—	—	2	2	RUN ALSO MS/MSD
—		1400		✓	02GW0701	4	1	2	1	—	—	—	
—		1425		✓	02SD070006	1	—	—	—	1	—	—	

RELINQUISHED BY (SIGNATURE):	DATE / TIME:	RECEIVED BY(SIGNATURE):	RELINQUISHED BY (SIGNATURE):	DATE / TIME:	RECEIVED BY(SIGNATURE):
[signature]	7.30/1700	FEDEX			
RELINQUISHED BY (SIGNATURE):	DATE / TIME:	RECEIVED BY (SIGNATURE):	RELINQUISHED BY (SIGNATURE):	DATE / TIME:	RECEIVED BY(SIGNATURE):
RELINQUISHED BY (SIGNATURE):	DATE / TIME:	RECEIVED FOR LABORATORY BY (SIGNATURE):	DATE / TIME:	REMARKS: AB # 8286 9205 5086 TO CANCLS LAB	

Order No. 70440

[illegible]E DISSOLVED METALS ID ENDS WITH "F" [illegible]FILTERED

DYE - CRANE LAB

02389

CHAIN OF CUSTODY RECORD

PROJECT NO.: CTO 10 # 7141

SITE NAME: NSWC CRANE, DRG

SAMPLERS (SIGNATURE): [signature]

STATION NO.	DATE	TIME	COMP	GRAB	STATION LOCATION	NO. OF CONTAINERS	8 OZ GLASS DYES-SOIL						REMARKS
—	7/24	0905		✓	02SS04 0002	1	1						
—		0925		✓	02SB04 0305	1	1						
—		0950		✓	02SS05 0002	1	1						
—		1036		✓	02SB05 0809	1	1						
—		1058		✓	02SS08 0002	1	1						
—		1115		✓	02SB08 0810	1	1						
—		1315		✓	02SS09 0002	1	1						
—		1335		✓	02SB09 0709	1	1						
—		1345		✓	02SS10 0002	1	1						
—		1417		✓	02SB10 0810	1	1						
—		1455		✓	02SB07 0709	1	1						

RELINQUISHED BY (SIGNATURE):	DATE / TIME:	RECEIVED BY (SIGNATURE):	RELINQUISHED BY (SIGNATURE):	DATE / TIME:	RECEIVED BY (SIGNATURE):
[signature]	7.24.01 1540	J. Karty			
RELINQUISHED BY (SIGNATURE):	DATE / TIME:	RECEIVED BY (SIGNATURE):	RELINQUISHED BY (SIGNATURE):	DATE / TIME:	RECEIVED BY (SIGNATURE):
RELINQUISHED BY (SIGNATURE):	DATE / TIME:	RECEIVED FOR LABORATORY BY (SIGNATURE):	DATE / TIME:	REMARKS: DELIVERED TO CRANE LAB ON SITE.	

Order No. 70440 (0693)

DYE - CRANE LAB

CHAIN OF CUSTODY RECORD

02391

PROJECT NO.: CTO 10 # 7141

SITE NAME: NSWC CRANE, DBG

SAMPLERS (SIGNATURE):

STATION NO.	DATE	TIME	COMP	GRAB	STATION LOCATION	NO. OF CONTAINERS	DYE - SOIL 8oz GLASS	DYE - AG L AMBER					REMARKS
RB	7/24	1700		✓	RB07240101	2		2					DISPOSABLE PLASTIC TROWEL
—	↓	0000		✓	FD07240101	1	1	—					DUP OF 02SS110002
—		1513		✓	02SS110002	1	1	—					
—		1524		✓	02SB110406	1	1	—					
—		1621		✓	02SB060709	1	1	—					
—	↓	1658		✓	02SB020810	1	1	—					
—	7/25	0980		✓	02GWC12P301	2	—	2					
FD	↓	0000		✓	FD07250101	1	1	—					DUP OF 02SB010911
—		0831		✓	02SB010911	3	3	—					RUN ALSO MS/MSD
—		0851		✓	02SS030002	1	1						
—		0917		✓	02SB030709	1	1						
—		1002		✓	02SB140709	1	1						
—		1101		✓	02SS160002	1	1						
—	↓	1117		✓	02SB160507	1	1						

RELINQUISHED BY (SIGNATURE):	DATE / TIME:	RECEIVED BY (SIGNATURE):	RELINQUISHED BY (SIGNATURE):	DATE / TIME:	RECEIVED BY (SIGNATURE):
	7-24-91 1520	G. Karty			
RELINQUISHED BY (SIGNATURE):	DATE / TIME:	RECEIVED BY (SIGNATURE):	RELINQUISHED BY (SIGNATURE):	DATE / TIME:	RECEIVED BY (SIGNATURE):
RELINQUISHED BY (SIGNATURE):	DATE / TIME:	RECEIVED FOR LABORATORY BY (SIGNATURE):	DATE / TIME:	REMARKS: DELIVERED TO CRANE LAB, ON SITE	

Order No. 70440

DYE - CRANE LAB

02395

CHAIN OF CUSTODY RECORD

PROJECT NO.: CTO 10 # 7141

SITE NAME: NSWC CRANE, DBG

SAMPLERS (SIGNATURE):

STATION NO.	DATE	TIME	COMP	GRAB	STATION LOCATION	NO. OF CONTAINERS	DYE - SOIL & 02 GLASS						REMARKS
—	7/25	1022		✓	02SS170002	1	1						
—		1034		✓	02SB170608	1	1						
—		1329		✓	02SB130507	1	1						
—		1359		✓	02SB120507	1	1						
—		1406		✓	02SS150002	1	1						
—		1419		✓	02SB150608	1	1						

RELINQUISHED BY (SIGNATURE):	DATE / TIME:	RECEIVED BY (SIGNATURE):	RELINQUISHED BY (SIGNATURE):	DATE / TIME:	RECEIVED BY (SIGNATURE):
	7-25-01 1520	G. Karty			
RELINQUISHED BY (SIGNATURE):	DATE / TIME:	RECEIVED BY (SIGNATURE):	RELINQUISHED BY (SIGNATURE):	DATE / TIME:	RECEIVED BY (SIGNATURE):
RELINQUISHED BY (SIGNATURE):	DATE / TIME:	RECEIVED FOR LABORATORY BY (SIGNATURE):	DATE / TIME:	REMARKS: DELIVERED TO CRANE LAB, ON SITE.	

Order No. 70440 (0693)

DYE - CRANE LAB

02397

CHAIN OF CUSTODY RECORD

PROJECT NO.: CTO 10 # 7141

SITE NAME: NSWC CRANE, DBG

SAMPLERS (SIGNATURE):

STATION NO.	DATE	TIME	COMP	GRAB	STATION LOCATION	NO. OF CONTAINERS	DYE - SOIL 8 oz GLASS	DYE - AQ L AMBER					REMARKS
RB	7/25	1655		✓	RB 072501 01	2	—	2					DPT STAINLESS STEEL CUTTING SHOE
RB	↓	1700		✓	RB 072501 02	2	—	2					BLADDER PUMP
FD	↓	0000		✓	FD 072501 02	1	1	—					DUP OF 0255200002
—	↓	1445		✓	0255200002	3	3	—					RUN ALSO MS/MSD
—	↓	1506		✓	025B200608	1	1	—					
—	↓	1516		✓	025519 0002	1	1	—					
—	↓	1527		✓	025B19 0406	1	1	—					
—	↓	1540		✓	0255180002	1	1	—					
—	↓	1607		✓	025B180507	1	1	—					
—	7/26	0935		✓	02GW05 01	2	—	2					
FD	7/25	0000		✓	FD072501 03	1	1						DUP OF 0255180002

RELINQUISHED BY (SIGNATURE):	DATE / TIME:	RECEIVED BY (SIGNATURE):	RELINQUISHED BY (SIGNATURE):	DATE / TIME:	RECEIVED BY (SIGNATURE):
	7.26.01 1520	Louis Schwenk			
RELINQUISHED BY (SIGNATURE):	DATE / TIME:	RECEIVED BY (SIGNATURE):	RELINQUISHED BY (SIGNATURE):	DATE / TIME:	RECEIVED BY (SIGNATURE):
RELINQUISHED BY (SIGNATURE):	DATE / TIME:	RECEIVED FOR LABORATORY BY (SIGNATURE):	DATE / TIME:	REMARKS: DELIVERED TO CRANE LAB, ON SITE	

Order No. 70440 (

DYE - CRANE LAB

02395

CHAIN OF CUSTODY RECORD

PROJECT NO.: CTO 10 # 7141

SITE NAME: NSWC CRANE, DBG

SAMPLERS (SIGNATURE): [signature]

STATION NO.	DATE	TIME	COMP	GRAB	STATION LOCATION	NO. OF CONTAINERS	DYE - A & L AMBER	DYE - SOIL 8oz GLASS					REMARKS
—	7/26	1520		✓	02GW0801	2	2	—					
—	7/27	0950		✓	02GWC11P301	2	2	—					
FD	↓	0000		✓	FD 072701 01	1	—	1					DUP OF 02SD02 0006
—		0950		✓	02 SD02 0006	3	-	3					RUN ALSO MS/MSD
—		1020		✓	02SD03 0006	1	—	1					
—	↓	1104		✓	02SD01 0006	1	—	1					
RB	7/27	1250		✓	RB 072701.01	2	2	—					STAINLESS STEEL TROWEL
—		1505		✓	02 SD 06 0006	1	—	1					
—		1520		✓	02 SD 05 0006 VS	1	—	1					
—		1620		✓	02 SD 04 0006	1	—	1					
—	↓	1650		✓	02-GW01 01	2	2	—					
—	7/28	1025		✓	02 GWC10P301	VS ~~2~~ 5	~~2~~ 5	—					RUN ALSO MS/MSD
—		1725		✓	02 GW 02 01	2	2	—					
FD	↓	0000		✓	FD072801 01	2	2	—					DUP OF 02GWC10 P301

RELINQUISHED BY (SIGNATURE):	DATE / TIME:	RECEIVED BY (SIGNATURE):	RELINQUISHED BY (SIGNATURE):	DATE / TIME:	RECEIVED BY (SIGNATURE):
[signature]	7.30.01 0935	[signature]			
RELINQUISHED BY (SIGNATURE):	DATE / TIME:	RECEIVED BY (SIGNATURE):	RELINQUISHED BY (SIGNATURE):	DATE / TIME:	RECEIVED BY (SIGNATURE):
RELINQUISHED BY (SIGNATURE):	DATE / TIME:	RECEIVED FOR LABORATORY BY (SIGNATURE):	DATE / TIME:	REMARKS: DELIVERED TO CRANE LAB, ON SITE	

Order No. 70440 (0693)

DYE - CRANE LAB

072901

CHAIN OF CUSTODY RECORD

PROJECT NO.: CTO 10 #7141

SITE NAME: NSWC CRANE, DBG

SAMPLERS (SIGNATURE): [signature]

STATION NO.	DATE	TIME	COMP	GRAB	STATION LOCATION	NO. OF CONTAINERS	DYE - AQ L AMBER	DYE - SOIL B 02					REMARKS
RB	7/29	0810		✓	RB 07290101	2	2	–					PE - PUMP BLADDER
FD	↓	0000		✓	FD 07290101	2	2	–					DUP OF 02SW07 01
—	↓	1350		✓	02SW0701	5	5	–					RUN ALSO MS/MSD
—	↓	1400		✓	02GW0701	2	2	–					
—	↓	1425		✓	02SD070006	1	–	1					

RELINQUISHED BY (SIGNATURE):	DATE / TIME:	RECEIVED BY (SIGNATURE):	RELINQUISHED BY (SIGNATURE):	DATE / TIME:	RECEIVED BY (SIGNATURE):
[signature]	7.30.01 0935	J. Karty			
RELINQUISHED BY (SIGNATURE):	DATE / TIME:	RECEIVED BY (SIGNATURE):	RELINQUISHED BY (SIGNATURE):	DATE / TIME:	RECEIVED BY (SIGNATURE):
RELINQUISHED BY (SIGNATURE):	DATE / TIME:	RECEIVED FOR LABORATORY BY (SIGNATURE):	DATE / TIME:	REMARKS: DELIVERED TO CRANE LAB, ON SITE	

Order No. 70440 (06

APPENDIX B.6

MONITORING WELL INSPECTION SHEETS

14.2

MONITORING WELL INSPECTION SHEET

NSWC Crane, CTO 10, job # N7141

Well ID: 02-01

Time: 1611 **Date:** 7-11-01 **Inspector's Name:** SIMPSON, RUJAHN

Inspection Item	Types of Problems	Status		Observation
		S	U	
Well Tag	Is it in-place, legible	✓		
Well security	Condition protective case, cap, lock	✓		
Well pad	Concrete ~~or gravel~~ & condition	✓		
Well seal	Condition of…	✓		
Area Immediately around well pad	Record any evidence of/or standing water in area of well	✓		
Dedicated sampling equipment	Condition of…	—	—	NA
PVC Riser	Condition of riser & survey reference point	✓		

~~NO CAPS~~

Comments: WL = 25.87'

Signature(s) [illegible]

Note: S= Satisfactory, U= Unsatisfactory
Check one, if unsatisfactory explain

NSWC Crane
Field Form
Revision: 2
November, 2000

MONITORING WELL INSPECTION SHEET

NSWC Crane, CTO 10, job # N7141

Well ID: 02-02

Time: 1601 **Date:** 7.11.01 **Inspector's Name:** SIMPSON, RUJAHN

Inspection Item	Types of Problems	Status		Observation
		S	U	
Well Tag	Is it in-place, legible	✓		
Well security	Condition protective case, cap, lock		✓	NO LOCK, LOCKED AFTER MEASUREMENT
Well pad	~~Concrete~~ or gravel & condition	✓		
Well seal	Condition of...	✓		
Area Immediately around well pad	Record any evidence of/or standing water in area of well	✓		
Dedicated sampling equipment	Condition of...	—	—	NA
PVC Riser	Condition of riser & survey reference point	✓		OK, NO OUTER CASE

Comments: WL = 45.70

Signature(s) [illegible]

Note: S= Satisfactory, U= Unsatisfactory
Check one, if unsatisfactory explain

NSWC Crane
Field Form
Revision: 2
November [illegible]0

MONITORING WELL INSPECTION SHEET

NSWC Crane, CTO 10, job # N7141

Well ID: 02-03

Time: 1532 **Date:** 7-11-01 **Inspector's Name:** SIMPSON, RUJAHN

Inspection Item	Types of Problems	Status		Observation
		S	U	
Well Tag	Is it in-place, legible	✓		
Well security	Condition protective case, cap, lock		✓	UNLOCKED, LOCKED AFTER MEASUREMENT
Well pad	~~Concrete or~~ gravel & condition			
Well seal	Condition of…			
Area immediately around well pad	Record any evidence of/or standing water in area of well			
Dedicated sampling equipment	Condition of…	—	—	NA
PVC Riser	Condition of riser & survey reference point			

Comments: WL = 43.56

Signature(s) [illegible]

Note: S= Satisfactory, U= Unsatisfactory
Check one, if unsatisfactory explain

NSWC Crane
Field Form
Revision: 2
November, 2000

MONITORING WELL INSPECTION SHEET

NSWC Crane, CTO 10, job # N7141

Well ID: 02-04

Time: 1535 **Date:** 7.11.01 **Inspector's Name:** SIMPSON, RUJAHN

Inspection Item	Types of Problems	Status		Observation
		S	U	
Well Tag	Is it in-place, legible	✓		
Well security	Condition protective case, cap, lock		✓	UNLOCKED, LOCKED AFTER MEASUREMENT
Well pad	~~Concrete or~~ gravel & condition	✓		
Well seal	Condition of…	✓		
Area Immediately around well pad	Record any evidence of/or standing water in area of well	✓		
Dedicated sampling equipment	Condition of…	—		NA
PVC Riser	Condition of riser & survey reference point	✓		

Comments: WL = 38.38

Signature(s) [illegible]

Note: S= Satisfactory, U= Unsatisfactory
Check one, if unsatisfactory explain

MONITORING WELL INSPECTION SHEET

NSWC Crane, CTO 10, Job # N7141

Well ID: 02-05

Time: 1410 **Date:** 7.11.01 **Inspector's Name:** SIMPSON, RUJAHN

Inspection Item	Types of Problems	Status		Observation
		S	U	
Well Tag	Is it in-place, legible	✓		
Well security	Condition protective case, cap, lock	✓		
Well pad	~~Concrete or~~ gravel & condition	✓		
Well seal	Condition of…	✓		
Area Immediately around well pad	Record any evidence of/or standing water in area of well	✓		
Dedicated sampling equipment	Condition of…	—	—	NA
PVC Riser	Condition of riser & survey reference point	✓		PVC ONLY, NO OUTER CASE

Comments: WL = 56.75'

Signature(s) [illegible]

Note: S= Satisfactory, U= Unsatisfactory
Check one, if unsatisfactory explain

NSWC Crane
Field Form
Revision: 2
November, 2000

MONITORING WELL INSPECTION SHEET
NSWC Crane, CTO 10, job # N7141

Well ID: 02-06

Time: 1607 **Date:** 7.11.01 **Inspector's Name:** SIMPSON, RUJAHN

Inspection Item	Types of Problems	Status		Observation
		S	U	
Well Tag	Is it in-place, legible	✓		
Well security	Condition protective case, cap, lock	✓		
Well pad	Concrete or ~~gravel~~ & condition	✓		
Well seal	Condition of…	✓		
Area Immediately around well pad	Record any evidence of/or standing water in area of well	✓		
Dedicated sampling equipment	Condition of…	—		NA
PVC Riser	Condition of riser & survey reference point	✓		

IN CAP

Comments: WL = 60.24'

Signature(s) [illegible]

Note: S= Satisfactory, U= Unsatisfactory
Check one, if unsatisfactory explain

NSWC Crane
Field Form
Revision: 2
November, 2000

MONITORING WELL INSPECTION SHEET
NSWC Crane, CTO 10, job # N7141

Well ID: 02-07

Time: 1605 **Date:** 7.11.01 **Inspector's Name:** SIMPSON, RUJAHN

Inspection Item	Types of Problems	Status S	Status U	Observation
Well Tag	Is it in-place, legible	✓		
Well security	Condition protective case, cap, lock		✓	NO J PLUG OR LOCK, OUTER CAP OK
Well pad	Concrete or ~~gravel~~ & condition	✓		
Well seal	Condition of…	✓		
Area Immediately around well pad	Record any evidence of/or standing water in area of well	✓		
Dedicated sampling equipment	Condition of…	—	—	NA
PVC Riser	Condition of riser & survey reference point	✓		IN CAP

Comments: WL= 54.65'

Signature(s) [illegible]

Note: S= Satisfactory, U= Unsatisfactory
Check one, if unsatisfactory explain

NSWC Crane
Field Form
Revision: 2
November, 2000

MONITORING WELL INSPECTION SHEET
NSWC Crane, CTO 10, job # N7141

Well ID: 02-08

Time: 1501 **Date:** 7-11-01 **Inspector's Name:** SIMPSON, RUJAHN

Inspection Item	Types of Problems	Status		Observation
		S	U	
Well Tag	Is it in-place, legible	✓		
Well security	Condition protective case, cap, lock	✓		
Well pad	~~Concrete or~~ gravel & condition	✓		SMALL CONCRETE PAD
Well seal	Condition of…	✓		
Area Immediately around well pad	Record any evidence of/or standing water in area of well	✓		
Dedicated sampling equipment	Condition of…	—	—	
PVC Riser	Condition of riser & survey reference point	✓		

Comments: WL = 48.82

Signature(s) [illegible]

Note: S= Satisfactory, U= Unsatisfactory
Check one, if unsatisfactory explain

NSWC Crane
Field Form
Revision: 2
November 2000

MONITORING WELL INSPECTION SHEET
NSWC Crane, CTO 10, job # N7141

Well ID: 02C09

Time: 1245 **Date:** 7.11.01 **Inspector's Name:** SIMPSON, RUJAHN

Inspection Item	Types of Problems	Status		Observation
		S	U	
Well Tag	Is it in-place, legible	✓		
Well security	Condition protective case, cap, lock	✓		
Well pad	~~Concrete or~~ gravel & condition	✓		
Well seal	Condition of…	✓		
Area Immediately around well pad	Record any evidence of/or standing water in area of well	✓		
Dedicated sampling equipment	Condition of…	—		NA
PVC Riser	Condition of riser & survey reference point	✓		

Comments: WL = 170.25'

Signature(s) [illegible]

Note: S= Satisfactory, U= Unsatisfactory
Check one, if unsatisfactory explain

NSWC Crane
Field Form
Revision: 2
November, 2000

MONITORING WELL INSPECTION SHEET

NSWC Crane, CTO 10, job # N7141

02C09P2

Well ID: ~~02P6P2~~ KS

Time: 1243 **Date:** 7-11-01 **Inspector's Name:** SIMPSON, ROJAHN

Inspection Item	Types of Problems	Status		Observation
		S	U	
Well Tag	Is it in-place, legible	✓		
Well security	Condition protective case, cap, lock	✓		
Well pad	~~Concrete~~ or gravel & condition	✓		
Well seal	Condition of…	✓		
Area Immediately around well pad	Record any evidence of/or standing water in area of well	✓		
Dedicated sampling equipment	Condition of…	—	—	NA
PVC Riser	Condition of riser & survey reference point	✓		

Comments: WL = DRY TO BTM 96'

Signature(s) K. S. Simpson

Note: S= Satisfactory, U= Unsatisfactory
Check one, if unsatisfactory explain

NSWC Crane
Field Form
Revision: 2
November, 2000

MONITORING WELL INSPECTION SHEET
NSWC Crane, CTO 10, job # N7141

Well ID: 02C10

Time: 1422 **Date:** 7.11.01 **Inspector's Name:** SIMPSON, RUJAHN

Inspection Item	Types of Problems	Status		Observation
		S	U	
Well Tag	Is it in-place, legible	✓		
Well security	Condition protective case, cap, lock	✓		
Well pad	~~Concrete~~ or gravel & condition	✓		
Well seal	Condition of…	✓		
Area Immediately around well pad	Record any evidence of/or standing water in area of well	✓		
Dedicated sampling equipment	Condition of…	—	—	NA
PVC Riser	Condition of riser & survey reference point	✓		

Comments: WL = 146.38'

Signature(s) [illegible]

Note: S= Satisfactory, U= Unsatisfactory
Check one, if unsatisfactory explain

NSWC Crane
Field Form
Revision: 2
November, 2000

MONITORING WELL INSPECTION SHEET

NSWC Crane, CTO 10, job # N7141

Well ID: 02C10P2

Time: 1423 **Date:** 7/1/01 **Inspector's Name:** SIMPSON, RUJAHN

Inspection Item	Types of Problems	Status		Observation
		S	U	
Well Tag	Is it in-place, legible	✓		
Well security	Condition protective case, cap, lock	✓		
Well pad	~~Concrete~~ or gravel & condition	✓		
Well seal	Condition of…	✓		
Area Immediately around well pad	Record any evidence of/or standing water in area of well	✓		
Dedicated sampling equipment	Condition of…	—	—	NA
PVC Riser	Condition of riser & survey reference point	✓		

Comments: WL = 40.87'

Signature(s) [illegible]

Note: S= Satisfactory, U= Unsatisfactory
Check one, if unsatisfactory explain

NSWC Crane
Field Form
Revision: 2
November [illegible]

MONITORING WELL INSPECTION SHEET

NSWC Crane, CTO 10, job # N7141

Well ID: 02C10P3

Time: 1425 **Date:** 7.11.01 **Inspector's Name:** SIMPSON, RUJAHN

Inspection Item	Types of Problems	Status		Observation
		S	U	
Well Tag	Is it in-place, legible	✓		
Well security	Condition protective case, cap, lock	✓		
Well pad	~~Concrete~~ or gravel & condition	✓		
Well seal	Condition of…	✓		
Area Immediately around well pad	Record any evidence of/or standing water in area of well	✓		
Dedicated sampling equipment	Condition of…	—	—	NA
PVC Riser	Condition of riser & survey reference point	✓		

Comments: WL = 29.28'

Signature(s) [illegible]

Note: S= Satisfactory, U= Unsatisfactory
Check one, if unsatisfactory explain

NSWC Crane
Field Form
Revision: 2
November, 2000

MONITORING WELL INSPECTION SHEET
NSWC Crane, CTO 10, job # N7141

Well ID: 02C11

Time: 1512 **Date:** 7.11.01 **Inspector's Name:** SIMPSON, RUJAHN

Inspection Item	Types of Problems	Status		Observation
		S	U	
Well Tag	Is it in-place, legible	✓		
Well security	Condition protective case, cap, lock	✓		
Well pad	~~Concrete~~ or gravel & condition	✓		
Well seal	Condition of…	✓		
Area Immediately around well pad	Record any evidence of/or standing water in area of well	✓		
Dedicated sampling equipment	Condition of…	—		
PVC Riser	Condition of riser & survey reference point	✓		ANT NEST IN CAP

Comments: WL = 149.23'

Signature(s) [illegible]

Note: S= Satisfactory, U= Unsatisfactory
Check one, if unsatisfactory explain

NSWC Crane
Field Form
Revision: 2
November 2000

MONITORING WELL INSPECTION SHEET

NSWC Crane, CTO 10, job # N7141

Well ID: 02-C11P2

Time: 1513 **Date:** 7-11-01 **Inspector's Name:** SIMPSON, RUJAHN

Inspection Item	Types of Problems	Status		Observation
		S	U	
Well Tag	Is it in-place, legible	✓		
Well security	Condition protective case, cap, lock	✓		
Well pad	~~Concrete~~ or gravel & condition	✓		
Well seal	Condition of…	✓		
Area Immediately around well pad	Record any evidence of/or standing water in area of well	✓		
Dedicated sampling equipment	Condition of…	—		NA
PVC Riser	Condition of riser & survey reference point	✓		

Comments: WL = 73.64'

Signature(s) [illegible]

Note: S= Satisfactory, U= Unsatisfactory
Check one, if unsatisfactory explain

NSWC Crane
Field Form
Revision: 2
November, 2000

MONITORING WELL INSPECTION SHEET

NSWC Crane, CTO 10, job # N7141

Well ID: 02 C11P3

Time: 1515 **Date:** 7.11.01 **Inspector's Name:** SIMPSON, RUJAHN

Inspection Item	Types of Problems	Status		Observation
		S	U	
Well Tag	Is it in-place, legible	✓		
Well security	Condition protective case, cap, lock	✓		
Well pad	Concrete or gravel & condition	✓		
Well seal	Condition of...	✓		
Area Immediately around well pad	Record any evidence of/or standing water in area of well	✓		
Dedicated sampling equipment	Condition of...	—	—	NA
PVC Riser	Condition of riser & survey reference point	✓		

Comments: WL = 35.59'

Signature(s) [illegible]

Note: S= Satisfactory, U= Unsatisfactory
Check one, if unsatisfactory explain

NSWC Crane
Field Form
Revision: 2
November 2000

MONITORING WELL INSPECTION SHEET
NSWC Crane, CTO 10, job # N7141

Well ID: 02C12

Time: 1404 **Date:** 7.11.01 **Inspector's Name:** SIMPSON, RUJAHN

Inspection Item	Types of Problems	Status		Observation
		S	U	
Well Tag	Is it in-place, legible	✓		
Well security	Condition protective case, cap, lock	✓		
Well pad	~~Concrete~~ or gravel & condition	✓		
Well seal	Condition of…	✓		
Area Immediately around well pad	Record any evidence of/or standing water in area of well	✓		
Dedicated sampling equipment	Condition of…	—	—	NA
PVC Riser	Condition of riser & survey reference point	✓		

Comments: WL = 171.22'

Signature(s) [illegible]

Note: S= Satisfactory, U= Unsatisfactory
Check one, if unsatisfactory explain

NSWC Crane
Field Form
Revision: 2
November, 2000

MONITORING WELL INSPECTION SHEET
NSWC Crane, CTO 10, Job # N7141

Well ID: 02-12 P2

Time: 1405 **Date:** 7-11-01 **Inspector's Name:** SIMPSON, ROJAHN

Inspection Item	Types of Problems	Status		Observation
		S	U	
Well Tag	Is it in-place, legible	✓		
Well security	Condition protective case, cap, lock	✓		
Well pad	~~Concrete~~ or gravel & condition	✓		
Well seal	Condition of...	✓		
Area Immediately around well pad	Record any evidence of/or standing water in area of well	✓		
Dedicated sampling equipment	Condition of...	—	—	NA
PVC Riser	Condition of riser & survey reference point	✓		

Comments: WL = 88.98'

Signature(s) [illegible]

Note: S= Satisfactory, U= Unsatisfactory
Check one, if unsatisfactory explain

NSWC Crane
Field Form
Revision: 2
November, 2000

MONITORING WELL INSPECTION SHEET

NSWC Crane, CTO 10, Job # N7141

Well ID: 02612P3

Time: 1406 **Date:** 7-11-01 **Inspector's Name:** SIMPSON, RUJAHN

Inspection Item	Types of Problems	Status		Observation
		S	U	
Well Tag	Is it in-place, legible	✓		
Well security	Condition protective case, cap, lock	✓		
Well pad	~~Concrete~~ or gravel & condition	✓		
Well seal	Condition of…	✓		
Area Immediately around well pad	Record any evidence of/or standing water in area of well	✓		
Dedicated sampling equipment	Condition of…	—	—	NA
PVC Riser	Condition of riser & survey reference point	✓		

Comments: WL = 23.67'

Signature(s) [illegible]

Note: S= Satisfactory, U= Unsatisfactory
Check one, if unsatisfactory explain

NSWC Crane
Field Form
Revision: 2
November, 2000

MONITORING WELL INSPECTION SHEET

NSWC Crane, CTO 10, Job # N7141

Well ID: 02C13

Time: 1413 **Date:** 7-11-01 **Inspector's Name:** SIMPSON, RUJAHN

Inspection Item	Types of Problems	Status		Observation
		S	U	
Well Tag	Is it in-place, legible	✓		
Well security	Condition protective case, cap, lock	✓		
Well pad	~~Concrete or~~ gravel & condition	✓		
Well seal	Condition of...	✓		
Area Immediately around well pad	Record any evidence of/or standing water in area of well	✓		
Dedicated sampling equipment	Condition of...	—	—	NA
PVC Riser	Condition of riser & survey reference point	✓		

Comments: WL = 58.25'

Signature(s) [illegible]

Note: S= Satisfactory, U= Unsatisfactory
Check one, if unsatisfactory explain

NSWC Crane
Field Form
Revision: 2
November, 2000

MONITORING WELL INSPECTION SHEET
NSWC Crane, CTO 10, job # N7141

Well ID: 02C13P2

Time: 1414 **Date:** 7.11.01 **Inspector's Name:** SIMPSON, RUJAHN

Inspection Item	Types of Problems	Status		Observation
		S	U	
Well Tag	Is it in-place, legible	✓		
Well security	Condition protective case, cap, lock	✓		
Well pad	~~Concrete or~~ gravel & condition	✓		
Well seal	Condition of…	✓		
Area Immediately around well pad	Record any evidence of/or standing water in area of well	✓		
Dedicated sampling equipment	Condition of…	—	—	NA
PVC Riser	Condition of riser & survey reference point	✓		

Comments: WL = 40.11'

Signature(s) [illegible]

Note: S= Satisfactory, U= Unsatisfactory
Check one, if unsatisfactory explain

NSWC Crane
Field Form
Revision: 2
November, 2000

MONITORING WELL INSPECTION SHEET

NSWC Crane, CTO 10, Job # N7141

Well ID: 02C13 P3

Time: 1415 **Date:** 7-11-01 **Inspector's Name:** SIMPSON, RUJAHN

Inspection Item	Types of Problems	Status		Observation
		S	U	
Well Tag	Is it in-place, legible	✓		
Well security	Condition protective case, cap, lock	✓		
Well pad	~~Concrete~~ or gravel & condition	✓		
Well seal	Condition of…	✓		
Area Immediately around well pad	Record any evidence of/or standing water in area of well	✓		
Dedicated sampling equipment	Condition of…	—	—	NA
PVC Riser	Condition of riser & survey reference point	✓		ANT NEST IN CAP

Comments: WL = 10.48'

Signature(s) [illegible]

Note: S= Satisfactory, U= Unsatisfactory
Check one, if unsatisfactory explain

NSWC Crane
Field Form
Revision: 2
November, 2000

MONITORING WELL INSPECTION SHEET

NSWC Crane, CTO 10, job # N7141

Well ID: 02 C14

Time: 1548 **Date:** 7-11-01 **Inspector's Name:** SIMPSON, RUJAHN

Inspection Item	Types of Problems	Status S	Status U	Observation
Well Tag	Is it in-place, legible	✓		
Well security	Condition protective case, cap, lock		✓	UNLOCKED, LOCKED AFTER MEASUREMENT
Well pad	~~Concrete~~ or gravel & condition	✓		
Well seal	Condition of...	✓		
Area Immediately around well pad	Record any evidence of/or standing water in area of well	✓		
Dedicated sampling equipment	Condition of...	✓		NA
PVC Riser	Condition of riser & survey reference point	✓		

IN WOODS

Comments: WL = DRY 148' BTM

Signature(s) [illegible]

Note: S= Satisfactory, U= Unsatisfactory
Check one, if unsatisfactory explain

NSWC Crane
Field Form
Revision: 2
November, 2000

MONITORING WELL INSPECTION SHEET
NSWC Crane, CTO 10, Job # N7141

Well ID: 02C14P2

Time: 1550 **Date:** 7.11.01 **Inspector's Name:** SIMPSON, RUJAHN

Inspection Item	Types of Problems	Status		Observation
		S	U	
Well Tag	Is it in-place, legible	✓		
Well security	Condition protective case, cap, lock		✓	UNLOCKED, LOCKED AFTER MEASUREMENT
Well pad	~~Concrete~~ or gravel & condition	✓		
Well seal	Condition of…	✓		
Area Immediately around well pad	Record any evidence of/or standing water in area of well	✓		
Dedicated sampling equipment	Condition of…	—		NA
PVC Riser	Condition of riser & survey reference point	✓		

IN WOODS

Comments: WL = 63.95'

Signature(s) [illegible]

Note: S= Satisfactory, U= Unsatisfactory
Check one, if unsatisfactory explain

NSWC Crane
Field Form
Revision: 2
November, 2000

MONITORING WELL INSPECTION SHEET

NSWC Crane, CTO 10, job # N7141

Well ID: 02 C14P3

Time: 1551 **Date:** 7.11.01 **Inspector's Name:** SIMPSON, RUJAHN

Inspection Item	Types of Problems	Status S	Status U	Observation
Well Tag	Is it in-place, legible	✓		
Well security	Condition protective case, cap, lock		✓	UNLOCKED LOCKED AFTER MEASUREMENT
Well pad	~~Concrete or~~ gravel & condition	✓		
Well seal	Condition of…	✓		
Area Immediately around well pad	Record any evidence of/or standing water in area of well	✓		
Dedicated sampling equipment	Condition of…	—	—	
PVC Riser	Condition of riser & survey reference point	✓		

IN WOODS

Comments: W/L = 37.13'

Signature(s) [signature]

Note: S= Satisfactory, U= Unsatisfactory
Check one, if unsatisfactory explain

NSWC Crane
Field Form
Revision: 2
November, 2000

MONITORING WELL INSPECTION SHEET

NSWC Crane, CTO 10, job # N7141

Well ID: 02 C15

Time: 1524 **Date:** 7.11.01 **Inspector's Name:** SIMPSON, RUJAHN

Inspection Item	Types of Problems	Status		Observation
		S	U	
Well Tag	Is it in-place, legible	✓		
Well security	Condition protective case, cap, lock	✓		
Well pad	Concrete or gravel & condition	✓		
Well seal	Condition of…	✓		
Area Immediately around well pad	Record any evidence of/or standing water in area of well	✓		
Dedicated sampling equipment	Condition of…	—	—	NA
PVC Riser	Condition of riser & survey reference point	✓		

Comments: WL = ~~34.28'~~ KS 69.90'

Signature(s) [illegible]

Note: S= Satisfactory, U= Unsatisfactory
Check one, if unsatisfactory explain

NSWC Crane
Field Form
Revision: 2
November [illegible]

MONITORING WELL INSPECTION SHEET
NSWC Crane, CTO 10, job # N7141

Well ID: 02 C15P2

Time: 1525 **Date:** 7-11-01 **Inspector's Name:** SIMPSON, RUJAHN

Inspection Item	Types of Problems	Status		Observation
		S	U	
Well Tag	Is it in-place, legible	✓		
Well security	Condition protective case, cap, lock	✓		
Well pad	~~Concrete or~~ gravel & condition	✓		
Well seal	Condition of…	✓		
Area Immediately around well pad	Record any evidence of/or standing water in area of well	✓		
Dedicated sampling equipment	Condition of…	—	—	NA
PVC Riser	Condition of riser & survey reference point	✓		

Comments: WL = ~~69.90'~~ KS 34.28'

Signature(s) [illegible]

Note: S= Satisfactory, U= Unsatisfactory
Check one, if unsatisfactory explain

NSWC Crane
Field Form
Revision: 2
November, 2000

MONITORING WELL INSPECTION SHEET

NSWC Crane, CTO 10, job # N7141

Well ID: 02C16

Time: 1507 **Date:** 7.11.01 **Inspector's Name:** SIMPSON, RUJAHN

Inspection Item	Types of Problems	Status		Observation
		S	U	
Well Tag	Is it in-place, legible	✓		
Well security	Condition protective case, cap, lock		✓	CHAIN BROKEN
Well pad	~~Concrete or~~ gravel & condition	✓		
Well seal	Condition of…	✓		
Area Immediately around well pad	Record any evidence of/or standing water in area of well	✓		
Dedicated sampling equipment	Condition of…	—		NA
PVC Riser	Condition of riser & survey reference point	✓		

Comments: WL = DRY BTM = 80'

Signature(s) [illegible]

Note: S= Satisfactory, U= Unsatisfactory
Check one, if unsatisfactory explain

NSWC Crane
Field Form
Revision: 2
November, [illegible]

MONITORING WELL INSPECTION SHEET
NSWC Crane, CTO 10, Job # N7141

Well ID: 02C16P2

Time: 1506 **Date:** 7.11.01 **Inspector's Name:** SIMPSON, RUJAHN

Inspection Item	Types of Problems	Status		Observation
		S	U	
Well Tag	Is it in-place, legible	✓		
Well security	Condition protective case, cap, lock	✓		UNLOCKED, LOCKED AFTER MEASUREMENT
Well pad	~~Concrete or~~ gravel & condition	✓		
Well seal	Condition of…	✓		
Area Immediately around well pad	Record any evidence of/or standing water in area of well	✓		
Dedicated sampling equipment	Condition of…	—		NA
PVC Riser	Condition of riser & survey reference point	✓		

Comments: WL=43.03'

Signature(s) [illegible]

Note: S= Satisfactory, U= Unsatisfactory
Check one, if unsatisfactory explain

NSWC Crane
Field Form
Revision: 2
November, 2000

MONITORING WELL INSPECTION SHEET

NSWC Crane, CTO 10, Job # N7141

Well ID: 02C17

Time: 1453 **Date:** 7.11.01 **Inspector's Name:** SIMPSON, RUJAHN

Inspection Item	Types of Problems	Status		Observation
		S	U	
Well Tag	Is it in-place, legible	✓		
Well security	Condition protective case, cap, lock		✓	CHAIN BROKEN
Well pad	Concrete or gravel & condition	✓		
Well seal	Condition of...	✓		
Area Immediately around well pad	Record any evidence of/or standing water in area of well	✓		
Dedicated sampling equipment	Condition of...	—	—	NA
PVC Riser	Condition of riser & survey reference point	✓		

Comments: WL=84.75'

Signature(s) [illegible]

Note: S= Satisfactory, U= Unsatisfactory
Check one, if unsatisfactory explain

NSWC Crane
Field Form
Revision: 2
November, 2000

MONITORING WELL INSPECTION SHEET
NSWC Crane, CTO 10, job # N7141

Well ID: 02C17P2

Time: 1455 **Date:** 7.11.01 **Inspector's Name:** SIMPSON, RUJAHN

Inspection Item	Types of Problems	Status		Observation
		S	U	
Well Tag	Is it in-place, legible	✓		
Well security	Condition protective case, cap, lock		✓	CHAIN BROKEN
Well pad	~~Concrete~~ or gravel & condition	✓		
Well seal	Condition of…	✓		
Area Immediately around well pad	Record any evidence of/or standing water in area of well	✓		
Dedicated sampling equipment	Condition of…	—	—	NA
PVC Riser	Condition of riser & survey reference point	✓		

Comments: WL = 48.91'

Signature(s) [illegible]

Note: S= Satisfactory, U= Unsatisfactory
Check one, if unsatisfactory explain

NSWC Crane
Field Form
Revision: 2
November, 2000

MONITORING WELL INSPECTION SHEET
NSWC Crane, CTO 10, job # N7141

Well ID: 02C17 P3

Time: 1456 **Date:** 7.11.01 **Inspector's Name:** SIMPSON, RUJAHN

Inspection Item	Types of Problems	Status		Observation
		S	U	
Well Tag	Is it in-place, legible	✓		
Well security	Condition protective case, cap, lock	✓		
Well pad	~~Concrete~~ or gravel & condition	✓		
Well seal	Condition of…	✓		
Area Immediately around well pad	Record any evidence of/or standing water in area of well	✓		
Dedicated sampling equipment	Condition of…	—	—	NA
PVC Riser	Condition of riser & survey reference point	✓		

Comments: WL = DRY

BTM = 29.4'

Signature(s) [illegible]

Note: S= Satisfactory, U= Unsatisfactory
Check one, if unsatisfactory explain

NSWC Crane
Field Form
Revision: 2
November, 2000

MONITORING WELL INSPECTION SHEET

NSWC Crane, CTO 10, Job # N7141

Well ID: 02C18

Time: 1442 **Date:** 7.11.01 **Inspector's Name:** SIMPSON, RUJAHN

Inspection Item	Types of Problems	Status		Observation
		S	U	
Well Tag	Is it in-place, legible	✓		
Well security	Condition protective case, cap, lock		✓	BROKEN CHAIN
Well pad	~~Concrete or~~ gravel & condition	✓		
Well seal	Condition of…	✓		
Area Immediately around well pad	Record any evidence of/or standing water in area of well	✓		
Dedicated sampling equipment	Condition of…	—	—	NA
PVC Riser	Condition of riser & survey reference point	✓		

Comments: WL = 88.50'

Signature(s) [illegible]

Note: S= Satisfactory, U= Unsatisfactory
Check one, if unsatisfactory explain

NSWC Crane
Field Form
Revision: 2
November, 2000

MONITORING WELL INSPECTION SHEET

NSWC Crane, CTO 10, job # N7141

Well ID: 02C18P2

Time: 1443 **Date:** 7.1(.01 **Inspector's Name:** SIMPSON, RUJAHN

Inspection Item	Types of Problems	Status		Observation
		S	U	
Well Tag	Is it in-place, legible	✓		
Well security	Condition protective case, cap, lock		✓	BROKEN CHAIN
Well pad	~~Concrete~~ or gravel & condition	✓		
Well seal	Condition of…	✓		
Area Immediately around well pad	Record any evidence of/or standing water in area of well	✓		
Dedicated sampling equipment	Condition of…	—	—	NA
PVC Riser	Condition of riser & survey reference point	✓		

Comments: WL = 52.86

Signature(s) [illegible]

Note: S= Satisfactory, U= Unsatisfactory
Check one, if unsatisfactory explain

NSWC Crane
Field Form
Revision: 2
November, 2000

MONITORING WELL INSPECTION SHEET
NSWC Crane, CTO 10, job # N7141

Well ID: 02C18P3

Time: 1442 **Date:** 7.11.01 **Inspector's Name:** SIMPSON, RUJAHN

Inspection Item	Types of Problems	Status		Observation
		S	U	
Well Tag	Is it in-place, legible	✓		
Well security	Condition protective case, cap, lock		✓	UNLOCKED, LOCKED AFTER MEASUREMENT
Well pad	~~Concrete or~~ gravel & condition	✓		
Well seal	Condition of…	✓		
Area Immediately around well pad	Record any evidence of/or standing water in area of well	✓		
Dedicated sampling equipment	Condition of…	—	—	NA
PVC Riser	Condition of riser & survey reference point	✓		

Comments: WL = ~~21.09~~ 21.15'
BTM = 21.27'

Signature(s) [illegible]

Note: S= Satisfactory, U= Unsatisfactory
Check one, if unsatisfactory explain

NSWC Crane
Field Form
Revision: 2
November, 2000

MONITORING WELL INSPECTION SHEET

NSWC Crane, CTO 10, job # N7141

Well ID: 02C19

Time: 1620 **Date:** 7-11-01 **Inspector's Name:** SIMPSON, RUJAHN

Inspection Item	Types of Problems	Status		Observation
		S	U	
Well Tag	Is it in-place, legible	✓		
Well security	Condition protective case, cap, lock		✓	UNLOCKED, LOCKED AFTER MEASUREMENT
Well pad	~~Concrete~~ or gravel & condition			
Well seal	Condition of…	✓		
Area Immediately around well pad	Record any evidence of/or standing water in area of well	✓		
Dedicated sampling equipment	Condition of…	—	—	NA
PVC Riser	Condition of riser & survey reference point	✓		

IN WOODS

Comments: WL= 87.01

Signature(s) [illegible]

Note: S= Satisfactory, U= Unsatisfactory
Check one, if unsatisfactory explain

NSWC Crane
Field Form
Revision: 2
November, 2000

MONITORING WELL INSPECTION SHEET

NSWC Crane, CTO 10, job # N7141

Well ID: 02C19P2

Time: 1621 **Date:** 7.11.01 **Inspector's Name:** SIMPSON, RUJAHN

Inspection Item	Types of Problems	Status		Observation
		S	U	
Well Tag	Is it in-place, legible	✓		
Well security	Condition protective case, cap, lock	✓		
Well pad	~~Concrete~~ or gravel & condition	✓		
Well seal	Condition of…	✓		
Area Immediately around well pad	Record any evidence of/or standing water in area of well	✓		
Dedicated sampling equipment	Condition of…	—		NA
PVC Riser	Condition of riser & survey reference point	✓		

Comments: wl = 48.89' IN WOODS

Signature(s) [illegible]

Note: S= Satisfactory, U= Unsatisfactory
Check one, if unsatisfactory explain

NSWC Crane
Field Form
Revision: 2
November, 2000

MONITORING WELL INSPECTION SHEET

NSWC Crane, CTO 10, job # N7141

Well ID: 02C19 P3

Time: 1622 **Date:** 7-11-01 **Inspector's Name:** SIMPSON, RUJAHN

Inspection Item	Types of Problems	Status		Observation
		S	U	
Well Tag	Is it in-place, legible	✓		
Well security	Condition protective case, cap, lock		✓	UNLOCKED, LOCKED AFTER MEASURMENT
Well pad	~~Concrete~~ or gravel & condition	✓		
Well seal	Condition of…	✓		
Area Immediately around well pad	Record any evidence of/or standing water in area of well	✓		
Dedicated sampling equipment	Condition of…	—	—	NA
PVC Riser	Condition of riser & survey reference point	✓		ANT NEST IN OUTER CASE

Comments: WL = DRY 19.0' BTM

IN WOODS

Signature(s) [illegible]

Note: S= Satisfactory, U= Unsatisfactory
Check one, if unsatisfactory explain

NSWC Crane
Field Form
Revision: 2
November [illegible]

MONITORING WELL INSPECTION SHEET
NSWC Crane, CTO 10, job # N7141

Well ID: 02C20

Time: 1432 Date: 7.11.01 Inspector's Name: SIMPSON, RUJAHN

Inspection Item	Types of Problems	Status		Observation
		S	U	
Well Tag	Is it in-place, legible	✓		
Well security	Condition protective case, cap, lock	✓		
Well pad	~~Concrete~~ or gravel & condition	✓		
Well seal	Condition of…	✓		
Area Immediately around well pad	Record any evidence of/or standing water in area of well	✓		
Dedicated sampling equipment	Condition of…	—	—	NA
PVC Riser	Condition of riser & survey reference point	✓		

Comments: wl = 137.54'

Signature(s) [illegible]

Note: S= Satisfactory, U= Unsatisfactory
Check one, if unsatisfactory explain

NSWC Crane
Field Form
Revision: 2
November, 2000

MONITORING WELL INSPECTION SHEET

NSWC Crane, CTO 10, job # N7141

Well ID: 02C20P2

Time: 1434 **Date:** 7-11-01 **Inspector's Name:** SIMPSON, RUJAHN

Inspection Item	Types of Problems	Status		Observation
		S	U	
Well Tag	Is it in-place, legible	✓		
Well security	Condition protective case, cap, lock	✓		
Well pad	~~Concrete or~~ gravel & condition	✓		
Well seal	Condition of…	✓		
Area Immediately around well pad	Record any evidence of/or standing water in area of well	✓		
Dedicated sampling equipment	Condition of…	—	—	NA
PVC Riser	Condition of riser & survey reference point	✓		

Comments: WL = 58.00

Signature(s) [illegible]

Note: S= Satisfactory, U= Unsatisfactory
Check one, if unsatisfactory explain

NSWC Crane
Field Form
Revision: 2
November 2000

MONITORING WELL INSPECTION SHEET

NSWC Crane, CTO 10, job # N7141

Well ID: 02C20P3

Time: 1435 **Date:** 7-11-01 **Inspector's Name:** SIMPSON, RUJAHN

Inspection Item	Types of Problems	Status		Observation
		S	U	
Well Tag	Is it in-place, legible	✓		
Well security	Condition protective case, cap, lock	✓		
Well pad	~~Concrete or~~ gravel & condition	✓		
Well seal	Condition of…	✓		
Area Immediately around well pad	Record any evidence of/or standing water in area of well	✓		
Dedicated sampling equipment	Condition of…	—	—	NA
PVC Riser	Condition of riser & survey reference point	✓		

Comments: W/L = 17.97

Signature(s) [illegible]

Note: S= Satisfactory, U= Unsatisfactory
Check one, if unsatisfactory explain

NSWC Crane
Field Form
Revision: 2
November, 2000

MONITORING WELL INSPECTION SHEET

NSWC Crane, CTO 10, Job # N7141

Well ID: 02C22

Time: 1255 Date: 7-11-01 Inspector's Name: SIMPSON, RUJAHN

Inspection Item	Types of Problems	Status		Observation
		S	U	
Well Tag	Is it in-place, legible	✓		
Well security	Condition protective case, cap, lock			UNLOCKED, LOCKED AFTER WL MEASUREMENT
Well pad	~~Concrete or~~ gravel & condition	✓		
Well seal	Condition of…	✓		
Area Immediately around well pad	Record any evidence of/or standing water in area of well	✓		
Dedicated sampling equipment	Condition of…	—		NA
PVC Riser	Condition of riser & survey reference point	✓		

Comments: WL = 186.0' BTM, DRY

Signature(s) [illegible]

Note: S= Satisfactory, U= Unsatisfactory
Check one, if unsatisfactory explain

NSWC Crane
Field Form
Revision: 2
November 2000

MONITORING WELL INSPECTION SHEET

NSWC Crane, CTO 10, Job # N7141

Well ID: 02C22P2

Time: 1257 Date: 7-11-01 Inspector's Name: SIMPSON, RUJAHN

Inspection Item	Types of Problems	Status		Observation
		S	U	
Well Tag	Is it in-place, legible	✓		
Well security	Condition protective case, cap, lock			UN LOCKED, LOCKED AFTER WL MEASUREMENT
Well pad	~~Concrete~~ or gravel & condition	✓		
Well seal	Condition of…	✓		
Area Immediately around well pad	Record any evidence of/or standing water in area of well	✓		
Dedicated sampling equipment	Condition of…	—	—	NA
PVC Riser	Condition of riser & survey reference point	✓		

Comments: WL = DRY TO BTM. 81'

Signature(s) [illegible]

Note: S= Satisfactory, U= Unsatisfactory
Check one, if unsatisfactory explain

NSWC Crane
Field Form
Revision: 2
November, 2000

MONITORING WELL INSPECTION SHEET

NSWC Crane, CTO 10, job # N7141

Well ID: 02C22P3

Time: 1258 **Date:** 7-11-01 **Inspector's Name:** SIMPSON, RUJAHN

Inspection Item	Types of Problems	Status		Observation
		S	U	
Well Tag	Is it in-place, legible	✓		
Well security	Condition protective case, cap, lock			UNLOCKED, LOCKED AFTER WL MEASURMENT
Well pad	Concrete or gravel & condition	✓		
Well seal	Condition of...	✓		
Area Immediately around well pad	Record any evidence of/or standing water in area of well	✓		
Dedicated sampling equipment	Condition of...	—		NA
PVC Riser	Condition of riser & survey reference point	✓		

Comments: WL = 58.67'

Signature(s) [illegible]

Note: S= Satisfactory, U= Unsatisfactory
Check one, if unsatisfactory explain

NSWC Crane
Field Form
Revision: 2
November, 2000

APPENDIX B.7

MONITORING WELL DEVELOPMENT RECORDS

MONITORING WELL DEVELOPMENT RECORD

Well: 02-01
Site: DBG
Date Installed: NA
Date: 7.13.01
Dev. Method: Surged & Pumped
Pump Type: 12V SUB. WHALEN

Depth to Bottom (ft.): 38.0'
Static Water Level Before (ft.): 26.05
Static Water Level After (ft.): 37.5
Screen Length (ft.): ON RECORD?
One Well Vol: 2.0 GAL
Casing ID (in.): 2 inch, PVC

Personnel: SIMPSON/ROJAHN
Drilling Co.: —
Project Name: NSWC Crane
Project Number: 7141

BTM MEASUREMENT UNCHANGED (38)

PUMP RATE = 1 GPM

Time	Cumulative Water Volume (Gal.)	Water Level Readings (Ft. below TOC)	Temperature (Degrees C)	pH	Specific Conductance (Units MS/CM)	Turbidity (NTU)	Remarks (odor, color, etc.)
1050	2.0	37.5'	17.5	6.30	2.213	>999	START, BRN, DRY @ 1052
1102	3.0	32.05	16.5	6.25	2.176	>999	RECHARGE 10 MIN.
1113	3.6	33.22	15.8	6.22	2.191	>999	RECHARGED 10 MIN.
		TOTAL REMOVED = 3.6 GAL					
							PID Readings BH 0.9 PPM
							BZ 0 PPM

MW location and ID were confirmed using figures.

Note: Well was installed as part of a previous RFI and is being redeveloped at this time.

MONITORING WELL DEVELOPMENT RECORD

Well: 02-02
Site: DBG
Date Installed: NA
Date: 7.13.01
Dev. Method: Surged & Pumped
Pump Type: WATTERRIA

Depth to Bottom (ft.): 58.1
Static Water Level Before (ft.): 45.88
Static Water Level After (ft.): 53.0
Screen Length (ft.): ON RECORD?
One Well Vol: 2.1 gal
Casing ID (in.): 2 inch, PVC

Personnel: SIMPSON/ROJAHN
Drilling Co.: —
Project Name: NSWC Crane
Project Number: 7141

NO CHANGE IN BTM. MEASUREMENT

Time	Cumulative Water Volume (Gal.)	Water Level Readings (Ft. below TOC)	Temperature (Degrees C)	pH	Specific Conductance (Units mS/cm)	Turbidity (NTU)	Remarks (odor, color, etc.)
1321	1.8	57.4	18.7	6.22	1.943	210	BLACK FINES, LT SULFUR ODOR
1333	2.5	49.8	18.7	5.64	1.985	450	
1347	3.0	53.03	17.4	5.79	1.898	230	
1404	3.2	50.12	16.0	5.76	1.904	270	
							PUMPED DRY 4X
							PID Readings BH 4.7 PPM
							BZ 0 PPM

MW location and ID were confirmed using figures.

Note: Well was installed as part of a previous REI and is being redeveloped at this time.

MONITORING WELL DEVELOPMENT RECORD

Well: 02-05
Site: DBG
Date Installed: NA
Date: 7-14-01
Dev. Method: Surged & Pumped
Pump Type: WATTERRIA

Depth to Bottom (ft.): 69.3
Static Water Level Before (ft.): 56.93
Static Water Level After (ft.): DRY
Screen Length (ft.): ON RECORD?
One Well Vol: 2.1 gal
Casing ID (in.): 2 inch, PVC

Personnel: SIMPSON / ROJAHN
Drilling Co.: —
Project Name: NSWC Crane
Project Number: 7141

Time	Cumulative Water Volume (Gal.)	Water Level Readings (Ft. below TOC)	Temperature (Degrees C)	pH	Specific Conductance (Units mS/cm)	Turbidity (NTU)	Remarks (odor, color, etc.)
0943	0	56.93	—	—	—	—	PUMPED DRY, WATER IN HOSE NO DISCHARGE
0946	2.5	68.0	17.6	5.99	3.550	130	RECHARGED & PUMP
1001	2.5	60.27	16.9	6.01	3.902	>999	DRY @ 1002
1020	3.5	59.68	18.9	6.18	3.743	650	RECHARGE & PUMP
		TOTAL REMOVED 4.3 GAL					PUMPED DRY 3X
							PID Readings BH 3.2 PPM
							BZ 0 PPM

MW location and ID were confirmed using figures.

Note: Well was installed as part of a previous RFI and is being redeveloped at this time.

MONITORING WELL DEVELOPMENT RECORD

Well: 02-06
Site: DBG
Date Installed: NA
Date: 7-13-01
Dev. Method: Surged & Pumped
Pump Type: WATTERRIA

Depth to Bottom (ft.): 61.45
Static Water Level Before (ft.): 60.45
Static Water Level After (ft.): —
Screen Length (ft.): ON RECORD ?
One Well Vol: 0.2 GAL
Casing ID (in.): 2 inch, PVC

Personnel: ROJAHN / SIMPSON
Drilling Co.: —
Project Name: NSWC Crane
Project Number: 7141

Time	Cumulative Water Volume (Gal.)	Water Level Readings (Ft. below TOC)	Temperature (Degrees C)	pH	Specific Conductance (Units mS/CM)	Turbidity (NTU)	Remarks (odor, color, etc.)
							WE NEED TO
							SAMPLE WITH A
							BAILER IF AT ALL
			ONLY 1.0' WATER				
			NO DEVELOPMENT				
							PID Readings BH 0 PPM
							BZ 0 PPM

MW location and ID were confirmed using figures.

Note: Well was installed as part of a previous [illegible] and is being redeveloped at this time.

MONITORING WELL DEVELOPMENT RECORD

Well: 02-07
Site: DBG
Date Installed: NA
Date: 7.13.01
Dev. Method: Surged & Pumped
Pump Type: WATTERRIA

Depth to Bottom (ft.): 68.0
Static Water Level Before (ft.): 54.85
Static Water Level After (ft.): 62.5
Screen Length (ft.): ON RECORD?
One Well Vol: 2.5 GAL
Casing ID (in.): 2 inch, PVC

Personnel: SIMPSON/ROJAHN
Drilling Co.: ——
Project Name: NSWC Crane
Project Number: 7141

BTM 68' @ END

Time	Cumulative Water Volume (Gal.)	Water Level Readings (Ft. below TOC)	Temperature (Degrees C)	pH	Specific Conductance (Units mS/cm)	Turbidity (NTU)	Remarks (odor, color, etc.)
0830	2.0	63.0±	16.2	6.14	2.502	>999	PUMPED DRY, TO 63',
0837	2.5	63.0±	16.1	5.80	2.477	↓	↓
0846	3.0	63.0±	16.6	5.91	2.551	↓	↓
0856	4.0	63.0±	15.7	5.32	2.647	800	↓
0906	5.5	62.5	—	—	—	—	5
							PUMPED DRY 4 TIMES
							REMOVED 5.5 GAL. TOTAL
							PID Readings BH 0.3 PPM
							BZ 0 PPM

MW location and ID were confirmed using figures.

Note: Well was installed as part of a previous RFI and is being redeveloped at this time.

MONITORING WELL DEVELOPMENT RECORD

Well: 02-08
Site: DBG
Date Installed: NA
Date: 7-13-01
Dev. Method: Surged & Pumped
Pump Type: WATTERRIA

Depth to Bottom (ft.): 63.0
Static Water Level Before (ft.): 48.94
Static Water Level After (ft.): DRY
Screen Length (ft.): ON RECORD ?
One Well Vol: 2.3 GAL.
Casing ID (in.): 2 inch, PVC

Personnel: SIMPSON/ROJAHN
Drilling Co.: —
Project Name: NSWC Crane
Project Number: 7141

BTM. = 63.0 @ END

Time	Cumulative Water Volume (Gal.)	Water Level Readings (Ft. below TOC)	Temperature (Degrees C)	pH	Specific Conductance (Units MS/CM)	Turbidity (NTU)	Remarks (odor, color, etc.)
0946	2.0	61.0±	17.4	4.86	3.011	250	PUMPED DRY
0949	3.5	61.0±	17.3	5.60	3.059	>999	↓
1007	4.8	61.0±	17.4	5.58	2.786	990	↓
1025	5.5	61.0±	17.5	5.55	2.686	140	↓
							PUMPED DRY 4 X
							RECHARGED 10 MIN.
							EACH TIME
							PID Readings BH 0 PPM
							BZ 0 PPM

MW location and ID were confirmed using figures.

Note: Well was installed as part of a previous [illegible] and is being redeveloped at this time.

MONITORING WELL DEVELOPMENT RECORD

Well: 02C 10P3
Site: DBG
Date Installed: NA
Date : 7-12-01
Dev. Method: Surged & Pumped
Pump Type: WHALE

Depth to Bottom (ft.): 40.2
Static Water Level Before (ft.): 29.45
Static Water Level After (ft.): DRY
Screen Length (ft.): ON RECORD?
One Well Vol: 6.6L
Casing ID (in.): 2 inch, PVC

Personnel: T. ROJAHN
Drilling Co.: ACE
Project Name: NSWC Crane
Project Number: 7141

Time	Cumulative Water Volume (~~Gal.~~ L)	Water Level Readings (Ft. below TOC)	Temperature (Degrees C)	pH	Specific Conductance (Units ____)	Turbidity (NTU)	Remarks (odor, color, etc.)
1230	—	29.45	—	—	—	—	START SURGE FOR 10 MIN
1238	0	29.45	13.71	8.78	0.165	+1100	5 LPM BRN
1255	35L	DRY	—	—	—	—	DRY BRN
1300	35L	31.80	—	—	—	—	RECHARGE —
1305	35L	30.44	12.76	5.41	0.287	+1100	RECHARGE & RESTART PUMP
1308	50L	DRY	—	—	—	—	DRY
1313	50L	32.89	—	—	—	—	RECHARGE ~~& RESTART~~ TL
1318	50L	30.75	12.61	5.04	0.286	200	RECHARGE & RESTART PUMP
1322	70L	DRY	—	—	—	—	END DEVELOPMENT
							PID Readings BH 0.4 PPM
							BZ 0 PPM

MW location and ID were confirmed using figures.

Note: Well was installed as part of a previous RFI and is being redeveloped at this time.

MONITORING WELL DEVELOPMENT RECORD

Well: 02C11 P3
Site: DBG
Date Installed: NA
Date: 7.13.01
Dev. Method: Surged & Pumped
Pump Type: 12V SUB. WHALER

Depth to Bottom (ft.): 45.8
Static Water Level Before (ft.): 35.89
Static Water Level After (ft.): 43.10
Screen Length (ft.): ON RECORD?
One Well Vol: 1.6 gal.
Casing ID (in.): 2 inch, PVC

Personnel: SIMPSON/ROJAHN
Drilling Co.: —
Project Name: NSWC Crane
Project Number: 7141

PUMP RATE = 1 GPM

Time	Cumulative Water Volume (Gal.)	Water Level Readings (Ft. below TOC)	Temperature (Degrees C)	pH	Specific Conductance (Units MS/CM)	Turbidity (NTU)	Remarks (odor, color, etc.)
1431	2.5	44.5	15.3	4.26	1.754	>999	GRAY, DRY @ 1435
1450	3.4	39.89	14.47	4.82	1.657	700	DRY @ 1451
1505	5.0	40.00	14.3	4.91	1.660	310	DRY @ 1507
			TOTAL REMOVED 5 GAL				PUMPED DRY 3X
							PID Readings BH 0 PPM
							BZ 0 PPM

MW location and ID were confirmed using figures.

Note: Well was installed as part of a previous PFI and is being redeveloped at this time.

14.11

MONITORING WELL DEVELOPMENT RECORD

Well: 02C12P3
Site: DBG
Date Installed: NA
Date: 7·14·01
Dev. Method: Surged & Pumped
Pump Type: 12V SUB. WHALER

Depth to Bottom (ft.): 37.4
Static Water Level Before (ft.): 23.85
Static Water Level After (ft.): 37.0
Screen Length (ft.): ON RECORD ?
One Well Vol: 2.2 gal
Casing ID (in.): 2 inch, PVC

Personnel: SIMPSON/ROJAHN
Drilling Co.: —
Project Name: NSWC Crane
Project Number: 7141

NO CHANGE ON BTM. MEASUREMENT

Time	Cumulative Water Volume (Gal.)	Water Level Readings (Ft. below TOC)	Temperature (Degrees C)	pH	Specific Conductance (Units mS/cm)	Turbidity (NTU)	Remarks (odor, color, etc.)
0849	~~23.85~~	23.85	14.7	5.71	3.122	>999	GRAY, START
0854	6.0	37.00	13.5	5.49	2.670	>999	DRY
0917	6.0	33.10	—	—	—	—	RESTART
0919	7.5	37.00	14.1	6.02	1.497	950	DRY
0935	7.5	34.34	—	—	—	—	RESTART
0936	8.5	37.00	13.5	5.87	2.647	500	DRY
							PUMPED DRY 3X
		TOTAL REMOVED 8.5 GAL					
							PID Readings BH 0.6 PPM
							BZ 0 PPM

MW location and ID were confirmed using figures.

Note: Well was installed as part of a previous RFI and is being redeveloped at this time.

APPENDIX B.8

MONITORING WELL WATER LEVEL MEASUREMENT SHEETS

14...

WATER LEVEL MEASUREMENT SHEET

Project Name: NSWC Crane
Location: Crane, IN
Weather Conditions: 83°F CLEAR
NO RAIN LAST 3 DAYS
LAST RAIN SUN PM/MON AM

Project No.: CTO 10 # 7141
Personnel: SIMPSON / ROJAHN
Measuring Device: SLOPE INDICATOR
Remarks:

Well ID	Date	Time	Water Level *	Thickness of Free Product	PID Reading ppm RP	PID Reading ppm BZ	Comments
02-01	7.11.01	1611	25.87	NA			
02-02		1601	45.70				
02-03		1532	43.56				
02-04		1535	38.38				
02-05		1410	56.75				
02-06		1607	60.24				
02-07		1605	54.65				
02-08		1501	48.82				
02C09		1245	170.25				
02C09P2		1243	DRY				BTM 96.0
02C10		1422	146.38				
02C10P2		1423	40.87				

* All measurements to the nearest 0.01 foot

Signature(s):

WATER LEVEL MEASUREMENT SHEET

Project Name: NSWC Crane
Location: Crane, IN
Weather Conditions: _____

Project No.: CTO 10 # 7141
Personnel: SIMPSON / ROJAHN
Measuring Device: _____
Remarks: _____

Well ID	Date	Time	Water Level *	Thickness of Free Product	PID Reading ppm RP	PID Reading ppm BZ	Comments
02C10P3	7-11-01	1425	29.28	NA			
02C11		1512	149.23				
02C11P2		1513	73.64				
02C11P3		1515	35.59				
02C12		1404	171.22				
02C12P2		1405	88.98				
02C12P3		1406	23.67				
02C13		1413	58.25				
02C13P2		1414	40.11				
02C13P3		1415	10.48				
02C14		1548	DRY				BTM 148.0
02C14P2		1550	63.95				

* All measurements to the nearest 0.01 foot

Signature(s): [illegible]

WATER LEVEL MEASUREMENT SHEET

Project Name: NSWC Crane
Location: Crane, IN
Weather Conditions: _____

Project No.: CTO 10 # 7141
Personnel: SIMPSON / ROJAHN
Measuring Device: _____
Remarks: _____

Well ID	Date	Time	Water Level *	Thickness of Free Product	PID Reading ppm RP	PID Reading ppm BZ	Comments
02C14P3	7.11.01	1551	37.13	NA			
02C15		1524	69.90				
02C15P2		1525	34.28				
02C16		1507	DRY				BTM 80.0
02C16P2		1506	43.03				
02C17		1453	84.75				
02C17P2		1455	48.91				
02C17P3		1456	DRY				BTM 29.4
02C18		1442	88.50				
02C18P2		1443	52.86				
02C18P3		1442	21.15				BTM 21.27
02C19		1620	87.01				

* All measurements to the nearest 0.01 foot

Signature(s): [illegible]

WATER LEVEL MEASUREMENT SHEET

Project Name: NSWC Crane
Location: Crane, IN
Weather Conditions: _____

Project No.: CTO 10 # 7141
Personnel: SIMPSON / ROJAHN
Measuring Device: _____
Remarks: _____

Well ID	Date	Time	Water Level *	Thickness of Free Product	PID Reading ppm RP	PID Reading ppm BZ	Comments
02C19P2	7.11.01	1621	48.89	NA			
02C19 P3		1622	DRY				BTM 19.0
02C 20		1432	137.54				
02C20P2		1434	58.00				
02C20P3		1435	17.97				
02C22		1255	DRY				BTM 186.0
02C22P2		1257	DRY				BTM 81.0
02C22P3		1258	58.67				

* All measurements to the nearest 0.01 foot

Signature(s): [illegible]

APPENDIX C

FIELD LOG BOOKS

BOOK # 1330

7.12.01

— DAILY SUMMARY —

ON SITE: T + NUS KEITH S.
TERRY R.

SURVEYORS DAVID M.
RICH J.

1 MW DEVELOPED

DBG

TITLE NSWC CRANE

PROJECT NO. 7141 (DBG)

BOOK NO. 1330

THUR. 7.12.01

Work continued from Page WEATHER: NICE 68-83°F CLOUDY

0655 KS & TR @ BLD 3245 SWITCH JOBS JEEP TRAIL COMPLETE PREP. FOR WELL DEVELOPMENT @ DBG + PAPER WORK

1200 TR TO DBG & START DEVELOPMENT
KS CALL WITH TOM DICKSON & TOM JOHNSTON ABOUT MGBG

1320 KS CALLED LAUCKS (HUGH P.) TO CHECK ON BOTTLE ORDER FOR DBG (NEED TOC BOTTLES)

1325 KS TO DBG & HELP WITH DEVELOPMENT
COMPLETED DEVELOPMENT @ 02C10P3
KS & TR LAYED OUT ALL SW/SD LOCATIONS

1540 RETURN TO 3245 DECON
CALLED DRILLERS EFS GREG C. AND SCHEDULED DPT RIG FOR 0700 ON 7.24.01

1710 OFF SITE TO HOME DEPOT & FEDEX
SET 1 YSI & 1 TURB METER BACK TO US ENVIRONMENTAL

SCIENTIFIC BINDERY PRODUCTIONS CHICAGO 60605 MADE IN USA

Work continued to Page

SIGNATURE [signature] DATE 7.12.01

DISCLOSED TO AND UNDERSTOOD BY DATE WITNESS DATE

VOID
KES 7.12.01

TITLE NSWC CRANE

PROJECT NO. 7141
BOOK NO. 1330

Work continued from Page

ROUND 1 DBG WELL INFO.

WELL ID	DATE DEVEL.	WL 7.11.01	DATE SAMPLED	QA COLLECTED
02-01	7.13.01 •	25.87	7.27.01	—
02-02	7.13.01 *	45.70	7.28.01	—
02-05	7.14.01 *	56.75	7.26.01	—
02-06	—	60.24	NO SAMPLE	—
02-07	7.13.01 *	54.65	7.29.01	—
02-08	7.13.01 *	48.82	7.26.01	—
02-40P3	7.12.01 •	29.28	7.28.01	DUP + MS/MSD
02-41P3	7.13.01 •	35.59	7.27.01	—
02-42P3	7.14.01 •	23.67	7.25.01	—

ONLY <1' OF WATER

DEVELOPMENT
* WATTERRA
• 12V SUB. WHALER

ALL SAMPLED USING A BLADDER PUMP

Work continued to Page

SIGNATURE [illegible]

DATE 7.12.01

DISCLOSED TO AND UNDERSTOOD BY

DATE

WITNESS

DATE

SCIENTIFIC BINDERY PRODUCTIONS CHICAGO 60605 MADE IN USA

B 100 P ©

7.13.01

— DAILY SUMMARY —

ON SITE, T + NUS; KEITH S.
TERRY R.

6 MWs DEVELOPED

SEE ALSO: FIELD FORMS

TITLE NSWC CRANE

PROJECT NO. 7141

BOOK NO. 1330

FRIDAY 7-13-01

Work continued from Page WEATHER: NICE SUNNY 64-82°F

0655 KS & TR ON SITE, FAX HOURS FOR WEEK TO OFFICE. LOAD TRUCKS FOR WELL DEVELOPMENT

0740 TO DBG SETUP ON 02-07 COMPLETE 07 TO

0915 02-06. 02-06 ONLY 1' OF WATER, IF IT CAN BE SAMPLE WILL NEED TO USE A BAILER

0925 TO MW 02-08 COMPLETE 08 TO MW 02-01

1035 COMPLETE 02-01 @ 1125

1125 TO BLD 3245 DECON EQ, TO LUNCH

1350 RETURN TO DBG & SET-UP ON 02-02

1414 COMPLETE 02 TO 11P3 COMPLETE 11P3 TO BLD 3245 DECON

HAVING TROUBLE WITH THE WATER QUALITY METER PH DRIFTING. CALL US ENVIRONMENTAL, SCOTT, HE WILL SEND A NEW PH PROBE FOR MONDAY

CLEAN UP WORK AREA & TRUCKS

1720 DEPART SITE TO WAL-MART

SCIENTIFIC BINDERY PRODUCTIONS CHICAGO 60605 MADE IN USA

Work continued to Page

SIGNATURE

DATE 7-13-01

DISCLOSED TO AND UNDERSTOOD BY DATE WITNESS DATE

7.14.01

— DAILY SUMMARY —

ON SITE, T+NUS; K. SIMPSON
T. ROJAHN

DEVELOPED 2 WELLS @ DBG
ALL 9 WELLS DEVELOPED

BRUSHED HOGGED MGBG SITE

WLs @ MGBG (28)

MOVED 500 GAL TANK TO MGBG
WITH IDW LABEL

SEE ALSO FIELD FORMS

SAT 7.14.01

Work continued from Page WEATHER: NICE 68 - 83°F SUNNY

0655 KS & TR @ BLD 3245 LOAD EQ. FOR GW DEVELOPMENT @ DBG

0720 TO MGBG TOOK PHOTOS OF SITE TO DBG SET-UP ON 12P3 COMPLETE DEVELOPMENT START 02-05 COMPLETE DEVELOPMENT ALL 9 WELLS COMPLETE

1030 TO BLD 3245 DECON EQ. EMPTY 300 TANK

1240 TO MGBG WITH 500 GAL TANK, TANK WILL BE LEFT @ MGBG

MET DENNY W. @ MGBG HE IS CUTTING THE AREA BETWEEN BUNKERS 1407 & 1409

WE STRAPPED 500 GAL TANK (EMPTY) TO WELL 01-17

START WL/WELL INVENTORY

1520 DENNY W. COMPLETE CUTTING OF AREA & DEPARTS SITE

TR & KS COMPLETE WL @ MGBG 28 WELLS RETURN TO BLD 3245 CLEAN-UP

1820 TO HOME DEPOT FOR WELL REPAIR SUPPLIES

7.15.01

MGBG

— DAILY SUMMARY —

ON SITE, T+NUS, KEITH S.
TERRY R.

DEVELOPED 4 MW @ MGBG
REPAIRED MWs, SEE BELOW

SEE ALSO, FIELD FORMS

SUMMARY OF MGBG WELL REPAIR

01-06 - REPLACED PVC RISER, WAS BROKEN @ GROUND

01-07 - NEW CEMENT PAD & REPLACED PVC RISER WAS BROKEN AT GRADE, BELOW PAD

01-15 - REPLACED PVC RISER, WAS BROKEN @ GROUND

01-23 LARGE HOLE 4' EAST OF WELL, FILLED WITH 3 BAGS OF BENTONITE COVERED WITH 300 LBS OF FINE LIMESTONE GRAVEL.

MARKED ALL WELLS FOR SURVEY REFERANCE.

SUNDAY 7.15.01

Work continued from Page WEATHER: NICE 70-85°F SUNNY

0650 KS & TR @ BLD 3245 LOAD TRUCK FOR MGBG DEVELOPMENT & WELL REPAIR

0700 TO MGBG DEVELOPED MW 01C01 USING A WATTERRA PUMP & 3/4" PE TUBING. 165' TO BTM COMPLETE DEVELOPMENT

1015 TO MW 01-23 FILLED HOLE CLOSE TO WELL 3 BAGS OF BENTONITE + 300 LBS OF FINE GRAVEL

1041 START DEVELOPMENT OF 01-23, COMPLETE 23

1150 TO BLD 3245 DECON, LUNCH, PAPER WORK

1400 LOAD TRUCK RETURN TO MGBG SET-UP TO REPAIR & DEVELOP MW 01-07

1700 @ MW 01-06 DEVELOP & REPAIR COMPLETE 01-06

1805 TO 01-07 TO COMPLETE DEVELOPMENT DUMP WATER INTO 500 GAL TANK WHICH IS BEHIND BUNKER 1409 TO BLD 3245 UNLOAD TRUCKS, CLEAN-UP

1920 DEPART SITE

7.16.01
MGBG

— DAILY SUMMARY —

ON SITE; T+ NUS, KEITH S.
TERRY R.

6 MW DEVELOPED

7.16.01 @ 1810 120 GALLONS OF IDW IN 500 GAL TANK @ BUNKER 1409

SEE ALSO; FIELD FORMS

MONDAY 7.16.01

Work continued from Page WEATHER: 72-86°F SUNNY

0650 KS & TR @ BLD 3245 CLEAN EQ FROM DEVEL. ON SUNDAY RESTOCK TRUCK FOR DEV. @ MGBG

0715 KS TO TOOLTEST TO PAY DENNY FOR CUTTING MGBG. DENNY WAS NOT IN.

0740 @ BLD 3245 PAPER WORK AND CLEAN-UP

0825 KS & TR TO MGBG

SET-UP ON 01-15 SURGE & DEVELOP. REPAIRED

1015 RISER COMPLETE 01-15 MOVED TO 01-19

1125 COMPLETE 01-19 CLEAN-UP TO BLD 3245

1240 LUNCH RETURN TO MGBG

SET-UP ON WELL 01-21 FOR DEVELOPMENT

1440 COMPLETE 01-21 TO 01-24 COMPLETE 01-24 DUMP PURGE WATER SET-UP ON 01-08

1646 COMPLETE 01-08 DUMP PURGE WATER

1700 SET-UP ON 01-09 COMPLETE DEVELOPMENT

1810 DUMP PURGE WATER, TO BLD 3245 DECON, PAPER WORK

1900 DEPART SITE

7.17.01

— DAILY SUMMARY —

ON SITE; T + NUS: KEITH S.
TERRY R.

LAY-OUT @ MGBG

TUESDAY 7.17.01

Work continued from Page WEATHER: OVERCAST 70-86°F

0700 RS & TR PREP FOR SITE LAY-OUT @ MGBG
SBs & MW + SW/SDs
TALKED WITH TOM BRENT KICK-OFF MEETING
FOR THE MGBG WILL BE TUESDAY 8.7.01
0815 TO MGBG
LUNCH @ 1240 TO BLD 3245 PHONE CALLS
1330 RETURN TO MGBG TO LAY-OUT MW
COMPLETE LAY-OUT OF SB, MW & SD
NEED TO LAY-OUT 3 SW 01SW3, 4 & 5
TO BLD 3245 UNLOAD TRUCK
1650 DEPART SITE

7.18.01

— DAILY SUMMARY —

ON SITE, T+ NUS: KEITH S.
TERRY R

END OF SHIFT
TRAVEL TO PGH

TITLE NSWC CRANE

PROJECT NO. 3959

BOOK NO. 1330

WED 7.18.01

Work continued from Page WEATHER: OVER CAST 80°F

0620 KS & TR CHECK-OUT OF HOTEL TO SITE

0650 @ SITE END OF SHIFT CLEAN-UP

KS TO PW FOR DBG DIG PERMIT

DIG PERMIT IS NOT READY WILL PICK IT UP ON MONDAY.

0800 @ BLD 3245

0820 TR TO AIRPORT / HOME

KS PAPER WORK & CLEAN

0920 TO AIRPORT / HOME

END OF SHIFT

SIGNATURE

DATE 7-18-01

DISCLOSED TO AND UNDERSTOOD BY

DATE

WITNESS

DATE

7.23.01

— DAILY SUMMARY —

ON SITE: T + NUS; KEITH SIMPSON
TERRY ROJAHN
KEITH HENN

SURVEYORS; DAVE M.
RICH J.

EFS; ADAM C.

TRAVEL TO CRANE
START OF SHIFT

MONDAY 7.23.01

Work continued from Page WEATHER: CRANE HOT 90°F SUNNY

0800 KEITH SIMPSON, TERRY ROJAHN & KEITH HENN @ PGH AIRPORT TO NSWC CRANE, IN.

1300 AT BID 3245 CRANE PREP FOR SAMPLING ON TUESDAY.

KS TO CRANE LAB & PW FOR DENSITY TUBES & DIG PERMIT

1600 TERRY R. GAVE H & S TRAINING

1900 DEPART SITE TO HOTEL

VOID

KES

Work continued from Page

5

10

15

VOID

20

RES

25

30

35

SCIENTIFIC BINDERY PRODUCTIONS CHICAGO 60605 MADE IN USA

Work continued to Page

SIGNATURE

DATE

DISCLOSED TO AND UNDERSTOOD BY

DATE

WITNESS

DATE

B 100 P ©

7.24.01

— DAILY SUMMARY —

ON SITE; T+NUS: KEITH S.
TERRY R.
KEITH H

EFS ADAM CERTAIN @ 0730

9 SBs COMPLETED
1 DUP

SEE ALSO: COCs, LOG BOOK #S 2494 & 2493, SAMPLE LOG SHEETS & BORING LOGS

TITLE NSWC CRANE

TUES 7.24.01

PROJECT NO. 7141

BOOK NO. 1330

Work continued from Page WEATHER: HOT 80-92°F

0700 @ BLD 3245 LOAD SUV CAL PID
0810 TO DBG SET-UP AND COMPLETE 02SB04
1000 KS RETURNED TO BLD 3245 TO RUN QA FOR MNA PARAMETERS
1200 LUNCH KS, TR, KH & AC
1250 TALKED WITH RALPH BASINSKI, THE FIELD CREW DOES NOT HAVE THE EQUIPMENT NEEDED FOR THE BULK DENSITY TEST SAMPLING. RALPH CHECKED IN TO THE NEED FOR THIS TEST AN WE ARE GOING TO DROP BULK DENSITY & GRAIN SIZE FROM JOB 7141
1330 COMPLETE NA QA CHECKS (SEE PG 181)
PREP. FOR GW SAMPLING - CAL. YSI + TURB
PREP. BOTTLE SETS
1435 TO DBG PICK-UP DYE SAMPLES TO CRANE LAB
TO BLD 3245 RAN RB07240101 ON DISPOSABLE PLASTIC TROWEL
KH, TR & AC @ BLD 3245 UNLOAD TRUCKS STORE SAMPLES & PAPER WORK
1830 DEPART SITE FOR HOTEL

SCIENTIFIC BINDERY PRODUCTIONS CHICAGO 60605 MADE IN USA

Work continued to Page

SIGNATURE

DISCLOSED TO AND UNDERSTOOD BY DATE WITNESS

DATE 7.24.01

DATE

MNA DBG 7.24.01

— TESTS RUN AT WELL —

HYDROGEN SULFIDE TEST KIT (H_2S)
HACH MODEL HS-C
CAT # 2537800
TEST PAPER LOT # A1080

DISSOLVED OXYGEN CHEMETS KIT (O_2)
K-7501 0-1 mg/L
SELF-FILLING AMPOULES R-7501

K-7512 1-12 mg/L
SELF-FILLING AMPOULES R-7512

TOTAL ALKALINITY CHEMETRICS ($CaCO_3$)
HAND-HELD TITRATION CELLS
K-9810 10-100 PPM
K-9815 50-500 PPM
K-9820 100-1000 PPM

CARBON DIOXIDE CHEMETRICS (CO_2)
K-1910 10-100 PPM
K-1920 100-1000 PPM
K-1925 250-2500 PPM

SULFIDE HACH DR 850 COLORIMETER (S^{2})
REAGENT 1 CAT. # 1816-32 LOT# A1029
REAGENT 2 CAT. # 1817-32 LOT# A1031

DIVALENT IRON HACH DR-850 COLORIMETER (Fe^{+2})
REAGENT CAT. # 1037-69 LOT# A1187
EXP JULY 2006

7.24-01
Work continued from Page

SEE ALSO PG 115 OF THIS LOG BOOK

QA CHECKS FOR THE HACH DR/850
COLORIMETER SN 980950003985

RAN INSTRUMENT PERFORMANCE VERIFICATION
HACH CAT. # 27639-00 LOT# A1096, EXP 802

@1040

WL	STD 1	STD 2	STD 3	
520	0.627 -0.001 ✓	1.261 -0.005 ✓	1.827 -0.007 ✓	- METER READING OK
610	0.621 -0.004 ✓	1.271 +0.008 ✓	1.843 +0.015 ✓	- METER READING OK

@1050 NITRATE: RAN A STANDARD SOLUTION OF NITRATE.
1.00 mg/L AS N LOT A1131

AT STEP 3 OF TEST PROGRAM SS USED 5 ML OF STANDARD AND 10 ML OF DI WATER FOR A TOTAL OF 15 ML SAMPLE. A 3X DILUTION
NOTE: TEST LIMIT IS ~~vs~~ .55 mg/L & STANDARD IS 1 mg/L

REAGENTS: NITRAVER 6 NITRATE
CAT # 21072-49 LOT A0350
NITRIVER 3 NITRATE
CAT # 21071-69 LOT A1096

RESULT = 0.36 X 3 = 1.08 mg/L NO3-N OK

DBG 7.25.01

QA CHECK ON HACH DR/850 (CONTINUED)

NITRITE STANDARD SOLUTION
250 ug/ml AS NO_2-N
CAT# 23402-49, LOT# 1173, EXP 9.29.01

DILUTED 0.5 ML OF STANDARD INTO 500 ML OF DI = 0.250 mg/L NO_2-N

@ 1140 RAN PROGRAM 62 - NITRITE LR
RESULT = 0.247 mg/L ✓ OK

REAGENT NITRIVER 3 NITRITE
CAT# 25120-25, LOT # A1075

— DAILY SUMMARY 7.25.01 —

ON SITE: T+ NUS, KEITH H.
TERRY R.
KEITH S.

EFS ADAM C. ARRIVE 0705
DEPART 1710

11 SBs COMPLETED (ALL 20 COMPLETE)
1 MW SAMPLED

1 COOLER SHIPPED TO LAUCKS

SEE ALSO: LOG BOOK #s 2494 & 2493, COC, SAMPLE LOG SHEETS, BORING LOGS

TITLE NSWC CRANE

PROJECT NO. 7141

BOOK NO. 1330

WED. 7.25-01

Work continued from Page WEATHER: 78-88°F NO RAIN - RAIN @ 1635

0650 KS, TR & KH @ BID 3245 PREP FOR GW & SB SAMPLING

0705 ADAM C. ON SITE.

0735 TO DBG TR & KH START SBs, KS TO MW 02C12P3 SET-UP PURGE & SAMPLE

KS COMPLETES SAMPLING & FIELD NA TO BID 3245

1135 KH & TR @ BID 3245 CLEAN-UP RESTOCK SUV KS DECON PUMP. TO LUNCH

1250 KS & TR RETURN TO SBs @ DBG, KS WORK ON NA PARAMETERS & COCs

1440 KS TO DBG PICK-UP SAMPLES TO CRANE LAB DROP OFF DYE SAMPLES TO BID 3245

1540 PACK SAMPLES FOR FEDEX TO LAUCKS

COLLECTED RB 07250101 @ 1655 ON A DPT STAINLESS STEEL CUTTING SHOE

COLLECTED RB 07250102 @ 1700 ON AKS THE BLADDER PUMP

THUNDER STORM FROM 1630 → 1655

1700 TR, KH & AC @ BID 3245 ALL 20 SBs COMPLETE CLEAN EQ. UNLOAD TRUCKS

1800 DEPART SITE FOR FEDEX & WAL-MART

SIGNATURE

DATE 7.25-01

DISCLOSED TO AND UNDERSTOOD BY DATE WITNESS DATE

7.26.01

— DAILY SUMMARY —

ON SITE: T+NUS, KEITH S.
KEITH H.
TERRY R.

EFS ADAM C. ARRIVE 0700
DEPART 1000

2 MWs SAMPLED
TRIED 02-06 DRY

SEE ALSO: LOG BOOK #s 2494 & 2493,
SAMPLE LOG SHEETS, COC

THUR 7.26.01

Work continued from Page WEATHER: 0.3" RAIN OVERNITE 74-87°F

0650 KS, TR & KH @ 3245 PREP FOR GW SAMPLING
0720 KS & KH TO DBG SET-UP ON 02-05 PURGE TRAINING FOR KEITH HENN & TERRY ROJAHN ON FIELD MNA
0840 ADAM C. COMPLETE BACKFILL OF SB TO BLD 3245 CLEAN-UP & OFF SITE TO HOME OFFICE
1050 COMPLETE 02-05 TO BLD 3245 UNLOAD SAMPLES RESTOCK TRUCK LUNCH
1210 TR TO DBG TO START GW SAMPLING KS & KH RUN NA TEST
1310 KS & KH TO DBG COLLECTED ALL DYE SAMPLES
1530 TO CRANE LAB DROP-OFF DYE SAMPLES
1600 RETURN TO DBG - TRIED TO SAMPLE WELL 02-06 DRY < 1' OF WATER NOT SAMPLED.
1635 HELP TR COMPLETE SAMPLING @ 02-08. RETURN TO BLD 3245 CLEAN EQ. RUN NA PAPER WORK.
1825 DEPART SITE

7.27.01

— DAILY SUMMARY —

ON SITE: T+NUS, KEITH H.
KEITH S.
TERRY R.

SURVEYORS, RICH M.
DAVE J.

2 MWs SAMPLED
6 SD SAMPLES COLLECTED

SHIPPED 1 COOLER TO LAUCKS

SEE ALSO: LOG BOOK #S 2493 & 2494,
SAMPLE LOG SHEETS, COCs

FRIDAY 7.27.01

Work continued from Page WEATHER: NICE 68-79°F SUNNY

0650 KS, TR & KH ON SITE CAL. EQ. LOAD TRUCKS
0740 KS & KH TO DBG SET-UP & PURGE 0211P3
KH PURGING 0211P3 KS & TR START SW/SD
0940 SAMPLING TO 02SW/SD02 NO FLOW
COLLECTED SD + DUP + MS/MSD AT THIS LOCATION
1020 TO 02SD03 SAMPLED - STOPPED & CHECKED ON KH
1100 TO 02SD01 COMPLETE SAMPLING NO FLOW
1120 SD ONLY TO BLD 3245 LUNCH
RETURN TO BLD 3245 KH TO DBG FOR
GW SAMPLING TR DECON PUMP
1315 KH RETURN TO DBG FOR GW SAMPLING
KS & TR TO DBG FOR SD SAMPLINS
COMPLETE ALL 6 SD LOCATIONS NO FLOW @
1610 THE 6 LOCATIONS, (NO SW SAMPLES)
TO DBG MW 02-01 AND CHECK ON KEITH H.
GAVE SURVEYORS LIST OF LOCATION + FIG. FOR
DBG ALSO MAP FOR 28 EXISTING WELLS @ MGBG
1645 KS & TR TO BLD 3245 CLEAN-UP + PAPER WORK
1800 KS TO WAL-MART & LOWES FOR SUPPLIES
TR TO DBG TO HELP KH FINISH ~~01-02~~ KS
02-01 SAMPLING
1930 KH & TR DEPART SITE

7.28.01

— DAILY SUMMARY —

ON SITE, T + NUS: TERRY R.
KEITH H.
KEITH S.

2 MWs SAMPLED
+ MS/MSD & DUP

COMPLETE LAY-OUT @ ~~DBG~~ RS MGBG

SEE ALSO: LOG BOOK #s 2493, 2494,
COCs, SAMPLE LOG SHEETS

TITLE NSWC CRANE

PROJECT NO. 7141

BOOK NO. 1330

SAT 7.28.01

Work continued from Page WEATHER: 68-83°F OVERCAST 0.25" IN AFTER NOON

0655 KS KH & TR @ BLD 3245 CAL EQ. DECON PUMP, RUN NA FOR WELL 02-01

0745 KH TO DBG MW 0210P3 TO PURGE & SAMPLE.

0920 KS & TR TO DBG & HELP KH WITH GW SAMPLING

1015 TO MGBG KS & TR TO LAY SW LOCATIONS SEE LOG BOOK # 1340

COMPLETED SAMPLING OF 0210P3 ALSO COLLECTED MS/MSD & DUP @ THIS WELL

1420 SET-UP @ MW 02-02 PURGE & SAMPLE

KS & KH ON SITE TOUR OF JEEP TRAIL &

1630 MGBG RETURN TO BLD 3245

KH RETURN TO DBG TO HELP TERRY WITH NA & SAMPLING @ 02-02

KS PAPER WORK

1800 KH RETURN TO BLD 3245 CLEAN-UP

KH DEPARTS SITE FOR HOTEL HE WILL TRAVEL HOME ON SUN. 7.29.01 AM

1940 TR @ BLD 3245 COMPLETE MW 02-02 EMPTY SW SAMPLES TO FRIDGE

2005 DEPART SITE

SCIENTIFIC BINDERY PRODUCTIONS CHICAGO 60605 MADE IN USA

Work continued to Page

SIGNATURE

DATE 7.28.01

DISCLOSED TO AND UNDERSTOOD BY DATE WITNESS DATE

7.29.01

— DAILY SUMMARY —

ON SITE: T + NUS, KEITH S.
TERRY R.

1 MW SAMPLED ALL ROUND 1 DBG WELLS SAMPLED

02 SW/SD 07 SAMPLED

SEE ALSO: COCs, SAMPLE LOG SHEETS

SUNDAY 7.29.01

Work continued from Page WEATHER: 70-88°F CLOUDY 0.40" RAIN OVERNITE

0655 KS & TR @ BLD 3245 DECON, CAL EQ. RUN NA
FROM MW 02GWC10P3 + DUP & 02-02
LOAD SUV FOR GW SAMPLING MW 02-02
0810 COLLECTED RB072901 01 ON A PE BLADDER
FOR BLADDER PUMP
0940 TO DBG SET-UP ON MW 02-07 PURGE
1050 TR PURGING 02-07 KS TO SW SIDE OF SITE
LOOKING FOR SPRINGS/SEEPS. FOUND 1 SPRING ESE OF
THE ABG BREAK ROOM 15 YDS BEHIND STORAGE TRAILER
1125 RETURN TO DBG TAKE OVER PURGE FOR TR. TR TO
BLD 3245 1215 TR RETURNED TO 02-07

SEEP SAMPLING

PG. 5-17 WP FIG. 5-19

ONE SW SAMPLE WAS COLLECTED DURING THE ROUND 1 DBG FIELD EFFORT. LOCATIONS 02SW01 THRU 06 WERE DRY. 02SW/SD01 THRU 06 (6 LOCATIONS) WERE SAMPLED FOR SEDIMENT (SD) ON 7.27.01 AND ALL STREAM BEDS WERE DRY AT THAT TIME. ALSO, ALL OF THE ABOVE 6 LOCATIONS WERE DRY ON 7.12.01 DURING LOCATIONS LAY-OUT.

AT ALL TIMES DURING THE ROUND 1 FIELD EFFORT AT THE DBG SITE, DURING LAY-OUT & SAMPLING, THE FIELD CREW WERE ON THE "LOOK-OUT" FOR SEEP/SPRING LOCATIONS ONLY ONE WAS FOUND.

A SEARCH WAS MADE OF THE STEEPER SLOPES FOR SEEPS. THE SEARCH AREAS WERE MAINLY ON THE SW SIDE (TOWARDS THE ABG) OF THE SITE. THE SEARCH AREAS CAN BE FOUND ON A MARKED-UP COPY OF FIG. 5-19 AS WELL AS THE LOCATION OF 02SW/SD07 IN THE CTO 10 FILE SECTION DBG SW/SD SAMPLING.

1230 KS TO BLD 3245 PICK-UP SUPPLIES TO SAMPLE 02SW/SD07
1330 TO DBG SAMPLED 02SW/SD07 + DUP & MS/MSD ON SW
RETURN TO 02-07 TO HELP TR COMPLETE SAMPLING & NA
1705 TO BLD 3245 UNLOAD TRUCK
1730 DEPART SITE

7.30.01

— DAILY SUMMARY —

ON SITE: T+ NUS, KEITH S.
TERRY R.

ALSO SEE: COCs, LOG BOOK # MGBG 1340

MONDAY 7.30.01

Work continued from Page WEATHER: NICE 70-85°F SUNNY

0650 KS & TR @ BLD 3245 DECON EQ, RUN NA PAPERWORK

0920 KS & TR TO CRANE LAB DROP OFF SAMPLE 2 COOLERS

1005 TO FIRE STATION TO CHECK ON HOT WORK PERMIT FOR MGBG. TALK WITH LARRY WEBB 854-5607 ABOUT OUR NEEDS FOR PERMIT.

SEE LOG BOOK 1340

1500 KS & TR DEMOB EQ, SAMPLES, PAPER WORK ETC. DBG ROUND 1 COMPLETE

TUESDAY 7.31.01

KS & TR TRAVEL TO PGH

TITLE NSWC Crane
Dye Burial Grounds

PROJECT NO. 7141
BOOK 2494

Work continued from Page X Monday 7/23/01

~1200 KH, TR, KS Arrive on site
1851 KH, TR, KS Departed office

Please refer to K. Simpson's site logbook on #1330 for days activities

SCIENTIFIC BINDERY PRODUCTIONS CHICAGO 60605

Work continued to Page

SIGNATURE Keith W. [illegible] DATE 7/24/01

WITNESS DATE

TITLE NSWC Crane
Dye Burial Grounds

PROJECT NO. 7141
BOOK 2494

Work continued from Page X Tuesday 7/24/01

Weather: Hazy, hot (93°F), humid

0700 K. Horn, T. Rojahn, and K. Horn
K. Simpson Arrive on site and prepare supplies and paperwork for the day

~0740 A. Certain arrived on site (EFS)

0750 Calibrate PID Serial # ED HK 339
photovac 2020
→ bulb was cleaned and dried

0850 Set up on boring 025B04 w/ Geoprobe 54LT

0940 Completed boring 025B04 to 10'

Samples collected: ~~025B~~
025S040001
025S040002
025B042305

K. Simpson left ~~OBS~~

1045 Completed boring 025B05 to 8.8'

Samples collected: 025S050001
025S050002
025S050B09

SCIENTIFIC BINDERY PRODUCTIONS CHICAGO 60605

Work continued to Page

SIGNATURE Keith W. [illegible] DATE 7/24/01

WITNESS DATE

TITLE NSWC Crane Aye Burial Grounds

PROJECT NO. 7141

BOOK 2494

Work continued from Page 91

1120 Completed boring 025B08 to 10.5'

Samples collected: 025S080001
025S080002
025B080810

1130 K. Hehn, T. Rajahn, A. Certain left for lunch and pick up supplies at office

1300 Return to site

1330 Completed 025B09 to 10' bgs

Samples collected: 025S090001 @ 1345
025S090002 @ 1345
025B090709 @ 1335

1420 Completed 025B10 to 9.5'

Samples collected
025S100001 @ 1345
025S100002 @ 1345
025B100810 @ 1417

Work continued to Page

SIGNATURE Kenneth W. Hehn

DATE 7/24/01

WITNESS

DATE

TITLE NSWC Crane DBG

PROJECT NO. 7141

BOOK 2494

Work continued from Page 92

1450 Completed 025B07 to 8.0'

Samples collected to
025B070709 @ 1455

1535 Completed 025B11 to

Samples collected to:
025B110000 @ 1513
025B110002 @ 1513
Dup of both samples → FD072401 01 @ 1513
025B110406 @ 1529

1620 Completed 025B06 to 8.0' bgs

Sample(s) collected:
025B060709 @ 1621

1702 Completed 025B02 to 10' bgs

Sample collected
025B020810 @ 1658

1710 K. Hehn, T. Rajahn, A. Certain leave DBG for office

~1745 A. Certain left site for the day

1830 K. Hehn, T. Rajahn, K. Simpson leave site for the day

Work continued to Page

SIGNATURE Kenneth W. Hehn

DATE 7/24/01

WITNESS

DATE

TITLE NSWC Crane Dye Burial Grounds PROJECT NO. 7141 BOOK 3494

Work continued from Page

→ Wednesday July 25, 2001
Weather: Hazy, Hot (89°F), humid

0655 Arrive on site
K. Horn, K. Simpson, T. Rajala

0707 A. Certain arrives on site
0725 PID (ED HH 339) calibrated
0730 KH/TR/KS/AC leave office

0801 Start on boring 025B01

0849 Completed boring 025B01 to 11'

Samples collected:
025B010911 @ 0831
↓
- Duplicate: FD07250101
① metals (all)
② dyes
- MS/MSD
① metals
② dyes

SCIENTIFIC BINDERY PRODUCTIONS CHICAGO 60605

Work continued to Page

SIGNATURE Keith W. Horn DATE 7/25/01
WITNESS DATE

TITLE NSWC Crane Dye Burial Grounds PROJECT 7141 BOOK 3494

Work continued from Page

0920 Completed 025B03 to 10' bgs

Samples collected
025S030001
025S030002 > @ 0851
025B030709 @ 0907

1005 Completed 025B14 to 9.5

Samples collected
025B140709 @ 1002

1050 Completed 025B17 to 9.0

Samples collected:
025S170001 > @ 1022
025S170002
025B170608 @ 1034

1123 Completed 025B16 to 8.0'
025S160001 > @ 1101
025S160001
025B160507 @ 1117

SCIENTIFIC BINDERY PRODUCTIONS CHICAGO 60605

Work continued to Page

SIGNATURE Keith W. Horn DATE 7/25/01
WITNESS DATE

TITLE NSWC Crane Dye Burial Grounds

PROJECT NO. 7141

BOOK 2494

Work continued from Page

1127 KH, TR, AC depart DBG for office

~1200 KH, TR, AC, KS depart for lunch

lunch

1257 KH, TR, AC leave office for DBG

1316 Started on boring 02SB13

1325 Completed boring 02SB13
Samples:
02SB130507 @ 1329

1410 Completed boring 02SB12
Samples:
02SB120507 @ 1359

1421 Completed boring 02SB15
Samples:
02SS150001 > @ 1406
02SS150002
02SB150608 @ 1419

KH

Work continued to Page

SCIENTIFIC BINDERY PRODUCTIONS CHICAGO 60605

SIGNATURE Kristin N. [illegible]

DATE 7/25/01

WITNESS

DATE

TITLE NSWC Crane DBG

PROJECT NO. 7141

BOOK 2494

Work continued from Page

1510 Completed boring 02SB20 to 8.0'
Samples collected:
02SS200001 > @ 1445
02SS200002
02SB200608 @ 1506

1527 Completed boring 02SB19 to 6.0'
Samples Completed:
02SS190001 > @ 1516
02SS190002
02SB190406 @ 1527

1615 Completed boring 02SB18 to 6.9'
02SS180001 > @ 1540
02SS180002
02SB180507 @ 1607

1755 Arrived back at office Bldg 3245
K.H, TR, KS (already on site)
A.C.

Work continued to Page

SCIENTIFIC BINDERY PRODUCTIONS CHICAGO 60605

SIGNATURE Kristin N. [illegible]

DATE 7/25/01

WITNESS

DATE

TITLE NSWC CRANE DBG

PROJECT NO. 7141

BOOK 2494

Work continued from Page

1655 Rinsate of DPT cutting shoe performed by Terry Rejthan.

~1730 A. Certain left site

~1800 KH, TR, KS left site for FedEx

See sample logsheets, boring logs for add. details

KWH

SCIENTIFIC BINDERY PRODUCTIONS CHICAGO 60605

Work continued to Page

SIGNATURE Kevin W. Hanson

DATE 7/26/01

WITNESS

DATE

TITLE NSWC CRANE DBG

PROJECT NO. 7141

BOOK 2494

Work continued from Page

Thursday ~~March~~ July 26th, 2001

Weather: Overcast, light rain overnight totalling 0.3 inch rain), high temp today 89°F - humid

0655 KH, TR, KS Arrive on site (office) prep for groundwater, surface water and sediment sampling.

0705 KH calibrated photovac 2020 Serial # ED HK339

0800 KH/KS set up on well 026W0501 and began purging

TR worked w/ A. Certain to backfill borings and at general site cleanup

0935 KH/TR/KS began sampling 026W0501

1040 Completed sampling 026W0501

SCIENTIFIC BINDERY PRODUCTIONS CHICAGO 60605

Work continued to Page

SIGNATURE

DATE

WITNESS

DATE

TITLE NSWC Crane DB6

PROJECT NO. 7141

BOOK 2494

Work continued from Page

1050 KH/TR/KS depart site for office to perform follow-up NA field analys.

(see additional info on logsheets)

1125
~~1130~~ KH/KS complete nitrite test on well 026W0501
KH, TR, KS depart for lunch

1205 Return for lunch to office
- TR departs to set up on another well

- KH/KS ~~complete~~ begin NO_3-N testing on 026W0501 in office

- 1330 KH arrives on DB6; TR is already purging ~~sampling~~ 02-08-B1

↓ See Keith Simpson's log book #1330 for remaining ~~analys~~ details on the day

SCIENTIFIC BINDERY PRODUCTIONS CHICAGO 60605

Work continued to Page

SIGNATURE Keith W. [illegible]

DATE 7/20/01

WITNESS

DATE

TITLE NSWC Crane DB6

PROJECT NO. 7141

BOOK 2494

Work continued from Page

~~06~~ Friday July 27th, 2001
weather: M. sunny, mild, 84°F

0655 KH, TR, KS arrive on site office and prepare supplies for groundwater / surface water sediment sampling

0727
~~0836~~ KH/TR/KS leave office to set up groundwater sampling on well 02C11B3

0815 Set up complete; purging started

0950 Purging complete; sampling started

1059 Sampling / Field NA @ well completed

1115 Tear down LF equipment and move to a next to well

1141 After moving N_2 cylinder to 02-01, KH drives and arrives at office for NO_2 NO_3 analysis

SCIENTIFIC BINDERY PRODUCTIONS CHICAGO 60605

Work continued to Page

SIGNATURE Keith W. [illegible]

DATE 7/27/01

WITNESS

DATE

TITLE NSWC Crane DBG

PROJECT NO. 7141

BOOK 2494

Work continued from Page

1204 Completed NO_2 analysis on 02C11P3
NO_3 to be done after lunch (see
Depart for lunch KS book #132)

1230 Return to office - prep for afternoon

1450 Set up complete on 02-01-81 for
gas sampling

1600 Still purging - drawdown occurring
even below ~~75~~ ml/min
36 ml/min KH

1650 Begin sampling

1855 Completed sampling and ~~stor.~~
tore down sampling equipment

1900 Left site

1905 TR/KH arrive at office - unload

~ 1930 TR/KH left site

SCIENTIFIC BINDERY PRODUCTIONS CHICAGO 60605

Work continued to Page

SIGNATURE Keith W. [illegible]

DATE 7/28/01

WITNESS

DATE

TITLE NSWC Crane DBG

PROJECT NO. 7141

BOOK 2494

Work continued from Page

Saturday July 28th, 2001
Weather: 80°F hazy and overcast

0700 KH/TR/KS arrive at office

0735 Calibrated PID, Lamotte, YSI 650
(see calibration logs/sheets)

0810 Arrived at well 02C10P3
(aka 02-10CP3-88)

0838 Set up for low-flow purge
complete. ~~Ave~~ KH
Purging initiated.

1025 Started sampling @ 02C10P3
1340 TR/KS arrive at site from MGBG
1348 Completed sampling

Samples collected:
- 02GWC10P301
- FD072801 01 ← Duplicate of

@1025 hrs

SCIENTIFIC BINDERY PRODUCTIONS CHICAGO 60605

Work continued to Page

SIGNATURE Keith W. [illegible]

DATE

WITNESS

DATE

TITLE

PROJECT NO.

BOOK

Work continued from Page

1350 TR/KH/KS tear down monitoring/sampling equipment; move to 02-02-81

1430 TR/KH/KS set up on 02-02-81 complete purging initiated

1450 KH/KS depart to visit ABJ/Joop Trail and WGBG

1640 KH arrives back at DBG w/ TR at 02-02-81

1700 END PURGE @ 02-02-81
1705 START SAMPLING
1920 END SAMPLING
1930 FINISH CLEAN-UP @ 02-02-81
1943 ARRIVE @ FIELD OFFICE
2000 LEFT FIELD OFFICE

Td.

END

SCIENTIFIC BINDERY PRODUCTIONS CHICAGO 60605

Work continued to Page

SIGNATURE Keith W. [illegible] DATE 7/28/01

WITNESS [illegible] DATE 7/29/01

TITLE

PROJECT NO.

BOOK

Work continued from Page

SCIENTIFIC BINDERY PRODUCTIONS CHICAGO 60605

Work continued to Page

SIGNATURE DATE

WITNESS DATE

APPENDIX D

SURVEY DATA

SURVEY DATA

SWMU 2 - DYE BURIAL GROUNDS					
LOCATION	NORTHING NAD 27	EASTING NAD 27	GROUND ELEVATION (ft. msl)	REFERENCE POINT ELEVATION (a) (ft. msl)	TOP OF CASING ELEVATION (b) (ft. msl)
02-01*	491384.47830	596550.97300	743.07000	745.77000	746.33000
02-02	491143.00000	596074.00000	NA	727.67000	NA
02-03	491058.00000	595916.00000	NA	722.38000	NA
02-04	490919.00000	595915.00000	NA	719.02000	NA
02-05	491491.00000	596645.00000	NA	741.28000	NA
02-06*	491298.23670	596384.93780	742.16000	744.25000	745.16000
02-07*	491192.72730	596232.82850	735.15000	738.02000	738.74000
02-08*	491092.55290	596224.64860	729.66000	731.80000	732.80000
02C09	491331.00000	597056.00000	NA	740.36000	NA
02C09P2	491336.00000	597060.00000	NA	740.66000	NA
02C10	491789.00000	596142.00000	NA	716.47000	NA
02C10P2	491789.00000	596147.00000	NA	716.39000	NA
02C10P3	491784.00000	596142.00000	NA	716.36000	NA
02C11	490987.00000	595829.00000	NA	715.31000	NA
02C11P2	490987.00000	595823.00000	NA	715.36000	NA
02C11P3	490987.00000	595817.00000	NA	715.66000	NA
02C12	491496.00000	596670.00000	NA	741.57000	NA
02C12P2	491496.00000	596681.00000	NA	741.82000	NA
02C12P3	491496.00000	596676.00000	NA	741.83000	NA
02C13	491692.00000	596436.00000	NA	725.11000	NA
02C13P2	491695.00000	596439.00000	NA	724.78000	NA
02C13P3	491698.00000	596434.00000	NA	725.51000	NA
02C14	490671.00000	595964.00000	NA	716.40000	NA
02C14P2	490675.00000	595964.00000	NA	716.43000	NA
02C14P3	490665.00000	595964.00000	NA	716.26000	NA
02C15	491186.00000	595880.00000	NA	715.88000	NA
02C15P2	491181.00000	595880.00000	NA	715.77000	NA
02C16	490893.00000	596177.00000	NA	725.36000	NA
02C16P2	490899.00000	596177.00000	NA	725.18000	NA
02C17	491022.00000	596473.00000	NA	732.96000	NA
02C17P2	491027.00000	596473.00000	NA	732.84000	NA
02C17P3	491033.00000	596473.00000	NA	733.38000	NA
02C18	491103.00000	596611.00000	NA	737.31000	NA
02C18P2	491107.00000	596614.00000	NA	737.24000	NA
02C18P3	491112.00000	596618.00000	NA	737.45000	NA
02C19	491338.00000	596225.00000	NA	733.35000	NA
02C19P2	491332.00000	596225.00000	NA	733.28000	NA
02C19P3	491327.00000	596225.00000	NA	733.68000	NA
02C20	492114.00000	596769.00000	NA	715.06000	NA
02C20P2	492120.00000	596763.00000	NA	714.92000	NA
02C20P3	492120.00000	596769.00000	NA	714.78000	NA
02C21	491004.00000	597187.00000	NA	NA	NA
02C22	490129.00000	597610.00000	NA	742.99000	NA
02C22P2	490124.00000	597613.00000	NA	742.63000	NA
02C22P3	490119.00000	597617.00000	NA	742.50000	NA

SURVEY DATA

SWMU 2 - DYE BURIAL GROUNDS					
LOCATION	NORTHING NAD 27	EASTING NAD 27	GROUND ELEVATION (ft. msl)	REFERENCE POINT ELEVATION (a) (ft. msl)	TOP OF CASING ELEVATION (b) (ft. msl)
02SB01*	491481.24940	596419.27310	733.47000	NA	NA
02SB02*	491493.84770	596409.20610	733.97000	NA	NA
02SB03*	491502.12670	596450.14110	733.83000	NA	NA
02SB04*	491508.23930	596399.94890	732.04000	NA	NA
02SB05*	491461.54830	596388.48260	732.98000	NA	NA
02SB06*	491340.27920	596352.03310	735.16000	NA	NA
02SB07*	491329.26360	596343.24340	734.35000	NA	NA
02SB08*	491370.63480	596356.67700	734.81000	NA	NA
02SB09*	491352.72950	596336.07480	734.28000	NA	NA
02SB10*	491338.96380	596325.98460	733.88000	NA	NA
02SB11*	491313.70810	596329.16550	733.93000	NA	NA
02SB12*	491104.07710	596076.55030	725.86000	NA	NA
02SB13*	491094.40720	596059.05530	725.58000	NA	NA
02SB14*	491076.88870	596027.44430	724.83000	NA	NA
02SB15*	491107.09910	596098.58030	726.91000	NA	NA
02SB16*	491130.02170	596029.66350	723.93000	NA	NA
02SB17*	491121.24880	595998.29010	723.25000	NA	NA
02SB18*	491057.31770	595992.60910	724.27000	NA	NA
02SB19*	491051.23310	596033.03890	724.56000	NA	NA
02SB20*	491061.67440	596067.37770	725.76000	NA	NA
02SWSD01*	491627.77930	595994.48820	687.64000	NA	NA
02SWSD02*	491293.97620	595906.25700	696.52000	NA	NA
02SWSD03*	490945.70060	595679.32290	685.25000	NA	NA
02SWSD04*	490537.29510	596163.77040	654.19000	NA	NA
02SWSD05*	489998.39120	596551.51580	654.29000	NA	NA
02SWSD06*	491072.80700	596990.61140	739.82000	NA	NA
02SWSD07*	490019.83620	595268.45860	614.12000	NA	NA

(a) The reference point elevation was taken from well PVC riser.
(b) The top of casing elevation was taken from the protective steel casing.

* — Indicates the survey data was collected during the Fall of 2001 TtNUS investigation. The survey data for the remaining locations was collected during previous investigations that were not conducted by TtNUS. The vertical elevation data for the locations surveyed by TtNUS used the NAVD 88 datum. Pre-existing survey data from previous investigations are relative to the NGVD 29 datum.

NA — not applicable.

APPENDIX E

DATABASE

Table E.1-1	Summary of Analytical Results, SWMU 2 Surface Soil
Table E.1-2	Summary of Analytical Results, SWMU 2 Subsurface Soil
Table E.2-1	Summary of Analytical Results, SWMU 2 Ground Water
Table E.2-2	Summary of Analytical Results, SWMU 2 Background Ground Water
Table E.3	Summary of Analytical Results, SWMU 2 Surface Water
Table E.4	Summary of Analytical Results, SWMU 2 Sediment
Table E.5	Summary of Quality Control Results

TABLE E.1-1

SUMMARY OF ANALYTICAL RESULTS
SWMU 2 SURFACE SOIL
NSWC CRANE
CRANE, INDIANA

Location	02SB03	02SB03	02SB04	02SB04	02SB05	02SB05	02SB08	02SB08	02SB09	02SB10	02SB11	02SB11	02SB15	02SB15
Nsample	02SS030001	02SS030002	02SS040001	02SS040002	02SS050001	02SS050002	02SS080001	02SS080002	02SS090002	02SS100002	02SS110001	02SS110002	02SS150001	02SS150002
Sample	02SS030001	02SS030002	02SS040001	02SS040002	02SS050001	02SS050002	02SS080001	02SS080002	02SS090002	02SS100002	02SS110001	02SS110002	02SS150001	02SS150002
Matrix	SO	SO	SO	SO	SO	SO	SO	SO	SO	SO	SO	SO	SO	SO
Submatrix	SS	SS	SS	SS	SS	SS	SS	SS	SS	SS	SS	SS	SS	SS
Sacode	NORMAL	NORMAL	NORMAL	NORMAL	NORMAL	NORMAL	NORMAL	NORMAL	NORMAL	NORMAL	DUP	DUP	NORMAL	NORMAL
Depth Range	0 - 1	0 - 2	0 - 1	0 - 2	0 - 1	0 - 2	0 - 1	0 - 2	0 - 2	0 - 2	0 - 1	0 - 2	0 - 1	0 - 2
Status	NORMAL	NORMAL	NORMAL	NORMAL	NORMAL	NORMAL	NORMAL	NORMAL	NORMAL	NORMAL	NORMAL	NORMAL	NORMAL	NORMAL
Sample Date	7/25/2001	7/25/2001	7/24/2001	7/24/2001	7/24/2001	7/24/2001	7/24/2001	7/24/2001	7/24/2001	7/24/2001	7/24/2001	7/24/2001	7/25/2001	7/25/2001
Validated	Y	Y	Y	Y	Y	Y	Y	Y	Y	Y	Y	Y	Y	Y
Soil Group	3	3	3	3	3	3	3	3	3	3	3	3	3	3
Inorganics (MG/KG)														
ALUMINUM	8810		10300		10300		10300		9630	10100	10100		7750	
ANTIMONY	0.44 U		0.42 U		0.45		0.45		0.5	0.46	0.43 U		0.4 U	
ARSENIC	6.3		4.9 J		6.7 J		5 J		5.9 J	6 J	3.6 J		4.9	
BARIUM	68.8		77 J		70 J		68.7 J		131 J	138 J	63.1 J		61.5	
BERYLLIUM	2.2 U		2.1 U		2.3 U		2 U		0.79	0.85	2.1 U		2 U	
CADMIUM	0.44 U		0.43 U		0.45 U		0.4 U		0.43 J	0.45 U	0.42 U		0.4 U	
CALCIUM	7840		1280 J		13400 J		962 J		1720 J	1340 J	1210 J		13000	
CHROMIUM	13.6		16.1		13.3		13.8		9.9	10.5	18		11	
COBALT	7.9		7.8		8.6		5.6		13.2	13.2	6.7		6.1	
COPPER	9.2		9.9		10.7		10.2		8.9	8.5	10.7		8.9	
IRON	17700		21000		17900		17600		14000	14000	23500		14700	
LEAD	13.2		13.6 J		12.6 J		10.6 J		18.5 J	18 J	11.2 J		10.8	
MAGNESIUM	1320		1300		3310		1490		1210	1250	1380		3240	
MANGANESE	527		604		684		365		1400	1470	422		530	
MERCURY	0.03 J		0.03 J		0.03 J		0.03 J		0.04 J	0.04 J	0.03 J		0.02 J	
NICKEL	9.1		9.9		11.9		9.8		9.9	10.7	11.9		8.9	
POTASSIUM	561 J		606 J		724 J		695 J		695 J	663 J	606 J		547 J	
SELENIUM	0.44 U		0.43 U		0.45 U		0.4 U		0.65	0.7	0.42 U		0.4 U	
SILVER	0.44 U		0.43 U		0.45 U		0.4 U		0.43 U	0.45 U	0.42 U		0.4 U	
SODIUM	442 UJ		430 U		455 U		399 U		434 U	446 U	421 U		403 UJ	
THALLIUM	0.44 U		0.43 U		0.45 U		0.4 U		0.43 U	0.45 U	0.42 U		0.4 U	
TIN	2.2 U		2.1 U		2.2 U		2.1 U		2.2 U	2.1 U	2.2 U		2 U	
VANADIUM	24.2		25.9 J		22 J		21.4 J		18.6 J	19.7 J	23.9 J		21.3	
ZINC	27.7 J		31.3 J		33.9 J		32.3 J		40.9 J	41.4 J	33.4 J		24.8 J	
Dyes (MG/KG)														
1-AMINOANTHRAQUINONE		9.636 UJ		9.636 UJ		9.636 UR		9.636 UJ	9.636 UJ	9.636 UJ		9.636 UJ		9.636 UJ
2-AMINOANTHRAQUINONE		14.016 UJ		14.016 UJ		14.016 UR		14.016 UJ	14.016 UJ	14.016 UJ		14.016 UJ		14.016 UJ
ACID BLUE 45		13.95 UJ		13.95 UJ		13.95 UR		13.95 UJ	13.95 UJ	13.95 UJ		13.95 UJ		13.95 UJ
ACID BLUE 9		13.578 UJ		13.578 UJ		13.578 UR		13.578 UJ	13.578 UJ	13.578 UJ		13.578 UJ		13.578 UJ
ACID ORANGE 10		15.078 UJ		15.078 UJ		15.078 UR		15.078 UJ	15.078 UJ	15.078 UJ		15.078 UJ		15.078 UJ
ACID RED 64		37.5 UJ		37.5 UJ		37.5 UR		37.5 UJ	37.5 UJ	37.5 UJ		37.5 UJ		37.5 UJ
ACID YELLOW 23		15.078 UJ		15.078 UJ		15.078 UR		15.078 UJ	15.078 UJ	15.078 UJ		15.078 UJ		15.078 UJ
ACID YELLOW 73		13.578 UJ		13.578 UJ		13.578 UR		13.578 UJ	13.578 UJ	13.578 UJ		13.578 UJ		13.578 UJ
BASIC VIOLET 10		11.928 UJ		11.928 UJ		11.928 UR		11.928 UJ	11.928 UJ	11.928 UJ		11.928 UJ		11.928 UJ
BASIC YELLOW 2		13.878 UJ		13.878 UJ		13.878 UR		13.878 UJ	13.878 UJ	13.878 UJ		13.878 UJ		13.878 UJ
DISPERSE BLUE 14		11.214 UJ		11.214 UJ		11.214 UR		11.214 UJ	11.214 UJ	11.214 UJ		11.214 UJ		11.214 UJ
DISPERSE RED 9		9.906 UJ		9.906 UJ		9.906 UR		9.906 UJ	9.906 UJ	9.906 UJ		9.906 UJ		9.906 UJ
DISPERSE VIOLET 1		9.756 UJ		9.756 UJ		9.756 UR		9.756 UJ	9.756 UJ	9.756 UJ		9.756 UJ		9.756 UJ
P-(DIMETHYLAMINO)AZOBENZENE		11.97 UJ		11.97 UJ		11.97 UR		11.97 UJ	11.97 UJ	11.97 UJ		11.97 UJ		11.97 UJ
SOLVENT GREEN 3		11.028 UJ		11.028 UJ		11.028 UR		11.028 UJ	11.028 UJ	11.028 UJ		11.028 UJ		11.028 UJ
SOLVENT ORANGE 3		9.594 UJ		9.594 UJ		9.594 UR		9.594 UJ	9.594 UJ	9.594 UJ		9.594 UJ		9.594 UJ
SOLVENT ORANGE 7		10.8 UJ		10.8 UJ		10.8 UR		10.8 UJ	10.8 UJ	10.8 UJ		10.8 UJ		10.8 UJ
SOLVENT RED 1		17.394 UJ		17.394 UJ		17.394 UR		17.394 UJ	17.394 UJ	17.394 UJ		17.394 UJ		17.394 UJ
SOLVENT RED 24		4.26 UJ		4.26 UJ		4.26 UR		4.26 UJ	4.26 UJ	4.26 UJ		4.26 UJ		4.26 UJ
SOLVENT YELLOW 14		10.62 UJ		10.62 UJ		10.62 UR		10.62 UJ	10.62 UJ	10.62 UJ		10.62 UJ		10.62 UJ
SOLVENT YELLOW 3		11.328 UJ		11.328 UJ		11.328 UR		11.328 UR	11.328 UR	11.328 UR		11.328 UJ		11.328 UJ
SOLVENT YELLOW 33		10.488 UJ		10.488 UJ		10.488 UR		10.488 UJ	10.488 UJ	10.488 UJ		10.488 UJ		10.488 UJ

TABLE E.1-1

SUMMARY OF ANALYTICAL RESULTS
SWMU 2 SURFACE SOIL
NSWC CRANE
CRANE, INDIANA

Location	02SB16	02SB16	02SB17	02SB17	02SB18	02SB18	02SB19	02SB19	02SB20	02SB20
Nsample	02SS160001	02SS160002	02SS170001	02SS170002	02SS180001	02SS180002	02SS190001	02SS190002	02SS200001	02SS200002
Sample	02SS160001	02SS160002	02SS170001	02SS170002	02SS180001	02SS180002	02SS190001	02SS190002	02SS200001	02SS200002
Matrix	SO	SO	SO	SO	SO	SO	SO	SO	SO	SO
Submatrix	SS	SS	SS	SS	SS	SS	SS	SS	SS	SS
Sacode	NORMAL	NORMAL	NORMAL	NORMAL	DUP	DUP	NORMAL	NORMAL	DUP	DUP
Depth Range	0 - 1	0 - 2	0 - 1	0 - 2	0 - 1	0 - 2	0 - 1	0 - 2	0 - 1	0 - 2
Status	NORMAL	NORMAL	NORMAL	NORMAL	NORMAL	NORMAL	NORMAL	NORMAL	NORMAL	NORMAL
Sample Date	7/25/2001	7/25/2001	7/25/2001	7/25/2001	7/25/2001	7/25/2001	7/25/2001	7/25/2001	7/25/2001	7/25/2001
Validated	Y	Y	Y	Y	Y	Y	Y	Y	Y	Y
Soil Group	3	3	3	3	3	3	3	3	3	3
Inorganics (MG/KG)										
ALUMINUM	9550		8630		9160		12400		12500	
ANTIMONY	0.47 U		0.43 U		0.42 U		0.47 U		0.48 U	
ARSENIC	5.4		4.7		2.6		7.2 J		8.4 J	
BARIUM	209		178		55		131 J		71.3 J	
BERYLLIUM	2.3 U		2.1 U		2.1 U		0.56		0.49 U	
CADMIUM	0.62		0.48		0.42 U		0.52 J		0.49 U	
CALCIUM	1440		842		421 U		14600 J		15400 J	
CHROMIUM	10.5		10.4		12.2		40.8		14	
COBALT	19		15		3.9		9.9		5.7	
COPPER	8.7		8		8.7		10.9		11.8	
IRON	12200		11400		14400		17000		19800	
LEAD	20.2		17.5		9.3		184 J		13 J	
MAGNESIUM	1360		1230		1080		2030		2480	
MANGANESE	1800		1570		124		923		423	
MERCURY	0.05 J		0.04 J		0.02 UJ		0.05 J		0.05 J	
NICKEL	15		13.5		6.6		10.4		8.2	
POTASSIUM	697 J		587 J		421 U		892 J		881 J	
SELENIUM	0.67		0.52		0.42 U		0.59		0.53	
SILVER	0.47 U		0.43 U		0.42 U		0.44 U		0.49 U	
SODIUM	466 UJ		426 UJ		421 UJ		433 U		492 U	
THALLIUM	0.47 U		0.43 U		0.42 U		0.44 U		0.49 U	
TIN	2.3 U		2.1 U		2.1 U		2.3 U		2.4 U	
VANADIUM	21.6		20		22.3		21.8 J		22.8 J	
ZINC	45.6 J		41.1 J		15.9 J		50.2 J		40.4 J	
Dyes (MG/KG)										
1-AMINOANTHRAQUINONE		9.636 UJ		9.636 UJ		9.636 UJ		9.636 UJ		9.636 UJ
2-AMINOANTHRAQUINONE		14.016 UJ		14.016 UJ		14.016 UJ		14.016 UJ		14.016 UJ
ACID BLUE 45		13.95 UJ		13.95 UJ		13.95 UJ		13.95 UJ		13.95 UJ
ACID BLUE 9		13.578 UJ		13.578 UJ		13.578 UJ		13.578 UJ		13.578 UJ
ACID ORANGE 10		15.078 UJ		15.078 UJ		15.078 UJ		15.078 UJ		15.078 UJ
ACID RED 64		37.5 UJ		37.5 UJ		37.5 UJ		37.5 UJ		37.5 UJ
ACID YELLOW 23		15.078 UJ		15.078 UJ		15.078 UJ		15.078 UJ		15.078 UJ
ACID YELLOW 73		13.578 UJ		13.578 UJ		13.578 UJ		13.578 UJ		13.578 UJ
BASIC VIOLET 10		11.928 UJ		11.928 UJ		11.928 UJ		11.928 UJ		11.928 UJ
BASIC YELLOW 2		13.878 UJ		13.878 UJ		13.878 UJ		13.878 UJ		13.878 UJ
DISPERSE BLUE 14		11.214 UJ		11.214 UJ		11.214 UJ		11.214 UJ		11.214 UJ
DISPERSE RED 9		9.906 UJ		9.906 UJ		9.906 UJ		9.906 UJ		9.906 UJ
DISPERSE VIOLET 1		9.756 UJ		9.756 UJ		9.756 UJ		9.756 UJ		9.756 UJ
P-(DIMETHYLAMINO)AZOBENZENE		11.97 UJ		11.97 UJ		11.97 UJ		11.97 UJ		11.97 UJ
SOLVENT GREEN 3		11.028 UJ		11.028 UJ		11.028 UJ		11.028 UJ		11.028 UJ
SOLVENT ORANGE 3		9.594 UJ		9.594 UJ		9.594 UJ		9.594 UJ		9.594 UJ
SOLVENT ORANGE 7		10.8 UJ		10.8 UJ		10.8 UJ		10.8 UJ		10.8 UJ
SOLVENT RED 1		17.394 UJ		17.394 UJ		17.394 UJ		17.394 UJ		17.394 UJ
SOLVENT RED 24		4.26 UJ		4.26 UJ		4.26 UJ		4.26 UJ		4.26 UJ
SOLVENT YELLOW 14		10.62 UJ		10.62 UJ		10.62 UJ		10.62 UJ		10.62 UJ
SOLVENT YELLOW 3		11.328 UJ		11.328 UJ		11.328 UR		11.328 UR		11.328 UR
SOLVENT YELLOW 33		10.488 UJ		10.488 UJ		10.488 UJ		10.488 UJ		10.488 UJ

TABLE E.1-2

SUMMARY OF ANALYTICAL RESULTS
SWMU 2 SUBSURFACE SOIL
NSWC CRANE
CRANE, INDIANA

Location	02SB01	02SB02	02SB03	02SB04	02SB05	02SB06	02SB07	02SB08	02SB09	02SB10
Nsample	02SB010911	02SB020810	02SB030709	02SB040305	02SB050809	02SB060709	02SB070709	02SB080810	02SB090709	02SB100810
Sample	02SB010911	02SB020810	02SB030709	02SB040305	02SB050809	02SB060709	02SB070709	02SB080810	02SB090709	02SB100810
Matrix	SO	SO	SO	SO	SO	SO	SO	SO	SO	SO
Submatrix	SB	SB	SB	SB	SB	SB	SB	SB	SB	SB
Sacode	DUP	NORMAL	NORMAL	NORMAL	NORMAL	NORMAL	NORMAL	NORMAL	NORMAL	NORMAL
Depth Range	9 - 11	8 - 10	7.5 - 9.5	3 - 5	8 - 8.8	7 - 9	7 - 9	8 - 10	7 - 9	8 - 9.5
QC_Type	NM	NM	NM	NM	NM	NM	NM	NM	NM	NM
Status	NORMAL	NORMAL	NORMAL	NORMAL	NORMAL	NORMAL	NORMAL	NORMAL	NORMAL	NORMAL
Sample Date	7/25/2001	7/24/2001	7/25/2001	7/24/2001	7/24/2001	7/24/2001	7/24/2001	7/24/2001	7/24/2001	7/24/2001
Validated	Y	Y	Y	Y	Y	Y	Y	Y	Y	Y
Soil Group	9	9	9	8	9	9	9	9	9	9
Inorganics (MG/KG)										
ALUMINUM	1570	2300	1990	10900	1820	2910	1620	3400	3370	1800
ANTIMONY	0.4 U	0.41 U	0.4 U	0.93	0.41 U	0.43 U	0.39 U	0.39 U	0.41 U	0.42 U
ARSENIC	0.68	0.41	0.41	7.5 J	1.3 U	0.91	3.5 J	0.53 U	1.9 J	0.21 U
BARIUM	11.4	31.7	26.6	73.8 J	27.9 J	26.6	12.7 J	33 J	30.6 J	14.2 J
BERYLLIUM	2 U	2.1 U	2 U	2.2 U	0.42 U	2.2 U	0.39 U	2 U	0.41 U	0.42 U
CADMIUM	0.4 U	0.41 U	0.4 U	0.45 U	0.42 U	0.43 U	0.39 U	0.4 U	0.41 U	0.42 U
CALCIUM	396 U	414 U	403 U	1030 J	421 U	465	391 U	399 U	411 U	416 U
CHROMIUM	8.8	11.5	8.7	15.9	3.8	9.7	4.3	9.6	14.7	3.4
COBALT	15.4	5.2	10.4	8.4	0.42 U	2.2 U	0.59	17.7	2.3	0.74
COPPER	6.4	5.5	5.8	12.6	2	4.9	6.9	7.2	4.2	4.9
IRON	20700	21300	12100	22100	2300	8280	2760	15500	7840	714
LEAD	11.3	6.2	8.3	13.6 J	4.4 J	6.7	7.4 J	9 J	5.1 J	7.3 J
MAGNESIUM	396 U	414 U	403 U	1500	421 U	508	391 U	548	423	416 U
MANGANESE	226 J	70.3 J	100 J	798	1.9	4.1 J	3.5	99.6	172	2
MERCURY	0.02 UJ	0.02 UJ	0.02 UJ	0.03 J	0.02 UJ	0.02 UJ	0.02 UJ	0.02 UJ	0.02 UJ	0.02 UJ
NICKEL	17.5	7.7	13.9	10.7	1.1	2.8	1.7	25.3	2.9	1.7
POTASSIUM	396 U	414 U	403 U	630 J	421 U	435 U	391 U	458 J	411 U	497 U
SELENIUM	0.4 U	0.41 U	0.4 U	0.45 U	0.42 U	0.43 U	0.39 U	0.4 U	0.41 U	0.42 U
SILVER	0.4 U	0.41 U	0.4 U	0.45 U	0.42 U	0.43 U	0.39 U	0.4 U	0.41 U	0.42 U
SODIUM	396 UJ	414 UJ	403 UJ	446 U	421 U	435 UJ	391 U	399 U	411 U	416 U
THALLIUM	0.4 U	0.41 U	0.4 U	0.45 U	0.42 U	0.43 U	0.39 U	0.4 U	0.41 U	0.42 U
TIN	2 U	2.1 U	2 U	2.2 U	2 U	2.2 U	1.9 U	2 U	2 U	2.1 U
VANADIUM	12.9	14.7	10.5	27 J	5.9 U	8.9	7.3 U	13 J	9.1 J	5.1 U
ZINC	57.8 J	23.3 J	33.4 J	35.6 J	2.1 U	7.7 J	11.5 J	42 J	10.6 J	2.5 J
Dyes (MG/KG)										
1-AMINOANTHRAQUINONE	9.636 UJ	9.636 U	9.636 UJ	9.636 UJ	9.636 U	9.636 UJ	9.636 U	9.636 U	9.636 U	9.636 U
2-AMINOANTHRAQUINONE	14.016 UJ	14.016 U	14.016 UJ	14.016 UJ	14.016 U	14.016 UJ	14.016 U	14.016 U	14.016 U	14.016 U
ACID BLUE 45	13.95 UJ	13.95 U	13.95 UJ	13.95 UJ	13.95 U	13.95 UJ	13.95 U	13.95 U	13.95 U	13.95 U
ACID BLUE 9	13.578 UJ	13.578 U	13.578 UJ	13.578 UJ	13.578 U	13.578 UJ	13.578 U	13.578 U	13.578 U	13.578 U
ACID ORANGE 10	3.8484 J	15.078 U	15.078 UJ	15.078 UJ	15.078 U	15.078 UJ	15.078 U	15.078 U	15.078 U	15.078 U
ACID RED 64	37.5 UJ	37.5 U	37.5 UJ	37.5 UJ	37.5 U	37.5 UJ	37.5 U	37.5 U	37.5 U	37.5 U
ACID YELLOW 23	6.3881 J	11.1732	15.078 UJ	11.5059 J	15.078 U	15.078 UJ	2.8544	15.078 U	15.078 U	15.078 U
ACID YELLOW 73	13.578 UJ	13.578 U	13.578 UJ	13.578 UJ	13.578 U	13.578 UJ	13.578 U	13.578 U	13.578 U	13.578 U
BASIC VIOLET 10	11.928 UJ	11.928 U	11.928 UJ	11.928 UJ	11.928 U	11.928 UJ	11.928 U	11.928 U	11.928 U	11.928 U
BASIC YELLOW 2	13.878 UJ	13.878 U	13.878 UJ	13.878 UJ	13.878 U	13.878 UJ	13.878 U	13.878 U	13.878 U	13.878 U
DISPERSE BLUE 14	11.214 UJ	11.214 U	11.214 UJ	11.214 UJ	11.214 U	11.214 UJ	11.214 U	11.214 U	11.214 U	11.214 U
DISPERSE RED 9	9.906 UJ	9.906 U	9.906 UJ	9.906 UJ	9.906 U	9.906 UJ	9.906 U	9.906 U	9.906 U	9.906 U
DISPERSE VIOLET 1	9.756 UJ	9.756 U	9.756 UJ	9.756 UJ	9.756 U	9.756 UJ	9.756 U	9.756 U	9.756 U	9.756 U
P-(DIMETHYLAMINO)AZOBENZENE	11.97 UJ	11.97 U	11.97 UJ	11.97 UJ	11.97 U	11.97 UJ	11.97 U	11.97 U	11.97 U	11.97 U
SOLVENT GREEN 3	11.028 UJ	11.028 U	11.028 UJ	11.028 UJ	11.028 U	11.028 UJ	11.028 U	11.028 U	11.028 U	11.028 U
SOLVENT ORANGE 3	9.594 UJ	9.594 U	9.594 UJ	9.594 UJ	9.594 U	9.594 UJ	9.594 U	9.594 U	9.594 U	9.594 U
SOLVENT ORANGE 7	10.8 UJ	10.8 U	10.8 UJ	10.8 UJ	10.8 U	10.8 UJ	10.8 U	10.8 U	10.8 U	10.8 U
SOLVENT RED 1	17.394 UJ	17.394 U	17.394 UJ	17.394 UJ	17.394 U	17.394 UJ	17.394 U	17.394 U	17.394 U	17.394 U
SOLVENT RED 24	4.26 UJ	4.26 U	4.26 UJ	4.26 UJ	4.26 U	4.26 UJ	4.26 U	4.26 U	4.26 U	4.26 U

TABLE E.1-2

SUMMARY OF ANALYTICAL RESULTS
SWMU 2 SUBSURFACE SOIL
NSWC CRANE
CRANE, INDIANA

Location	02SB01	02SB02	02SB03	02SB04	02SB05	02SB06	02SB07	02SB08	02SB09	02SB10
Nsample	02SB010911	02SB020810	02SB030709	02SB040305	02SB050809	02SB060709	02SB070709	02SB080810	02SB090709	02SB100810
Sample	02SB010911	02SB020810	02SB030709	02SB040305	02SB050809	02SB060709	02SB070709	02SB080810	02SB090709	02SB100810
Matrix	SO	SO	SO	SO	SO	SO	SO	SO	SO	SO
Submatrix	SB	SB	SB	SB	SB	SB	SB	SB	SB	SB
Sacode	DUP	NORMAL	NORMAL	NORMAL	NORMAL	NORMAL	NORMAL	NORMAL	NORMAL	NORMAL
Depth Range	9 - 11	8 - 10	7.5 - 9.5	3 - 5	8 - 8.8	7 - 9	7 - 9	8 - 10	7 - 9	8 - 9.5
QC_Type	NM	NM	NM	NM	NM	NM	NM	NM	NM	NM
Status	NORMAL	NORMAL	NORMAL	NORMAL	NORMAL	NORMAL	NORMAL	NORMAL	NORMAL	NORMAL
Sample Date	7/25/2001	7/24/2001	7/25/2001	7/24/2001	7/24/2001	7/24/2001	7/24/2001	7/24/2001	7/24/2001	7/24/2001
Validated	Y	Y	Y	Y	Y	Y	Y	Y	Y	Y
Soil Group	9	9	9	8	9	9	9	9	9	9
SOLVENT YELLOW 14	10.62 UJ	10.62 U	10.62 UJ	10.62 UJ	10.62 U	10.62 UJ	10.62 U	10.62 U	10.62 U	10.62 U
SOLVENT YELLOW 3	11.328 UJ	11.328 UJ	11.328 UJ	11.328 UJ	11.328 U	11.328 UJ	11.328 U	11.328 UJ	11.328 U	11.328 U
SOLVENT YELLOW 33	10.488 UJ	10.488 U	10.488 UJ	10.488 UJ	10.488 U	10.488 UJ	10.488 U	10.488 U	10.488 U	10.488 U
Miscellaneous Parameter (MG/KG)										
TOTAL ORGANIC CARBON	1100	1900	1000			1500	1200			1000
Miscellaneous Parameter (MEQ/1)										
CATION EXCHANGE CAPACITY	2.3 J	6 J	4.8 J			6.1 J	3 J			3 J
Miscellaneous Parameter (S.U.)										
PH	5.7 J	5.5 J	5.3 J			5.4 J	5.6 J			5.9 J

TABLE E.1-2

SUMMARY OF ANALYTICAL RESULTS
SWMU 2 SUBSURFACE SOIL
NSWC CRANE
CRANE, INDIANA

Location	02SB11	02SB12	02SB13	02SB14	02SB15	02SB16	02SB17	02SB18	02SB19	02SB20
Nsample	02SB110406	02SB120507	02SB130507	02SB140709	02SB150608	02SB160507	02SB170608	02SB180507	02SB190406	02SB200608
Sample	02SB110406	02SB120507	02SB130507	02SB140709	02SB150608	02SB160507	02SB170608	02SB180507	02SB190406	02SB200608
Matrix	SO	SO	SO	SO	SO	SO	SO	SO	SO	SO
Submatrix	SB	SB	SB	SB	SB	SB	SB	SB	SB	SB
Sacode	NORMAL	NORMAL	NORMAL	NORMAL	NORMAL	NORMAL	NORMAL	NORMAL	NORMAL	NORMAL
Depth Range	4 - 6	5 - 7	5 - 7	7 - 9	6 - 8	5 - 7	6 - 8	5 - 6.8	4 - 6	6 - 8
QC_Type	NM	NM	NM	NM	NM	NM	NM	NM	NM	NM
Status	NORMAL	NORMAL	NORMAL	NORMAL	NORMAL	NORMAL	NORMAL	NORMAL	NORMAL	NORMAL
Sample Date	7/24/2001	7/25/2001	7/25/2001	7/25/2001	7/25/2001	7/25/2001	7/25/2001	7/25/2001	7/25/2001	7/25/2001
Validated	Y	Y	Y	Y	Y	Y	Y	Y	Y	Y
Soil Group	9	8	8	9	8	9	9	9	8	8
Inorganics (MG/KG)										
ALUMINUM	4920	11300	6730	1770	4080	6910	4530	6750	6250	8590
ANTIMONY	0.44 U	0.43 U	0.45 U	0.4 U	0.4 U	0.41 U	0.45 U	0.41 U	0.46 U	0.43 U
ARSENIC	2.5 J	1.7	1.8	0.43	0.4	1.3	1.3	1.5	2.4	1.6 U
BARIUM	23.1 J	70.3	52	12	20.4	43.5	48.9	30.5	42.8	27.5 J
BERYLLIUM	0.42 U	2.2 U	2.3 U	2 U	2 U	2.1 U	2.3 U	2.1 U	2.3 U	0.46 U
CADMIUM	0.42 U	0.43 U	0.45 U	0.4 U	0.4 U	0.41 U	0.45 U	0.41 U	0.46 U	0.46 U
CALCIUM	425 U	432 U	454 U	397 U	400 U	414 U	454 U	457	488	476 J
CHROMIUM	7.9	19.1	9.4	5.5	7.8	11	10.9	13.6	10.9	9.6
COBALT	1	3.8	2.3 U	2 U	2 U	2.1 U	2.3	4.4	2.3 U	2.1
COPPER	4	9.3	4.6	4.5	3.8	6.1	5.2	6.3	4.9	5.1
IRON	10100	24100	10600	3000	11100	10300	10100	14100	9600	18700
LEAD	5.1 J	10.3	7.4	7.5	5.1	6.2	9.4	9.5	7.7	6.7 J
MAGNESIUM	448	926	712	397 U	400 U	635	491	607	663	763
MANGANESE	6.9	30.4 J	12.1 J	5.9 J	6.8 J	16.6 J	10.7 J	16 J	5.4 J	25.1
MERCURY	0.02 UJ	0.02 UJ	0.02 UJ	0.02 UJ	0.02 UJ	0.02 UJ	0.02 UJ	0.02 UJ	0.02 UJ	0.02 UJ
NICKEL	2.2	7.8	4.5	3.3	2.5	3.6	5.4	6.6	4.7	4.4
POTASSIUM	425 U	432	454	397	400	414 U	454 U	413 U	457 U	462 U
SELENIUM	0.42 U	0.43 U	0.45 U	0.4 U	0.4 U	0.41 U	0.45 U	0.41 U	0.46 U	0.46 U
SILVER	0.42 U	0.43 U	0.45 U	0.4 U	0.4 U	0.41 U	0.45 U	0.41 U	0.46 U	0.46 U
SODIUM	425 U	432 UJ	454 UJ	397 UJ	400 UJ	414 UJ	454 UJ	413 UJ	457 UJ	462 U
THALLIUM	0.42 U	0.43 U	0.45 U	0.4 U	0.4 U	0.41 U	0.45 U	0.41 U	0.46 U	0.46 U
TIN	2.2 U	2.2 U	2.3 U	2 U	2 U	2.1 U	2.3 U	2.1 U	2.3 U	2.1 U
VANADIUM	12.8 J	28.5	18	6.6	11.8	17.1	17.7	22.2	17.3	15.5 J
ZINC	6.6 J	20.5 J	7.3 J	8.3 J	5 J	16.2 J	15.1 J	17.6 J	7.2 J	12.3 J
Dyes (MG/KG)										
1-AMINOANTHRAQUINONE	9.636 UJ	9.636 UJ	9.636 UJ	9.636 U	9.636 UJ	9.636 U	9.636 U	9.636 UJ	9.636 UJ	9.636 UJ
2-AMINOANTHRAQUINONE	14.016 UJ	14.016 UJ	14.016 UJ	14.016 U	14.016 UJ	14.016 U	14.016 U	14.016 UJ	14.016 UJ	14.016 UJ
ACID BLUE 45	13.95 UJ	13.95 UJ	13.95 UJ	13.95 UJ	13.95 UJ	13.95 UJ	13.95 UJ	13.95 UJ	13.95 UJ	13.95 UJ
ACID BLUE 9	13.578 UJ	13.578 UJ	13.578 UJ	13.578 U	13.578 UJ	13.578 U	13.578 U	13.578 UJ	13.578 UJ	13.578 UJ
ACID ORANGE 10	15.078 UJ	15.078 UJ	15.078 UJ	15.078 U	15.078 UJ	15.078 U	15.078 U	15.078 UJ	15.078 UJ	15.078 UJ
ACID RED 64	37.5 UJ	37.5 UJ	37.5 UJ	37.5 U	37.5 UJ	37.5 U	37.5 U	37.5 UJ	37.5 UJ	37.5 UJ
ACID YELLOW 23	15.078 UJ	5.0558 J	15.078 UJ	15.078 U	5.4501 J	15.078 U	15.078 U	15.078 UJ	15.078 UJ	15.078 UJ
ACID YELLOW 73	13.578 UJ	13.578 UJ	13.578 UJ	13.578 U	13.578 UJ	13.578 U	13.578 U	13.578 UJ	13.578 UJ	13.578 UJ
BASIC VIOLET 10	11.928 UJ	11.928 UJ	11.928 UJ	11.928 U	11.928 UJ	11.928 U	11.928 U	11.928 UJ	11.928 UJ	11.928 UJ
BASIC YELLOW 2	13.878 UJ	13.878 UJ	13.878 UJ	13.878 U	13.878 UJ	13.878 U	13.878 U	13.878 UJ	13.878 UJ	13.878 UJ
DISPERSE BLUE 14	11.214 UJ	11.214 UJ	11.214 UJ	11.214 U	11.214 UJ	11.214 U	11.214 U	11.214 UJ	11.214 UJ	11.214 UJ
DISPERSE RED 9	9.906 UJ	9.906 UJ	9.906 UJ	9.906 U	9.906 UJ	9.906 U	9.906 U	9.906 UJ	9.906 UJ	9.906 UJ
DISPERSE VIOLET 1	9.756 UJ	9.756 UJ	9.756 UJ	9.756 U	9.756 UJ	9.756 U	9.756 U	9.756 UJ	9.756 UJ	9.756 UJ
P-(DIMETHYLAMINO)AZOBENZENE	11.97 UJ	11.97 UJ	11.97 UJ	11.97 U	11.97 UJ	11.97 U	11.97 U	11.97 UJ	11.97 UJ	11.97 UJ
SOLVENT GREEN 3	11.028 UJ	11.028 UJ	11.028 UJ	11.028 U	11.028 UJ	11.028 U	11.028 U	11.028 UJ	11.028 UJ	11.028 UJ
SOLVENT ORANGE 3	9.594 UJ	9.594 UJ	9.594 UJ	9.594 U	9.594 UJ	9.594 U	9.594 U	9.594 UJ	9.594 UJ	9.594 UJ
SOLVENT ORANGE 7	10.8 UJ	10.8 UJ	10.8 UJ	10.8 U	10.8 UJ	10.8 U	10.8 U	10.8 UJ	10.8 UJ	10.8 UJ
SOLVENT RED 1	17.394 UJ	17.394 UJ	17.394 UJ	17.394 U	17.394 UJ	17.394 U	17.394 U	17.394 UJ	17.394 UJ	17.394 UJ
SOLVENT RED 24	4.26 UJ	4.26 UJ	4.26 UJ	4.26 U	4.26 UJ	4.26 U	4.26 U	4.26 UJ	4.26 UJ	4.26 UJ

TABLE E.1-2

SUMMARY OF ANALYTICAL RESULTS
SWMU 2 SUBSURFACE SOIL
NSWC CRANE
CRANE, INDIANA

Location	02SB11	02SB12	02SB13	02SB14	02SB15	02SB16	02SB17	02SB18	02SB19	02SB20
Nsample	02SB110406	02SB120507	02SB130507	02SB140709	02SB150608	02SB160507	02SB170608	02SB180507	02SB190406	02SB200608
Sample	02SB110406	02SB120507	02SB130507	02SB140709	02SB150608	02SB160507	02SB170608	02SB180507	02SB190406	02SB200608
Matrix	SO	SO	SO	SO	SO	SO	SO	SO	SO	SO
Submatrix	SB	SB	SB	SB	SB	SB	SB	SB	SB	SB
Sacode	NORMAL	NORMAL	NORMAL	NORMAL	NORMAL	NORMAL	NORMAL	NORMAL	NORMAL	NORMAL
Depth Range	4 - 6	5 - 7	5 - 7	7 - 9	6 - 8	5 - 7	6 - 8	5 - 6.8	4 - 6	6 - 8
QC_Type	NM	NM	NM	NM	NM	NM	NM	NM	NM	NM
Status	NORMAL	NORMAL	NORMAL	NORMAL	NORMAL	NORMAL	NORMAL	NORMAL	NORMAL	NORMAL
Sample Date	7/24/2001	7/25/2001	7/25/2001	7/25/2001	7/25/2001	7/25/2001	7/25/2001	7/25/2001	7/25/2001	7/25/2001
Validated	Y	Y	Y	Y	Y	Y	Y	Y	Y	Y
Soil Group	9	8	8	9	8	9	9	9	8	8
SOLVENT YELLOW 14	10.62 UJ	10.62 UJ	10.62 UJ	10.62 U	10.62 UJ	10.62 U	10.62 U	10.62 UJ	10.62 UJ	10.62 UJ
SOLVENT YELLOW 3	11.328 UJ	11.328 UJ	11.328 UJ	11.328 U	11.328 UJ	11.328 U	11.328 U	11.328 UR	11.328 UR	11.328 UR
SOLVENT YELLOW 33	10.488 UJ	10.488 UJ	10.488 UJ	10.488 U	10.488 UJ	10.488 U	10.488 U	10.488 UJ	10.488 UJ	10.488 UJ
Miscellaneous Parameter (MG/KG)										
TOTAL ORGANIC CARBON		1800	1300	1200	1200					
Miscellaneous Parameter (MEQ/1)										
CATION EXCHANGE CAPACITY		19 J	13 J	3.7 J	6.9 J					
Miscellaneous Parameter (S.U.)										
PH		4.9 J	5.1 J	6.3 J	5.3 J					

TABLE E.2-1

SUMMARY OF ANALYTICAL RESULTS
SWMU 2 GROUND WATER
NSWC CRANE
CRANE, INDIANA

Location	02-01	02-02	02-07	02-08	02C11P3	02C12P3
Nsample	02GW0101	02GW0201	02GW0701	02GW0801	02GWC11P301	02GWC12P301
Sample	02GW0101	02GW0201	02GW0701	02GW0801	02GWC11P301	02GWC12P301
Aquifer	UP	LP	LP	LP	LP	UP
Matrix	GW	GW	GW	GW	GW	GW
Sacode	NORMAL	NORMAL	NORMAL	NORMAL	NORMAL	NORMAL
QC_Type	NM	NM	NM	NM	NM	NM
Status	NORMAL	NORMAL	NORMAL	NORMAL	NORMAL	NORMAL
Sample Date	7/27/2001	7/28/2001	7/29/2001	7/26/2001	7/27/2001	7/25/2001
Validated	Y	Y	Y	Y	Y	Y
Inorganics (UG/L)						
ALUMINUM	200 U	200 U	200 U	200 U	23300	200 U
ANTIMONY	1 U	1 U	1 U	1 U	1 U	1 U
ARSENIC	1.2	0.85	1.6	0.9	1.4	0.63
BARIUM	13.6	38.8	19.3	17	9	10.6
BERYLLIUM	1 U	1 U	1 U	1 U	4.7	1 U
CADMIUM	1 U	1 U	1 U	1.3	16.1	1.3
CALCIUM	142000	295000	412000	360000	131000	166000
CHROMIUM	5 U	5 U	5 U	5 U	5 U	5 U
COBALT	3 U	6.4	3 U	3 U	445	6.5
COPPER	2 U	2 U	2 U	2 U	21.5	2 U
IRON	465 J	1420 J	778 J	684 J	3350 J	440 J
LEAD	1 U	1 U	1 U	1 U	4.8	1 U
MAGNESIUM	83100	78700	152000	129000	55600	121000
MANGANESE	35	1410	25.3	689	1720	440
MERCURY	0.2 U	0.2 U	0.2 U	0.2 U	0.2 U	0.2 U
NICKEL	10 U	67.1	28	56.6	868	16
POTASSIUM	5000 U	5000 U	5000 U	5050	5000 U	9360
SELENIUM	15.7 J	2.4 J	11.4 J	4 J	5.1 J	3.6 J
SILVER	3 U	3 U	3 U	3 U	3 U	3 U
SODIUM	213000	33600	70200	61100	53600	141000
THALLIUM	1 U	1 U	1 U	1 U	1 U	1 U
TIN	10 UJ	10 UJ	10 UJ	10 UJ	10 UJ	10 UJ
VANADIUM	2 U	2 U	2 U	2 U	2 U	2 U
ZINC	10.9 J	24 J	10.5 J	76.7 J	2280 J	53 J
Dyes (MG/L)						
1-AMINOANTHRAQUINONE	0.0161 U	0.0161 U	0.0161 U	0.0161 U	0.0161 U	0.0161 U
2-AMINOANTHRAQUINONE	0.0234 U	0.0234 U	0.0234 U	0.0234 U	0.0234 U	0.0234 U
ACID BLUE 45	0.0233 U	0.0233 U	0.0233 U	0.0233 U	0.0233 U	0.0233 U
ACID BLUE 9	0.0226 U	0.0226 U	0.0226 U	0.0226 U	0.0226 U	0.0226 U
ACID ORANGE 10	0.0251 U	0.0251 U	0.0251 U	0.0251 U	0.0251 U	0.0251 U
ACID RED 64	0.0625 U	0.0625 U	0.0625 U	0.0625 U	0.0625 U	0.0625 U
ACID YELLOW 23	0.0251 U	0.0251 U	0.0251 U	0.0251 U	0.0251 U	0.0251 U
ACID YELLOW 73	0.0226 U	0.0226 U	0.0226 U	0.0226 U	0.0226 U	0.0226 U
BASIC VIOLET 10	0.0199 U	0.0199 U	0.0199 U	0.0199 U	0.0199 U	0.0199 U
BASIC YELLOW 2	0.0231 U	0.0231 U	0.0231 U	0.0231 U	0.0231 U	0.0231 U
DISPERSE BLUE 14	0.0187 U	0.0187 U	0.0187 U	0.0187 U	0.0187 U	0.0187 U
DISPERSE RED 9	0.0165 U	0.0165 U	0.0165 U	0.0165 U	0.0165 U	0.0165 U
DISPERSE VIOLET 1	0.0163 U	0.0163 U	0.0163 U	0.0163 U	0.0163 U	0.0163 U
P-(DIMETHYLAMINO)AZOBENZENE	0.02 U	0.02 U	0.02 U	0.02 U	0.02 U	0.02 U
SOLVENT GREEN 3	0.0184 U	0.0184 U	0.0184 UJ	0.0184 U	0.0184 U	0.0184 U
SOLVENT ORANGE 3	0.016 U	0.016 U	0.016 U	0.016 U	0.016 U	0.016 U
SOLVENT ORANGE 7	0.018 U	0.018 U	0.018 U	0.018 U	0.018 U	0.018 U
SOLVENT RED 1	0.029 U	0.029 U	0.029 U	0.029 U	0.029 U	0.029 U
SOLVENT RED 24	0.0071 U	0.0071 U	0.0071 U	0.0071 U	0.0071 U	0.0071 U
SOLVENT YELLOW 14	0.0177 U	0.0177 U	0.0177 U	0.0177 U	0.0177 U	0.0177 U
SOLVENT YELLOW 3	0.0189 U	0.0189 U	0.0189 U	0.0189 U	0.0189 U	0.0189 U
SOLVENT YELLOW 33	0.0175 U	0.0175 U	0.0175 U	0.0175 U	0.0175 U	0.0175 U
Miscellaneous Parameters (MG/L)						
CHLORIDE	150	25	170	96	47	100
SULFATE	740	890	1300	1100	830	970
TOTAL ORGANIC CARBON	3.2	1.3	1.8	2.2	1 U	5
TOTAL SUSPENDED SOLIDS	7 J	2 UJ	2 UJ	2 UJ	4 J	3 J
Field Parameters (PPMV)						
ALKALINITY	175	275	260	500	10 U	65
CARBON DIOXIDE	114	50	125	250	380	225
DISSOLVED OXYGEN	3.5	2	4	2.5	1	2
Field Parameters (MG/L)						

TABLE E.2-1

SUMMARY OF ANALYTICAL RESULTS
SWMU 2 GROUND WATER
NSWC CRANE
CRANE, INDIANA

Location	02-01	02-02	02-07	02-08	02C11P3	02C12P3
Nsample	02GW0101	02GW0201	02GW0701	02GW0801	02GWC11P301	02GWC12P301
Sample	02GW0101	02GW0201	02GW0701	02GW0801	02GWC11P301	02GWC12P301
Aquifer	UP	LP	LP	LP	LP	UP
Matrix	GW	GW	GW	GW	GW	GW
Sacode	NORMAL	NORMAL	NORMAL	NORMAL	NORMAL	NORMAL
QC_Type	NM	NM	NM	NM	NM	NM
Status	NORMAL	NORMAL	NORMAL	NORMAL	NORMAL	NORMAL
Sample Date	7/27/2001	7/28/2001	7/29/2001	7/26/2001	7/27/2001	7/25/2001
Validated	Y	Y	Y	Y	Y	Y
DIVALENT IRON	0	0.71	0.08	0	1.05	0.05
HYDROGEN SULFIDE	0	0	0	0	0	0
NITRATE	0.69	0.1	0.08	0.01	0.01	1.08
NITRITE	0	0	0.003	0.006	0.005	0
SULFIDE	0.02	0.01	0.02	0.05	0	0.01
Field Parameters						
OXIDATION REDUCTION POTENTIAL (MV)	584	502	661	481	476.3	483
PH (S.U.)	5.9	6.23	5.22	6.12	3.68	5.61
SPECIFIC CONDUCTANCE (MS/CM)	2.029	1.905	2.798	2.573	1.559	12.353
TEMPERATURE (C)	20.99	22	25.55	17.41	15.26	18.4
TURBIDITY (NTU)	10	2	1.6	1.8	2.1	4.6

TABLE E.2-2

SUMMARY OF ANALYTICAL RESULTS
SWMU 2 BACKGROUND GROUND WATER
NSWC CRANE
CRANE, INDIANA

Location	02-05	02C10P3
Nsample	02GW0501	02GWC10P301
Sample	02GW0501	02GWC10P301
Aquifer	LP	LP
Matrix	GW	GW
Sacode	NORMAL	DUP
QC_Type	NM	NM
Status	NORMAL	NORMAL
Sample Date	7/26/2001	7/28/2001
Validated	Y	Y
Inorganics (UG/L)		
ALUMINUM	200 U	200 U
ANTIMONY	1 U	1 U
ARSENIC	0.81	0.2 U
BARIUM	23.2	13.4
BERYLLIUM	1 U	1 U
CADMIUM	1 U	1 U
CALCIUM	501000	11900
CHROMIUM	5 U	5 U
COBALT	8.7	3.8
COPPER	2.1	2 U
IRON	2110 J	1810 J
LEAD	1 U	1 U
MAGNESIUM	181000	10400
MANGANESE	3790	554
MERCURY	0.2 U	0.2 U
NICKEL	26.9	10 U
POTASSIUM	8100	5000 U
SELENIUM	2.9 J	1 UJ
SILVER	3 U	3 U
SODIUM	52600	23800
THALLIUM	1 U	1 U
TIN	10 UJ	10 UJ
VANADIUM	2 U	2 U
ZINC	21.2 J	26 J
Dyes (MG/L)		
1-AMINOANTHRAQUINONE	0.0161 U	0.0161 U
2-AMINOANTHRAQUINONE	0.0234 U	0.0234 U
ACID BLUE 45	0.0233 U	0.0233 U
ACID BLUE 9	0.0226 U	0.0226 U
ACID ORANGE 10	0.0251 U	0.0251 U
ACID RED 64	0.0625 U	0.0625 U
ACID YELLOW 23	0.0251 U	0.0251 U
ACID YELLOW 73	0.0226 U	0.0226 U
BASIC VIOLET 10	0.0199 U	0.0199 U
BASIC YELLOW 2	0.0231 U	0.0231 U
DISPERSE BLUE 14	0.0187 U	0.0187 U
DISPERSE RED 9	0.0165 U	0.0165 U
DISPERSE VIOLET 1	0.0163 U	0.0163 U
P-(DIMETHYLAMINO)AZOBENZENE	0.02 U	0.02 U
SOLVENT GREEN 3	0.0184 U	0.0184 U
SOLVENT ORANGE 3	0.016 U	0.016 U
SOLVENT ORANGE 7	0.018 U	0.018 U
SOLVENT RED 1	0.029 U	0.029 U
SOLVENT RED 24	0.0071 U	0.0071 U
SOLVENT YELLOW 14	0.0177 U	0.0177 U
SOLVENT YELLOW 3	0.0189 U	0.0189 U
SOLVENT YELLOW 33	0.0175 U	0.0175 U
Miscellaneous Parameters (MG/L)		
CHLORIDE	75	8
SULFATE	1900	50
TOTAL ORGANIC CARBON	1.5	1.4

TABLE E.2-2

SUMMARY OF ANALYTICAL RESULTS
SWMU 2 BACKGROUND GROUND WATER
NSWC CRANE
CRANE, INDIANA

Location	**02-05**	**02C10P3**
Nsample	**02GW0501**	**02GWC10P301**
Sample	**02GW0501**	**02GWC10P301**
Aquifer	**LP**	**LP**
Matrix	**GW**	**GW**
Sacode	**NORMAL**	**DUP**
QC_Type	**NM**	**NM**
Status	**NORMAL**	**NORMAL**
Sample Date	**7/26/2001**	**7/28/2001**
TOTAL SUSPENDED SOLIDS	5 J	2 UJ
Field Parameters (PPMV)		
ALKALINITY	350	70
CARBON DIOXIDE	275	152
DISSOLVED OXYGEN	0.7	0.6
Field Parameters (MG/L)		
DIVALENT IRON	1.09	1.7
HYDROGEN SULFIDE	0	0
NITRATE	0.01	0
NITRITE	0.002	0.001
SULFIDE	0.03	0.01
Field Parameters		
OXIDATION REDUCTION POTENTIAL (MV)	341.6	412
PH (S.U.)	6.11	5.5
SPECIFIC CONDUCTANCE (MS/CM)	3.285	0.278
TEMPERATURE (C)	18.15	15.76
TURBIDITY (NTU)	6.6	10

TABLE E.3

SUMMARY OF ANALYTICAL RESULTS
SWMU 2 SURFACE WATER
NSWC CRANE
CRANE, INDIANA

Location	02SWSD07	02SWSD07
Nsample	02SW0701	02SW0701-F
Sample	02SW0701	02SW0701-F
Matrix	SW	SW
Sacode	DUP	DUP
QC_Type	NM	NM
Status	NORMAL	NORMAL
Sample Date	7/29/2001	7/29/2001
Validated	Y	Y
Total Metals (UG/L)		
ALUMINUM	523	
ANTIMONY	1 U	
ARSENIC	0.41	
BARIUM	78	
BERYLLIUM	1 U	
CADMIUM	1 U	
CALCIUM	49700	
CHROMIUM	5 U	
COBALT	3 U	
COPPER	2 U	
IRON	874 J	
LEAD	1 U	
MAGNESIUM	11700	
MANGANESE	43.4	
MERCURY	0.2 U	
NICKEL	10 U	
POTASSIUM	5000 U	
SELENIUM	1 UJ	
SILVER	3 U	
SODIUM	11500	
THALLIUM	1 U	
TIN	10 UJ	
VANADIUM	2 U	
ZINC	10 UJ	
Dissolved Metals (UG/L)		
ALUMINUM		200 U
ANTIMONY		1 U
ARSENIC		0.2 U
BARIUM		74.1
BERYLLIUM		1 U
CADMIUM		1 U
CALCIUM		51500
CHROMIUM		5 U
COBALT		3 U
COPPER		2 U
IRON		140 J
LEAD		1 U
MAGNESIUM		12400
MANGANESE		15 U
MERCURY		0.2 U
NICKEL		10 U
POTASSIUM		5000 U
SELENIUM		1 UJ
SILVER		3 U
SODIUM		12200
THALLIUM		1 U
TIN		10 UJ
VANADIUM		2 U
ZINC		10 UJ
Dyes (MG/L)		
1-AMINOANTHRAQUINONE	0.0161 U	
2-AMINOANTHRAQUINONE	0.0234 U	

TABLE E.3

SUMMARY OF ANALYTICAL RESULTS
SWMU 2 SURFACE WATER
NSWC CRANE
CRANE, INDIANA

Location	02SWSD07	02SWSD07
Nsample	02SW0701	02SW0701-F
Sample	02SW0701	02SW0701-F
Matrix	SW	SW
Sacode	DUP	DUP
QC_Type	NM	NM
Status	NORMAL	NORMAL
Sample Date	7/29/2001	7/29/2001
Validated	Y	Y
ACID BLUE 45	0.0233 U	
ACID BLUE 9	0.0226 U	
ACID ORANGE 10	0.0251 U	
ACID RED 64	0.0625 U	
ACID YELLOW 23	0.0251 U	
ACID YELLOW 73	0.0226 U	
BASIC VIOLET 10	0.0199 U	
BASIC YELLOW 2	0.0231 U	
DISPERSE BLUE 14	0.0187 U	
DISPERSE RED 9	0.0165 U	
DISPERSE VIOLET 1	0.0163 U	
P-(DIMETHYLAMINO)AZOBENZENE	0.02 U	
SOLVENT GREEN 3	0.0184 U	
SOLVENT ORANGE 3	0.016 U	
SOLVENT ORANGE 7	0.018 U	
SOLVENT RED 1	0.029 U	
SOLVENT RED 24	0.0071 U	
SOLVENT YELLOW 14	0.0177 U	
SOLVENT YELLOW 3	0.0189 U	
SOLVENT YELLOW 33	0.0175 U	
Miscellaneous Parameters (MG/L)		
HARDNESS	170	
TOTAL ORGANIC CARBON	3.7	
TOTAL SUSPENDED SOLIDS	13 J	

TABLE E.4

SUMMARY OF ANALYTICAL RESULTS
SWMU 2 SEDIMENT
NSWC CRANE
CRANE, INDIANA

Location	02SWSD01	02SWSD02	02SWSD03	02SWSD04	02SWSD05	02SWSD06	02SWSD07
Nsample	02SD010006	02SD020006	02SD030006	02SD040006	02SD050006	02SD060006	02SD070006
Sample	02SD010006	02SD020006	02SD030006	02SD040006	02SD050006	02SD060006	02SD070006
Matrix	SD	SD	SD	SD	SD	SD	SD
Sacode	NORMAL	DUP	NORMAL	NORMAL	NORMAL	NORMAL	NORMAL
QC_Type	NM	NM	NM	NM	NM	NM	NM
Status	NORMAL	NORMAL	NORMAL	NORMAL	NORMAL	NORMAL	NORMAL
Sample Date	7/27/2001	7/27/2001	7/27/2001	7/27/2001	7/27/2001	7/27/2001	7/29/2001
Validated	Y	Y	Y	Y	Y	Y	Y
Inorganics (MG/KG)							
ALUMINUM	10300	9170	7870	6370	8140	8000	4580
ANTIMONY	0.74	0.52 U	0.74	0.69 U	0.48 U	0.48 U	0.53 U
ARSENIC	11 J	6.1	9 J	8.4	9	6	5.6
BARIUM	165	143	87.6	169	134	131	128
BERYLLIUM	1.2	2.6 U	0.54	3.4 U	2.3 U	2.4 U	2.7 U
CADMIUM	0.56	0.52 U	0.46 U	0.69	0.55	0.48 U	0.68
CALCIUM	1390	973	1310	1710	873	1440	2550
CHROMIUM	24.6	16	22.2	23.4	30.1	12	11.3
COBALT	25.4	21.8	8.4	21.2	29.5	17.4	12.6
COPPER	8.9	9.3	8.9	8.4	9.1	9.3	9.6
IRON	36400	15400	26100	30700	38700	14200	17900
LEAD	33.4	30.1	21.3	17.6	26.7	18.9	30.4
MAGNESIUM	1040	1120	952	900	760	998	960
MANGANESE	3200	2160	762	631	2410	2240	1470
MERCURY	0.05	0.06 J	0.04	0.05 J	0.05 J	0.05 J	0.03 UJ
NICKEL	13.6	17.7	7.9	41.8	21	12.6	20
POTASSIUM	571	559	561	688 U	460 U	511	830
SELENIUM	0.57	0.65 J	0.46 U	0.69 UJ	0.46 UJ	0.5 J	0.53 UJ
SILVER	0.54 U	0.52 U	0.46 U	0.69 U	0.46 U	0.48 U	0.53 U
SODIUM	545 U	524 UJ	462 U	688 UJ	460 UJ	484 UJ	533 UJ
THALLIUM	0.54 U	0.52 U	0.46 U	0.69 U	0.46 U	0.48 U	0.53 U
TIN	2.6 U	2.6 U	2.5 U	3.3 U	2.4 U	2.4 U	2.7 U
VANADIUM	31.7 J	24.4	28.1 J	31.3	37.7	22.4	14.9
ZINC	46.2 J	35.9	30 J	39	44.2	35.6	47.1
Dyes (MG/KG)							
1-AMINOANTHRAQUINONE	9.636 UR	9.636 UJ	9.636 U	9.636 U	9.636 UR	9.636 UJ	9.636 U
2-AMINOANTHRAQUINONE	14.016 UR	14.016 UJ	14.016 U	14.016 U	14.016 UR	14.016 UJ	14.016 U
ACID BLUE 45	13.95 UR	13.95 UJ	13.95 U	13.95 U	13.95 UR	13.95 UJ	13.95 U
ACID BLUE 9	13.578 UR	13.578 UJ	13.578 U	13.578 U	13.578 UR	13.578 UJ	13.78 U
ACID ORANGE 10	15.078 UR	15.078 UJ	15.078 U	15.078 U	15.078 UR	15.078 UJ	15.078 U
ACID RED 64	37.5 UR	37.5 UJ	37.5 U	37.5 U	37.5 UR	37.5 UJ	37.5 U
ACID YELLOW 23	15.078 UR	15.078 UJ	15.078 U	15.078 U	15.078 UR	15.078 UJ	15.078 U
ACID YELLOW 73	13.578 UR	13.578 UJ	13.578 U	13.578 U	13.578 UR	13.578 UJ	13.578 U
BASIC VIOLET 10	11.928 UR	11.928 UJ	11.928 U	11.928 U	11.928 UR	11.928 UJ	11.928 U
BASIC YELLOW 2	13.878 UR	13.878 UJ	13.878 U	13.878 U	13.878 UR	13.878 UJ	13.878 U
DISPERSE BLUE 14	11.214 UR	11.214 UJ	11.214 U	11.214 U	11.214 UR	11.214 UJ	11.214 U
DISPERSE RED 9	9.906 UR	9.906 UJ	9.906 U	9.906 U	9.906 UR	9.906 UJ	9.906 U
DISPERSE VIOLET 1	9.756 UR	9.756 UJ	9.756 U	9.756 U	9.756 UR	9.756 UJ	9.756 U
P-(DIMETHYLAMINO)AZOBENZENE	11.97 UR	11.97 UJ	11.97 U	11.97 U	11.97 UR	11.97 UJ	11.97 U
SOLVENT GREEN 3	11.028 UR	11.028 UJ	11.028 U	11.028 U	11.028 UR	11.028 UJ	11.028 U
SOLVENT ORANGE 3	9.594 UR	9.594 UJ	9.594 U	9.594 U	9.594 UR	9.594 UJ	9.594 U
SOLVENT ORANGE 7	10.8 UR	10.8 UJ	10.8 U	10.8 U	10.8 UR	10.8 UJ	10.8 U
SOLVENT RED 1	17.394 UR	17.394 UJ	17.394 U	17.394 U	17.394 UR	17.394 UJ	17.394 U
SOLVENT RED 24	4.26 UR	4.26 UJ	4.26 U	4.26 U	4.26 UR	4.26 UJ	4.26 U
SOLVENT YELLOW 14	10.62 UR	10.62 UJ	10.62 U	10.62 U	10.62 UR	10.62 UJ	10.62 U
SOLVENT YELLOW 3	11.328 UR	11.328 UR	11.328 UR	11.328 UR	11.328 UR	11.328 UR	11.325 UR
SOLVENT YELLOW 33	10.488 UR	10.488 UJ	10.488 U	10.488 U	10.488 UR	10.488 UJ	10.488 U

TABLE E.5

SUMMARY OF QUALITY CONTROL RESULTS
SWMU 2 SEDIMENT
NSWC CRANE
CRANE, INDIANA

Location	02SB01	02SWSD02	02SB11	02SB11	02SB18	02SB20	02SB20
Nsample	02SB010911-D	02SD020006-D	02SS110001-D	02SS110002-D	02SS180001-D	02SS200001-D	02SS200002-D
Sample	FD07250101	FD07270101	FD07240101	FD07240101	FD07250103	FD07250102	FD07250102
Matrix	SB	SD	SS	SS	SS	SS	SS
Sacode	DUP	DUP	DUP	DUP	DUP	DUP	DUP
QC_Type	NM	NM	NM	NM	NM	NM	NM
Status	NORMAL	NORMAL	NORMAL	NORMAL	NORMAL	NORMAL	NORMAL
Sample Date	07/25/01 12:0	07/27/01 12:0	07/24/01 12:0	07/24/01 12:0	07/25/01 12:0	07/25/01 12:0	07/25/01 12:0
Validated	Y	Y	Y	Y	Y	Y	Y
Inorganics (MG/KG)							
ALUMINUM	1410	9200	9980		8720	13100	
ANTIMONY	0.40 U	0.49 U	0.60		0.43 U	0.47 U	
ARSENIC	0.49	7.4	5.6 J		4.0	9.2 J	
BARIUM	9.3	142	75.6 J		50.2	78.6 J	
BERYLLIUM	2.0 U	2.5 U	0.42		2.2 U	0.49 U	
CADMIUM	0.40 U	0.57	0.41 U		0.43 U	0.49 U	
CALCIUM	402 U	1040	1080 J		431 U	7650 J	
CHROMIUM	9.1	16.8	11.6		13.7	13.3	
COBALT	10.8	21.0	5.5		3.0	7.5	
COPPER	5.5	9.7	10.3		8.8	12.3	
IRON	14700	17200	17600		17700	23000	
LEAD	8.2	28.7	11.1 J		13.5	14.0 J	
MAGNESIUM	402 U	1110	1480		996	2180	
MANGANESE	114	2090	475		131	567	
MERCURY	0.02 UJ	0.06 J	0.02 J		0.02 UJ	0.05 J	
NICKEL	14.0	18.3	8.3		5.9	8.4	
POTASSIUM	402 U	547	693 J		431 UJ	775 J	
SELENIUM	0.40 U	0.72 J	0.41 U		0.43 U	0.49	
SILVER	0.40 U	0.49 U	0.41 U		0.44	0.49 U	
SODIUM	402 UJ	495 UJ	411 U		431 UJ	489 U	
THALLIUM	0.40 U	0.49 U	0.41 U		0.43 U	0.49 U	
TIN	2.0 U	2.5 U	2.1 U		2.2 U	2.4 U	
VANADIUM	9.7	25.5	18.6 J		28.3	23.7 J	
ZINC	47.0 J	37.8	33.2 J		15.4 J	41.6 J	
Dyes (MG/KG)							
1-AMINOANTHRAQUINONE	9.636 U	9.636 UR		9.636 UJ	9.636 UJ		9.636 U
2-AMINOANTHRAQUINONE	14.016 U	14.016 UR		14.016 UJ	14.016 UJ		14.016 U
ACID BLUE 45	13.95 U	13.95 UR		13.95 UJ	13.95 UJ		13.95 U
ACID BLUE 9	13.578 U	13.578 UR		13.578 UJ	13.578 UJ		13.578 UJ
ACID ORANGE 10	4.2071	15.078 UR		15.078 UJ	15.078 UJ		15.078 U
ACID RED 64	37.5 U	37.5 UR		37.5 UJ	37.5 UJ		37.5 U
ACID YELLOW 23	6.9561	15.078 UR		15.078 UJ	15.078 UJ		15.078 U
ACID YELLOW 73	13.578 U	13.578 UR		13.578 UJ	13.578 UJ		13.578 U
BASIC VIOLET 10	11.928 U	11.928 UR		11.928 UJ	11.928 UJ		11.928 U
BASIC YELLOW 2	13.878 U	13.878 UR		13.878 UJ	13.878 UJ		13.878 U
DISPERSE BLUE 14	11.214 U	11.214 UR		11.214 UJ	11.214 UJ		11.214 U
DISPERSE RED 9	9.906 U	9.906 UR		9.906 UJ	9.906 UJ		9.906 U
DISPERSE VIOLET 1	9.756 U	9.756 UR		9.756 UJ	9.756 UJ		9.756 U
P-(DIMETHYLAMINO)AZOBENZENE	11.97 U	11.97 UR		11.97 UJ	11.97 UJ		11.97 U
SOLVENT GREEN 3	11.028 U	11.028 UR		11.028 UJ	11.028 UJ		11.028 U
SOLVENT ORANGE 3	9.594 U	9.594 UR		9.594 UJ	9.594 UJ		9.594 U
SOLVENT ORANGE 7	10.8 U	10.8 UR		10.8 UJ	10.8 UJ		10.8 U
SOLVENT RED 1	17.394 U	17.394 UR		17.394 UJ	17.394 UJ		17.394 U
SOLVENT RED 24	4.26 U	4.26 UR		4.26 UJ	4.26 UJ		4.26 U
SOLVENT YELLOW 14	10.62 U	10.62 UR		10.62 UJ	10.62 UJ		10.62 U
SOLVENT YELLOW 3	11.328 U	11.328 UR		11.328 UJ	11.328 UJ		11.328 UR
SOLVENT YELLOW 33	10.488 U	10.488 UR		10.488 UJ	10.488 UJ		10.488 U

TABLE E.5

SUMMARY OF QUALITY CONTROL RESULTS
SWMU 2 SEDIMENT
NSWC CRANE
CRANE, INDIANA

Location	02C10P3	02SWSD07	02SWSD07	QA/QC	QA/QC	QA/QC	QA/QC	QA/QC
Nsample	02GWC10P301-D	02SW0701-D	02SW0701-F-D	RB07240101	RB07250101	RB07250102	RB07270101	RB07290101
Sample	FD07280101	FD07290101	FD07290101-F	RB07240101	RB07250101	RB07250102	RB07270101	RB07290101
Matrix	GW	GW	GW	QC	QC	QC	QC	QC
Sacode	DUP	DUP	DUP	NORMAL	NORMAL	NORMAL	NORMAL	NORMAL
QC_Type	NM	NM	NM	RB	RB	RB	RB	RB
Status	NORMAL	NORMAL	NORMAL	NORMAL	NORMAL	NORMAL	NORMAL	NORMAL
Sample Date	07/28/01 12:0	07/29/01 12:0	07/29/01 12:0	07/24/01 12:0	07/25/01 12:0	07/25/01 12:0	07/27/01 12:0	07/29/01 12:0
Validated	Y	Y	Y	Y	Y	Y	Y	Y
Total Metals (UG/L)								
ALUMINUM	200 U	467	200 U	200 U	200 U	200 U	200 U	200 U
ANTIMONY	1.0 U	1.0 U	1.0 U	1.0 U	1.0 U	1.0 U	1.0 U	1.0 U
ARSENIC	0.2 U	0.39	0.2	0.2 U	0.2 U	0.2 U	0.2 U	0.2 U
BARIUM	13.2	75.8	74.1	1.0 U	1.1	1.4	1.0 U	1.0 U
BERYLLIUM	1.0 U	1.0 U	1.0 U	1.0 U	1.0 U	1.0 U	1.0 U	1.0 U
CADMIUM	1.0 U	1.0 U	1.0 U	1.0 U	1.1	1.3	1.0 U	1.0 U
CALCIUM	12500	49000	51300	5000 U	5000 U	5000 U	5000 U	5000 U
CHROMIUM	5.0 U	5.0 U	5.0 U	5.0 U	5.0 U	5.0 U	5.0 U	5.0 U
COBALT	3.8	3.0 U	3.0 U	3.0 U	3.0 U	3.0 U	3.0 U	3.0 U
COPPER	2.0 U	2.0 U	2.0 U	2.0 U	2.0 U	2.0 U	2.0 U	2.0 U
IRON	1840 J	778 J	126 J	100 UJ	100 UJ	100 UJ	100 UJ	100 UJ
LEAD	1.0 U	1.0 U	1.0 U	1.0 U	1.0 U	1.0 U	1.0 U	1.0 U
MAGNESIUM	10400	11700	12400	5000 U	5000 U	5000 U	5000 U	5000 U
MANGANESE	578	35.1	15 U	15.0 U	15.0 U	15.0 U	15.0 U	15.0 U
MERCURY	0.2 U	0.2 U	0.2 U	0.2 U	0.2 U	0.2 U	0.2 U	0.2 U
NICKEL	10.0 U	10.0 U	10.0 U	10.0 U	10.0 U	10.0 U	10.0 U	10.0 U
POTASSIUM	5000 U	5000 U	5000 U	5000 U	5000 U	5000 U	5000 U	5000 U
SELENIUM	1.0 UJ	1.0 UJ	1.0 UJ	1.0 UJ	1.0 UJ	1.0 UJ	1.0 UJ	1.0 UJ
SILVER	3.0 U	3.0 U	3.0 U	3.0 U	3.0 U	3.0 U	3.0 U	3.0 U
SODIUM	24200	11300	12100	5000 U	5000 U	5000 U	5000 U	5000 U
THALLIUM	1.0 U	1.0 U	1.0 U	1.0 U	1.0 U	1.0 U	1.0 U	1.0 U
TIN	10.0 UJ	10.0 UJ	10.0 UJ	10.0 UJ	10.0 UJ	10.0 UJ	10.0 UJ	10.0 UJ
VANADIUM	2.0 U	2.0 U	2.0 U	2.0 U	2.0 U	2.0 U	2.0 U	2.0 U
ZINC	26.1 J	10.0 UJ	10.0 UJ	10.0 UJ	10.0 UJ	10.0 UJ	10.0 UJ	10.0 UJ
Dyes (MG/L)								
1-AMINOANTHRAQUINONE	0.0161 U	0.0161 U		0.0161 U	0.0161 U	0.0161 U	0.0161 UJ	0.0161 U
2-AMINOANTHRAQUINONE	0.0234 U	0.0234 U		0.0234 U	0.0234 U	0.0234 U	0.0234 UJ	0.0234 U
ACID BLUE 45	0.0233 U	0.0233 U		0.0233 U	0.0233 U	0.0233 U	0.0233 UJ	0.0233 U
ACID BLUE 9	0.0226 U	0.0226 U		0.0226 U	0.0226 U	0.0226 U	0.0226 UJ	0.0226 U
ACID ORANGE 10	0.0251 U	0.0251 U		0.0251 U	0.0251 U	0.0251 U	0.0251 UJ	0.0251 U
ACID RED 64	0.0625 U	0.0625 U		0.0625 U	0.0625 U	0.0625 U	0.0625 UJ	0.0625 U
ACID YELLOW 23	0.0251 U	0.0251 U		0.0251 U	0.0251 U	0.0251 U	0.0251 UJ	0.0251 U
ACID YELLOW 73	0.0226 U	0.0226 U		0.0226 U	0.0226 U	0.0226 U	0.0226 UJ	0.0226 U
BASIC VIOLET 10	0.0199 U	0.0199 U		0.0199 U	0.0199 U	0.0199 U	0.0199 UJ	0.0199 U
BASIC YELLOW 2	0.0231 U	0.0231 U		0.0231 U	0.0231 U	0.0231 U	0.0231 UJ	0.0231 U
DISPERSE BLUE 14	0.0187 U	0.0187 U		0.0187 U	0.0187 U	0.0187 U	0.0187 UJ	0.0187 U
DISPERSE RED 9	0.0165 U	0.0165 U		0.0165 U	0.0165 U	0.0165 U	0.0165 UJ	0.0165 U
DISPERSE VIOLET 1	0.0163 U	0.0163 U		0.0163 U	0.0163 U	0.0163 U	0.0163 UJ	0.0163 U
P-(DIMETHYLAMINO)AZOBENZENE	0.02 U	0.02 U		0.02 U	0.02 U	0.02 U	0.02 UJ	0.02 U
SOLVENT GREEN 3	0.0184 U	0.0184 U		0.0184 U	0.0184 U	0.0184 U	0.0184 UJ	0.0184 U
SOLVENT ORANGE 3	0.016 U	0.016 U		0.016 U	0.016 U	0.016 U	0.016 UJ	0.016 U
SOLVENT ORANGE 7	0.018 U	0.018 U		0.018 U	0.018 U	0.018 U	0.018 UJ	0.018 U
SOLVENT RED 1	0.029 U	0.029 U		0.029 U	0.029 U	0.029 U	0.029 UJ	0.029 U
SOLVENT RED 24	0.0071 U	0.0071 U		0.0071 U	0.0071 U	0.0071 U	0.0071 UJ	0.0071 U
SOLVENT YELLOW 14	0.0177 U	0.0177 U		0.0177 U	0.0177 U	0.0177 U	0.0177 UJ	0.0177 U
SOLVENT YELLOW 3	0.0189 U	0.0189 U		0.0189 U	0.0189 U	0.0189 U	0.0189 UJ	0.0189 U
SOLVENT YELLOW 33	0.0175 U	0.0175 U		0.0175 U	0.0175 U	0.0175 U	0.0175 UJ	0.0175 U

APPENDIX F

STATISTICAL METHODOLOGY

F.1 SOIL

F.2 GROUND WATER

F.3 SURFACE WATER

F.4 SEDIMENT

APPENDIX F.1

APPENDIX F.1

SOIL

Soil samples from SWMU 2 underwent statistical comparisons to Crane Basewide background data sets as described in the Crane Basewide Soil Background Study (TtNUS, January 2001). Samples were evaluated for three specific physical characteristics to determine their appropriate soil grouping. These characteristics are (1) depositional environment (DE), (2) soil grain size, and (3) depth.

The parent material, or the origin of the soil and the manner in which it was deposited largely determines the chemical and mineralogical composition of that soil. The mechanism (e.g., water, wind, glaciers, weathering) from which the soil was formed is referred to herein as the depositional environment (DE) of the soil. Because the soil in each DE is derived from various types of parent material the resulting chemical composition is believed to vary significantly between the soil in each DE. NSWC Crane has been subdivided into four DE classifications: (1) alluvium (stream derived sediments); (2) loess (wind-blown sediment)/glacial outwash (glacially derived sediments); (3) residual soil derived from Pennsylvanian bedrock/colluvium; and (4) residual soils derived from Mississippian bedrock/colluvium. Within each DE, surface soil and subsurface soil were targeted, because the surface soils chemical composition is believed to differ significantly from subsurface soils chemical composition. This physical classification is believed to affect the chemical composition of soil because the parent material of the surface soil is believed, at least in part, to differ from the parent material from the subsurface material. It is also believed that the soil grain size (e.g., clay, silt, and sand) also significantly affects the concentration of inorganics in soil, providing another potential discriminating factor that is not necessarily well correlated to depth. Therefore, grouping of soil grain sizes into gross grain size classifications (e.g., clay, silt, and sand) was necessary to test this expectation.

Depending on these physical characteristics the samples were compared to one of the nine Crane basewide background data sets. The Analysis of Variance or the ANOVA technique is generally the basic approach used to compare data from background and site locations. The ANOVA technique is used to test whether there is statistically significant evidence of contamination associated with site activities.

There are two types of ANOVA: parametric and non-parametric. Parametric ANOVA methods make two important assumptions: 1) the data residuals are normally (or lognormally) distributed, and 2) the group variances are homogeneous. If these assumptions are not met the parametric ANOVA is a less powerful

test than the non-parametric ANOVA. Checking these assumptions requires a good deal of statistical effort (Shapiro-Wilk W Test and Levene's Test of Homogeneous Variance) and typically the assumptions are not met for a majority of the data sets. The parametric ANOVA is only marginally more powerful than the non-parametric ANOVA even when these assumptions are met. For these reasons a non-parametric ANOVA technique was chosen to be employed to compare site and background concentrations.

The Wilcoxon Rank-Sum test (EPA, 1992) (also known as the Mann-Whitney U test) was employed as the non-parametric ANOVA technique. The following equations present a step-by-step procedure for conducting the Wilcoxon Rank-Sum test.

The null hypothesis (H_0) that is tested is:

H_O The site concentration IS NOT statistically higher than the background concentration.

The alternate hypothesis (H_A) is:

H_A The site concentration IS statistically higher than the background concentration.

If H_O is rejected, then H_A is accepted. If H_0 is not rejected, the data set is consistent with the H_0 hypothesis.

- Step 1. Combine the background and site data and rank the ordered values from 1 to *N*. Assume there are *n* site samples and m background samples so that $N = m + n$.

- Step 2. Compute the Wilcoxon statistic *W*:

$$W = \sum_{i=1}^{n} E_i - \frac{1}{2} n(n+1)$$

where E_i are the ranks of the site samples (Large values of the statistic *W* give evidence of contamination in site locations).

- Step 3. Compute an approximate *Z-score*. To find the critical value of *W*, a normal approximation to its distribution is used. The expected value and standard deviation of *W* under the null hypothesis (i.e., no contamination exists) are given by the formulas:

$$E(W) = \frac{1}{2}mn; \qquad SD(W) = \sqrt{\frac{1}{12}mn(N+1)}$$

An approximate *Z-score* for the Wilcoxon Rank-Sum test may be calculated by the following equations:

$$Z = \frac{W - E(W) - \frac{1}{2}}{SD(W)}$$

The factor of 1/2 in the numerator serves as a continuity correction because the discrete distribution of the statistic W is being approximated by the continuous normal distribution. If n or $m > 10$ and ties are present, an adjustment to the approximate *Z-score* must be made:

$$Z_{ADJUSTED} = \frac{W - E(W) - \frac{1}{2}}{S'D(W)}$$

where: $$SD'(W) = \left(\frac{mn}{12} \left[N + 1 - \frac{\sum_{j=1}^{g} t_j (t_j^2 - 1)}{N(N-1)} \right] \right)^{\frac{1}{2}}$$

g = the number of tied groups and t_j is the number of tied data in the jth group.

- Step 4. For a one-tailed 95% confidence level test for H_0 versus the, reject H_0 and accept H_A if $Z_{ADJUSTED} > Z_{0.95} = +1.645$, which corresponds to a p-value of 0.05.

APPENDIX F.2

APPENDIX F.2

GROUND WATER

Wells from the most recent sampling effort were scrutinized for relationship of the wells to the ground water flow direction using potentiometric surface contour maps. Two were chosen as upgradient wells for SWMU 2. The upgradient wells are:

02-05
02C10P3

These upgradient wells were used for comparison to both the upper and lower Pennsylvanian aquifer.

Since there were not enough samples in the ground water comparisons (2 downgradient and 2 upgradient samples for upper Pennsylvanian; 4 downgradient and 2 upgradient samples for lower Pennsylvanian) to allow for 95% confidence and 75% power an alternate method was used to determine the critical Z-score used for the Wilcoxon Rank-Sum tests.

The number of combinations of orderings of n downgradient and m upgradient measurements is determined by:

$$C_{n,m} = \frac{(n+m)!}{n! \times m!}$$

where n = number of downgradient measurements
m = number of upgradient measurements
! = Factorial, of a positive number, the product of all the whole numbers (integers) from 1 through the number itself. Thus $6! = 1 \times 2 \times 3 \times 4 \times 5 \times 6 = 720$. Factorial zero, 0!, is defined as 1.

Z-scores were determined for each of these combinations, ordered from smallest to largest, and the 95th percentile Z-score was set as the critical value. For example, in the upper Pennsylvanian situation, with two upgradient and two downgradient measurements there are:

$$4! / (2! \times 2!) = 24 / 4 = 6$$

six combinations of orderings. These combinations of orderings are:

	Combination	Z-score
1.	DDUU	-1.549
2.	DUDU	-0.775
3.	DUUD	0.000
4.	UDDU	0.000
5.	UDUD	+0.775
6.	UUDD	+1.549

where D = downgradient and U = upgradient are ranked lowest to highest going left to right.

The 95% percentile Z-score for these six combinations is +1.549 which is used as the critical Z-score for the test. This Z-score corresponds to combination 6 above (UUDD) where the lowest downgradient concentration is greater than the highest upgradient concentration. If the typical critical Z-score of +1.645 were used, even this worst-case would not have triggered rejection of the null hypothesis.

For the lower Pennsylvanian situation, where 4 downgradient measurements were compared to 2 upgradient measurements, 15 combinations of orderings are possible with the 95% percentile Z-score corresponding to UUDDD where the lowest downgradient concentration is greater than the highest upgradient concentration.

APPENDIX F.3

APPENDIX F.3

SURFACE WATER

Three locations from SWMU 3 (Little Sulfur Creek) were chosen as background locations for SWMU 2. The background locations for surface water are:

03SW01
03SW02
03SW03

There was only one surface water sample (a seep) and therefore one downgradient concentration for each parameter. Therefore, no rigorous statistical comparison between the site background and downgradient concentrations could be performed. Instead, each downgradient concentration was compared to the maximum background concentration. If the downgradient concentration was greater than the maximum background concentration, the alternate hypothesis that the site concentration is statistically higher than the background concentration was accepted. If the downgradient concentration was less than or equal to the maximum background concentration, the null hypothesis that the site concentration is not statistically higher than the background concentration was accepted.

APPENDIX F.4

APPENDIX F.4

SEDIMENT

Four locations (03SD01, 03SD02, 03SD03, and 03SD04) from SWMU 3 (Little Sulfur Creek) were chosen as background locations for SWMU 2.

Wilcoxon Rank-Sum tests were used to compare the 4 background samples to the 7 site samples. These four sample locations were chosen because of their proximity to SWMU 2 and the area has not been disturbed by human activity. The four locations are upstream from SWMU 2.

APPENDIX G

HEALTH RISK ASSESSMENT CALCULATIONS

G.1 Sample Calculations

G.2 Toxicological Profiles

G.3 Rags - Part D Tables

APPENDIX G.1

SAMPLE CALCULATIONS

CLIENT: NSWC CRANE, INDIANA		JOB NUMBER: 7141
SUBJECT: CALCULATION OF INTAKE/RISK FROM INCIDENTAL INGESTION OF SOIL CONSTRUCTION WORKER		
BASED ON: USEPA, DEC. 1989		
BY: R. JUPIN	CHECKED BY:	DATE: 02/26/02

PURPOSE: To estimate intake, carcinogenic and noncarcinogenic risks from incidental ingestion of surface soil/subsurface soil at SWMU 2.

EQUATION:

$$IEX = \frac{Cs \times IR \times EF \times ED \times FI \times CF}{BW \times AT}$$

Where:

IEX	=	estimated exposure intake (mg/kg/day)
Cs	=	exposure point concentration in soil/sediment (mg/kg)
IR	=	incidental soil ingestion rate (mg/day)
EF	=	exposure frequency (days/year)
ED	=	exposure duration (years)
FI	=	fraction ingested from contaminated source (unitless)
CF	=	conversion factor (1.0E-6 kg/mg)
BW	=	body weight (kg)
AT	=	averaging time (days)
CSFo	=	oral carcinogenic slope factor ($(mg/kg/day)^{-1}$)
RfDo	=	oral noncarcinogenic reference dose (mg/kg/day)

RISKS:

ICLR (Carcinogens) = Intake (mg/kg/day) x CSFo $(mg/kg/day)^{-1}$

HQ (Noncarcinogens) = Intake (mg/kg/day) / RFDo (mg/kg/day)

ASSUMPTIONS:

Cs	=	2.91	mg/kg	Arsenic
IR	=	480	mg/day	
EF	=	10	days/year	
ED	=	1	years	
FI	=	1		
CF	=	1.0E-06	kg/mg	
BW	=	70	kg	
ATc	=	25550	days	
ATnc	=	365	days	
CSFo	=	1.5E+00	$(mg/kg/day)^{-1}$	
RfDo	=	3.0E-04	(mg/kg/day)	

CLIENT: NSWC CRANE, INDIANA		JOB NUMBER: 7141
SUBJECT: CALCULATION OF INTAKE/RISK FROM INCIDENTAL INGESTION OF SOIL CONSTRUCTION WORKER		
BASED ON: USEPA, DEC. 1989		
BY: R. JUPIN	CHECKED BY:	DATE: 02/26/02

EXAMPLE CARCINOGENIC CALCULATION

$$IEXc = \frac{2.91 \text{ mg/kg} \times 480 \text{ mg/day} \times 10 \text{ days/year} \times 1 \text{ years} \times 1.0E\text{-}06 \text{ kg/mg}}{70 \text{ kg} \times 25550 \text{ days}}$$

IEXc = 7.81E-09 mg/kg/day

ICLR = 7.81E-09 mg/kg/day x 1.50E+00 (mg/kg/day)-1 = Incremental Lifetime Cancer Risk

ICLR = 1.17E-08

EXAMPLE NONCARCINOGENIC CALCULATION

$$IEXnc = \frac{2.91 \text{ mg/kg} \times 480 \text{ mg/day} \times 10 \text{ days/year} \times 1 \text{ years} \times 1.0E\text{-}06 \text{ kg/mg}}{70 \text{ kg} \times 365 \text{ days}}$$

IEXnc = 5.47E-07 mg/kg/day

HQ = 5.47E-07 mg/kg/day / 3.00E-04 (mg/kg/day) = Hazard Quotient

HQ = 1.82E-03

CLIENT: NCWS CRANE, INDIANA		JOB NUMBER: 7141
SUBJECT: CALCULATION OF INTAKE/RISK FROM DERMAL CONTACT WITH SOIL CONSTRUCTION WORKER		
BASED ON: USEPA, DEC. 2001		
BY: R. JUPIN	CHECKED BY:	DATE: 02/26/02

PURPOSE: To estimate intake, carcinogenic and noncarcinogenic risks from dermal contact with surface soil/subsurface soil at SWMU 2.

EQUATION:

$$DEX = \frac{Cs \times CF \times SA \times AF \times ABS \times EF \times ED}{BW \times AT}$$

Where:

DEX	=	estimated exposure intake (mg/kg/day)
Cs	=	exposure point concentration in soil/sediment (mg/kg)
CF	=	conversion factor (1.0E-6 kg/mg)
SA	=	skin surface available for contact (cm^2/day)
ABS	=	absorption factor (unitless)
AF	=	adherence factor (mg/cm^2)
EF	=	exposure frequency (days/year)
ED	=	exposure duration (years)
BW	=	body weight (kg)
AT	=	averaging time (days)
CSFd	=	dermal carcinogenic slope factor ((mg/kg/day)$^{-1}$)
RfDd	=	dermal noncarcinogenic reference dose (mg/kg/day)

RISKS:

ICLR (Carcinogens) = Intake (mg/kg/day) x CSFd (mg/kg/day)$^{-1}$

HQ (Noncarcinogens) = Intake (mg/kg/day) / RFDd (mg/kg/day)

ASSUMPTIONS:

Cs	=	2.91	mg/kg	Arsenic
CF	=	1.0E-06	kg/mg	
SA	=	3,300	cm^2/day	
AF	=	0.3	mg/cm^2	
ABS	=	0.03		
EF	=	10	days/year	
ED	=	1	years	
BW	=	70	kg	
ATc	=	25550	days	
ATnc	=	365	days	
CSFd	=	1.50E+00	(mg/kg/day)$^{-1}$	
RfDd	=	3.00E-04	(mg/kg/day)	

CLIENT: NCWS CRANE, INDIANA		JOB NUMBER: 7141
SUBJECT: CALCULATION OF INTAKE/RISK FROM DERMAL CONTACT WITH SOIL CONSTRUCTION WORKER		
BASED ON: USEPA, DEC. 2001		
BY: R. JUPIN	CHECKED BY:	DATE: 02/26/02

EXAMPLE CARCINOGENIC CALCULATION

$$DEXc = \frac{2.91 \text{ mg/kg} \times 1.0E\text{-}06 \text{ kg/mg} \times 3300 \text{ cm2/day} \times 0.3 \text{ mg/cm2} \times 0.03 \times 10 \text{ days/year} \times 1 \text{ years}}{70 \text{ kg} \times 25550 \text{ days}}$$

DEXc = 4.83E-10 mg/kg/day

ICLR = 4.83E-10 mg/kg/day x 1.50E+00 (mg/kg/day)-1 = Incremental Lifetime Cancer Risk

ICLR = 7.25E-10

EXAMPLE NONCARCINOGENIC CALCULATION

$$DEXnc = \frac{2.91 \text{ mg/kg} \times 1.0E\text{-}06 \text{ kg/mg} \times 3300 \text{ cm2/day} \times 0.3 \text{ mg/cm2} \times 0.03 \times 10 \text{ days/year} \times 1 \text{ years}}{70 \text{ kg} \times 365 \text{ days}}$$

DEXnc = 3.38E-08 mg/kg/day

HQ = 3.38E-08 mg/kg/day / 3.00E-04 (mg/kg/day) = Hazard Quotient

HQ = 1.13E-04

CALCULATION WORKSHEET

CLIENT: NSWC CRANE, INDIANA		**JOB NUMBER:** 7141
SUBJECT: CALCULATION OF INTAKE/RISK FROM INGESTION OF GROUNDWATER ADULT RESIDENT		
BASED ON: USEPA, DEC. 1989		
BY: R. JUPIN	**CHECKED BY:** J. Jackson	**DATE:** 02/26/02

PURPOSE: To estimate intake, carcinogenic and noncarcinogenic risks from ingestion of groundwater an adult resident.

EQUATION:

$$IEX = \frac{Csw \times CF \times IR \times EF \times ED}{BW \times AT}$$

Where:

IEX	=	estimated exposure intake (mg/kg/day)
Cgw	=	exposure point concentration in groundwater (ug/L)
CF	=	conversion factor (1.0E-3 mg/ug)
IR	=	ingestion rate (L/day)
EF	=	exposure frequency (days/year)
ED	=	exposure duration (years)
BW	=	body weight (kg)
AT	=	averaging time (days)
CSFo	=	oral carcinogenic slope factor ($(mg/kg/day)^{-1}$)
RfDo	=	oral noncarcinogenic reference dose (mg/kg/day)

RISKS:

ICLR (Carcinogens) = Intake (mg/kg/day) x CSFo $(mg/kg/day)^{-1}$

HQ (Noncarcinogens) = Intake (mg/kg/day) / RFDo (mg/kg/day)

ASSUMPTIONS:

Cgw	=	1.6	ug/L	Arsenic
IR	=	2	L/day	
CF	=	1.0E-03	mg/ug	
EF	=	350	days/year	
ED	=	24	years	
BW	=	70	kg	
ATc	=	25,550	days	
ATnc	=	8,760	days	
CSFo	=	1.5E+00	$(mg/kg/day)^{-1}$	
RfDo	=	3.0E-04	(mg/kg/day)	

CLIENT: NSWC CRANE, INDIANA		JOB NUMBER: 7141
SUBJECT: CALCULATION OF INTAKE/RISK FROM INGESTION OF GROUNDWATER ADULT RESIDENT		
BASED ON: USEPA, DEC. 1989		
BY: R. JUPIN	CHECKED BY:	DATE: 02/26/02

EXAMPLE CARCINOGENIC CALCULATION

$$IEXc = \frac{1.6\ ug/L \times 0.001\ mg/ug \times 2\ L/day \times 350\ days/year \times 24\ years}{70\ kg \times 25550\ days}$$

IEXc = 1.50E-05 mg/kg/day

ICLR = 1.50E-05 mg/kg/day x 1.50E+00 (mg/kg/day)-1 = Incremental Lifetime Cancer Risk

ICLR = 2.25E-05

EXAMPLE NONCARCINOGENIC CALCULATION

$$IEXnc = \frac{1.6\ ug/L \times 0.001\ mg/ug \times 2\ L/day \times 350\ days/year \times 24\ years}{70\ kg \times 8760\ days}$$

IEXnc = 4.38E-05 mg/kg/day

$$HQ = \frac{4.38E\text{-}05\ mg/kg/day}{3.00E\text{-}04\ (mg/kg/day)} = \text{Hazard Quotient}$$

HQ = 1.46E-01

CLIENT: NSWC CRANE, INDIANA		JOB NUMBER: 7141
SUBJECT: CALCULATION OF INTAKE/RISK FROM DERMAL CONTACT WITH GROUNDWATER ADULT RESIDENT		
BASED ON: USEPA, DEC. 2001		
BY: R. JUPIN	CHECKED BY:	DATE: 02/26/02

PURPOSE: To estimate intake, carcinogenic and noncarcinogenic risks from dermal contact with groundwater an adult resident.

EQUATION:

$$DAD = \frac{DAevent \times EV \times ED \times EF \times A}{BW \times AT}$$

Where:

DAD	=	dermally absorbed dose (mg/kg/day)
DAevent	=	absorbed does per event (mg/cm^2/event)
EV	=	event frequency (events/day)
EF	=	exposure frequency (days/year)
ED	=	exposure duration (years)
A	=	skin surface available for contact (cm^2)
BW	=	body weight (kg)
AT	=	averaging time (days)
CSFo	=	oral carcinogenic slope factor ((mg/kg/day)$^{-1}$)
RfDo	=	oral noncarcinogenic reference dose (mg/kg/day)

RISKS:

ICLR (Carcinogens) = DAD (mg/kg/day) x CSFd (mg/kg/day)$^{-1}$
HQ (Noncarcinogens) = DAD (mg/kg/day) / RfDd (mg/kg/day)

CLIENT: NSWC CRANE, INDIANA		JOB NUMBER: 7141
SUBJECT: CALCULATION OF INTAKE/RISK FROM DERMAL CONTACT WITH GROUNDWATER ADULT RESIDENT		
BASED ON: USEPA, DEC. 2001		
BY: R. JUPIN	CHECKED BY:	DATE: 02/26/02

EQUATION for DAevent:

For Inorganics:

$$DA_{event} = (K_p)\,(C_{gw})(CF)\,(t_{event})$$

For Organics:

$$\text{If } t_{event} < t^*, \text{ then : } DA_{event} = (2\,K_p)(C_{gw})(CF)\left(\sqrt{\frac{6\,\tau\,t_{event}}{\pi}}\right)$$

$$\text{If } t_{event} > t^*, \text{ then : } DA_{event} = (K_p)(C_{gw})(CF)\left(\frac{t_{event}}{1+B} + 2\,\tau\left(\frac{1+3B+3B^2}{(1+B)^2}\right)\right)$$

Where:

Kp	=	permeability coefficient from water (cm/hr)
Cgw	=	concentration of chemical in groundwater (mg/L)
tevent	=	duration of event (hr/event)
CF	=	conversion factor (0.001 L/cm^3)
Dsc	=	effective diffusivity for chemical transfer through skin (cm^2/hr)
t*	=	time it takes to reach steady-state (hr/event)
τ	=	lag time (hr/event)
B	=	Bunge Model Constant (dimensionless)

EXAMPLE CALCULATION OF DAevent

ASSUMPTIONS:

Cgw	=	0.0016	mg/L	Arsenic
Kp	=	0.001	cm/hr	
tevent	=	0.25	hr/event	
CF	=	0.001	L/cm^3	

DAevent = 0.001 cm/hr x 0.0016 mg/L x 0.001 L/cm3 x 0.25 hr/event

DAevent = 4.00E-10 mg/cm2-event

CLIENT: NSWC CRANE, INDIANA		JOB NUMBER: 7141
SUBJECT: CALCULATION OF INTAKE/RISK FROM DERMAL CONTACT WITH GROUNDWATER ADULT RESIDENT		
BASED ON: USEPA, DEC. 2001		
BY: R. JUPIN	CHECKED BY:	DATE: 02/26/02

RISK CALCULATIONS

ASSUMPTIONS:

A	=	18000	cm^2/day
EV	=	1	event/day
ED	=	24	years
EF	=	350	days/year
BW	=	70	kg
ATc	=	25550	days
ATnc	=	8760	days
CSFd	=	1.5E+00	$(mg/kg/day)^{-1}$
RfDd	=	3.0E-04	(mg/kg/day)

EXAMPLE CARCINOGENIC CALCULATION

$$DADc = \frac{4.00E\text{-}10 \text{ mg/cm2-event} \times 1 \text{ event/day} \times 24 \text{ years} \times 350 \text{ days/year} \times 18000 \text{ cm2/day}}{70 \text{ kg} \times 25550 \text{ days}}$$

DADc = 3.38E-08 mg/kg/day

DADc = 3.38E-08 mg/kg/day x 1.5 (mg/kg/day)-1 = Incremental Lifetime Cancer Risk

ICLR = 5.07E-08

EXAMPLE NONCARCINOGENIC CALCULATION

$$DADnc = \frac{4.00E\text{-}10 \text{ mg/cm2-event} \times 1 \text{ event/day} \times 24 \text{ years} \times 350 \text{ days/year} \times 18000 \text{ cm2/day}}{70 \text{ kg} \times 8760 \text{ days}}$$

DADnc = 9.86E-08 mg/kg/day

$$HQ = \frac{9.86E\text{-}08 \text{ mg/kg/day}}{3.00E\text{-}04 \text{ (mg/kg/day)}} = \text{Hazard Quotient}$$

HQ = 3.29E-04

CALCULATION WORKSHEET

CLIENT: NSWC CRANE, INDIANA		**JOB NUMBER:** 7141
SUBJECT: CALCULATION OF INTAKE/RISK FROM INCIDENTAL INGESTION OF SURFACE WATER ADULT RECREATIONAL USER		
BASED ON: USEPA, DEC. 1989		
BY: R. JUPIN	**CHECKED BY:**	**DATE:** 02/26/02

PURPOSE: To estimate intake, carcinogenic and noncarcinogenic risks from incidental ingestion of surface water by an adult recreational user.

EQUATION:

$$IEX = \frac{Csw \times CF \times CRsw \times ET \times EF \times ED}{BW \times AT}$$

Where:

IEX	=	estimated exposure intake (mg/kg/day)
Csw	=	exposure point concentration in surface water (ug/L)
CF	=	conversion factor (1.0E-3 mg/ug)
CRsw	=	contact rate (L/hour)
ET	=	exposure time (hours/day)
EF	=	exposure frequency (days/year)
ED	=	exposure duration (years)
BW	=	body weight (kg)
AT	=	averaging time (days)
CSFo	=	oral carcinogenic slope factor ($(mg/kg/day)^{-1}$)
RfDo	=	oral noncarcinogenic reference dose (mg/kg/day)

RISKS:

ICLR (Carcinogens) = Intake (mg/kg/day) x CSFo $(mg/kg/day)^{-1}$
HQ (Noncarcinogens) = Intake (mg/kg/day) / RFDo (mg/kg/day)

ASSUMPTIONS:

Csw	=	0.41	ug/L	Arsenic
CRsw	=	0.05	L/day	
CF	=	1.0E-03	mg/ug	
ET	=	1	hours	
EF	=	52	days/year	
ED	=	30	years	
BW	=	70	kg	
ATc	=	25,550	days	
ATnc	=	10,950	days	
CSFo	=	1.5E+00	$(mg/kg/day)^{-1}$	
RfDo	=	3.0E-04	(mg/kg/day)	

CLIENT: NSWC CRANE, INDIANA		JOB NUMBER: 7141
SUBJECT: CALCULATION OF INTAKE/RISK FROM INCIDENTAL INGESTION OF SURFACE WATER ADULT RECREATIONAL USER		
BASED ON: USEPA, DEC. 1989		
BY: R. JUPIN	CHECKED BY:	DATE: 02/26/02

EXAMPLE CARCINOGENIC CALCULATION

$$IEXc = \frac{0.41\ ug/L \times 1.0E\text{-}03\ mg/ug \times 0.05\ L/day \times 1\ hours \times 52\ days/year \times 30\ years}{70\ kg \times 25550\ days}$$

IEXc = 1.79E-08 mg/kg/day

ICLR = 1.79E-08 mg/kg/day x 1.50E+00 (mg/kg/day)-1 = Incremental Lifetime Cancer Risk

ICLR = 2.68E-08

EXAMPLE NONCARCINOGENIC CALCULATION

$$IEXnc = \frac{0.41\ ug/L \times 1.0E\text{-}03\ mg/ug \times 0.05\ L/day \times 1\ hours \times 52\ days/year \times 30\ years}{70\ kg \times 10950\ days}$$

IEXnc = 4.17E-08 mg/kg/day

$$HQ = \frac{4.17E\text{-}08\ mg/kg/day}{3.00E\text{-}04\ (mg/kg/day)} = \text{Hazard Quotient}$$

HQ = 1.39E-04

CALCULATION WORKSHEET

CLIENT: NSWC CRANE, INDIANA		**JOB NUMBER:** 7141
SUBJECT: CALCULATION OF INTAKE/RISK FROM DERMAL CONTACT WITH SURFACE WATER ADULT RECREATIONAL USER		
BASED ON: USEPA, DEC. 2001		
BY: R. JUPIN	**CHECKED BY:**	**DATE:** 02/26/02

PURPOSE: To estimate intake, carcinogenic and noncarcinogenic risks from dermal contact with surface water by an adult recreational user.

EQUATION:

$$DAD = \frac{DAevent \times EV \times ED \times EF \times A}{BW \times AT}$$

Where:

DAD	=	dermally absorbed dose (mg/kg/day)
DAevent	=	absorbed does per event ($mg/cm^2/event$)
EV	=	event frequency (events/day)
EF	=	exposure frequency (days/year)
ED	=	exposure duration (years)
A	=	skin surface available for contact (cm^2)
BW	=	body weight (kg)
AT	=	averaging time (days)
CSFo	=	oral carcinogenic slope factor ($(mg/kg/day)^{-1}$)
RfDo	=	oral noncarcinogenic reference dose (mg/kg/day)

RISKS:

ICLR (Carcinogens) = DAD (mg/kg/day) x CSFd $(mg/kg/day)^{-1}$
HQ (Noncarcinogens) = DAD (mg/kg/day) / RfDd (mg/kg/day)

CLIENT: NSWC CRANE, INDIANA		JOB NUMBER: 7141
SUBJECT: CALCULATION OF INTAKE/RISK FROM DERMAL CONTACT WITH SURFACE WATER ADULT RECREATIONAL USER		
BASED ON: USEPA, DEC. 2001		
BY: R. JUPIN	CHECKED BY:	DATE: 02/26/02

EQUATION for DAevent:

For Inorganics:

$$DA_{event} = (K_p)\,(C_{gw})(CF)\,(t_{event})$$

For Organics:

$$\text{If } t_{event} < t^*, \text{ then : } DA_{event} = (2K_p)(C_{gw})(CF)\left(\sqrt{\frac{6\,\tau\,t_{event}}{\pi}}\right)$$

$$\text{If } t_{event} > t^*, \text{ then : } DA_{event} = (K_p)(C_{gw})(CF)\left(\frac{t_{event}}{1+B} + 2\tau\left(\frac{1+3B+3B^2}{(1+B)^2}\right)\right)$$

Where:

Kp	=	permeability coefficient from water (cm/hr)
Cgw	=	concentration of chemical in groundwater (mg/L)
tevent	=	duration of event (hr/event)
CF	=	conversion factor (0.001 L/cm^3)
Dsc	=	effective diffusivity for chemical transfer through skin (cm^2/hr)
t*	=	time it takes to reach steady-state (hr/event)
τ	=	lag time (hr/event)
B	=	Bunge Model Constant (dimensionless)

EXAMPLE CALCULATION OF DAevent

ASSUMPTIONS:

Cgw	=	0.00041	mg/L	Arsenic
Kp	=	0.001	cm/hr	
tevent	=	1	hr/event	
CF	=	0.001	L/cm^3	

DAevent = 0.001 cm/hr x 0.00041 mg/L x 0.001 L/cm3 x 1 hr/event

DAevent = 4.10E-10 mg/cm2-event

CLIENT: NSWC CRANE, INDIANA		JOB NUMBER: 7141
SUBJECT: CALCULATION OF INTAKE/RISK FROM DERMAL CONTACT WITH SURFACE WATER ADULT RECREATIONAL USER		
BASED ON: USEPA, DEC. 2001		
BY: R. JUPIN	CHECKED BY:	DATE: 02/26/02

RISK CALCULATIONS

ASSUMPTIONS:

A	=	9070	cm^2/day
EV	=	1	event/day
ED	=	30	years
EF	=	52	days/year
BW	=	70	kg
ATc	=	25550	days
ATnc	=	10950	days
CSFd	=	1.5E+00	$(mg/kg/day)^{-1}$
RfDd	=	3.0E-04	(mg/kg/day)

EXAMPLE CARCINOGENIC CALCULATION

$$DADc = \frac{4.10E\text{-}10 \text{ mg/cm2-event} \times 1 \text{ event/day} \times 30 \text{ years} \times 52 \text{ days/year} \times 9070 \text{ cm2/day}}{70 \text{ kg} \times 25550 \text{ days}}$$

DADc = 3.24E-09 mg/kg/day

DADc = 3.24E-09 mg/kg/day x 1.5 (mg/kg/day)-1 = Incremental Lifetime Cancer Risk

ICLR = 4.87E-09

EXAMPLE NONCARCINOGENIC CALCULATION

$$DADnc = \frac{4.10E\text{-}10 \text{ mg/cm2-event} \times 1 \text{ event/day} \times 30 \text{ years} \times 52 \text{ days/year} \times 9070 \text{ cm2/day}}{70 \text{ kg} \times 10950 \text{ days}}$$

DADnc = 7.57E-09 mg/kg/day

$$HQ = \frac{7.57E\text{-}09 \text{ mg/kg/day}}{3.00E\text{-}04 \text{ (mg/kg/day)}} = \text{Hazard Quotient}$$

HQ = 2.52E-05

CALCULATION WORKSHEET

CLIENT: NSWC CRANE, INDIANA		**JOB NUMBER:** 7141
SUBJECT: CALCULATION OF INTAKE/RISK FROM INCIDENTAL INGESTION OF SEDIMENT ADOLESCENT TRESPASSER		
BASED ON: USEPA, DEC. 1989		
BY: R. JUPIN	**CHECKED BY:** L. Jackson	**DATE:** 02/26/02

PURPOSE: To estimate intake, carcinogenic and noncarcinogenic risks from incidental ingestion of sediment by an adolescent trespasser.

EQUATION:

$$IEX = \frac{Cs \times IR \times EF \times ED \times FI \times CF}{BW \times AT}$$

Where:

IEX	=	estimated exposure intake (mg/kg/day)
Cs	=	exposure point concentration in soil/sediment (mg/kg)
IR	=	incidental soil ingestion rate (mg/day)
EF	=	exposure frequency (days/year)
ED	=	exposure duration (years)
FI	=	fraction ingested from contaminated source (unitless)
CF	=	conversion factor (1.0E-6 kg/mg)
BW	=	body weight (kg)
AT	=	averaging time (days)
CSFo	=	oral carcinogenic slope factor ($(mg/kg/day)^{-1}$)
RfDo	=	oral noncarcinogenic reference dose (mg/kg/day)

RISKS:

ICLR (Carcinogens) = Intake (mg/kg/day) x CSFo $(mg/kg/day)^{-1}$

HQ (Noncarcinogens) = Intake (mg/kg/day) / RFDo (mg/kg/day)

ASSUMPTIONS:

Cs	=	3200	mg/kg	Manganese
IR	=	100	mg/day	
EF	=	52	days/year	
ED	=	11	years	
FI	=	1		
CF	=	1.0E-06	kg/mg	
BW	=	43	kg	
ATc	=	25550	days	
ATnc	=	4015	days	
CSFo	=	NA	$(mg/kg/day)^{-1}$	
RfDo	=	7.2E-02	(mg/kg/day)	

CLIENT: NSWC CRANE, INDIANA		JOB NUMBER: 7141
SUBJECT: CALCULATION OF INTAKE/RISK FROM INCIDENTAL INGESTION OF SEDIMENT ADOLESCENT TRESPASSER		
BASED ON: USEPA, DEC. 1989		
BY: R. JUPIN	CHECKED BY:	DATE: 02/26/02

EXAMPLE CARCINOGENIC CALCULATION

$$IEXc = \frac{3200 \text{ mg/kg} \times 100 \text{ mg/day} \times 52 \text{ days/year} \times 11 \text{ years} \times 1.0E\text{-}06 \text{ kg/mg}}{43 \text{ kg} \times 25550 \text{ days}}$$

IEXc = 1.67E-04 mg/kg/day

ICLR = 1.67E-04 mg/kg/day x NA (mg/kg/day)-1 = Incremental Lifetime Cancer Risk

ICLR = Not applicable, no CSF is available for manganese.

EXAMPLE NONCARCINOGENIC CALCULATION

$$IEXnc = \frac{3200 \text{ mg/kg} \times 100 \text{ mg/day} \times 52 \text{ days/year} \times 11 \text{ years} \times 1.0E\text{-}06 \text{ kg/mg}}{43 \text{ kg} \times 4015 \text{ days}}$$

IEXnc = 1.06E-03 mg/kg/day

$$HQ = \frac{1.06E\text{-}03 \text{ mg/kg/day}}{7.20E\text{-}02 \text{ (mg/kg/day)}} = \text{Hazard Quotient}$$

HQ = 1.47E-02

APPENDIX G.2

TOXICOLOGICAL PROFILES

TABLE OF CONTENTS

SECTION		PAGE
1.0	**ALUMINUM**	**1**
1.1	Noncancer Toxicity	1
1.2	Carcinogenicity	1
2.0	**ARSENIC**	**2**
2.1	Pharmacokinetics	2
2.2	Noncancer Toxicity	2
2.3	Carcinogenicity	3
3.0	**BERYLLIUM**	**3**
3.1	Noncancer Toxicity	3
3.2	Carcinogenicity	4
4.0	**CADMIUM**	**4**
4.1	Pharmacokinetics	4
4.2	Noncancer Toxicity	5
4.3	Carcinogenicity	5
5.0	**IRON**	**6**
5.1	Noncancer Toxicity	6
5.2	Carcinogenicity	6
6.0	**MANGANESE**	**6**
6.1	Noncancer Toxicity	6
6.2	Carcinogenicity	7
7.0	**NICKEL AND NICKEL COMPOUNDS**	**7**
7.1	Noncancer Toxicity	7
7.2	Carcinogenicity	8
SOURCES		**9**

1.0 ALUMINUM

Aluminum is a silver-white flexible metal with a vast number of uses. It is poorly absorbed and efficiently eliminated; however, when absorption does occur, aluminum is distributed mainly in bone, liver, testes, kidneys, and brain.

1.1 Noncancer Toxicity

Aluminum may be involved in Alzheimer's disease (dialysis dementia) and in Amyotrophic Lateral Sclerosis and Parkinsonism-Dementia Syndromes of Guam (Guam ALS-PD complex). Aluminum content of brain, muscle, and bone increases in Alzheimer's patients. Neurofibrillary tangles (NFTs) are found in patients suffering from aluminum encephalopathy and Alzheimer's disease. Symptoms of "dialysis dementia" include speech disorders, dementia, convulsions, and myoclonus. People of Guam and Rota have an unusually high incidence of neurodegenerative diseases. The volcanic soil in the region of Guam where the high incidence of ALS-PD occurs contains high levels of aluminum and manganese. Neurological effects have also been observed in rats orally exposed to aluminum compounds.

The respiratory system appears to be the primary target following inhalation exposure to aluminum. Alveolar proteinosis has been observed in guinea pigs, rats, and hamsters exposed to aluminum powders. No decrease in reproductive capacity, hormonal abnormalities, or testicular histopathology was observed in male rats exposed to aluminum in drinking water for 90 days. However, male rats exposed to aluminum (as aluminum chloride) via gavage for 6 months exhibited decreased spermatozoa counts and sperm motility, and testicular histological and histochemical changes.

Subchronic and chronic reference doses and reference concentrations have not been derived for aluminum. However, the EPA's National Center for Environmental Assessment (NCEA) has developed a provisional oral RfD of 1.00 mg/kg/day and an inhalation reference dose of 0.001 mg/kg/day.

1.2 Carcinogenicity

The U.S. EPA has not evaluated aluminum or aluminum compounds for carcinogenicity, and a weight-of-evidence classification is currently not assigned.

2.0 ARSENIC

2.1 Pharmacokinetics

Several studies confirm that soluble inorganic arsenic compounds and organic arsenic compounds are almost completely (>90 percent) absorbed from the GI tract in both animals and humans. The absorption efficiency of insoluble inorganic arsenic compounds depends on particle size an stomach pH. Initial distribution of absorbed arsenic is to the liver, kidneys, and lungs, flowed by redistribution to hair, nails, teeth, bone, and skin, which are considered tissues of accumulation. Arsenic has a long half-life in the blood of rats, compared with other animals and humans, because of firm binding to the hemoglobin in erythrocytes.

Metabolism of inorganic arsenic includes reversible oxidation-reduction so that both arsenite (valence of 3) and arsenate (valence of 5) are present in the urine of animals treated with arsenic of either valence. Arsenite is subsequently oxidized and methylated by a saturable mechanism to form mono- or dimethylarsenate; the latter is the predominant metabolite in the urine of animals or humans. Organic arsenic compounds (arsenilic acid, cacodylic acid) are not readily converted to inorganic arsenic. Excretion of organic or inorganic arsenic is largely via the urine, but considerable species variation exists. Continuously exposed humans appear to excrete 60 to 70 percent of their daily intake of arsenate or arsenite via the urine.

2.2 Noncancer Toxicity

A lethal dose of arsenic trioxide in humans is 70 to 180 milligrams (approximately 50 to 140 mg arsenic. Acute oral exposure of humans to high doses of arsenic produce liver swelling, skin lesions, disturbed heart function, and neurological effects. The only noncancer effects in humans clearly attributable to chronic oral exposure to arsenic are dermal hyperpigmentation and keratosis, as revealed by studies of several hundred Chinese exposed to naturally occurring arsenic in well water. Similar effects were observed in persons exposed to high levels of arsenic in water in Utah and the northern part of Mexico. Occupational (predominantly inhalation) exposure is also associated with neurological deficits, anemia, and cardiovascular effects, but concomitant exposure to other chemicals cannot be ruled out. The EPA derived an RfD of 0.0003 mg/kg/day for chronic oral exposure, based on an NOAEL of 0.0008 mg/kg/day for skin lesions from Chinese data. The principal target organ for arsenic appears to be the skin. The nervous system and cardiovascular systems appear to be less significant target organs. Inorganic arsenic may be an essential nutrient, exerting beneficial effects on growth, health, and feed conversion efficiency .

2.3 Carcinogenicity

Inorganic arsenic is clearly a carcinogen in humans. Inhalation exposure is associated with increased risk of lung cancer in persons employed as smelter workers, in arsenical pesticide applicators, and in a population residing near a pesticide manufacturing plant. Oral exposure to high levels in well water is associated with increased risk of skin cancer. Extensive animal testing with various forms of arsenic given by many routes of exposure to several species, however, has not demonstrated the carcinogenicity of arsenic. The EPA classifies inorganic arsenic in cancer weight-of-evidence Group A (human carcinogen), and recommends an oral unit risk of 0.00005 ug/L in drinking water, based on the incidence of skin cancer in the Chinese study. The EPA presents a chronic oral slope factor of 1.5 per mg/kg/day based on the same information. The EPA notes that the uncertainties associated with the oral unit risk are considerably less than those for most carcinogens, so that the unit risk might be reduced in order of magnitude. An inhalation unit risk of 0.0043 per mg/m^3 was derived for inorganic arsenic from the incidence of lung cancer in occupationally exposed men, equivalent to 15.1 per mg/kg/day, was derived from the same data assuming an inhalation rate of 20 m^3/day and a body weight of 70 kg for humans.

3.0 BERYLLIUM

Beryllium is present in the earth's crust, in emissions from coal combustion, in surface water and soil, and in house dust, food, drinking water, and cigarette smoke. However, the highest risk for exposure occurs among workers employed in beryllium manufacturing, fabricating, or reclamation industries.

3.1 Noncancer Toxicity

Inhaled beryllium is absorbed slowly and localizes mainly in the lungs, bone, liver and kidneys. Ingested beryllium undergoes limited absorption and localizes in liver, kidneys, lungs, stomach, spleen and the large and small intestines. Significant absorption of beryllium or its compounds through intact skin is unlikely because of its chemical properties. Beryllium per se is not biotransformed, but soluble salts may be converted to less soluble compounds in the lung. Most orally administered beryllium passes through the gastrointestinal tract unabsorbed and is excreted in the feces, whereas inhaled water-soluble beryllium salts are excreted mainly by the kidneys. Limited data indicate that the oral toxicity of beryllium is low. The chronic oral RfD for beryllium (0.002 mg/kg/day) is based on small intestinal lesions in a dietary study of dogs.

In contrast, the toxicity of inhaled beryllium is well-documented. Humans inhaling "massive" doses of beryllium compounds (such as the water soluble sulfate, fluoride, chloride, and oxide) may develop acute berylliosis. The severity of acute beryllium toxicity correlates with exposure levels, and the disease is now

rarely observed in the United States because of improved industrial hygiene. Humans inhaling beryllium may also develop chronic berylliosis which, in contrast to acute berylliosis, is highly variable in onset, is more likely to be fatal, and can develop a few months to >=20 years after exposure. Chronic beryllium disease is a systemic disease that primarily affects the lungs and is characterized by the development of non-caseating granulomas. The disease most likely results from a hypersensitivity response to beryllium as evidenced by positive patch tests and positive lymphocyte transformation tests in exposed individuals. Granulomas may also appear in the skin, liver, spleen, lymph nodes, myocardium, skeletal muscles, kidney, bone, and salivary glands.

3.2 Carcinogenicity

Epidemiologic studies have suggested that beryllium and its compounds could be human carcinogens. In a study that covered 15 regions of the U.S., a significant correlation was found between cancers of the breast, bone and uterus and the concentration and detection frequency of beryllium in drinking water. However, imperfect analytical and sampling methods used in the study prompted the U.S. EPA to conclude that these results are not proof of cause and effect relationships between cancer and beryllium in drinking water. Studies in workers exposed to beryllium, mostly via inhalation, have shown significant increases in observed over expected lung cancer incidences. The U.S. EPA, in evaluating the total database for the association of lung cancer with occupational exposure to beryllium, noted several limitations, but concluded that the results must be considered to be at least suggestive of a carcinogenic risk to humans.

Based on sufficient evidence for animals and inadequate evidence for humans, beryllium has been placed in the EPA weight-of-evidence classification B2, probable human carcinogen. For inhalation exposure, the unit the cancer slope factor is 8.4 $(mg/kg/day)^{-1}$. The U.S. EPA does not currently publish an oral cancer slope factor for beryllium.

4.0 CADMIUM

4.1 Pharmacokinetics

Estimates of cadmium uptake by the respiratory tract range from 10 to 50 percent; uptake is greatest for fumes and small particles and least for large dust particles. GI absorption of ingested cadmium is ordinarily 5 to 8 percent, but may reach 20 percent in cases of serious dietary ion deficiency. Highest tissue levels are normally found in the kidneys followed by the liver, although levels in the liver may exceed those in the kidneys of persons suffering from cadmium-induced renal dysfunction. The half-life of cadmium in the kidneys and liver may be as long as 10-30 years. Fecal and urinary excretion of

cadmium are approximately equivalent to normal humans exposed to small amounts. Urinary excretion increases markedly in humans with cadmium-induced renal disease.

4.2 Noncancer Toxicity

Acute inhalation exposure to fumes or particles of cadmium induces respiratory symptoms, general weakness, and, in severe cases, respiratory insufficiency, shock, and death. Acute oral exposure induces GI disturbances. Chronic inhalation exposure induces pulmonary emphysema, and chronic exposure by either route consistently produces renal tubular disease in humans and laboratory animals. Proteinuria is a reliable early indicator of cadmium-induced kidney disease. The combination of pulmonary emphysema and renal tubular disease, if severe, may result in early mortality. Painful osteomalacia and osteoporosis may arise from altered metabolism of bone minerals secondary to renal damage. The combination of renal and skeletal damage is called itai-itai disease in Japan. Cadmium exposure has been associated with liver damage, but the liver appears to be less sensitive than the kidney. The kidney is the primary target organ of cadmium toxicity. The EPA derived chronic oral RfD values of 0.0005 mg/kg/day for cadmium ingested in water and 0.001 mg/kg/day for cadmium ingested in food, based on a toxicokinetic model that predicted NOAELs from renal cortical concentration of cadmium. The different RfD values reflect assumed differences in GI absorption of cadmium from water (5 percent) and food (2.5 percent). The EPA currently employs an inhalation reference dose of 5.7E-05 mg/kg/day for cadmium.

4.3 Carcinogenicity

Carcinogenicity data in humans consist of several occupational studies that associate cadmium exposure with lung cancer, but concomitant exposure to other carcinogenic chemicals and smoking were not adequately controlled. Other occupational studies reported significantly increased risk of prostatic cancer, but this effect was not observed in the largest occupational study of workers exposed to high levels. The animal data consist of an inhalation study in rats that showed a significant increase in lung tumors, and several parenteral injection studies that produced injection site tumors. No evidence of carcinogenicity, however, was observed in seven oral studies in rats and mice. The EPA classifies cadmium a cancer weight-of-evidence Group B1 substance for inhalation exposure on the basis of limited evidence of carcinogenicity in humans and sufficient evidence in animals. The data were insufficient to classify cadmium as carcinogenic to humans exposed by the oral route. An inhalation unit risk of 0.0018 mg/m^3, equivalent to 6.3 per mg/kg/day, was derived from an occupational exposure study assuming an inhalation rate of 20 m^3/day and a body weight of 70 kg for humans.

5.0 IRON

5.1 Noncancer Toxicity

Iron is potentially toxic in all forms and by all routes of exposure. Inorganic iron is a poison by the intraperitoneal route. The inhalation of large amounts of iron dust may result in iron pneumoconiosis or arc welders lung. Chronic exposure to excess levels of iron (>50-100 mg Iron/day) can result in pathological deposition of iron in tissues. The target organs are the pancreas and liver.

Iron compounds are of varying toxicity. Iron oxides are a potential risk in all industrial settings. In general, ferrous compounds are more toxic than ferric compounds. Acute exposure to excessive levels of ferrous compounds can cause liver and kidney damage, altered respiratory rates and convulsions. An oral RfD of 0.3 mg/kg/day has been published for iron by the EPA based on based on allowable intakes rather than adverse effect levels. No inhalation RfD has been established for iron.

5.2 Carcinogenicity

Some iron compounds are suspected human carcinogens. Iron dust is an experimental neoplastigen and an increased incidence of lung cancer has been associated with exposure to iron dust. Iron oxide is an experimental tumorigen and a suspected human carcinogen. EPA has not published oral or inhalation slope factors for iron.

6.0 MANGANESE

6.1 Noncancer Toxicity

Manganese is nutritionally required in humans for normal growth and health. Humans exposed to approximately 0.8 mg manganese/kg/day in drinking water exhibited lethargy, mental disturbances (1/16 committed suicide), and other neurologic effects. The elderly appeared to be more sensitive than children. Oral treatment of laboratory rodents induced biochemical changes in the brain, but rodents did not exhibit the neurological signs exhibited by humans. Occupational exposure to high concentrations in air induced a generally typical spectrum of neurological effects and an increased incidence of pneumonia.

EPA has established an oral RfD of 0.02 mg/kg/day for manganese based on drinking water and an oral RfD of 0.14 mg/kg/day based on food. The EPA presented a verified chronic inhalation RfC based on a LOAEL for impairment of neurobehaviorial function in occupationally exposed humans. The inhalation RfC

is equivalent to 1.43E-5 mg/kg/day, assuming humans inhale 20 m^3 of air/day and weigh 70 kg. The CNS and respiratory tract are target organs of inhalation exposure to manganese.

6.2 Carcinogenicity

The EPA classifies manganese in cancer weight-of-evidence Group D (not classifiable as to carcinogenicity to humans). Quantitative cancer risk estimates are not derived from Group D chemicals.

7.0 NICKEL AND NICKEL COMPOUNDS

7.1 Noncancer Toxicity

Nickel is a naturally occurring element that may exist in various mineral forms. It is used in a wide variety of applications including metallurgical processes and electrical components, such as batteries. Some evidence suggests that nickel may be an essential trace element for mammals. The absorption of nickel is dependent on its physicochemical form, with watersoluble forms being more readily absorbed. The metabolism of nickel involves conversion to various Chemical forms and binding to various ligands. Nickel is excreted in the urine and feces with relative amounts for each route being dependent on the route of exposure and chemical form. Most nickel enters the body via food and water consumption, although inhalation exposure in occupational settings is a primary route for nickel-induced toxicity. In large doses (>0.5 g), some forms of nickel may be acutely toxic to humans when taken orally. Oral LD50 values for rats range from 67 mg nickel/kg (nickel sulfate hexahydrate) to >9000 mg nickel/kg (nickel powder). Toxic effects of oral exposure to nickel usually involve the kidneys with some evidence from animal studies showing a possible developmental/reproductive toxicity effect.

Inhalation exposure to some nickel compounds will cause toxic effects in the respiratory tract and immune system. Inhalation LC50 values for animals range from 0.97 mg nickel/m^3 for rats (6-hour exposure) to 15 mg nickel/m^3 for guinea pigs (time not specified). Acute inhalation exposure of humans to nickel may produce headache, nausea, respiratory disorders, and death. Asthmatic conditions have also been documented for inhalation exposure to nickel. Soluble nickel compounds tend to be more toxic than insoluble compounds. In addition, nickel carbonyl is known to be extremely toxic to humans upon acute inhalation exposure. Data on nickel-induced reproductive/developmental effects in humans following inhalation exposure are equivocal. No clinical evidence of developmental or reproductive toxicity were reported for women working in a nickel refinery, possible reproductive and developmental effects in humans of occupational exposure to nickel (0.13-0.2 mg nickel/m^3)have been reported. Furthermore, sensitivity reactions to nickel are well documented and usually involve contact dermatitis reactions resulting from contact with nickel-containing items such as cooking utensils, jewelry, coins, etc.

A chronic and subchronic oral reference dose (RfD) of 0.02 mg/kg/day for soluble nickel salts is based on changes in organ and body weights of rats receiving dietary nickel sulfate hexahydrate (5 mg/kg/day) for 2 years. A no-observed-adverse-effect level (NOAEL) and lowest-observed-adverse-effects level (LOAEL) of 5 mg/kg/day and 50 mg/kg/day, respectively, were reported in the key study. An uncertainty factor of 300 reflects interspecies extrapolation uncertainty, protection of sensitive populations, and a modifying factor of 3 for a database deficient in reproductive/developmental studies. An inhalation reference concentration (RfC) for soluble nickel salts is under review by the RfD/RfC Work Group and currently is not available.

7.2 Carcinogenicity

The primary target organs for nickel-induced systemic toxicity are the lungs and upper respiratory tract for inhalation exposure and the kidneys for oral exposure. Other target organs include the cardiovascular system, immune system, and the blood.

Epidemiologic studies have shown that occupational inhalation exposure to nickel dust (primarily nickel subsulfate) at refineries has resulted in increased incidences of pulmonary and nasal cancer. Inhalation studies using rats have also shown nickel subsulfate or nickel carbonyl to be carcinogenic. Based on these data, the EPA has classified nickel subsulfate and nickel refinery dust in weight-of-evidence group A, human carcinogen. Carcinogenicity slope factors of 1.7E+0 and 8.4E-01$(mg/kg/day)^{-1}$ have been calculated for nickel subsulfide and nickel refinery dust, respectively

SOURCES

The information contained in the Toxicological Profiles has been extracted from the following sources:

Agency for Toxic Substances and Disease Registry, ToxFAQs (Online), http://www.atsdr.cdc.gov.toxfaq.html, February 2002.

Hazardous Substance Data Base (HSDB), Online, http://toxnet.nlm.nih/gov/cgi/sis, February 2002.

U.S. EPA (U.S. Environmental Protection Agency). February 2002. Integrated Risk Information System (IRIS) - On-Line Database, http://www.epa.gov/ngispgm3/iris/subst/index.html.

U.S. Department of Energy, February 2002. Toxicity Profiles (Summary), Risk Assessment Information System (RAIS), Office of Environmental Management, Oak Ridge Operations (ORO), http://risk.lsd.ornl.gov/rap_hp.shtml.

U.S. Environmental Protection Agency (USEPA), Region 9, November 2000. "Region 9 Preliminary Remediation Goals (PRGs) 2000", EPA Region 9, 75 Hawthorne Street, San Francisco, California, 94105.

U.S. Environmental Protection Agency (USEPA), Region 3, September 2001. Risk-Based Concentration Table. EPA Region 3, 841 Chestnut Street, Philadelphia, Pennsylvania 19107.

USEPA, July 1997, Health Effects Assessment Summary Tables (HEAST)

APPENDIX G.3

RAGS-PART D TABLES

TABLE 1
SELECTION OF EXPOSURE PATHWAYS
SWMU 2 - DYE BURIAL GROUND
NSWC CRANE
CRANE, INDIANA

Scenario Timeframe	Medium	Exposure Medium	Exposure Point	Receptor Population	Receptor Age	Exposure Route	On-Site/ Off-Site	Type of Analysis	Rationale for Selection or Exclusion of Exposure Pathway
Current/Future	Surface Soil	Surface Soil	Surface Soil	Construction Workers	Adult	Ingestion Dermal	On-Site On-Site	Quant Quant	Construction workers may have contact with soil outside the capped area during excavation activities.
				Maintenance Worker	Adult	Ingestion Dermal	On-Site On-Site	None None	Maintenance workers may contact surface soil outside the capped area during normal work activities. No COCs were identified in surface soil; therefore, this pathway is not evaluated.
				Trespassers	Adolescents	Ingestion Dermal	On-Site On-Site	None None	Although access to the base is controlled, once inside the base, access to the SWMU 2 is not limited by any physical restraint. No COCs were identified in surface soil; therefore, this pathway is not evaluated.
		Air	Surface Soil	Construction Workers	Adult	Inhalation	On-Site	None	Construction workers may be exposed to fugitive dust and volatile emissions during construction activities. No COPCs were identified in soil for the inhalation pathway.
				Maintenance Worker	Adult	Inhalation	On-Site	None	Maintenance workers may be exposed to fugitive dust and volatile emissions during work activities. No COCs were identified in surface soil; therefore, this pathway is not evaluated.
				Trespassers	Adolescents	Inhalation	On-Site	None	Although access to the base is controlled, once inside the base, access to the SWMU 2 is not limited by any physical restraint. No COCs were identified in surface soil, therefore this pathway is not evaluated.
	Subsurface Soil	Subsurface Soil	Subsurface Soil	Construction Workers	Adult	Ingestion Dermal	On-Site On-Site	Quant Quant	Construction workers may have contact with soil outside the capped area during excavation activities.
				Maintenance Worker	Adult	Ingestion Dermal	On-Site On-Site	None None	Maintenance workers are not exposed to subsurface soil.
				Trespassers	Adolescents	Ingestion Dermal	On-Site On-Site	None None	Trespassers are not exposed to subsurface soil.
		Air	Subsurface Soil	Construction Workers	Adult	Inhalation	On-Site	None	Construction workers may be exposed to fugitive dust and volatile emissions during construction activities. No COPCs were identified in soil for the inhalation pathway.
				Maintenance Worker	Adult	Inhalation	On-Site	None	Maintenance workers are not exposed to subsurface soil.
				Trespassers	Adolescents	Inhalation	On-Site	None	Trespassers are not exposed to subsurface soil.
	Ground Water	Ground Water	Upper/Lower Pennsylvania Aquifer	Construction Workers	Adult	Ingestion Dermal	On-Site On-Site	None None	Extensive ground-intrusive activities are not expected to occur at the site because it is unlikely that the cap will be disturbed. Therefore, construction workers are not expected to come into contact with ground water.
				Maintenance Workers	Adult	Ingestion Dermal	On-Site On-Site	None None	Maintenance workers are not expected to have contact with ground water.
				Trespassers	Adolescents	Ingestion Dermal	On-Site On-Site	None None	Adolescent trespassers are not expected to have contact with ground water.
		Air	Upper/Lower Pennsylvania Aquifer	Construction Workers	Adult	Inhalation	On-Site	None	Extensive ground-intrusive activities are not expected to occur at the site because it is unlikely that the cap will be disturbed. Therefore, construction workers are not expected to come into contact with ground water.
				Maintenance Workers	Adult	Inhalation	On-Site	None	Maintenance workers are not expected to have contact with ground water.
				Trespassers	Adolescents	Inhalation	On-Site	None	Adolescent trespassers are not expected to have contact with ground water.

TABLE 1
SELECTION OF EXPOSURE PATHWAYS
SWMU 2 - DYE BURIAL GROUND
NSWC CRANE
CRANE, INDIANA

Scenario Timeframe	Medium	Exposure Medium	Exposure Point	Receptor Population	Receptor Age	Exposure Route	On-Site/ Off-Site	Type of Analysis	Rationale for Selection or Exclusion of Exposure Pathway
Current	Surface Water	Surface Water	Surface Water	Construction Workers	Adult	Ingestion	On-Site	None	Construction workers are not expected to contact surface water.
						Dermal	On-Site	None	
				Maintenance Workers	Adult	Ingestion	On-Site	None	Maintenance workers are not expected to contact surface water.
						Dermal	On-Site	None	
				Trespassers	Adolescents	Ingestion	On-Site	Quant	Adolescent trespassers may be exposed to surface water while at the site.
						Dermal	On-Site	Quant	
	Sediment	Sediment	Sediment	Construction Workers	Adult	Ingestion	On-Site	None	Construction workers are not expected to contact sediment.
						Dermal	On-Site	None	
				Maintenance Workers	Adult	Ingestion	On-Site	None	Maintenance workers are not expected to contact sediment.
						Dermal	On-Site	None	
				Trespassers	Adolescents	Ingestion	On-Site	Quant	Trespassers may be exposed to sediment while at the site.
						Dermal	On-Site	Quant	
Future	Surface Soil	Surface Soil	Surface Soil	Recreational Users	Adult	Ingestion	On-Site	Quant	This scenario is evaluated on the assumption that the Facility would close and be turned into a state park in the future.
						Dermal	On-Site	Quant	
				Residents	Child	Ingestion	On-Site	None	Because the site is capped, a deed restriction will prohibit future development of the site.
						Dermal	On-Site	None	
					Adult	Ingestion	On-Site	None	Because the site is capped, a deed restriction will prohibit future development of the site.
						Dermal	On-Site	None	
		Air	Surface Soil	Recreational Users	Adult	Inhalation	On-Site	Quant (1)	Recreational users may be exposed to fugitive dust and volatile emissions while at the site.
				Residents	Child	Inhalation	On-Site	None	Because the site is capped, a deed restriction will prohibit future development of the site.
					Adult	Inhalation	On-Site	None	Because the site is capped, a deed restriction will prohibit future development of the site.
	Ground Water	Ground Water	Upper/Lower Pennsylvanian Aquifer	Recreational Users	Adult	Ingestion	On-Site	None	Recreational users are not expected to have contact with ground water.
						Dermal	On-Site	None	
				Residents	Child	Ingestion	On-Site	Quant	Although it is unlikely that ground water at the site would be used as a potable water supply, this scenario is included to aid in future risk management decisions.
						Dermal	On-Site	Quant	
					Adult	Ingestion	On-Site	Quant	Although it is unlikely that ground water at the site would be used as a potable water supply, this scenario is included to aid in future risk management decisions.
						Dermal	On-Site	Quant	
		Air	Upper/Lower Pennsylvanian Aquifer	Recreational Users	Adult	Inhalation	On-Site	None	Recreational users are not expected to have contact with ground water. In addition, VOCs were not detected in ground water at SWMU 2.
				Residents	Child	Inhalation	On-Site	None	VOCs were not detected in ground water at SWMU 2
					Adult	Inhalation	On-Site	None	VOCs were not detected in ground water at SWMU 2
	Surface Water	Surface Water	Surface Water	Recreational Users	Adult	Ingestion	On-Site	Quant	This scenario is evaluated on the assumption that the Facility would close and be turned into a state park in the future.
						Dermal	On-Site	Quant	
				Residents	Child	Ingestion	On-Site	None	Because the site is capped, a deed restriction will prohibit future development of the site.
						Dermal	On-Site	None	
					Adult	Ingestion	On-Site	None	Because the site is capped, a deed restriction will prohibit future development of the site.
						Dermal	On-Site	None	

TABLE 1
SELECTION OF EXPOSURE PATHWAYS
SWMU 2 - DYE BURIAL GROUND
NSWC CRANE
CRANE, INDIANA

Scenario Timeframe	Medium	Exposure Medium	Exposure Point	Receptor Population	Receptor Age	Exposure Route	On-Site/ Off-Site	Type of Analysis	Rationale for Selection or Exclusion of Exposure Pathway
Future	Sediment	Sediment	Sediment	Recreational Users	Adult	Ingestion	On-Site	Quant	This scenario is evaluated on the assumption that the Facility would close and be turned into a state park in the future.
						Dermal	On-Site	Quant	
				Residents	Child	Ingestion	On-Site	None	Because the site is capped, a deed restriction will prohibit future development of the site.
						Dermal	On-Site	None	
					Adult	Ingestion	On-Site	None	Because the site is capped, a deed restriction will prohibit future development of the site.
						Dermal	On-Site	None	

TABLE 2.1
OCCURRENCE, DISTRIBUTION AND SELECTION OF CHEMICALS OF POTENTIAL CONCERN - DIRECT CONTACT WITH SURFACE SOIL
NSWC CRANE
CRANE, INDIANA

Scenario Timeframe: Current/Future
Medium: Surface Soil
Exposure Medium: Surface Soil
Exposure Point: SWMU 2 - Dye Burial Ground

CAS Number	Chemical	Minimum Concentration (1)	Minimum Qualifier	Maximum Concentration (1)	Maximum Qualifier	Units	Location of Maximum Concentration	Detection Frequency	Range of Nondetects(2)	Concentration Used for Screening(3)	Site Above Background? (4)	EPA Region 9 PRG-Residential (5)	Potential ARAR/TBC Value	Potential ARAR/TBC Source	COPC Flag	Rationale for Contaminant Deletion or Selection(6)
	Inorganics															
7429-90-5	ALUMINUM	7750		12500		MG/KG	02SS200001	13/13	NA	12500	No	7600 N	NA	NA	No	BKG
7440-36-0	ANTIMONY	0.45		0.5		MG/KG	02SS090002	4/13	0.4 - 0.48	0.5	No	3.1 N	140	IDEM	No	BSL, BKG
7440-38-2	ARSENIC	2.6		8.4	J	MG/KG	02SS200001	13/13	NA	8.4	No	0.39 C	3.9	IDEM	No	BKG
7440-39-3	BARIUM	55		209		MG/KG	02SS160001	13/13	NA	209	No	540 N	23000	IDEM	No	BSL, BKG
7440-41-7	BERYLLIUM	0.56		0.85		MG/KG	02SS100002	3/13	0.49 - 2.3	0.85	Yes	15 N	680	IDEM	No	BSL
7440-43-9	CADMIUM	0.43	J	0.62		MG/KG	02SS160001	4/13	0.4 - 0.49	0.62	No	3.7 N	12	IDEM	No	BSL, BKG
7440-70-2	CALCIUM	842		15400	J	MG/KG	02SS200001	12/13	421	15400	Yes	NA	NA	NA	No	NUT
7440-47-3	CHROMIUM	9.9		40.8		MG/KG	02SS190001	13/13	NA	40.8	No	30 (7) C	430	IDEM	No	BKG
7440-48-4	COBALT	3.9		19		MG/KG	02SS160001	13/13	NA	19	No	470 N	NA	NA	No	BSL, BKG
7440-50-8	COPPER	8		11.8		MG/KG	02SS200001	13/13	NA	11.8	Yes	290 N	13000	IDEM	No	BSL
7439-89-6	IRON	11400		23500		MG/KG	02SS110001	13/13	NA	23500	No	2300 N	NA	NA	No	BKG
7439-92-1	LEAD	9.3		184	J	MG/KG	02SS190001	13/13	NA	184	No	400	400	IDEM	No	BSL, BKG
7439-95-4	MAGNESIUM	1080		3310		MG/KG	02SS050001	13/13	NA	3310	Yes	NA	NA	NA	No	NUT
7439-96-5	MANGANESE	124		1800		MG/KG	02SS160001	13/13	NA	1800	No	180 N	NA	NA	No	BKG
7439-97-6	MERCURY	0.02	J	0.05	J	MG/KG	02SS200001, 02SS160001, 02SS190001	12/13	0.02	0.05	No	2.3 N	55	IDEM	No	BSL, BKG
7440-02-0	NICKEL	6.6		15		MG/KG	02SS160001	13/13	NA	15	No	160 N	6900	IDEM	No	BSL, BKG
7440-09-7	POTASSIUM	547	J	892	J	MG/KG	02SS190001	12/13	421	892	No	NA	NA	NA	No	NUT, BKG
7782-49-2	SELENIUM	0.52		0.7		MG/KG	02SS100002	6/13	0.4 - 0.45	0.7	No	39 N	1700	IDEM	No	BSL, BKG
7440-62-2	VANADIUM	18.6	J	25.9	J	MG/KG	02SS040001	13/13	NA	25.9	No	55 N	NA	NA	No	BSL, BKG
7440-66-6	ZINC	15.9	J	50.2	J	MG/KG	02SS190001	13/13	NA	50.2	No	2300 N	100000	IDEM	No	BSL, BKG

Notes:
(1) - Only the original of duplicate samples was considered for COPC selection. The duplicate was used for quality control purposes only.
(2) - Values presented are sample-specific quantitation limits.
(3) - The maximum detected concentration is used for screening purposes.
(4) - To determine whether metal concentrations were within background levels, soil concentrations were compared to Base-wide background data presented in the Basewide Background Soil Investigation Report (TINUS, Inc., January 2001) by means of the Wilcoxon Rank Sum Test. If the Wilcoxon Test determined that a constituent concentration was not significantly different from background, that chemical was not selected as a COPC.
(5) - U.S. EPA Region 9 Preliminary Remediation Goals Table, November 1, 2000. (Cancer benchmark value = 1E-06, HI = 0.1).
(6) - Rationale Codes
Selection Reason: Above Screening Levels (ASL)
No Toxicity Information (NTX)
Deletion Reason: Essential Nutrient (NUT)
Below Screening Level (BSL)
Below Background Value (BKG)
(7) - Value is for hexavalent chromium.
Shaded cells indicate that the specified criterion has been exceeded or that the chemical has been selected as a COPC.

Definitions:
NA = Not Applicable.
SQL = Sample Quantitation Limit.
COPC = Chemical of Potential Concern.
ARAR/TBC = Applicable or Relevant and Appropriate Requirement/To Be Considered.
J = Estimated Value.
C = Carcinogenic.
N = Noncarcinogenic.
IDEM = Indiana Department of Environmental Management, Risk Integrated System of Closure (RISC) residential levels for direct contact with soil (IDEM, July 2001).

Associated Samples

02SS030001	02SS080001	02SS150001	02SS180001
02SS030002	02SS080002	02SS150002	02SS180002
02SS040001	02SS090002	02SS160001	02SS190001
02SS040002	02SS100002	02SS160002	02SS190002
02SS050001	02SS110001	02SS170001	02SS200001
02SS050002	02SS110002	02SS170002	02SS200002

TABLE 2.2
OCCURRENCE, DISTRIBUTION AND SELECTION OF CHEMICALS OF POTENTIAL CONCERN - MIGRATION FROM SURFACE SOIL
NSWC CRANE, INDIANA
CRANE, INDIANA

Scenario Timeframe: Current/Future
Medium: Surface Soil
Exposure Medium: Surface Soil
Exposure Point: SWMU 2 - Dye Burial Ground

CAS Number	Chemical	Minimum Concentration (1)	Minimum Qualifier	Maximum Concentration (1)	Maximum Qualifier	Units	Location of Maximum Concentration	Detection Frequency	Range of Nondetects(2)	Concentration Used for Screening(3)	Site Above Background? (4)	USEPA Generic SSL for Soil to Air (5)	USEPA Generic SSL for Migration to Ground Water (5)	IDEM SSL for Migration to Ground Water (6)	COPC Flag	Rationale for Contaminant Deletion or Selection(7)
	Inorganics															
7429-90-5	ALUMINUM	7750		12500		MG/KG	02SS200001	13/13	NA	12500	No	NA	NA	NA	No	BKG
7440-36-0	ANTIMONY	0.45		0.5		MG/KG	02SS090002	4/13	0.4 - 0.48	0.5	No	NA	0.3	5.4	No	BKG
7440-38-2	ARSENIC	2.6		8.4	J	MG/KG	02SS200001	13/13	NA	8.4	No	750	1	29	No	BKG
7440-39-3	BARIUM	55		209		MG/KG	02SS160001	13/13	NA	209	No	690000	82	1600	No	BKG
7440-41-7	BERYLLIUM	0.56		0.85		MG/KG	02SS100002	3/13	0.49 - 2.3	0.85	Yes	1300	3	63	No	BSL, BKG
7440-43-9	CADMIUM	0.43	J	0.62		MG/KG	02SS160001	4/13	0.4 - 0.49	0.62	No	1800	0.4	7.5	No	BKG
7440-70-2	CALCIUM	842		15400	J	MG/KG	02SS200001	12/13	421	15400	Yes	NA	NA	NA	No	NUT
7440-47-3	CHROMIUM	9.9		40.8		MG/KG	02SS190001	13/13	NA	40.8	No	270	2	38	No	BKG
7440-48-4	COBALT	3.9		19		MG/KG	02SS160001	13/13	NA	19	No	NA	NA	NA	No	BKG
7440-50-8	COPPER	8		11.8		MG/KG	02SS200001	13/13	NA	11.8	Yes	NA	NA	580	No	BSL
7439-89-6	IRON	11400		23500		MG/KG	02SS110001	13/13	NA	23500	No	NA	NA	NA	No	BKG
7439-92-1	LEAD	9.3		184	J	MG/KG	02SS190001	13/13	NA	184	No	NA	NA	81	No	BKG
7439-95-4	MAGNESIUM	1080		3310		MG/KG	02SS050001	13/13	NA	3310	Yes	NA	NA	NA	No	NUT
7439-96-5	MANGANESE	124		1800		MG/KG	02SS160001	13/13	NA	1800	No	NA	NA	NA	No	BKG
7439-97-6	MERCURY	0.02	J	0.05	J	MG/KG	02SS200001, 02SS160001, 02SS190001	12/13	0.02	0.05	No	10	0.1	2.1	No	BSL, BKG
7440-02-0	NICKEL	6.6		15		MG/KG	02SS160001	13/13	NA	15	No	13000	7	950	No	BKG
7440-09-7	POTASSIUM	547	J	892	J	MG/KG	02SS190001	12/13	421	892	No	NA	NA	NA	No	NUT, BKG
7782-49-2	SELENIUM	0.52		0.7		MG/KG	02SS100002	6/13	0.4 - 0.45	0.7	No	NA	0.3	5.2	No	BKG
7440-62-2	VANADIUM	18.6	J	25.9	J	MG/KG	02SS040001	13/13	NA	25.9	No	NA	300	NA	No	BSL, BKG
7440-66-6	ZINC	15.9	J	50.2	J	MG/KG	02SS190001	13/13	NA	50.2	No	NA	620	14000	No	BSL, BKG

Notes:
(1) - Only the original of duplicate samples was considered for COPC selection. The duplicate was used for quality control purposes only.
(2) - Values presented are sample-specific quantitation limits.
(3) - The maximum detected concentration is used for screening purposes.
(4) - To determine whether metal concentrations were within background levels, soil concentrations were compared to Base-wide background data presented in the Basewide Background Soil Investigation Report (TtNUS, Inc., January 2001) by means of the Wilcoxon Rank Sum Test. If the Wilcoxon Test determined that a constituent concentration was not significantly different from background, that chemical was not selected as a COPC.
(5) - Soil Screening Guidance: Technical Background Document. (U.S. EPA, May 1996). The migration to groundwater value represents a dilution attenuation factor (DAF) of 1.
(6) - Residential levels for migration from soil to groundwater (IDEM, July 2001).
(7) - Rationale Codes
Selection Reason: Above Screening Levels (ASL)
No Toxicity Information (NTX)
Deletion Reason: Essential Nutrient (NUT)
Below Screening Level (BSL)
Below Background Value (BKG)

Shaded cells indicate that the specified criterion has been exceeded or that the chemical has been selected as a COPC.

Definitions:
NA = Not Applicable.
SQL = Sample Quantitation Limit.
COPC = Chemical of Potential Concern.
ARAR/TBC = Applicable or Relevant and Appropriate Requirement/To Be Considered.
J = Estimated Value.
IDEM = Indiana Department of Environmental Management, Risk Integrated System of Closure (RISC) residential levels for migration from soil to ground water (IDEM, July 2001).

Associated Samples

02SS030001	02SS080001	02SS150001	02SS180001
02SS030002	02SS080002	02SS150002	02SS180002
02SS040001	02SS090002	02SS160001	02SS190001
02SS040002	02SS100002	02SS160002	02SS190002
02SS050001	02SS110001	02SS170001	02SS200001
02SS050002	02SS110002	02SS170002	02SS200002

TABLE 2.4
OCCURRENCE, DISTRIBUTION AND SELECTION OF CHEMICALS OF POTENTIAL CONCERN - MIGRATION FROM SUBSURFACE SOIL
NSWC CRANE
CRANE, INDIANA

Scenario Timeframe: Current/Future
Medium: Subsurface Soil
Exposure Medium: Subsurface Soil
Exposure Point: SWMU 2 - Dye Burial Ground

CAS Number	Chemical	Minimum Concentration (1)	Minimum Qualifier	Maximum Concentration (1)	Maximum Qualifier	Units	Location of Maximum Concentration	Detection Frequency	Range of Nondetects(2)	Concentration Used for Screening(3)	Site Above Background? (4)	USEPA Generic SSL for Soil to Air (5)	USEPA Generic SSL for Migration to Ground Water (5)	IDEM SSL for Migration to Ground Water (6)	COPC Flag	Rationale for Contaminant Deletion or Selection(7)
	Inorganics															
7429-90-5	ALUMINUM	1570		11300		MG/KG	02SB120507	20/20	NA	11300	Yes	NA	NA	NA	No	NTX
7440-36-0	ANTIMONY	0.93		0.93		MG/KG	02SB040305	1/20	0.39 - 0.46	0.93	No	NA	0.3	5.4	No	BKG
7440-38-2	ARSENIC	0.4		7.5	J	MG/KG	02SB040305	16/20	0.21 - 1.6	7.5	Yes	750	1	29	Yes	ASL
7440-39-3	BARIUM	11.4		73.8	J	MG/KG	02SB040305	20/20	NA	73.8	Yes	690000	82	1600	No	BSL
7440-70-2	CALCIUM	457		1030	J	MG/KG	02SB040305	5/20	391 - 454	1030	Yes	NA	NA	NA	No	NUT
7440-47-3	CHROMIUM	3.4		19.1		MG/KG	02SB120507	20/20	NA	19.1	Yes	270	2	38	Yes	ASL
7440-48-4	COBALT	0.59		17.7		MG/KG	02SB080810	13/20	0.42 - 2.3	17.7	Yes	NA	NA	NA	No	NTX
7440-50-8	COPPER	2		12.6		MG/KG	02SB040305	20/20	NA	12.6	Yes	NA	NA	580	No	BSL
7439-89-6	IRON	714		24100		MG/KG	02SB120507	20/20	NA	24100	Yes	NA	NA	NA	No	NTX
7439-92-1	LEAD	4.4	J	13.6	J	MG/KG	02SB040305	20/20	NA	13.6	No	NA	NA	81	No	BSL, BKG
7439-95-4	MAGNESIUM	423		1500		MG/KG	02SB040305	12/20	391 - 421	1500	No	NA	NA	NA	No	NUT, BKG
7439-96-5	MANGANESE	1.9		798		MG/KG	02SB040305	20/20	NA	798	No	NA	NA	NA	No	BKG
7439-97-6	MERCURY	0.03	J	0.03	J	MG/KG	02SB040305	1/20	0.02	0.03	No	10	0.1	2.1	No	BSL, BKG
7440-02-0	NICKEL	1.1		25.3		MG/KG	02SB080810	20/20	NA	25.3	Yes	13000	7	950	Yes	ASL
7440-09-7	POTASSIUM	397		630	J	MG/KG	02SB040305	6/20	391 - 497	630	Yes	NA	NA	NA	No	NUT
7440-62-2	VANADIUM	6.6		28.5		MG/KG	02SB120507	17/20	5.1 - 7.3	28.5	Yes	NA	300	NA	No	BSL
7440-66-6	ZINC	2.5	J	57.8	J	MG/KG	02SB010911	19/20	2.1	57.8	Yes	NA	620	14000	No	BSL
	Dyes															
1936-15-8	ACID ORANGE 10	3.85	J	3.85	J	MG/KG	02SB010911	1/20	15.1	3.85	Yes	NA	NA	NA	No	BSL
1934-21-0	ACID YELLOW 23	2.85		11.5	J	MG/KG	02SB040305	6/20	15.1	11.5	Yes	NA	NA	NA	No	BSL
	Miscellaneous Parameters															
	CATION EXCHANGE CAPACITY	2.30	J	19.0	J	MEQ/1	02SB120507	10/10	NA	19.0	NA	NA	NA	NA	No	NTX
	pH	4.90	J	6.30	J	S.U.	02SB140709	10/10	NA	6.30	NA	NA	NA	NA	No	NTX
	TOTAL ORGANIC CARBON	1000		1900		MG/KG	02SB020810	10/10	NA	1900	NA	NA	NA	NA	No	NTX

Notes:
(1) - Only the original of duplicate samples was considered for COPC selection. The duplicate was used for quality control purposes only.
(2) - Values presented are sample-specific quantitation limits.
(3) - The maximum detected concentration is used for screening purposes.
(4) - To determine whether metal concentrations were within background levels, soil concentrations were compared to Base-wide background data presented in the Basewide Background Soil Investigation Report (TtNUS, Inc., January 2001) by means of the Wilcoxon Rank Sum Test. If the Wilcoxon Test determined that a constituent concentration was not significantly different from background, that chemical was not selected as a COPC.
(5) - Soil Screening Guidance: Technical Background Document, (U.S. EPA, May 1996). The migration to groundwater value represents a dilution attenuation factor (DAF) of 1.
(6) - Residential levels for migration from soil to groundwater (IDEM, July 2001).
(7) - Rationale Codes
Selection Reason: Above Screening Levels (ASL)
No Toxicity Information (NTX)
Deletion Reason: Essential Nutrient (NUT)
Below Screening Level (BSL)
Below Background Value (BKG)

Shaded cells indicate that the specified criterion has been exceeded or that the chemical has been selected as a COPC.

Definitions:
NA = Not Applicable.
SQL = Sample Quantitation Limit.
COPC = Chemical of Potential Concern.
ARAR/TBC = Applicable or Relevant and Appropriate Requirement/To Be Considered.
J = Estimated Value.
C = Carcinogenic.
N = Noncarcinogenic.
IDEM = Indiana Department of Environmental Management, Risk Integrated System of Closure (RISC) residential levels for migration from soil to ground water (IDEM, July 2001).

Associated Samples

02SB010911	02SB060709	02SB110406	02SB160507
02SB020810	02SB070709	02SB120507	02SB170608
02SB030709	02SB080810	02SB130507	02SB180507
02SB040305	02SB090709	02SB140709	02SB190406
02SB050809	02SB100810	02SB150608	02SB200608

TABLE 2.3
OCCURRENCE, DISTRIBUTION AND SELECTION OF CHEMICALS OF POTENTIAL CONCERN - DIRECT CONTACT WITH SUBSURFACE SOIL
NSWC CRANE
CRANE, INDIANA

Scenario Timeframe: Current/Future
Medium: Subsurface Soil
Exposure Medium: Subsurface Soil
Exposure Point: SWMU 2 - Dye Burial Ground

CAS Number	Chemical	Minimum Concentration (1)	Minimum Qualifier	Maximum Concentration (1)	Maximum Qualifier	Units	Location of Maximum Concentration	Detection Frequency	Range of Nondetects(2)	Concentration Used for Screening(3)	Site Above Background? (4)	EPA Region 9 PRG-Residential (5)	Potential ARAR/TBC Value	Potential ARAR/TBC Source	COPC Flag	Rationale for Contaminant Deletion or Selection(6)
	Inorganics															
7429-90-5	ALUMINUM	1570		11300		MG/KG	02SB120507	20/20	NA	11300	Yes	7600 N	NA	NA	Yes	ASL
7440-36-0	ANTIMONY	0.93		0.93		MG/KG	02SB040305	1/20	0.39 - 0.46	0.93	No	3.1 N	140	IDEM	No	BSL, BKG
7440-38-2	ARSENIC	0.4		7.5	J	MG/KG	02SB040305	16/20	0.21 - 1.6	7.5	Yes	0.39 C	3.9	IDEM	Yes	ASL
7440-39-3	BARIUM	11.4		73.8	J	MG/KG	02SB040305	20/20	NA	73.8	Yes	540 N	23000	IDEM	No	BSL
7440-70-2	CALCIUM	457		1030	J	MG/KG	02SB040305	5/20	391 - 454	1030	Yes	NA	NA	NA	No	NUT
7440-47-3	CHROMIUM	3.4		19.1		MG/KG	02SB120507	20/20	NA	19.1	Yes	30 (7) C	430 (7)	IDEM	No	BSL
7440-48-4	COBALT	0.59		17.7		MG/KG	02SB080810	13/20	0.42 - 2.3	17.7	Yes	470 N	NA	NA	No	BSL
7440-50-8	COPPER	2		12.6		MG/KG	02SB040305	20/20	NA	12.6	Yes	290 N	13000	IDEM	No	BSL
7439-89-6	IRON	714		24100		MG/KG	02SB120507	20/20	NA	24100	Yes	2300 N	NA	NA	Yes	ASL
7439-92-1	LEAD	4.4	J	13.6	J	MG/KG	02SB040305	20/20	NA	13.6	No	400	400	IDEM	No	BSL, BKG
7439-95-4	MAGNESIUM	423		1500		MG/KG	02SB040305	12/20	391 - 421	1500	No	NA	NA	NA	No	NUT, BKG
7439-96-5	MANGANESE	1.9		798		MG/KG	02SB040305	20/20	NA	798	No	180 N	NA	NA	No	BKG
7439-97-6	MERCURY	0.03	J	0.03	J	MG/KG	02SB040305	1/20	0.02	0.03	No	2.3 N	55	IDEM	No	BSL, BKG
7440-02-0	NICKEL	1.1		25.3		MG/KG	02SB080810	20/20	NA	25.3	Yes	160 N	6900	IDEM	No	BSL
7440-09-7	POTASSIUM	397		630	J	MG/KG	02SB040305	6/20	391 - 497	630	Yes	NA	NA	NA	No	NUT
7440-62-2	VANADIUM	6.6		28.5		MG/KG	02SB120507	17/20	5.1 - 7.3	28.5	Yes	55 N	NA	NA	No	BSL
7440-66-6	ZINC	2.5	J	57.8	J	MG/KG	02SB010911	19/20	2.1	57.8	Yes	2300 N	100000	IDEM	No	BSL
	Dyes															
1936-15-8	ACID ORANGE 10	3.85	J	3.85	J	MG/KG	02SB010911	1/20	15.1	3.85	Yes	15 N	NA	NA	No	BSL
1934-21-0	ACID YELLOW 23	2.85		11.5	J	MG/KG	02SB040305	6/20	15.1	11.5	Yes	NA	NA	NA	No	BSL
	Miscellaneous Parameters															
	CATION EXCHANGE CAPACITY	2.30	J	19.0	J	MEQ/1	02SB120507	10/10	NA	19.0	NA	NA	NA	NA	No	NTX
	pH	4.90	J	6.30	J	S.U.	02SB140709	10/10	NA	6.30	NA	NA	NA	NA	No	NTX
	TOTAL ORGANIC CARBON	1000		1900		MG/KG	02SB020810	10/10	NA	1900	NA	NA	NA	NA	No	NTX

Notes:
(1) - Only the original of duplicate samples was considered for COPC selection. The duplicate was used for quality control purposes only.
(2) - Values presented are sample-specific quantitation limits.
(3) - The maximum detected concentration is used for screening purposes.
(4) - To determine whether metal concentrations were within background levels, soil concentrations were compared to Base-wide background data presented in the Basewide Background Soil Investigation Report (TtNUS, Inc., January 2001) by means of the Wilcoxon Rank Sum Test. If the Wilcoxon Test determined that a constituent concentration was not significantly different from background, that chemical was not selected as a COPC.
(5) - U.S. EPA Region 9 Preliminary Remediation Goals Table, November 1, 2000. (Cancer benchmark value = 1E-06, HI = 0.1)
(6) - Rationale Codes
Selection Reason: Above Screening Levels (ASL)
No Toxicity Information (NTX)
Deletion Reason: Essential Nutrient (NUT)
Below Screening Level (BSL)
Below Background Value (BKG)
(7) - Value is for hexavalent chromium.
Shaded cells indicate that the specified criterion has been exceeded or that the chemical has been selected as a COPC.

Definitions:
NA = Not Applicable.
SQL = Sample Quantitation Limit.
COPC = Chemical of Potential Concern.
ARAR/TBC = Applicable or Relevant and Appropriate Requirement/To Be Considered.
J = Estimated Value.
C = Carcinogenic.
N = Noncarcinogenic.
IDEM = Indiana Department of Environmental Management, Risk Integrated System of Closure (RISC) residential levels for direct contact with soil (IDEM, July 2001).

Associated Samples

02SB010911	02SB060709	02SB110406	02SB160507
02SB020810	02SB070709	02SB120507	02SB170608
02SB030709	02SB080810	02SB130507	02SB180507
02SB040305	02SB090709	02SB140709	02SB190406
02SB050809	02SB100810	02SB150608	02SB200608

TABLE 2.5
OCCURRENCE, DISTRIBUTION AND SELECTION OF CHEMICALS OF POTENTIAL CONCERN
NSWC CRANE
CRANE, INDIANA

Scenario Timeframe: Current/Future
Medium: Ground Water
Exposure Medium: Upper Pennsylvania Aquifer
Exposure Point: SWMU 2 - Dye Burial Ground

CAS Number	Chemical	Minimum Concentration (1)	Minimum Qualifier	Maximum Concentration (1)	Maximum Qualifier	Units	Location of Maximum Concentration	Detection Frequency	Range of Detection Limits (2)	Concentration Used for Screening (3)	Site Above Background? (4)	Screening Toxicity Value (5)	Potential ARAR/TBC Value	Potential ARAR/TBC Source	COPC Flag	Rationale for Contaminant Deletion or Selection (6)
	Inorganics															
7440-36-0	ARSENIC	0.63		1.2		UG/L	02GW0101	2/2	NA	1.2	No	0.045 C	10 50	FED-MCL IDEM	No	BKG
7440-38-2	BARIUM	10.6		13.6		UG/L	02GW0101	2/2	NA	13.6	No	260 N	2000 2000	FED-MCL IDEM	No	BSL, BKG
7440-41-7	CADMIUM	1.3		1.3		UG/L	02GWC12P301	1/2	1	1.3	Yes	1.8 N	5 5	FED-MCL IDEM	No	BSL
7440-43-9	CALCIUM	142000		166000		UG/L	02GWC12P301	2/2	NA	166000	No	NA	NA NA	NA NA	No	NUT, BKG
7440-70-2	COBALT	6.5		6.5		UG/L	02GWC12P301	1/2	3	6.5	No	220 N	NA NA	NA IDEM	No	BSL, BKG
7440-48-4	IRON	440	J	465	J	UG/L	02GW0101	2/2	NA	465	No	1100 N	300 NA	FED-SMCL NA	No	BKG
57-12-5	MAGNESIUM	83100		121000		UG/L	02GWC12P301	2/2	NA	121000	No	NA	NA NA	NA NA	No	NUT
7439-89-6	MANGANESE	35		440		UG/L	02GWC12P301	2/2	NA	440	No	88 N	50 NA	FED-SMCL NA	No	BKG
7439-92-1	NICKEL	16		16		UG/L	02GWC12P301	1/2	10	16	No	73 N	NA 730	NA IDEM	No	BSL, BKG
7439-95-4	POTASSIUM	9360		9360		UG/L	02GWC12P301	1/2	5000	9360	No	NA	NA NA	NA NA	No	NUT, BKG
7439-96-5	SELENIUM	3.6	J	15.7	J	UG/L	02GW0101	2/2	NA	15.7	Yes	18 N	50 50	FED-MCL IDEM	No	BSL
7440-02-0	SODIUM	141000		213000		UG/L	02GW0101	2/2	NA	213000	Yes	NA	NA NA	NA NA	No	NUT
7440-09-7	ZINC	10.9	J	53	J	UG/L	02GWC12P301	2/2	NA	53	No	1100 N	5000 11000	FED-SMCL IDEM	No	BSL, BKG
	Miscellaneous Parameters															
	CHLORIDE	100		150		MG/L	02GW0101	2/2	NA	150	NA	NA	NA	NA	No	NTX
	SULFATE	740		970		MG/L	02GWC12P301	2/2	NA	970	NA	NA	NA	NA	No	NTX
	TOTAL ORGANIC CARBON	3.2		5		MG/L	02GWC12P301	2/2	NA	5	NA	NA	NA	NA	No	NTX
	TOTAL SUSPENDED SOLIDS	3	J	7	J	MG/L	02GW0101	2/2	NA	7	NA	NA	NA	NA	No	NTX

Notes:
(1) - Only the original of duplicate samples was considered for COPC selection. The duplicate was used for quality control purposes only.
(2) - Values presented are sample-specific quantitation limits.
(3) - The maximum detected concentration is used for screening purposes.
(4) - To determine whether metal concentrations were within background levels, groundwater concentrations were statistically compared to concentrations in upgradient groundwater samples. If the site groundwater concentrations were less than the upgradient concentrations, that metal was not selected as a COPC. See Section 4.
(5) - U.S. EPA Region 9 Preliminary Remediation Goals Table, November 1, 2000. (Cancer benchmark value = 1E-06, HI = 0.1).
(6) - Rationale Codes
Selection Reason: Above Screening Levels (ASL)
No Toxicity Information (NTX)
Deletion Reason: Essential Nutrient (NUT)
Below Screening Level (BSL)
Below Background Value (BKG)

Shaded cells indicate that the specified criterion has been exceeded or that the chemical has been selected as a COPC.

Associated Samples

Definitions:
NA = Not Applicable.
SQL = Sample Quantitation Limit.
COPC = Chemical of Potential Concern.
ARAR/TBC = Applicable or Relevant and Appropriate Requirement/To Be Considered
J = Estimated Value.
C = Carcinogenic.
N = Non-Carcinogenic
FED-MCL = Federal Maximum Contaminant Level (U.S. EPA, Summer 2000)
SMCL = Federal Secondary Maximum Contaminant Level based on aesthetic FED-water quality (U.S. EPA, Summer 2000)
IDEM = Indiana Department of Environmental Management, Risk Integrated System of Closure (RISC) residential closure levels for ground water (IDEM, July 2001)

TABLE 2.5
OCCURRENCE, DISTRIBUTION AND SELECTION OF CHEMICALS OF POTENTIAL CONCERN
NSWC CRANE
CRANE, INDIANA

Scenario Timeframe: Current/Future
Medium: Ground Water
Exposure Medium: Upper Pennsylvania Aquifer
Exposure Point: SWMU 2 - Dye Burial Ground

CAS Number	Chemical	Minimum Concentration (1)	Minimum Qualifier	Maximum Concentration (1)	Maximum Qualifier	Units	Location of Maximum Concentration	Detection Frequency	Range of Detection Limits (2)	Concentration Used for Screening (3)	Site Above Background? (4)	Screening Toxicity Value (5)	Potential ARAR/TBC Value	Potential ARAR/TBC Source	COPC Flag	Rationale for Contaminant Deletion or Selection (6)
02GW0101		02GWC12P301														

TABLE 2.6
OCCURRENCE, DISTRIBUTION AND SELECTION OF CHEMICALS OF POTENTIAL CONCERN
NSWC CRANE
CRANE, INDIANA

Scenario Timeframe: Current/Future
Medium: Ground Water
Exposure Medium: Lower Pennsylvania Aquifer
Exposure Point: SWMU 2 - Dye Burial Ground

CAS Number	Chemical	Minimum Concentration (1)	Minimum Qualifier	Maximum Concentration (1)	Maximum Qualifier	Units	Location of Maximum Concentration	Detection Frequency	Range of Detection Limits (2)	Concentration Used for Screening (3)	Site Above Background? (4)	Screening Toxicity Value (5)	Potential ARAR/TBC Value	Potential ARAR/TBC Source	COPC Flag	Rationale for Contaminant Deletion or Selection (6)
	Inorganics															
7429-90-5	ALUMINUM	23300		23300		UG/L	02GWC11P301	1/4	200	23300	Yes	3600 N	50 to 200 NA	FED-SMCL NA	Yes	ASL
7440-36-0	ARSENIC	0.85		1.6		UG/L	02GW0701	4/4	NA	1.6	Yes	0.045 C	10 50	FED-MCL IDEM	Yes	ASL
7440-38-2	BARIUM	9		38.8		UG/L	02GW0201	4/4	NA	38.8	No	260 N	2000 2000	FED-MCL IDEM	No	BSL, BKG
7440-39-3	BERYLLIUM	4.7		4.7		UG/L	02GWC11P301	1/4	1	4.7	Yes	7.3 N	4 4	FED-MCL IDEM	Yes	ASL
7440-41-7	CADMIUM	1.3		16.1		UG/L	02GWC11P301	2/4	1	16.1	Yes	1.8 N	5 5	FED-MCL IDEM	Yes	ASL
7440-43-9	CALCIUM	131000		412000		UG/L	02GW0701	4/4	NA	412000	No	NA	NA NA	NA NA	No	NUT, BKG
7440-70-2	COBALT	6.4		445		UG/L	02GWC11P301	2/4	3	445	Yes	220 N	NA NA	NA NA	Yes	ASL
7440-47-3	COPPER	21.5		21.5		UG/L	02GWC11P301	1/4	2	21.5	No	140 N	1300 (7) 1300	FED-MCL IDEM	No	BSL, BKG
7440-48-4	IRON	684	J	3350	J	UG/L	02GWC11P301	4/4	NA	3350	No	1100 N	300 NA	FED-SMCL NA	No	BKG
7440-50-8	LEAD	4.8		4.8		UG/L	02GWC11P301	1/4	1	4.8	Yes	NA	15 (7) 15	FED-MCL IDEM	No	BSL
57-12-5	MAGNESIUM	55600		152000		UG/L	02GW0701	4/4	NA	152000	No	NA	NA NA	NA NA	No	NUT, BKG
7439-89-6	MANGANESE	25.3		1720		UG/L	02GWC11P301	4/4	NA	1720	No	88 N	50 NA	FED-SMCL NA	No	BKG
7439-92-1	NICKEL	28		868		UG/L	02GWC11P301	4/4	NA	868	Yes	73 N	NA 730	NA IDEM	Yes	ASL
7439-95-4	POTASSIUM	5050		5050		UG/L	02GW0801	1/4	5000	5050	No	NA	NA NA	NA NA	No	NUT, BKG
7439-96-5	SELENIUM	2.4	J	11.4	J	UG/L	02GW0701	4/4	NA	11.4	No	18 N	50 50	FED-MCL IDEM	No	BSL, BKG
7440-02-0	SODIUM	33600		70200		UG/L	02GW0701	4/4	NA	70200	No	NA	NA NA	NA NA	No	NUT, BKG
7440-09-7	ZINC	10.5	J	2280	J	UG/L	02GWC11P301	4/4	NA	2280	Yes	1100 N	5000 11000	FED-SMCL IDEM	Yes	ASL
	Miscellaneous Parameters															
	CHLORIDE	25		170		MG/L	02GW0701	4/4	NA	170	NA	NA	NA	NA	No	NTX
	SULFATE	830		1300		MG/L	02GW0701	4/4	NA	1300	NA	NA	NA	NA	No	NTX
	TOTAL ORGANIC CARBON	1.3		2.2		MG/L	02GW0801	3/4	NA	2.2	NA	NA	NA	NA	No	NTX
	TOTAL SUSPENDED SOLIDS	4	J	4	J	MG/L	02GWC11P301	1/4	NA	4	NA	NA	NA	NA	No	NTX

TABLE 2.6
OCCURRENCE, DISTRIBUTION AND SELECTION OF CHEMICALS OF POTENTIAL CONCERN
NSWC CRANE
CRANE, INDIANA

Scenario Timeframe: Current/Future
Medium: Ground Water
Exposure Medium: Lower Pennsylvania Aquifer
Exposure Point: SWMU 2 - Dye Burial Ground

CAS Number	Chemical	Minimum Concentration (1)	Minimum Qualifier	Maximum Concentration (1)	Maximum Qualifier	Units	Location of Maximum Concentration	Detection Frequency	Range of Detection Limits (2)	Concentration Used for Screening (3)	Site Above Background? (4)	Screening Toxicity Value (5)	Potential ARAR/TBC Value	Potential ARAR/TBC Source	COPC Flag	Rationale for Contaminant Deletion or Selection (6)

Notes:

(1) - Only the original of duplicate samples was considered for COPC selection. The duplicate was used for quality control purposes only.

(2) - Values presented are sample-specific quantitation limits.

(3) - The maximum detected concentration is used for screening purposes.

(4) - To determine whether metal concentrations were within background levels, groundwater concentrations were statistically compared to concentrations in upgradient ground water samples. If the site groundwater concentrations were less than the upgradient concentrations, that metal was not selected as a COPC. See Section 4.

(5) - U.S. EPA Region 9 Preliminary Remediation Goals Table, November 1, 2000. (Cancer benchmark value = 1E-06, HI = 0.1).

(6) - Rationale Codes

Selection Reason:
- Above Screening Levels (ASL)
- No Toxicity Information (NTX)

Deletion Reason:
- Essential Nutrient (NUT)
- Below Screening Level (BSL)
- Below Background Value (BKG)

(7) - Action level (U.S. EPA, Summer 2000).

Shaded cells indicate that the specified criterion has been exceeded or that the chemical has been selected as a COPC.

Associated Samples

02GW0201
02GW0501
02GW0701
02GW0801
02GWC11P301

Definitions:

NA = Not Applicable.
SQL = Sample Quantitation Limit.
COPC = Chemical of Potential Concern.
ARAR/TBC = Applicable or Relevant and Appropriate Requirement/To Be Considered.
J = Estimated Value.
C = Carcinogenic.
N = Non-Carcinogenic.
FED-MCL = Federal Maximum Contaminant Level (U.S. EPA, Summer 2000).
FED-SMCL = Federal Secondary Maximum Contaminant Level based on aesthetic water quality (U.S. EPA, Summer 2000).
IDEM = Indiana Department of Environmental Management, Risk Integrated System of Closure (RISC) residential closure levels for ground water (IDEM, July 2001)

TABLE 2.7
OCCURRENCE, DISTRIBUTION AND SELECTION OF CHEMICALS OF POTENTIAL CONCERN
NSWC CRANE, INDIANA
CRANE, INDIANA

Scenario Timeframe: Current/Future
Medium: Surface Water
Exposure Medium: Surface Water
Exposure Point: SWMU 2 - Dye Burial Ground

CAS Number	Chemical	Minimum Concentration (1)	Minimum Qualifier	Maximum Concentration (1)	Maximum Qualifier	Units	Location of Maximum Concentration	Detection Frequency	Range of Detection Limits (2)	Concentration Used for Screening (3)	Site Above Background? (4)	Screening Toxicity Value (5)	Potential ARAR/TBC Value	Potential ARAR/TBC Source	COPC Flag	Rationale for Contaminant Deletion or Selection (6)
	Inorganics, Unfiltered															
7429-90-5	ALUMINUM	523		523		UG/L	02SW0701	1/1	NA	523	Yes	3600 N	50 to 200 NA	FED-SMCL NA	Yes	ASL
7440-36-0	ARSENIC	0.41		0.41		UG/L	02SW0701	1/1	NA	0.41	Yes	0.045 C	10 50	FED-MCL IDEM	Yes	ASL
7440-38-2	BARIUM	78		78		UG/L	02SW0701	1/1	NA	78	Yes	260 N	2000 2000	FED-MCL IDEM	No	BSL
7440-43-9	CALCIUM	49700		49700		UG/L	02SW0701	1/1	NA	49700	Yes	NA	NA NA	NA NA	No	NUT
7440-48-4	IRON	874	J	874	J	UG/L	02SW0701	1/1	NA	874	Yes	1100 N	300 NA	FED-SMCL NA	Yes	ASL
57-12-5	MAGNESIUM	11700		11700		UG/L	02SW0701	1/1	NA	11700	Yes	NA	NA NA	NA NA	No	NUT
7439-89-6	MANGANESE	43.4		43.4		UG/L	02SW0701	1/1	NA	43.4	No	88 N	50 NA	FED-SMCL NA	No	BSL, BKG
7440-02-0	SODIUM	11500		11500		UG/L	02SW0701	1/1	NA	11500	Yes	NA	NA NA	NA NA	No	NUT
	Inorganics, Filtered															
7440-39-3	BARIUM, FILTERED	74.1		74.1		UG/L	02SW0701-F	1/1	NA	74.1	Yes	260 N	2000 2000	FED-MCL IDEM	No	ASL
7440-70-2	CALCIUM, FILTERED	51500		51500		UG/L	02SW0701-F	1/1	NA	51500	Yes	NA	NA NA	NA NA	No	NUT
7439-89-6	IRON, FILTERED	140	J	140	J	UG/L	02SW0701-F	1/1	NA	140	Yes	1100 N	300 NA	FED-SMCL NA	No	BSL
7439-95-4	MAGNESIUM, FILTERED	12400		12400		UG/L	02SW0701-F	1/1	NA	12400	Yes	NA	NA NA	NA NA	No	NUT
7440-23-5	SODIUM, FILTERED	12200		12200		UG/L	02SW0701-F	1/1	NA	12200	Yes	NA	NA NA	NA NA	No	NUT
	Miscellaneous Parameters															
	HARDNESS	170		170		MG/L	02SW0701	1/1	NA	NA	NA	NA	NA	NA	No	NTX
	TOTAL ORGANIC CARBON	3.7		3.7		MG/L	02SW0701	1/1	NA	NA	NA	NA	NA	NA	No	NTX
	TOTAL SUSPENDED SOLIDS	13	J	13	J	MG/L	02SW0701	1/1	NA	NA	NA	NA	NA	NA	No	NTX

Notes:
(1) - Only the original of duplicate samples was considered for COPC selection. The duplicate was used for quality control purposes only.
(2) - Values presented are sample-specific quantitation limits.
(3) - The maximum detected concentration is used for screening purposes.
(4) - To determine whether metal concentrations were within background levels, surface water concentrations were statistically compared to concentrations in upgradient surface water samples. If the site surface water concentrations were less than the upgradient concentrations, that metal was not selected as a COPC. See Section 4.
(5) - U.S. EPA Region 9 Preliminary Remediation Goals Table, November 1, 2000. (Cancer benchmark value = 1E-06, HI = 0.1).
(6) - Rationale Codes
Selection Reason: Above Screening Levels (ASL)
No Toxicity Information (NTX)
Deletion Reason: Essential Nutrient (NUT)
Below Screening Level (BSL)
Below Background Value (BKG)

Shaded cells indicate that the specified criterion has been exceeded or that the chemical has been selected as a COPC.

Associated Samples
02SW0701
02SW0701-F

Definitions:
NA = Not Applicable.
SQL = Sample Quantitation Limit.
COPC = Chemical of Potential Concern.
ARAR/TBC = Applicable or Relevant and Appropriate Requirement/To Be Considered
J = Estimated Value.
C = Carcinogenic.
N = Non-Carcinogenic.
FED-MCL = Federal Maximum Contaminant Level (U.S. EPA, Summer 2000).
FED-SMCL = Federal Secondary Maximum Contaminant Level based on aesthetic water quality (U.S. EPA, Summer 2000).
IDEM = Indiana Department of Environmental Management, Risk Integrated System of Closure (RISC) residential closure levels for groundwater (IDEM, July 2001)

TABLE 2.8
OCCURRENCE, DISTRIBUTION AND SELECTION OF CHEMICALS OF POTENTIAL CONCERN
NSWC CRANE
CRANE, INDIANA

Scenario Timeframe: Current/Future
Medium: Sediment
Exposure Medium: Sediment
Exposure Point: SWMU 2 - Dye Burial Ground

CAS Number	Chemical	Minimum Concentration (1)	Minimum Qualifier	Maximum Concentration (1)	Maximum Qualifier	Units	Location of Maximum Concentration	Detection Frequency	Range of Nondetects(2)	Concentration Used for Screening(3)	Site Above Background? (4)	EPA Region 9 PRG-Residential (5)	Potential ARAR/TBC Value	Potential ARAR/TBC Source	COPC Flag	Rationale for Contaminant Deletion or Selection(6)
	Inorganics															
7429-90-5	ALUMINUM	4580		10300		MG/KG	02SD010006	7/7	NA	10300	No	7600 N	NA	NA	No	BKG
7440-36-0	ANTIMONY	0.74		0.74		MG/KG	02SD030006, 02SD010006	2/7	0.48 - 0.69	0.74	No	3.1 N	140	IDEM	No	BSL, BKG
7440-38-2	ARSENIC	5.6		11	J	MG/KG	02SD010006	7/7	NA	11	No	0.39 C	3.9	IDEM	No	BKG
7440-39-3	BARIUM	87.6		169		MG/KG	02SD040006	7/7	NA	169	Yes	540 N	23000	IDEM	No	BSL
7440-41-7	BERYLLIUM	0.54		1.2		MG/KG	02SD010006	2/7	2.3 - 3.4	1.2	No	15 N	680	IDEM	No	BSL, BKG
7440-43-9	CADMIUM	0.55		0.69		MG/KG	02SD040006	4/7	0.46 - 0.52	0.69	No	3.7 N	12	IDEM	No	BSL, BKG
7440-70-2	CALCIUM	873		2550		MG/KG	02SD070006	7/7	NA	2550	No	NA	NA	NA	No	NUT, BKG
7440-47-3	CHROMIUM	11.3		30		MG/KG	02SD050006	7/7	NA	30	No	30 (7) C	430 (7)	IDEM	No	BSL, BKG
7440-48-4	COBALT	8.4		29.5		MG/KG	02SD050006	7/7	NA	29.5	No	470 N	NA	NA	No	BSL, BKG
7440-50-8	COPPER	8.4		9.6		MG/KG	02SD070006	7/7	NA	9.6	No	290 N	13000	IDEM	No	BSL, BKG
7439-89-6	IRON	14200		38700		MG/KG	02SD050006	7/7	NA	38700	No	2300 N	NA	NA	No	BKG
7439-92-1	LEAD	17.6		33.4		MG/KG	02SD010006	7/7	NA	33.4	No	400	400	IDEM	No	BSL, BKG
7439-95-4	MAGNESIUM	760		1120		MG/KG	02SD020006	7/7	NA	1120	No	NA	NA	NA	No	NUT, BKG
7439-96-5	MANGANESE	631		3200		MG/KG	02SD010006	7/7	NA	3200	Yes	180 N	NA	NA	Yes	ASL
7439-97-6	MERCURY	0.04		0.06	J	MG/KG	02SD020006	6/7	0.03	0.06	No	2.3 N	55	IDEM	No	BSL, BKG
7440-02-0	NICKEL	7.9		41.8		MG/KG	02SD040006	7/7	NA	41.8	No	160 N	6900	IDEM	No	BSL, BKG
7440-09-7	POTASSIUM	511		830		MG/KG	02SD070006	5/7	460 - 688	830	No	NA	NA	NA	No	NUT, BKG
7782-49-2	SELENIUM	0.5	J	0.65	J	MG/KG	02SD020006	3/7	0.46 - 0.69	0.65	No	39 N	1700	IDEM	No	BSL, BKG
7440-62-2	VANADIUM	14.9	-	37.7		MG/KG	02SD050006	7/7	NA	37.7	No	55 N	NA	NA	No	BSL, BKG
7440-66-6	ZINC	30	J	47.1		MG/KG	02SD070006	7/7	NA	47.1	No	2300 N	100000	IDEM	No	BSL, BKG

Notes:
(1) - Only the original of duplicate samples was considered for COPC selection. The duplicate was used for quality control purposes only.
(2) - Values presented are sample-specific quantitation limits.
(3) - The maximum detected concentration is used for screening purposes.
(4) - To determine whether metal concentrations were within background levels, sediment concentrations were statistically compared to concentrations in upgradient sediment samples. If the site sediment concentrations were less than the upgradient concentrations, that metal was not selected as a COPC. See Section 4.
(5) - U.S. EPA Region 9 Preliminary Remediation Goals Table, November 1, 2000. (Cancer benchmark value = 1E-06, HI = 0.1).
(6) - Rationale Codes
Selection Reason: Above Screening Levels (ASL)
No Toxicity Information (NTX)
Deletion Reason: Essential Nutrient (NUT)
Below Screening Level (BSL)
Below Background Value (BKG)
(7) - Value is for hexavalent chromium.
Shaded cells indicate that the specified criterion has been exceeded or that the chemical has been selected as a COPC.

Definitions:
NA = Not Applicable.
SQL = Sample Quantitation Limit.
COPC = Chemical of Potential Concern.
ARAR/TBC = Applicable or Relevant and Appropriate Requirement/To Be Considered.
J = Estimated Value.
C = Carcinogenic.
N = Noncarcinogenic.
IDEM = Indiana Department of Environmental Management, Risk Integrated System of Closure (RISC) residential levels for direct contact with soil (IDEM, July 2001).

Associated Samples
02SD010006
02SD020006
02SD030006
02SD040006
02SD050006
02SD060006
02SD070006

TABLE 3.1
MEDIUM-SPECIFIC EXPOSURE POINT CONCENTRATION SUMMARY
NSWC CRANE
CRANE, INDIANA

Scenario Timeframe: Current/Future
Medium: Surface/Subsurface Soil
Exposure Medium: Surface/Subsurface Soil
Exposure Point: SWMU 2 - Dye Burial Ground

Chemical of Potential Concern	Units	Arithmetic Mean	95% UCL of Normal Data	Maximum Detected Concentration	Maximum Qualifier	EPC Units	Reasonable Maximum Exposure			Central Tendency Exposure		
							Medium EPC Value	Medium EPC Statistic	Medium EPC Rationale	Medium EPC Value	Medium EPC Statistic	Medium EPC Rationale
Aluminum	mg/kg	4676	5857	11300		mg/kg	6588	95% UCL-L	W - Test (1)	6588	95% UCL-L	W - Test (1)
Arsenic	mg/kg	1.52	2.17	7.5	J	mg/kg	2.91	95% UCL-L	W - Test (1)	2.91	95% UCL-L	W - Test (1)
Iron	mg/kg	11765	14438	24100		mg/kg	14438	95% UCL-N	W - Test (2)	14438	95% UCL-N	W - Test (2)

Notes:
For non-detects, 1/2 sample quantitation limit was used as a proxy concentration; for duplicate sample results, only the original of duplicate samples was considered for COPC selection. The duplicate was used for quality control purposes only.
W - Test: Developed by Shapiro and Wilk, refer to Supplemental Guidance to RAGS: Calculating the Concentration Term, OSWER Directive 9285.7-081, May 1992.
Statistics: Maximum Detected Value (Max); 95% UCL of Normal Data (95% UCL-N); 95% UCL of Log-transformed Data (95% UCL-L); Mean of Normal Data (Mean-N).
(1) - Shapiro-Wilk W Test indicates that data is lognormally distributed.
(2) - Shapiro-Wilk W Test indicates that data is normally distributed.

TABLE 3.2
MEDIUM-SPECIFIC EXPOSURE POINT CONCENTRATION SUMMARY
NSWC CRANE
CRANE, INDIANA

Scenario Timeframe: Current/Future
Medium: Ground Water
Exposure Medium: Lower Pennsylvanian Aquifer
Exposure Point: SWMU 2 - Dye Burial Ground

Chemical of Potential Concern	Units	Arithmetic Mean	95% UCL of Normal Data	Maximum Detected Concentration	Maximum Qualifier	EPC Units	Reasonable Maximum Exposure			Central Tendency Exposure		
							Medium EPC Value	Medium EPC Statistic	Medium EPC Rationale	Medium EPC Value	Medium EPC Statistic	Medium EPC Rationale
Aluminum	ug/L	5900	(1)	23300		ug/L	23300	Max	(1)	23300	Max	(1)
Arsenic	ug/L	1.19	(1)	1.6		ug/L	1.6	Max	(1)	1.6	Max	(1)
Beryllium	ug/L	1.55	(1)	4.7		ug/L	4.7	Max	(1)	4.7	Max	(1)
Cadmium	ug/L	4.60	(1)	16.1		ug/L	16.1	Max	(1)	16.1	Max	(1)
Cobalt	ug/L	114	(1)	445		ug/L	445	Max	(1)	445	Max	(1)
Nickel	ug/L	255	(1)	868		ug/L	868	Max	(1)	868	Max	(1)
Zinc	ug/L	598	(1)	2280	J	ug/L	2280	Max	(1)	2280	Max	(1)

Notes:
For non-detects, 1/2 sample quantitation limit was used as a proxy concentration; for duplicate sample results, only the original of duplicate samples was considered for COPC selection. The duplicate was used for quality control purposes only.
(1) - There were less than 10 groundwater samples consequently the maximum detected concentration was used as the exposure point concentration.

TABLE 3.3
MEDIUM-SPECIFIC EXPOSURE POINT CONCENTRATION SUMMARY
NSWC CRANE
CRANE, INDIANA

Scenario Timeframe: Current/Future
Medium: Surface Water
Exposure Medium: Surface Water
Exposure Point: SWMU 2 - Dye Burial Ground

Chemical of Potential Concern	Units	Arithmetic Mean	95% UCL of Normal Data	Maximum Detected Concentration	Maximum Qualifier	EPC Units	Reasonable Maximum Exposure			Central Tendency Exposure		
							Medium EPC Value	Medium EPC Statistic	Medium EPC Rationale	Medium EPC Value	Medium EPC Statistic	Medium EPC Rationale
Aluminum	ug/L	(1)	(1)	523		ug/L	523	Max	(1)	523	Max	(1)
Arsenic	ug/L	(1)	(1)	0.41		ug/L	0.41	Max	(1)	0.41	Max	(1)
Iron	ug/L	(1)	(1)	874	J	ug/L	874	Max	(1)	874	Max	(1)

Notes:
For non-detects, 1/2 sample quantitation limit was used as a proxy concentration; for duplicate sample results, only the original of duplicate samples was considered for COPC selection. The duplicate was used for quality control purposes only.
(1) - There were less than 10 groundwater samples consequently the maximum detected concentration was used as the exposure point concentration.

TABLE 3.4
MEDIUM-SPECIFIC EXPOSURE POINT CONCENTRATION SUMMARY
NSWC CRANE
CRANE, INDIANA

Scenario Timeframe: Current/Future
Medium: Sediment
Exposure Medium: Sediment
Exposure Point: SWMU 2 - Dye Burial Ground

Chemical of Potential Concern	Units	Arithmetic Mean	95% UCL of Normal Data	Maximum Detected Concentration	Maximum Qualifier	EPC Units	Reasonable Maximum Exposure			Central Tendency Exposure		
							Medium EPC Value	Medium EPC Statistic	Medium EPC Rationale	Medium EPC Value	Medium EPC Statistic	Medium EPC Rationale
Manganese	mg/kg	1839	(1)	3200		407	3200	Max	(1)	3200	Max	(1)

Notes:
For non-detects, 1/2 sample quantitation limit was used as a proxy concentration; for duplicate sample results, only the original of duplicate samples was considered for COPC selection. The duplicate was used for quality control purposes only.
(1) - There were less than 10 sediment samples consequently the maximum detected concentration was used as the exposure point concentration.

TABLE 4.1

VALUES USED FOR DAILY INTAKE CALCULATIONS

NSWC CRANE

CRANE, INDIANA

Scenario Timeframe: Current/Future
Medium: Surface/Subsurface Soil
Exposure Medium: Surface/Subsurface Soil
Exposure Point: SWMU 2 - Dye Burial Ground
Receptor Population: Construction Workers
Receptor Age: Adult

Exposure Route	Parameter Code	Parameter Definition	Units	RME Value	RME Rationale/ Reference	CT Value	CT Rationale/ Reference	Intake Equation/ Model Name
Ingestion	CS	Chemical concentration in soil	mg/kg	Max or 95% UCL	EPA, 1992	Max or 95% UCL	EPA, 1992	Intake (mg/kg/day) =
	IR-S	Ingestion Rate	mg/day	480	EPA, 1991	240	EPA, 1991	$\frac{Cs \times IRS \times CF3 \times FI \times EF \times ED}{BW \times AT}$
	CF3	Conversion Factor 3	kg/mg	1.0E-06	--	1.0E-06	--	
	FI	Fraction Ingested	unitless	1	EPA, 1991	1	EPA, 1991	
	EF	Exposure Frequency	days/year	10	(1)	10	(1)	
	ED	Exposure Duration	years	1	(2)	1	(2)	
	BW	Body Weight	kg	70	EPA, 1993	70	EPA, 1993	
	AT-C	Averaging Time (Cancer)	days	25,550	EPA, 1989	25,550	EPA, 1989	
	AT-N	Averaging Time (Non-Cancer)	days	365	EPA, 1989	365	EPA, 1989	
Dermal	CS	Chemical concentration in soil	mg/kg	Max or 95% UCL	EPA, 1992	Max or 95% UCL	EPA, 1992	Dermally Absorbed Dose (mg/kg/day) =
	CF3	Conversion Factor 3	kg/mg	1.0E-06	--	1.0E-06	--	$\frac{Cs \times CF3 \times SA \times SSAF \times DABS \times EF \times ED}{BW \times AT}$
	SA	Skin Surface Available for Contact	cm2	3,300	EPA, 2001	3,300	EPA, 2001	
	SSAF	Soil to Skin Adherence Factor	mg/cm2/event	0.3	EPA, 2001	0.1	EPA, 2001	
	DABS	Absorption Factor	unitless	Chemical Specific	EPA, 1997	Chemical Specific	EPA, 1997	
	EF	Exposure Frequency	days/year	10	(1)	10	(1)	
	ED	Exposure Duration	years	1	(2)	1	(2)	
	BW	Body Weight	kg	70	EPA, 1993	70	EPA, 1993	
	AT-C	Averaging Time (Cancer)	days	25,550	EPA, 1989	25,550	EPA, 1989	
	AT-N	Averaging Time (Non-Cancer)	days	365	EPA, 1989	365	EPA, 1989	

Notes:

1 - Assume short term, relatively un-intrusive activities are anticipated; a 2 week 5 days/week project.

2 - Assume a one year construction scenario.

Sources:

EPA, 1989: Risk Assessment Guidance for Superfund. Vol 1: Human Health Evaluation Manual, Part A.

EPA, 1991: Human Health Evaluation Manual, Supplemental Guidance: Standard Default Exposure Factors. OSWER Directive 9285.6-03.

EPA, 1992: Supplemental Guidance to RAGS: Calculating the Concentration Term. PB92-963373.

EPA, 1993: Superfund's Standard Default Exposure Factors for the Central Tendency and Reasonable Maximum Exposure.

EPA, 1997: Exposure Factors Handbook. EPA/600/8-95/002FA.

EPA, 2001: Risk Assessment Guidance for Superfund (Part E, Supplemental Guidance for Dermal Risk Assessment) Interim. EPA/540/R/99/005.

TABLE 4.2

VALUES USED FOR DAILY INTAKE CALCULATIONS

NSWC CRANE

CRANE, INDIANA

Scenario Timeframe: Current/Future
Medium: Surface Water
Exposure Medium: Surface Water
Exposure Point: SWMU 2 - Dye Burial Ground
Receptor Population: Trespasser
Receptor Age: Adolescent

Exposure Route	Parameter Code	Parameter Definition	Units	RME Value	RME Rationale/ Reference	CT Value	CT Rationale/ Reference	Intake Equation/ Model Name
Ingestion	CW	Chemical Concentration in Water	mg/L	Max or 95% UCL	EPA, 1992	Max or 95% UCL	EPA, 1992	Intake (mg/kg/day) =
	CR	Contact Rate	ml/hr	0.01	EPA IV, 1995	0.01	EPA IV, 1995	$\frac{CW \times CR \times CF \times ET \times EF \times ED}{BW \times AT}$
	CF	Conversion factor	ug/mg	0.001	- -	0.001	- -	
	ET	Exposure Time	hours/event	4	(1)	2	(1)	
	EF	Exposure Frequency	events/year	52	(2)	26	(2)	
	ED	Exposure Duration	years	11	(3)	11	(3)	
	BW	Body Weight	kg	43	EPA, 1997	43	EPA, 1997	
	AT-C	Averaging Time (Cancer)	days	25,550	EPA, 1989	25,550	EPA, 1989	
	AT-N	Averaging Time (Non-Cancer)	days	4,015	EPA, 1989	4,015	EPA, 1989	
Dermal	DAevent	Absorbed dose per event	mg/cm2-event	Calculated	EPA, 2001	Calculated	EPA, 2001	Dermally Absorbed Dose (mg/kg/day)
	SA	Skin Surface Available for Contact	cm2	3,280	(4)	3,100	(4)	$= \frac{DAevent \times EV \times EF \times ED \times SA}{BW \times AT}$
	EV	Event Frequency	events/day	1	(1)	1	(1)	
	ET	Exposure Time	hours/event	4	(1)	2	(1)	
	EF	Exposure Frequency	days/year	52	(2)	26	(2)	
	ED	Exposure Duration	years	11	(3)	11	(3)	
	BW	Body Weight	kg	43	EPA, 1997	43	EPA, 1997	
	AT-C	Averaging Time (Cancer)	days	25,550	EPA, 1989	25,550	EPA, 1989	
	AT-N	Averaging Time (Non-Cancer)	days	4,015	EPA, 1989	4,015	EPA, 1989	

Notes:

1 - Professional judgment.

2 - Assume one day a week for RME and one day every other week for CTE.

3 - Adolescents from age 6 to 17.

4 - Assumes that 25 percent of the total body surface area is exposed (EPA, 1997).

Sources:

EPA, 1989: Risk Assessment Guidance for Superfund. Vol 1: Human Health Evaluation Manual, Part A. EPA/540/1-86/060.

EPA, 1992: Supplemental Guidance to RAGS: Calculating the Concentration Term. PB92-963373.

EPA, 1993: Superfund's Standard Default Exposure Factors for the Central Tendency and Reasonable Maximum Exposure.

EPA Region IV, 1995: Supplement Guidance to RAGS: Region 4 Bulletins.

EPA, 1997: Exposure Factors Handbook. EPA/600/8-95/002FA.

EPA, 2001: Risk Assessment Guidance for Superfund (Part E, Supplemental Guidance for Dermal Risk Assessment) Interim. EPA/540/R/99/005.

TABLE 4.3

VALUES USED FOR DAILY INTAKE CALCULATIONS

NSWC CRANE

CRANE, INDIANA

Scenario Timeframe: Current/Future
Medium: Sediment
Exposure Medium: Sediment
Exposure Point: SWMU 2 - Dye Burial Ground
Receptor Population: Trespasser
Receptor Age: Adolescent

Exposure Route	Parameter Code	Parameter Definition	Units	RME Value	RME Rationale/ Reference	CT Value	CT Rationale/ Reference	Intake Equation/ Model Name
Ingestion	CS	Chemical concentration in sediment	mg/kg	Max or 95% UCL	EPA, 1992	Max or 95% UCL	EPA, 1992	Intake (mg/kg/day) =
	IR-S	Ingestion Rate	mg/day	100	EPA, 1993	50	EPA, 1993	$\frac{Cs \times IRS \times CF3 \times FI \times EF \times ED}{BW \times AT}$
	CF3	Conversion Factor 3	kg/mg	1.0E-06	--	1.0E-06	--	
	FI	Fraction Ingested	unitless	1	EPA, 1993	1	EPA, 1993	
	EF	Exposure Frequency	days/year	52	(1)	26	(1)	
	ED	Exposure Duration	years	11	(2)	11	(2)	
	BW	Body Weight	kg	43	EPA, 1989	43	EPA, 1989	
	AT-C	Averaging Time (Cancer)	days	25,550	EPA, 1989	25,550	EPA, 1989	
	AT-N	Averaging Time (Non-Cancer)	days	4,015	EPA, 1989	4,015	EPA, 1989	
Dermal	CS	Chemical concentration in sediment	mg/kg	Max or 95% UCL	EPA, 1992	Max or 95% UCL	EPA, 1992	Dermally Absorbed Dose (mg/kg/day) =
	CF3	Conversion Factor 3	kg/mg	1.0E-06	--	1.0E-06	--	$\frac{Cs \times CF3 \times SA \times SSAF \times DABS \times EF \times ED}{BW \times AT}$
	SA	Skin Surface Available for Contact	cm2	3,280	(3)	3,100	(3)	
	SSAF	Soil to Skin Adherence Factor	mg/cm2/event	0.2	EPA, 2001	0.04	EPA, 2001	
	DABS	Absorption Factor	unitless	Chemical Specific	EPA, 1997	Chemical Specific	EPA, 1997	
	EF	Exposure Frequency	days/year	52	(1)	26	(1)	
	ED	Exposure Duration	years	11	(2)	11	(2)	
	BW	Body Weight	kg	43	EPA, 1989	43	EPA, 1989	
	AT-C	Averaging Time (Cancer)	days	25,550	EPA, 1989	25,550	EPA, 1989	
	AT-N	Averaging Time (Non-Cancer)	days	4,015	EPA, 1989	4,015	EPA, 1989	

Notes:

1 - Assume one day a week for RME and one day every other week for CTE.

2 - Adolescents from age 6 to 17.

3 - Assumes that 25 percent of the total body surface area is exposed (EPA, 1997).

Sources:

EPA, 1989: Risk Assessment Guidance for Superfund. Vol 1: Human Health Evaluation Manual, Part A. EPA/540/1-86/060.

EPA, 1992: Supplemental Guidance to RAGS: Calculating the Concentration Term. PB92-963373.

EPA, 1993: Superfund's Standard Default Exposure Factors for the Central Tendency and Reasonable Maximum Exposure.

EPA, 1997: Exposure Factors Handbook. EPA/600/8-95/002FA.

EPA, 2001: Risk Assessment Guidance for Superfund (Part E, Supplemental Guidance for Dermal Risk Assessment) Interim. EPA/540/R/99/005.

TABLE 4.4

VALUES USED FOR DAILY INTAKE CALCULATIONS

NSWC CRANE

CRANE, INDIANA

Scenario Timeframe: Future
Medium: Surface Water
Exposure Medium: Surface Water
Exposure Point: SWMU 2 - Dye Burial Ground
Receptor Population: Recreational Users
Receptor Age: Adult

Exposure Route	Parameter Code	Parameter Definition	Units	RME Value	RME Rationale/ Reference	CT Value	CT Rationale/ Reference	Intake Equation/ Model Name
Ingestion	CW	Chemical Concentration in Water	mg/L	Max or 95% UCL	EPA, 1992	Max or 95% UCL	EPA, 1992	Intake (mg/kg/day) =
	CR	Contact Rate	ml/hr	0.05	EPA IV, 1995	0.05	EPA IV, 1995	$\frac{CW \times CR \times CF \times ET \times EF \times ED}{BW \times AT}$
	CF	Conversion factor	ug/mg	0.001	- -	0.001	- -	
	ET	Exposure Time	hours/event	1	(1)	1	(1)	
	EF	Exposure Frequency	events/year	52	(2)	26	(2)	
	ED	Exposure Duration	years	30	EPA, 1993	9	EPA, 1993	
	BW	Body Weight	kg	70	EPA, 1993	70	EPA, 1993	
	AT-C	Averaging Time (Cancer)	days	25,550	EPA, 1989	25,550	EPA, 1989	
	AT-N	Averaging Time (Non-Cancer)	days	10,950	EPA, 1989	3,285	EPA, 1989	
Dermal	DAevent	Absorbed dose per event	mg/cm2-event	Calculated	EPA, 2001	Calculated	EPA, 2001	Dermally Absorbed Dose (mg/kg/day) =
	SA	Skin Surface Available for Contact	cm2	9,070	(3)	9,070	(3)	$= \frac{DAevent \times EV \times EF \times ED \times SA}{BW \times AT}$
	EV	Event Frequency	events/day	1	(1)	1	(1)	
	ET	Exposure Time	hours/event	1	(1)	1	(1)	
	EF	Exposure Frequency	days/year	52	(2)	26	(2)	
	ED	Exposure Duration	years	30	EPA, 1993	9	EPA, 1993	See text for calculation of DAevent.
	BW	Body Weight	kg	70	EPA, 1993	70	EPA, 1993	
	AT-C	Averaging Time (Cancer)	days	25,550	EPA, 1989	25,550	EPA, 1989	
	AT-N	Averaging Time (Non-Cancer)	days	10,950	EPA, 1989	3,285	EPA, 1989	

Notes:

1 - Assume one day a week for RME and one day every other week for CTE.

2 - Assumed head, arms, hands, lower legs, and feet are exposed. EPA, 1997.

Sources:

EPA, 1989: Risk Assessment Guidance for Superfund. Vol 1: Human Health Evaluation Manual, Part A. EPA/540/1-86/060.

EPA, 1992:Supplemental Guidance to RAGS: Calculating the Concentration Term. PB92-963373.

EPA, 1993: Superfund Standard Default Exposure Factors for the Central Tendency and Reasonable Maximum Exposure.

EPA Region IV, 1995: Supplement Guidance to RAGS: Region 4 Bulletins.

EPA, 1997: Exposure Factors Handbook. EPA/600/P-95/002Fa.

EPA, 2001: Risk Assessment Guidance for Superfund (Part E, Supplemental Guidance for Dermal Risk Assessment) Interim. EPA/540/R/99/005.

TABLE 4.5

VALUES USED FOR DAILY INTAKE CALCULATIONS

NSWC CRANE

CRANE, INDIANA

Scenario Timeframe: Future
Medium: Sediment
Exposure Medium: Sediment
Exposure Point: SWMU 2 - Dye Burial Ground
Receptor Population: Recreational Users
Receptor Age: Adult

Exposure Route	Parameter Code	Parameter Definition	Units	RME Value	RME Rationale/ Reference	CT Value	CT Rationale/ Reference	Intake Equation/ Model Name
Ingestion	CS	Chemical concentration in sediment	mg/kg	Max or 95% UCL	EPA, 1992	Max or 95% UCL	EPA, 1992	Intake (mg/kg/day) =
	IR-S	Ingestion Rate	mg/day	100	EPA, 1993	50	EPA, 1993	$\frac{Cs \times IRS \times CF3 \times FI \times EF \times ED}{BW \times AT}$
	CF3	Conversion Factor 3	kg/mg	1.0E-06	--	1.0E-06	--	
	FI	Fraction Ingested	unitless	1	EPA, 1993	1	EPA, 1993	
	EF	Exposure Frequency	days/year	52	(1)	26	(1)	
	ED	Exposure Duration	years	30	EPA, 1991	9	EPA, 1993	
	BW	Body Weight	kg	70	EPA, 1989	70	EPA, 1989	
	AT-C	Averaging Time (Cancer)	days	25,550	EPA, 1989	25,550	EPA, 1989	
	AT-N	Averaging Time (Non-Cancer)	days	10,950	EPA, 1989	3,285	EPA, 1989	
Dermal	CS	Chemical concentration in sediment	mg/kg	Max or 95% UCL	EPA, 1992	Max or 95% UCL	EPA, 1992	Dermally Absorbed Dose (mg/kg/day) =
	CF3	Conversion Factor 3	kg/mg	1.0E-06	--	1.0E-06	--	$\frac{Cs \times CF3 \times SA \times SSAF \times DABS \times EF \times ED}{BW \times AT}$
	SA	Skin Surface Available for Contact	cm2	9,070	(2)	9,070	(2)	
	SSAF	Soil to Skin Adherence Factor	mg/cm2/event	0.07	EPA, 2001	0.01	EPA, 2001	
	DABS	Absorption Factor	unitless	Chemical Specific	EPA, 1997	Chemical Specific	EPA, 1997	
	EF	Exposure Frequency	days/year	52	(1)	26	(1)	
	ED	Exposure Duration	years	30	EPA, 1993	9	EPA, 1993	
	BW	Body Weight	kg	70	EPA, 1993	70	EPA, 1993	
	AT-C	Averaging Time (Cancer)	days	25,550	EPA, 1989	25,550	EPA, 1989	
	AT-N	Averaging Time (Non-Cancer)	days	10,950	EPA, 1989	3,285	EPA, 1989	

Notes:

1 - Assume one day a week for RME and one day every other week for CTE.

2 - Assumed head, arms, hands, lower legs, and feet are exposed. EPA, 1997.

Sources:

EPA, 1989: Risk Assessment Guidance for Superfund. Vol 1: Human Health Evaluation Manual, Part A. EPA/540/1-86/060.

EPA, 1991: Risk Assessment Guidance for Superfund - Supplemental Guidance- Standard Default Exposure Factors Interim Final.

EPA, 1992: Supplemental Guidance to RAGS: Calculating the Concentration Term. PB92-963373.

EPA, 1993: Superfund Standard Default Exposure Factors for the Central Tendency and Reasonable Maximum Exposure.

EPA, 1997: Exposure Factors Handbook. EPA/600/P-95/002Fa.

EPA, 2001: Risk Assessment Guidance for Superfund (Part E, Supplemental Guidance for Dermal Risk Assessment) Interim. EPA/540/R/99/005.

TABLE 4.6

VALUES USED FOR DAILY INTAKE CALCULATIONS

NSWC CRANE

CRANE, INDIANA

Scenario Timeframe: Future
Medium: Groundwater
Exposure Medium: Ground Water
Exposure Point: SWMU 2 - Dye Burial Ground
Receptor Population: Resident
Receptor Age: Child

Exposure Route	Parameter Code	Parameter Definition	Units	RME Value	RME Rationale/ Reference	CTE Value	CTE Rationale/ Reference	Intake Equation/ Model Name
Ingestion	CGW	Chemical Concentration in ground water	ug/L	Max or 95% UCL	EPA, 1992	Max or 95% UCL	EPA, 1992	Chronic Daily Intake (CDI) (mg/kg/day) =
	CF	Conversion Factor	mg/ug	0.001	--	0.001	--	
	IR-GW	Ingestion Rate of Groundwater	L/day	1.5	EPA, 1997	0.66	EPA, 1997	$\frac{CW \times CF \times IRGW \times EF \times ED}{BW \times AT}$
	EF	Exposure Frequency	days/year	350	EPA, 1993	234	EPA, 1993	
	ED	Exposure Duration	years	6	EPA, 1993	2	EPA, 1993	
	BW	Body Weight	kg	15	EPA, 1993	15	EPA, 1993	
	AT-C	Averaging Time (Cancer)	days	25,550	EPA, 1989	25,550	EPA, 1989	
	AT-N	Averaging Time (Non-Cancer)	days	2,190	EPA, 1989	730	EPA, 1989	
Dermal	Daevent	Dermally Absorbed Dose per Event	mg/cm2-event	Calculated	EPA, 2001	Calculated	EPA, 2001	Dermally Absorbed Dose (mg/kg/day)
	SA	Skin Surface Available for Contact	cm2	6,600	EPA, 2001	6,600	EPA, 2001	
	EV	Event Frequency	events/day	1	EPA, 1992	1	EPA, 1992	$= \frac{DAevent \times EV \times EF \times ED \times SA}{BW \times AT}$
	ET	Exposure Time	hours/day	0.25	EPA, 1997	0.167	EPA, 1997	
	EF	Exposure Frequency	days/year	350	EPA, 1993	234	EPA, 1993	
	ED	Exposure Duration	years	6	EPA, 1993	2	EPA, 1993	
	BW	Body Weight	kg	15	EPA, 1993	15	EPA, 1993	
	AT-C	Averaging Time (Cancer)	days	25,550	EPA, 1989	25,550	EPA, 1989	
	AT-N	Averaging Time (Non-Cancer)	days	2,190	EPA, 1989	730	EPA, 1989	

Sources:

EPA, 1989: Risk Assessment Guidance for Superfund. Vol 1: Human Health Evaluation Manual, Part A. EPA/540/1-86/060.

EPA, 1992: Supplemental Guidance to RAGS: Calculating the Concentration Term. PB92-963373.

EPA, 1993: Superfund Standard Default Exposure Factors for the Central Tendency and Reasonable Maximum Exposure.

EPA, 1997: Exposure Factors Handbook. EPA/600/P-95/002Fa

EPA, 2001: Risk Assessment Guidance for Superfund (Part E, Supplemental Guidance for Dermal Risk Assessment) Interim. EPA/540/R/99/005.

TABLE 4.7

VALUES USED FOR DAILY INTAKE CALCULATIONS

NSWC CRANE

CRANE, INDIANA

Scenario Timeframe: Future
Medium: Groundwater
Exposure Medium: Ground Water
Exposure Point: SWMU 2 - Dye Burial Ground
Receptor Population: Resident
Receptor Age: Adult

Exposure Route	Parameter Code	Parameter Definition	Units	RME Value	RME Rationale/ Reference	CTE Value	CTE Rationale/ Reference	Intake Equation/ Model Name
Ingestion	CGW	Chemical Concentration in ground water	ug/L	Max or 95% UCL	EPA, 1992	Max or 95% UCL	EPA, 1992	Chronic Daily Intake (CDI) (mg/kg/day) =
	CF	Conversion Factor	mg/ug	0.001	--	0.001	--	
	IR-GW	Ingestion Rate of Groundwater	L/day	2	EPA, 1993	1.4	EPA, 1993	$\frac{CW \times CF \times IRGW \times EF \times ED}{BW \times AT}$
	EF	Exposure Frequency	days/year	350	EPA, 1993	234	EPA, 1993	
	ED	Exposure Duration	years	24	EPA, 1993	7	EPA, 1993	
	BW	Body Weight	kg	70	EPA, 1993	70	EPA, 1993	
	AT-C	Averaging Time (Cancer)	days	25,550	EPA, 1989	25,550	EPA, 1989	
	AT-N	Averaging Time (Non-Cancer)	days	8,760	EPA, 1989	2,555	EPA, 1989	
Dermal	Daevent	Dermally Absorbed Dose per Event	mg/cm2-event	Calculated	EPA, 2001	Calculated	EPA, 2001	Dermally Absorbed Dose (mg/kg/day)
	SA	Skin Surface Available for Contact	cm2	18,000	EPA, 2001	18,000	EPA, 2001	
	EV	Event Frequency	events/day	1	EPA, 1992	1	EPA, 1992	$= \frac{DAevent \times EV \times EF \times ED \times SA}{BW \times AT}$
	ET	Exposure Time	hours/day	0.25	EPA, 1997	0.167	EPA, 1997	
	EF	Exposure Frequency	days/year	350	EPA, 1993	234	EPA, 1993	
	ED	Exposure Duration	years	24	EPA, 1993	7	EPA, 1993	DAevent calculated according to EPA, 1998.
	BW	Body Weight	kg	70	EPA, 1993	70	EPA, 1993	
	AT-C	Averaging Time (Cancer)	days	25,550	EPA, 1989	25,550	EPA, 1989	
	AT-N	Averaging Time (Non-Cancer)	days	8,760	EPA, 1989	2,555	EPA, 1989	

Sources:

EPA, 1989: Risk Assessment Guidance for Superfund. Vol 1: Human Health Evaluation Manual, Part A. EPA/540/1-86/060.

EPA, 1992: Supplemental Guidance to RAGS: Calculating the Concentration Term. PB92-963373.

EPA, 1993: Superfund Standard Default Exposure Factors for the Central Tendency and Reasonable Maximum Exposure.

EPA, 1997: Exposure Factors Handbook. EPA/600/P-95/002Fa

TABLE 5.1
NON-CANCER TOXICITY DATA -- ORAL/DERMAL
SWMU 2 - DYE BURIAL GROUND
NSWC CRANE
CRANE, INDIANA

Chemical of Potential Concern	Chronic/ Subchronic	Oral RfD Value	Oral RfD Units	Oral to Dermal Adjustment Factor (1)	Adjusted Dermal RfD (2)	Units	Primary Target Organ	Combined Uncertainty/Modifying Factors	Sources of RfD: Target Organ	Dates of RfD: Target Organ (3) (MM/DD/YY)
Inorganics										
Aluminum	Chronic	1.0E+00	mg/kg/day	100%	1.0E+00	mg/kg/day	Immunological, Nails	NA	NCEA	9/25/01
Arsenic	Chronic	3.0E-04	mg/kg/day	100%	3.0E-04	mg/kg/day	Skin, CVS	3/1	IRIS	03/27/02
Beryllium	Chronic	2.0E-03	mg/kg/day	0.7%	1.4E-05	mg/kg/day	GS	300/1	IRIS	03/27/02
Cadmium	Chronic	5.0E-04	mg/kg/day	5%	2.5E-05	mg/kg/day	Kidney	10/1	IRIS	03/27/02
Cobalt	Chronic	2.0E-02	mg/kg/day	1%	2.0E-04	mg/kg/day	CVS, Immune	NA	NCEA	10/01/02
Iron	Chronic	6.0E-01	mg/kg/day	100%	6.0E-01	mg/kg/day	Liver, Blood, GS	NA	NCEA	9/25/01
Manganese (Soil)	Chronic	7.2E-02	mg/kg/day	4%	2.9E-03	mg/kg/day	CNS	1/1	IRIS	03/27/02
Nickel	Chronic	2.0E-02	mg/kg/day	4%	8.0E-04	mg/kg/day	Body Weight	300/1	IRIS	03/27/02
Zinc	Chronic	3.0E-01	mg/kg/day	1%	3.0E-03	mg/kg/day	Blood	3/1	IRIS	1/29/03

Notes:
(1) - EPA, 2001: Risk Assessment Guidance for Superfund (Part E, Supplemental Guidance for Dermal Risk Assessment) Interim. EPA/540/R/99/005.
(2) - RfDdermal = RfDoral x Oral to Dermal Adjustment Factor.
(3) - Dates of IRIS, HEAST, or NCEA.

Definitions:
CNS = Central nervous system.
CVS = Cardiovascular system.
Immune = Immunological.
GS = Gastrointestinal.
NA = Not applicable.
IRIS = Integrated Risk Information System.
HEAST= Health Effects Assessment Summary Tables.
NCEA = U.S. EPA National Center for Environmental Assessment (U.S. EPA Region 3 RBC Table, September 2001).

TABLE 6.1
CANCER TOXICITY DATA -- ORAL/DERMAL
SWMU 2 - DYE BURIAL GROUND
NSWC CRANE
CRANE, INDIANA

Chemical of Potential Concern	Oral Cancer Slope Factor	Oral to Dermal Adjustment Factor (1)	Adjusted Dermal Cancer Slope Factor (2)	Units	Weight of Evidence/ Cancer Guideline Description	Source	Date (3) (MM/DD/YY)
Inorganics							
Aluminum	NA	NA	NA	NA	NA	NA	NA
Arsenic	1.5E+00	100%	1.5E+00	$(mg/kg\text{-}day)^{-1}$	A	IRIS	03/27/02
Beryllium	NA	NA	NA	NA	B1	IRIS	03/27/02
Cadmium	NA	NA	NA	NA	B1	IRIS	03/27/02
Cobalt	NA	NA	NA	NA	NA	NA	01/29/03
Iron	NA	NA	NA	NA	NA	NA	NA
Manganese	NA	NA	NA	NA	D	IRIS	03/27/02
Nickel	NA	NA	NA	NA	NA	NA	NA
Zinc	NA	NA	NA	NA	D	IRIS	01/29/03

Notes:

(1) - EPA, 2001: Risk Assessment Guidance for Superfund (Part E, Supplemental Guidance for Dermal Risk Assessment) Interim. EPA/540/R/99/005.

(2) - CSFdermal = CSForal/Oral to Dermal Adjustment Factor.

(3) - Dates of IRIS, HEAST, or NCEA.

Definitions:

IRIS = Integrated Risk Information System.

HEAST= Health Effects Assessment Summary Tables.

NA = Not Available.

EPA Group:

A - Human carcinogen.

B1 - Probable human carcinogen - indicates that limited human data are available.

B2 - Probable human carcinogen - indicates sufficient evidence in animals and inadequate or no evidence in humans .

C - Possible human carcinogen.

D - Not classifiable as a human carcinogen.

E - Evidence of noncarcinogenicity.

TABLE 7.1
CALCULATION OF NON-CANCER HAZARDS - ADULT CONSTRUCTION WORKERS CONTACT WITH SWMU 2 SOIL
REASONABLE MAXIMUM EXPOSURE
NSWC CRANE
CRANE, INDIANA

Scenario Timeframe: Current/Future
Medium: Surface/Subsurface Soil
Exposure Medium: Surface/Subsurface Soil
Exposure Point: SWMU 2 - Dye Burial Ground
Receptor Population: Construction Workers
Receptor Age: Adult

Exposure Route	Chemical of Potential Concern	Medium EPC Value	Medium EPC Units	Route EPC Value	Route EPC Units	EPC Selected for Hazard Calculation (1)	Intake (Non-Cancer)	Intake (Non-Cancer) Units	Reference Dose	Reference Dose Units	Reference Concentration	Reference Concentration Units	Hazard Quotient
Ingestion	Aluminum	6588	mg/kg	6588	mg/kg	M	1.2E-03	mg/kg-day	1.0E+00	mg/kg-day	N/A	N/A	1.2E-03
	Arsenic	2.91	mg/kg	2.91	mg/kg	M	5.5E-07	mg/kg-day	3.0E-04	mg/kg-day	N/A	N/A	1.8E-03
	Iron	14438	mg/kg	14438	mg/kg	M	2.7E-03	mg/kg-day	6.0E-01	mg/kg-day	N/A	N/A	4.5E-03
	(Total)												7.6E-03
Dermal	Aluminum	6588	mg/kg	6588	mg/kg	M	NA	mg/kg-day	1.0E+00	mg/kg-day	N/A	N/A	NA
	Arsenic	2.91	mg/kg	2.91	mg/kg	M	3.4E-08	mg/kg-day	3.0E-04	mg/kg-day	N/A	N/A	1.1E-04
	Iron	14438	mg/kg	14438	mg/kg	M	NA	mg/kg-day	6.0E-01	mg/kg-day	N/A	N/A	NA
	(Total)												1.1E-04
												Total of Routes	7.7E-03

TABLE 7.2
CALCULATION OF NON-CANCER HAZARDS - ADULT CONSTRUCTION WORKERS CONTACT WITH SWMU 2 SOIL
CENTRAL TENDENCY EXPOSURE
NSWC CRANE
CRANE, INDIANA

Scenario Timeframe: Current/Future
Medium: Surface/Subsurface Soil
Exposure Medium: Surface/Subsurface Soil
Exposure Point: SWMU 2 - Dye Burial Ground
Receptor Population: Construction Workers
Receptor Age: Adult

Exposure Route	Chemical of Potential Concern	Medium EPC Value	Medium EPC Units	Route EPC Value	Route EPC Units	EPC Selected for Hazard Calculation (1)	Intake (Non-Cancer)	Intake (Non-Cancer) Units	Reference Dose	Reference Dose Units	Reference Concentration	Reference Concentration Units	Hazard Quotient
Ingestion	Aluminum	6588	mg/kg	6588	mg/kg	M	6.2E-04	mg/kg-day	1.0E+00	mg/kg-day	N/A	N/A	6.2E-04
	Arsenic	2.91	mg/kg	2.91	mg/kg	M	2.7E-07	mg/kg-day	3.0E-04	mg/kg-day	N/A	N/A	9.1E-04
	Iron	14438	mg/kg	14438	mg/kg	M	1.4E-03	mg/kg-day	6.0E-01	mg/kg-day	N/A	N/A	2.3E-03
	(Total)												3.8E-03
Dermal	Aluminum	6588	mg/kg	6588	mg/kg	M	NA	mg/kg-day	1.0E+00	mg/kg-day	N/A	N/A	NA
	Arsenic	2.91	mg/kg	2.91	mg/kg	M	1.1E-08	mg/kg-day	3.0E-04	mg/kg-day	N/A	N/A	3.8E-05
	Iron	14438	mg/kg	14438	mg/kg	M	NA	mg/kg-day	6.0E-01	mg/kg-day	N/A	N/A	NA
	(Total)												3.8E-05
												Total of Routes	3.8E-03

TABLE 7.3
CALCULATION OF NON-CANCER HAZARDS - ADOLESCENT TRESPASSER CONTACT WITH SWMU 2 SEDIMENT
REASONABLE MAXIMUM EXPOSURE
NSWC CRANE
CRANE, INDIANA

Scenario Timeframe: Current/Future
Medium: Sediment
Exposure Medium: Sediment
Exposure Point: SWMU 2 - Dye Burial Ground
Receptor Population: Trespasser
Receptor Age: Adolescent

Exposure Route	Chemical of Potential Concern	Medium EPC Value	Medium EPC Units	Route EPC Value	Route EPC Units	EPC Selected for Hazard Calculation (1)	Intake (Non-Cancer)	Intake (Non-Cancer) Units	Reference Dose	Reference Dose Units	Reference Concentration	Reference Concentration Units	Hazard Quotient
Ingestion	Manganese	3200	mg/kg	3200	mg/kg	M	1.1E-03	mg/kg-day	7.2E-02	mg/kg-day	N/A	N/A	1.5E-02
	(Total)												1.5E-02
Dermal	Manganese	3200	mg/kg	3200	mg/kg	M	NA	mg/kg-day	2.9E-03	mg/kg-day	N/A	N/A	NA
	(Total)												--
												Total of Routes	1.5E-02

TABLE 7.4
CALCULATION OF NON-CANCER HAZARDS - ADOLESCENT TRESPASSER CONTACT WITH SWMU 2 SEDIMENT
CENTRAL TENDENCY EXPOSURE
NSWC CRANE
CRANE, INDIANA

Scenario Timeframe: Current/Future
Medium: Sediment
Exposure Medium: Sediment
Exposure Point: SWMU 2 - Dye Burial Ground
Receptor Population: Trespasser
Receptor Age: Adolescent

Exposure Route	Chemical of Potential Concern	Medium EPC Value	Medium EPC Units	Route EPC Value	Route EPC Units	EPC Selected for Hazard Calculation (1)	Intake (Non-Cancer)	Intake (Non-Cancer) Units	Reference Dose	Reference Dose Units	Reference Concentration	Reference Concentration Units	Hazard Quotient
Ingestion	Manganese	3200	mg/kg	3200	mg/kg	M	2.7E-04	mg/kg-day	7.2E-02	mg/kg-day	N/A	N/A	3.7E-03
	(Total)												3.7E-03
Dermal	Manganese	3200	mg/kg	3200	mg/kg	M	NA	mg/kg-day	2.9E-03	mg/kg-day	N/A	N/A	NA
	(Total)												--
												Total of Routes	3.7E-03

TABLE 7.5
CALCULATION OF NON-CANCER HAZARDS - ADOLESCENT TRESPASSER CONTACT WITH SWMU 2 SURFACE WATER
REASONABLE MAXIMUM EXPOSURE
NSWC CRANE
CRANE, INDIANA

Scenario Timeframe: Current/Future
Medium: Surface Water
Exposure Medium: Surface Water
Exposure Point: SWMU 2 - Dye Burial Ground
Receptor Population: Trespasser
Receptor Age: Adolescent

Exposure Route	Chemical of Potential Concern	Medium EPC Value	Medium EPC Units	Route EPC Value	Route EPC Units	EPC Selected for Hazard Calculation (1)	Intake (Non-Cancer)	Intake (Non-Cancer) Units	Reference Dose	Reference Dose Units	Reference Concentration	Reference Concentration Units	Hazard Quotient
Ingestion	Aluminum	523	ug/L	523	ug/L	M	6.9E-05	mg/kg-day	1.0E+00	mg/kg-day	N/A	N/A	6.9E-05
	Arsenic	0.410	ug/L	0.410	ug/L	M	5.4E-08	mg/kg-day	3.0E-04	mg/kg-day	N/A	N/A	1.8E-04
	Iron	874	ug/L	874	ug/L	M	1.2E-04	mg/kg-day	6.0E-01	mg/kg-day	N/A	N/A	1.9E-04
	(Total)												4.4E-04
Dermal	Aluminum	523	ug/L	523	ug/L	M	2.3E-05	mg/kg-day	1.0E+00	mg/kg-day	N/A	N/A	2.3E-05
	Arsenic	0.410	ug/L	0.410	ug/L	M	1.8E-08	mg/kg-day	3.0E-04	mg/kg-day	N/A	N/A	5.9E-05
	Iron	874	ug/L	874	ug/L	M	3.8E-05	mg/kg-day	6.0E-01	mg/kg-day	N/A	N/A	6.3E-05
	(Total)												1.5E-04
												Total of Routes	5.9E-04

TABLE 7.6
CALCULATION OF NON-CANCER HAZARDS - ADOLESCENT TRESPASSER CONTACT WITH SWMU 2 SURFACE WATER
CENTRAL TENDENCY EXPOSURE
NSWC CRANE
CRANE, INDIANA

Scenario Timeframe: Current/Future
Medium: Surface Water
Exposure Medium: Surface Water
Exposure Point: SWMU 2 - Dye Burial Ground
Receptor Population: Trespasser
Receptor Age: Adolescent

Exposure Route	Chemical of Potential Concern	Medium EPC Value	Medium EPC Units	Route EPC Value	Route EPC Units	EPC Selected for Hazard Calculation (1)	Intake (Non-Cancer)	Intake (Non-Cancer) Units	Reference Dose	Reference Dose Units	Reference Concentration	Reference Concentration Units	Hazard Quotient
Ingestion	Aluminum	523	ug/L	523	ug/L	M	1.7E-05	mg/kg-day	1.0E+00	mg/kg-day	N/A	N/A	1.7E-05
	Arsenic	0.410	ug/L	0.410	ug/L	M	1.4E-08	mg/kg-day	3.0E-04	mg/kg-day	N/A	N/A	4.5E-05
	Iron	874	ug/L	874	ug/L	M	2.9E-05	mg/kg-day	6.0E-01	mg/kg-day	N/A	N/A	4.8E-05
	(Total)												1.1E-04
Dermal	Aluminum	523	ug/L	523	ug/L	M	5.4E-06	mg/kg-day	1.0E+00	mg/kg-day	N/A	N/A	5.4E-06
	Arsenic	0.410	ug/L	0.410	ug/L	M	4.2E-09	mg/kg-day	3.0E-04	mg/kg-day	N/A	N/A	1.4E-05
	Iron	874	ug/L	874	ug/L	M	9.0E-06	mg/kg-day	6.0E-01	mg/kg-day	N/A	N/A	1.5E-05
	(Total)												3.4E-05
												Total of Routes	1.5E-04

TABLE 7.7
CALCULATION OF NON-CANCER HAZARDS - ADULT RECREATIONAL USER CONTACT WITH SWMU 2 SEDIMENT
REASONABLE MAXIMUM EXPOSURE
NSWC CRANE
CRANE, INDIANA

Scenario Timeframe: Future
Medium: Sediment
Exposure Medium: Sediment
Exposure Point: SWMU 2 - Dye Burial Ground
Receptor Population: Recreational User
Receptor Age: Adult

Exposure Route	Chemical of Potential Concern	Medium EPC Value	Medium EPC Units	Route EPC Value	Route EPC Units	EPC Selected for Hazard Calculation (1)	Intake (Non-Cancer)	Intake (Non-Cancer) Units	Reference Dose	Reference Dose Units	Reference Concentration	Reference Concentration Units	Hazard Quotient
Ingestion	Manganese	3200	mg/kg	3200	mg/kg	M	6.5E-04	mg/kg-day	7.2E-02	mg/kg-day	N/A	N/A	9.0E-03
	(Total)												9.0E-03
Dermal	Manganese	3200	mg/kg	3200	mg/kg	M	NA	mg/kg-day	2.9E-03	mg/kg-day	N/A	N/A	NA
	(Total)												--
												Total of Routes	9.0E-03

TABLE 7.8
CALCULATION OF NON-CANCER HAZARDS - ADULT RECREATIONAL USER CONTACT WITH SWMU 2 SEDIMENT
CENTRAL TENDENCY EXPOSURE
NSWC CRANE
CRANE, INDIANA

Scenario Timeframe: Future
Medium: Sediment
Exposure Medium: Sediment
Exposure Point: SWMU 2 - Dye Burial Ground
Receptor Population: Recreational User
Receptor Age: Adult

Exposure Route	Chemical of Potential Concern	Medium EPC Value	Medium EPC Units	Route EPC Value	Route EPC Units	EPC Selected for Hazard Calculation (1)	Intake (Non-Cancer)	Intake (Non-Cancer) Units	Reference Dose	Reference Dose Units	Reference Concentration	Reference Concentration Units	Hazard Quotient
Ingestion	Manganese	3200	mg/kg	3200	mg/kg	M	1.6E-04	mg/kg-day	7.2E-02	mg/kg-day	N/A	N/A	2.3E-03
	(Total)												2.3E-03
Dermal	Manganese	3200	mg/kg	3200	mg/kg	M	NA	mg/kg-day	2.9E-03	mg/kg-day	N/A	N/A	NA
	(Total)												--
												Total of Routes	2.3E-03

TABLE 7.9
CALCULATION OF NON-CANCER HAZARDS - ADULT RECREATIONAL USER CONTACT WITH SWMU 2 SURFACE WATER
REASONABLE MAXIMUM EXPOSURE
NSWC CRANE
CRANE, INDIANA

Scenario Timeframe: Future
Medium: Surface Water
Exposure Medium: Surface Water
Exposure Point: SWMU 2 - Dye Burial Ground
Receptor Population: Recreational User
Receptor Age: Adult

Exposure Route	Chemical of Potential Concern	Medium EPC Value	Medium EPC Units	Route EPC Value	Route EPC Units	EPC Selected for Hazard Calculation (1)	Intake (Non-Cancer)	Intake (Non-Cancer) Units	Reference Dose	Reference Dose Units	Reference Concentration	Reference Concentration Units	Hazard Quotient
Ingestion	Aluminum	523	ug/L	523	ug/L	M	5.3E-05	mg/kg-day	1.0E+00	mg/kg-day	N/A	N/A	5.3E-05
	Arsenic	0.410	ug/L	0.410	ug/L	M	4.2E-08	mg/kg-day	3.0E-04	mg/kg-day	N/A	N/A	1.4E-04
	Iron	874	ug/L	874	ug/L	M	8.9E-05	mg/kg-day	6.0E-01	mg/kg-day	N/A	N/A	1.5E-04
	(Total)												3.4E-04
Dermal	Aluminum	523	ug/L	523	ug/L	M	9.7E-06	mg/kg-day	1.0E+00	mg/kg-day	N/A	N/A	9.7E-06
	Arsenic	0.410	ug/L	0.410	ug/L	M	7.6E-09	mg/kg-day	3.0E-04	mg/kg-day	N/A	N/A	2.5E-05
	Iron	874	ug/L	874	ug/L	M	1.6E-05	mg/kg-day	6.0E-01	mg/kg-day	N/A	N/A	2.7E-05
	(Total)												6.2E-05
												Total of Routes	4.0E-04

TABLE 7.10
CALCULATION OF NON-CANCER HAZARDS - ADULT RECREATIONAL USER CONTACT WITH SWMU 2 SURFACE WATER
CENTRAL TENDENCY EXPOSURE
NSWC CRANE
CRANE, INDIANA

Scenario Timeframe: Future
Medium: Surface Water
Exposure Medium: Surface Water
Exposure Point: SWMU 2 - Dye Burial Ground
Receptor Population: Recreational User
Receptor Age: Adult

Exposure Route	Chemical of Potential Concern	Medium EPC Value	Medium EPC Units	Route EPC Value	Route EPC Units	EPC Selected for Hazard Calculation (1)	Intake (Non-Cancer)	Intake (Non-Cancer) Units	Reference Dose	Reference Dose Units	Reference Concentration	Reference Concentration Units	Hazard Quotient
Ingestion	Aluminum	523	ug/L	523	ug/L	M	2.7E-05	mg/kg-day	1.0E+00	mg/kg-day	N/A	N/A	2.7E-05
	Arsenic	0.410	ug/L	0.410	ug/L	M	2.1E-08	mg/kg-day	3.0E-04	mg/kg-day	N/A	N/A	7.0E-05
	Iron	874	ug/L	874	ug/L	M	4.5E-05	mg/kg-day	6.0E-01	mg/kg-day	N/A	N/A	7.4E-05
	(Total)												1.7E-04
Dermal	Aluminum	523	ug/L	523	ug/L	M	4.8E-06	mg/kg-day	1.0E+00	mg/kg-day	N/A	N/A	4.8E-06
	Arsenic	0.410	ug/L	0.410	ug/L	M	3.8E-09	mg/kg-day	3.0E-04	mg/kg-day	N/A	N/A	1.3E-05
	Iron	874	ug/L	874	ug/L	M	8.1E-06	mg/kg-day	6.0E-01	mg/kg-day	N/A	N/A	1.3E-05
	(Total)												3.1E-05
												Total of Routes	2.0E-04

TABLE 7.11
CALCULATION OF NON-CANCER HAZARDS - CHILD RESIDENT TAP WATER CONTACT WITH SWMU 2 GROUNDWATER
REASONABLE MAXIMUM EXPOSURE
NSWC CRANE
CRANE, INDIANA

Scenario Timeframe: Future
Medium: Ground Water
Exposure Medium: Ground Water
Exposure Point: Lower Pennsylvanian Aquifer
Receptor Population: Resident
Receptor Age: Child

Exposure Route	Chemical of Potential Concern	Medium EPC Value	Medium EPC Units	Route EPC Value	Route EPC Units	EPC Selected for Hazard Calculation (1)	Intake (Non-Cancer)	Intake (Non-Cancer) Units	Reference Dose (2)	Reference Dose Units	Reference Concentration	Reference Concentration Units	Hazard Quotient
Ingestion	Aluminum	23300	ug/L	23300	ug/L	M	2.2E+00	mg/kg/day	1.0E+00	mg/kg/day	N/A	N/A	2.2E+00
	Arsenic	1.6	ug/L	1.6	ug/L	M	1.5E-04	mg/kg/day	3.0E-04	mg/kg/day	N/A	N/A	5.1E-01
	Beryllium	4.7	ug/L	4.7	ug/L	M	4.5E-04	mg/kg/day	2.0E-03	mg/kg/day	N/A	N/A	2.3E-01
	Cadmium	16	ug/L	16	ug/L	M	1.5E-03	mg/kg/day	5.0E-04	mg/kg/day	N/A	N/A	3.1E+00
	Cobalt	445	ug/L	445	ug/L	M	4.3E-02	mg/kg/day	2.0E-02	mg/kg/day	N/A	N/A	2.1E+00
	Nickel	868	ug/L	868	ug/L	M	8.3E-02	mg/kg/day	2.0E-02	mg/kg/day	N/A	N/A	4.2E+00
	Zinc	2280	ug/L	2280	ug/L	M	2.2E-01	mg/kg/day	3.0E-01	mg/kg/day	N/A	N/A	7.3E-01
	(Total)												1.3E+01
Dermal	Aluminum	23300	ug/L	23300	ug/L	M	2.5E-03	mg/kg/day	1.0E+00	mg/kg/day	N/A	N/A	2.5E-03
	Arsenic	1.6	ug/L	1.6	ug/L	M	1.7E-07	mg/kg/day	3.0E-04	mg/kg/day	N/A	N/A	5.6E-04
	Beryllium	4.7	ug/L	4.7	ug/L	M	5.0E-07	mg/kg/day	1.4E-05	mg/kg/day	N/A	N/A	3.5E-02
	Cadmium	16	ug/L	16	ug/L	M	1.7E-06	mg/kg/day	2.5E-05	mg/kg/day	N/A	N/A	6.8E-02
	Cobalt	445	ug/L	445	ug/L	M	4.7E-05	mg/kg/day	2.0E-02	mg/kg/day	N/A	N/A	2.3E-03
	Nickel	868	ug/L	868	ug/L	M	1.8E-05	mg/kg/day	8.0E-04	mg/kg/day	N/A	N/A	2.3E-02
	Zinc	2280	ug/L	2280	ug/L	M	1.4E-04	mg/kg/day	3.0E-01	mg/kg/day	N/A	N/A	4.8E-04
	(Total)												1.3E-01
												Total Hazard Index Across All Exposure Routes/Pathways	1.3E+01

TABLE 7.12
CALCULATION OF NON-CANCER HAZARDS - CHILD RESIDENT TAP WATER CONTACT WITH SWMU 2 GROUNDWATER
CENTRAL TENDENCY EXPOSURE
NSWC CRANE
CRANE, INDIANA

Scenario Timeframe: Future
Medium: Ground Water
Exposure Medium: Ground Water
Exposure Point: Lower Pennsylvanian Aquifer
Receptor Population: Resident
Receptor Age: Child

Exposure Route	Chemical of Potential Concern	Medium EPC Value	Medium EPC Units	Route EPC Value	Route EPC Units	EPC Selected for Hazard Calculation (1)	Intake (Non-Cancer)	Intake (Non-Cancer) Units	Reference Dose	Reference Dose Units	Reference Concentration	Reference Concentration Units	Hazard Quotient
Ingestion	Aluminum	23300	ug/L	23300	ug/L	M	6.6E-01	mg/kg/day	1.0E+00	mg/kg/day	N/A	N/A	6.6E-01
	Arsenic	1.60	ug/L	1.60	ug/L	M	4.5E-05	mg/kg/day	3.0E-04	mg/kg/day	N/A	N/A	1.5E-01
	Beryllium	4.70	ug/L	4.70	ug/L	M	1.3E-04	mg/kg/day	2.0E-03	mg/kg/day	N/A	N/A	6.6E-02
	Cadmium	16.1	ug/L	16.1	ug/L	M	4.5E-04	mg/kg/day	5.0E-04	mg/kg/day	N/A	N/A	9.1E-01
	Cobalt	445	ug/L	445	ug/L	M	1.3E-02	mg/kg/day	2.0E-02	mg/kg/day	N/A	N/A	6.3E-01
	Nickel	868	ug/L	868	ug/L	M	2.4E-02	mg/kg/day	2.0E-02	mg/kg/day	N/A	N/A	1.2E+00
	Zinc	2280	ug/L	2280	ug/L	M	6.4E-02	mg/kg/day	3.0E-01	mg/kg/day	N/A	N/A	2.1E-01
	(Total)												3.8E+00
Dermal	Aluminum	23300	ug/L	23300	ug/L	M	1.1E-03	mg/kg/day	1.0E+00	mg/kg/day	N/A	N/A	1.1E-03
	Arsenic	1.60	ug/L	1.60	ug/L	M	7.5E-08	mg/kg/day	3.0E-04	mg/kg/day	N/A	N/A	2.5E-04
	Beryllium	4.70	ug/L	4.70	ug/L	M	2.2E-07	mg/kg/day	1.4E-05	mg/kg/day	N/A	N/A	1.6E-02
	Cadmium	16.1	ug/L	16.1	ug/L	M	7.6E-07	mg/kg/day	2.5E-05	mg/kg/day	N/A	N/A	3.0E-02
	Cobalt	445	ug/L	445	ug/L	M	2.1E-05	mg/kg/day	2.0E-02	mg/kg/day	N/A	N/A	1.0E-03
	Nickel	868	ug/L	868	ug/L	M	8.2E-06	mg/kg/day	8.0E-04	mg/kg/day	N/A	N/A	1.0E-02
	Zinc	2280	ug/L	2280	ug/L	M	6.4E-05	mg/kg/day	3.0E-01	mg/kg/day	N/A	N/A	2.1E-04
	(Total)												5.9E-02
												Total Hazard Index Across All Exposure Routes/Pathways	3.9E+00

TABLE 7.13
CALCULATION OF NON-CANCER HAZARDS - ADULT RESIDENT TAP WATER CONTACT WITH SWMU 2 GROUNDWATER
REASONABLE MAXIMUM EXPOSURE
NSWC CRANE
CRANE, INDIANA

Scenario Timeframe: Future
Medium: Ground Water
Exposure Medium: Ground Water
Exposure Point: Lower Pennslvanian Aquifer
Receptor Population: Resident
Receptor Age: Adult

Exposure Route	Chemical of Potential Concern	Medium EPC Value	Medium EPC Units	Route EPC Value	Route EPC Units	EPC Selected for Hazard Calculation (1)	Intake (Non-Cancer)	Intake (Non-Cancer) Units	Reference Dose	Reference Dose Units	Reference Concentration	Reference Concentration Units	Hazard Quotient
Ingestion	Aluminum	23300	ug/L	23300	ug/L	M	6.4E-01	mg/kg/day	1.0E+00	mg/kg/day	N/A	N/A	6.4E-01
	Arsenic	1.60	ug/L	1.60	ug/L	M	4.4E-05	mg/kg/day	3.0E-04	mg/kg/day	N/A	N/A	1.5E-01
	Beryllium	4.70	ug/L	4.70	ug/L	M	1.3E-04	mg/kg/day	2.0E-03	mg/kg/day	N/A	N/A	6.4E-02
	Cadmium	16.1	ug/L	16.1	ug/L	M	4.4E-04	mg/kg/day	5.0E-04	mg/kg/day	N/A	N/A	8.8E-01
	Cobalt	445	ug/L	445	ug/L	M	1.2E-02	mg/kg/day	2.0E-02	mg/kg/day	N/A	N/A	6.1E-01
	Nickel	868	ug/L	868	ug/L	M	2.4E-02	mg/kg/day	2.0E-02	mg/kg/day	N/A	N/A	1.2E+00
	Zinc	2280	ug/L	2280	ug/L	M	6.2E-02	mg/kg/day	3.0E-01	mg/kg/day	N/A	N/A	2.1E-01
	(Total)												2.3E+00
Dermal	Aluminum	23300	ug/L	23300	ug/L	M	1.4E-03	mg/kg/day	1.0E+00	mg/kg/day	N/A	N/A	1.4E-03
	Arsenic	1.60	ug/L	1.60	ug/L	M	9.9E-08	mg/kg/day	3.0E-04	mg/kg/day	N/A	N/A	3.3E-04
	Beryllium	4.70	ug/L	4.70	ug/L	M	2.9E-07	mg/kg/day	1.4E-05	mg/kg/day	N/A	N/A	2.1E-02
	Cadmium	16.1	ug/L	16.1	ug/L	M	9.9E-07	mg/kg/day	2.5E-05	mg/kg/day	N/A	N/A	4.0E-02
	Cobalt	445	ug/L	445	ug/L	M	2.7E-05	mg/kg/day	2.0E-02	mg/kg/day	N/A	N/A	1.4E-03
	Nickel	868	ug/L	868	ug/L	M	1.1E-05	mg/kg/day	8.0E-04	mg/kg/day	N/A	N/A	1.3E-02
	Zinc	2280	ug/L	2280	ug/L	M	8.4E-05	mg/kg/day	3.0E-01	mg/kg/day	N/A	N/A	2.8E-04
	(Total)												6.4E-02
												Total Hazard Index Across All Exposure Routes/Pathways	2.4E+00

TABLE 7.14
CALCULATION OF NON-CANCER HAZARDS - ADULT RESIDENT TAP WATER CONTACT WITH SWMU 2 GROUNDWATER
CENTRAL TENDENCY EXPOSURE
NSWC CRANE
CRANE, INDIANA

Scenario Timeframe: Future
Medium: Ground Water
Exposure Medium: Ground Water
Exposure Point: Lower Pennsylvanian Aquifer
Receptor Population: Resident
Receptor Age: Adult

Exposure Route	Chemical of Potential Concern	Medium EPC Value	Medium EPC Units	Route EPC Value	Route EPC Units	EPC Selected for Hazard Calculation (1)	Intake (Non-Cancer)	Intake (Non-Cancer) Units	Reference Dose	Reference Dose Units	Reference Concentration	Reference Concentration Units	Hazard Quotient
Ingestion	Aluminum	23300	ug/L	23300	ug/L	M	3.0E-01	mg/kg/day	1.0E+00	mg/kg/day	N/A	N/A	3.0E-01
	Arsenic	1.6	ug/L	1.6	ug/L	M	2.1E-05	mg/kg/day	3.0E-04	mg/kg/day	N/A	N/A	6.8E-02
	Beryllium	4.7	ug/L	4.7	ug/L	M	6.0E-05	mg/kg/day	2.0E-03	mg/kg/day	N/A	N/A	3.0E-02
	Cadmium	16	ug/L	16	ug/L	M	2.1E-04	mg/kg/day	5.0E-04	mg/kg/day	N/A	N/A	4.1E-01
	Cobalt	445	ug/L	445	ug/L	M	5.7E-03	mg/kg/day	2.0E-02	mg/kg/day	N/A	N/A	2.9E-01
	Nickel	868	ug/L	868	ug/L	M	1.1E-02	mg/kg/day	2.0E-02	mg/kg/day	N/A	N/A	5.6E-01
	Zinc	2280	ug/L	2280	ug/L	M	2.9E-02	mg/kg/day	3.0E-01	mg/kg/day	N/A	N/A	9.7E-02
	(Total)												1.1E+00
Dermal	Aluminum	23300	ug/L	23300	ug/L	M	6.4E-04	mg/kg/day	1.0E+00	mg/kg/day	N/A	N/A	6.4E-04
	Arsenic	1.6	ug/L	1.6	ug/L	M	4.4E-08	mg/kg/day	3.0E-04	mg/kg/day	N/A	N/A	1.5E-04
	Beryllium	4.7	ug/L	4.7	ug/L	M	1.3E-07	mg/kg/day	1.4E-05	mg/kg/day	N/A	N/A	9.2E-03
	Cadmium	16	ug/L	16	ug/L	M	4.4E-07	mg/kg/day	2.5E-05	mg/kg/day	N/A	N/A	1.8E-02
	Cobalt	445	ug/L	445	ug/L	M	1.2E-05	mg/kg/day	2.0E-02	mg/kg/day	N/A	N/A	6.1E-04
	Nickel	868	ug/L	868	ug/L	M	4.8E-06	mg/kg/day	8.0E-04	mg/kg/day	N/A	N/A	6.0E-03
	Zinc	2280	ug/L	2280	ug/L	M	3.8E-05	mg/kg/day	3.0E-01	mg/kg/day	N/A	N/A	1.3E-04
	(Total)												2.8E-02
												Total Hazard Index Across All Exposure Routes/Pathways	1.1E+00

TABLE 8.1
CALCULATION OF CANCER RISKS - ADULT CONSTRUCTION WORKERS CONTACT WITH SWMU 2 SOIL
REASONABLE MAXIMUM EXPOSURE
NSWC CRANE
CRANE, INDIANA

Scenario Timeframe: Current/Future
Medium: Soil
Exposure Medium: Soil
Exposure Point: SWMU 2 - Dye Burial Ground
Receptor Population: Construction Workers
Receptor Age: Adult

Exposure Route	Chemical of Potential Concern	Medium EPC Value	Medium EPC Units	Route EPC Value	Route EPC Units	EPC Selected for Risk Calculation (1)	Intake (Cancer)	Intake (Cancer) Units	Cancer Slope Factor	Cancer Slope Factor Units	Cancer Risk
Ingestion	Aluminum	6588	mg/kg	6588	mg/kg	M	1.8E-05	mg/kg-day	--	1/(mg/kg-day)	--
	Arsenic	2.91	mg/kg	2.91	mg/kg	M	7.8E-09	mg/kg-day	1.5E+00	1/(mg/kg-day)	1.2E-08
	Iron	14438	mg/kg	14438	mg/kg	M	3.9E-05	mg/kg-day	--	1/(mg/kg-day)	--
	(Total)										1.2E-08
Dermal	Aluminum	6588	mg/kg	6588	mg/kg	M	NA	mg/kg-day	--	1/(mg/kg-day)	--
	Arsenic	2.91	mg/kg	2.91	mg/kg	M	4.8E-10	mg/kg-day	1.5E+00	1/(mg/kg-day)	7.2E-10
	Iron	14438	mg/kg	14438	mg/kg	M	NA	mg/kg-day	--	1/(mg/kg-day)	--
	(Total)										7.2E-10
										Total of Routes	1.2E-08

TABLE 8.2
CALCULATION OF CANCER RISKS - ADULT CONSTRUCTION WORKERS CONTACT WITH SWMU 2 SOIL
CENTRAL TENDENCY EXPOSURE
NSWC CRANE
CRANE, INDIANA

Scenario Timeframe: Current/Future
Medium: Soil
Exposure Medium: Soil
Exposure Point: SWMU 2 - Dye Burial Ground
Receptor Population: Construction Workers
Receptor Age: Adult

Exposure Route	Chemical of Potential Concern	Medium EPC Value	Medium EPC Units	Route EPC Value	Route EPC Units	EPC Selected for Risk Calculation (1)	Intake (Cancer)	Intake (Cancer) Units	Cancer Slope Factor	Cancer Slope Factor Units	Cancer Risk
Ingestion	Aluminum	6588	mg/kg	6588	mg/kg	M	8.8E-06	mg/kg-day	--	1/(mg/kg-day)	--
	Arsenic	2.91	mg/kg	2.91	mg/kg	M	3.9E-09	mg/kg-day	1.5E+00	1/(mg/kg-day)	5.9E-09
	Iron	14438	mg/kg	14438	mg/kg	M	1.9E-05	mg/kg-day	--	1/(mg/kg-day)	--
	(Total)										5.9E-09
Dermal	Aluminum	6588	mg/kg	6588	mg/kg	M	NA	mg/kg-day	--	1/(mg/kg-day)	--
	Arsenic	2.91	mg/kg	2.91	mg/kg	M	1.6E-10	mg/kg-day	1.5E+00	1/(mg/kg-day)	2.4E-10
	Iron	14438	mg/kg	14438	mg/kg	M	NA	mg/kg-day	--	1/(mg/kg-day)	--
	(Total)										2.4E-10
										Total of Routes	6.1E-09

TABLE 8.3
CALCULATION OF CANCER RISKS - ADOLESCENT TRESPASSER CONTACT WITH SWMU 2 SEDIMENT
REASONABLE MAXIMUM EXPOSURE
NSWC CRANE
CRANE, INDIANA

Scenario Timeframe: Current/Future
Medium: Sediment
Exposure Medium: Sediment
Exposure Point: SWMU 2 - Dye Burial Ground
Receptor Population: Trespasser
Receptor Age: Adolescent

Exposure Route	Chemical of Potential Concern	Medium EPC Value	Medium EPC Units	Route EPC Value	Route EPC Units	EPC Selected for Risk Calculation (1)	Intake (Cancer)	Intake (Cancer) Units	Cancer Slope Factor	Cancer Slope Factor Units	Cancer Risk
Ingestion	Manganese	3200	mg/kg	3200	mg/kg	M	1.7E-04	mg/kg-day	--	1/(mg/kg-day)	--
	(Total)										--
Dermal	Manganese	3200	mg/kg	3200	mg/kg	M	NA	mg/kg-day	--	1/(mg/kg-day)	--
	(Total)										--
										Total of Routes	--

TABLE 8.4
CALCULATION OF CANCER RISKS - ADOLESCENT TRESPASSER CONTACT WITH SWMU 2 SEDIMENT
CENTRAL TENDENCY EXPOSURE
NSWC CRANE
CRANE, INDIANA

Scenario Timeframe: Current/Future
Medium: Sediment
Exposure Medium: Sediment
Exposure Point: SWMU 2 - Dye Burial Ground
Receptor Population: Trespasser
Receptor Age: Adolescent

Exposure Route	Chemical of Potential Concern	Medium EPC Value	Medium EPC Units	Route EPC Value	Route EPC Units	EPC Selected for Risk Calculation (1)	Intake (Cancer)	Intake (Cancer) Units	Cancer Slope Factor	Cancer Slope Factor Units	Cancer Risk
Ingestion	Manganese	3200	mg/kg	3200	mg/kg	M	4.2E-05	mg/kg-day	--	1/(mg/kg-day)	--
	(Total)										--
Dermal	Manganese	3200	mg/kg	3200	mg/kg	M	NA	mg/kg-day	--	1/(mg/kg-day)	--
	(Total)										--
										Total of Routes	--

TABLE 8.5
CALCULATION OF CANCER RISKS - ADOLESCENT TRESPASSER CONTACT WITH SWMU 2 SURFACE WATER
REASONABLE MAXIMUM EXPOSURE
NSWC CRANE
CRANE, INDIANA

Scenario Timeframe: Current/Future
Medium: Surface Water
Exposure Medium: Surface Water
Exposure Point: SWMU 2 - Dye Burial Ground
Receptor Population: Trespasser
Receptor Age: Adolescent

Exposure Route	Chemical of Potential Concern	Medium EPC Value	Medium EPC Units	Route EPC Value	Route EPC Units	EPC Selected for Risk Calculation (1)	Intake (Cancer)	Intake (Cancer) Units	Cancer Slope Factor	Cancer Slope Factor Units	Cancer Risk
Ingestion	Aluminum	523	ug/L	523	ug/L	M	1.1E-05	mg/kg-day	--	1/(mg/kg-day)	--
	Arsenic	0.410	ug/L	0.410	ug/L	M	8.5E-09	mg/kg-day	1.5E+00	1/(mg/kg-day)	1.3E-08
	Iron	874	ug/L	874	ug/L	M	1.8E-05	mg/kg-day	--	1/(mg/kg-day)	--
	(Total)										1.3E-08
Dermal	Aluminum	523	ug/L	523	ug/L	M	3.6E-06	mg/kg-day	--	1/(mg/kg-day)	--
	Arsenic	0.410	ug/L	0.410	ug/L	M	2.8E-09	mg/kg-day	1.5E+00	1/(mg/kg-day)	4.2E-09
	Iron	874	ug/L	874	ug/L	M	6.0E-06	mg/kg-day	--	1/(mg/kg-day)	--
	(Total)										4.2E-09
										Total of Routes	1.7E-08

TABLE 8.6
CALCULATION OF CANCER RISKS - ADOLESCENT TRESPASSER CONTACT WITH SWMU 2 SURFACE WATER
CENTRAL TENDENCY EXPOSURE
NSWC CRANE
CRANE, INDIANA

Scenario Timeframe: Current/Future
Medium: Surface Water
Exposure Medium: Surface Water
Exposure Point: SWMU 2 - Dye Burial Ground
Receptor Population: Trespasser
Receptor Age: Adolescent

Exposure Route	Chemical of Potential Concern	Medium EPC Value	Medium EPC Units	Route EPC Value	Route EPC Units	EPC Selected for Risk Calculation (1)	Intake (Cancer)	Intake (Cancer) Units	Cancer Slope Factor	Cancer Slope Factor Units	Cancer Risk
Ingestion	Aluminum	523	ug/L	523	ug/L	M	2.7E-06	mg/kg-day	--	1/(mg/kg-day)	--
	Arsenic	0.410	ug/L	0.410	ug/L	M	2.1E-09	mg/kg-day	1.5E+00	1/(mg/kg-day)	3.2E-09
	Iron	874	ug/L	874	ug/L	M	4.6E-06	mg/kg-day	--	1/(mg/kg-day)	--
	(Total)										3.2E-09
Dermal	Aluminum	523	ug/L	523	ug/L	M	8.4E-07	mg/kg-day	--	1/(mg/kg-day)	--
	Arsenic	0.410	ug/L	0.410	ug/L	M	6.6E-10	mg/kg-day	1.5E+00	1/(mg/kg-day)	9.9E-10
	Iron	874	ug/L	874	ug/L	M	1.4E-06	mg/kg-day	--	1/(mg/kg-day)	--
	(Total)										9.9E-10
										Total of Routes	4.2E-09

TABLE 8.7
CALCULATION OF CANCER RISKS - ADULT RECREATIONAL USER CONTACT WITH SWMU 2 SEDIMENT
REASONABLE MAXIMUM EXPOSURE
NSWC CRANE
CRANE, INDIANA

Scenario Timeframe: Future
Medium: Sediment
Exposure Medium: Sediment
Exposure Point: SWMU 2 - Dye Burial Ground
Receptor Population: Recreational User
Receptor Age: Adult

Exposure Route	Chemical of Potential Concern	Medium EPC Value	Medium EPC Units	Route EPC Value	Route EPC Units	EPC Selected for Risk Calculation (1)	Intake (Cancer)	Intake (Cancer) Units	Cancer Slope Factor	Cancer Slope Factor Units	Cancer Risk
Ingestion	Manganese	3200	mg/kg	3200	mg/kg	M	2.8E-04	mg/kg-day	--	1/(mg/kg-day)	--
	(Total)										--
Dermal	Manganese	3200	mg/kg	3200	mg/kg	M	NA	mg/kg-day	--	1/(mg/kg-day)	--
	(Total)										--
										Total of Routes	--

TABLE 8.8
CALCULATION OF CANCER RISKS - ADULT RECREATIONAL USER CONTACT WITH SWMU 2 SEDIMENT
CENTRAL TENDENCY EXPOSURE
NSWC CRANE
CRANE, INDIANA

Scenario Timeframe: Future
Medium: Sediment
Exposure Medium: Sediment
Exposure Point: SWMU 2 - Dye Burial Ground
Receptor Population: Recreational User
Receptor Age: Adult

Exposure Route	Chemical of Potential Concern	Medium EPC Value	Medium EPC Units	Route EPC Value	Route EPC Units	EPC Selected for Risk Calculation (1)	Intake (Cancer)	Intake (Cancer) Units	Cancer Slope Factor	Cancer Slope Factor Units	Cancer Risk
Ingestion	Manganese	3200	mg/kg	3200	mg/kg	M	2.1E-05	mg/kg-day	--	1/(mg/kg-day)	--
	(Total)										--
Dermal	Manganese	3200	mg/kg	3200	mg/kg	M	NA	mg/kg-day	--	1/(mg/kg-day)	--
	(Total)										--
										Total of Routes	--

TABLE 8.9
CALCULATION OF CANCER RISKS - ADULT RECREATIONAL USER CONTACT WITH SWMU 2 SURFACE WATER
REASONABLE MAXIMUM EXPOSURE
NSWC CRANE
CRANE, INDIANA

Scenario Timeframe: Future
Medium: Surface Water
Exposure Medium: Surface Water
Exposure Point: SWMU 2 - Dye Burial Ground
Receptor Population: Recreational User
Receptor Age: Adult

Exposure Route	Chemical of Potential Concern	Medium EPC Value	Medium EPC Units	Route EPC Value	Route EPC Units	EPC Selected for Risk Calculation (1)	Intake (Cancer)	Intake (Cancer) Units	Cancer Slope Factor	Cancer Slope Factor Units	Cancer Risk
Ingestion	Aluminum	523	ug/L	523	ug/L	M	2.3E-05	mg/kg-day	--	1/(mg/kg-day)	--
	Arsenic	0.410	ug/L	0.410	ug/L	M	1.8E-08	mg/kg-day	1.5E+00	1/(mg/kg-day)	2.7E-08
	Iron	874	ug/L	874	ug/L	M	3.8E-05	mg/kg-day	--	1/(mg/kg-day)	--
	(Total)										2.7E-08
Dermal	Aluminum	523	ug/L	523	ug/L	M	4.1E-06	mg/kg-day	--	1/(mg/kg-day)	--
	Arsenic	0.410	ug/L	0.410	ug/L	M	3.2E-09	mg/kg-day	1.5E+00	1/(mg/kg-day)	4.9E-09
	Iron	874	ug/L	874	ug/L	M	6.9E-06	mg/kg-day	--	1/(mg/kg-day)	--
	(Total)										4.9E-09
										Total of Routes	3.2E-08

TABLE 8.10
CALCULATION OF CANCER RISKS - ADULT RECREATIONAL USER CONTACT WITH SWMU 2 SURFACE WATER
CENTRAL TENDENCY EXPOSURE
NSWC CRANE
CRANE, INDIANA

Scenario Timeframe: Future
Medium: Surface Water
Exposure Medium: Surface Water
Exposure Point: SWMU 2 - Dye Burial Ground
Receptor Population: Recreational User
Receptor Age: Adult

Exposure Route	Chemical of Potential Concern	Medium EPC Value	Medium EPC Units	Route EPC Value	Route EPC Units	EPC Selected for Risk Calculation (1)	Intake (Cancer)	Intake (Cancer) Units	Cancer Slope Factor	Cancer Slope Factor Units	Cancer Risk
Ingestion	Aluminum	523	ug/L	523	ug/L	M	3.4E-06	mg/kg-day	--	1/(mg/kg-day)	--
	Arsenic	0.410	ug/L	0.410	ug/L	M	2.7E-09	mg/kg-day	1.5E+00	1/(mg/kg-day)	4.0E-09
	Iron	874	ug/L	874	ug/L	M	5.7E-06	mg/kg-day	--	1/(mg/kg-day)	--
	(Total)										4.0E-09
Dermal	Aluminum	523	ug/L	523	ug/L	M	6.2E-07	mg/kg-day	--	1/(mg/kg-day)	--
	Arsenic	0.410	ug/L	0.410	ug/L	M	4.9E-10	mg/kg-day	1.5E+00	1/(mg/kg-day)	7.3E-10
	Iron	874	ug/L	874	ug/L	M	1.0E-06	mg/kg-day	--	1/(mg/kg-day)	--
	(Total)										7.3E-10
										Total of Routes	4.8E-09

TABLE 8.11
CALCULATION OF CANCER RISKS - CHILD RESIDENT TAP WATER CONTACT WITH SWMU 2 GROUNDWATER
REASONABLE MAXIMUM EXPOSURE
NSWC CRANE
CRANE, INDIANA

Scenario Timeframe: Future
Medium: Ground Water
Exposure Medium: Ground Water
Exposure Point: Lower Pennslvanian Aquifer
Receptor Population: Resident
Receptor Age: Child

Exposure Route	Chemical of Potential Concern	Medium EPC Value	Medium EPC Units	Route EPC Value	Route EPC Units	EPC Selected for Risk Calculation (1)	Intake (Cancer)	Intake (Cancer) Units	Cancer Slope Factor	Cancer Slope Factor Units	Cancer Risk
Ingestion	Aluminum	23300	ug/L	23300	ug/L	M	1.92E-01	mg/kg/day	NA	1/(mg/kg-day)	- -
	Arsenic	1.60	ug/L	1.60	ug/L	M	1.3E-05	mg/kg/day	1.5E+00	1/(mg/kg-day)	2.0E-05
	Beryllium	4.70	ug/L	4.70	ug/L	M	3.9E-05	mg/kg/day	NA	1/(mg/kg-day)	- -
	Cadmium	16.1	ug/L	16.1	ug/L	M	1.3E-04	mg/kg/day	NA	1/(mg/kg-day)	- -
	Cobalt	445	ug/L	445	ug/L	M	3.7E-03	mg/kg/day	NA	1/(mg/kg-day)	- -
	Nickel	868	ug/L	868	ug/L	M	7.1E-03	mg/kg/day	NA	1/(mg/kg-day)	- -
	Zinc	2280	ug/L	2280	ug/L	M	1.9E-02	mg/kg/day	NA	1/(mg/kg-day)	- -
	(Total)										2.0E-05
Dermal	Aluminum	23300	ug/L	23300	ug/L	M	2.1E-04	mg/kg/day	NA	1/(mg/kg-day)	- -
	Arsenic	1.60	ug/L	1.60	ug/L	M	1.4E-08	mg/kg/day	1.5E+00	1/(mg/kg-day)	2.2E-08
	Beryllium	4.70	ug/L	4.70	ug/L	M	4.2E-08	mg/kg/day	NA	1/(mg/kg-day)	- -
	Cadmium	16.1	ug/L	16.1	ug/L	M	1.5E-07	mg/kg/day	NA	1/(mg/kg-day)	- -
	Cobalt	445	ug/L	445	ug/L	M	4.0E-06	mg/kg/day	NA	1/(mg/kg-day)	- -
	Nickel	868	ug/L	868	ug/L	M	1.6E-06	mg/kg/day	NA	1/(mg/kg-day)	- -
	Zinc	2280	ug/L	2280	ug/L	M	1.2E-05	mg/kg/day	NA	1/(mg/kg-day)	- -
	(Total)										2.2E-08
										Total of Routes	2.0E-05

TABLE 8.12
CALCULATION OF CANCER RISKS - CHILD RESIDENT TAP WATER CONTACT WITH SWMU 2 GROUNDWATER
CENTRAL TENDENCY EXPOSURE
NSWC CRANE
CRANE, INDIANA

Scenario Timeframe: Future
Medium: Ground Water
Exposure Medium: Ground Water
Exposure Point: Lower Pennsylvanian Aquifer
Receptor Population: Resident
Receptor Age: Child

Exposure Route	Chemical of Potential Concern	Medium EPC Value	Medium EPC Units	Route EPC Value	Route EPC Units	EPC Selected for Risk Calculation (1)	Intake (Cancer)	Intake (Cancer) Units	Cancer Slope Factor	Cancer Slope Factor Units	Cancer Risk
Ingestion	Aluminum	23300	ug/L	2.33E+04	ug/L	M	1.88E-02	mg/kg/day	NA	1/(mg/kg-day)	- -
	Arsenic	2	ug/L	2	ug/L	M	1.3E-06	mg/kg/day	1.5E+00	1/(mg/kg-day)	1.9E-06
	Beryllium	4.70	ug/L	4.70	ug/L	M	3.8E-06	mg/kg/day	NA	1/(mg/kg-day)	- -
	Cadmium	16.10	ug/L	16.10	ug/L	M	1.3E-05	mg/kg/day	NA	1/(mg/kg-day)	- -
	Cobalt	445.00	ug/L	445.00	ug/L	M	3.6E-04	mg/kg/day	NA	1/(mg/kg-day)	- -
	Nickel	868.0	ug/L	868.0	ug/L	M	7.0E-04	mg/kg/day	NA	1/(mg/kg-day)	- -
	Zinc	2280	ug/L	2280	ug/L	M	1.8E-03	mg/kg/day	NA	1/(mg/kg-day)	- -
	(Total)										1.9E-06
Dermal	Aluminum	23300	ug/L	23300	ug/L	M	3.1E-05	mg/kg/day	NA	1/(mg/kg-day)	- -
	Arsenic	1.60	ug/L	1.60	ug/L	M	2.2E-09	mg/kg/day	1.5E+00	1/(mg/kg-day)	3.2E-09
	Beryllium	4.70	ug/L	4.70	ug/L	M	6.3E-09	mg/kg/day	NA	1/(mg/kg-day)	- -
	Cadmium	16.10	ug/L	16.10	ug/L	M	2.2E-08	mg/kg/day	NA	1/(mg/kg-day)	- -
	Cobalt	445.00	ug/L	445.00	ug/L	M	6.0E-07	mg/kg/day	NA	1/(mg/kg-day)	- -
	Nickel	868.0	ug/L	868.0	ug/L	M	2.3E-07	mg/kg/day	NA	1/(mg/kg-day)	- -
	Zinc	2280	ug/L	2280	ug/L	M	1.8E-06	mg/kg/day	NA	1/(mg/kg-day)	- -
	(Total)										3.2E-09
										Total of Routes	1.9E-06

TABLE 8.13
CALCULATION OF CANCER RISKS - ADULT RESIDENT TAP WATER CONTACT WITH SWMU 2 GROUNDWATER
REASONABLE MAXIMUM EXPOSURE
NSWC CRANE
CRANE, INDIANA

Scenario Timeframe: Future
Medium: Ground Water
Exposure Medium: Ground Water
Exposure Point: Lower Pennsylvanian Aquifer
Receptor Population: Resident
Receptor Age: Adult

Exposure Route	Chemical of Potential Concern	Medium EPC Value	Medium EPC Units	Route EPC Value	Route EPC Units	EPC Selected for Risk Calculation (1)	Intake (Cancer)	Intake (Cancer) Units	Cancer Slope Factor	Cancer Slope Factor Units	Cancer Risk
Ingestion	Aluminum	23300	ug/L	23300	ug/L	M	2.2E-01	mg/kg/day	NA	1/(mg/kg-day)	- -
	Arsenic	1.60	ug/L	1.60	ug/L	M	1.5E-05	mg/kg/day	1.5E+00	1/(mg/kg-day)	2.3E-05
	Beryllium	4.70	ug/L	4.70	ug/L	M	4.4E-05	mg/kg/day	NA	1/(mg/kg-day)	- -
	Cadmium	16.1	ug/L	16.1	ug/L	M	1.5E-04	mg/kg/day	NA	1/(mg/kg-day)	- -
	Cobalt	445	ug/L	445	ug/L	M	4.2E-03	mg/kg/day	NA	1/(mg/kg-day)	- -
	Nickel	868	ug/L	868	ug/L	M	8.2E-03	mg/kg/day	NA	1/(mg/kg-day)	- -
	Zinc	2280	ug/L	2280	ug/L	M	2.1E-02	mg/kg/day	NA	1/(mg/kg-day)	- -
	(Total)										2.3E-05
Dermal	Aluminum	23300	ug/L	23300	ug/L	M	4.9E-04	mg/kg/day	NA	1/(mg/kg-day)	- -
	Arsenic	1.60	ug/L	1.60	ug/L	M	3.4E-08	mg/kg/day	1.5E+00	1/(mg/kg-day)	5.1E-08
	Beryllium	4.70	ug/L	4.70	ug/L	M	9.9E-08	mg/kg/day	NA	1/(mg/kg-day)	- -
	Cadmium	16.1	ug/L	16.1	ug/L	M	3.4E-07	mg/kg/day	NA	1/(mg/kg-day)	- -
	Cobalt	445	ug/L	445	ug/L	M	9.4E-06	mg/kg/day	NA	1/(mg/kg-day)	- -
	Nickel	868	ug/L	868	ug/L	M	3.7E-06	mg/kg/day	NA	1/(mg/kg-day)	- -
	Zinc	2280	ug/L	2280	ug/L	M	2.9E-05	mg/kg/day	NA	1/(mg/kg-day)	- -
	(Total)										5.1E-08
										Total of Routes	2.3E-05

TABLE 8.14
CALCULATION OF CANCER RISKS - ADULT RESIDENT TAP WATER CONTACT WITH SWMU 2 GROUNDWATER
CENTRAL TENDENCY EXPOSURE
NSWC CRANE
CRANE, INDIANA

Scenario Timeframe: Future
Medium: Ground Water
Exposure Medium: Ground Water
Exposure Point: Lower Pennslvanian Aquifer
Receptor Population: Resident
Receptor Age: Adult

Exposure Route	Chemical of Potential Concern	Medium EPC Value	Medium EPC Units	Route EPC Value	Route EPC Units	EPC Selected for Risk Calculation (1)	Intake (Cancer)	Intake (Cancer) Units	Cancer Slope Factor	Cancer Slope Factor Units	Cancer Risk
Ingestion	Aluminum	23300	ug/L	23300	ug/L	M	3.0E-02	mg/kg/day	NA	1/(mg/kg-day)	- -
	Arsenic	1.60	ug/L	1.60	ug/L	M	2.1E-06	mg/kg/day	1.5E+00	1/(mg/kg-day)	3.1E-06
	Beryllium	4.70	ug/L	4.70	ug/L	M	6.0E-06	mg/kg/day	NA	1/(mg/kg-day)	- -
	Cadmium	16.1	ug/L	16.1	ug/L	M	2.1E-05	mg/kg/day	NA	1/(mg/kg-day)	- -
	Cobalt	445.0	ug/L	445.0	ug/L	M	5.7E-04	mg/kg/day	NA	1/(mg/kg-day)	- -
	Nickel	868.0	ug/L	868.0	ug/L	M	1.1E-03	mg/kg/day	NA	1/(mg/kg-day)	- -
	Zinc	2280	ug/L	2280	ug/L	M	2.9E-03	mg/kg/day	NA	1/(mg/kg-day)	- -
	(Total)										3.1E-06
Dermal	Aluminum	23300	ug/L	23300	ug/L	M	6.4E-05	mg/kg/day	NA	1/(mg/kg-day)	- -
	Arsenic	1.60	ug/L	1.60	ug/L	M	4.4E-09	mg/kg/day	1.5E+00	1/(mg/kg-day)	6.6E-09
	Beryllium	4.70	ug/L	4.70	ug/L	M	1.3E-08	mg/kg/day	NA	1/(mg/kg-day)	- -
	Cadmium	16.1	ug/L	16.1	ug/L	M	4.4E-08	mg/kg/day	NA	1/(mg/kg-day)	- -
	Cobalt	445.0	ug/L	445.0	ug/L	M	1.2E-06	mg/kg/day	NA	1/(mg/kg-day)	- -
	Nickel	868.0	ug/L	868.0	ug/L	M	4.8E-07	mg/kg/day	NA	1/(mg/kg-day)	- -
	Zinc	2280	ug/L	2280	ug/L	M	3.8E-06	mg/kg/day	NA	1/(mg/kg-day)	- -
	(Total)										6.6E-09
										Total of Routes	3.1E-06

TABLE 8.15
CALCULATION OF CANCER RISKS - LIFETIME RESIDENT TAP WATER CONTACT WITH SWMU 2 GROUNDWATER
REASONABLE MAXIMUM EXPOSURE
NSWC CRANE
CRANE, INDIANA

Scenario Timeframe: Future
Medium: Ground Water
Exposure Medium: Ground Water
Exposure Point: Lower Pennsylvanian Aquifer
Receptor Population: Resident
Receptor Age: Child/Adult

Exposure Route	Chemical of Potential Concern	Medium EPC Value	Medium EPC Units	Route EPC Value	Route EPC Units	EPC Selected for Risk Calculation (1)	Intake (Cancer)	Intake (Cancer) Units	Cancer Slope Factor	Cancer Slope Factor Units	Cancer Risk
Ingestion	Aluminum	23300	ug/L	23300	ug/L	M	2.2E-01	mg/kg-day	--	1/(mg/kg-day)	--
	Arsenic	1.60	ug/L	1.60	ug/L	M	2.8E-05	mg/kg-day	1.5E+00	1/(mg/kg-day)	4.2E-05
	Beryllium	4.70	ug/L	4.70	ug/L	M	4.4E-05	mg/kg-day	--	1/(mg/kg-day)	--
	Cadmium	16.1	ug/L	16.1	ug/L	M	1.5E-04	mg/kg-day	--	1/(mg/kg-day)	--
	Cobalt	445	ug/L	445	ug/L	M	4.2E-03	mg/kg-day	--	1/(mg/kg-day)	
	Nickel	868	ug/L	868	ug/L	M	8.2E-03	mg/kg-day	--	1/(mg/kg-day)	--
	Zinc	2280	ug/L	2280	ug/L	M	2.1E-02	mg/kg-day	--	1/(mg/kg-day)	--
	(Total)										4.2E-05
Dermal	Aluminum	23300	ug/L	23300	ug/L	M	4.9E-04	mg/kg-day	--	1/(mg/kg-day)	--
	Arsenic	1.60	ug/L	1.60	ug/L	M	4.8E-08	mg/kg-day	1.5E+00	1/(mg/kg-day)	7.2E-08
	Beryllium	4.70	ug/L	4.70	ug/L	M	9.9E-08	mg/kg-day	--	1/(mg/kg-day)	--
	Cadmium	16.1	ug/L	16.1	ug/L	M	3.4E-07	mg/kg-day	--	1/(mg/kg-day)	--
	Cobalt	445	ug/L	445	ug/L	M	9.4E-06	mg/kg-day	--	1/(mg/kg-day)	
	Nickel	868	ug/L	868	ug/L	M	3.7E-06	mg/kg-day	--	1/(mg/kg-day)	--
	Zinc	2280	ug/L	2280	ug/L	M	1.3E-08	mg/kg-day	--	1/(mg/kg-day)	
	(Total)										7.2E-08
										Total of Routes	4.2E-05

TABLE 8.16
CALCULATION OF CANCER RISKS - LIFETIME RESIDENT TAP WATER CONTACT WITH SWMU 2 GROUNDWATER
CENTRAL TENDENCY EXPOSURE
NSWC CRANE
CRANE, INDIANA

Scenario Timeframe: Future
Medium: Ground Water
Exposure Medium: Ground Water
Exposure Point: Lower Pennslvanian Aquifer
Receptor Population: Resident
Receptor Age: Child/Adult

Exposure Route	Chemical of Potential Concern	Medium EPC Value	Medium EPC Units	Route EPC Value	Route EPC Units	EPC Selected for Risk Calculation (1)	Intake (Cancer)	Intake (Cancer) Units	Cancer Slope Factor	Cancer Slope Factor Units	Cancer Risk
Ingestion	Aluminum	23300	ug/L	23300	ug/L	M	3.0E-02	mg/kg-day	--	1/(mg/kg-day)	--
	Arsenic	1.60	ug/L	1.60	ug/L	M	3.3E-06	mg/kg-day	1.5E+00	1/(mg/kg-day)	5.0E-06
	Beryllium	4.70	ug/L	4.70	ug/L	M	6.0E-06	mg/kg-day	--	1/(mg/kg-day)	--
	Cadmium	16.1	ug/L	16.1	ug/L	M	2.1E-05	mg/kg-day	--	1/(mg/kg-day)	--
	Cobalt	445	ug/L	445	ug/L	M	5.7E-04	mg/kg-day	--	1/(mg/kg-day)	--
	Nickel	868	ug/L	868	ug/L	M	1.1E-03	mg/kg-day	--	1/(mg/kg-day)	--
	Zinc	2280	ug/L	2280	ug/L	M	2.9E-03	mg/kg-day	--	1/(mg/kg-day)	--
	(Total)										5.0E-06
Dermal	Aluminum	23300	ug/L	23300	ug/L	M	6.4E-05	mg/kg-day	--	1/(mg/kg-day)	--
	Arsenic	1.60	ug/L	1.60	ug/L	M	6.6E-09	mg/kg-day	1.5E+00	1/(mg/kg-day)	9.8E-09
	Beryllium	4.70	ug/L	4.70	ug/L	M	1.3E-08	mg/kg-day	--	1/(mg/kg-day)	--
	Cadmium	16.1	ug/L	16.1	ug/L	M	4.4E-08	mg/kg-day	--	1/(mg/kg-day)	--
	Cobalt	445	ug/L	445	ug/L	M	1.2E-06	mg/kg-day	--	1/(mg/kg-day)	--
	Nickel	868	ug/L	868	ug/L	M	4.8E-07	mg/kg-day	--	1/(mg/kg-day)	--
	Zinc	2280	ug/L	2280	ug/L	M	3.8E-06	mg/kg-day	--	1/(mg/kg-day)	--
	(Total)										9.8E-09
										Total of Routes	5.0E-06

TABLE 9.1
SUMMARY OF RECEPTOR RISKS AND HAZARDS FOR COPCs - ADULT CONSTRUCTION WORKERS EXPOSURE TO SWMU 2
REASONABLE MAXIMUM EXPOSURE
NSWC CRANE
CRANE, INDIANA

Scenario Timeframe: Current/Future
Receptor Population: Construction Workers
Receptor Age: Adult

Medium	Exposure Medium	Exposure Point	Chemical	Carcinogenic Risk				Chemical	Non-Carcinogenic Hazard Quotient				
				Ingestion	Inhalation	Dermal	Exposure Routes Total		Primary Target Organ	Ingestion	Inhalation	Dermal	Exposure Routes Total
Surface/ Subsurface Soil	Surface/ Subsurface Soil	SWMU 2 - Dye Burial Ground	Aluminum	--	--	--	--	Aluminum	Immunological/Nails	0.001	--	NA	0.001
			Arsenic	1.2E-08	--	7.3E-10	1.2E-08	Arsenic	Skin/CVS	0.002	--	0.0001	0.002
			Iron	--	--	--	--	Iron	Liver/Blood/GS	0.005	--	NA	0.005
			(Total)	1.2E-08	--	7.3E-10	1.2E-08	(Total)		0.008	--	0.0001	0.008
						Total Risk Across Soil	1.2E-08					Total Hazard Index Across Soil	0.008
						Total Risk Across All Media and All Exposure Routes	1.2E-08					Total Hazard Index Across All Media and All Exposure Routes	0.008

Total Blood HI =	0.005
Total CVS HI =	0.002
Total GS HI =	0.005
Total Immunological HI =	0.001
Total Liver HI =	0.005
Total Nails HI =	0.001
Total Skin HI =	0.002

TABLE 9.2
SUMMARY OF RECEPTOR RISKS AND HAZARDS FOR COPCs - ADULT CONSTRUCTION WORKERS EXPOSURE TO SWMU 2
CENTRAL TENDENCY EXPOSURE
NSWC CRANE
CRANE, INDIANA

Scenario Timeframe: Current/Future
Receptor Population: Construction Workers
Receptor Age: Adult

Medium	Exposure Medium	Exposure Point	Chemical	Carcinogenic Risk				Chemical	Non-Carcinogenic Hazard Quotient				
				Ingestion	Inhalation	Dermal	Exposure Routes Total		Primary Target Organ	Ingestion	Inhalation	Dermal	Exposure Routes Total
Soil	Soil	SWMU 2 - Dye Burial Ground	Aluminum	--	--	--	--	Aluminum	Immunological/Nails	0.0006	--	NA	0.0006
			Arsenic	5.9E-09	--	2.4E-10	6.1E-09	Arsenic	Skin/CVS	0.0009	--	0.00004	0.0009
			Iron	--	--	--	--	Iron	Liver/Blood/GS	0.002	--	NA	0.002
			(Total)	5.9E-09	--	2.4E-10	6.1E-09	(Total)		0.004	--	0.00004	0.004
						Total Risk Across Soil	6.1E-09					Total Hazard Index Across Soil	0.004
						Total Risk Across All Media and All Exposure Routes	6.1E-09					Total Hazard Index Across All Media and All Exposure Routes	0.004

Total Blood HI =	0.002
Total CVS HI =	0.0009
Total GS HI =	0.002
Total Immunological HI =	0.0006
Total Liver HI =	0.002
Total Nails HI =	0.0006
Total Skin HI =	0.0009

TABLE 9.3
SUMMARY OF RECEPTOR RISKS AND HAZARDS FOR COPCs - ADOLESCENT TRESPASSER EXPOSURE TO SWMU 2
REASONABLE MAXIMUM EXPOSURE
NSWC CRANE
CRANE, INDIANA

Scenario Timeframe: Current/Future
Receptor Population: Trespasser
Receptor Age: Adolescent

Medium	Exposure Medium	Exposure Point	Chemical	Carcinogenic Risk				Chemical	Non-Carcinogenic Hazard Quotient				
				Ingestion	Inhalation	Dermal	Exposure Routes Total		Primary Target Organ	Ingestion	Inhalation	Dermal	Exposure Routes Total
Sediment	Sediment	SWMU 2 - Dye Burial Ground	Manganese	--	--	--	--	Manganese	CNS	0.01	--	NA	0.01
			(Total)	--	--	--	--	(Total)		0.01	--	--	0.01
Surface Water	Surface Water	SWMU 2 - Dye Burial Ground	Aluminum	--	--	--	--	Aluminum	Immunological/Nails	0.00007	--	0.00002	0.00009
			Arsenic	1.3E-08	--	4.2E-09	1.7E-08	Arsenic	Skin/CVS	0.0002	--	0.00006	0.0002
			Iron	--	--	--	--	Iron	Liver/Blood/GS	0.0002	--	0.00006	0.0003
			(Total)	1.3E-08	--	4.2E-09	1.7E-08	(Total)		0.0004	--	0.0001	0.0006

Total Risk Across Sediment	--
Total Risk Across Surface Water	1.7E-08
Total Risk Across All Media and All Exposure Routes	1.7E-08

Total Hazard Index Across Sediment	0.01
Total Hazard Index Across Surface Water	0.0006
Total Hazard Index Across All Media and All Exposure Routes	0.02

Total Blood HI =	0.0003
Total CNS HI =	0.01
Total CVS HI =	0.0002

TABLE 9.4
SUMMARY OF RECEPTOR RISKS AND HAZARDS FOR COPCs - ADOLESCENT TRESPASSER EXPOSURE TO SWMU 2
CENTRAL TENDENCY EXPOSURE
NSWC CRANE
CRANE, INDIANA

Scenario Timeframe: Current/Future
Receptor Population: Trespasser
Receptor Age: Adolescent

Medium	Exposure Medium	Exposure Point	Chemical	Carcinogenic Risk				Chemical	Non-Carcinogenic Hazard Quotient				
				Ingestion	Inhalation	Dermal	Exposure Routes Total		Primary Target Organ	Ingestion	Inhalation	Dermal	Exposure Routes Total
Sediment	Sediment	SWMU 2 - Dye Burial Ground											
			Manganese	--	--	--	--	Manganese	CNS	0.004	--	NA	0.004
			(Total)	--	--	--	--	(Total)		0.004	--	--	0.004
Surface Water	Surface Water	SWMU 2 - Dye Burial Ground											
			Aluminum	--	--	--	--	Aluminum	Immunological/Nails	0.00002	--	0.000005	0.00002
			Arsenic	3.2E-09	--	9.9E-10	4.2E-09	Arsenic	Skin/CVS	0.00005	--	0.00001	0.00006
			Iron	--	--	--	--	Iron	Liver/Blood/GS	0.00005	--	0.00002	0.00006
			(Total)	3.2E-09	--	9.9E-10	4.2E-09	(Total)		0.0001	--	0.00003	0.0001

Total Risk Across Sediment	--
Total Risk Across Surface Water	4.2E-09
Total Risk Across All Media and All Exposure Routes	4.2E-09

Total Hazard Index Across Sediment	0.004
Total Hazard Index Across Surface Water	0.0001
Total Hazard Index Across All Media and All Exposure Routes	0.004

Total Blood HI =	0.00006
Total CNS HI =	0.004
Total CVS HI =	0.00006

TABLE 9.5
SUMMARY OF RECEPTOR RISKS AND HAZARDS FOR COPCs - ADULT RECREATIONAL USER EXPOSURE TO SWMU 2
REASONABLE MAXIMUM EXPOSURE
NSWC CRANE
CRANE, INDIANA

Scenario Timeframe: Future
Receptor Population: Recreational User
Receptor Age: Adult

Medium	Exposure Medium	Exposure Point	Chemical	Carcinogenic Risk				Chemical	Non-Carcinogenic Hazard Quotient				
				Ingestion	Inhalation	Dermal	Exposure Routes Total		Primary Target Organ	Ingestion	Inhalation	Dermal	Exposure Routes Total
Sediment	Sediment	SWMU 2 - Dye Burial Ground	Manganese	--	--	--	--	Manganese	CNS	0.009	--	NA	0.009
			(Total)	--	--	--	--	(Total)		0.009	--	--	0.009
Surface Water	Surface Water	SWMU 2 - Dye Burial Ground	Aluminum	--	--	--	--	Aluminum	Immunological/Nails	0.00005	--	0.000010	0.00006
			Arsenic	2.7E-08	--	4.9E-09	3.2E-08	Arsenic	Skin/CVS	0.0001	--	0.00003	0.0002
			Iron	--	--	--	--	Iron	Liver/Blood/GS	0.0001	--	0.00003	0.0002
			(Total)	2.7E-08	--	4.9E-09	3.2E-08	(Total)		0.0003	--	0.00006	0.0004
			Total Risk Across Sediment				--		Total Hazard Index Across Sediment				0.009
			Total Risk Across Surface Water				3.2E-08		Total Hazard Index Across Surface Water				0.0004
			Total Risk Across All Media and All Exposure Routes				3.2E-08		Total Hazard Index Across All Media and All Exposure Routes				0.009

Total Blood HI =	0.0002
Total CNS HI =	0.009
Total CVS HI =	0.0002

TABLE 9.6
SUMMARY OF RECEPTOR RISKS AND HAZARDS FOR COPCs - ADULT RECREATIONAL USER EXPOSURE TO SWMU 2
CENTRAL TENDENCY EXPOSURE
NSWC CRANE
CRANE, INDIANA

Scenario Timeframe: Future
Receptor Population: Recreational User
Receptor Age: Adult

Medium	Exposure Medium	Exposure Point	Chemical	Carcinogenic Risk				Chemical	Non-Carcinogenic Hazard Quotient				
				Ingestion	Inhalation	Dermal	Exposure Routes Total		Primary Target Organ	Ingestion	Inhalation	Dermal	Exposure Routes Total
Sediment	Sediment	SWMU 2 - Dye Burial Ground											
			Manganese	--	--	--	--	Manganese	CNS	0.002	--	NA	0.002
			(Total)	--	--	--	--	(Total)		0.002	--	--	0.002
Surface Water	Surface Water	SWMU 2 - Dye Burial Ground											
			Aluminum	--	--	--	--	Aluminum	Immunological/Nails	0.00003	--	0.000005	0.00003
			Arsenic	4.0E-09	--	7.3E-10	4.8E-09	Arsenic	Skin/CVS	0.00007	--	0.00001	0.00008
			Iron	--	--	--	--	Iron	Liver/Blood/GS	0.00007	--	0.00001	0.00009
			(Total)	4.0E-09	--	7.3E-10	4.8E-09	(Total)		0.0002	--	0.00003	0.0002

Total Risk Across Sediment	--
Total Risk Across Surface Water	4.8E-09
Total Risk Across All Media and All Exposure Routes	4.8E-09

Total Hazard Index Across Sediment	0.002
Total Hazard Index Across Surface Water	0.0002
Total Hazard Index Across All Media and All Exposure Routes	0.002

Total Blood HI =	0.00009
Total CNS HI =	0.002
Total CVS HI =	0.00008

TABLE 9.7
SUMMARY OF RECEPTOR RISKS AND HAZARDS FOR COPCs - CHILD RESIDENT EXPOSURE TO SWMU 2
REASONABLE MAXIMUM EXPOSURE
NSWC CRANE
CRANE, INDIANA

Scenario Timeframe: Future
Receptor Population: Resident
Receptor Age: Child

Medium	Exposure Medium	Exposure Point	Chemical	Carcinogenic Risk				Chemical	Non-Carcinogenic Hazard Quotient				
				Ingestion	Inhalation	Dermal	Exposure Routes Total		Primary Target Organ	Ingestion	Inhalation	Dermal	Exposure Routes Total
Ground Water	Ground Water	Lower Pennsylvanian Aquifer	Aluminum	- -	- -	- -	- -	Aluminum	Body Weight	2.2	--	0.002	2.2
			Arsenic	1.97E-05	- -	2.17E-08	1.97E-05	Arsenic	Skin, CVS	0.5	--	0.0006	0.5
			Beryllium	- -	- -	- -	- -	Beryllium	GS	0.2	--	0.04	0.3
			Cadmium	- -	- -	- -	- -	Cadmium	Kidney	3.1	--	0.07	3.2
			Cobalt	- -	- -	- -	- -	Cobalt	CVS, Immune	2.1	--	0.002	2.1
			Nickel	- -	- -	- -	- -	Nickel	Body Weight	4.2	--	0.02	4.2
			Zinc	- -	- -	- -	- -	Zinc	Blood	0.7	--	0.0005	0.7
			(Total)	2.0E-05	- -	2.2E-08	2.0E-05	(Total)		13	--	0.1	13
						Total Risk Across Groundwater	2.0E-05					Total Hazard Index Across All Media and All Exposure Routes	13
						Total Risk Across All Media and All Exposure Routes	2.0E-05					Total Hazard Index Across All Media and All Exposure Routes	13

Total Body Weight HI	6.4
Total CVS HI	2.6
Total Kidney HI	3.2
Total Skin HI	0.5
Total Blood HI	0.7
Total GS HI	0.3
Total Immune HI	2.1

TABLE 9.8
SUMMARY OF RECEPTOR RISKS AND HAZARDS FOR COPCs - CHILD RESIDENT EXPOSURE TO SWMU 2
CENTRAL TENDENCY EXPOSURE
NSWC CRANE
CRANE, INDIANA

Scenario Timeframe: Future
Receptor Population: Resident
Receptor Age: Child

Medium	Exposure Medium	Exposure Point	Chemical	Carcinogenic Risk			
				Ingestion	Inhalation	Dermal	Exposure Routes Total
Ground Water	Ground Water	Lower Pennsylvanian Aquifer	Aluminum	- -	- -	- -	- -
			Arsenic	1.93E-06	- -	3.23E-09	1.94E-06
			Beryllium	- -	- -	- -	- -
			Cadmium	- -	- -	- -	- -
			Cobalt	- -	- -	- -	- -
			Nickel	- -	- -	- -	- -
			Zinc	- -	- -	- -	- -
			(Total)	1.9E-06	- -	3.2E-09	1.9E-06
			Total Risk Across Groundwater				1.9E-06
			Total Risk Across All Media and All Exposure Routes				1.9E-06

Chemical	Non-Carcinogenic Hazard Quotient				
	Primary Target Organ	Ingestion	Inhalation	Dermal	Exposure Routes Total
Aluminum	Body Weight	0.7	- -	0.001	0.7
Arsenic	Skin, CVS	0.2	- -	0.0003	0.2
Beryllium	GS	0.07	- -	0.02	0.08
Cadmium	Kidney	0.9	- -	0.03	0.9
Cobalt	CVS, Immune	0.6	- -	0.001	0.6
Nickel	Body Weight	1.2	- -	0.01	1.2
Zinc	Blood	0.2	- -	0.0002	0.2
(Total)		3.8	- -	0.06	3.9
Total Hazard Index Across All Media and All Exposure Routes					3.9
Total Hazard Index Across All Media and All Exposure Routes					3.9

Total Body Weight HI	1.9
Total CVS HI	0.8
Total Kidney HI	0.9
Total Skin HI	0.2
Total Blood HI	0.2
Total GS HI	0.08
Total Immune HI	0.6

TABLE 9.9
SUMMARY OF RECEPTOR RISKS AND HAZARDS FOR COPCs - ADULT RESIDENT EXPOSURE TO SWMU 2
REASONABLE MAXIMUM EXPOSURE
NSWC CRANE
CRANE, INDIANA

Scenario Timeframe: Future
Receptor Population: Resident
Receptor Age: Adult

Medium	Exposure Medium	Exposure Point	Chemical	Carcinogenic Risk				Chemical	Non-Carcinogenic Hazard Quotient				
				Ingestion	Inhalation	Dermal	Exposure Routes Total		Primary Target Organ	Ingestion	Inhalation	Dermal	Exposure Routes Total
Ground Water	Ground Water	Lower Pennsylvanian Aquifer	Aluminum	- -	- -	- -	- -	Aluminum	Body Weight	0.6	- -	0.001	0.6
			Arsenic	2.25E-05	- -	5.07E-08	2.26E-05	Arsenic	Skin, CVS	0.1	- -	0.0003	0.1
			Beryllium	- -	- -	- -	- -	Beryllium	GS	0.06	- -	0.02	0.09
			Cadmium	- -	- -	- -	- -	Cadmium	Kidney	0.9	- -	0.04	0.9
			Cobalt	- -	- -	- -	- -	Cobalt	CVS, Immune	0.6	- -	0.001	0.6
			Nickel	- -	- -	- -	- -	Nickel	Body Weight	1.2	- -	0.01	1.2
			Zinc	- -	- -	- -	- -	Zinc	Blood	0.2	- -	0.0003	0.2
			(Total)	2.25E-05	- -	5.07E-08	2.26E-05	(Total)		3.7	- -	0.08	3.8
						Total Risk Across Groundwater	2.26E-05					Total Hazard Index Across All Media and All Exposure Routes	3.8
						Total Risk Across All Media and All Exposure Routes	2.26E-05					Total Hazard Index Across All Media and All Exposure Routes	3.8

Total Body Weight HI	1.8
Total CVS HI	0.8
Total Kidney HI	0.9
Total Skin HI	0.1
Total Blood HI	0.2
Total GS HI	0.09
Total Immune HI	0.6

TABLE 9.10
SUMMARY OF RECEPTOR RISKS AND HAZARDS FOR COPCs - ADULT RESIDENT EXPOSURE TO SWMU 2
CENTRAL TENDENCY EXPOSURE
NSWC CRANE
CRANE, INDIANA

Scenario Timeframe: Future
Receptor Population: Resident
Receptor Age: Adult

Medium	Exposure Medium	Exposure Point	Chemical	Carcinogenic Risk				Chemical	Non-Carcinogenic Hazard Quotient				
				Ingestion	Inhalation	Dermal	Exposure Routes Total		Primary Target Organ	Ingestion	Inhalation	Dermal	Exposure Routes Total
Ground Water	Ground Water	Lower Pennsylvanian Aquifer	Aluminum	- -	- -	- -	- -	Aluminum	Body Weight	0.3	- -	0.0006	0.3
			Arsenic	3.08E-06	- -	6.61E-09	3.08E-06	Arsenic	Skin, CVS	0.07	- -	0.0001	0.07
			Beryllium	- -	- -	- -	- -	Beryllium	GS	0.03	- -	0.009	0.04
			Cadmium	- -	- -	- -	- -	Cadmium	Kidney	0.4	- -	0.02	0.4
			Cobalt	- -	- -	- -	- -	Cobalt	CVS, Immune	0.3	- -	0.0006	0.3
			Nickel	- -	- -	- -	- -	Nickel	Body Weight	0.6	- -	0.006	0.6
			Zinc	- -	- -	- -	- -	Zinc	Blood	0.10	- -	0.0001	0.10
			(Total)	3.08E-06	- -	6.61E-09	3.08E-06	(Total)		1.7	- -	0.03	1.8
						Total Risk Across Groundwater	3.08E-06					Total Hazard Index Across All Media and All Exposure Routes	1.8
						Total Risk Across All Media and All Exposure Routes	3.08E-06					Total Hazard Index Across All Media and All Exposure Routes	1.8

Total Body Weight HI	0.9
Total CVS HI	0.4
Total Kidney HI	0.4
Total Skin HI	0.07
Total Blood HI	0.10
Total GS HI	0.04
Total Immune HI	0.3

TABLE 9.11
SUMMARY OF RECEPTOR RISKS AND HAZARDS FOR COPCs - LIFETIME RESIDENT EXPOSURE TO SWMU 2
REASONABLE MAXIMUM EXPOSURE
NSWC CRANE
CRANE, INDIANA

Scenario Timeframe: Future
Receptor Population: Resident
Receptor Age: Child/Adult

Medium	Exposure Medium	Exposure Point	Chemical	Carcinogenic Risk				Chemical	Non-Carcinogenic Hazard Quotient				
				Ingestion	Inhalation	Dermal	Exposure Routes Total		Primary Target Organ	Ingestion	Inhalation	Dermal	Exposure Routes Total
Ground Water	Ground Water	Lower Pennsylvanian Aquifer	Aluminum	--	--	--	--	Aluminum	N/A	N/A	--	N/A	--
			Arsenic	4.23E-05	--	7.24E-08	4.23E-05	Arsenic	N/A	N/A	--	N/A	--
			Beryllium	--	--	--	--	Beryllium	N/A	N/A	--	N/A	--
			Cadmium	--	--	--	--	Cadmium	N/A	N/A	--	N/A	--
			Cobalt	--	--	--	--	Cobalt	N/A	N/A	--	N/A	--
			Nickel	--	--	--	--	Nickel	N/A	N/A	--	N/A	--
			Zinc	--	--	--	--	Zinc	N/A	N/A	--	N/A	--
			(Total)	4.23E-05	--	7.24E-08	4.23E-05	(Total)		--	--	--	--
						Total Risk Across Groundwater	4.23E-05					Total Hazard Index Across Groundwater	--
						Total Risk Across All Media and All Exposure Routes	4.23E-05					Total Hazard Index Across All Media and All Exposure Routes	--

TABLE 9.12
SUMMARY OF RECEPTOR RISKS AND HAZARDS FOR COPCs - LIFETIME RESIDENT EXPOSURE TO SWMU 2
CENTRAL TENDENCY EXPOSURE
NSWC CRANE
CRANE, INDIANA

Scenario Timeframe: Future
Receptor Population: Resident
Receptor Age: Child/Adult

Medium	Exposure Medium	Exposure Point	Chemical	Carcinogenic Risk				Chemical	Non-Carcinogenic Hazard Quotient				
				Ingestion	Inhalation	Dermal	Exposure Routes Total		Primary Target Organ	Ingestion	Inhalation	Dermal	Exposure Routes Total
Ground Water	Ground Water	Lower Pennsylvanian Aquifer	Aluminum	- -	- -	- -	- -	Aluminum	N/A	N/A	--	N/A	--
			Arsenic	3.08E-06	- -	6.61E-09	3.08E-06	Arsenic	N/A	N/A	--	N/A	--
			Beryllium	- -	- -	- -	- -	Beryllium	N/A	N/A	--	N/A	--
			Cadmium	- -	- -	- -	- -	Cadmium	N/A	N/A	--	N/A	--
			Cobalt	- -	- -	- -	- -	Cobalt	N/A	N/A	--	N/A	--
			Nickel					Nickel	N/A	N/A	--	N/A	--
			Zinc	- -	- -	- -	- -	Zinc	N/A	N/A	--	N/A	--
			(Total)	3.08E-06	- -	6.61E-09	3.08E-06	(Total)		--	--	--	--
			Total Risk Across Groundwater				5.02E-06		Total Hazard Index Across Groundwater				--
			Total Risk Across All Media and All Exposure Routes				5.02E-06		Total Hazard Index Across All Media and All Exposure Routes				--

APPENDIX H

SUPPORTING MATERIALS FOR THE ECOLOGICAL RISK ASSESSMENT

H.1 Chemical Toxicity Information

H.2 Receptor Profiles

H.3 Toxicity Reference Values

H.4 Food Chain Model Calculations

H.5 Ecological Assessment Checklist

APPENDIX H.1

CHEMICAL TOXICITY INFORMATION

APPENDIX H.1

This appendix presents a discussion of the different chemical classes that were detected at SWMU 2 but not limited to, potential sources, toxicity information, and bioaccumulation potential.

METALS

Many metals are found naturally in the surface water, sediment, and/or soil at various concentrations due primarily to chemical weathering and fallout from volcanoes. Most metals are toxic to aquatic (i.e., fish, invertebrates) and terrestrial (i.e., plants, invertebrates, vertebrates) ecological receptors at certain concentrations, with some metals being toxic at lower concentrations than others. Also, different chemical forms of the metals may be more toxic than other forms. For example, hexavalent chromium is typically more toxic than trivalent chromium, and methylmercury is more toxic than inorganic mercury. In addition, the toxicity of several metals (cadmium, chromium, copper, lead, nickel, silver, and zinc) to aquatic receptors in freshwater systems decreases with increasing water hardness.

Only a portion of the total bulk concentration of metals in soils is bioavailable to ecological receptors. The uptake and accumulation of trace elements by plants are affected by several soil factors such as pH, Eh, clay content, organic matter content, cation exchange capacity, nutrient balance, concentration of other trace elements in soil, soil moisture, and temperature (Tarradellas et al., 1996). The bioavailability of the metals, however, is not known because there are other soil factors that influence uptake.

Many of these same factors also will influence the bioavailability of metals to invertebrates in sediment. One way to estimate the bioavailable portion of certain divalent metals (cadmium, copper, lead, nickel, and zinc) in sediment is to measure the amount of acid volatile sulfides (AVS) and simultaneously extracted metals (SEM) in a sediment sample. If the molar concentration of AVS is higher than the molar concentration of SEM, than all the SEM metals are expected to be unavailable to aquatic invertebrates and, therefore, nontoxic. AVS plays little or no role in determining interstitial water concentrations of metals in aerobic systems or those with low productivity (i.e., where the absence of organic carbon limits sulfate reduction) (Ankley et al., 1996), or when ingestion of sediments is the primary exposure route (Lee et al., 2000).

Of the 29 elements essential for plant growth, seven are micronutrients, including copper, iron, manganese, and zinc (Tarradellas et al., 1996). Also, the following metals may stimulate plant growth but are only essential for some plant species: aluminum, cobalt, nickel, sodium, selenium, and vanadium

(Tarradellas et al., 1996). Finally, some elements such as lead, cadmium, and mercury are toxic elements with no known function in plant metabolism (Tarradellas et al., 1996).

ORNL (1998b) has calculated soil-to-plant uptake factors for several metals based on a compilation of various studies. Cadmium, mercury, selenium, and zinc were the only metals (except for calcium and potassium) with mean uptake factors greater than one (1.02 to 2.25). None of the metals (except for calcium and potassium) have median uptake factors greater than one. Arsenic, cadmium, mercury, nickel, selenium, and zinc were the only metals (except for calcium, magnesium, and potassium) with upper 90th percentile uptake factors greater than one (1.1 to 5) (ORNL, 1998b). This indicates that most metals will not biomagnify in plants. Finally, it is reported that for arsenic, copper, nickel, and zinc the plant-based food chain may be protected because the toxic concentrations of these metals in plants are higher than those for animals; cadmium and selenium are not toxic to plants at high concentrations and may be accumulated in plants at levels that may be toxic to animals (Cockerham and Shane, 1994). Other metals such as lead, cobalt and mercury can enter the food chain via plant uptake, but to a lesser extent (Cockerham and Shane, 1994).

Cadmium appears to accumulate in most species of earthworms at greater levels than any other metal (Satchell, 1983). This is supported by the high mean soil-to-plant uptake factor of 17 for cadmium, compared to mean uptake factors of 5.7 (zinc), 5.2 (mercury), 4.5 (silver), and 3.3 (lead) (Sample et al., 1998a). The remaining metals (except potassium, sodium, and some radionuclides) had mean uptake factors of 1.8 or less (Sample et al., 1998a). Cadmium, mercury, nickel, silver, and zinc are the only metals with median uptake factors greater than one (Sample et al., 1998a). The upper 90th percentile uptake factors were 40.7, 20.6, 15.3, and 12.9 for cadmium, mercury, silver, and zinc (Sample et al., 1998a). The remaining metals had upper 90th percentile uptake factors of 4.7 or less (Sample et al., 1998a).

APPENDIX H.2

RECEPTOR PROFILES

APPENDIX H.2

The following sections present the receptor profiles for the meadow vole, American robin, northern bobwhite quail, short-tailed shrew, raccoon, belted kingfisher, and little brown bat. Note that based on the COPCs, food chain modeling was not conducted for the raccoon, kingfisher, or bat. The majority of the information for the profiles was obtained from the Wildlife Exposure Factors Handbook (USEPA, 1993). The data for the incidental soil ingestion rates were obtained from the Estimates of Soil Ingestion by Wildlife (Beyer, 1993) except for the shrew data, which was in Talmage and Walton (undated). The exposure parameters that were selected for this SERA work plan are based on animals collected in or near southern Indiana, when available.

The food and water ingestion rate are presented in g/g (of body weight)-day on a wet weight basis. The home ranges for all species are presented in hectares in USEPA (1993), but were converted to acres in this work plan by multiplying the number of hectares by 2.471. The only exception is the kingfisher's range, which is presented in kilometer (km) of shoreline. Also note that the estimated percent of soil in the diets are listed in dry weight, while the other exposure factors are in wet weight. The soil dry weight was not converted to a wet weight in this work plan because the percent moisture of the soils is not known. Also, incidental soil ingestion is only a small portion of the overall diet (2.0 to 13 percent).

Tables H.2-1 and H.2-2 present the calculation of the exposure parameters. Note that in these tables the ingestion rates in kg/day (or L/day) for the conservative scenario was calculated by multiply the maximum ingestion rate in g/g-day by the average body weight, while the ingestion rates in kg/day (or L/day) for the average scenario was calculated by multiplying the average ingestion rate in g/g-day by the average body weight. Typically, a minimum body weight is used in the conservative models. However, using the minimum body weight to calculate the maximum ingestion rate sometimes causes the conservative ingestion rate to be lower than the average ingestion rate. Therefore, the average body weight was selected to ensure that the ingestion rate for the conservative scenario was higher than the ingestion rate for the average scenario. The minimum body weight will be used in the dose equation for the conservative scenario. The only exceptions to this were for the food ingestion rate for the raccoon, and the water ingestion rates for the shrew, robin, and kingfisher. Because only one ingestion rate was available, the maximum body weights were used to calculate the conservative ingestion rates and the average body weights were used to calculate the average ingestion rates.

Meadow Vole (*Microtus pennsylvanicus*)

Meadow voles inhabit grassy fields, marshes, and bogs; however, they prefer fields with more grass, more cover, and fewer woody plants. They typically consume green succulent vegetation, sedges,

seeds, roots, bark, fungi, insects, and animal matter. Green succulent vegetation makes up the majority of their diet.

The adult body weight for the vole in southern Indiana ranged from 0.0329 to 0.0391 kg with an average of 0.0366 kg. The only listed food ingestion rates were for voles in Russia, which ranged from 0.30 to 0.35 g/g-day, with an average of 0.325 g/g-day. The water ingestion rates are 0.14 (estimated) and 0.21 g/g-day, with an average of 0.175 g/g-day. Finally, the incidental soil ingestion rate was calculated by multiplying the ingestion rate by the percentage of soil that is incidentally ingested (2.4 percent) from Beyer (1993).

The home range for the meadow vole was calculated using data from a Michigan old field. The values ranged from 0.0297 to 1.06 acres with an average home range of 0.164 acres.

American Robin (*Turdus migratorius*)

American robins inhabit parks, lawns, moist forest, swamps, open woodland, and orchards. Robins forage on the ground in open areas, along habitat edges, or the edges of streams. They also may forage above ground in shrubs and within the lower branches of trees. In the months proceeding and during the breeding season, robins feed primarily on invertebrates and on some fruits. During the rest of the year their diet consists primarily of fruits.

The adult body weight for the American robin in New York woodlands and forests, and in Pennsylvania ranged from 0.0773 to 0.0862 kg with an average of 0.081 kg. The only listed food ingestion rates were for robins in Kansas (1.52 g/g-day) and California (0.89 g/g-day), with an average of 1.205 g/g-day. The water ingestion rate was estimated as 0.14 g/g-day. The incidental soil ingestion rate was calculated by multiplying the ingestion rate by the percentage of soil that is incidentally ingested (10.4 percent for a woodcock) from Beyer (1993).

The home range for the robin was calculated using data from an Ontario forest. The values ranged from 0.37 to 2 acres with an average home range of 1.19 acres.

Northern Bobwhite Quail (*Colinus virginianus*)

Quails inhabit grasslands, idle fields, pastures, and large clumps of grasses. Bobwhites forage in areas with open vegetation, some bare ground, and light litter. Seeds from weeds, woody plants, and grasses comprise the majority of an adult's diet, although green vegetation has been found to dominate their diet in winter in the south.

The adult body weight for the bobwhite quail in southern Illinois agricultural areas ranged from 0.162 to 0.1855 kg with an average of 0.177 kg. The listed food ingestion rates are for quails in Kansas and Texas lab studies, and in a captive study from Massachusetts. The values ranged from 0.067 to 0.093 g/g-day, with an average of 0.082 g/g-day. The water ingestion rate was estimated as 0.10 and 0.11 g/g-day, and measured in a Texas lab (0.86 to 0.131 g/g-day), for an average water ingestion rate of 0.104 g/g-day. The incidental soil ingestion rate is calculated by multiplying the food ingestion rate by the percentage of soil that is incidentally ingested (8.2 percent for a Canada goose) from Beyer (1993).

The home range for the quail was calculated using data from southern Illinois idle farms, woods, brush, and cornfields. The values for individuals ranged from 15.8 to 41.3 acres with an average home range of 28.6 acres.

Short-Tailed Shrew (*Blarina brevicauda*)

Shrews inhabit a wide variety of habitats and are common in areas with abundant vegetative cover. They need cool, moist habitats because of their high metabolic and water-loss rates. The short-tailed shrew is primarily carnivorous, eating insects such as earthworms, slugs, and snails.

The adult body weight for the short-tailed shrew in various Pennsylvania habitats ranged from 0.01525 to 0.01921 kg with an average of 0.01687 kg. The listed food ingestion rates are for shrews in labs in Ohio (0.49 g/g-day), Wisconsin (0.43 to 0.96 g/g-day), and Virginia (0.541 g/g-day), with an average of 0.61 g/g-day. The water ingestion rate was determined as 0.223 g/g-day in an Illinois laboratory. The incidental soil ingestion rate was calculated by multiplying the ingestion rate by the percentage of soil that is incidentally ingested (13 percent) from Talmage and Walton (undated).

The home range for the shrew was calculated using data from a tamarak bog in Manitoba (only value available). The value was 0.9699 acres.

Raccoon (*Procyon lotor*)

Raccoons are found near virtually every aquatic habitat, particularly in hardwood swamps, mangroves, floodplain forests, and freshwater and saltwater marshes. They are also common in suburban residential areas. They use surface waters for both drinking and foraging. They feed primarily on fleshy fruits, nuts, acorns, and corn, but also eat grains, insects, frogs, crayfish, eggs, and virtually any animal and vegetable matter.

The adult body weights based on data from Illinois, range from 5.34 to 8.86 kg, with an average of 6.865 kg. The average food ingestion rate of 0.3347 kg/day was calculated using the average body weight and the following equation from U.S. EPA (1993):

$$FI = (0.0687)\ (BW^{0.822})$$

Where: FI = Food ingestion rate (kg/day)
BW = Body weight in kg

The range of water ingestion rates is listed as 0.082 to 0.083 g/g-day. The incidental soil ingestion rate is calculated by multiplying the ingestion rate by the percentage of soil that is incidentally ingested (0.094), as presented in Beyer (1993).

Based on data from Michigan, home range sizes for the raccoon are from 266.9 to 504.1 acres for an average home range of 385.5 acres.

Belted Kingfisher *(Ceryle alcyon)*

Belted kingfishers are typically found along rivers, streams, and the edges of lakes and ponds. They are also common along seacoasts and estuaries. They prefer water that is free of thick vegetation and overhanging trees that obscure the view of the water. Because kingfishers eat primarily fish that swim near the surface or in shallow water, they require relatively clear water to see and catch their prey. Although kingfishers feed predominantly on fish, they have been known to consume crayfish, crabs, mussels, lizards, frogs, toads, small snakes, turtles, insects, salamanders, newts, young birds, mice, and berries.

Based on data from Michigan, Pennsylvania, Ohio, and Minnesota, the adult body weights range from 0.136 to 0.170 kg, with an average of 0.152 kg. The listed food ingestion rates, based on data from Michigan, range from 0.41 to 0.5 g/g-day. The water ingestion rate is estimated as 0.11 g/g-day. The incidental soil ingestion rate was calculated by multiplying the ingestion rate by the percentage of soil that is incidentally ingested (2 percent), based on the mallard data presented in Beyer (1993).

The home range for the kingfisher are from 0.39 to 2.185 km of shoreline, based on data from streams in Pennsylvania and Ohio.

Little Brown Bat (*Myotis lucifugus*)/Indiana Bat (*Myotis sodalis*)

This receptor profile discusses both the Indiana bat and the Little Brown Bat. Although the Indiana bat is a Federally-listed endangered species, the Little Brown Bat is used as a surrogate species for the Indiana Bat because exposure parameters (e.g., ingestion rates) are available for the Little Brown Bat. Note that the home range discussed in the last paragraph of this section is for the Indiana Bat, since this is really the species of concern.

The Indiana Bat hibernates during winter in caves and abandoned mines, and then migrates to summer roosts, which are generally in hardwood forests adjacent to streams and lakes (USDA, 1998). The most important characteristic of trees chosen as roost sites is not species, but structure. Bats choose trees with exfoliating bark that allows space for them to roost between the bark and the bole of the tree. The length and persistence of peeling bark varies with the species of tree and the severity of environmental factors to which it is subjected (USFWS, 1999). Indiana Bats weigh 4.5 to 9.5 grams and are approximately 7.6 to 8.9 cm n length (USDA, 1998). Indiana Bats are strict insectivores, and eat nuisance and pest insects such as alfalfa weevils and gypsy moths (USDA, 1998). Both aquatic and terrestrial insects are consumed. Diet varies seasonally and variation is observed among different ages, sexes, and reproductive-status groups (USFWS, 1999).

Little Brown Bats inhabit open areas, with strategic day, night, and hibernacula roosting sites in hollow trees, buildings, caves, and abandoned mines. They avoid areas with dense vegetation and other obstructions to flight. Like the Indiana Bat, Little Brown Bats are strict insectivores. Insects are generally captured in flight, or taken from the surface of water or vegetation. They forage primarily in open habitat, flood plain pastures, and frequently over bodies of water. Foraging along forest edges has also been observed (Sample et al., 1997).

The adult body weight of the Little Brown Bat in Indiana ranged from 6.03 to 10.27 grams, with an average weight of 7.2 grams. The only listed food ingestion rates for bats in New Hampshire ranged from 0.23 to 1.12 g/g-day, with an average of 0.61 g/g-day. The water ingestion rates ranges from 0.177 to 0.205 g/g-day with an average of 0.191 g/g-day. Because bats are aerial insectivores, soil ingestion is assumed to be negligible.

The extent of the foraging area used by an Indiana bat maternal colony has been reported to range from a linear strip of creek vegetation 0.8 km in length to a foraging area of 1.2 km in length (USFWS, 1999).

This page intentionally left blank.

TABLE H.2-1

EXPOSURE PARAMETERS FOR TEST SPECIES AND SURROGATE WILDLIFE SPECIES
SWMU 2 - DYE BURIAL GROUND
NSWC CRANE
CRANE, INDIANA

Species	Body Weight (kg)			Food Ingestion Rate (kg/day)		Water Ingestion Rate (L/day)		Soil/Sediment Ingestion Rate (kg/day)		Home Range (acres) [8]		
	Avg.	Min.	Max.	Avg.	Conserv.	Avg.	Conserv.	Avg.	Conserv.	Avg.	Min.	Max.
Potential Test Species[1]												
Rat[2]	0.35	NA	NA	NA		NA		NA		NA		
Old field mouse[3]	0.014	NA	NA	NA		NA		NA		NA		
Mouse[2]	0.03	NA	NA	NA		NA		NA		NA		
Rabbit	3.8	NA	NA	NA		NA		NA		NA		
Mink[4]	1	NA	NA	NA		NA		NA		NA		
Rhesus monkey[4]	5	NA	NA	NA		NA		NA		NA		
Beagle[2]	10	NA	NA	NA		NA		NA		NA		
Surrogate Wildlife Species [6]												
Bobwhite Quail	0.177	0.162	0.1855	0.0144	0.0164	0.0184	0.0231	0.001181	0.001345	28.6	15.8	41.3
American Robin	0.081	0.0773	0.0862	0.0976	0.1231	0.0113	0.0121	0.01015	0.012802	1.19	0.37	2
Short-Tailed Shrew	0.01687	0.01525	0.01921	0.0103	0.0162	0.0038	0.0043	0.001339	0.002106	0.97	0.97	0.97
Meadow Vole	0.03663	0.0329	0.0391	0.0119	0.0128	0.0064	0.0077	0.000286	0.000307	0.03	0.164	1.06
Raccoon	6.865	5.34	8.86	0.3347	0.4128	0.5664	0.5698	0.031462	0.038803	385.5	266.9	504.1
Belted Kingfisher	0.152	0.136	0.17	0.0689	0.0758	0.0167	0.0187	0.001378	0.001516	1.16	0.39	2.19
Little Brown Bat[7]	0.0072	0.006	0.0103	0.0044	0.0081	0.0014	0.0015	NA	NA	1	0.8	1.2

Notes:
See Table H.2-2 for the source of calculation of the exposure factors
NA - Not Applicable
1 - Only one value was provided so it was placed in the average column and some generic body weights may have been replaced by study-specific body weights
2 - USEPA, 1998
3 - Silva and Downing, 1995
4 - USEPA, 1993
5 - Barsotti et al, 1976
6 - USEPA, 1993 for all factors except soil ingestion; Beyer (1993) or Talmage and Walton (in press) for soil ingestion rates
7 - All of the exposure parameters are for the Little Brown Bat except for the home range, which is for the Indiana Bat.
8 - Home range for the kingfisher and Indiana Bat is presented in kilometers of shoreline.

TABLE H.2-2

CALCULATION OF EXPOSURE PARAMETERS FOR WILDLIFE RECEPTORS
SWMU 2 - DYE BURIAL GROUND
NSWC CRANE
CRANE, INDIANA

Exposure Parameters	Meadow Vole		Short-Tailed Shrew		Little Brown Bat	American Robin	Bobwhite Quail		Raccoon		Belted Kingfisher
Body Weights (g)	32.9	35.5	17.61	16.87	6.15	77.3	180	181	7090	6160	150
	39.1	39	17.33	15.58	6.15	80.8	168	183	7140	6440	136
			19.21	15.7	6.03	86.2	162	179	7600	5340	158
			17.4	15.25	6.99	83.6	175	175	6000	5620	147
					10.27	77.4	178	183.2	6400	8860	148
					7.77	80.6	179	185.5	7740	7560	170
							180	173	6560	7600	
							162.8	180.4			
Minimum	***32.9***		***15.25***		***6.03***	***77.3***	***162***		***5340***		***136***
Maximum	***39.1***		***19.21***		***10.27***	***86.2***	***185.5***		***8860***		***170***
Average	***36.63***		***16.87***		***7.2***	***81.0***	***177***		***6865***		***152***
Food Ingestion Rate (g/g-day) [1]	0.3	0.35	0.49	0.77	1.12	0.89	0.067	0.079			0.5
			0.62	0.55	0.23	1.52	0.072	0.093			0.41
			0.43	0.96	0.48		0.09	0.089			
			0.52	0.54							
Minimum	***0.3***		***0.43***		***0.23***	***0.89***	***0.067***				***0.41***
Maximum	***0.35***		***0.96***		***1.12***	***1.52***	***0.093***				***0.5***
Average	***0.325***		***0.61***		***0.61***	***1.205***	***0.082***				***0.455***
Food Ingestion Rate (kg/day)											
Conservative	***0.0128***		***0.0162***		***0.0081***	***0.1231***	***0.0164***		***0.4128***		***0.0758***
Average	***0.0119***		***0.0103***		***0.0044***	***0.0976***	***0.0144***		***0.3347***		***0.0689***
Water Ingestion Rate (g/g-day)	0.14	0.21	0.223		0.177	0.14	0.115	0.1	0.082	0.083	0.11
					0.205		0.106	0.131			
							0.093	0.101			
							0.086	0.102			
							0.11	0.1			
Minimum	***0.14***		***0.223***		***0.177***	***0.14***	***0.086***		***0.082***		***0.11***
Maximum	***0.21***		***0.223***		***0.205***	***0.14***	***0.131***		***0.083***		***0.11***
Average	***0.175***		***0.223***		***0.191***	***0.14***	***0.104***		***0.083***		***0.110***
Water Ingestion Rate (L/day)											
Conservative	***0.0077***		***0.0043***		***0.0015***	***0.0121***	***0.0231***		***0.5698***		***0.0187***
Average	***0.0064***		***0.0038***		***0.0014***	***0.0113***	***0.0184***		***0.5664***		***0.0167***
Home Range (Ha) [2]	0.43	0.097	0.3925		0.80	0.15	7.6	6.4	204	108	2.185
	0.019	0.041			1.20	0.81	16.7	15.6			1.028
	0.013	0.033									1.03
	0.012	0.013									0.39
	0.043	0.057									
	0.023	0.032									
	0.051	0.078									
	0.058	0.061									
Minimum (acres)[2]	***0.0297***		***0.97***		***0.80***	***0.37***	***15.8***		***266.9***		***0.39***
Maximum (acres)[2]	***1.06***		***0.97***		***1.20***	***2.00***	***41.3***		***504.1***		***2.19***
Average (acres)[2]	***0.164***		***0.97***		***1.00***	***1.19***	***28.6***		***385.5***		***1.16***

Notes:
Source of data is USEPA, 1993 except for the Little Brown Bat.
Source of the Little Brown Bat data is Sample et al., 1997 except for the home range, which is USFWS, 1999.
1 - Food Ingestion Rate (kg/day) for the raccoon was calculated using the following equation:
$FI = (0.0687)(BW^{0.822})$, where FI = Food Ingestion Rate (kg/day) and BW = Body Weight (kg).
2 - Home range for the kingfisher and Indiana Bat is presented in kilometers of shoreline.
Ingestion Rates (kg/day or L/day) (if more than 1 ingestion rate is available)
- Conservative value = Max. Ingestion Rate (g/g-day)* Avg. Body Weight
- Average value = Avg. Ingestion Rate (g/g-day)*Avg. Body Weight

Ingestion Rates (L/day) (if only 1 ingestion rate is available)
- Conservative value = Ingestion Rate (g/g-day)* Max. Body Weight
- Average value = Ingestion Rate (g/g-day)*Avg. Body Weight

APPENDIX H.3

TOXICITY REFERENCE VALUES

TABLE H.3-1

SOIL AND SEDIMENT UPTAKE FACTORS
SWMU 2 - DYE BURIAL GROUND
NSWC CRANE
CRANE, INDIANA

Chemicals	Plant Uptake Factors[1,2]		Earthworm Uptake Factors[3]		Fish Uptake Factors[3]		Mammal Uptake Factors[3]		SD Invert Uptake Factors[3]	
	Conservative[4]	Average[4]	Conservative[4]	Average[4]	Conservative[4]	Average[4]	Conservative[4]	Average[4]	Conservative[4]	Average[4]
Inorganics										
Copper	1.88E-01	3.72E-02	2.45E-01	8.24E-02	1.00E+00	1.00E+00	1.00E+00	1.00E+00	1.52E+00	4.51E-01

Notes:
1 - ORNL (2000) for organics; only one value is available for conservative and average exposures
2 - Sample et al., (1997) for inorganics; conservative value is 90th percentile; average value is median value
3 - Sample et al., (1998b) for all chemicals; conservative value is 90th percentile; average value is median value
4 - Conservative and average refers to the exposure scenarios for which the uptake factors are used
The plant and invertebrate uptake factors from Sample (1997 and 1998) were multiplied by 0.3 and 0.16 to convert the uptake factors for plants and earthworms, respectively, from dry weight to wet weight

Default value of 1 is assigned to parameters without uptake factors

TABLE H.3-2

DERIVATIONS OF TRVS
SWMU 2 - DYE BURIAL GROUND
NSWC CRANE
CRANE, INDIANA

MAXIMUM BODY WEIGHT

Parameter	Mammals				Short-tailed Shrew		Meadow Vole		Raccoon		Brown Bat	
	NOAEL	LOAEL	Test Species	Body Weight (kg)	NOAEL	LOAEL	NOAEL	LOAEL	NOAEL	LOAEL	NOAEL	LOAEL
Copper	11.71	15.14	mink	1	31.5	40.7	26.3	34.0	6.8	8.8	36.8	47.5

Notes:

Derivation NOAEL/LOAEL Equation:

Derived NOAEL = NOAEL*(test species bw/surrogate species maximum body weight)$^{0.25}$
Derived LOAEL = LOAEL*(test species bw/surrogate species maximum body weight)$^{0.25}$

Maximum body weight for surrogate wildlife species can be found in Table H.2-1.

AVERAGE BODY WEIGHT

Parameter	Mammals				Short-tailed Shrew		Meadow Vole		Raccoon		Brown Bat	
	NOAEL	LOAEL	Test Species	Body Weight (kg)	NOAEL	LOAEL	NOAEL	LOAEL	NOAEL	LOAEL	NOAEL	LOAEL
Copper	11.71	15.14	mink	1	32.5	42.0	26.8	34.6	7.2	9.4	40.2	52.0

Notes:

Derivation NOAEL/LOAEL Equation:

Derived NOAEL = NOAEL*(test species bw/surrogate species average body weight)$^{0.25}$
Derived LOAEL = LOAEL*(test species bw/surrogate species average body weight)$^{0.25}$

Average body weight for surrogate wildlife species can be found in Table H.2-1.

TABLE H.3-3

SOURCES AND ENDPOINTS FOR NOAELS AND LOAELS FOR TERRESTRIAL WILDLIFE
SWMU 2 - DYE BURIAL GROUND
NSWC CRANE
CRANE, INDIANA

Parameters	Concentration (mg/kd-day)	Endpoint	Effect	Chronic/ Subchronic	Species	Primary Reference	Source of Reference
Copper	11.71	NOAEL	reproduction	chronic	mink	Aulerich et al., 1982	Sample et.al., 1996
Copper	15.14	LOAEL	reproduction	chronic	mink	Aulerich et al., 1982	Sample et.al., 1996
Copper	46.97	NOAEL	mortality	chronic	chicks	Mehring et al., 1960	Sample et.al., 1996
Copper	61.72	LOAEL	mortality	chronic	chicks	Mehring et al., 1960	Sample et.al., 1996

APPENDIX H.4

FOOD CHAIN MODEL CALCULATIONS

Body Weight = (BW)	0.0329000 kg	Dose=[(If*Cv+Is*Cs+Iw*Cw)H]/BW	**Meadow Vole**
Food Ingestion Rate = (If)	0.0128000 kg/day		
Water Ingestion Rate = (Iw)	0.0077000 L/day	Cs = Contaminant concentration in soil	
Soil Ingestion Rate = (Is)	0.0003070 kg/day	Cw = Contaminant concentration in water	
Home Range = (HR)	Assume 100% on site	Cv = Contaminant conc. in vegetation (=soil conc. * Biotransfer Factor)	
Contaminated Area = (CA)	Assume equal to home range	H=HR/CA (Assume = to 1 for maximum exposure)	

SWMU 02 Dye Burial Ground
TERRESTRIAL WILDLIFE MODEL ECOLOGICAL EFFECTS QUOTIENT CALCULATION
MEADOW VOLE - CONSERVATIVE INPUTS
NSWC CRANE, INDIANA

Parameter	Max Soil Concentration (mg/kg)	Max SW Concentration (mg/L)	Biotransfer Factor (soil to veg.)	Vegetation Concentration (mg/kg)	Dose (mg/kg/day)	NOAEL (mg/kg/day)	LOAEL (mg/kg/day)	NOAEL EEQn	LOAEL EEQl
Inorganics									
COPPER	1.02E+01	0.00E+00	1.88E-01	1.92E+00	8.42E-01	2.99E+02	3.87E+02	2.81E-03	2.17E-03

Cells are shaded if the EEQ is greater than 1.0.

Definitions:
EEQ - Ecological Effects Quotient
NOAEL - No Observed Adverse Effects Level
LOAEL - Lowest Observed Adverse Effects Level

Body Weight = (BW)	0.0152500 kg	
Food Ingestion Rate = (If)	0.0162000 kg/day	
Water Ingestion Rate = (Iw)	0.0043000 L/day	
Soil Ingestion Rate = (Is)	0.0021060 kg/day	
Home Range = (HR)	Assume 100% on site	
Contaminated Area = (CA)	Assume equal to home range	

Dose=[(If*Ci+Is*Cs+Iw*Cw)H]/BW

Short-Tailed Shrew

Cs = Contaminant concentration in soil
Cw = Contaminant concentration in water
Ci = Contaminant conc. in soil invertebrates (=soil conc. * Biotransfer Factor)
H=HR/CA (Assume = to 1 for maximum exposure)

SWMU 02 Dye Burial Ground
TERRESTRIAL WILDLIFE MODEL ECOLOGICAL EFFECTS QUOTIENT CALCULATION
SHORT-TAILED SHREW - CONSERVATIVE INPUTS
NSWC CRANE, INDIANA

Parameter	Max Soil Concentration (mg/kg)	Max SW Concentration (mg/L)	Biotransfer Factor (soil to inv.)	Invertebrate Concentration (mg/kg)	Dose (mg/kg/day)	NOAEL (mg/kg/day)	LOAEL (mg/kg/day)	NOAEL EEQn	LOAEL EEQl
Inorganics									
COPPER	1.02E+01	0.00E+00	2.45E-01	2.51E+00	4.07E+00	6.10E+02	7.88E+02	6.68E-03	5.17E-03

Cells are shaded if the EEQ is greater than 1.0.

Definitions:
EEQ - Ecological Effects Quotient
NOAEL - No Observed Adverse Effects Level
LOAEL - Lowest Observed Adverse Effects Level

Body Weight = (BW)	7.730E-02	kg	Dose=[(Il*Ci+Is*Cs+Iw*Cw)H]/BW	**American Robin**
Food Ingestion Rate = (Il)	1.231E-01	kg/day		
Water Ingestion Rate = (Iw)	1.210E-02	L/day	Cs = Contaminant concentration in soil	
Soil Ingestion Rate = (Is)	1.280E-02	kg/day	Cw = Contaminant concentration in water	
Home Range = (HR)	Assume 100% on site		Ci = Contaminant conc. in soil invertebrates (=soil conc. * Biotransfer Factor)	
Contaminated Area = (CA)	Assume equal to home range		H=HR/CA (Assume = to 1 for maximum exposure)	

SWMU 02 Dye Burial Ground
TERRESTRIAL WILDLIFE MODEL ECOLOGICAL EFFECTS QUOTIENT CALCULATION
AMERICAN ROBIN - CONSERVATIVE INPUTS
NSWC CRANE, INDIANA

Parameter	Max Soil Concentration (mg/kg)	Max SW Concentration (mg/L)	Biotransfer Factor (soil to inv.)	Invertebrate Concentration (mg/kg)	Dose (mg/kg/day)	NOAEL (mg/kg/day)	LOAEL (mg/kg/day)	NOAEL EEQn	LOAEL EEQl
Inorganics									
COPPER	1.02E+01	0.00E+00	2.45E-01	2.51E+00	5.68E+00	4.70E+01	6.17E+01	1.21E-01	9.21E-02

Cells are shaded if the EEQ is greater than 1.0.

Definitions:
EEQ - Ecological Effects Quotient
NOAEL - No Observed Adverse Effects Level
LOAEL - Lowest Observed Adverse Effects Level

Body Weight = (BW)	0.1620000 kg	
Food Ingestion Rate = (If)	0.0164000 kg/day	
Water Ingestion Rate = (Iw)	0.0231000 L/day	
Soil Ingestion Rate = (Is)	0.0013450 kg/day	
Home Range = (HR)	Assume 100% on site	
Contaminated Area = (CA)	Assume equal to home range	

Dose=[(If*Cv+Is*Cs+Iw*Cw)H]/BW

Bobwhite Quail

Cs = Contaminant concentration in soil
Cw = Contaminant concentration in water
Cv = Contaminant conc. in vegetation (=soil conc. * Biotransfer Factor)
H=HR/CA (Assume = to 1 for maximum exposure)

SWMU 02 Dye Burial Ground
TERRESTRIAL WILDLIFE MODEL ECOLOGICAL EFFECTS QUOTIENT CALCULATION
BOBWHITE QUAIL - CONSERVATIVE INPUTS
NSWC CRANE, INDIANA

Parameter	Max Soil Concentration (mg/kg)	Max SW Concentration (mg/L)	Biotransfer Factor (soil to veg.)	Vegetation Concentration (mg/kg)	Dose (mg/kg/day)	NOAEL (mg/kg/day)	LOAEL (mg/kg/day)	NOAEL EEQn	LOAEL EEQl
Inorganics									
COPPER	1.02E+01	0.00E+00	1.88E-01	1.92E+00	2.79E-01	4.70E+01	6.17E+01	5.94E-03	4.52E-03

Cells are shaded if the EEQ is greater than 1.0.

Definitions:
EEQ - Ecological Effects Quotient
NOAEL - No Observed Adverse Effects Level
LOAEL - Lowest Observed Adverse Effects Level

APPENDIX H.5

ECOLOGICAL ASSESSMENT CHECKLIST

Checklist for Ecological Assessment/Sampling

I. SITE DESCRIPTION

1. Site Name: NSWC CRANE

   Location: SWMU 2 - DYE BURIAL GROUND

   County: MARTIN City: CRANE State: INDIANA

2. Latitude: ~38°47'N Longitude: ~86°45'W

3. What is the approximate area of the site? 12.4 ACRES

4. Is this the first site visit? ☒ yes ☐ no If no, attach trip report of previous site visit(s), if available.

   Date(s) of previous site visit(s): _____.

5. Please attach to the checklist USGS topographic map(s) of the site, if available.

   SEE FIGURE 1-3 OF the NSWC CRANE, SWMU 2 RCRA RFI REPORT of April 2002.

6. Are aerial or other site photographs available? ☒ yes ☐ no If yes, please attach any available photo(s) to the site map at the conclusion of this section.

   SEE FIGURES 1-13, 14 & 15 OF the NSWC CRANE, SWMU 2 RCRA RFI REPORT OF APRIL 2002.

7. The land use on the site is:

_____% Urban

_____% Rural

_____% Residential

3.2 % Industrial (☒ light ☐ heavy)

_____% Agricultural

(Crops: _____*)*

_____% Recreational

(Describe; note if it is a park, etc.)

_____

_____

62.9 % ~~Undisturbed~~ FORESTED

33.9 % Other - OPEN LAND MAINTAINED GRASS

The area surrounding the site is:

_____ mile radius

_____% Urban

_____% Rural

_____% Residential

15 % ~~Industrial (☒ light ☐ heavy)~~ & GRASS

_____% Agricultural

(Crops: _____*)*

_____% Recreational

(Describe; note if it is a park, etc.)

_____

_____

85 % Undisturbed FORESTED

_____% Other

8. Has any movement of soil taken place at the site? ☐ yes ☐ no. If yes, please identify the most likely cause of this disturbance:

_____ Agricultural Use	X Heavy Equipment	_____ Mining
X Natural Events	X Erosion	_____ Other

Please describe:

STEEP SLOPES - HEAVY RAINS MAY CAUSE SOME EROSION toward Little SULFUR CREEK

HEAVY EQ - PAST OPERATIONS OF burial ground, CAP INSTALLATION

9. Do any potentially sensitive environmental areas exist adjacent to or in proximity to the site, e.g., Federal and State parks, National and State monuments, wetlands, prairie potholes? *Remember, flood plains and wetlands are not always obvious; do not answer "no" without confirming information.*

No

Please provide the source(s) of information used to identify these sensitive areas, and indicate their general location on the site map.

NA

10. What type of facility is located at the site?

☐ Chemical ☐ Manufacturing ☐ Mixing ☐ Waste disposal

☒ Other (specify) Dye Burial Ground

11. What are the suspected contaminants of concern at the site? If known, what are the maximum concentration levels?

Dyes & Metals

12. Check any potential routes of off-site migration of contaminants observed at the site:

☒ Swales ☐ Depressions ☒ Drainage ditches

☒ Runoff ☐ Windblown particulates ☐ Vehicular traffic

☐ Other (specify)

13. If known, what is the approximate depth to the water table? ~ 25' BGS

14. Is the direction of surface runoff apparent from site observations? ☒ yes ☐ no If yes, to which of the following does the surface runoff discharge? Indicate all that apply.

☒ Surface water ☐ Groundwater ☐ Sewer ☐ Collection impoundment

↳ Little Sulfur Creek

15. Is there a navigable waterbody or tributary to a navigable waterbody? ☐ yes ☒ no

16. Is there a waterbody anywhere on or in the vicinity of the site? If yes, also complete Section III: Aquatic Habitat Checklist -- Non-Flowing Systems and/or Section IV: Aquatic Habitat Checklist -- Flowing Systems.

☒ yes (approx. distance 1300 ft) ☐ no

17. Is there evidence of flooding? ☐ yes ☑ no *Wetlands and flood plains are not always obvious; do not answer "no" without confirming information.* If yes, complete Section V: Wetland Habitat Checklist.

Steep Gradient → flows to Little Sulfur Creek - No standing water on site

18. If a field guide was used to aid any of the identifications, please provide a reference. Also, estimate the time spent identifying fauna. [Use a blank sheet if additional space is needed for text.]

NA

19. Are any threatened and/or endangered species (plant or animal) known to inhabit the area of the site? ☐ yes ☐ no *If yes, you are required to verify this information with the U.S. Fish and Wildlife Service.* If species' identities are known, please list them next.

The Indiana Bat has been observed on NSWC Crane, Although not @ the DBG.

20. Record weather conditions at the time this checklist was prepared:

DATE: 3-11-02

33-44°F Temperature (°C/°F) 52.6 Normal daily high temperature Source: Martin Co. Soil Survey

South Wind (direction/speed) None Precipitation (rain, snow)

Clear Cloud cover

IA. SUMMARY OF OBSERVATIONS AND SITE SETTING

Light industry comprises 3.2% (0.4 acres) of SWMU 2 and consists of magazine 1518, and a gravel road that accesses the site and boarders the east side of the capped area. Open land comprises 33.9% of SWMU 2 and consists of 4.2 acres of maintained grass on and around the dye burial cap. And the remaining 62.9% (7.8 acres) of SWMU 2 is forested. The forested area, although it makes up a large portion of the SWMU, only occurs along the perimeter of the Dye Burial Ground. Oaks, in the 6 – 12" dbh class, make up the dominant species in the tree canopy, with hickories as associate species - some scattered pines were also observed.

SWMU 2 is relatively flat but ultimately drains to the south. The cap is elevated ~5-6' above the natural terrain with a diversion ditch/swale along the east side of the cap - vegetated with dense grass. This ditch/swale is connected to two drainage systems (intermittent streams) one to the north and one to the south; however, both drainage systems flow toward two separate unnamed tributaries of Little Sulfur Creek which flows southwest of the Dye Burial Ground (SWMU 2). Little Sulfur Creek flows into Sulfur Creek, which in turn flows into Indian Creek, which discharges into East Fork White River.

At the time of this assessment no flow was observed on site. The occurrence of aquatic receptors (i.e. fish, and sediment invertebrates) would be unlikely. Surface water flow would probably only occur during extended periods of heavy rain and spring thaw. Furthermore, this site is an upland site well outside of FEMAs flood hazard area (Zone A). Additionally, Martin County soil survey considers this a poor site for wetland plants.

White-tailed deer tracks were observed on-site.

See 1998 aerial photograph (Figure 1-13), the marked up SWMU 2 base map showing the location and direction of site photographs (Figure 1-14) and site photographs (Figure 1-15) in the NSWC Crane SWMU 2 RCRA RFI Report dated April 2002 to enhance site familiarity.

Completed by TERRY ROJAHN Affiliation T+ NUS

Additional Preparers JoEllen Hinck & Keith Simpson

Site Manager U.S. NAVY

Date 3-11-02

II. TERRESTRIAL HABITAT CHECKLIST

IIA. WOODED

1. Are there any wooded areas at the site? ☒ yes ☐ no If no, go to Section IIB: Shrub/Scrub.

2. What percentage or area of the site is wooded? (62.9 % 12.4 acres). Indicate the wooded area on the site map which is attached to a copy of this checklist. Please identify what information was used to determine the wooded area of the site.

3. What is the dominant type of vegetation in the wooded area? (Circle one: Evergreen/Deciduous/ Mixed) Provide a photograph, if available.

   → Evergreens sparce

   Dominant plant, if known: OAKS

4. What is the predominant size of the trees at the site? Use diameter at breast height.

   ☐ 0-6 in. ☒ 6-12 in. ☐ > 12 in.

5. Specify type of understory present, if known. Provide a photograph, if available.

   Understory sparse - small saplings etc.

IIB. SHRUB/SCRUB

1. Is shrub/scrub vegetation present at the site? ☐ yes ☒ no If no, go to Section IIC: Open Field.

2. What percentage of the site is covered by scrub/shrub vegetation? (_____% _____ acres). Indicate the areas of shrub/scrub on the site map. Please identify what information was used to determine this area.

3. What is the dominant type of scrub/shrub vegetation, if known? Provide a photograph, if available.

4. What is the approximate average height of the scrub/shrub vegetation?

   ☐ 0-2 ft. ☐ 2-5 ft. ☐ > 5 ft.

5. Based on site observations, how dense is the scrub/shrub vegetation?

☐ Dense ☐ Patchy ☐ Sparse

IIC. OPEN FIELD

1. Are there open (bare, barren) field areas present at the site? ☒ yes ☐ no If yes, please indicate the type below:

☐ Prairie/plains ☐ Savannah ☐ Old field ☒ Other (specify) Maintained Grass ON & AROUND DBG CAP

2. What percentage of the site is open field? (33.9 % 4.2 acres). Indicate the open fields on the site map.

3. What is/are the dominant plant(s)? Provide a photograph, if available.

GRASS spp.

4. What is the approximate average height of the dominant plant? < 6"

5. Describe the vegetation cover: ☒ Dense ☐ Sparse ☐ Patchy

IID. MISCELLANEOUS

1. Are other types of terrestrial habitats present at the site, other than woods, scrub/shrub, and open field? ☐ yes ☒ no If yes, identify and describe them below.

2. Describe the terrestrial miscellaneous habitat(s) and identify these area(s) on the site map.

3. What observations, if any, were made at the site regarding the presence and/or absence of insects, fish, birds, mammals, etc.?

4. Review the questions in Section I to determine if any additional habitat checklists should be completed for this site.

III. AQUATIC HABITAT CHECKLIST -- NON-FLOWING SYSTEMS

Note: *Aquatic systems are often associated with wetland habitats. Please refer to Section V, Wetland Habitat Checklist.*

1. What type of open-water, non-flowing system is present at the site? NA

   ☐ Natural (pond, lake)
   ☐ Artificially created (lagoon, reservoir, canal, impoundment)

2. If known, what is the name(s) of the waterbody(ies) on or adjacent to the site?

   _____

3. If a waterbody is present, what are its known uses (e.g.: recreation, navigation, etc.)?

4. What is the approximate size of the waterbody(ies)? _____ acre(s).

5. Is any aquatic vegetation present? ☐ yes ☐ no If yes, please identify the type of vegetation present if known.

   ☐ Emergent ☐ Submergent ☐ Floating

6. If known, what is the depth of the water? _____

7. What is the general composition of the substrate? Check all that apply.

   ☐ Bedrock ☐ Sand (coarse) ☐ Muck (fine/black)
   ☐ Boulder (>10 in.) ☐ Silt (fine) ☐ Debris
   ☐ Cobble (2.5-10 in.) ☐ Marl (shells) ☐ Detritus
   ☐ Gravel (0.1-2.5 in.) ☐ Clay (slick) ☐ Concrete
   ☐ Other (specify)_____

8. What is the source of water in the waterbody?

   ☐ River/Stream/Creek ☐ Groundwater ☐ Other (specify)_____
   ☐ Industrial discharge ☐ Surface runoff

9. Is there a discharge from the site to the waterbody? ☐ yes ☐ no If yes, please describe this discharge and its path.

10. Is there a discharge from the waterbody? ☐ yes ☐ no If yes, and the information is available, identify from the list below the environment into which the waterbody discharges.

☐ River/Stream/Creek	☐ onsite	☐ offsite	Distance_____
☐ Groundwater	☐ onsite	☐ offsite	
☐ Wetland	☐ onsite	☐ offsite	Distance_____
☐ Impoundment	☐ onsite	☐ offsite	

11. Identify any field measurements and observations of water quality that were made. For those parameters for which data were collected provide the measurement and the units of measure below:

_____ Area

_____ Depth (average)

_____ ~~Temperature (depth of the water at which the reading was taken)~~ _____

_____ pH

_____ Dissolved oxygen

_____ Salinity

_____ Turbidity (clear, slightly turbid, turbid, opaque) (Secchi disk depth _____)

_____ Other (specify)

12. Describe observed color and area of coloration.

13. Mark the open-water, non-flowing system on the site map attached to this checklist.

14. What observations, if any, were made at the waterbody regarding the presence and/or absence of benthic macroinvertebrates, fish, birds, mammals, etc.?

IV. AQUATIC HABITAT CHECKLIST – FLOWING SYSTEMS

Note: *Aquatic systems are often associated with wetland habitats. Please refer to Section V, Wetland Habitat Checklist.*

1. What type(s) of flowing water system(s) is (are) present at the site?

☐ River ☐ Stream ☐ Creek
☐ Dry wash ☐ Arroyo ☐ Brook
☒ Artificially created (ditch, etc.) ☒ Intermittent Stream ☐ Channeling
☐ Other (specify)_____

All Dry @ time of Assessment

2. If known, what is the name of the waterbody? Nearest Named stream >1300' off site Little Sulfur Creek

3. For natural systems, are there any indicators of physical alteration (e.g., channeling, debris, etc.)?
☒ yes ☐ no If yes, please describe indicators that were observed.

Drainage ditches / swales & culverts to divert run-off of surface water to unnamed intermittent streams.

4. What is the general composition of the substrate? Check all that apply.

☐ Bedrock ☒ Sand (coarse) ☐ Muck (fine/black)
☐ Boulder (>10 in.) ☒ Silt (fine) ☐ Debris
☐ Cobble (2.5-10 in.) ☐ Marl (shells) ☐ Detritus
☐ Gravel (0.1-2.5 in.) ☒ Clay (slick) ☐ Concrete
☐ Other (specify)_____

5. What is the condition of the bank (e.g., height, slope, extent of vegetative cover)?

Ht = < 2'
Slope = Gentle on site, to steep off site
Veg = Grass - dense cover

6. Is the system influenced by tides? ☐ yes ☒ no What information was used to make this determination?

7. Is the flow intermittent? ☒ yes ☐ no If yes, please note the information that was used in making this determination.

Dry @ time of Assessment

8. Is there a discharge from the site to the waterbody? ☐ yes ☐ no If yes, please describe the discharge and its path.

Flow on site most likely to occur during periods of heavy rain or spring thaw

Nearest named stream → Little Sulfur Creek south of DBG.

9. Is there a discharge from the waterbody? ☐ yes ☐ no If yes, and the information is available, please identify what the waterbody discharges to and whether the discharge is on site or off site.

Little Sulfur Creek → Sulfur Creek → Indian Creek → East Fork White River

10. Identify any field measurements and observations of water quality that were made. For those parameters for which data were collected, provide the measurement and the units of measure in the appropriate space below:

(See #7)

_____ Width (ft.)

_____ Depth (ft.)

_____ Velocity (specify units): _____

_____ Temperature (depth of the water at which the reading was taken _____)

_____ pH

_____ Dissolved oxygen

_____ Salinity

_____ Turbidity (clear, slightly turbid, turbid, opaque)
(Secchi disk depth _____)

_____ Other (specify) _____

11. Describe observed color and area of coloration.

SEE #7

12. Is any aquatic vegetation present? ☐ yes ☒ no If yes, please identify the type of vegetation present, if known.

☐ Emergent ☐ Submergent ☐ Floating

13. Mark the flowing water system on the attached site map.

14. What observations were made at the waterbody regarding the presence and/or absence of benthic macroinvertebrates, fish, birds, mammals, etc.?

No Standing H_2O - PRESENCE OF MICROINVERTEBRATES OR fish highly unlikely.

V. WETLAND HABITAT CHECKLIST

1. Based on observations and/or available information, are designated or known wetlands definitely present at the site?
   ☐ yes ☒ no

   Please note the sources of observations and information used (e.g., USGS Topographic Maps, National Wetland Inventory, Federal or State Agency, etc.) to make this determination.

2. Based on the location of the site (e.g., along a waterbody, in a floodplain) and site conditions (e.g., standing water; dark, wet soils; mud cracks; debris line; water marks), are wetland habitats suspected?
   ☐ yes ☐ no If yes, proceed with the remainder of the wetland habitat identification checklist.

3. What type(s) of vegetation are present in the wetland?

   ☐ Submergent ☐ Emergent
   ☐ Scrub/Shrub ☐ Wooded

   ☐ Other (specify)_____

4. Provide a general description of the vegetation present in and around the wetland (height, color, etc.). Provide a photograph of the known or suspected wetlands, if available.

5. Is standing water present? ☐ yes ☐ no If yes, is this water: ☐ Fresh ☐ Brackish
   What is the approximate area of the water (sq. ft.)?_____
   Please complete questions 4, 11, 12 in Checklist III - Aquatic Habitat -- Non-Flowing Systems.

6. Is there evidence of flooding at the site? What observations were noted?

   ☐ Buttressing ☐ Water marks ☐ Mud cracks

   ☐ Debris line ☐ Other (describe below)

7. If known, what is the source of the water in the wetland?

☐ Stream/River/Creek/Lake/Pond ☐ Groundwater

☐ Flooding ☐ Surface Runoff

8. Is there a discharge from the site to a known or suspected wetland? ☐ yes ☐ no If yes, please describe.

9. Is there a discharge from the wetland? ☐ yes ☐ no. If yes, to what waterbody is discharge released?

☐ Surface Stream/River ☐ Groundwater ☐ Lake/Pond ☐ Marine

10. If a soil sample was collected, describe the appearance of the soil in the wetland area. Circle or write in the best response.

Color (blue/gray, brown, black, mottled) _____

Water content (dry, wet, saturated/unsaturated) _____

11. Mark the observed wetland area(s) on the attached site map.

FIGURE 1-15

SITE PHOTOGRAPHS (03-11-02)
SWMU 2 - DYE BURIAL GROUNDS
NSWC CRANE, INDIANA

Photograph 1 - shows the access road to the Dye Burial Ground (DBG) and the highest point of the site - the wooded area left of photograph.

Photograph 2 - showing the north end of the DBG cap (left side of photo) and intermittent stream within the wooded area left of monitoring well ballards.

FIGURE 1-15

SITE PHOTOGRAPHS (03-11-02)
SWMU 2 - DYE BURIAL GROUNDS
NSWC CRANE, INDIANA

Photograph 3 - showing the north end of the DBG cap. A drainage ditch/swale is located between the cap and gravel road (left side of photo) and runs under (via a culvert) the small section of gravel above the access road at which point flow is diverted toward the intermittent stream shown in photograph 2.

Photograph 4 - showing the east side of the DBG cap with drainage ditches/swales (one running between the cap and gravel road, and one shown just left of the photograph's center and below the wooded area).

FIGURE 1-15

SITE PHOTOGRAPHS (03-11-02)
SWMU 2 - DYE BURIAL GROUNDS
NSWC CRANE, INDIANA

Photograph 5 - showing underground drainage pipe (bottom of photo) just east of monitoring well 02-08 with the DBG cap in the background. The pipe diverts flow from between the gravel road and DBG cap toward the intermittent stream in the wooded area south of cap.

Photograph 6 - shows the intermittent stream in wooded area just south of the underground drainage pipe shown in photograph 5.

FIGURE 1-15

SITE PHOTOGRAPHS (03-11-02)
SWMU 2 - DYE BURIAL GROUNDS
NSWC CRANE, INDIANA

Photograph 7 - taken from the south end of the DBG cap showing the road to well cluster 02-11 with monitoring well 02-02 on the right of the photo.

Photograph 8 - taken from the south end of the DBG cap showing the area north of the cap which would ultimately drain toward the Ammunition Burning Grounds (ABG).

FIGURE 1-15

SITE PHOTOGRAPHS (03-11-02)
SWMU 2 - DYE BURIAL GROUNDS
NSWC CRANE, INDIANA

Photograph 9 - taken from the north end of the DBG cap showing the area north of the cap where sheet runoff would ultimately flow in the direction of the ABG via tributary to Little Sulfur Creek and the intermittent stream shown in photograph 2.