N00164.AR.001197
NSA CRANE
5090.3a

FINAL SAMPLING AND ANALYSIS PLAN FOR SOLID WASTE MANAGEMENT UNIT 26
HIGHWAY 58 DUMP SITE B NSA CRANE iN
4/1/2011
NAVFAC MIDWEST

Comprehensive Long-term Environmental Action Navy

CONTRACT NUMBER N62470-08-D-1001

Sampling and Analysis Plan

FINAL

for

SWMU 26 – Highway 58 Dump Site B

Naval Support Activity Crane
Crane, Indiana

Contract Task Order F27H

April 2011

Revision 0

Naval Facilities Engineering Command
Midwest
201 Decatur Avenue
Building 1A, Code EV
Great Lakes, Illinois 60088

TETRA TECH NUS, Inc.

SAP Worksheet No. 1 -- Title and Approval Page
(UFP-QAPP Manual Section 2.1)

FINAL
SAMPLING AND ANALYSIS PLAN
(Field Sampling Plan and Quality Assurance Project Plan)
April 2011

RESOURCE CONSERVATION AND RECOVERY ACT FACILITY INVESTIGATION

SWMU 26 – Highway 58 Dump Site B
NAVAL SUPPORT ACTIVITY CRANE
CRANE, INDIANA

Prepared for:
Naval Facilities Engineering Command Midwest
201 Decatur Ave., Building 1A
Great Lakes, Illinois 60088

Prepared by:
Tetra Tech NUS, Inc.
234 Mall Boulevard, Suite 260
King of Prussia, PA 19406-2954
610-491-9688

Prepared under:
Contract No. N62470-08-D-1001
Contract Task Order F27H

Review Signatures:

T. E. Johnston 4-12-2011
Tom Johnston, PhD/CLEAN QAM/Date
Tetra Tech NUS, Inc.

Anthony P. Klimek 4/12/11
Anthony P. Klimek, P.E./Project Manager/Date
Tetra Tech NUS, Inc.

Approval Signatures:

Thomas J. Brent/ RPM/ Date
NSA Crane Environmental Restoration Site Manager

Doug Griffin/ RPM/ Date
Indiana Department of Environmental Management

Navy Chemist/ Date

SAP Worksheet No. 1 -- Title and Approval Page
(UFP-QAPP Manual Section 2.1)

DRAFT FINAL
SAMPLING AND ANALYSIS PLAN
(Field Sampling Plan and Quality Assurance Project Plan)
March~~January~~ 2011

RESOURCE CONSERVATION AND RECOVERY ACT
FACILITY INVESTIGATION

SWMU 26 – Highway 58 Dump Site B
NAVAL SUPPORT ACTIVITY CRANE
CRANE, INDIANA

Prepared for:
Naval Facilities Engineering Command Midwest
201 Decatur Ave., Building 1A
Great Lakes, Illinois 60088

Prepared by:
Tetra Tech NUS, Inc.
234 Mall Boulevard, Suite 260
King of Prussia, PA 19406-2954
610-491-9688

Prepared under:
Contract No. N62470-08-D-1001
Contract Task Order F27H

Review Signatures:

Tom Johnston, PhD/CLEAN QAM/Date
Tetra Tech NUS, Inc.

Anthony P. Klimek ~~02/04/11~~

Anthony P. Klimek, P.E./Project Manager/Date
Tetra Tech NUS, Inc.

Approval Signatures:

Thomas J. Brent/ RPM/ Date
NSA Crane Environmental Restoration Site Manager

Doug Griffin/ RPM/ Date
Indiana Department of Environmental Management

NIELSEN.JANICE.L.1069943540 Digitally signed by NIELSEN.JANICE.L.1069943540 DN: c=US, o=U.S. Government, ou=DoD, ou=PKI, ou=USN, cn=NIELSEN.JANICE.L.1069943540 Date: 2011.03.18 04:07:20 -04'00'

Navy Chemist/ Date

EXECUTIVE SUMMARY

Tetra Tech NUS, Inc. (Tetra Tech) has prepared this Sampling and Analysis Plan (SAP) for the Resource Conservation and Recovery Act (RCRA) Facility Investigation (RFI) at Solid Waste Management Unit (SWMU) 26 – Highway 58 Dump Site B at Naval Support Activity (NSA) Crane, located in Crane, Indiana under Contract Task Order (CTO) F27H, Contract N62470-08-D-1001, Comprehensive Long-term Environmental Action Navy (CLEAN).

SWMU 26 is located in a wooded area on the north side of Highway 58 in the central area of NSA Crane. SWMU 26 was a former dump site and approximately one-quarter acre in size. There are no structures at SWMU 26. An Initial Assessment Study (IAS) conducted in 1983 at NSA Crane, which included SWMU 26, reported the former dump site was located at an abandoned stone quarry and received burned garbage prior to 1942. Additional material disposed at the dump included paper, paints, paint thinners, oils, scrap metal, drums, and asbestos-containing transite building siding.

Previous environmental inspections and investigations conducted at SWMU 26 included the placement of nine groundwater monitoring wells in the vicinity of the former dump site in 1981. The nine groundwater monitoring wells were installed and screened in two water bearing zones. Three monitoring wells are screened in the upper water-bearing zone and six monitoring wells are screened in the lower water-bearing zone. A shale layer separates the upper and lower water-bearing zones. Groundwater flow direction at SWMU 26 in both the upper water-bearing zone and the lower-water bearing zone is estimated to flow southwest, south, and southeast from the site.

One of the three monitoring wells in the upper water-bearing zone is located upgradient of the former dump site and two are located downgradient and south and southwest of the site. There are no monitoring wells in the upper water-bearing zone downgradient and southeast of the site. One of the six monitoring wells in the lower water-bearing zone is located north and upgradient of the site and the other five monitoring wells are located downgradient and southwest, south, and southeast of the site. The 1983 IAS investigation reported groundwater samples from SWMU 26 were tested for pH, specific conductance, total organic carbon, and total organic halogens. The 1983 IAS report recommended further investigations at a number of Crane sites, although the former dump site (SWMU 26) was not identified as requiring further sampling.

All SWMU 26 debris was removed during Interim Measures (IM) work conducted in 1995 and 1996 (Morrison Knudsen, 1997). The initial IM activity included the removal of approximately 849 tons of non-friable asbestos debris and contaminated soil. Following debris removal, soil samples were collected and analyzed for volatile organic compounds (VOCs), semivolatile organic compounds (SVOCs), polychlorinated biphenyls (PCBs), pesticides, herbicides, and metals. The initial sample results showed

that cleanup criteria were met at some portions of the site, but two areas required further soil removal because of elevated soil concentrations of barium and lead.

One hundred twenty (120) tons of hazardous waste soil containing barium and lead was excavated and properly disposed. Forty-four (44) tons of special waste soil was excavated and disposed (Morrison Knudsen, 1997). In September 1996, confirmation soil samples were collected and analytical results were below the Interim Measures Cleanup Levels indentified for SWMU 26. As a result of the debris and soil removal activity, United States Environmental Protection Agency (USEPA) Region 5 approved a No Further Action (NFA) decision for soil only.

The sampling event proposed in this SAP is needed to determine if the upper water-bearing zone has been impacted by environmental contaminants at the site. The upper water-bearing zone is closer to the former dump site and is between the former dump site and lower water-bearing zone. A shale layer inhibits the flow of groundwater between the upper and lower water bearing zones. Therefore, the upper water-bearing zone will be the target of the investigation. The sampling event will include the installation of one additional groundwater monitoring well in the upper water-bearing zone southeast of the site because there are currently no monitoring wells downgradient and southeast of the site. Groundwater samples will be collected from three existing and one newly installed monitoring well in the upper water-bearing zone and analyzed for VOCs, SVOCs (including low level polycyclic aromatic hydrocarbon [PAHs]), and metals.

The SAP contained herein was generated for, and complies with, applicable Uniform Federal Policy for Quality Assurance Project Plans (UFP-QAPP), and USEPA Region 5 requirements, regulations, guidance, and technical standards, as appropriate.

This SAP outlines the organization, project management, objectives, planned activities, measurement, data acquisition, assessment, oversight, and data review procedures associated with the planned investigation at SWMU 26. Protocols for sample collection, handling and storage, chain-of-custody, laboratory and field analyses, data validation, and reporting are also addressed in this SAP. The investigation procedures utilized will comply with Tetra Tech Standard Operating Procedures (SOPs), which are included in Appendix A. The analytical procedures will follow the Laboratory SOPs which are included in Appendix B. The field work is scheduled to begin in April 2011. A complete schedule is presented in Worksheet No. 16.

Field activities conducted under this SAP will be in accordance with the requirements of a Site-Specific Health and Safety Plan that will be prepared by Tetra Tech for this investigation.

SAP Worksheets Page No.

SAP Worksheet No. 1 -- Title and Approval Page 1
SAP Worksheet No. 2 -- SAP Identifying Information 11
SAP Worksheet No. 3 -- Distribution List 12
SAP Worksheet No. 4 -- Project Personnel Sign-Off Sheet 14
SAP Worksheet No. 5 -- Project Organizational Chart 16
SAP Worksheet No. 6 -- Communication Pathways 17
SAP Worksheet No. 7 -- Personnel Responsibilities and Qualifications Table 19
SAP Worksheet No. 8 -- Special Personnel Training Requirements Table 21
SAP Worksheet No. 9 -- Project Scoping Session Participants Sheet 22
SAP Worksheet No. 10 – Conceptual Site Model 23
SAP Worksheet No. 11 -- Project Quality Objectives/Systematic Planning Process Statements 29
SAP Worksheet No. 12 -- Measurement Performance Criteria Table – Field Quality Control Samples 33
SAP Worksheet No. 13 -- Secondary Data Criteria and Limitations Table 34
SAP Worksheet No. 14 -- Summary of Project Tasks 35
SAP Worksheet No. 15 – Reference Limits and Evaluation Table 43
SAP Worksheet No. 16 -- Project Schedule / Timeline Table 52
SAP Worksheet No. 18 -- Sampling Locations and Methods/SOP Requirements Table 55
SAP Worksheet No. 19 -- Analytical SOP Requirements Table 56
SAP Worksheet No. 20 -- Field Quality Control Sample Summary Table 57
SAP Worksheet No. 21 -- Project Sampling SOP References Table 58
SAP Worksheet No. 22 -- Field Equipment Calibration, Maintenance, Testing, and Inspection Table 59
SAP Worksheet No. 23 – Analytical SOP References Table 60
SAP Worksheet No. 24 – Analytical Instrument Calibration Table 61
SAP Worksheet No. 25 – Analytical Instrument/Equipment Maintenance, Testing, and Inspection Table 65
SAP Worksheet No. 26 -- Sample Handling System 66
SAP Worksheet No. 27 – Sample Custody Requirements Table 67
SAP Worksheet No. 28 -- Laboratory QC Samples Table 68
SAP Worksheet No. 29 -- Project Documents and Records Table 74
SAP Worksheet No. 30 -- Analytical Services Table 75
SAP Worksheet No. 31 -- Planned Project Assessments Table 76
SAP Worksheet No. 32 -- Assessment Findings and Corrective Action Responses Table 77
SAP Worksheet No. 33 -- QA Management Reports Table 78
SAP Worksheet No. 34 -- Verification (Step I) Process Table 79
SAP Worksheet No. 35 -- Validation (Steps IIa and IIb) Process Table 81
SAP Worksheet No. 36 -- Analytical Data Validation (Steps IIa and IIb) Summary Table 83
SAP Worksheet No. 37 -- Usability Assessment 84
REFERENCES 86

List of Figures

10-1 Base and Site Location Map
10-2 Site Layout – 2005 Aerial Photograph
10-3 Monitoring Well Locations and Groundwater Flow Direction
10-4 Geologic Cross Section Location Map
10-5 Geologic Cross Section A-A'
10-6 Geologic Cross Section B-B'
10-7 Conceptual Site Model
10-8 Human Conceptual Exposure Model Diagram
17-1 Proposed Monitoring Well Location

Appendices

A - Tetra Tech Standard Operating Procedures and Field Forms
B - Laboratory Standard Operating Procedures
C - DQO Meeting Report
D- Background Documents
E - Project Screening Level Backup Documentation

ACRONYMS AND ABBREVIATIONS

AR	Administrative Record
BFB	Bromofluorobenzene
bgs	below ground surface
°C	degrees Celsius
CA	Corrective Action
CAS	Chemical Abstracts Service
CCB	Continuing Calibration Blank
CCC	Calibration Check Compound
CCV	Continuing Calibration Verification
CFR	Code of Federal Regulations
CLEAN	Comprehensive Long-term Environmental Action Navy
CLP	Contract Laboratory Program
CSM	Conceptual Site Model
CTO	Contract Task Order
CWAP	Comprehensive Work Approval Process
%D	percent difference or percent drift
DDT	dichlorodiphenyltrichloroethane
DFTPP	decafluorotriphenylphosphine
DO	dissolved oxygen
DL	Detection Limit
DoD	Department of Defense
DQI	Data Quality Indicator
DQO	Data Quality Objective
DVM	Data Validation Manager
EDD	Electronic Disk Deliverable
ELAP	Environmental Laboratory Accreditation Program
Empirical	Empirical Laboratories, LLC
ERSM	Environmental Restoration Site Manager
FD	Field Duplicate
FOL	Field Operations Leader
FTMR	Field Task Modification Request
GC/MS	Gas Chromatograph/Mass Spectrometer
G-DCL	Default Closure Level, Groundwater
GPS	global positioning system
HASP	Health and Safety Plan
Heritage	Heritage Environmental Services, Inc.
HCl	hydrochloric acid

HSM	Health and Safety Manager
IAS	Initial Assessment Study
IM	Interim Measures
ICAL	Initial Calibration
ICB	Initial Calibration Blank
ICP	Inductively Coupled Plasma
ICP-AES	Inductively Coupled Plasma-Atomic Emission Spectroscopy
ICS	Interference Check Standard
ICV	Initial Calibration Verification
IDEM	Indiana Department of Environmental Management
IDW	investigation-derived waste
IS	Internal Standard
IUPPS	Indiana Underground Plant Protection Services
Kearney	A. T. Kearney, Inc.
L	liter
LCS	Laboratory Control Sample
LCSD	Laboratory Control Sample Duplicate
LOD	Limit of Detection
LOQ	Limit of Quantitation
LUC	land use control
MCL	Maximum Contaminant Level
mL	milliliter
MPC	Measurement Performance Criterion
msl	mean sea level
MS	Matrix Spike
MSD	Matrix Spike Duplicate
NA	Not Applicable
NAVFAC	Naval Facilities Engineering Command
NEESA	Navy Energy and Environmental Support Activity
NC	no criteria
ND	non detect
NFA	No Further Action
NIRIS	Naval Installation Restoration Information Solution
NSA	Naval Support Activity
NTU	Nephelometric Turbidity Unit
ORP	Oxidation-Reduction Potential
OSHA	Occupational Safety and Health Administration
PAH	polycyclic aromatic hydrocarbon
PCB	polychlorinated biphenyl
PDF	Portable Document Format

PID	Photoionization Detector
PM	Project Manager
POC	Point of Contact
ppb	parts per billion
PPE	personal protective equipment
ppm	parts per million
PQLG	Project Quantitation Limit Goal
PQO	project quality objective
PR/VSI	Preliminary Review/Visual Site Inspection
PSL	Project Screening Level
PWD	Public Works Department
QA	quality assurance
QAM	Quality Assurance Manager
QAO	Quality Assurance Officer
QC	quality control
QSM	Quality Systems Manual
%R	percent recovery
r	Linear Regression Correlation Coefficient
r^2	Coefficient of Determination
RCRA	Resource Conservation and Recovery Act
RF	Response Factor
RFI	Resource Conservation and Recovery Act Facility Investigation
RISC	Risk Integrated System of Closure
RPD	Relative Percent Difference
RPM	Remedial Project Manager
% RSD	Relative Standard Deviation
RRT	Relative Retention Time
RT	Retention Time
SAP	Sampling and Analysis Plan
SDG	sample delivery group
SOP	Standard Operating Procedure
SPCC	System Performance Check Compound
SQL	Structured Query Language
SSO	Site Safety Officer
SVOC	semivolatile organic compound
SWMU	Solid Waste Management Unit
TBD	To Be Determined
T-RSL	Tapwater Regional Screening Level
Tetra Tech	Tetra Tech NUS, Inc.
UFP-QAPP	Uniform Federal Policy for Quality Assurance Project Plan

µg/L	microgram per liter
USACE	United States Army Corps of Engineers
USEPA	United States Environmental Protection Agency
VOC	volatile organic compound
WES	Waterways Experiment Station

SAP Worksheet No. 2 -- SAP Identifying Information

(UFP-QAPP Manual Section 2.2.4)

Site Name/Number:	Naval Support Activity (NSA) Crane, Solid Waste Management Unit (SWMU) 26 – Highway 58 Dump Site B
Operable Units:	Not Applicable (NA)
Contractor Name:	Tetra Tech NUS, Inc. (Tetra Tech)
Contract Number:	N62470-08-D-1001
Contract Title:	Comprehensive Long-term Environmental Action Navy (CLEAN)
Work Assignment Number:	Contract Task Order (CTO) F27H

1. This Sampling and Analysis Plan (SAP) was prepared in accordance with the requirements of the United States Environmental Protection Agency (USEPA) *Uniform Federal Policy for Quality Assurance Project Plans (UFP-QAPP)* (USEPA, 2005) and *EPA Guidance for Quality Assurance Project Plans*, EPA QA/G-5, QAMS (USEPA, 2002).

2. Identify regulatory program: The Indiana Department of Environmental Management (IDEM) Hazardous Waste Closure and Corrective Action Programs, which implement and enforce the Resource Conservation and Recovery Act (RCRA), and related state laws and rules.

3. This SAP is a project-specific SAP.

4. List dates of scoping sessions that were held:

Scoping Session	Date
Data Quality Objective (DQO) Meeting	December 16, 2010

5. List dates and titles of any SAP documents written for previous site work that are relevant to the current investigation.

Title	Date
Hydrogeologic Investigation of Waste Disposal Sites (United States Army Corps of Engineers [USACE] Waterways Experiment Station [WES], April 1982)	April 1982
Interim Measures Report (Naval Facilities Engineering Command [NAVFAC], October 1997)	October 1997

6. List organizational partners (stakeholders) and connection with lead organization:

IDEM (lead regulatory agency), USEPA Region 5 (regulatory oversight), NAVFAC Midwest, NSA Crane, (property owner), Tetra Tech (Navy contractor)

7. Lead organization: NAVFAC Midwest

8. If any required SAP elements or required information are not applicable to the project or are provided elsewhere, then note the omitted SAP elements and provide an explanation for their exclusion below:

NA, as there are no exclusions.

SAP Worksheet No. 3 -- Distribution List

(UFP-QAPP Manual Section 2.3.1)

Name of SAP Recipients	Title/Role	Organization	Telephone Number	E-mail Address or Mailing Address
Howard Hickey	NAVFAC Remedial Project Manager (RPM)/ Manages Project Activities for the Navy	NAVFAC Midwest	847-688-2600 X243	howard.hickey@navy.mil
Tom Brent	Environmental Restoration Site Manager (ERSM)/ Crane Point of Contact (POC)	NAVFAC Midwest Public Works Department (PWD) Crane	812-854-6160	thomas.brent@navy.mil
To Be Determined (TBD) (electronic upload)	NAVFAC Quality Assurance Officer (QAO)/ Navy Chemist	NAVFAC Atlantic	TBD	TBD
Bonnie Capito (final cover letter only)	Librarian and Records Manager/ Navy Administrative Record (AR)	NAVFAC Atlantic	757-322-4785	bonnie.capito@navy.mil
Peter Ramanauskas	USEPA RPM/ Regulator Input	USEPA Region 5	312-866-7890	ramanauskas.peter@epamail.epa.gov
Doug Griffin	IDEM RPM/ Regulator Input	IDEM	317-233-2710	dgriffin@idem.in.gov
Anthony P. Klimek, P.E.	Project Manager (PM)/ Manages Project Activities	Tetra Tech	513-557-5057	tony.klimek@tetratech.com
Ralph Basinski	Crane Activity Coordinator/ Coordinates Tetra Tech Activities at NSA Crane	Tetra Tech	412-921-8308	ralph.basinski@tetratech.com
Tom Johnston, PhD (electronic copy only)	Quality Assurance Manager (QAM)/ Manages Corporate Quality Assurance (QA) Program and Implementation	Tetra Tech	412-921-8615	tom.johnston@tetratech.com
Matt Soltis [Health and Safety Plan (HASP) only]	Health and Safety Manager (HSM)/ Manages Corporate Health and Safety Program	Tetra Tech	412-921-8912	matt.soltis@tetratech.com

Name of SAP Recipients	Title/Role	Organization	Telephone Number	E-mail Address or Mailing Address
Joe Samchuck (electronic copy only)	Data Validation Manager (DVM)/ Manages Data Validation	Tetra Tech	412-921-8510	joseph.samchuck@tetratech.com
George Ten Eyck	Field Operations Leader (FOL) and Site Safety Officer (SSO)/ Manages Field Operation and Site Safety Issues	Tetra Tech	513-557-5043	george.teneyck@tetratech.com
Mark Traxler (electronic copy only)	Project Chemist/ Provides Coordination with Laboratory	Tetra Tech	610-382-1171	mark.traxler@tetratech.com
Driller (TBD) (electronic copy only)	Drilling Subcontractor PM/ Provides Drilling Services	TBD	TBD	TBD
Kim Kostzer (electronic copy only)	Laboratory PM - Representative for Laboratory and Analytical Issues	Empirical Laboratories, LLC (Empirical)	615-345-1115	kkostzer@empirlabs.com
Surveyor (TBD) (electronic copy only)	Surveyor/ Provides Surveying Services	TBD	TBD	TBD

SAP Worksheet No. 4 -- Project Personnel Sign-Off Sheet

(UFP-QAPP Manual Section 2.3.2)

Certification that project personnel have read the text will be obtained by one of the following methods as applicable:

1. In the case of regulatory agency personnel with oversight authority, approval letters or e-mails will constitute verification that applicable sections of the SAP have been reviewed. Copies of regulatory agency approval letters / e-mails will be retained in the project files and are listed in Worksheet No. 29 as project records.

2. E-mails will be sent to the Navy, Tetra Tech, and subcontractor project personnel who will be requested to verify by e-mail that they have read the applicable SAP / sections and the date on which they were reviewed. Copies of the verification e-mail will be included in the project files and is identified in Worksheet No. 29.

   A copy of the signed Worksheet No. 4 will be retained in the project files and is identified as a project document in Worksheet No. 29.

Name [1]	Organization/Title/Role	Telephone Number	Signature/E-Mail Receipt	SAP Section Reviewed	Date SAP Read
Navy and Regulator Project Team Personnel					
Howard Hickey	NAVFAC/ Navy RPM/ Manages Project Activities for the Navy	847-688-2600 X243		All	
Tom Brent	NAVFAC/ ERSM/ Site POC	812-854-6160	See Worksheet No.1 for signature	All	
Doug Griffin	IDEM/ RPM/ Provides Regulator Input	317-233-2710	See Worksheet No.1 for signature	All	
Tetra Tech Project Team Personnel					
Tony Klimek, P.E.	Tetra Tech/ PM/ Manages Project Activities	513-557-5057	See Worksheet No.1 for signature	All	
Tom Johnston	Tetra Tech/ QAM/ Manages NAVFAC Contract QA Program and Implementation	412-921-8615	See Worksheet No.1 for signature	All	
George Ten Eyck	Tetra Tech/ FOL/SSO/ Manages Field Operation and Site Safety Issues	513-557-5043		All	

Name [1]	Organization/Title/Role	Telephone Number	Signature/E-Mail Receipt	SAP Section Reviewed	Date SAP Read
Matt Soltis	Tetra Tech/ HSM/ Manages Corporate Health and Safety Program	412-921-8912		HASP only	
Joe Samchuck	Tetra Tech/ DVM/ Manages Data Validation	412-921-8510		Worksheet Nos. 12, 14, 15, 19, 20, 23-28, 30, and 34-37	
Mark Traxler	Tetra Tech/ Project Chemist/ Provides Coordination with Laboratory	610-382-1171		All	
Subcontractor Personnel					
Kim Kostzer	Empirical/ Laboratory PM/ Representative for Laboratory and Analytical Issues	615-345-1115		Worksheet Nos. 6, 12, 14, 15, 19, 20, 23-28, 30, and 34-36	
TBD	TBD/ Subcontractor PM/ Provides Drilling Services	TBD		Worksheet Nos. 6, 14, 17, and Figures	
Surveyor	Surveyor/ Provides Surveying Services	TBD		Worksheet No. 14 and Figures	

1 Persons listed on this worksheet will be responsible for distributing the SAP to the appropriate people within their organization.

SAP Worksheet No. 5 -- Project Organizational Chart

(UFP-QAPP Manual Section 2.4.1)

Lines of Authority ——— Lines of Communication

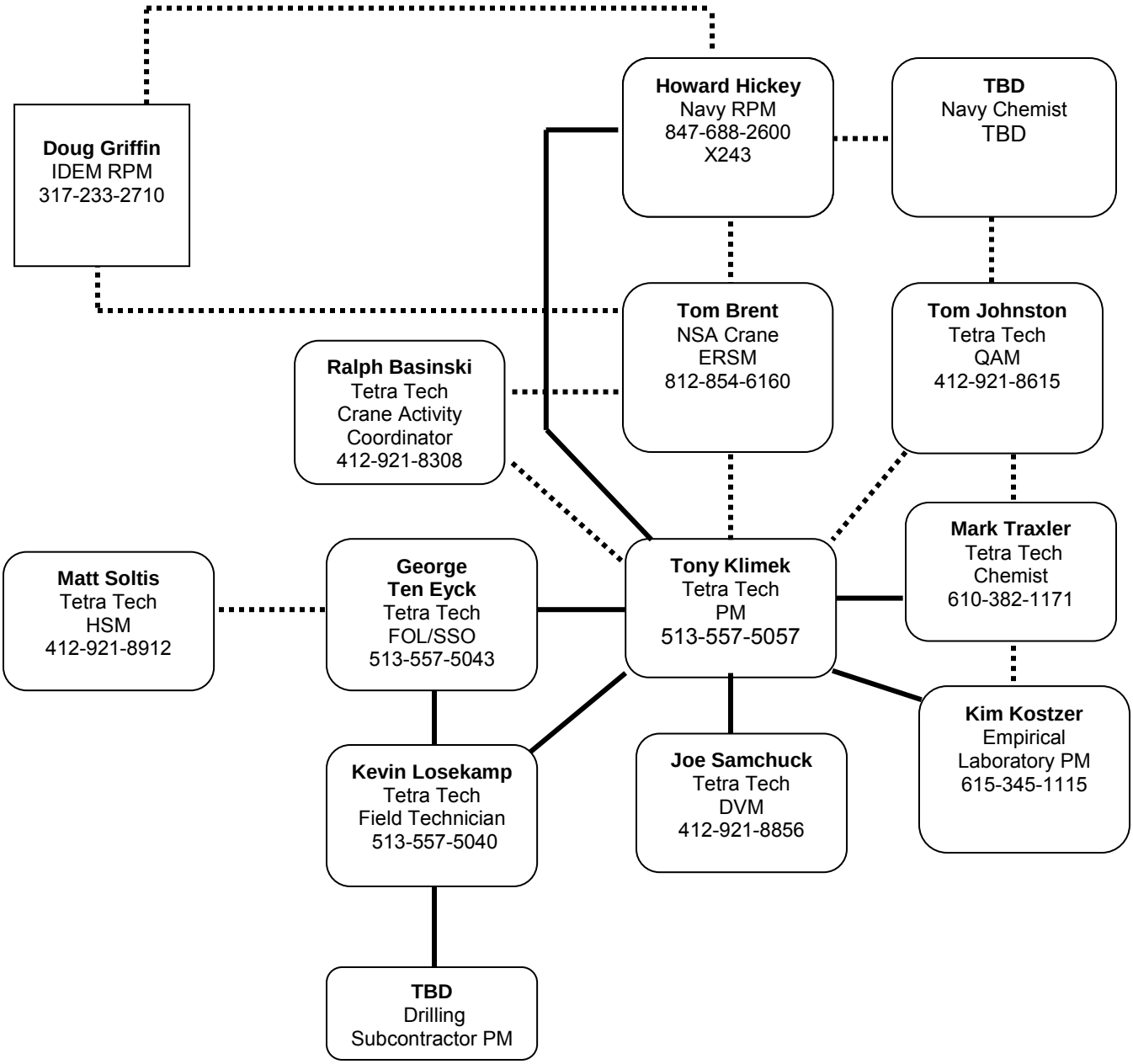

SAP Worksheet No. 6 -- Communication Pathways

(UFP-QAPP Manual Section 2.4.2)

Communication Driver	Responsible Affiliation	Name	Phone Number and/or E-Mail	Procedure
SAP Amendments	Tetra Tech FOL/SSO Tetra Tech PM Navy RPM	George Ten Eyck Tony Klimek Howard Hickey	513-557-5043 513-557-5057 847-688-2600 x243	Tetra Tech FOL will verbally inform Tetra Tech PM within 24 hours of realizing a need for an amendment. Tetra Tech PM will document the proposed changes via a Field Task Modification Request (FTMR) form within five days and send the Navy RPM a concurrence letter within seven days of identifying the need for change. SAP amendments will be submitted by Tetra Tech PM to NAVFAC Midwest Program Management Office for review and approval. Tetra Tech PM will send scope changes to Project Team via e-mail within one business day.
Changes in field work schedule	Tetra Tech PM NSA Crane ERSM	Tony Klimek Tom Brent	513-557-5057 812-854-6160	Tetra Tech PM will verbally inform the NSA Crane ERSM on the day that a schedule change is known and will document via schedule impact letter within one business day of when the impact is realized.
Issues in the field that result in changes in scope of field work	Tetra Tech FOL/SSO Tetra Tech PM NSA Crane ERSM	George Ten Eyck Tony Klimek Tom Brent	513-557-5043 513-557-5057 812-854-6160	Tetra Tech FOL will inform Tetra Tech PM within 1 business day of when an issue is discovered; Tetra Tech PM will inform NSA Crane ERSM by close of the next working day; NSA Crane ERSM will issue scope change if warranted. The scope change is to be implemented before further work is executed. Tetra Tech PM will document the changes within two days of identifying the need for change on a FTMR form and obtain required approvals within five days of initiating the form.
Recommendations to stop work and initiate work upon corrective action	Tetra Tech FOL/SSO Tetra Tech PM Tetra Tech QAM Tetra Tech Project Chemist Tetra Tech HSM NSA Crane ERSM	George Ten Eyck Tony Klimek Tom Johnston Mark Traxler Matt Soltis Tom Brent	513-557-5043 513-557-5057 412-921-8615 610-382-1171 412-921-8912 812-854-6160	If Tetra Tech is the responsible party for a stop work command, the Tetra Tech FOL will inform onsite personnel, subcontractor(s), NSA Crane ERSM, and the identified Project Team members within one hour (verbally or by e-mail). If a subcontractor is the responsible party, the subcontractor PM must inform the Tetra Tech FOL within 15 minutes, and the Tetra Tech FOL will then follow the procedure listed above.

Communication Driver	Responsible Affiliation	Name	Phone Number and/or E-Mail	Procedure
Field data quality issues	Tetra Tech FOL/SSO Tetra Tech PM	George Ten Eyck Tony Klimek	513-557-5043 513-557-5057	Tetra Tech FOL will inform Tetra Tech PM verbally or by e-mail on the same day that a field data quality issue is discovered.
Analytical data quality issues	Empirical Laboratory PM Tetra Tech Project Chemist Tetra Tech DVM Tetra Tech PM NSA Crane ERSM Navy RPM	Kim Kostzer Mark Traxler Joe Samchuck Tony Klimek Tom Brent Howard Hickey	615-345-1115 610-382-1171 412-921-8510 513-557-5057 812-854-6160 847-688-2600 x243	The Laboratory PM will notify (verbally or via e-mail) the Tetra Tech Project Chemist within one business day of when an issue related to laboratory data is discovered. The Tetra Tech Project Chemist will notify (verbally or via e-mail) the Tetra Tech DVM/data validation staff and the Tetra Tech PM within one business day. The Tetra Tech DVM or Project Chemist notifies the Tetra Tech PM verbally or via e-mail within 48 hrs of validation completion that a non-routine and significant laboratory quality deficiency has been detected that could affect this project and/or other projects. The Tetra Tech PM verbally advises the NSA Crane ERSM and Navy RPM within 24 hours of notification from the Tetra Tech Project Chemist or DVM. The NSA Crane ERSM takes corrective action that is appropriate for the identified deficiency. Examples of significant laboratory deficiencies include data reported that has a corresponding failed tune or initial calibration verification. Corrective actions may include a consult with the Navy Chemist.

SAP Worksheet No. 7 -- Personnel Responsibilities and Qualifications Table

(UFP-QAPP Manual Section 2.4.3)

Name	Title/Role[1]	Organizational Affiliation	Responsibilities
Doug Griffin	RPM/ Provides regulator Input	IDEM	Participates in scoping, conducts data review and evaluation, and approves the SAP.
Tom Brent	ERSM/ Manages daily site activities related to this project	NSA Crane	Oversees site activities, participates in scoping, conducts data review and evaluation, and approves the SAP.
Howard Hickey	RPM/ Manages project	NAVFAC Midwest	Oversees project implementation including scoping and data review and evaluation.
Ralph Basinski	Crane Activity Coordinator/ Coordinates Tetra Tech activities at NSA Crane	Tetra Tech	Oversees project implementation including scoping and data review and evaluation.
Tony Klimek	PM/ Manages project on a daily basis	Tetra Tech	Oversees project, including financial, schedule, and technical day-to-day management of the project.
George Ten Eyck	FOL/SSO/ Manages field operations and oversees site activities to ensure safety requirements are met	Tetra Tech	As FOL, supervises, coordinates, and performs field sampling activities. As SSO, responsible for on-site project specific health and safety training and monitoring site conditions. Details of these responsibilities are presented in the HASP.
Tom Johnston	QAM/ Oversees program and project QA activities	Tetra Tech	Ensures quality aspects of the CLEAN program are implemented, documented, and maintained.
Mark Traxler	Project Chemist/ Provides coordination with laboratory	Tetra Tech	Participates in project scoping, prepares laboratory scopes of work, and coordinates laboratory-related functions with laboratory. Oversees data quality reviews and QA of data validation deliverables.

Name	Title/Role[1]	Organizational Affiliation	Responsibilities
Joseph Samchuck	DVM/ Oversees data validation activities	Tetra Tech	Manages data validation activities within Tetra Tech, including ensuring QA of data validation deliverables, providing technical advice on data usability, and coordinating and maintaining the data validation review schedule.
Matt Soltis	HSM/ Oversees health and safety activities	Tetra Tech	Oversees the CLEAN Program Health and Safety Program.
TBD	Subcontractor PM/ Drilling Services	TBD	Performs drilling according to scope of work. Provide equipment to drill and install monitoring wells.
Kim Kostzer	Laboratory PM/ Representative for Laboratory and Analytical Issues	Empirical	Coordinates analyses with lab chemists, ensures that scope of work is followed, provides QA of data packages, and communicates with Tetra Tech staff.
TBD	Surveyor/ Provides Surveying Services	TBD	Determines survey data for monitoring wells according to scope of work.

1 In some cases, one person may be designated responsibilities for more than one position. For example, the FOL may also be responsible for SSO duties. This action will be performed only as credentials, experience, and availability permits.

SAP Worksheet No. 8 -- Special Personnel Training Requirements Table

(UFP-QAPP Manual Section 2.4.4)

Each site worker will be required to have completed a 40-hour course (and 8-hour refresher, if applicable) in Health and Safety Training as described under Occupational Safety and Health Administration (OSHA) 29 Code of Federal Regulations (CFR) 1910.120(e). Safety requirements are addressed in greater detail in the site-specific HASP.

SAP Worksheet No. 9 -- Project Scoping Session Participants Sheet

(UFP-QAPP Manual Section 2.5.1)

Project Name: NSA Crane SWMU 26 RCRA Facility Investigation (RFI) Projected Date(s) of Sampling: April 2011 Project Manager: Tony Klimek	Site Name: SWMU 26 – Highway 58 Dump Site Site Location: Crane, Indiana

Date of Session: December 16, 2010
Scoping Session Purpose: Develop project quality objectives (PQOs) for RFI activities

Name	Title	Affiliation	Phone #	E-mail Address	Project Role
Tony Klimek	PM	Tetra Tech	513-557-5057	tony.klimek@tetratech.com	Management
Tom Brent	ERSM	NSA Crane	812-854-6160	thomas.brent@navy.mil	Management
Doug Griffin	RPM	IDEM	317-233-2710	dgriffin@idem.in.gov	State RPM
Ralph Basinski	Crane Activity Coordinator	Tetra Tech	412-921-8308	ralph.basinski@tetratech.com	Management/ Oversight

A copy of the DQO Meeting Report is provided in Appendix C. Specific issues discussed at the meeting included:

1. Tetra Tech presented background information about SWMU 26. All debris from the dump site has been removed. The USEPA has approved No Further Action (NFA) for the soil at the site.

2. There are nine existing groundwater monitoring wells at the site; three in the upper water-bearing zone and six in the lower water-bearing zone. There is a shale layer between the upper and lower water-bearing zones. This shale layer is a barrier that could prevent contamination (if present) in the upper water-bearing zone from entering the lower water-bearing zone. There are no existing monitoring wells in the upper water-bearing zone southeast of the former dump site. There are no sampling and analysis data from the existing wells.

3. The initial RFI sampling will include installation of one additional groundwater monitoring well in the upper water-bearing zone southeast of the site; and one round of sampling in the four wells (three existing and one new) in the upper water-bearing zone.

4. Existing wells in the upper water-bearing zone will be repaired as necessary. Based on initial results, additional sampling and analysis may be performed, or the site may proceed to NFA for groundwater.

5. There are no historical groundwater data from the groundwater monitoring wells at the site. Based on limited historical soil data and information about the site, initial groundwater samples will be analyzed for volatile organic compounds (VOCs), semivolatile organic compounds (SVOCs), and metals.

SAP Worksheet No. 10 – Conceptual Site Model

(UFP-QAPP Manual Section 2.5.2)

This worksheet presents general background information about SWMU 26 – Highway 58 Dump Site B and a conceptual site model (CSM) that describes potential contamination routes and possible exposure pathways and receptors. The CSM served as the basis for developing the sampling and analysis program.

10.1 PHYSICAL SITE DESCRIPTION

SWMU 26 – Highway 58 Dump Site B (SWMU 26 or site) is located in the central area of NSA Crane (see Figure 10-1). As shown on Figure 10-2, SWMU 26 is on the north side of Highway 58 just west of Turkey Creek. It is located approximately one half-mile west of the intersection of Highway 58 and Highway 99. SWMU 26 is an irregular shaped area; there are no buildings or structures located on SWMU 26. The former dump site is approximately 160-feet long (east-west) and approximately 100-feet wide (north-south) and covers approximately one-quarter acre.

As shown on Figure 10-3, the former dump site is located on the south end of a ridge that trends north-south. The general topography of SWMU 26 slopes south from the ridge toward Highway 58. The ridge north of the former dump site is at elevation 650 feet above mean sea level (msl) and Highway 58 south of the former dump site is at an elevation of 530 feet above msl.

The former dump site is located on a bench at the base of a south facing rock cliff on the south end of the ridge. The bench is exposed bedrock at approximately 580 feet above msl. Vehicle access to the former dump site is by a 750-foot long unmarked gravel road from Highway 58. Immediately north of the former dump site is a near vertical massive sandstone outcrop, which has been quarried in the past. Further north of the sandstone outcrop and uphill is undeveloped woodland. Approximately 500 feet southeast of the former dump site is Turkey Creek at an elevation of approximately 520 feet msl.

Surface runoff from SWMU 26 is to the west, south, and east; this runoff flows indirectly (via intermittent tributary to the west) or directly into Turkey Creek. Turkey Creek flows southwest for approximately 2.5 miles until discharging to Boggs Creek. Boggs Creek flows south and off the NSA Crane facility approximately 8 miles south of SWMU 26. There are no streams or drainage ways within the boundaries of SWMU 26.

NSA Crane is in the unglaciated Crawford upland physiographic province of southern Indiana, which is a rugged dissected plateau bordered on the west by the Wabash lowland and on the east by the Mitchell plain. Bedrock geology is mapped as Pennsylvanian and Mississippian sandstones, limestones, and shales overlain by Quaternary-age deposits. Groundwater flow in the area generally mimics topography and is assumed to flow south to Turkey Creek.

The NSA Crane facility was a rural, forested, and farmed area when it was commissioned as a Navy facility in 1941. Most of NSA Crane is forested, including the area to the south, west, and east of the site. There are no known historical or cultural concerns, such as Native American burial grounds or historic landmarks on or in the vicinity of the site. There are no land use controls (LUCs) associated with the site. The nearest residence is located more than four miles to the west of the site, beyond the western boundary of the facility.

10.2 SMWU 26 HISTORY

An Initial Assessment Study (IAS) conducted in 1983 at NSA Crane by the Naval Energy and Environmental Support Activity (NEESA), which included SWMU 26, reported that prior to 1942, the benched area in the central part of SWMU 26 was an abandoned stone quarry and "garbage" was disposed at the former quarry (NEESA, 1983). In March 1987, A.T. Kearney, Inc. (Kearney) issued a Preliminary Review/Visual Site Inspection Report (PR/VSI) that reported materials disposed at the site consisted of paper, paints, paint thinners, oils, scrap metal, drums, and asbestos-containing transite building siding (Kearney, 1987). The date when the dump site stopped receiving waste was not reported. All SWMU 26 dump site debris was removed during Interim Measures (IM) conducted in 1995 and 1996 (Morrison Knudsen, 1997).

10.3 PREVIOUS ENVIRONMENTAL INVESTIGATIONS AND ACTIONS

Previous environmental inspections and investigations conducted at SWMU 26 include an investigation reported in the Geotechnical Laboratory, USACE Hydrogeologic Investigation of Waste Disposal Sites at the Naval Weapons Support Center, Crane, Indiana (USACE, 1982), the IAS in 1983, the PR/VSI in 1987, and the IMs in 1995 and 1996.

In 1981, nine groundwater monitoring wells were installed in the vicinity of the former dump site as part of the USACE investigation of the Crane facility (USACE, 1982). The locations of these wells are shown on Figure 10-3. When the nine existing wells at SWMU 26 were installed in 1981, the site was designated Site 8 and the wells were identified as "WES-8-1-81" to "WES-8-9-81". The monitoring wells have been renamed to conform to current NSA Crane standards and have been renumbered 26MW01 to 26MW09. The actual well number (1 to 9) remains the same for each well: WES-8-1-81 is 26MW01; WES-8-2-81 is 26MW02; and so on. The wells shown on the figures, and referenced in this report, are identified as wells 26MW01 to 26MW09. The USACE report contained well logs, hydrogeologic, and geologic information. However, no groundwater chemical analysis was conducted during this investigation or was found during review.

The nine groundwater monitoring wells were installed and screened to monitor two water-bearing zones at the site. Copies of the boring logs and well construction diagrams are provided in Appendix D. The locations of these two zones are shown on the two geologic cross sections. Figure 10-4 shows the

locations of the cross sections, Figure 10-5 shows the north-south Cross Section A-A', and Figure 10-6 shows the west-east Cross Section B-B'. The two water bearing zones are identified on the cross sections as: 1) the upper water-bearing zone, with a water surface elevation of approximately 575 feet above msl, and 2) the lower water-bearing zone with a water surface elevation of approximately 520 feet above msl. The water-bearing zone designations in this SAP are intended for this site only and may not be the same as water-bearing zones at other sites at NSA Crane.

The wells were constructed with 10-foot screen intervals that ranged in depth from 26 feet below ground surface (bgs) (26MW02) to 131 feet bgs (26MW07). Three monitoring wells (26MW01, 26MW02, and 26MW06) are screened in the upper water-bearing zone and had groundwater surface elevations ranging from approximately 570 feet above msl to 577 feet above msl. Six monitoring wells (26MW03, 26MW04, 26MW05, 26MW07, 26MW08, and 26MW09) are screened in the lower water-bearing zone and had groundwater surface elevations ranging from approximately 517 feet above msl to 530 feet above msl. As shown on Figures 10-5 and 10-6, the upper and lower water-bearing zones are separated by a shale layer.

Approximate groundwater flow direction at SWMU 26 is shown on Figure 10-3 and generally appears to mimic topography. Groundwater in both the upper water-bearing zone and the lower-water bearing zone is estimated to flow southwest, south, and southeast from the site. This flow direction is based on groundwater depths reported in the 1982 USACE report, groundwater elevations collected by Tetra Tech during the 2005 Well Inspection and Maintenance Program, and data from other sites at NSA Crane.

As shown on Figure 10-3, there are three monitoring wells in the upper water-bearing zone – 26MW01, 26MW02, and 26MW06. Monitoring well 26MW01 is located north and upgradient of the site. Monitoring wells 26MW02 and 26MW06 are located downgradient and south and southwest of the site, respectively. There are no monitoring wells in the upper water-bearing zone downgradient and southeast of the site.

As shown on Figure 10-3, there are six monitoring wells in the lower water-bearing zone – 26MW03, 26MW04, 26MW05, 26MW07, 26MW08, and 26MW09. Monitoring well 26MW07 is located north and upgradient of the site. The other five monitoring wells are located downgradient across the areas southwest, south, and southeast of the site.

The 1983 IAS investigation reported groundwater samples from SWMU 26 were tested for pH, specific conductance, total organic carbon, and total organic halogens. The 1983 IAS report recommended further investigations at a number of Crane sites, although the former dump site (SWMU 26) was not identified as requiring further sampling.

The PR/VSI identified active "SWMUs and other areas of concern" at the Crane facility (Kearney, 1987). SWMU 26 was identified in the PR/VSI as Unit 78: Highway 58 Dump Site B and an area between Highway 45 and Highway 58 where disposal was apparent "at the base of a massive sandstone outcrop".

The report identified seven monitoring wells in place at this unit. The PR/VSI reported that seven monitoring wells had been installed at the site and that "insufficient information was available to develop conclusion regarding release potential to the various pathways". The report suggested "continued assessment of groundwater quality should be performed to determine the extent of contamination (if any)".

All SWMU 26 debris was removed during IM work conducted in 1995 and 1996 (Morrison Knudsen, 1997). The initial IM activity included the removal of approximately 849 tons of non-friable asbestos debris and contaminated soil. This material was disposed as special waste in March 1996 at the Southside Landfill in Indianapolis, Indiana. Following debris removal, 14 soil samples were collected on March 12, 1996 and analyzed by CompuChem Environmental Corporation located in Cary, North Carolina for VOCs, SVOCs, polychlorinated biphenyls (PCBs), pesticides, herbicides, and metals. Of the detectable concentrations of VOCs, SVOCs, PCBs, pesticides, and herbicides, only one herbicide, methyl parathion, was detected at a concentration greater than an Interim Measures Cleanup Level (26 parts per billion [ppb], which was slightly greater than the Interim Measures Cleanup Level of 20 ppb). If methyl parathion were added to the target analyte list for this RFI, the current soil Project Screening Level (PSL) would be at 300 ppb, significantly higher than the reported level of 26 ppb. The initial sample results showed that cleanup criteria were met at some portions of the site, but two areas required further soil removal because of elevated soil concentrations of barium and lead.

One of the two areas included a 3,635 square foot area with barium and lead concentrations that classified the soil as a hazardous waste. The second area was a 1,847 square foot area with the soil to be excavated classified as a special waste due to asbestos-containing material. One hundred twenty (120) tons of hazardous waste soil containing barium and lead was excavated and transported to Heritage Environmental Services, Inc. (Heritage) located in Indianapolis, Indiana for treatment and disposal. Forty-four (44) tons of special non-hazardous waste soil was excavated and disposed at Heritage (Morrison Knudsen, 1997). Soil samples were collected during excavation to determine areas requiring additional excavation. In these two areas, all overburden soil was excavated to the sandstone bedrock, which is currently exposed at SWMU 26. In September 1996, confirmation samples were collected and analytical results from American Environmental Network, Inc. located in Columbia, Maryland were below the Interim Measures Cleanup Levels indentified for SWMU 26. As a result of the debris and soil removal activity, USEPA approved an NFA decision for soil only.

10.4 CONCEPTUAL SITE MODEL

SWMU 26 was a former waste dump. Materials disposed at the former dump site consisted of paper, paints, paint thinners, oils, scrap metal, drums, and asbestos-containing transite building siding. Concentrations of VOCs, SVOCs, PCBs, pesticides, herbicides, and metals have been detected in soil; however, confirmation IM sampling results indicate that no soil contamination remains at SWMU 26. It is possible that VOCs, SVOCs, and metals may have migrated to the groundwater at SWMU 26 prior to

removal of the source material and contaminated soil. There were no reports of pesticides or herbicides being stored, used, or dumped at the former dump site. However, the herbicide methyl parathion was detected in one sample at 26 ppb, slightly above the then-current IMCL of 20 ppb. No analytical data currently exists for groundwater at SWMU 26.

A CSM Cross-Section Schematic for SWMU 26 is presented on Figure 10-7. As shown on that figure, the former dump site is located within 20 feet of the upper water-bearing zone. A shale layer separates the upper water-bearing zone from the lower water-bearing zone; this shale layer could impede flow from the upper water-bearing zone to the lower water-bearing zone. Also, as previously described, there currently are no monitoring wells in the upper water-bearing zone downgradient and southeast of the site.

10.4.1 Potential Sources and Contaminants of Concern

Based on historical information, releases from the historical debris and waste in the former dump site are potential sources of groundwater contamination at SWMU 26. Potential contaminants at SWMU 26 include VOCs, SVOCs (including low level polycyclic aromatic hydrocarbons [PAHs]), and metals. Soil samples collected during the IM activities showed no detectable concentration of PCBs. Only one sample exhibited one herbicide, methyl parathion, slightly above the then current IMCL, Therefore, PCBs and herbicides are not considered to be present at potentially unacceptable levels in the groundwater. The potentially impacted environmental media is groundwater.

10.4.2 Potential Migration and Exposure Pathways

The former soil contamination at SWMU 26 that has been removed may have been a source of contamination to the upper water-bearing zone of groundwater. The shale layer may be a barrier to prevent contamination in the upper water-bearing zone from entering the lower water-bearing zone. Potential exposure pathways are illustrated on Figure 10-8.

10.4.3 Potential Receptors

Human receptors at SWMU 26 include people who currently, or could in the future, interact with contaminated groundwater. The area is rural, and the nearest residence is located more than four miles west of the site. There are no known potable groundwater wells in the four mile radius from SWMU 26 within the Crane facility. However, because future land use is unknown, it is common practice to evaluate the future use of a property at NSA Crane as residential. Therefore, potential future receptors include residents and persons using groundwater in the area of the site. Human receptors may be exposed to groundwater through the deliberate act of withdrawing groundwater for potable use.

As previously described, surface debris and visible contamination were previously removed from the site, and the USEPA approved an NFA decision for soil at the site. Also, no surface water or drainage ways

exist at the site. Therefore, surface water and sediment are not included as potential exposure pathways for SWMU 26.

SAP Worksheet No. 11 -- Project Quality Objectives/Systematic Planning Process Statements

(UFP-QAPP Manual Section 2.6.1)

This section describes the development of PQOs using USEPA's seven-step DQO/Systematic Planning Process.

11.1 PROBLEM STATEMENT

All surface debris in the dump site and associated contaminated soil has been removed from the site and regulators have approved an NFA for the soil; however, no regulatory decisions have been made regarding groundwater at SWMU 26. There is a groundwater well network at the site, but there are no shallow wells in the southeast area of the site. Groundwater will be investigated to determine whether site-related chemicals have migrated into the upper water bearing zone at concentrations that exceed regulatory criteria, to determine if corrective action or additional investigation is necessary.

11. 2 INFORMATION INPUTS

The following chemical and physical data are needed to attain project objectives:

1. Chemical data: Chemical groundwater data must be collected to determine if target analytes are present in site groundwater. The list of target analytes and associated PSLs for groundwater are presented in Worksheet No. 15. The sampling methods are presented in Worksheet No. 18, and the analytical methods are presented in Worksheet No. 19.

2. Physical data: Well stabilization parameters must be measured during groundwater sampling. Water table level, groundwater dissolved oxygen (DO), conductivity, pH, temperature, turbidity, and oxidation-reduction potential (ORP) data will be used to determine when groundwater samples are representative of the groundwater from the aquifer being investigated.

3. PSLs: This SWMU 26 RFI requires chemical data that can be used to characterize the site and to compare target analyte concentrations to regulatory criteria in the RFI Report.

   The risk and regulatory criteria applicable to SWMU 26 include the Federal Maximum Contaminant Levels (MCLs); IDEM Risk Integrated System of Closure (RISC) Default Closure Levels, Groundwater (G-DCLs), and the USEPA Regions 3, 6, and 9 Regional Screening Levels, Tapwater (T-RSLs). The MCLs were selected as the primary PSLs. For analytes that do not have an MCL, the IDEM RISC G-DCLs were selected, followed by the T-RSL values. This is because groundwater remedial decisions are primarily based on exceedances of the MCLs. A comprehensive list of the criteria that were reviewed to determine the applicable PSLs for each target analyte is provided in Appendix E.

To conduct comparisons of site data to screening values for groundwater and to begin delineation of potential contamination, the selected laboratory must be able to achieve Limits of Quantitation (LOQs) that are low enough to measure constituent concentrations that are less than the PSLs. Analytical data reported by the laboratory use the following reporting conventions: All results below the Detection Limit (DL) will be considered nondetects; positive results reported at concentrations between the DL and LOQ will be reported with a “J” qualifier; and analytes not found (not detected) in a sample will be reported at the Limit of Detection (LOD) with a "U" qualifier. PSLs have been included in Worksheet No. 15 to ensure laboratory sensitivity is sufficient to meet the project needs. “J” flagged data will be accepted to achieve project goals; however, greater scrutiny will be applied in these cases. Additionally, the inability to quantify select analytes to PSL levels with confidence will be addressed in the data quality report within the RFI Report. In cases where the laboratory LODs are greater than the PSLs, if the analyte is not detected, the LOD will be reported and "U" qualified. This is consistent with the USEPA Risk Assessment Guidance for Superfund, Part A (USEPA, 1989). An evaluation of these analytes will also be presented in a data quality report.

4. Background data: Data between the background (upgradient) and downgradient wells will be compared to determine if groundwater concentrations in the downgradient wells are greater than the concentrations in the upgradient wells. Decision rules for the use of this data are presented in Section 11.4.

5. Survey data: Survey data must be collected and documented in order to accurately map the sampling locations and the pieziometric surface. Data will be collected for all monitoring wells on the site.

11.3 STUDY AREA BOUNDARIES

Based on the CSM, the study area will include the monitoring well network that already exists at the site, plus one additional well in the southeast location.

The groundwater population of interest is groundwater that may have been contaminated by releases from the Highway-58 Dump Site B. This is generally groundwater located downgradient of the potential releases. Upgradient groundwater is also of interest to provide a reference population and to ultimately determine if any identified contaminants are site related.

The following items address the horizontal, vertical, and temporal boundaries. The study area may be expanded in the horizontal and vertical direction during an additional round of sampling and well installation if further investigation is required based on the decision rules presented in Section 11.4.

Horizontal: The horizontal boundary of the study area is defined by the monitoring well network. The populations of interest are the groundwater in the upper water-bearing zone identified at SWMU 26 that

may have been impacted by debris disposal and releases from contaminated soil or debris. Upgradient groundwater is also of interest to provide a reference population and to help delineate potential contamination.

Vertical: The vertical boundary of the study is defined as the upper water-bearing zone, which is estimated to be located approximately 15 feet to 17 feet bgs in the area of the dump site, with the exception of 26MW01, where the depth to the upper water-bearing zone is 59-62 feet bgs. Monitoring well 26MW01 is located above the massive sandstone outcrop at a higher elevation than the dump site.

Temporal: All target analyte concentrations are anticipated to be relatively unchanged (stable) over the course of time needed to conduct the environmental investigations and into the foreseeable future; therefore, no temporal constraints exist. The SWMU 26 RFI initial screening sampling event field activities are scheduled for Spring 2011.

Background: The chemical concentrations in upgradient well (26MW01) in the upper water-bearing zone will be considered in the evaluation of the data in the event that a chemical concentration exceeds a PSL. Data from this upgradient well will ultimately be used to determine whether the chemical is site related or from some other source.

11.4 ANALYTIC APPROACH

Following the sampling event, the analytical results will be used to determine whether or not chemical concentrations in the site groundwater exceed the PSLs.

The decision rules for the initial screening sampling event of this investigation are as follows:

1. If target analyte concentrations in all groundwater samples are less than PSLs, then recommend NFA.

2. If any downgradient groundwater target analyte concentration exceeds its PSL and the upgradient groundwater concentrations, then recommend further investigation.

   Further investigation would include development of a regional groundwater background data set using available data (if possible) that could be used in a data set to data set comparison to additional rounds of data collected from the downgradient wells to determine if identified contaminants are site related. The additional investigation, if needed, would be designed to complete the delineation of potentially unacceptable contamination and to ensure that enough data have been collected to support an evaluation of corrective measures in a corrective measures study (CMS). If the mean background data set concentrations are greater than any target analyte PSL, the mean background concentration will replace the PSL for that target analyte for future comparisons and decision making.

Any decision rules for data collected during future investigations will be presented in an Addendum to this SAP.

11.5 PERFORMANCE OR ACCEPTANCE CRITERIA

Comparisons of target analyte groundwater concentrations to PSLs and upgradient groundwater concentrations are planned for the initial screening sampling event. The Project Team will use the results of the sampling event, to determine whether the amount and type of data collected are sufficient to support the attainment of project objectives. If all data have been collected as planned herein and no data usability issues exist, the data will be considered sufficient to meet project objectives. Refer to Worksheet No. 37 for a discussion of the data usability process.

Performance and acceptance criteria for subsequent sampling events will be determined by Project Team consensus as described previously.

11.6 PLAN FOR OBTAINING DATA

Based on the information presented above, a detailed plan was developed to obtain the necessary data to answer the problem for the SWMU 26 RFI. The sampling design and rationale for data that will be collected are provided in Worksheet No. 17.

Subsequent sampling may include groundwater, sediment and surface water media. Specific decisions and details regarding the additional sampling locations and analytical testing requirements will be made by the Project Team based on an evaluation of groundwater data from the initial and subsequent sampling events. Additional sampling if deemed necessary, will be described in an addendum to this SAP.

SAP Worksheet No. 12 -- Measurement Performance Criteria Table – Field Quality Control Samples

(UFP-QAPP Manual Section 2.6.2)

Quality Control (QC) Sample	Analytical Group	Frequency	Data Quality Indicators (DQIs)	Measurement Performance Criteria (MPCs)	QC Sample Assesses Error for Sampling (S), Analytical (A) or Both (S&A)
Trip Blank	VOCs	One per cooler of VOC samples shipped to laboratory.	Bias/ Contamination	No analytes ≥ ½ LOQ, except common laboratory contaminants, which must be < LOQ.	S & A
Equipment Rinsate Blank	All analytical groups	One per 20 samples per matrix per sampling equipment[1].	Bias/ Contamination	No analytes ≥ ½ LOQ, except common laboratory contaminants, which must be < LOQ.	S & A
Filtered Rinsate Blank	Dissolved Metals (if necessary due to high turbidity)	One per filter brand[2].	Bias/ Contamination	No analytes ≥ ½ LOQ, except common laboratory contaminants, which must be < LOQ.	S & A
Field Duplicate (FD)	All analytical groups	One per 20 field samples.	Precision	Values > 5X LOQ: Relative Percent Difference (RPD) must be ≤30 (aqueous)[3,4].	S & A
Cooler Temperature Indicator	All analytical groups	One per cooler.	Representativeness	Temperature must be less than 6 degrees Celsius (<6 °C).	S

1 – Equipment rinsate blanks will be collected if non-dedicated submersible pumps or other equipment are used.
2 – A filtered rinsate blank will be collected if filtered samples (e.g., Dissolved Metals) are collected.
3 – If duplicate values for non-metals are < 5x LOQ, absolute difference should be < 2x LOQ.
4 – If duplicate values for metals are < 5x LOQ, absolute difference should be < 4x LOQ.

SAP Worksheet No. 13 -- Secondary Data Criteria and Limitations Table

(UFP-QAPP Manual Section 2.7)

Secondary Data	Data Source (originating organization, report title and date)	Data Generator(s) (originating organization, data types, data generation / collection dates)	How Data Will Be Used	Limitations on Data Use
Site Photographs	J. Wright, November 2005	J. Wright, November 2005	Data will be used to identify well locations and wells needing repair.	None.
Hydrogeologic Investigation of Waste Disposal Sites	Geotechnical Laboratory USACE Waterways Experiment Station, Hydrogeologic Investigation of Waste Disposal Sites at the Naval Weapons Support Center, Crane, Indiana, April 1982	Geotechnical Laboratory USACE WES, April 1982	Background information, development of CSM.	None.
Initial Assessment Study	Initial Assessment Study of Naval Weapons Support Center, Crane, Indiana	NEESA, May 1983	Background information.	None.
Preliminary Review/Visual Site Inspection	A.T. Kearny, Preliminary Review/Visual Site Inspection Report, March 1987.	Kearny, Site Description, March 1987.	Background information, development of CSM.	Used to provide historical data on site; conclusions in report were found to be unreliable.
Interim Measures Report	Interim Measures Report of SWMU 26 Highway 58 Dump Site B, Naval Surface Warfare Center Crane, Crane, Indiana, October 1997	Morrison Knudsen, October 1997	Data will be used to evaluate environmental risks.	None, the data were fully validated.

SAP Worksheet No. 14 -- Summary of Project Tasks

(UFP-QAPP Manual Section 2.8.1)

14.1 FIELD INVESTIGATION TASK PLAN

The field tasks are summarized below. A short description of these tasks is also provided.

- Mobilization/Demobilization
- Site-Specific Health and Safety Training
- Utility Clearance
- Monitoring Equipment Calibration
- Sample Collection Tasks
- Groundwater Well Installation and Development
- Groundwater Sampling
- Investigation-Derived Waste (IDW) Management
- Global Positioning System (GPS) Locating
- Field Decontamination Procedures
- Field Documentation Procedures
- Sample Custody and Shipment Tasks
- Quality Control Tasks

Mobilization/Demobilization

Mobilization will consist of the delivery of all equipment, materials, and supplies to the site, complete assembly in satisfactory working order of all such equipment at the site, and satisfactory storage at the site of all such materials and supplies. Tetra Tech will coordinate with the Navy to identify appropriate locations for the storage of equipment and supplies. Site-specific health and safety training for all Tetra Tech subcontractors will be provided as part of site mobilization.

Demobilization will consist of the prompt and timely removal of all equipment, materials, and supplies from the site following completion of the work. Demobilization includes the cleanup and removal of IDW generated during the conduct of the investigation.

Site-Specific Health and Safety Training

There are no specialized/non-routine project specific training requirements or certifications needed by personnel to successfully complete the project or tasks. All field personnel will have appropriate training to conduct the field activities to which they are assigned. Each site worker will be required to have

completed the OSHA 40-hour course (and 8-hour refresher, if applicable) in Health and Safety Training. Safety requirements are addressed in greater detail in the site-specific HASP.

Utility Clearance

Prior to commencing any work at NSA Crane, the Comprehensive Work Approval Process (CWAP) will be followed. The CWAP will identify constraints in the work area, such as the locations of eagle's nests, archaeological sites, wetlands, etc., that may affect work at the site and other requirements that must be met prior to commencing work. One week prior to the commencement of any subsurface intrusive activities, the Tetra Tech FOL or designee will contact Indiana Underground Plant Protection Services (IUPPS) to complete a utility clearance ticket for the areas under investigation. Work permits, if required by the facility, will be obtained prior to conducting field activities. The Tetra Tech FOL will be responsible for coordinating these activities.

Monitoring Equipment Calibration

These procedures are described in Worksheet No. 22.

Sample Collection Tasks

Site-specific Standard Operating Procedures (SOPs) have been developed for field activities at this NSA Crane site, including sample collection tasks. These SOPs are presented in Appendix A. Sample labeling will be in accordance with SOP-02 (Sample Labeling, Appendix A), and the sample numbering scheme will be in accordance with SOP-03 (Sample Identification and Nomenclature, Appendix A). Methods for recording data will be in accordance with SOP-04 (Sample Custody and Documentation of Field Activities, Appendix A), and the selection of sample containers, sample preservation, packaging, and shipping will be in accordance with SOP-05 (Sample Preservation, Packaging, and Shipping, Appendix A).

The sampling and analysis program is outlined in Worksheet No. 18, and the sampling requirements for each type of analyses (i.e., bottleware, preservation, holding time) are listed in Worksheet No. 19. Field and laboratory QC samples will also be collected as outlined in Worksheet No. 20.

Groundwater Well Installation, Development, and Sampling

An additional groundwater well will be installed in the upper water-bearing zone in accordance with SOP-08 (Drilling and Geologic Logging of Boreholes in Rock, Appendix A) and SOP-09 (Monitoring Well Installation, Appendix A). Three of the pre-existing wells are screened in the upper water-bearing zone, and these three pre-existing wells and the new monitoring well will be developed and sampled as

described in accordance with SOP-10 (Monitoring Well Development, Appendix A), SOP-11 (Measurement of Water Levels, Appendix A), SOP-12 (Low Flow Well Purging and Stabilization, Appendix A), SOP-13 (Monitoring Well Sampling, Appendix A), and SOP-14 (Calibration and Care of Water Quality Meters, Appendix A).

Investigation-Derived Waste Management

It is not anticipated that significant volumes of solid or semi-solid IDW in the form of soil or rock will be generated during field activities, including the installation of a new monitoring well and the collection of groundwater samples. If gross contamination is encountered [e.g., such as free product or soil with Photoionization Detector (PID) readings greater than 100 parts per million (ppm)], the material will be segregated and placed in a 55-gallon drum. Any grossly contaminated groundwater that is brought to the surface will also be placed in a 55-gallon drum. Grossly contaminated material will be securely staged until arrangements are made for proper off-site disposal.

IDW that is generated, including personal protective equipment (PPE) and decontamination fluids, will be handled in accordance with SOP-07 (Management of Investigation-Derived Waste, Appendix A).

Global Positioning System Locating

A GPS unit will be used to initially locate the monitoring wells in accordance with SOP-01 (Global Positioning System, Appendix A). The GPS equipment will be checked on control monuments before and after day's use, and these checks will be documented in the field notebook. To ensure sub-meter accuracy, the GPS SOP requires a minimum of six satellites to capture a position.

Surveying

An Indiana-licensed surveyor will be subcontracted by Tetra Tech to survey the horizontal location within an accuracy of 0.1 feet and the vertical elevation within an accuracy of 0.01 feet for the new monitoring well. The monitoring well will be surveyed in accordance with IDEM regulations. The location will be surveyed relative to the coordinates of established site benchmarks, or the nearest United States Geological Survey (USGS) benchmark. Survey coordinate data will be collected and documented in order to map the sampling locations. The survey will be relative to the Indiana State Plane Coordinate System (West Zone).

Field Decontamination Procedures

Sample containers will be provided certified clean (I-Chem 300 or equivalent) from Empirical. Decontamination of sampling equipment will not be necessary for this project if only dedicated and disposable hand trowels will be used. However, if decontamination is necessary, the requirements

outlined in this section will apply. Decontamination of reusable sampling equipment (e.g., non-dedicated bladder pumps or drilling equipment) will be conducted prior to sampling and between samples at each location. Decontamination of equipment will be conducted according to the sequence established in SOP-06 (Decontamination of Field Sampling Equipment, Appendix A).

Field Documentation Procedures

Field documentation will be performed in accordance with SOP-04 (Sample Custody and Documentation of Field Activity, Appendix A).

A summary of all field activities will be properly recorded in a bound logbook with consecutively numbered pages that cannot be removed. Logbooks will be assigned to field personnel and will be stored in a secured area when not in use.

At a minimum, the following information will be recorded in the site logbook:

- Name of the person to whom the logbook is assigned.
- Project name.
- Project start date.
- Names and responsibilities of on-site project personnel including subcontractor personnel.
- Arrival/departure of site visitors.
- Arrival/departure of equipment.
- Sampling activities and sample log sheet references.
- Description of subcontractor activities.
- Sample pick-up information including chain-of-custody form numbers, air bill numbers, carriers, times, and dates.
- Descriptions of monitoring well installation activities and operations, if monitoring wells are deemed necessary.
- Health and safety issues.
- Description of photographs including date, time, photographer, picture number, location, and compass direction of each photograph.

All logbook entries will be written in ink, and no erasures will be made. If an incorrect entry is made, striking a single line through the incorrect information will make the correction, and the person making the correction will initial and date the change.

Sample Custody and Shipment Tasks

Sample custody and shipment tasks are defined in SOP-05 (Sample Preservation, Packaging, and Shipping, Appendix A) and are discussed in Worksheet No. 27.

Quality Control Tasks

QA/QC samples will be collected at frequencies listed in Worksheet No. 12.

14.2 ADDITIONAL PROJECT-RELATED TASKS

Additional project-related tasks include:

- Analytical tasks
- Data generation procedures
- Data handling and management
- Data tracking and control
- Assessment and oversight
- Data review
- Project reports

Analytical Tasks

Chemical analyses for VOCs, SVOCs (including low level PAHs), and metals (total and dissolved) will be performed by Empirical, which is a current Department of Defense (DoD) Environmental Laboratory Accreditation Program (ELAP) accredited laboratory. Copies of the DoD ELAP accreditation for Empirical are included in Appendix B. Empirical will meet the PSLs specified in Worksheet No. 15 and will perform the chemical analyses following laboratory-specific SOPs (see Worksheet Nos. 19 and 23) that were developed based on the methods listed in Worksheet Nos. 19 and 30. Copies of laboratory SOPs are included in Appendix B.

Groundwater results will be reported by the laboratory in each analytical data package and associated electronic data deliverables (EDDs). This information will also be captured in the project database, which will eventually be uploaded to Naval Installation Restoration information Solution (NIRIS).

The analytical data packages provided by Empirical will be in a contract laboratory program (CLP)-like format and will be fully validatable and contain raw data, summary forms for all sample and laboratory method blank data, and summary forms containing all method specific quality control (results, recoveries, relative percent differences, relative standard deviations, and/or percent differences, etc.).

Data Generation Procedures

- Project documentation and records include the following:
  - Field sample collection and field measurement records as described in Worksheet Nos. 27 and 29.
  - Laboratory data package deliverables as described in the analytical specifications.
  - Data assessment documents and records as listed in Worksheet No. 29.
- Data recording formats are described in Worksheet No. 27.

Data Handling and Management

After the RFI is completed, the field sampling log sheets will be organized by date and medium and filed in the project files. The field logbooks for this project will be used only for this site and will also be categorized and maintained in the project files after the completion of the field program. Project personnel completing concurrent field sampling activities may maintain multiple field logbooks. When possible, logbooks will be segregated by sampling activity. The field logbooks will be titled based on date and activity. The data handling procedures to be followed by Empirical will meet the requirements of the technical specifications. The electronic data results will be automatically downloaded into the Tetra Tech database in accordance with the proprietary Tetra Tech processes.

Data Tracking and Control

The Tetra Tech PM (or designee) is responsible for the overall tracking and control of data generated for the project.

- **Data Tracking**. Data are tracked from generation to archiving in the Tetra Tech project-specific files. The Tetra Tech Project Chemist (or designee) is responsible for tracking the samples collected and shipped to Empirical. Upon receipt of the data packages from Empirical, the Tetra Tech Project Chemist will oversee the data validation effort, which includes verifying that the data packages are complete and results for all samples have been delivered by Empirical.

- **Data Storage, Archiving, and Retrieval**. The data packages received from Empirical are tracked in the data validation logbook. After the data are validated, the data packages are entered into the Tetra Tech Navy CLEAN file system and archived in secure files. The field records including field log books, sample logs, chain-of-custody records, and field calibration logs will be submitted by the Tetra Tech FOL to be entered into the Navy CLEAN file system prior to archiving in secure project files. The project files are audited for accuracy and completeness. At the completion of the Navy contract, the records will be stored by Tetra Tech.

- **Data Security**. Access to Tetra Tech project files is restricted to designated personnel only. Records can only be borrowed temporarily from the project file using a sign-out system. The Tetra Tech Data Manager maintains the electronic data files, and access to the data files is restricted to qualified personnel only. File and data backup procedures are routinely performed.

Assessment and Oversight

Refer to Worksheet No. 32 for assessment findings and corrective actions and to Worksheet No. 33 for QA Management Reports.

Data Review

Data verification is described in Worksheet No. 34, data validation is described in Worksheet Nos. 35 and 36, and usability assessment is described in Worksheet No. 37.

Project Reports – Draft and final versions of project reports will be prepared and submitted to the Navy and IDEM for review. The reports will include the following sections:

- Executive Summary – will include a brief description of the work conducted and the findings.

- Introduction and Background – will include a description of the history of operations and activities at the site and a summary of any previous investigations and removal actions.

- Description of Field Investigations – will include a summary of the work performed in accordance with the approved SAP and any field modifications as documented by the Tetra Tech FOL. This section will include maps showing the sampling locations and tables summarizing the data collected.

- Data Quality – will include a summary of quantitative analytical performance indicators such as completeness, precision, accuracy, bias, and sensitivity and qualitative indicators such as representativeness and comparability. This section includes a reconciliation of project data with the DQOs and an identification of deviations from this SAP.

  A data usability assessment will be used to identify significant deviations in analytical performance that could affect the ability to meet project objectives. The elements of this review are presented in Worksheet No. 37.

- Nature and Extent of Contamination – will include a discussion of the contamination detected in each medium sampled in relation to the CSM of the site. This section will note the removals previously conducted (if applicable), contamination addressed, and any additional contaminants found during this field effort. Detected contaminant concentrations will be tabulated for each medium and depicted on maps.

- Contaminant Fate and Transport – will include a description of the contaminants detected and their behavior in soil, bedrock, groundwater, surface water, and sediment, particularly with emphasis on the future migration of these contaminants to any possible exposure areas.

- Summary and Conclusions – includes a summary of the findings, conclusions as to whether delineation of contamination is adequate, and recommendations for further investigations, if needed.

Tetra Tech will submit the draft report and respond to comments received on the draft report before any additional sampling begins. The final version of the report will be submitted in hardcopy and electronic format to the project stakeholders.

SAP Worksheet No. 15 – Reference Limits and Evaluation Table

(UFP-QAPP Manual Section 2.8.1)

Matrix: Groundwater
Analytical Group: VOCs

Analyte	CAS Number	PSL (µg/L)	PSL Reference[1]	PQLG (µg/L)	Empirical		
					LOQ (µg/L)	LOD (µg/L)	DL (µg/L)
1,1,1-Trichloroethane	71-55-6	200	MCL	67	1.0	0.5	0.25
1,1,2,2-Tetrachloroethane	**79-34-5**	**0.9**	**G-DCL**	**0.30**	**1.0**	**0.5**	**0.25**
1,1,2-trichloro-1,2,2-trifluoroethane (Freon 113)	76-13-1	5,900	T-RSL	2,000	1.0	0.5	0.25
1,1,2-Trichloroethane	79-00-5	5	MCL	1.7	1.0	0.5	0.25
1,1-Dichloroethane	75-34-3	990	G-DCL	330	1.0	0.5	0.25
1,1-Dichloroethene	75-35-4	7	MCL	2.3	1.0	0.5	0.25
1,2,3- Trichlorobenzene	87-61-6	2.9	T-RSL	0.97	1.0	0.5	0.25
1,2,4-Trichlorobenzene	120-82-1	70	MCL	23	1.0	0.5	0.25
1,2-Dibromo-3-chloropropane (DBCP)	**96-12-8**	**0.2**	**MCL**	**0.067**	**2.0**	**1.0**	**0.5**
1,2-Dibromoethane (EDB)	**106-93-4**	**0.05**	**MCL**	**0.017**	**1.0**	**0.5**	**0.25**
1,2-Dichlorobenzene	95-50-1	600	MCL	200	1.0	0.5	0.25
1,2-Dichloroethane	107-06-2	5	MCL	1.7	1.0	0.5	0.25
1,2-Dichloropropane	78-87-5	5	MCL	1.7	1.0	0.5	0.25
1,3-Dichlorobenzene	541-73-1	80	G-DCL	27	1.0	0.5	0.25
1,4-Dichlorobenzene	106-46-7	75	MCL	25	1.0	0.5	0.25
2-Butanone (MEK)	78-93-3	8,400	G-DCL	2,800	10	5.0	2.5
2-Hexanone	**591-78-6**	**4.7**	**T-RSL**	**1.6**	**5.0**	**2.5**	**1.5**
4-Methyl-2-pentanone (MIBK)	108-10-1	2,200	G-DCL	730	10	5.0	2.5

Analyte	CAS Number	PSL (µg/L)	PSL Reference[1]	PQLG (µg/L)	Empirical		
					LOQ (µg/L)	LOD (µg/L)	DL (µg/L)
Acetone	67-64-1	6,900	G-DCL	2,300	10	5.0	2.5
Benzene	71-43-2	5	MCL	1.7	1.0	0.5	0.25
Bromochloromethane	74-97-5	NC	None	NA	1.0	0.5	0.25
Bromodichloromethane	75-27-4	80	MCL	27	1.0	0.5	0.25
Bromoform	75-25-2	80	MCL	27	2.0	1.0	0.5
Bromomethane	74-83-9	11	G-DCL	3.7	1.0	0.5	0.25
Carbon disulfide	75-15-0	1,300	G-DCL	430	1.0	0.5	0.25
Carbon tetrachloride	56-23-5	5	MCL	1.7	1.0	0.5	0.25
Chlorobenzene	108-90-7	100	MCL	33	1.0	0.5	0.25
Chloroethane	75-00-3	62	G-DCL	21	1.0	0.5	0.25
Chloroform	67-66-3	80	MCL	27	1.0	0.5	0.25
Chloromethane	74-87-3	19	T-RSL	6.3	1.0	0.5	0.25
cis-1,2-Dichloroethene	156-59-2	70	MCL	23	1.0	0.5	0.25
cis-1,3-Dichloropropene	10061-01-5	4	T-RSL	1.3	1.0	0.5	0.25
Cyclohexane	110-82-7	1,300	G-DCL	430	1.0	0.5	0.25
Dibromochloromethane	124-48-1	80	MCL	27	1.0	0.5	0.25
Dichlorodifluoromethane	75-71-8	39	T-RSL	13	1.0	0.5	0.25
Ethylbenzene	100-41-4	700	MCL	230	1.0	0.5	0.25
Isopropylbenzene	98-82-8	830	G-DCL	280	1.0	0.5	0.25
Methyl acetate	79-20-9	3,700	T-RSL	1,200	2.0	1.0	0.5
Methylcyclohexane	108-87-2	NC	None	NA	1.0	0.5	0.25
Methylene chloride	75-09-2	5	MCL	1.7	4.0	2.0	1.0
Methyl-tert-butyl ether	1634-04-4	40	G-DCL	13	1.0	0.5	0.25

Analyte	CAS Number	PSL (µg/L)	PSL Reference[1]	PQLG (µg/L)	Empirical		
					LOQ (µg/L)	LOD (µg/L)	DL (µg/L)
Styrene	100-42-5	100	MCL	33	1.0	0.5	0.25
Tetrachloroethene	127-18-4	5	MCL	1.7	1.0	0.5	0.25
Toluene	108-88-3	1,000	MCL	330	1.0	0.5	0.25
trans-1,2-Dichloroethene	156-60-5	100	MCL	33	1.0	0.5	0.25
trans-1,3-Dichloropropene	10061-02-6	4.0	T-RSL	1.3	1.0	0.5	0.25
Trichloroethene	79-01-6	5.0	MCL	1.7	1.0	0.5	0.25
Trichlorofluoromethane	75-69-4	1,700	G-DCL	570	1.0	0.5	0.25
Vinyl chloride	75-01-4	2	MCL	0.67	1.0	0.5	0.25
Xylenes (total)	1330-20-7	10,000	MCL	3,300	4.0	2.0	1.0

CAS – Chemical Abstracts Service
µg/L – micrograms per liter
PQLG – Project Quantitation Limit Goal
NC – No Criteria

1 The PSL references for groundwater are based on a hierarchy of levels: MCL – USEPA Maximum Contaminant Level (May, 2009); G-DCL – IDEM Groundwater Default Closure Level (May, 2009); T-RSL - USEPA Regions 3, 6, and 9 Regional Screening Level for Soil, Tapwater (November, 2010); Refer to Appendix E for further explanation and justification of PSLs.

Bolded rows indicate that the PSL is between the laboratory LOQ and LOD. The Project Team has agreed to accept this data for decision making if results below the LOQ are "J" qualified and the results are discussed in the uncertainties section of the RFI Report.

Shaded and Bolded rows indicate the PSL is less than the LOD; therefore, the Project Team has agreed to report non-detected results at the LOD and any limitations on data use that result from having detection limits that are greater than PSLs will be described in the RFI Report.

Matrix: Groundwater
Analytical Group: SVOCs (including low level PAHs)

Analyte	CAS Number	PSL (µg/L)	PSL Reference[1]	PQLG (µg/L)	Empirical		
					LOQ (µg/L)	LOD (µg/L)	DL (µg/L)
1,2,4,5-Tetrachlorobenzene	**95-94-3**	**1.1**	**T-RSL**	**0.37**	**5.0**	**2.5**	**1.25**
1,1'-Biphenyl	92-52-4	180	T-RSL	60	5.0	2.5	1.25
1,4-Dioxane	**123-91-1**	**0.67**	**T-RSL**	**0.22**	**1.0**	**0.50**	**0.25**
2,2'-Oxybis(1-chloropropane)	**108-60-1**	**4.2**	**G-DCL**	**1.4**	**5.0**	**2.5**	**1.25**
2,3,4,6-Tetrachlorophenol	58-90-2	110	T-RSL	37	5.0	2.5	1.25
2,4,5-Trichlorophenol	95-95-4	3,600	G-DCL	1,200	5.0	2.5	1.25
2,4,6-Trichlorophenol	**88-06-2**	**3.6**	**G-DCL**	**1.2**	**5.0**	**2.5**	**1.25**
2,4-Dichlorophenol	120-83-2	110	G-DCL	37	5.0	2.5	1.25
2,4-Dimethylphenol	105-67-9	730	G-DCL	240	20	10	5.0
2,4-Dinitrophenol	51-28-5	73	G-DCL	24	50	25	10
2,4-Dinitrotoluene	**121-14-2**	**0.22**	**T-RSL**	**0.073**	**5.0**	**2.5**	**1.25**
2,6-Dinitrotoluene	**606-20-2**	**3.7**	**T-RSL**	**1.2**	**5.0**	**2.5**	**1.25**
2-Chloronaphthalene	91-58-7	610	G-DCL	200	5.0	2.5	1.25
2-Chlorophenol	95-57-8	38	G-DCL	13	5.0	2.5	1.25
2-Methylphenol (o-Cresol)	95-48-7	1,800	G-DCL	600	5.0	2.5	1.25
2-Nitroaniline	88-74-4	110	G-DCL	37	20	10	5.0
2-Nitrophenol	88-75-5	7.3	T-RSL	2.4	5.0	2.5	1.25
3,3'-Dichlorobenzidine	**91-94-1**	**1.9**	**G-DCL**	**0.63**	**5.0**	**2.5**	**1.25**
3-Methylphenol (m-Cresol)	108-39-4	180	T-RSL	60	5.0	2.5	1.25
3-Nitroaniline	99-09-2	NC	None	NA	20	10	5.0
4,6-Dinitro-2-methylphenol	**534-52-1**	**0.29**	**T-RSL**	**0.097**	**20**	**10**	**5.0**

Analyte	CAS Number	PSL (µg/L)	PSL Reference[1]	PQLG (µg/L)	Empirical		
					LOQ (µg/L)	LOD (µg/L)	DL (µg/L)
4-Bromophenyl phenyl ether	101-55-3	NC	None	NA	5.0	2.5	1.25
4-Chloro-3-methyl phenol	59-50-7	370	T-RSL	120	5.0	2.5	1.25
4-Chloroanaline	106-47-8	150	G-DCL	50	5.0	2.5	1.25
4-Chlorophenyl phenyl ether	7005-72-3	NC	None	NA	5.0	2.5	1.25
4-Methylphenol (p-Cresol)	106-44-5	180	G-DCL	60	5.0	2.5	1.25
4-Nitroaniline	**100-01-6**	**3.4**	**T-RSL**	**1.1**	**20**	**10**	**5.0**
4-Nitrophenol	100-02-7	NC	None	NA	20	10	5.0
Acetophenone	98-86-2	370	T-RSL	120	5.0	2.5	1.25
Atrazine	**1912-24-9**	**3**	**MCL**	**1.0**	**5.0**	**2.5**	**1.25**
Benzaldehyde	100-52-7	370	T-RSL	120	5.0	2.5	1.25
Bis(2-chloroethoxy)methane	111-91-1	11	T-RSL	3.7	5.0	2.5	1.25
Bis(2-chloroethyl)ether	**111-44-4**	**0.15**	**G-DCL**	**0.050**	**5.0**	**2.5**	**1.25**
Bis(2-ethylhexyl)phthalate	117-81-7	6	MCL	2.0	5.0	2.5	1.25
Butyl benzyl phthalate	85-68-7	7,300	G-DCL	2,400	5.0	2.5	1.25
Caprolactam	105-60-2	1,800	T-RSL	600	5.0	2.5	1.25
Carbazole	86-74-8	43	G-DCL	14	5.0	2.5	1.25
Dibenzofuran	132-64-9	15	G-DCL	5.0	5.0	2.5	1.25
Diethyl phthalate	84-66-2	29,000	G-DCL	9,700	5.0	2.5	1.25
Dimethyl phthalate	131-11-3	36,000	G-DCL	12,000	5.0	2.5	1.25
Di-n-butyl phthalate	84-74-2	3,600	G-DCL	1,200	5.0	2.5	1.25
Di-n-octyl phthalate	117-84-0	20	G-DCL	6.7	5.0	2.5	1.25
Hexachlorobenzene	**118-74-1**	**1.0**	**MCL**	**0.33**	**5.0**	**2.5**	**1.25**
Hexachlorobutadiene	87-68-3	11	G-DCL	3.7	5.0	2.5	1.25

Analyte	CAS Number	PSL (µg/L)	PSL Reference[1]	PQLG (µg/L)	Empirical		
					LOQ (µg/L)	LOD (µg/L)	DL (µg/L)
Hexachlorocyclopentadiene	77-47-4	50	MCL	17	5.0	2.5	1.25
Hexachloroethane	67-72-1	36	G-DCL	12	5.0	2.5	1.25
Isophorone	78-59-1	900	G-DCL	300	5.0	2.5	1.25
Nitrobenzene	**98-95-3**	**4.3**	**G-DCL**	**1.4**	**5.0**	**2.5**	**1.25**
N-Nitrosodi-n-propylamine	**621-64-7**	**0.12**	**G-DCL**	**0.040**	**5.0**	**2.5**	**1.25**
N-Nitrosodiphenylamine	86-30-6	170	G-DCL	57	5.0	2.5	1.25
Pentachlorophenol	**87-86-5**	**1**	**MCL**	**0.33**	**20**	**10**	**5.0**
Phenol	108-95-2	11,000	G-DCL	3,700	5.0	2.5	1.25
PAHs[2]							
2-Methylnaphthalene	91-57-6	31	G-DCL	10	0.2	0.1	0.05
Acenaphthene	83-32-9	460	G-DCL	150	0.2	0.1	0.05
Acenaphthylene	208-96-8	71	G-DCL	24	0.2	0.1	0.05
Anthracene	120-12-7	2,300	G-DCL	770	0.2	0.1	0.05
Benzo(a)anthracene	56-55-3	1.2	G-DCL	0.40	0.2	0.1	0.05
Benzo(a)pyrene	50-32-8	0.2	MCL	0.067	0.2	0.1	0.05
Benzo(b)fluoranthene	205-99-2	1.2	G-DCL	0.40	0.2	0.1	0.05
Benzo(g,h,i)perylene	191-24-2	110	T-RSL	37	0.2	0.1	0.05
Benzo(k)fluoranthene	207-08-9	12	G-DCL	4.0	0.2	0.1	0.05
Chrysene	218-01-9	120	G-DCL	40	0.2	0.1	0.05
Dibenzo(a,h)anthracene	**53-70-3**	**0.12**	**G-DCL**	**0.040**	**0.2**	**0.1**	**0.05**
Fluoranthene	206-44-0	1,500	G-DCL	500	0.2	0.1	0.05
Fluorene	86-73-7	310	G-DCL	100	0.2	0.1	0.05
Indeno(1,2,3-c,d)pyrene	193-39-5	1.2	G-DCL	0.40	0.2	0.1	0.05

Analyte	CAS Number	PSL (µg/L)	PSL Reference[1]	PQLG (µg/L)	Empirical		
					LOQ (µg/L)	LOD (µg/L)	DL (µg/L)
Naphthalene	91-20-3	8.3	G-DCL	2.8	0.2	0.1	0.05
Phenanthrene	85-01-8	23	G-DCL	7.7	0.2	0.1	0.05
Pyrene	129-00-0	1,100	G-DCL	370	0.2	0.1	0.05

1 The PSL references for groundwater are based on a hierarchy of levels: MCL – USEPA Maximum Contaminant Level (May, 2009); G-DCL – IDEM Groundwater Default Closure Level (May, 2009); T-RSL - USEPA Regions 3, 6, and 9 Regional Screening Level for Soil, Tapwater (November, 2010); Refer to Appendix E for further explanation and justification of PSLs.
2 The low level PAHs will be analyzed by SW-846 Method 8270C Low Level Full Scan to obtain lower detection limits.

Bolded rows indicate that the PSL is between the laboratory LOQ and LOD. The Project Team has agreed to accept this data for decision making if results below the LOQ are "J" qualified and the results are discussed in the uncertainties section of the RFI Report.

Shaded and Bolded rows indicate the PSL is less than the LOD; therefore, the Project Team has agreed to report non-detected results at the LOD and any limitations on data use that result from having detection limits that are greater than PSLs will be described in the RFI Report.

Matrix: Groundwater
Analytical Group: Metals (Total and Dissolved)

Analyte	CAS Number	PSL (µg/L)	PSL Reference[1]	PQLG (µg/L)	Empirical		
					LOQ (µg/L)	LOD (µg/L)	DL (µg/L)
Aluminum	7429-90-5	3,700	T-RSL	1,200	200	100	50
Antimony	7440-36-0	6	MCL	2.0	3.0	2.0	1.0
Arsenic	7440-38-2	10	MCL	3.3	1.5	1.5	0.75
Barium	7440-39-3	2,000	MCL	670	40	20	10
Beryllium	**7440-41-7**	**4**	**MCL**	**1.3**	**5.0**	**2.0**	**1.0**
Cadmium	7440-43-9	5	MCL	1.7	1.5	0.50	0.25
Calcium	7440-70-2	NC	None	NA	5,000	2,000	1,000
Chromium	7440-47-3	100	MCL	33	10	4.0	2.0
Cobalt	**7440-48-4**	**1.1**	**T-RSL**	**0.37**	**3.1**	**2.5**	**1.3**
Copper	7440-50-8	1,300	MCL	430	10	8.0	4.0
Iron	7439-89-6	2,600	T-RSL	870	100	60	30
Lead	7439-92-1	15	MCL	5.0	3.0	3.0	1.5
Magnesium	7439-95-4	NC	None	NA	5,000	3,000	1,000
Manganese	7439-96-5	88	T-RSL	29	15	10	5.0
Mercury	7439-97-6	2.0	MCL	0.67	0.2	0.16	0.08
Nickel	7440-02-0	730	G-DCL	240	10	6.0	3.0
Potassium	7440-09-7	NC	None	NA	5,000	3,000	1,000
Selenium	7782-49-2	50	MCL	17	6.0	5.0	3.0
Silver	7440-22-4	180	G-DCL	60	10	2.0	1.0
Sodium	7440-23-5	NC	None	NA	5,000	3,000	1,000
Thallium	7440-28-0	2	MCL	0.67	2.0	1.0	0.75

Analyte	CAS Number	PSL (µg/L)	PSL Reference[1]	PQLG (µg/L)	Empirical		
					LOQ (µg/L)	LOD (µg/L)	DL (µg/L)
Vanadium	7440-62-2	18	T-RSL	6.0	13	10	5.0
Zinc	7440-66-6	11,000	G-DCL	3,700	20	10	5.0

1 The PSL references for groundwater are based on a hierarchy of levels: MCL – USEPA Maximum Contaminant Level (May, 2009); G-DCL – IDEM Groundwater Default Closure Level (May, 2009); T-RSL - USEPA Regions 3, 6, and 9 Regional Screening Level for Soil, Tapwater (November, 2010); Refer to Appendix E for further explanation and justification of PSLs.

Bolded rows indicate that the PSL is between the laboratory LOQ and LOD. The Project Team has agreed to accept this data for decision making if results below the LOQ are "J" qualified and the results are discussed in the uncertainties section of the RFI Report.

Shaded and Bolded rows indicate the PSL is less than the LOD; therefore, the Project Team has agreed to report non-detected results at the LOD and any limitations on data use that result from having detection limits that are greater than PSLs will be described in the RFI Report.

SAP Worksheet No. 16 -- Project Schedule / Timeline Table

(UFP-QAPP Manual Section 2.8.2)

Activities	Organization	Dates (MM/DD/YYYY)		Deliverable	Deliverable Due Date
		Anticipated Date(s) of Initiation	Anticipated Date of Completion		
Groundwater sampling	Tetra Tech	04/01/2011	04/15/2011	RFI Report (if no additional sampling)	12/26/2011 (draft) 10/05/2012 (final)
Additional groundwater sampling, if necessary	Tetra Tech	07/01/2011	07/15/2011	RFI Report (if additional sampling is performed)	03/26/2012 (draft) 01/05/2013 (final)

SAP Worksheet No. 17 – Sampling Design and Rationale

(UFP-QAPP Manual Section 3.1.1)

Wastes, debris, and associated contaminated soil have been removed from the SWMU 26 dump site. The sampling event proposed in this SAP is needed to determine if groundwater has been impacted by environmental contaminants at the site. As described in Worksheet No. 10, two water-bearing zones (upper and lower) have been identified under the site. These water-bearing zones are separated by a shale layer that inhibits the flow of groundwater between the zones. The upper water-bearing zone is closer to the former dump site and is between the former dump site and lower water-bearing zone. Therefore, the upper water-bearing zone will be the target of the initial sampling.

Existing monitoring wells are located in the upper water-bearing zone upgradient and downgradient of the site to the south and southwest. However, there are no monitoring wells downgradient and southeast of the site. Therefore, this sampling event will include the installation of one additional groundwater monitoring well in the upper water-bearing zone southeast of the site. The proposed location of that new well is shown on Figure 17-1. The sampling event will then include development of, and collection of one round of groundwater samples from the three existing and the one additional monitoring wells in the upper water-bearing zone; a slug test on each of these four wells; an elevation survey and groundwater level measurements from all SWMU 26 wells; and , inspection and repair of all SWMU 26 wells.

Groundwater samples will be collected from SWMU 26 to determine whether target analyte concentrations in the groundwater in the upper water-bearing zone exceed PSLs. If any PSLs are exceeded, then the Project Team will assess the results and determine if additional data is necessary to delineate the nature and extent of PSL exceedances at the site, which may include vertical and horizontal step-out samples. Vertical step-out sample locations would include the existing lower water-bearing zone monitoring wells, and horizontal step-out sample locations would include additional new monitoring wells placed in the upper water-bearing zone. Groundwater samples will be collected from the upgradient monitoring well - 26MW01 in the upper water-bearing zone - which will provide a reference population and help delineate possible contamination.

Materials that may have been present at SWMU 26 and have the potential to impact the groundwater include paper, paints, paint thinners, oils, scrap metal, drums, and asbestos-containing transite building siding. Soil samples collected during the 1995 and 1996 IM activity identified elevated levels of the following target analytes: PAHs - benzo(b)fluoranthene, benzo(k)fluoranthene, benzo(a)pyrene, and dibenz(a,h)anthracene; and metals - antimony, arsenic, barium, beryllium, cobalt, and lead. The herbicide methyl parathion was identified at one sample location above the IMCL, but it is not included in this investigation for the reasons described in Worksheet 10. It is possible that each of these target analytes, as well as others, migrated and leached into the SWMU 26 upper water-bearing zone of groundwater.

Groundwater Sampling

Groundwater samples will be collected from the three existing and one additional SWMU 26 groundwater monitoring wells in the upper water-bearing zone. The one additional monitoring well will be placed in the upper water-bearing zone to an approximate depth of 30 feet bgs in the vicinity of 26MW05 and 26MW09 (see Figure 17-1). Because the upper water-bearing zone may mimic the surface contour (as does the lower water-bearing zone), this new monitoring well will be located downgradient of the potential source (former dump site) and will be used to determine if there is any localized impact to the groundwater beneath SWMU 26.

Groundwater samples will be collected from the upper water-bearing zone and analyzed for VOCs, SVOCs (including low level PAHs), and total metals (and dissolved metals, if low flow sampling does not result in samples with a turbidity of less than 5 Nephelometric Turbidity Units [NTU]). Groundwater samples will also be analyzed for field quality parameters including water levels, pH, specific conductivity, turbidity, temperature, ORP, and DO to support field sampling decisions. After sample collection, a single well aquifer stress test (slug test) will be performed on each well. Existing wells will be repaired, if necessary, prior to collecting groundwater samples.

Field Quality Control Samples

Field QC samples will be collected as part of the investigation, including field duplicates, trip blanks, and equipment rinsate blanks. Worksheet No. 20 presents the field QC sample summary. Also, additional sample volume will be collected as necessary for the laboratory QC of matrix spike/matrix spike duplicate (MS/MSD) analyses (for VOCs and SVOCs) and MS/sample duplicate analyses (for metals).

SAP Worksheet No. 18 -- Sampling Locations and Methods/SOP Requirements Table

(UFP-QAPP Manual Section 3.1.1)

Sampling Location	ID Number	Matrix	Depth (feet bgs)	Analytical Group	Number of Samples (identify field duplicates)	Sampling SOP Reference[1]
26MW01	26MW0101	Groundwater	Deep (<60)	VOCs	1	SOP-10, SOP-11, SOP-12, SOP-13, SOP-14
				SVOCs/Low Level PAHs	1	
				Metals	1	
26MW02	26MW0201 and 26MWFDXXXXXX01[2]	Groundwater	Shallow (<20)	VOCs	1 + 1 FD	SOP-10, SOP-11, SOP-12, SOP-13, SOP-14
				SVOCs/Low Level PAHs	1 + 1 FD	
				Metals	1 + 1 FD	
26MW06	26 MW0601	Groundwater	Shallow (<20)	VOCs	1	SOP-10, SOP-11, SOP-12, SOP-13, SOP-14
				SVOCs/Low Level PAHs	1	
				Metals	1	
26MW10	26MW1001	Groundwater	Shallow (<20)	VOCs	1	SOP-08, SOP-09, SOP-10, SOP-11, SOP-12, SOP-13, SOP-14
				SVOCs/Low Level PAHs	1	
				Metals	1	
				SVOCs/Low Level PAHs	1	
				Metals	1	

1 SOP or worksheet that describes the sample collection procedures (Worksheet No. 21).
2 FD locations may change in the field based on visual and olfactory observations, and "XXXXXX" represents date collected.

SAP Worksheet No. 19 -- Analytical SOP Requirements Table

(UFP-QAPP Manual Section 3.1.1)

Matrix	Analytical Group	Analytical and Preparation Method/ SOP Reference[1]	Containers (number, size, and type)	Sample Volume (units)	Preservation Requirements (chemical, temperature, light protected)	Maximum Holding Time (preparation/ analysis)
Groundwater and aqueous QC samples	VOCs	SW-846 5030/8260B, Empirical SOP-202	Three 40-milliliter (mL) glass vials	5 mL	Hydrochloric acid (HCl) to pH<2; cool to ≤6 °C; no headspace	14 days to analysis
Groundwater and aqueous QC samples	SVOCs (Including Low Level PAHs)	SW-846 3510C/3520/ 8270C/8270C-Low, Empirical SOP-201/300	Two 1-liter (L) glass amber bottles	1,000 mL	Cool to ≤6 °C	7 days until extraction, 40 days to analysis
Groundwater and aqueous QC samples	Metals, Including Mercury (and Dissolved Metals)	SW-846 3010A/ 6010C/7470A, Empirical SOP-100/103/105	One 500-mL plastic bottle	50 mL / 30 mL for mercury	Nitric acid to pH <2; Cool to ≤6 °C	180 days to analysis except mercury, 28 days for mercury

Notes:

1 Specify the appropriate reference letter or number from the Analytical SOP References table (Worksheet No.23).

SAP Worksheet No. 20 -- Field Quality Control Sample Summary Table

(UFP-QAPP Manual Section 3.1.1)

Matrix	Analytical Group	No. of Sampling Locations	No. of Field Duplicates	No. of MS/MSDs[1]	No. of Equipment Blanks	No. of Trip Blanks	Total No. of Samples to Lab
Groundwater	VOCs	4	1	1/1	1	1	7
	SVOCs/Low Level PAHs	4	1	1/1	1	NA	6
	Total Metals	4	1	1/1	1	NA	6
	Dissolved Metals	0 Minimum, 4 Maximum	1	1/1	1[2]	NA	6

Notes:

1 Although the MS/MSD is not typically considered a field QC, it is included here because location determination is often established in the field. The MS/MSD are not included in the Total No. of Samples sent to the Lab. For Total and Dissolved Metals, a sample duplicate will be collected in place of an MSD.

2 The equipment blank for the Dissolved Metals, if collected, will be obtained by passing rinse water through a 0.45-micron filter.

SAP Worksheet No. 21 -- Project Sampling SOP References Table

(UFP-QAPP Manual Section 3.1.2)

Reference Number	Title, Revision Date and/or Number	Originating Organization of Sampling SOP	Equipment Type	Modified for Project Work? (Y/N)	Comments
SOP-01	Global Positioning System, December 2010, Revision 0	Tetra Tech	GPS unit	Y (project-specific)	Contained in Appendix A
SOP-02	Sample Labeling, December 2010, Revision 0	Tetra Tech	NA	Y (project-specific)	Contained in Appendix A
SOP-03	Sample Identification Nomenclature, March 2011, Revision 1	Tetra Tech	NA	Y (project-specific)	Contained in Appendix A
SOP-04	Sample Custody and Documentation of Field Activities, December 2010, Revision 0	Tetra Tech	Field logbook, sample log sheets, boring logs	Y (project-specific)	Contained in Appendix A
SOP-05	Sample Preservation, Packaging, and Shipping, December 2010, Revision 0	Tetra Tech	NA	Y (project-specific)	Contained in Appendix A
SOP-06	Decontamination of Field Sampling Equipment, December 2010, Revision 0	Tetra Tech	Decontamination equipment, scrub brushes, 5-gallon buckets, spray bottles, phosphate free detergent, deionized water	Y (project-specific)	Contained in Appendix A
SOP-07	Management of Investigation-Derived Waste, December 2010, Revision 0	Tetra Tech	NA	Y (project-specific)	Contained in Appendix A
SOP-08	Drilling and Geologic Logging of Boreholes in Rock, March2011, Revision 1	Tetra Tech	Drilling rig	Y (project-specific)	Contained in Appendix A
SOP-09	Monitoring Well Installation, March 2011, Revision 1	Tetra Tech	NA	Y (project-specific)	Contained in Appendix A
SOP-10	Monitoring Well Development, December 2010, Revision 0	Tetra Tech	NA	Y (project-specific)	Contained in Appendix A
SOP-11	Measurement of Water Levels, December 2010, Revision 0	Tetra Tech	NA	Y (project-specific)	Contained in Appendix A
SOP-12	Low-Flow Well Purging and Stabilization, December 2010, Revision 0	Tetra Tech	NA	Y (project-specific)	Contained in Appendix A
SOP-13	Monitoring Well Sampling, December 2010, Revision 0	Tetra Tech	NA	Y (project-specific)	Contained in Appendix A
SOP-14	Calibration and Care of Water Quality Meters, December 2010, Revision 0	Tetra Tech	Multi-parameter water quality meter, such as a Horiba U-22	Y (project-specific)	Contained in Appendix A

SAP Worksheet No. 22 -- Field Equipment Calibration, Maintenance, Testing, and Inspection Table

(UFP-QAPP Manual Section 3.1.2.4)

Field Equipment	Activity[1]	Frequency	Acceptance Criteria	Corrective Action (CA)	Responsible Person	SOP Reference[2]	Comments
Water Quality Meter (YSI 600 Series or Equivalent)	Visual Inspection Calibration/ Verification	Daily Beginning and end of day	Manufacturer's guidance	Operator correction or replacement	Tetra Tech FOL or designee	SOP-09, SOP-12, SOP-14, Manufacturer's Guidance Manual	None.
Turbidity Meter (LaMotte 2020 or equivalent)	Visual Inspection Calibration/ Verification	Daily Beginning and end of day	Manufacturer's guidance; calibrations must bracket expected values; Initial Calibration Verification (ICV) must be <5 NTU.	Operator correction or replacement	Tetra Tech FOL or designee	SOP-12, Manufacturer's Guidance Manual	To be used to determine the need to collect Dissolved Metals samples (if ≥5 NTU).
Electric Water Level Indicator and Oil/Water Interface Probe	Visual Inspection Field checks as per manufacturer	Daily Once upon receiving from vendor	0.01 foot accuracy	Operator correction or replacement	Tetra Tech FOL or designee	SOP-11, SOP-12, Manufacturer's Guidance Manual	None.

Notes:

1 Activities may include: calibration, verification, testing, maintenance, and/or inspection.
2 Specify the appropriate reference letter or number from the Project Sampling SOP References table (Worksheet No.21).

SAP Worksheet No. 23 – Analytical SOP References Table

(UFP-QAPP Manual Section 3.2.1)

Lab SOP Number	Title, Revision Date, and/or Number	Definitive or Screening Data	Matrix and Analytical Group	Instrument	Organization Performing Analysis	Modified for Project Work? (Y/N)
Empirical SOP-100	Metals Digestion/ Preparation, Methods 3005A/ USEPA CLP ILMO 4.1 Aqueous, 3010A, 3030C, 3050B, 200.7, Standard Methods 3030C (Revision 21, 09/21/10)	Definitive	Groundwater and aqueous QC samples/ Metals Digestion	NA/ Preparation	Empirical	N
Empirical SOP-103	Mercury Analysis in Water by Manual Cold Vapor Technique, Methods USEPA SW846 7470A and 245.1, CLP-M 4.1 (Revision 18, 04/11/10)	Definitive	Groundwater and aqueous QC samples/ Mercury	Flow Injection Mercury Analyzer	Empirical	N
Empirical SOP-105	Metals by Inductively Coupled Plasma-Atomic Emission Spectroscopy (ICP-AES) Technique, SW-846 Methods 6010B, 6010C, USEPA Method 200.7, Standard Methods 19th Edition 2340B, USEPA CLP ILMO 4.1 (Revision 16, 04/11/10)	Definitive	Groundwater and aqueous QC samples/ Metals	ICP-AES	Empirical	N
Empirical SOP-201	Gas Chromatography Mass Spectrometry (GC/MS) Semivolatiles and Low-Concentration PAHs using USEPA Method 625 and SW846 Method 8270C and 8270D, Including Appendix IX Compounds (Revision 20, 04/26/10)	Definitive	Groundwater and aqueous QC samples/ SVOCs (including Low Level PAHs)	GC/MS	Empirical	N
Empirical SOP-202	GC/MS Volatiles using USEPA Method 624 and SW846 Method 8260B, Including Appendix IX Compounds (Revision 23, 09/09/10)	Definitive	Groundwater and aqueous QC samples/ VOCs	GC/MS	Empirical	N
Empirical SOP-300	GC/MS- Semivolatile BNA-Aqueous Matrix Extraction using SW-846 Method 3510C for 8270/625 Analysis (Revision 18, 04/26/10)	Definitive	Groundwater and aqueous QC samples/ SVOCs (including Low Level PAHs) Extraction	NA/ Extraction	Empirical	N

Copies of laboratory SOPs listed are included in Appendix B.

SAP Worksheet No. 24 – Analytical Instrument Calibration Table

(UFP-QAPP Manual Section 3.2.2)

Instrument	Calibration Procedure	Frequency of Calibration	Acceptance Criteria	CA	Person Responsible for CA	SOP Reference
GC/MS VOCs	Bromofluoro-benzene (BFB) Tune	Prior to each Initial Calibration (ICAL) and at the beginning of each 12-hour period.	Must meet the ion abundance criteria required by the method (SW-846 8260B; Section 7.3.1; Table 4).	Retune and/or clean or replace source. No samples may be accepted without a valid tune.	Analyst/ Supervisor	Empirical SOP-202
	ICAL – a minimum of a 5-point calibration is prepared for all target analytes	Upon instrument receipt, for major instrument changes, or when continuing calibration verification (CCV) does not meet criteria.	The average response factor (RF) for System Performance Check Compound (SPCCs) must be ≥ 0.30 for chlorobenzene and 1,1,2,2-tetrachloroethane, ≥ 0.1 for chloromethane, bromoform, and 1,1-dichloroethane. The percent relative standard deviation (%RSD) for RFs for calibration check compounds (CCCs) must be ≤ 30%; and %RSD for each target analyte must be ≤ 15%, or the linear regression correlation coefficient (r) must be ≥ 0.995; or the coefficient of determination (r^2) must be ≥ 0.99 (6 points are required for second order).	Correct problem then repeat ICAL. No samples may be run until ICAL has passed.	Analyst/ Supervisor	
	Retention Time (RT) Window Position Establishment	Once per ICAL for each analyte and surrogate.	Position shall be set using the midpoint standard of the ICAL curve when ICAL is performed. On days when ICAL is not performed, the initial CCV is used.	NA.	Analyst / Supervisor	
	Evaluation of Relative Retention Times (RRTs)	With each sample.	RRT of each target analyte must be within ± 0.06 RRT units.	Correct problem, then rerun ICAL.	Analyst / Supervisor	
	Initial Calibration Verification (ICV) – Second Source	Once after each ICAL, prior to beginning a sample run.	The percent recovery (%R) for all target analytes must be within 80-120% of true values.	Correct problem and verify ICV. If that fails, correct problem and repeat ICAL. No samples may be run until ICV has been verified.	Analyst/ Supervisor	

Instrument	Calibration Procedure	Frequency of Calibration	Acceptance Criteria	CA	Person Responsible for CA	SOP Reference
GC/MS VOCs (continued)	CCV	Perform one per 12-hour analysis period after tune and before sample analysis.	The minimum RF for SPCCs must be ≥ 0.30 for chlorobenzene and 1,1,2,2-tetrachloroethane, ≥ 0.1 for chloromethane, bromoform, and 1,1-dichloroethane. The percent difference or percent drift (%D) for all target analytes and surrogates must be ≤ 20%.	Correct problem and rerun CCV. If that fails, repeat ICAL and reanalyze all samples analyzed since the last successful CCV.	Analyst/ Supervisor	Empirical SOP-202
GC/MS SVOCs and Low Level PAHs	Tune Verification – decafluoro-triphenyl-phosphine (DFTPP)	Prior to each ICAL and at the beginning of each 12-hour analytical sequence.	Must meet the ion abundance criteria required by the method (SW-846 8270D; Section 7.3.1; Table 3), dichlorodiphenyltrichloroethane (DDT) degradation ≤20% (exclusion for LOW PAH analysis).	Retune and/or clean or replace source. No samples may be accepted without a valid tune.	Analyst/ Supervisor	Empirical SOP-201
	Breakdown Check (DDT only)	At the beginning of each 12-hour analytical sequence.	The degradation must be ≤ 20% for DDT to verify inertness of the injection port.	Correct the problem then repeat breakdown check. No samples shall be run until degradation is ≤20% for DDT.	Analyst/ Supervisor	
	ICAL – A minimum of a 5-point calibration is prepared for all target analytes	Upon instrument receipt, instrument change (new column, source cleaning, etc.), when CCV is out of criteria.	The average RF for SPCCs must be ≥ 0.050. The %RSD for RFs for CCCs must be ≤ 30%; and %RSD for each target analyte must be ≤ 15%, or r must be ≥ 0.995, or r^2 must be ≥ 0.99 (minimum of 6 points required for second order).	Correct problem then repeat ICAL. No samples may be run until ICAL has passed.	Analyst/ Supervisor	
	ICV – Second Source	Perform after each ICAL, prior to beginning a sample run.	The %R of all target analytes must be within 80-120% of the true value. SPCC RFs must be ≥ 0.050; CCCs must be ≤ 20%D.	Correct problem and verify ICV. If that fails, correct problem and repeat ICAL. No samples may be run until ICV has been verified.	Analyst/ Supervisor	
	RT Window Position Establishment	Once per ICAL for each analyte and surrogate.	Position shall be set using the midpoint standard of the ICAL curve when ICAL is performed. On days when ICAL is not performed, the initial CCV is used.	NA.	Analyst / Supervisor	
	Evaluation of RTs	With each sample.	RT of each target analyte must be within ± 0.06 RRT units.	Correct problem, then rerun ICAL.	Analyst / Supervisor	

Instrument	Calibration Procedure	Frequency of Calibration	Acceptance Criteria	CA	Person Responsible for CA	SOP Reference
GC/MS SVOCs and Low Level PAHs (continued)	CCV	Analyze a standard at the beginning of each 12-hour shift after tune and before sample analysis.	SPCC RFs must be ≥ 0.050; All target analytes and surrogates must be ≤ 20%D.	If %D is high and sample result is non detect (ND), qualify/narrate with project approval. If %D is low or project approval not received, reanalyze all samples since the last successful CCV.	Analyst/ Supervisor	Empirical SOP-201
ICP-AES Metals	ICAL - a 1-point calibration per manufacturer's guidelines is prepared for all target analytes	At the beginning of each day, or if the QC is out of criteria, prior to sample analysis.	None; only one high standard and a calibration blank must be analyzed. If more than one calibration standard is used, r must be ≥ 0.995.	Recalibrate and/or perform the necessary equipment maintenance. Check the calibration standards. Reanalyze the affected data.	Analyst/ Supervisor	Empirical SOP-105
	ICV – Second Source	Following ICAL, prior to the analysis of samples.	The %R of all target analytes must be within 90-110% of true value.	Investigate reasons for failure, reanalyze once. If still unacceptable, correct problem and repeat ICAL.	Analyst/ Supervisor	
	CCV	At the beginning and end of the sequence and after every 10 samples.	The %R of all target analytes must be within 90-110% of true value.	Recalibrate and/or perform the necessary equipment maintenance. Check the calibration standards. Reanalyze all affected samples.	Analyst/ Supervisor	
	Initial Calibration Blank (ICB)	Before beginning a sample sequence.	No target analytes detected > LOD.	Correct the problem, then re-prepare and reanalyze.	Analyst / Supervisor	
	Continuing Calibration Blank (CCB)	After the initial CCV, after every 10 samples, and at the end of the sequence.	No target analytes detected > LOD.	Correct the problem, then re-prepare and reanalyze calibration blank and all affected samples.	Analyst / Supervisor	
	Low-Level Check Standard (if using 1-point ICAL)	Daily after 1-point ICAL and before samples.	The %R of all target analytes must be within 80-120% of true value.	Investigate and perform necessary equipment maintenance. Recalibrate and reanalyze all affected samples.	Analyst / Supervisor	

Instrument	Calibration Procedure	Frequency of Calibration	Acceptance Criteria	CA	Person Responsible for CA	SOP Reference
	Interference Check Standards (ICS – ICS A and ICS B)	At the beginning of an analytical run.	The absolute value of ICS A recoveries for non-spiked analytes must be < LOD; and ICS B recoveries must be within 80-120 %R of true value.	Terminate analysis; locate and correct problem; reanalyze ICS.	Analyst / Supervisor	
Mercury Analyzer	ICAL – A minimum of a 5-point calibration is prepared	Perform daily prior to sample analysis.	The %RSD for RFs must be ≤ 20%, or r must be ≥ 0.995.	Correct problem then repeat ICAL. No samples may be run until ICAL has passed.	Analyst/ Supervisor	Empirical SOP-103
	ICB	Before beginning a sample sequence.	No mercury detected > LOD.	Correct problem, then re-prepare and reanalyze.	Analyst / Supervisor	
	ICV - Second Source	Once after each ICAL and prior to sample analysis	The %R for mercury must be within 90-110% of the true value.	Correct problem and verify ICV. If that fails, correct problem and repeat ICAL. No samples may be run until ICV has been verified.	Analyst / Supervisor	
	CCB	After each CCV, after every 10 samples, and at the end of the sequence	No mercury detected > LOD.	Investigate source of contamination, rerun any samples not bracketed by passing blanks.	Analyst / Supervisor	
	CCV	At beginning and end of each run sequence and every 10 samples.	The %R for mercury must be within 80-120% of the true value.	Correct problem and rerun CCV. If that fails, repeat ICAL and reanalyze all samples analyzed since the last successful CCV.	Analyst / Supervisor	

SAP Worksheet No. 25 – Analytical Instrument/Equipment Maintenance, Testing, and Inspection Table

(UFP-QAPP Manual Section 3.2.3)

Instrument/ Equipment	Maintenance Activity	Testing Activity	Inspection Activity	Frequency	Acceptance Criteria	CA	Responsible Person	SOP Reference[1]
GC/MS	Check pressure and gas supply daily. Bake out trap and column, change septa as needed, cut column as needed, change trap as needed. Other maintenance specified in Equipment Maintenance SOP.	VOCs	Ion source, injector liner, column, column flow, purge lines, purge flow, trap.	Prior to ICAL and/or as necessary.	Acceptable ICAL and CCV.	Correct the problem and repeat ICAL or CCV.	Analyst/ Supervisor	Empirical SOP-202
GC/MS	Check pressure and gas supply daily. Bake out column, change septa as needed, cut column as needed. Other maintenance specified in Equipment Maintenance SOP.	SVOCs (Including Low Level PAHs)	Ion source, injector liner, column, column flow.	Prior to ICAL and/or as necessary.	Acceptable ICAL and CCV.	Correct the problem and repeat ICAL or CCV.	Analyst/ Supervisor	Empirical SOP-201
ICP-AES	Clean the torch assembly and the spray chamber when they become discolored or when degradation in data quality is observed. Clean the nebulizer, and check the argon supply. Replace the peristaltic pump tubing as needed.	Metals	Inspect the torch, nebulizer chamber, pump, and tubing	Prior to ICAL and as necessary.	Acceptable ICAL and CCV.	Correct the problem and repeat ICAL or CCV.	Analyst/ Supervisor	Empirical SOP-105
Mercury Analyzer	Replace peristaltic pump tubing, replace mercury lamp, replace drying tube, clean optical cell and/or clean liquid/gas separator as needed. Other maintenance specified in Equipment Maintenance SOP.	Mercury	Inspect the tubing, filter, and the optical cell	Prior to ICAL and as necessary.	Acceptable ICAL and CCV.	Correct the problem and repeat ICAL or CCV.	Analyst/ Supervisor	Empirical SOP-103

Notes:

1 Specify the appropriate reference letter or number from the Analytical SOP References table (Worksheet No.23).

SAP Worksheet No. 26 -- Sample Handling System

(UFP-QAPP Manual Appendix A)

SAMPLE COLLECTION, PACKAGING, AND SHIPMENT
Sample Collection (Personnel/Organization): George Ten Eyck / Tetra Tech
Sample Packaging (Personnel/Organization): George Ten Eyck / Tetra Tech
Coordination of Shipment (Personnel/Organization): George Ten Eyck / Tetra Tech
Type of Shipment/Carrier: Overnight courier service (Federal Express)
SAMPLE RECEIPT AND ANALYSIS
Sample Receipt (Personnel/Organization): Sample Custodians/ Empirical
Sample Custody and Storage (Personnel/Organization): Sample Custodians/ Empirical
Sample Preparation (Personnel/Organization): Extraction Laboratory, Metals Preparation Laboratory / Empirical
Sample Determinative Analysis (Personnel/Organization): GC/MS Laboratory, Metals Laboratory/ Empirical
SAMPLE ARCHIVING
Field Sample Storage (Number of days from sample collection): 60 days from receipt
Sample Extract/Digestate Storage (number of days from extraction/digestion): 3 months from sample digestion/extraction
Biological Sample Storage (Number of days from sample collection): NA
SAMPLE DISPOSAL
Personnel/Organization: Sample Custodians/ Empirical

SAP Worksheet No. 27 – Sample Custody Requirements Table

(UFP-QAPP Manual Section 3.3.3)

Field Sample Custody Procedures

The laboratories will provide pre-preserved sample containers for sample collection. Following sample collection into the appropriate bottleware, all samples will be immediately placed on ice in a cooler. Glass sample containers will be enclosed in bubble-wrap in order to protect the bottleware during shipment. The cooler will be secured using strapping tape along with a signed custody seal. Sample coolers will be delivered to a local courier location for priority overnight delivery to the selected laboratory for analysis. Samples will be preserved as appropriate based on the analytical method. Samples will be maintained at <6 °C until delivery to the laboratory. Proper custody procedures will be followed throughout sample collection and handling.

Chain-of-custody protocols will be used throughout sample handling to establish the evidentiary integrity of samples. These protocols will be used to demonstrate that the samples were handled and transferred in a manner that would eliminate possible tampering. Samples for the laboratory will be packaged and shipped in accordance with Tetra Tech SOP-05 (Appendix A).

Chain-of-Custody Procedures

After collection, each sample will be maintained in the sampler's custody until formally transferred to another party (e.g., Federal Express). For all samples collected, chain-of-custody forms will document the date and time of sample collection, the sampler's name, and the names of all others who subsequently held custody of the sample. Specifications for chemical analyses will also be documented on the chain-of-custody form. Tetra Tech SOP-04 provides further details on the chain-of-custody procedure (Appendix A). Chain-of-custody requirements are also documented with instructions contained in each shipment from the laboratory.

Laboratory Sample Custody Procedures

Chain-of-custody requirements are also documented with instructions contained in each shipment from Empirical (SOP-QS-10, Sample Receiving and Sample Storage), which is provided in Appendix B.

Sample Designation System

Each sample collected for analysis will be assigned a unique sample tracking number that will consist of a multi-segment alphanumeric code that identifies the site, sample location, sample type (sample medium or QC sample designation), sample location, and sample depth. SOP-03 addresses sample identification nomenclature (Appendix A).

SAP Worksheet No. 28 -- Laboratory QC Samples Table

(UFP-QAPP Manual Section 3.4)

Matrix	**Groundwater and Aqueous QC Samples**
Analytical Group	**VOCs**
Analytical Method / SOP Reference	**SW-846 8260B Empirical SOP-202**

QC Sample	Frequency / Number	Method / SOP QC Acceptance Limits	CA	Person(s) Responsible for CA	DQI	Measurement Performance Criteria
Method Blank	One per preparatory batch of 20 or fewer samples.	All target analytes must be ≤ ½ LOQ, except common lab contaminants, which must be < LOQ.	Investigate source of contamination and rerun method blank prior to analysis of samples, if possible. Evaluate the samples and associated QC: if blank results are above LOQ, then report sample results that are <LOQ or >10X the blank concentration. Re-prepare and reanalyze blank and those samples that were >LOQ and <10X the blank.	Analyst, Supervisor, Data Validator	Bias/ Contamination	Same as QC Acceptance Limits
Laboratory Control Sample (LCS)/ Laboratory Control Sample Duplicate (LCSD) (not required)	One per preparatory batch of 20 or fewer samples.	%Rs must meet the DoD Quality Systems Manual (QSM) Version 4.1 limits as per Appendix G of the DoD QSM. RPD must be ≤ 30% (for LCS/LCSD, if LCSD is performed).	Evaluate and reanalyze if possible. If an MS/MSD was performed in the same 12 hour clock and acceptable, then narrate. If the LCS %Rs are high, but the sample results are <LOQ, then narrate. Otherwise, re-prepare and reanalyze the LCS and associated samples.	Analyst, Supervisor, Data Validator	Accuracy/ Bias Precision also, if LCSD is analyzed	Same as QC Acceptance Limits
MS/MSD	One per preparatory batch of 20 or fewer samples of similar matrix.	%Rs must meet the DoD QSM Version 4.1 limits as per Appendix G of the DoD QSM. The RPD between MS and MSD should be ≤ 30%.	CA will not be taken for samples when recoveries are outside limits and surrogate and LCS criteria are met unless RPDs indicate obvious extraction/ analysis difficulties, then re-prepare and reanalyze MS/MSD.	Analyst, Supervisor, Data Validator	Accuracy/ Bias/ Precision	Same as QC Acceptance Limits

Matrix	**Groundwater and Aqueous QC Samples**
Analytical Group	**VOCs**
Analytical Method / SOP Reference	**SW-846 8260B Empirical SOP-202**

QC Sample	Frequency / Number	Method / SOP QC Acceptance Limits	CA	Person(s) Responsible for CA	Data Quality Indicator (DQI)	Measurement Performance Criteria
Internal Standards (IS)	Every field sample, standard, and QC sample - three per sample- Fluorobenzene Chlorobenzene-d_5 1,4-dichlorobezene-d_4	RTs must be within ± 30 seconds and the response areas must be within -50% to +100% of the ICAL midpoint standard for each IS.	Inspect mass spectrometer and gas chromatograph for malfunctions; mandatory reanalysis of samples analyzed while system was malfunctioning.	Analyst, Supervisor, Data Validator	Accuracy	Same as QC Acceptance Limits
Surrogates	All field and QC samples - four per sample- Dibromofluoromethane 1,2-dichloroethane-d_4 Toluene-d_8 BFB	%Rs must meet the DoD QSM Version 4.1 limits as per Appendix G of the DoD QSM.	If sample volume is available, then re-prepare and reanalyze sample for confirmation of matrix interference when appropriate.	Analyst, Supervisor, Data Validator	Accuracy/ Bias	Same as QC Acceptance Limits
Results between DL and LOQ	NA.	Apply “J” qualifier to results detected between DL and LOQ.	NA.	Analyst, Supervisor, Data Validator	Accuracy	Same as QC Acceptance Limits

Matrix	**Groundwater and Aqueous QC Samples**
Analytical Group	**SVOCs and Low Level PAHs**
Analytical Method / SOP Reference	**SW-846 8270C, 8270C-Low Empirical SOP-201**

QC Sample	Frequency / Number	Method / SOP QC Acceptance Limits	CA	Person(s) Responsible for CA	Data Quality Indicator (DQI)	Measurement Performance Criteria
Method Blank	One per preparatory batch of 20 or fewer samples of similar matrix.	All target analytes must be ≤ ½ LOQ, except common lab contaminants, which must be < LOQ.	Investigate source of contamination. Rerun method blank prior to analysis of samples if possible. Evaluate the samples and associated QC: if blank results are above LOQ, report sample results that are < LOQ or > 10X the blank concentration. Reanalyze blank and samples >LOQ and < 10X the blank.	Analyst, Supervisor, Data Validator	Bias/ Contamination	Same as QC Acceptance Limits
LCS	One per preparatory batch of 20 or fewer samples of similar matrix.	%Rs must meet the DoD QSM Version 4.1 limits as per Appendix G of the DoD QSM (except low level PAHs that are provided in Appendix B).	Evaluate and reanalyze if possible. If an MS/MSD was performed in the same 12-hour clock and is acceptable, then narrate. If the LCS recoveries are high, but the sample results are <LOQ, then narrate. Otherwise, re-prepare and reanalyze the LCS and associated samples.	Analyst, Supervisor, Data Validator	Accuracy/ Bias	Same as QC Acceptance Limits
MS/MSD	One per preparatory batch of 20 or fewer samples of similar matrix.	%Rs must meet the DoD QSM Version 4.1 limits as per Appendix G of the DoD QSM (except low level PAHs that are provided in Appendix B). The RPD between MS and MSD should be ≤ 30%.	CA will not be taken for samples when recoveries are outside limits and surrogate and LCS criteria are met, unless RPDs indicate obvious extraction/ analysis difficulties, then re-prepare and reanalyze MS/MSD.	Analyst, Supervisor, Data Validator	Accuracy/ Bias/ Precision	Same as QC Acceptance Limits

Matrix	**Groundwater and Aqueous QC Samples**
Analytical Group	**SVOCs and Low Level PAHs**
Analytical Method / SOP Reference	**SW-846 8270C, 8270C-Low Empirical SOP-201**

QC Sample	Frequency / Number	Method / SOP QC Acceptance Limits	CA	Person(s) Responsible for CA	Data Quality Indicator (DQI)	Measurement Performance Criteria
IS	Every field sample, standard, and QC sample - six per sample 1,4-Dichlorobenzene-d_4 Naphthalene-d_8 Acenaphthene-d_{10} Phenanthrene-d_{10} Chrysene-d_{12} Perylene-d_{12}	RTs must be within ± 30 seconds and the response areas must be within -50% to +100% of the ICAL midpoint standard for each IS.	Re-analyze affected samples.	Analyst, Supervisor, Data Validator	Accuracy	Same as QC Acceptance Limits
Surrogates	All field and QC samples - six per sample 2-Fluorophenol Phenol-d_6 Nitrobenzene-d_5 2-Fluorobiphenyl 2,4,6-Tribromophenol Terphenyl-d_{14}	%Rs must meet the DoD QSM Version 4.1 limits as per Appendix G of the DoD QSM (except low level PAHs that are provided in Appendix B).	(1) Check chromatogram for interference; if found, then flag data. (2) If not found, then check instrument performance; if problem is found, then correct and reanalyze sample. (3) If still out, then re-extract and reanalyze sample. (4) If reanalysis is out, then flag data.	Analyst, Supervisor, Data Validator	Accuracy/ Bias	Same as QC Acceptance Limits
Results between DL and LOQ	NA.	Apply “J” qualifier to results detected between DL and LOQ.	NA.	Analyst, Supervisor, Data Validator	Accuracy	Same as QC Acceptance Limits

Matrix	**Groundwater and Aqueous QC Samples**
Analytical Group	**Metals, (Including Mercury), Total and Dissolved**
Analytical Method / SOP Reference	**SW-846 6010C, 7470A, Empirical SOP-103, 105**

QC Sample	Frequency / Number	Method / SOP QC Acceptance Limits	CA	Person(s) Responsible for CA	Data Quality Indicator (DQI)	Measurement Performance Criteria
Method Blank	One per preparatory batch of 20 or fewer samples of similar matrix.	All target analytes must be ≤ ½ LOQ.	If the blank value > LOQ, then report sample results. If the blank value < LOQ or > 10x the blank value, then redigest. If blank value is less than negative LOQ, then report sample results. If > 10x the absolute value of the blank result, then redigest and reanalyze.	Analyst, Supervisor, Data Validator	Bias/ Contamination	Same as QC Acceptance Limits
LCS	One per preparatory batch of 20 or fewer samples of similar matrix.	%R must be within 80-120% of true value.	Evaluate and reanalyze, if possible. If the LCS recoveries are high, but the sample results are < LOQ, then narrate. Otherwise, re-digest and reanalyze all associated samples for failed target analyte(s).	Analyst, Supervisor, Data Validator	Accuracy/ Bias	Same as QC Acceptance Limits
MS	One per preparatory batch of 20 or fewer samples of similar matrix.	%R should be within 80-120% of true value (if sample is < 4x spike added).	Flag results for affected analytes for all associated samples with "N".	Analyst, Supervisor, Data Validator	Accuracy/ Bias	Same as QC Acceptance Limits
Sample Duplicate	One per preparatory batch of 20 or fewer samples of similar matrix.	The RPD should be ≤ 20% for duplicate samples for both water and soils.	Narrate any results that are outside control limits.	Analyst, Supervisor, and Data Validator	Precision	Same as QC Acceptance Limits
Serial Dilution (ICP Only)	One per preparatory batch with sample concentration(s) >50x LOD.	The 5-fold dilution result must agree within ±10%D of the original sample result if result is >50x LOD.	Perform post spike addition.	Analyst, Supervisor, Data Validator	Accuracy/ Bias	Same as QC Acceptance Limits

Matrix	**Groundwater and Aqueous QC Samples**
Analytical Group	**Metals, (Including Mercury), Total and Dissolved**
Analytical Method / SOP Reference	**SW-846 6010C, 7470A, Empirical SOP-103, 105**

QC Sample	Frequency / Number	Method / SOP QC Acceptance Limits	CA	Person(s) Responsible for CA	Data Quality Indicator (DQI)	Measurement Performance Criteria
Post Spike (ICP Only)	One is performed when serial dilution fails or target analyte concentration(s) in all samples are < 50x LOD.	The %R must be within 75-125% of expected value to verify the absence of an interference. Spike addition should produce a concentration of 10-100x LOQ.	Flag results for affected analytes for all associated samples with “J”.	Analyst, Supervisor, Data Validator	Accuracy/ Bias	Same as QC Acceptance Limits
Results between DL and LOQ	NA.	Apply “J” qualifier to results between DL and LOQ.	NA.	Analyst, Supervisor, Data Validator	Accuracy	Same as QC Acceptance Limits

SAP Worksheet No. 29 -- Project Documents and Records Table

(UFP-QAPP Manual Section 3.5.1)

Document	Where Maintained
Field Documents Field Logbook (and sampling notes) Field Sample Forms (e.g. boring logs, sample log sheets, drilling logs, etc.) Chain-of-Custody Records Sample Shipment Air Bills Sampling Instrument Calibration Logs Photographs FTMR Forms This SAP Field Sampling SOPs Health and Safety Plan	Field documents will be maintained in the project file located in the Tetra Tech Cincinnati, Ohio office.
Laboratory Documents Sample Receipt, Custody, and Tracking Record Equipment Calibration Logs Analysis Run Logs Corrective Action Forms Reported Results for Standards, QC Checks, and QC Samples Raw Data Data Completeness Checklist	Laboratory documents will be included in the hardcopy and Portable Document Format (PDF) deliverables from the laboratory. Laboratory data deliverables will be maintained in the Tetra Tech Cincinnati, Ohio project file and in long-term data package storage at a third-party professional document storage firm. Electronic data results will be maintained in a database on a password protected Structured Query Language (SQL) server.
Assessment Findings All versions of the SAP All letter and e-mail correspondence with regulatory agencies, including approvals and comments Data Validation Memoranda (includes tabulated data summary forms)	All assessment documents will be maintained in the Tetra Tech Cincinnati, Ohio project file.
Reports SWMU 26 RFI Report.	All versions of the RFI Report, and all support documents (e.g., Data Validation Reports) will be stored in hardcopy in the Tetra Tech Cincinnati, Ohio project file and electronically in the server library.

SAP Worksheet No. 30 -- Analytical Services Table

(UFP-QAPP Manual Section 3.5.2.3)

Matrix	Analytical Group	Sample Locations/ Identification Numbers	Analytical Method	Data Package Turnaround Time	Laboratory / Organization (name and address, contact person and telephone number)	Backup Laboratory/ Organization (name and address, contact person, and telephone number)
Groundwater	VOCs	See Worksheet No.18	SW-846 8260B	21 calendar days	Kim Kostzer kkostzer@empirlabs.com Empirical Laboratories, LLC 621 Mainstream Drive, Suite 270 Nashville, TN 37228 615-345-1115	NA
	SVOCs (Including Low Level PAHs)		SW-846 8270C and 8270C-Low			
	Metals (Including Mercury), Total and Dissolved		SW-846 6010C/ 7470A			

SAP Worksheet No. 31 -- Planned Project Assessments Table

(UFP-QAPP Manual Section 4.1.1)

Assessment Type	**Frequency**	**Internal or External**	**Organization Performing Assessment**	**Person(s) Responsible for Performing Assessment** (title and organizational affiliation)	**Person(s) Responsible for Responding to Assessment Findings** (title and organizational affiliation)	**Person(s) Responsible for Identifying and Implementing CA** (title and organizational affiliation)	**Person(s) Responsible for Monitoring Effectiveness of CA** (title and organizational affiliation)
Laboratory System Audit[1]	Every two years	External	DoD ELAP Accrediting Body	DoD ELAP Accrediting Body Auditor	Laboratory QAM or Laboratory Manager, Empirical	Laboratory QAM or Laboratory Manager, Empirical	Laboratory QAM or Laboratory Manager, Empirical

1 Empirical is a DoD ELAP accredited by a recognized Accrediting Body. The DoD ELAP accreditation letter is included in Appendix B.

SAP Worksheet No. 32 -- Assessment Findings and Corrective Action Responses Table

(UFP-QAPP Manual Section 4.1.2)

Assessment Type	**Nature of Deficiencies Documentation**	**Individual(s) Notified of Findings** (name, title, organization)	**Timeframe of Notification**	**Nature of Corrective Action Response Documentation**	**Individual(s) Receiving Corrective Action Response** (name, title, organization)	**Timeframe for Response**
Laboratory System Audit	Written audit report	Marcia McGinnity, Laboratory QAM, Empirical	Specified by DoD ELAP Accrediting Body	Letter	DoD ELAP Accrediting Body	Specified by DoD ELAP Accrediting Body

SAP Worksheet No. 33 -- QA Management Reports Table

(UFP QAPP Manual Section 4.2)

Type of Report	Frequency (daily, weekly monthly, quarterly, annually, etc.)	Projected Delivery Date(s)	Person(s) Responsible for Report Preparation (title and organizational affiliation)	Report Recipient(s) (title and organizational affiliation)
Data Validation Report	Per Sample Delivery Group (SDG)	Within 3 weeks after receiving the data from the laboratory	Project Chemist or Data Validator, Tetra Tech	PM and project file, Tetra Tech
Major Analysis Problem Identification (Internal Tetra Tech Memorandum)	When persistent analysis problems are detected by Tetra Tech that may impact data usability	Immediately upon detection of problem (on the same day)	QAM, Tetra Tech	PM, QAM, Program Manager, and project file, Tetra Tech
Project Monthly Progress Report	Monthly for duration of the project	Monthly	PM, Tetra Tech	PM, QAM, Program Manager, and project file, Tetra Tech
Laboratory QA Report	When significant plan deviations result from unanticipated circumstances	Immediately upon detection of problem (on the same day)	Laboratory PM, Empirical	PM and project file, Tetra Tech

SAP Worksheet No. 34 -- Verification (Step I) Process Table

(UFP-QAPP Manual Section 5.2.1)

Verification Input	Description	Internal/ External	Responsible for Verification (name, organization)
Chain-of-Custody Forms	The Tetra Tech FOL or designee will review and sign the chain-of-custody form to verify that the samples listed are included in the shipment to the laboratory and the sample information is accurate. The forms will be signed by the sampler and a copy will be retained for the project file, the Tetra Tech PM, and the Tetra Tech Data Validators.	Internal	Sampler and FOL, Tetra Tech
	The Empirical Laboratory Sample Custodian will review the sample shipment for completeness, integrity, and sign accepting the shipment. The Tetra Tech Data Validators will check that the chain-of-custody form was signed and dated by the Tetra Tech FOL or designee relinquishing the samples and also by the Laboratory Sample Custodian receiving the samples for analyses.	Internal/ External	1 - Laboratory Sample Custodian, Empirical 2 - Data Validators, Tetra Tech
SAP Sample Tables/ Chain-of-Custody Forms	Verify that all proposed samples listed in the SAP tables have been collected.	Internal	FOL or designee, Tetra Tech
Sample Log Sheets	Verify that information recorded in the log sheets is accurate and complete.	Internal	FOL or designee, Tetra Tech
SAP/ Field Logs/ Analytical Data Packages	Ensure that all sampling SOPs were followed. Verify that deviations have been documented and MPCs have been achieved. Particular attention should be given to verify that samples were correctly identified, that sampling location coordinates are accurate, and that documentation establishes an unbroken trail of documented chain-of-custody from sample collection to report generation. Verify that the correct sampling and analytical methods/SOPs were applied. Verify that the sampling plan was implemented and carried out as written and that any deviations are documented.	Internal	PM or designee, Tetra Tech
SAP/ Analytical SOPs/ Analytical Data Packages	Ensure that all laboratory SOPs were followed. Verify that the correct analytical methods/SOPs were applied.	Internal	Laboratory QAM, Empirical
SAP/ Laboratory SOPs/ Raw Data/ Applicable Control Limits Tables	Establish that all method QC samples were analyzed and in control as listed in the analytical SOPs. If method QA is not in control, the Laboratory QAM will contact the Tetra Tech PM verbally or via e-mail for guidance prior to report preparation.	Internal	Laboratory QAM, Empirical
SAP/ Chain-of-Custody Forms	Check that field QC samples listed in Worksheet No.20 were collected as required.	Internal	FOL or designee, Tetra Tech

Verification Input	Description	Internal/ External	Responsible for Verification (name, organization)
EDDs/Analytical Data Packages	Each EDD will be verified against the chain-of-custody and hard copy data package for accuracy and completeness. Laboratory analytical results will be verified and compared to the electronic analytical results for accuracy. Sample results will be evaluated for laboratory contamination and will be qualified for false positives using the laboratory method/preparation blank summaries. Positive results reported between the DL and the LOQ will be qualified as estimated. Extraneous laboratory qualifiers will be removed from the validation qualifier.	External	Data Validators, Tetra Tech
Analytical Data Packages	All analytical data packages will be verified internally for completeness by the laboratory performing the work. The Laboratory QAM will sign the case narrative for each data package.	Internal	Laboratory QAM, Empirical
	Each data package will be verified for completeness by the Tetra Tech Data Validator. Missing information will be requested by the Tetra Tech Data Validator from the Laboratory PM.	External	Data Validators, Tetra Tech

Notes: Verification includes field data verification and laboratory data verification. Verification inputs as per Worksheet No.34 will be checked.

SAP Worksheet No. 35 -- Validation (Steps IIa and IIb) Process Table

(UFP-QAPP Manual Section 5.2.2) (Figure 37 UFP-QAPP Manual) (Table 9 UFP-QAPP Manual)

Step IIa / IIb	Validation Input	Description	Responsible for Validation (name, organization)
IIa	SAP/ Sample Log Sheets	Ensure that sample locations are correct and in accordance with the SAP proposed locations. Document any discrepancies in the final report.	PM, FOL, or designee, Tetra Tech
IIa	Chain-of-Custody Forms	Ensure that the custody and integrity of the samples was maintained from collection to analysis, the custody records are complete, and any deviations are recorded. Review that the samples were shipped and store at the required temperature and sample pH for chemically preserved samples meet the requirements listed in Worksheet No.19. Ensure that the analyses were performed within the holding times listed in Worksheet No.19.	Project Chemist or Data Validators, Tetra Tech
IIa/IIb	SAP/ Laboratory Data Packages/ EDDs	Ensure that the laboratory QC samples listed in Worksheet No. 28 were analyzed and that the MPCs listed in Worksheet No. 12 were met for all field samples and QC analyses. Check that specified field QC samples were collected and analyzed and that the analytical QC criteria set up for this project were met.	Project Chemist or Data Validators, Tetra Tech
		Check the field sampling precision by calculating the RPD for field duplicate samples. Check the laboratory precision by reviewing the RPD or percent difference values from laboratory duplicate analyses; MS/MSDs; and LCS/LCSD, if available.	
		Check that the laboratory recorded the temperature at sample receipt and the pH of the chemically preserved samples to ensure sample integrity from sample collection to analysis.	
		Review the chain-of-custody forms generated in the field to ensure that the required analytical samples have been collected, appropriate sample identifications have been used, and correct analytical methods have been applied. The Tetra Tech Data Validator will verify that elements of the data package required for validation are present, and if not, the laboratory will be contacted and the missing information will be requested. Validation will be performed as per Worksheet No. 36.	

Step IIa / IIb	Validation Input	Description	Responsible for Validation (name, organization)
IIb	SAP/ Laboratory Data Packages/ EDDs	Ensure that the LOQs listed in Worksheet No.15 were achieved.	Project Chemist or Data Validators, Tetra Tech
		Discuss the impact of matrix interferences or sample dilutions performed because of the high concentration of one or more other contaminants, on the other target compounds reported as non-detected.	
		Summarize deviations from methods, procedures, or contracts in the Data Validation Report. If possible determine the impact of any deviation from sampling or analytical methods and SOPs requirements and matrix interferences effect on the analytical results. Qualify data results based on method or QC deviation and explain all the data qualifications.	
		Ensure that the laboratory QC samples listed in Worksheet No. 28 were analyzed and that the MPCs listed in Worksheet No. 12 were met for all field samples and QC analyses. Check that specified field QC samples were collected and analyzed and that the analytical QC criteria set up for this project were met.	

SAP Worksheet No. 36 -- Analytical Data Validation (Steps IIa and IIb) Summary Table

(UFP-QAPP Manual Section 5.2.2.1)

Step **IIa / IIb**	Matrix	Analytical Group	Validation Criteria	Data Validator (title and organizational affiliation)
IIa and IIb	Groundwater	VOCs and SVOCs (Including Low Level PAHs)	Data validation will be performed using criteria for SW-846 Methods 8260B, 8270C, and 8270C-Low listed in Worksheets Nos.12, 15, 24, and 28 and the current DoD QSM. If not included in the aforementioned, then the logic outlined in the "USEPA CLP National Functional Guidelines for Organic Data Review" USEPA-540/R-99-008, (USEPA, October 1999) will be used to apply qualifiers to data.	Data Validation Specialist, Tetra Tech
IIa and IIb	Groundwater	Metals (Including Mercury)	Data validation will be performed using criteria for SW-846 Methods 6010C and 7470A listed in Worksheets Nos.12, 15, 24, and 28 and the current DoD QSM. If not included in and the aforementioned, then the logic outlined in the "USEPA CLP National Functional Guidelines for Inorganic Data Review", USEPA 540-R-04-004, (USEPA, October 2004) will be used to apply qualifiers to data.	Data Validation Specialist, Tetra Tech

SAP Worksheet No. 37 -- Usability Assessment

(UFP-QAPP Manual Section 5.2.3)

Data Usability Assessment

The usability of the data generated during the project directly affects whether project objectives can be achieved. The following characteristics will be evaluated at a minimum. The results of these evaluations will be included in the project report. The characteristics will be evaluated for multiple concentration levels if the evaluator determines that this is necessary. To the extent required by the type of data being reviewed, the assessors will consult with other technically competent individuals to render sound technical assessments of these DQI characteristics:

Completeness

- For each matrix that was scheduled to be sampled, the Tetra Tech FOL acting on behalf of the Project Team will prepare a table listing planned samples/analyses to collected samples/analyses. If deviations from the scheduled sample collection or analyses are identified, the Tetra Tech PM will determine whether the deviations compromise the ability to meet project objectives. If they do, the Tetra Tech PM will consult with the Navy RPM and other project team members, as necessary (determined by the Navy RPM), to develop appropriate corrective actions.

Precision

- The Tetra Tech Project Chemist acting on behalf of the Project Team will determine whether precision goals for FD and laboratory duplicates were met. This will be accomplished by comparing duplicate results to precision goals identified in Worksheets Nos.12 and 28. This will also include a comparison of field and laboratory precision with the expectation that FD results will be no less precise than laboratory duplicate results. If the goals are not met, or data have been flagged as estimated (J qualifier), limitations on the use of the data will be described in the project report.

Accuracy

- The Tetra Tech Project Chemist acting on behalf of the Project Team will determine whether the accuracy/bias goals were met for project data. This will be accomplished by comparing percent recoveries of LCS, LCSD, MS, MSD, and surrogate compounds to accuracy goals identified in Worksheet No. 28. This assessment will include an evaluation of field and laboratory contamination; instrument calibration variability; and analyte recoveries for surrogates, MS, and laboratory control samples. If the goals are not met, limitations on the use of the data will be described in the project report. Bias of the qualified results and a description of the impact of identified non-compliances on a specific data package or on the overall project data will be described in the project report.

Representativeness

- A Project Scientist identified by the Tetra Tech PM and acting on behalf of the Project Team will determine whether the data are adequately representative of intended populations, both spatially and temporally. This will be accomplished by verifying that samples were collected and processed for analysis in accordance with the SAP, by reviewing spatial and temporal data variations, and by comparing these characteristics to expectations. The usability report will describe the representativeness of the data for each matrix and analytical fraction. This will not require quantitative comparisons unless professional judgment of the Project Scientist indicates that a quantitative analysis is required.

Comparability

- The Tetra Tech Project Chemist acting on behalf of the Project Team will determine whether the data generated under this project are sufficiently comparable to historical site data generated by different methods and for samples collected using different procedures and under different site conditions. This will be accomplished by comparing overall precision and bias among data sets for each matrix and analytical fraction. This will not require quantitative comparisons unless professional judgment of the Tetra Tech Project Chemist indicates that such quantitative analysis is required.

Sensitivity

- The Tetra Tech Project Chemist acting on behalf of the Project Team will determine whether project sensitivity goals listed in Worksheet No. 15 were achieved. The overall sensitivity and quantitation limits from multiple data sets for each matrix and analysis will be compared. If sensitivity goals are not achieved, the limitations on the data will be described.

Project Assumptions and Data Outliers

- The Tetra Tech PM and designated team members will evaluate whether project assumptions are valid. This will typically be a qualitative evaluation but may be supported by quantitative evaluations. The type of evaluation depends on the assumption being tested. Quantitative assumptions include assumptions related to data distributions (e.g., Normal versus log-normal) and estimates of data variability. Potential outliers will be removed if a review of the associated indicates that the results have an assignable cause the renders them inconsistent with the rest of the data. During this evaluation, the team will consider whether outliers could be indications of unanticipated site conditions. Consideration will be given to whether outliers represent an unanticipated site condition.

Describe the evaluative procedures used to assess overall measurement error associated with the project:

After completion of the data validation, the data and data quality will be reviewed to determine whether sufficient data of acceptable quality are available for decision making. In addition to the evaluations described above, a series of inspections and statistical analyses will be performed to estimate these characteristics. The statistical evaluations will include simple summary statistics for target analytes, such as maximum concentration, minimum concentration, number of samples exhibiting non-detected results, number of samples exhibiting positive results, and the proportion of samples with detected and non-detected results. The project team members identified by the Tetra Tech PM will assess whether the data collectively support the attainment of project objectives. They will consider whether any missing or rejected data have compromised the ability to make decisions or to make the decisions with the desired level of confidence. The data will be evaluated to determine whether missing or rejected data can be compensated by other data. Although rejected data will generally not be used, there may be reason to use them in a weight of evidence argument, especially when they supplement data that have not been rejected. If rejected data are used, their use will be supported by technically defensible rationales.

For mathematical manipulations, non-detected values will be represented by a concentration equal to one-half the sample-specific reporting limit. Duplicate results (original and duplicate) will not be averaged for the purpose of representing the range of concentrations. However, the average of the original and duplicate samples will be used to represent the concentration at a particular sampled location.

Identify the personnel responsible for performing the usability assessment:

The Tetra Tech PM, Project Chemist, FOL, and Project Scientist will be responsible for conducting the listed data usability assessments. The data usability assessment will be reviewed with the Navy RPM, the Navy ERSM, and the IDEM RPM. If deficiencies affecting the attainment of project objectives are identified, the review will take place either in a face to face meeting or a teleconference depending on the extent of identified deficiencies. If no significant deficiencies are identified, the data usability assessment will simply be documented in the project report and reviewed during the normal document review cycle.

Describe the documentation that will be generated during usability assessment and how usability assessment results will be presented so that they identify trends, relationships (correlations), and anomalies:

The data will be presented in tabular format, including data qualifications such as estimation (J, UJ) or rejection (R). Written documentation will support the non-compliance estimated or rejected data results. The project report will identify and describe the data usability limitations and suggest re-sampling or other corrective actions, if necessary.

REFERENCES

IDEM (Indiana Department of Environmental Management). 2009. Risk Integrated System of Closure, Appendix 1, Default Closure Level Tables. Version 1.2. May.

Morrison Knudsen, 1997. *Interim Measures Report*. October.

Tetra Tech (Tetra Tech NUS, Inc.), 2001. Final Base-Wide Background Soil Investigation Report for Naval Surface Warfare Center Crane, Crane, Indiana. January.

USACE (United States Army Corps of Engineers), 1982. *Hydrogeologic Investigation of Waste Disposal Sites at the Naval Weapons Support Center, Crane, Indiana.* Waterways Experiment Station. April.

USDoD (United States Department of Defense), 2009. Department of Defense Quality Systems Manual for Environmental Laboratories. Version 4.1. April.

USEPA, 1999. *Contract Laboratory Program National Functional Guidelines for Organics Data Review*. EPA540/R-99/008. Office of Emergency and Remedial Response, Washington, DC. October.

USEPA. 2002. Guidance for Quality Assurance Project Plans (EPA QA/G-5). EPA/240/R-02/009. USEPA Office of Environmental Information, Washington DC. December.

USEPA, 2004. *Contract Laboratory Program National Functional Guidelines for Inorganics Data Review.* EPA 540-R-04-004. OSWER 9240.1-45. Office of Superfund Remediation and Technology Innovation (OSRTI), October.

USEPA, 2005. *Uniform Federal Policy for Quality Assurance Plans (UFP-QAPP), Evaluating, Assessing, and Documenting Environmental Data Collection and Use Programs (Final Version 1)*, EPA-505-B-04-900A. March.

USEPA, 2008. *Test Methods for Evaluating Solid Waste; Physical/Chemical Methods (SW-846), 3rd Edition, up to and Including Update IV*. Office of Solid Waste and Emergency Response, Washington, DC. February.

USEPA, 2009. National Primary Drinking Water Regulations, Maximum Contaminant Levels, EPA-816-F-09-0004. http://www.epa.gov/safewater/consumer/pdf/mcl.pdf. May.

USEPA. 2010. Regions 3, 6, and 9 Regional Screening Levels for Chemical Contaminants at Superfund Sites. RSL Table Update. http://epa-prgs.ornl.gov/chemicals/index.shtml. November.

FIGURES

10-1 Base and Site Location Map
10-2 Site Layout – 2005 Aerial Photograph
10-3 Monitoring Well Locations and Groundwater Flow Direction
10-4 Geologic Cross Section location Map
10-5 Geologic Cross Section A-A’
10-6 Geologic Cross Section B-B’
10-7 Conceptual Site Model
10-8 Human Conceptual Exposure Model Diagram
17-1 Proposed Monitoring Well Location

P:\GIS\CRANE_NSWC\MAPDOCS\MXD\SWMU26_LOCATION_MAP.MXD 09/27/10 SS

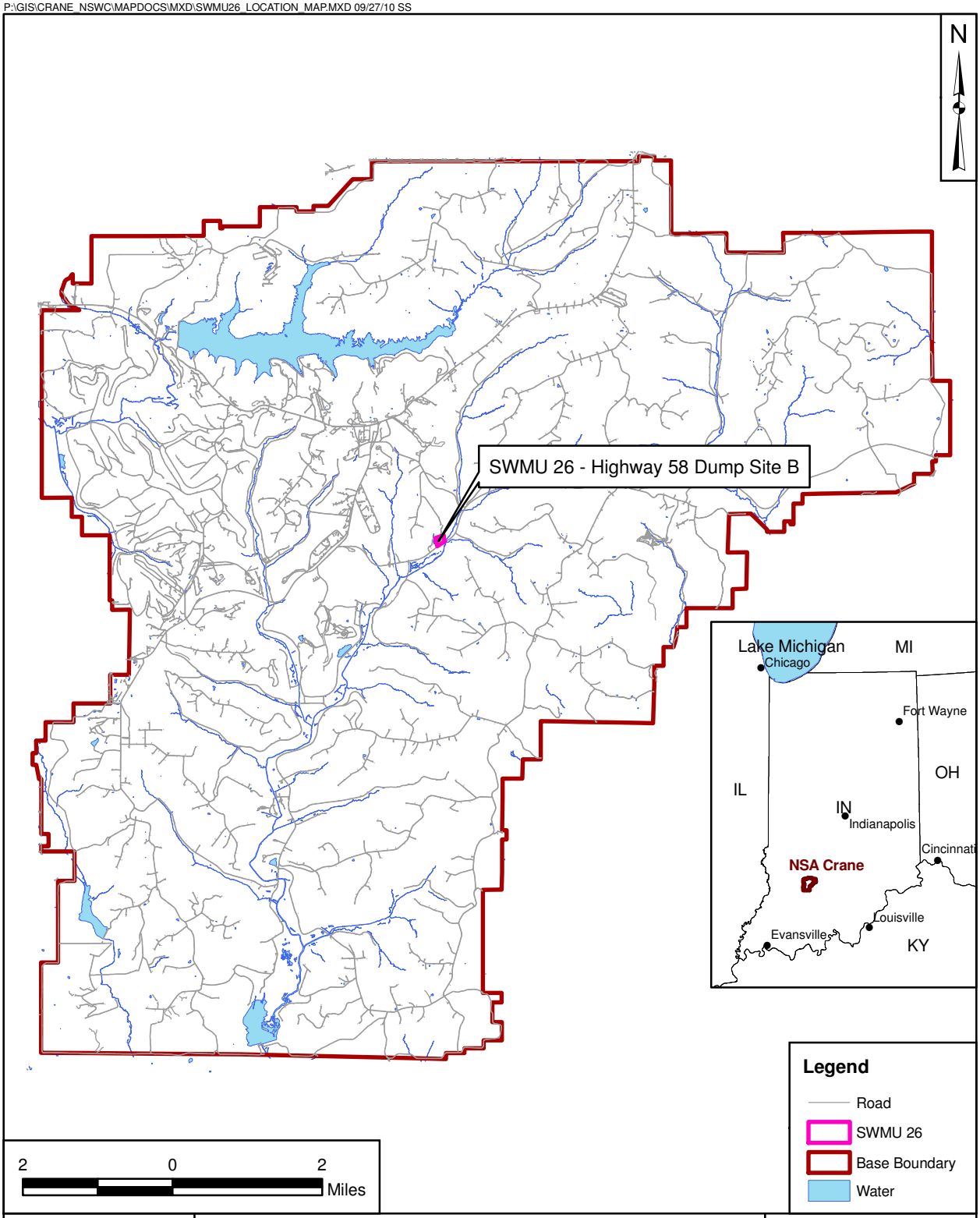

DRAWN BY S. STROZ	DATE 09/27/10	TETRA TECH	CONTRACT NUMBER CTO F27H
CHECKED BY G. TEN EYCK	DATE 10/22/10	BASE AND SITE LOCATION MAP SWMU 26 - HIGHWAY 58 DUMP SITE B NSA CRANE CRANE, INDIANA	APPROVED BY ___ DATE ___
REVISED BY	DATE		APPROVED BY ___ DATE ___
SCALE AS NOTED			FIGURE NO. FIGURE 10-1 / REV 0

P:\GIS\CRANE_NSWC\MAPDOCS\MXD\SWMW26_AERIAL.MXD 11/16/10 SS

DRAWN BY S. STROZ	DATE 09/27/10	TETRA TECH	CONTRACT NUMBER CTO F27H
CHECKED BY G. TEN EYCK	DATE 11/16/10	SITE LAYOUT - 2005 AERIAL PHOTOGRAPH SWMU 26 - HIGHWAY 58 DUMP SITE B NSA CRANE CRANE, INDIANA	APPROVED BY ___ DATE ___
REVISED BY ___	DATE ___		APPROVED BY ___ DATE ___
SCALE AS NOTED			FIGURE NO. FIGURE 10-2 REV 0

P:\GIS\CRANE_NSWC\MAPDOCS\MXD\SWMW26_TOPO.MXD 12/13/10 SS

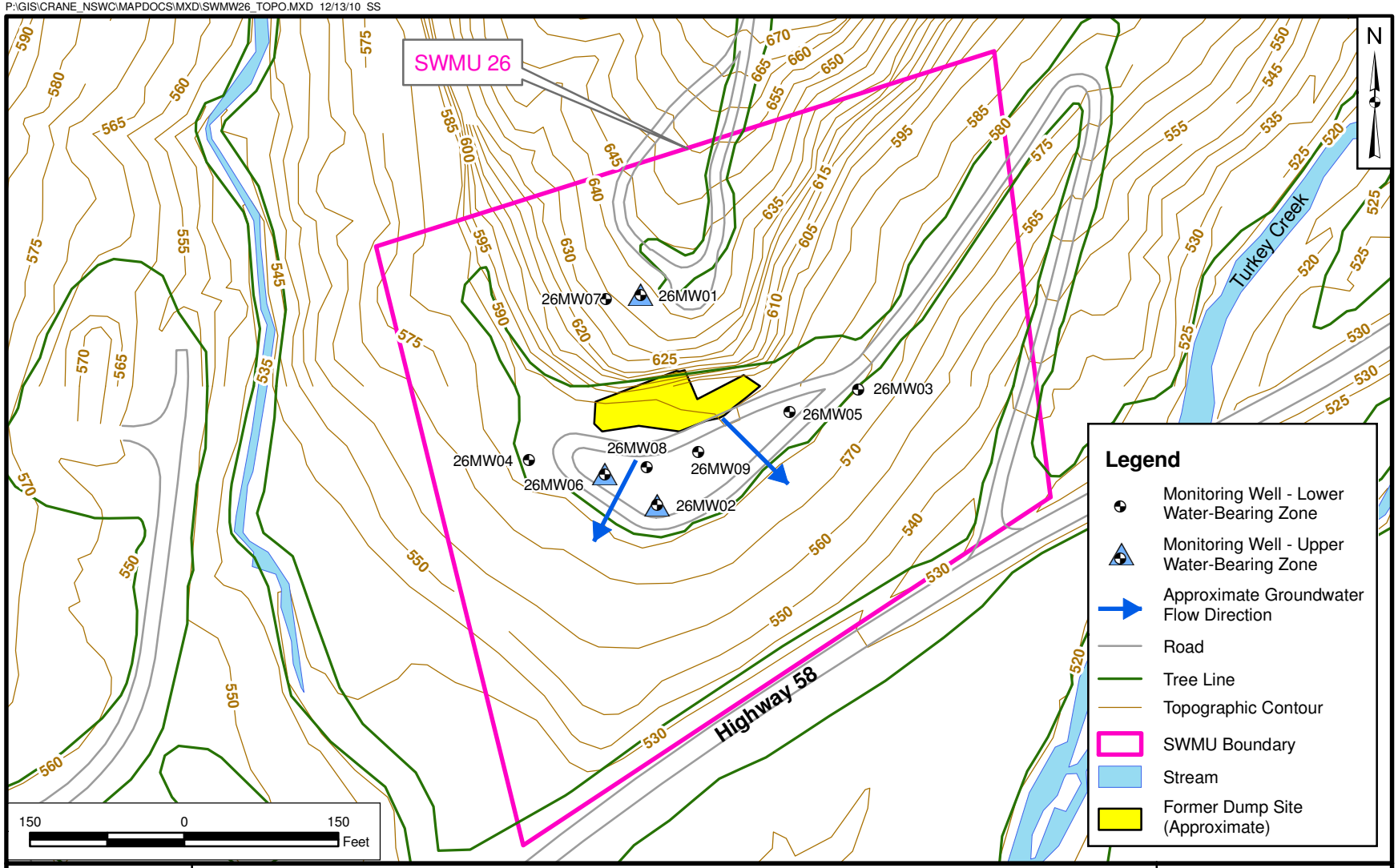

DRAWN BY S. STROZ	DATE 09/27/10	TETRA TECH	CONTRACT NUMBER CTO F27H
CHECKED BY G. TEN EYCK	DATE 12/13/10	MONITORING WELL LOCATIONS AND GROUNDWATER FLOW DIRECTION SWMU 26 - HIGHWAY 58 DUMP SITE B NSA CRANE CRANE, INDIANA	APPROVED BY ___ DATE ___
REVISED BY ___	DATE ___		APPROVED BY ___ DATE ___
SCALE AS NOTED			FIGURE NO. FIGURE 10-3 REV 0

P:\GIS\CRANE_NSWC\MAPDOCS\MXD\SWMW26_CROSS_SECT.MXD 12/13/10 SS

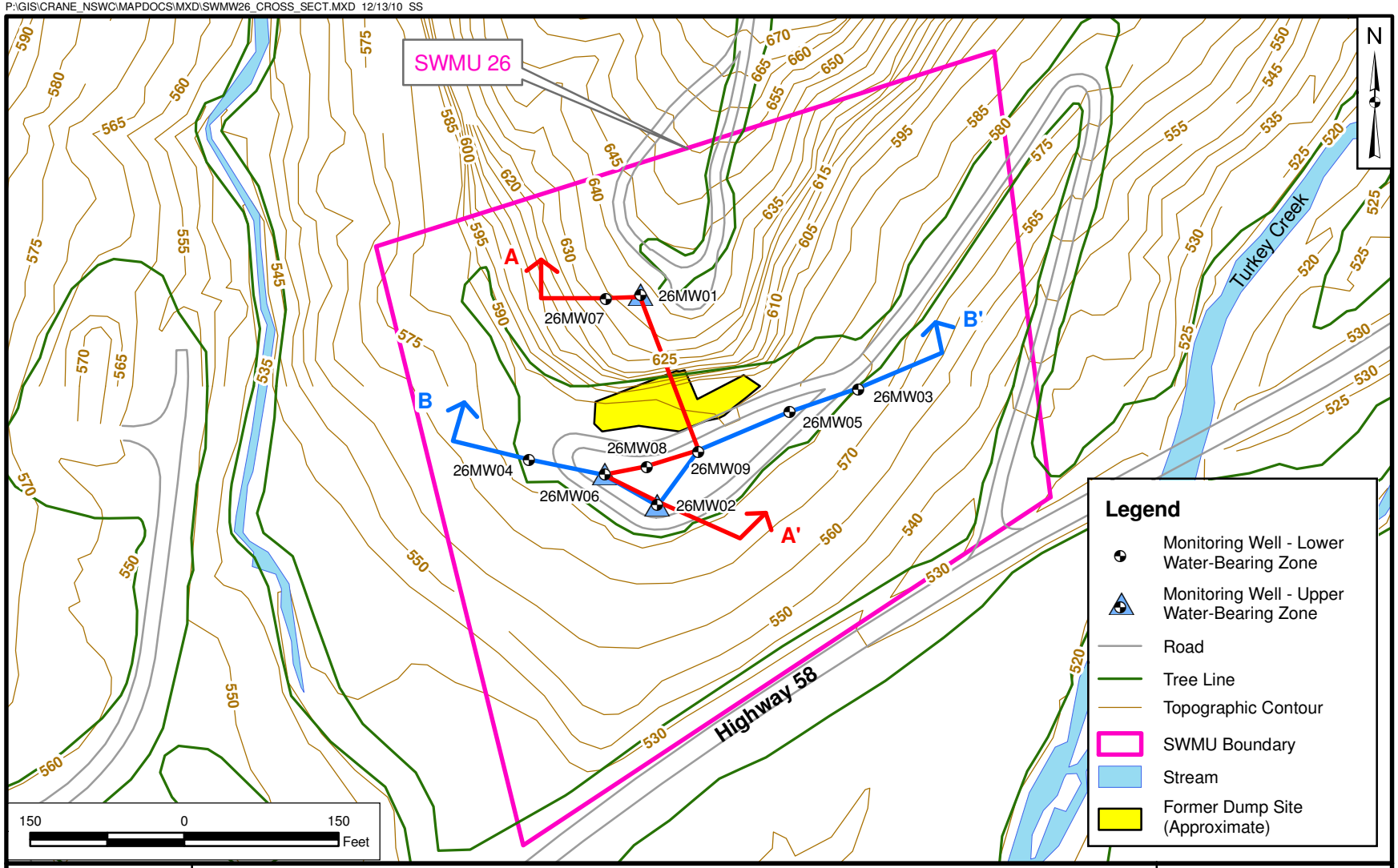

DRAWN BY S. STROZ	DATE 12/10/10	TETRA TECH	CONTRACT NUMBER CTO F27H
CHECKED BY G. TEN EYCK	DATE 12/13/10	GEOLOGIC CROSS SECTION LOCATION MAP SWMU 26 - HIGHWAY 58 DUMP SITE B NSA CRANE CRANE, INDIANA	APPROVED BY ___ DATE ___
REVISED BY ___	DATE ___		APPROVED BY ___ DATE ___
SCALE AS NOTED			FIGURE NO. FIGURE 10-4 / REV 0

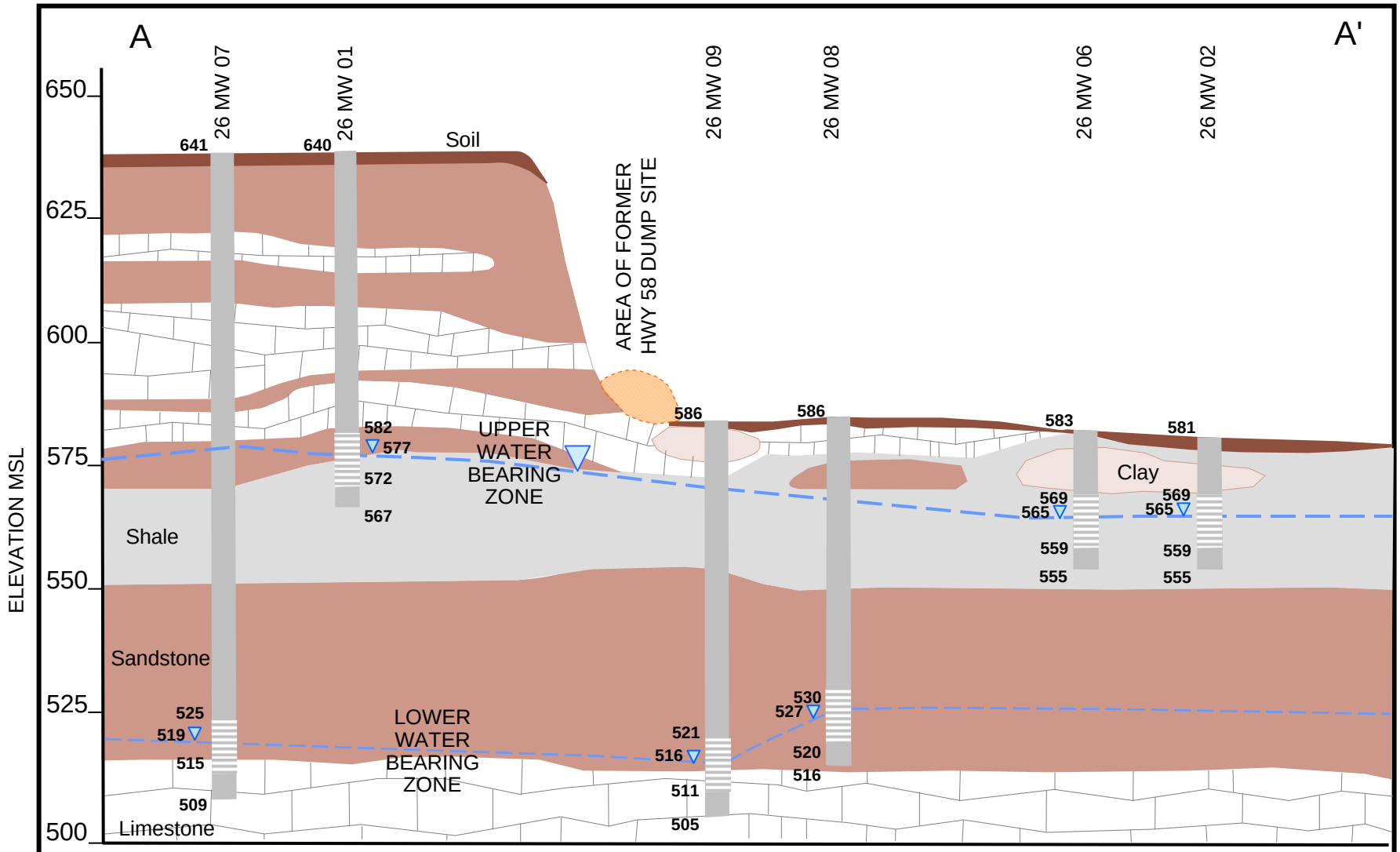

DRAWN BY C. PENNINGTON DATE 12-10-10	GEOLOGIC CROSS SECTION A-A'	CONTRACT NO.	
CHECKED BY K. LOSEKAMP DATE 12-10-10	SWMU 26 – HWY 58 DUMP SITE B	OWNER NO.	
REVISED BY DATE	NSA CRANE	APPROVED BY DATE	
SCALE NOT TO SCALE	CRANE, INDIANA	FIGURE NO. 10-5	REV.

LEGEND

- Sandstone
- Shale
- Limestone
- Soil
- Clay
- Water Level

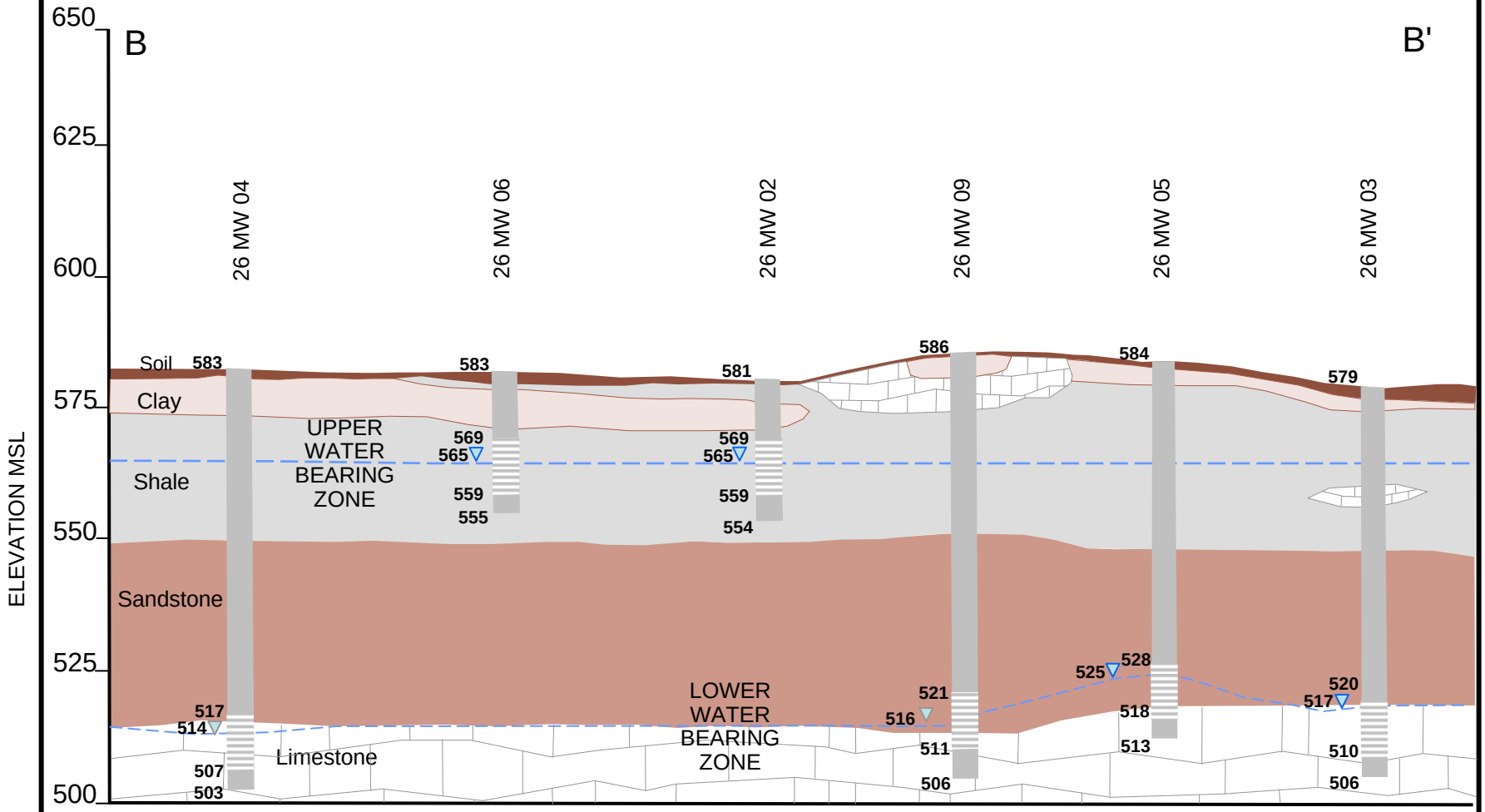

LEGEND

- Sandstone
- Shale
- Limestone
- Soil
- Clay
- Water Level

DRAWN BY C. PENNINGTON	DATE 02-21-11	GEOLOGIC CROSS SECTION B-B'	CONTRACT NO.
CHECKED BY K. LOSEKAMP	DATE 02-21-11	SWMU 26 – HWY 58 DUMP SITE B	OWNER NO.
REVISED BY	DATE	NSA CRANE	APPROVED BY / DATE
SCALE NOT TO SCALE	NAVFAC	CRANE, INDIANA	FIGURE NO. 10-6 / REV.

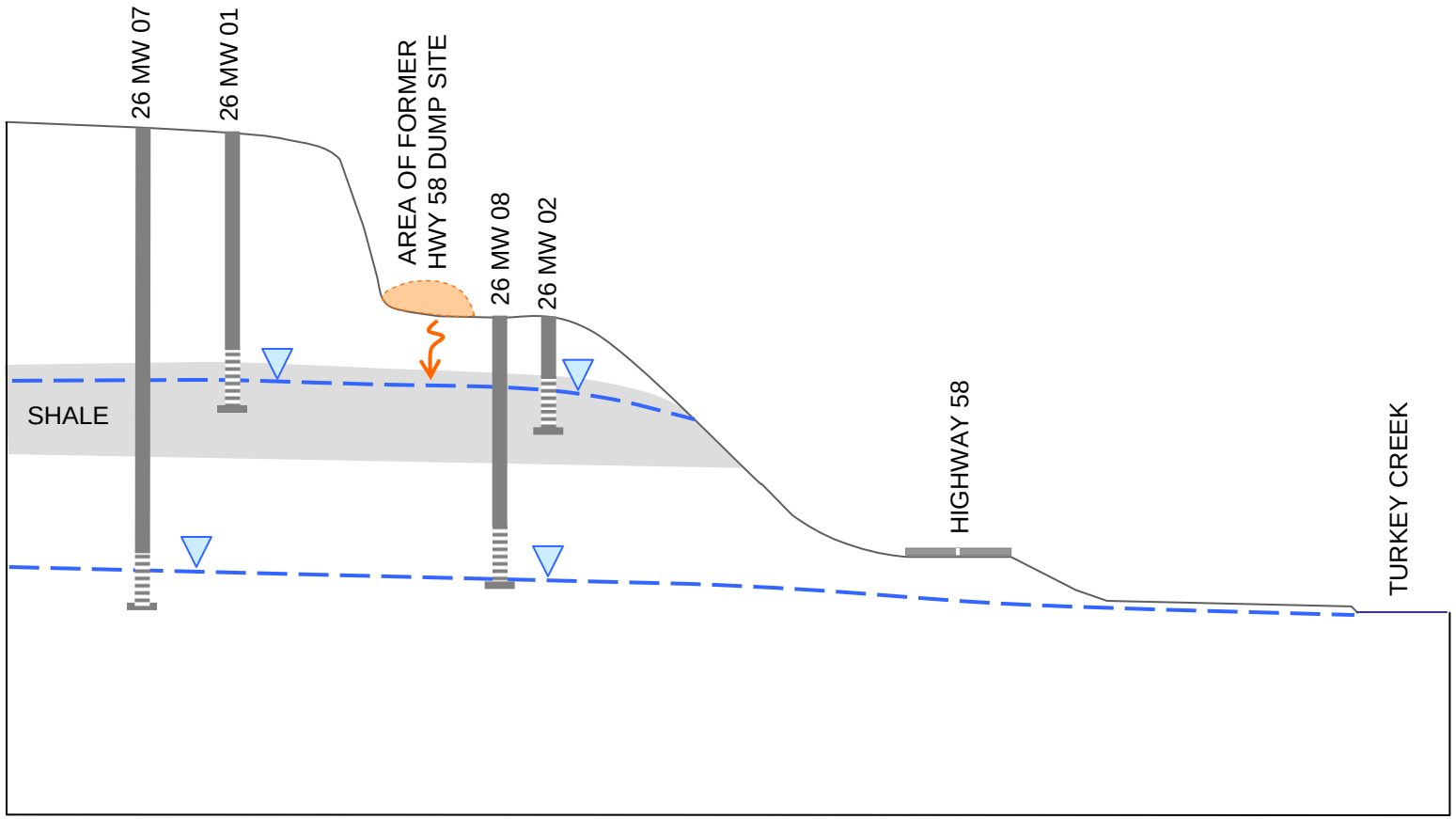

LEGEND

- Water Level
- Potential Release

DRAWN BY C. PENNINGTON	DATE 12-10-10	CONCEPTUAL SITE MODEL SWMU 26 – HWY 58 DUMP SITE B NSA CRANE CRANE, INDIANA	CONTRACT NO.
CHECKED BY K.LOSEKAMP	DATE 12-10-10		OWNER NO.
REVISED BY	DATE		APPROVED BY / DATE
SCALE NOT TO SCALE			FIGURE NO. 10-7 / REV.

FIGURE 10-8
HUMAN CONCEPTUAL EXPOSURE MODEL DIAGRAM
SWMU 26
NSA CRANE, INDIANA

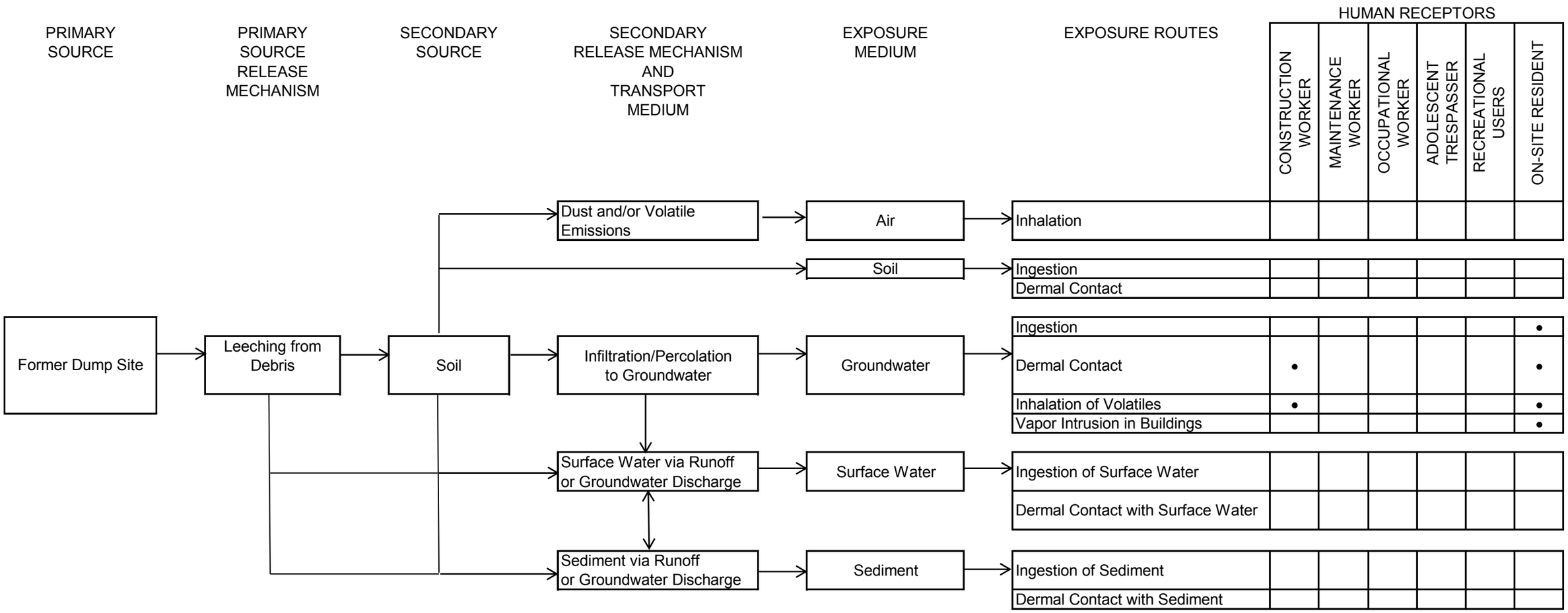

• Indicates receptor for evaluation

P:\GIS\CRANE_NSWC\MAPDOCS\MXD\SWMW26_PROP_MW_LOC.MXD 12/13/10 SS

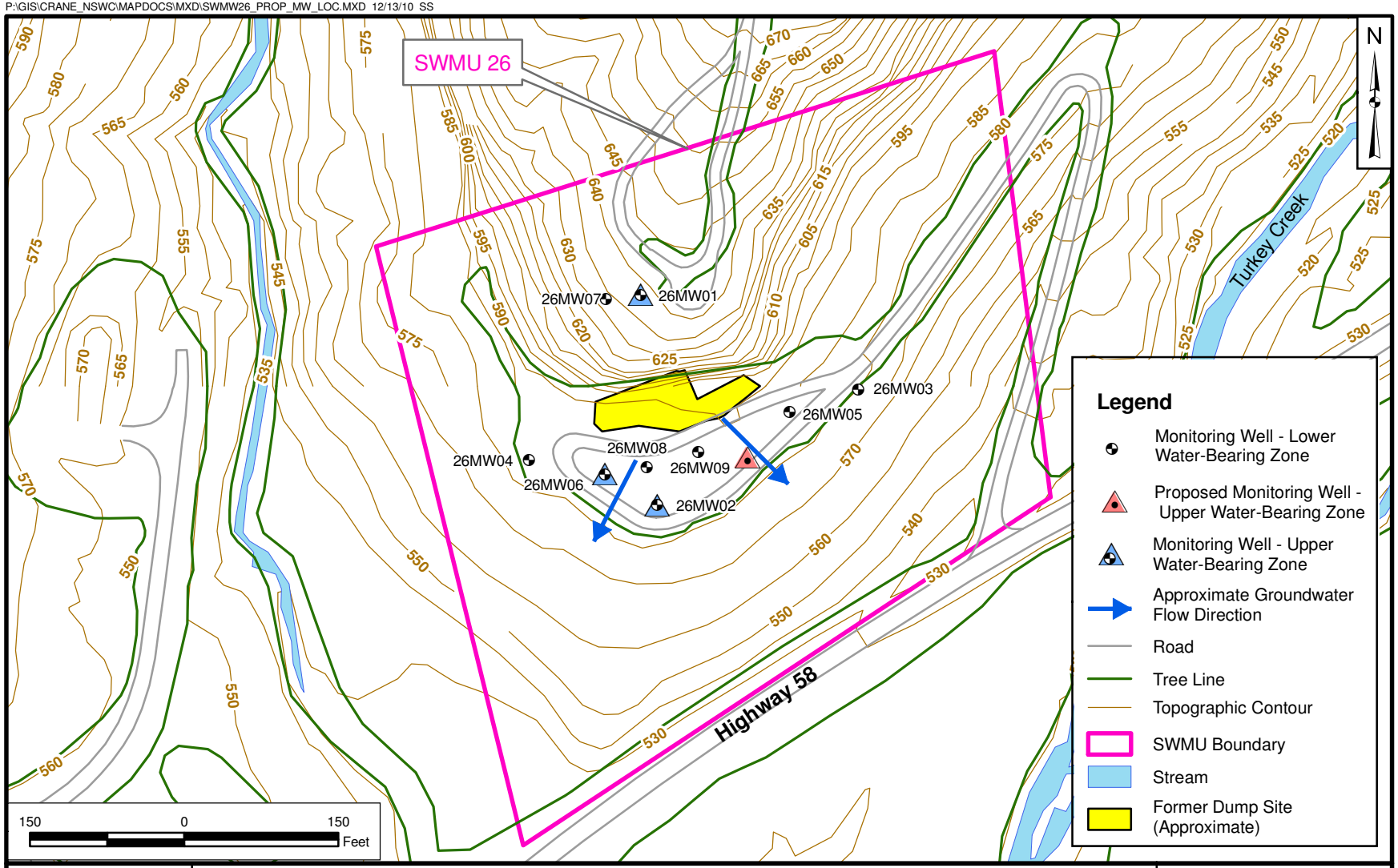

DRAWN BY	DATE	TETRA TECH	CONTRACT NUMBER
S. STROZ	12/10/10		CTO F27H
CHECKED BY	DATE	PROPOSED MONITORING WELL LOCATION	APPROVED BY / DATE
G. TEN EYCK	12/13/10	SWMU 26 - HIGHWAY 58 DUMP SITE B	___ / ___
REVISED BY	DATE	NSA CRANE	APPROVED BY / DATE
___	___	CRANE, INDIANA	___ / ___
SCALE			FIGURE NO. / REV
AS NOTED			FIGURE 17-1 / 0

APPENDIX A

FIELD STANDARD OPERATING PROCEDURES

APPENDIX A

FIELD STANDARD OPERATING PROCEDURES

TABLE OF CONTENTS

SOP-01 Global Positioning System
SOP-02 Sample Labeling
SOP-03 Sample Identification Nomenclature
SOP-04 Sample Custody and Documentation of Field Activities
SOP-05 Sample Preservation, Packaging, and Shipping
SOP-06 Decontamination of Field Sampling Equipment
SOP-07 Management of Investigation-Derived Waste
SOP-08 Drilling and Geologic Logging of Boreholes in Rock
SOP-09 Monitoring Well Installation
SOP-10 Monitoring Well Development
SOP-11 Measurement of Water Levels
SOP-12 Low-Flow Well Purging and Stabilization
SOP-13 Monitoring Well Sampling
SOP-14 Calibration and Care of Water Quality Meters

STANDARD OPERATING PROCEDURE

SOP-01

GLOBAL POSITIONING SYSTEM

1.0 PURPOSE

The purpose of this Standard Operating Procedure (SOP) is to provide the Field Technicians with basic instructions for operating a handheld Global Positioning System (GPS) unit allowing them to set GPS parameters in the receiver, record GPS positions on the field device, and update existing Geographic Information System (GIS) data. This SOP is specific to GIS quality data collection for Trimble-specific hardware and software.

If possible, the Trimble GeoXM or GeoXH Operators Manual should be downloaded onto the operator's personal computer for reference before or while in the field. The manual can be downloaded at http://trl.trimble.com/docushare/dsweb/Get/Document-311749/TerraSyncReferenceManual.pdf

Unless the operator is proficient in the setup and operation of the GPS unit, the Project Manager (or designee) should have the GPS unit shipped to the project-specific contact listed below in the Pittsburgh, Pennsylvania office at least five working days prior to field mobilization so project-specific shape files, data points, background images, and correct coordinate systems can be uploaded into the unit.

Tetra Tech NUS, Inc.
Attn: John Wright
661 Anderson Drive, Bldg #7
Pittsburgh, PA 15220

2.0 REQUIRED EQUIPMENT

The following hardware and software should be utilized for locating and establishing GPS points in the field:

2.1 Required GPS Hardware

- Hand-held GPS Unit capable of sub-meter accuracy (i.e. Trimble GeoXM or Trimble GeoXH). This includes the docking cradle, a/c adapter, stylus, and USB cable for data transfer.

Optional Accessories:

- External antenna
- Range pole
- Hardware clamp (for mounting Geo to range pole)
- GeoBeacon

- Indelible marker
- Non-metallic pin flags for temporary marking of positions

2.2 Required GPS Software

The following software is required to transfer data from the handheld GPS unit to a personal computer:

- Trimble TerraSync version 2.6 or later (pre-loaded onto GPS unit from vendor)

- Microsoft ActiveSync version 4.2 or later. Download to personal computer from: http://www.microsoft.com/windowsmobile/en-us/downloads/eulas/eula_activesync45_1033.mspx?ProductID=76

- Trimble Data Transfer Utility (freeware version 2.1 or later). Download to personal computer from: http://www.trimble.com/datatransfer.shtml

3.0 START-UP PROCEDURES

Prior to utilizing the GPS in the field, ensure the unit is fully charged. The unit may come charged from the vendor, but an overnight charge is recommended prior to fieldwork.

The Geo-series GPS units require a docking cradle for both charging and data transfer. The Geo-series GPS unit is docked in the cradle by first inserting the far domed end in the top of the cradled, then gently seating the contact end into the latch. The power charger is then connected to the cradle at the back end using the twist-lock connector. Attach a USB cable as needed between the cradle (B end) and the laptop/PC (A end).

It is recommended that the user also be familiar and check various Windows Mobile settings. One critical setting is the Power Options. The backlight should be set as needed to conserve power when not in use.

Start Up:

1) Power on the GPS unit by pushing the small green button located on the lower right front of the unit.

2) Utilizing the stylus that came with the GPS unit, launch **TerraSync** from the Windows Operating System by tapping on the start icon located in the upper left hand corner of the screen and then tap on **TerraSync** from the drop-down list.

3) If the unit does not default to the Setup screen, tap the Main Menu (uppermost left tab, just below the Windows icon) and select Setup.

4) If the unit was previously shipped to the Pittsburgh office for setup, you can skip directly to Section 4.0. However, to confirm or change settings, continue on to Section 3.1.

3.1 Confirm Setup Settings

Use the Setup section to confirm the TerraSync software settings. To open the Setup section, tap the Main Menu and select Setup.

1) Coordinate System
   a. Tap on the Coordinate System.
   b. Verify the project specs are correct for your specific project by scrolling through the various settings. Edit as needed and then tap OK; otherwise, tap Cancel to return to Setup Menu. **Note:** It is always best to utilize the Cancel tab rather than the OK tab if no changes are made since configurations are easily changed by mistake.
   c. Tap on the Units.
   d. Verify the user preferences are correct for your specific project by scrolling through the various settings. Edit as needed and then tap OK; otherwise, tap Cancel to return to Setup Menu.
   e. Tap Real-time Settings.
   f. Verify the Real-time Settings are correct for your specific project by scrolling through the various settings. Edit as needed and then tap OK; otherwise, tap Cancel to return to Setup Menu.
   g. The GPS unit is now configured correctly for your specific project.

4.0 ANTENNA CONNECTION

1) If a connection has been properly made with the internal antenna, a satellite icon along with the number of usable satellites will appear at the top of the screen next to the battery icon. If no connection is made (e.g.: no satellite icon), tap on the GPS tab to connect antenna.
2) At this point the GPS unit is ready to begin collecting data.

5.0 COLLECTING NEW DATA IN THE FIELD

1) From the Main Menu select Data.
2) From the Sub Menu (located below the Data tab) select New which will bring up the New Data File menu.
3) An auto-generated filename appears and should be edited for your specific project. If the integral keyboard does not appear, tap the small keyboard icon at the bottom of the screen.
4) After entering the file name, tap Create to create the new file.
5) Confirm antenna height if screen appears. Antenna height is the height that the GPS unit will be held from the ground surface (Typically 3 to 4 feet).
6) The Choose Feature screen appears.

5.1 Collecting Features

1) If not already open, the Collect Feature screen can be opened by tapping the Main Menu and selecting Data. The Sub Menu should default to Collect.
2) **Do not begin the data logging process until you are at the specific location for which you intend to log the data.**
3) A known reference or two should be shot at the beginning and at the end of each day in which the GPS unit is being used. This allows for greater accuracy during post-processing of the data.
4) Upon arriving at the specific location, tap on Point_generic as the Feature Name.
5) Tap Create to begin data logging.
6) In the Comment Box enter sample ID or location-specific information.
7) Data logging can be confirmed by viewing the writing pencil icon in the upper part of the screen. Also, the logging counter will begin. As a Rule of Thumb, accumulate a minimum of 20 readings on the counter, per point, as indicated by the logging counter before saving the GPS data.
8) Once the counter has reached a minimum number of counts (i.e. 20), tap on OK to save the data point to the GPS unit. Confirm the feature. All data points are automatically saved within the GPS unit.
9) Repeat steps 2 through 8, giving each data point a unique name or number.

Note: If the small satellite icon or the pencil icon is blinking, this is an indication the GPS unit is not collecting data. A possible problem may be too few satellites. While still in data collection mode, tap on Main Menu in upper left hand corner of the screen and select Status. Skyplot will display as the default showing the number of available satellites. To increase productivity (number of usable satellites) use the stylus to move the pointer on the productivity and precision line to the left. This will decrease precision, but increase productivity. The precision and productivity of the GPS unit can be adjusted as the number of usable satellites changes throughout the day. To determine if GPS is correctly recording data, see Section 5.2.

5.2 Viewing Data or Entering Additional Data Points to the Current File

1) To view the stored data points in the current file, tap on the Main Menu and select Map. Stored data points for that particular file will appear. Use the +/- and <-/-> icons in lower left hand corner of screen to zoom in/out and to manipulate current view.
2) To return to data collection, tap on the Main Menu and select Data. You are now ready to continue to collect additional data points.

5.3 Viewing Data or Entering Data Points from an Existing File

1) To view data points from a previous file, tap on Main Menu and select Data, then select File Manager from the Sub Menu.
4) Highlight the file you want to view and select Map from the Main Menu.
5) To add data points to this file, tap on Main Menu and select Data. Continue to collect additional data points.

6.0 NAVIGATION

This section provides instructions on navigating to saved data points in an existing file within the GPS unit.

1) From the Main Menu select Map.
2) Using the Select tool, pick the point on the map to where you want to navigate.
3) The location you select will have a box placed around the point.
4) From the Options menu, choose the Set Nav Target (aka set navigation target).
5) The location will now have double blue flags indicating this point is you navigation target.
6) From the Main Menu select Navigation.
7) The dial and data on this page will indicate what distance and direction you need to travel to reach the desired target.

8) Follow the navigation guide until you reach the point you select.
9) Repeat as needed for any map point by going back to Step 1.

7.0 PULLING IN A BACKGROUND FILE

This section provides instructions on pulling in a pre-loaded background file. These files are helpful in visualizing your current location.

1) From the Main Menu select Map, then tap on Layers, select the background file from drop down list.
2) Select the project-specific background file from the list of available files.
3) Once the selected background file appears, the operator can manipulate the screen utilizing the +/- and <-/-> functions at the bottom of the screen.
4) In operating mode, the operator's location will show up on the background file as a floating "x".

8.0 DATA TRANSFER

This section provides instructions on how to transfer stored data on the handheld GPS unit to a personal computer. Prior to transferring data from the GPS unit to a computer, Microsoft ActiveSync and Trimble Data Transfer Utility software must be downloaded to the computer from the links provided in Section 2.2 (Required GPS Software). If a leased computer is utilized in which the operator can not download files, see the Note at the end of Section 8.0.

1) See Attachment A at the end of this SOP for instructions on how to transfer data from the GPS to a personal computer.

Note: If you are unable to properly transfer data from the GPS unit to a personal computer, the unit should be shipped to the project-specific contact listed in Section 1.0 where the data will be transferred and the GPS unit then shipped back to the vendor.

9.0 SHUTTING DOWN

This section provides instruction for properly shutting down the GPS unit.

1) When shutting down the GPS unit for the day, first click on the "X" in the upper right hand corner.
2) You will be prompted to ensure you want to exit TerraSync. Select Yes.
3) Power off the GPS unit by pushing the small green button located on the bottom face of the unit.

4) Place the GPS unit in its cradle to recharge the battery overnight. Ensure the green charge light is visible on the charging cradle.

ATTACHMENT A

How to Transfer Trimble GPS Data between Data Collector and PC
original 11/21/06 (5/1/08 update) – John Wright

Remember – Coordinate System, Datum, and Units are critical!!!

Trimble Data Collection Devices:
Standard rental systems include the Trimble ProXR/XRS backpack and the newer handheld GeoXT or GeoXH units. Some of the older backpack system may come with either a RECON "PDA-style" or a TSCe or TSC1 alpha-numeric style data collector.

The software on all of the above units should be Trimble TerraSync (v 2.53 or higher – current version is 3.20) and to the user should basically look and function similar. The newer units and software versions (which should always be requested when renting) include enhancements for data processing, real-time display functions, and other features.

Data Transfer:
Trimble provides a free transfer utility program to aid in the transfer of GIS and field data. The Data Transfer Utility is a standalone program that will run on a standard office PC or laptop.

To connect a field data collector such as a RECON, GeoXM, GeoXT, GeoXH, or ProXH, you must first have Microsoft ActiveSync installed to allow the PC and the data collector to talk to one another. A standard USB cable is also needed to connect the two devices.

A CD or USB drive is provided with the data collector for use in data transfer. If needed, these programs are also available without charge via the web at:

• **Trimble Data Transfer Utility** (v 1.38) program to download the RECON or GeoXH field data to your PC: http://www.trimble.com/datatransfer.shtml

• **ActiveSync** from Microsoft to connect the data collector to the PC. The latest version (v4.5) can be found at: http://www.microsoft.com/windowsmobile/activesync/default.mspx
(see page 2 for data transfer instructions)

To Transfer Data Collected in the Field:

• Install the Data Transfer and ActiveSync software installed on your PC
• Connect the RECON or GeoXH to your PC via an A/B USB cable (blade end and square end type "HP printer" style)
• ActiveSync should auto-detect the connection and recognize the data collector
• Make sure the data file desired is CLOSED in TerraSync prior to transfer
• Connect via ActiveSync as a guest (not a partnership)
• Run the Trimble Data Transfer Utility program on your PC
• Select "***GIS Datalogger on Windows CE***" or similar selection
• Hit the green connect icon to the right - the far right area should say "***Connected to ....***" if successful
• Select the "***Receive***" data tab (under device)
• Select "***Data***" from file types on the right
• Find the file(s) needed for data transfer. You can sort the data files by clicking on the date/time header
• Select or browse to a C-drive folder you can put this file for emailing
• When the file appears on the list, hit the "***Transfer All***"
• Go to your Outlook or other email, send a message to: John.Wright@tetratech.com (or GIS department)
• Attach the file(s) you downloaded from your C-drive. For each TerraSync data file created you should have a packet of multiple data files. All need to be sent as a group – make sure you attach all files (the number of files may vary – examples include: ssf, obx, obs, gix, giw, gis, gip, gic, dd, and car)

To Transfer GIS Data from PC to the Field Device (must be converted in Pathfinder Office):

• Obtain GIS file(s) desired from GIS Department and have converted to Trimble extension
• Contact John Wright (John.Wright@tetratech.com) if needed for file conversion and upload support
• The GIS file(s) can be quickly converted if requested and sent back to the field user in the needed "Trimble xxx.imp" extension via email – then quickly downloaded from Outlook to your PC for transfer
• Install the Data Transfer and ActiveSync software installed on your PC
• Connect the RECON or GeoXH to your PC via an A/B USB cable (blade end and square end type "HP printer" style)
• ActiveSync should auto-detect the connection and recognize the data collector
• Connect via ActiveSync as a guest (not a partnership)
• Run the Trimble Data Transfer Utility program on your PC
• Select "***GIS Datalogger on Windows CE***" or similar selection
• Hit the green connect icon to the right - the far right area should say "***Connected to ....***" if successful
• Select the "**Send**" data tab (under device)
• Select "**Data**" from file types on the right (you can also send background files)
• Browse to the location of the data on your PC (obtain the file from Pathfinder Office or from the person who converted the data for field use)
• Select the options as appropriate for the name and location of the data file to go on the data collector (usually you can choose main memory or a data storage card)
• When the file(s) appears on the list, hit the "***Transfer All***"
• Run TerraSync on the field device and open the existing data files. Your transferred file should appear (make sure you have selected Main Memory, Default, or Storage Card as appropriate)

STANDARD OPERATING PROCEDURE

SOP-02

SAMPLE LABELING

1.0 PURPOSE

This Standard Operating Procedure (SOP) describes the procedures to be used for labeling sample containers. Sample labels are used to document the sample ID, date, time, analysis to be performed, preservative, matrix, sampler, and the analytical laboratory. A sample label will be attached to each sample container.

2.0 REQUIRED FIELD FORMS AND EQUIPMENT

Writing utensil (preferably black pen with indelible ink)
Disposable medical-grade gloves (e.g. latex, nitrile)
Sample log sheets
Required sample containers: All sample containers for analysis by fix-based laboratories will be supplied and deemed certified clean by the laboratory.
Sample labels
Chain-of-custody records
Sealable polyethylene bags
Heavy-duty cooler
Ice

3.0 PROCEDURES

3.1 The following information will be electronically printed on each sample label prior to mobilizing for field activities. Additional “generic” labels will also be printed prior to mobilization to be used for field QC and backups.

- Project Number
- Sample Location ID
- Contract Task Order Number (CTO F27H)
- Sample ID
- Matrix

- Preservative
- Analysis to be Performed
- Laboratory Name

3.2 Select the container(s) that are appropriate for a given sample. Select the sample-specific ID label(s), complete date, time, and sampler name, and affix to the sample container(s).

3.3 Fill the appropriate containers with sample material. Securely close the container lids without overtightening.

3.4 Place the sample container in a sealable polyethylene bag and place in a cooler containing ice.

Example of a sample label is attached at the end of this SOP.

4.0 ATTACHMENTS

1. Sample Label

ATTACHMENT 1

SAMPLE LABEL

Tetra Tech NUS, Inc. 661 Andersen Drive Pittsburgh, 15220 (412)921-7090	**Project:** **Location:** **CTO:**	
Sample No:		**Matrix:**
Date:	**Time:**	**Preserve:**
Analysis:		
Sampled by:	**Laboratory**	

STANDARD OPERATING PROCEDURE

SOP-03

SAMPLE IDENTIFICATION NOMENCLATURE

1.0 PURPOSE

The purpose of this Standard Operating Procedure (SOP) is to establish a consistent sample nomenclature system that will facilitate subsequent data management at the Naval Support Activity (NSA) Crane. The sample nomenclature system has been devised such that the following objectives can be attained.

- Sorting of data by site, location, or matrix
- Maintenance of consistency (field, laboratory, and database sample numbers)
- Accommodation of all project-specific requirements
- Accommodation of laboratory sample number length constraints
- Ease of sample identification

The NSA Crane Environmental Protection Department must approve any deviations from this procedure.

2.0 REQUIRED FIELD FORMS AND EQUIPMENT

Pen with indelible ink
Sample tags
Sample container labels

3.0 SAMPLE IDENTIFICATION NOMENCLATURE

3.1 Confirmation Samples

All confirmation samples will be properly labeled with a sample label affixed to the sample container. Each sample will be assigned a unique sample tracking number.

3.1.1 Confirmation Sample Numbering Scheme

The sample tracking number will consist of a four- or five-segment alpha-numeric code that identifies the sample's associated Solid Waste Management Unit (SWMU) number, sample type, location, and sample depth. For soil samples, the final four tracking numbers will identify the depth in units of feet below ground surface (bgs) at which the sample was collected (rounded to the nearest foot). For sediment samples, the final four tracking numbers will identify the depth in units of inches bgs at which the sample was collected.

The alphanumeric coding to be used is explained in the following diagram and subsequent definitions:

NN	**AA**	**AANN**	**NNNN (Soils and Sediment only)**
SWMU Number	Matrix	Sample Location Number	Sequential depth interval from freshly exposed surface

Character Type:

A = Alpha
N = Numeric

SWMU Number (NN):

26 = SWMU 26

Matrix Code (AA):

GW = Groundwater Sample

Location Number (AANN):

Location ID (the AA portion) is optional (not all samples will have this code), sequential number beginning with "01" for each matrix. The location ID may contain two letters (e.g., MW for Monitoring Well).

3.1.2 Examples of Sample Nomenclature

The first surface groundwater sample collected at SWMU 26 from monitoring well 1 would be labeled as "26MW01-01".

Deleted: 11

3.2 Field Quality Assurance/Quality Control (QA/QC) Sample Nomenclature

Field QA/QC samples are described in the UFP-SAP. They will be designated using a different coding system than the one used for regular field samples.

3.2.1 QC Sample Numbering

The QC code will consist of a four-segment alpha-numeric code that identifies the sample QC type, the date the sample was collected, and the number of this type of QC sample collected on that date.

NN	AA	AA	NNNNNN	NN
SWMU Number	Matrix	QC Type	Date	Sequence Number (per day)

The QC types are identified as:

TB = Trip Blank
RB = Rinsate Blank
FD = Field Duplicate

The sampling time recorded on the Chain-of-Custody Form, labels, and tags for duplicate samples will be “0000” so that the samples are "blind" to the laboratory. Notes detailing the sample number, time, date, and type will be recorded on the sample log sheets and will document the location of the duplicate sample (sample log sheets are not provided to the laboratory).

3.2.2 Examples of Field QA/QC Sample Nomenclature

The first duplicate of the day at SWMU 26 for a groundwater sample collected on collection date (mmddyear) would be designated as 26MW-FDXXXXXX-01.

The second duplicate of the day taken at SWMU 26 of a groundwater sample collected on collection date (mmddyear) would be designated as 26MW-FDXXXXXX-02.

The first rinsate blank associated with surface soil samples collected on collection date (mmddyear) would be designated as 26MW-RBXXXXXX-01.

STANDARD OPERATING PROCEDURE

SOP-04

SAMPLE CUSTODY AND DOCUMENTATION OF FIELD ACTIVITIES

1.0 PURPOSE

This Standard Operating Procedure (SOP) establishes the procedures for sample custody and documentation of field sampling and field analyses activities.

2.0 REQUIRED FIELD FORMS AND EQUIPMENT

The following logbooks, forms, labels, and equipment are required.

Writing utensil (preferably black pen with indelible ink)
Site logbook
Field logbook
Sample label
Chain-of-Custody Form
Custody seals
Equipment calibration log
Soil and Sediment Sample Log Sheet

3.0 PROCEDURES

This section describes custody and documentation procedures. All entries made into the logbooks, custody documents, logs, and log sheets described in this SOP must be made in indelible ink (black is preferred). No erasures are permitted. If an incorrect entry is made, the entry will be crossed out with a single strike mark, initialed, and dated.

3.1 <u>Site Logbook</u>

The site logbook is a hard-bound, paginated, controlled-distribution record book in which all major on-site activities are documented. At a minimum, the following activities and events will be recorded (daily) in the site logbook:

- All field personnel present
- Arrival/departure of site visitors
- Arrival/departure of equipment
- Start or completion of sampling activities
- Daily on-site activities performed each day
- Sample pickup information
- Health and safety issues
- Weather conditions

The site logbook is initiated at the start of the first on-site activity (e.g., site visit or initial reconnaissance survey). Entries are to be made for every day that on-site activities take place.

The following information must be recorded on the cover of each site logbook:

- Project name
- Project number
- Book number
- Start date
- End date

Information recorded daily in the site logbook need not be duplicated in other field notebooks but must summarize the contents of these other notebooks and refer to specific page locations in these notebooks for detailed information (where applicable). At the completion of each day's entries, the site logbook must be signed and dated by the Field Operations Leader (FOL).

3.2 Field Logbooks

The field logbook is a separate dedicated notebook used by field personnel to document his or her activities in the field. This notebook is hardbound and paginated.

3.3 Sample Labels

Adhesive sample container labels must be completed and applied to every sample container. Information on the label includes the project name, location, sample number, date, time, preservative, analysis, matrix, sampler's initials, and the name of the laboratory performing the analysis.

3.4 Chain-of-Custody Form

The Chain-of-Custody Form (COC) is a multi-part form that is initiated as samples are acquired and accompanies a sample (or group of samples) as it is transferred from person to person. Each COC is numbered. This form must accompany any samples collected for laboratory chemical analysis. A copy of a blank COC form is attached at the end of this SOP.

The FOL must include the name of the laboratory in the upper right hand corner section to ensure that the samples are forwarded to the correct location. If more than one COC is necessary for any cooler, the FOL will indicate "Page __ of __" on each COC. The original (top) signed copy of the COC will be placed inside a sealable polyethylene bag and taped inside the lid of the shipping cooler. Once the samples are received at the laboratory, the sample custodian checks the contents of the cooler(s) against the enclosed COC(s). Any problems are noted on the enclosed COC Form (bottle breakage, discrepancies between the sample labels, COC form, etc.) and will be resolved through communication between the laboratory point-of-contact and the Project Manager (PM). The COC form is signed and retained by the laboratory and becomes part of the sample's corresponding analytical data package.

3.5 Custody Seal

The custody seal is an adhesive-backed label, and it is part of the chain-of-custody process and is used to prevent tampering with samples after they have been collected in the field and sealed in coolers for transit to the laboratory. The custody seals are signed and dated by the samplers and affixed across the opening edges of each cooler (two seals per cooler) containing environmental samples. The laboratory sample custodian will examine the custody seal for evidence of tampering and will notify the TtNUS PM if evidence of tampering is observed.

3.6 Equipment Calibration Log

The Equipment Calibration Log is used to document calibration of measuring equipment used in the field. The Equipment Calibration Log documents that the manufacturer's instructions were followed for calibration of the equipment, including frequency and type of standard or calibration device. An Equipment Calibration Log must be maintained for each electronic measuring device requiring calibration. Entries must be made for each day the equipment is used.

4.0 ATTACHMENTS

1. Chain-of-Custody Record
2. Equipment Calibration Log

ATTACHMENT 1
CHAIN-OF-CUSTODY RECORD

CHAIN OF CUSTODY | NUMBER | PAGE ____ OF _____

PROJECT NO:	SITE NAME:	PROJECT MANAGER AND PHONE NUMBER	LABORATORY NAME AND CONTACT:
SAMPLERS (SIGNATURE)		FIELD OPERATIONS LEADER AND PHONE NUMBER	ADDRESS
		CARRIER/WAYBILL NUMBER	CITY, STATE

STANDARD TAT ☐
RUSH TAT ☐
☐ 24 hr. ☐ 48 hr. ☐ 72 hr. ☐ 7 day ☐ 14 day

DATE YEAR ____	TIME	SAMPLE ID	MATRIX	GRAB (G) COMP (C)	No. OF CONTAINERS	CONTAINER TYPE PLASTIC (P) or GLASS (G) / PRESERVATIVE USED / TYPE OF ANALYSIS								COMMENTS

1. RELINQUISHED BY	DATE	TIME	1. RECEIVED BY	DATE	TIME
2. RELINQUISHED BY	DATE	TIME	2. RECEIVED BY	DATE	TIME
3. RELINQUISHED BY	DATE	TIME	3. RECEIVED BY	DATE	TIME

COMMENTS

DISTRIBUTION: WHITE (ACCOMPANIES SAMPLE) YELLOW (FIELD COPY) PINK (FILE COPY)

3/99
FORM NO. TtNUS-001

ATTACHMENT 2
EQUIPMENT CALIBRATION LOG

Tetra Tech NUS, Inc.

EQUIPMENT CALIBRATION LOG

PROJECT NAME : _____ INSTRUMENT NAME/MODEL: _____

SITE NAME: _____ MANUFACTURER: _____

PROJECT No.: _____ SERIAL NUMBER: _____

Date of Calibration	Instrument I.D. Number	Person Performing Calibration	Instrument Settings		Instrument Readings		Calibration Standard (Lot No.)	Remarks and Comments
			Pre-calibration	Post-calibration	Pre-calibration	Post-calibration		

STANDARD OPERATING PROCEDURE

SOP-05

SAMPLE PRESERVATION, PACKAGING, AND SHIPPING

1.0 PURPOSE

This Standard Operating Procedure (SOP) describes the procedures for sample preservation, packaging, and shipping to be used in handling soil, sediment, and aqueous samples.

2.0 REQUIRED FIELD FORMS AND EQUIPMENT

Shipping labels

Custody seals

Chain-of-custody (COC) form(s)

Sample containers with preservatives: All sample containers for analysis by fixed-base laboratories will be supplied, with preservatives added (if required) and deemed certified clean by the laboratory.

Sample shipping containers (coolers): All sample shipping containers are supplied by the laboratory.

Packaging material: Bubble wrap, sealable polyethylene bags, strapping tape, etc.

3.0 PROCEDURES FOR SAMPLE PRESERVATION, PACKAGING, AND SHIPPING

3.1 The laboratory provides sample containers with preservative already included (as required) for the analytical parameter for which the sample is to be analyzed. All samples will be held, stored, and shipped at 4 degrees Celcius (°C). This will be accomplished through refrigeration (used to hold samples prior to shipment) and/or ice.

3.2 The sampler shall maintain custody of the samples until the samples are relinquished to another custodian or to the common carrier.

3.3 Check that each sample container is properly labeled, the container lid is securely fastened, and the container is sealed in a polyethylene bag.

3.4 If the container is glass, place the sample container into a bubble-out shipping bag and seal the bag using the self-sealing, pressure sensitive tape supplied with the bag.

3.5 Inspect the insulated shipping cooler. Check for any cracks, holes, broken handles, etc. If the cooler has a drain plug, make certain it is sealed shut, both inside and outside of the cooler. If the cooler is questionable for shipping, the cooler must be discarded.

3.6 Line the cooler with large plastic bag, and line the bottom of the cooler with a layer of bubble wrap. Place the sample containers into the shipping cooler in an upright position (containers will be upright, with the exception of any 40-milliliter vials). Continue filling the cooler with ice until the cooler is nearly full and the movement of the sample containers is limited.

3.7 Wrap the large plastic bag closed and secure with tape.

3.8 Place the original (top) signed copy of the COC form inside a sealable polyethylene bag. Tape the bag to the inside of the lid of the shipping cooler.

3.9 Close the cooler and seal the cooler with approximately four wraps of strapping tape at each end of the cooler. Prior to wrapping the last wrap of strapping tape, apply a signed and dated custody seal to each side of the cooler (one per side). Cover the custody seal with the last wrap of tape. This will provide a tamper evident custody seal system for the sample shipment.

3.10 Affix shipping labels to each of the coolers, ensuring all of the shipping information is filled in properly. Overnight (e.g., FedEx Priority Overnight) courier services will be used for all sample shipments.

3.11 All samples will be shipped to the laboratory no more than 72 hours after collection. Under no circumstances should sample hold times be exceeded.

STANDARD OPERATING PROCEDURE

SOP-06

DECONTAMINATION OF FIELD SAMPLING EQUIPMENT

1.0 PURPOSE

This Standard Operating Procedure (SOP) establishes the procedures to be followed when decontaminating non-dedicated field sampling equipment during the field investigations.

2.0 REQUIRED FIELD FORMS AND EQUIPMENT

Writing utensil (preferably black pen with indelible ink)
Non-latex rubber or plastic gloves
Cotton gloves
Field logbook
Potable water
Deionized water
Isoproponal (optional)
LiquiNox detergent
Brushes, spray bottles, paper towels, etc.
Container to collect and transport decontamination fluids

3.0 DECONTAMINATION PROCEDURES

3.1 Don non-latex and/or cotton gloves and decontaminate sampling equipment (in accordance with the following steps) prior to field sampling and between samples.

3.2 Rinse the equipment with potable water. Rinsing may be conducted by spraying with water from a spray bottle or by dipping. Collect the potable water rinsate into a container.

3.3 Wash the equipment with a solution of LiquiNox detergent. Prepare the LiquiNox wash solution in accordance with the instructions on the LiquiNox container. Collect the LiquiNox wash solution into a container. Use brushes or sprays as appropriate for the equipment. If oily residue has accumulated on the sampling equipment, remove the residue with an isopropanol wash and repeat the LiquiNox wash.

3.4 Rinse the equipment with potable water. Rinsing may be conducted by spraying with water from a spray bottle or by dipping. Collect the potable water rinsate into a container.

3.5 Rinse the equipment with deionized water. Rinsing may be conducted by spraying with water from a spray bottle or by dipping. Collect the deionized water rinsate into a container.

3.6 Remove excess water by air drying, shaking, or by wiping with paper towels as necessary.

3.7 Document decontamination by recording it in the field logbook.

3.8 Containerized decontamination solutions will be managed in accordance with the procedures described in SOP-07 and this UFP-SAP.

STANDARD OPERATING PROCEDURE

SOP-07

MANAGEMENT OF INVESTIGATION-DERIVED WASTE

1.0 PURPOSE

This Standard Operating Procedure (SOP) describes how investigation-derived waste (IDW) will be collected, segregated, classified, and managed during the field investigations at Naval Support Activity (NSA) Crane. The following types of IDW will be generated during this investigation:

- Monitoring well development and well purge waters
- Decontamination solutions
- Personal protective equipment and clothing (PPE)
- Miscellaneous trash and incidental items

2.0 REQUIRED FIELD FORMS AND EQUIPMENT

Health and safety equipment (with PPE)
Bucket (with collected development/purge water)
Decontamination equipment
Field logbook
Writing utensil (preferably black pen with indelible ink)
Plastic sheeting and/or tarps
55-gallon drums with sealable lids
IDW labels for drums
Plastic garbage bags

3.0 PROCEDURES

Management of IDW includes the collection, segregation, temporary storage, classification, final disposal, and documentation of the waste-handling activities if necessary.

3.1 Liquid Wastes

Liquid wastes that will be generated during the site activities include decontamination solutions from sampling equipment. These wastes will be collected and containerized in a central location at NSA Crane for proper disposal.

3.3 PPE and Incidental Trash

All PPE wastes and incidental trash materials (e.g., wrapping or packing materials from supply cartons, waste paper) will be decontaminated (if contaminated), double bagged, securely tied shut, and placed in a designated waste receptacle at NSA Crane.

STANDARD OPERATING PROCEDURE

SOP-8

DRILLING AND GEOLOGIC LOGGING OF BOREHOLES IN ROCK

1.0 PURPOSE

This procedure provides general guidance and reference information to drill rock borings and identify the equipment, sequence of events, and appropriate methods necessary to obtain rock cores and prepare boring logs during drilling activities. Up to two types of drilling activities and equipment may be used to drill holes and install monitoring wells at the NSWC Crane facility:

- In the event that rock samples are needed, a diamond coring equipment will be used to core through the bedrock. NX or similar size diamond core barrels will be used to collect 2- to 3-inch-diameter continuous rock core. These cores will be used to describe the lithologic characteristics and fracture distributions in the bedrock. Diamond coring is relatively slow and more expensive compared to the air rotary method of drilling; therefore this method may not be used.

- Air-rotary drilling will be used to either ream out the cored hole to a larger diameter if the diamond-cored hole mentioned above is used or will be used to drill the well boring described in the UFP-SAP. The hole needs to be a minimum of 5 inches in diameter in order to install 2-inch-diameter monitoring wells.

The methods described herein are specific for soil, groundwater, and soil gas samples at Naval Support Activity (NSA) Crane. Guidelines by Southern Division, Naval Facilities Engineering Command, (South Div NAVFAC, 1997) and the State of Indiana regulatory requirements in Article 16 Water Well Drillers of Chapter 310 of the Indiana Annotated Codes (310 IAC 16) should be consulted.

2.0 RESPONSIBILITIES

Driller - The driller provides adequate and operable equipment, sufficient quantities of materials, and an experienced and efficient labor force capable of performing all phases of proper monitoring well installation and construction.

Field Geologist - The field geologist supervises and documents DPT activity performed by the driller, and insures that the soil, rock, and groundwater samples collected accurately representative the desired

media and sample interval. Geotechnical engineers, field technicians, or other suitable trained personnel may also serve in this capacity.

All Field Personal – All field personal including, the drilling contractor personnel and other field staff, must have all of the health and safety training required to perform the work, as specified in the Health and Safety Plan (HASP). All field personnel shall be aware of the potential presence of underground utilities. Proper utility clearance must be obtained by the Project Manager prior to any drilling activity.

If the potential of Unexploded Ordnance (UXO) is present at the site, UXO clearance to six feet will be required for subsurface samples at or within the 100-foot radius of the center of the OB/OD unit. Every two feet the drill rig shall be withdrawn and a downhole magnetometer used to check for UXO. If the presence of any UXO is suspected, the drilling location will be shifted two feet and drilling resumed. A trained UXO technician will be part of the TtNUS field team.

3.0 DRILLING AND SAMPLING PROCEDURES

General

A common methodology for the drilling of rock is the use of an air-rotary drilling method. However, this drilling method can be very expensive and does not yield good rock samples. A common methodology for the collection of rock samples through the use of diamond coring equipment. If the purpose of the boring is to place a groundwater monitoring well and no rock samples are needed, the air-rotary drilling method can be used without the use of the diamond coring equipment.

3.1 Rock Coring

Drilling is done by rotating and applying downward pressure to the drill rods and drill bit. The drill bit is a circular, hollow, diamond-studded bit attached to the outer core barrel in a double-tube core barrel. The use of single-tube core barrels is not recommended because the rotation of the barrel erodes the sample and limits its use for detailed geological evaluation. Water or air is circulated down through the drill rods and annular space between the core barrel tubes to cool the bit and remove the cuttings. The bit cuts a core out of the rock that rises into an inner barrel mounted inside the outer barrel. The inner core barrel and rock core are removed by lowering a wire line with a coupling into the drill rods, latching onto the inner barrel, and withdrawing the inner barrel. A less efficient variation of this method utilizes a core barrel that cannot be removed without pulling all the drill rods. This variation is practical only if fewer than 50 feet of core is required. When coring rock, the speed of the drill and the drilling pressure, amount and

pressure of water, and length of run can be varied to give the maximum recovery from the rock being drilled.

Advantages of core drilling include

- Undisturbed rock cores can be recovered for examination and/or testing.
- In formations in which the cored hole will remain open without casing, water from the rock fractures may be recovered from the well without the installation of a well screen and gravel pack.
- Formation logging is extremely accurate.
- Drill rigs are relatively small and mobile.

Disadvantages include

- Water or air is needed for drilling.
- Coring is slower than rotary drilling (and more expensive).
- Depth to water cannot accurately be determined if water is used for drilling.
- The size of the borehole is limited.

This drilling method is useful if accurate determinations of rock lithology are desired or if open wells are to be installed into bedrock. To install monitoring wells in coreholes, the hole will be reamed out to the proper size after boring, using air rotary drilling methods. Rock coring enables a detailed assessment of borehole conditions to be made, showing precisely all lithologic changes and characteristics. Because coring is an expensive drilling method, it is commonly used for shallow studies of 500 feet or less or for specific intervals in the drill hole that require detailed logging and/or analyzing. Rock coring can, however, proceed for thousands of feet continuously, depending on the size of the drill rig, and can yield better quality data than air-rotary drilling, although at a substantially reduced drilling rate.

Borehole diameter can be drilled to various sizes, depending on the information needed. NX, or a similar size (2- to 3-inch-diameter core recovery), may be used.

Begin the core drilling using a double-tube swivel-core barrel of the desired size. After drilling no more than 10 feet (3 meters), remove the core barrel from the hole and take out the core. If the core blocks the flow of the drilling fluid during drilling, remove the core barrel immediately.

Since rock structures and the occurrence of bedding planes, porosity type and distribution, and fracture patterns are among the most important items to be detected and described, take special care to obtain

and record these features. If such broken zones or cavities prevent further advance of the boring, one of the following three steps shall be taken: cement the hole, ream and case, or case and advance with the next smaller size core barrel, as conditions warrant.

3.2 Rock Core Management and Labeling

When the core barrel has been recovered, the rock core will be carefully removed from the barrel, placed in a core tray (previously labeled "top" and "bottom" to avoid confusion), classified, and measured for percentage of recovery as well as the rock quality designation (RQD). Each core will be described, classified, and logged using a uniform system (Section 3.5 of this SOP).

Rock cores will be placed in the sequence of recovery in well-constructed wooden or cardboard boxes provided by the drilling contractor. Rock cores from two different borings will not be placed in the same core box. The core boxes will be constructed to accommodate at least 20 linear feet of core in rows of approximately 5 feet each. Wood partitions will be placed at the end of each core run. The depth from the surface of the boring to the top and bottom of the drill run and run number will be marked on the wooden partitions with indelible ink. These blocks will serve to separate successive core runs and indicate depth intervals for each run. The order of placing cores will be the same in all core boxes. Rock core will be placed in the box so that, when the box is open, with the inside of the lid facing the observer, the top of the cored interval contained within the box is in the upper left corner of the box and the bottom of the cored interval is in the lower right corner of the box. The top and bottom of each core obtained and their true depths will be clearly and permanently marked on each box. The width of each row must be compatible with the core diameter to prevent lateral movement of the core in the box. Similarly, an empty space in a row will be filled with an appropriate filler material or spacers to prevent longitudinal movement of the core in the box.

The inside and outside of the core-box lid will be marked by indelible ink to show all pertinent data about the box's contents. At a minimum, the following information will be included:

Project name

- Project number
- Boring number
- Run numbers
- Footage (depths)
- Recovery
- RQD (%)
- Box number and total number of boxes for that boring (Example: Box 5 of 7)

- Contact person's name and telephone number

For easy retrieval when core boxes are stacked, the sides and ends of the box will also be labeled and will include project number, boring number, top and bottom depths of core, and box number.

Before final closing of the core box, a photograph will be taken of the recovered core and the labeling on the inside cover will be taken. If moisture content is not critical, the core shall be wetted and wiped clean for the photograph. (This will help to show true colors and bedding features in the cores.)

3.3 Air-rotary Drilling

Air-rotary drilling is a method of drilling where the drill rig simultaneously turns and exerts a downward pressure on the drilling rods and bit while circulating compressed air down the inside of the drill rods, around the bit, and out the annulus of the borehole. Air circulation serves to both cool the bit and remove the cuttings from the borehole.

Advantages of this method include

- The drilling rate is high (even in rock).
- The cost per foot of drilling is relatively low.
- Air-rotary rigs are common in most areas.
- No drilling fluid is required (except when water is injected to keep down dust).
- The borehole diameter is large to allow room for proper well installation procedures.

Disadvantages to using this method include

- Formations must be logged from the cuttings that are blown to the surface and thus the depths of materials logged are approximate.

- Air blown into the formation during drilling may "bind" the formation and impede well development and natural groundwater flow.

- In-situ samples cannot be taken, unless the hole is cased.

- Air-rotary drill rigs are large and heavy.

- Large amounts of investigation-derived waste (IDW) may be generated that may require containerization, sampling, and off-site disposal.

4.0 GEOLOGIC DESCRIPTION OF BOREHOLES IN ROCK

These procedures provide descriptions of the standard techniques for borehole and sample logging. These logging techniques will be used for each boring to provide consistent descriptions of subsurface lithology. While experience is the only method to develop confidence and accuracy in the description of soil and rock, the field geologist or engineer can do a good job of classification by careful, thoughtful observation and by being consistent throughout the classification procedure.

The classification of soil and rocks is one of the most important jobs of the field geologist or engineer. To maintain a consistent flow of information, it is imperative that the field geologist or engineer understand and accurately use the field classification system described in this SOP. This identification is based on visual examination and manual tests.

4.1 Required Field Forms and Equipment

When logging soil and rock samples, the geologist or engineer should be equipped with the following:

Rock hammer
Knife
Camera
10% Dilute hydrochloric acid (HCl)
Ruler (marked in tenths and hundredths of feet)
Hand lens
Writing utensil with indelible ink
Field logbook
Disposable medical-grade gloves (e.g., latex, nitrile)
Soil/rock classification sheets

4.2 Classification of Rocks

Claystone - Very fine-grained rock made up of particle less than 1/256 mm in diameter. Fractures irregularly. Very smooth to touch. Generally has irregularly spaced pitting on surface of drilled cores.

Shale - A fissile, very fine-grained rock with particles less than 1/256 mm in diameter. Fractures along bedding planes.

Limestone - Rock made up predominantly of calcite ($CaCO_3$, which is mainly fossilized animal and plant debris). Effervesces strongly upon the application of dilute hydrochloric acid.

Coal – A very dark colored rock consisting mainly of organic (mainly fossilized plant debris) remains.

Others - Numerous other sedimentary rock types are present in lesser amounts in the stratigraphic record.

The local abundance of any of these rock types is dependent upon the depositional history of the area. Conglomerate, halite, gypsum, dolomite, anhydrite, lignite, etc. are some of the rock types found in lesser amounts.

In classifying a sedimentary rock, the following hierarchy will be noted: Rocks are grouped into three main divisions: sedimentary, igneous, and metamorphic. Sedimentary rocks are by far the predominant type exposed at the earth's surface and are the only type present at NSWC Crane. The following basic names are applied to the types of rocks found in sedimentary sequences:

Sandstone - Made up predominantly of granular materials ranging between 1/16 to 2 mm in diameter.

Siltstone - Made up of granular materials between 1/16 to 1/256 mm in diameter. Fractures irregularly. Medium thick to thick bedded.

4.2.1 Rock Type

As described above, there are numerous types of sedimentary rocks. In most cases, a rock will be a combination of several grain types; therefore, a modifier such as "sandy siltstone" or a "silty sandstone" can be used. The modifier indicates that a significant portion of the rock type is composed of the modifier. Other modifying descriptions can include carbonaceous, calcareous, siliceous, fossiliferous, etc.

Grain size is the basis for the classification of clastic (sandstones, siltstones, and shales) sedimentary rocks. The Udden-Wentworth classification will be assigned to sedimentary rocks (shown below). The individual boundaries are slightly different than the USGS subdivision for soil classification. For field determination of grain sizes, a scale can be used for the coarse-grained rocks. Alternatively, the division between siltstone and shale may be measurable in the field by the use of a hand lens. If the grains cannot be seen with the naked eye but are distinguishable with a hand lens, the rock is a siltstone. If the grains are not distinguishable with a hand lens, the rock is a shale.

GRAIN SIZE CLASSIFICATION FOR ROCKS

Particle Name	Grain Size Diameter
Cobbles	> 64 mm
Pebbles	4 - 64 mm

Granules	2 - 4 mm
Very Coarse Sand	1 - 2 mm
Coarse Sand	0.5 - 1 mm
Medium Sand	0.25 - 0.5 mm
Fine Sand	0.125 - 0.25 mm
Very Fine Sand	0.0625 - 0.125 mm
Silt	0.0039 - 0.0625 mm
After Wentworth, 1922	

4.2.2 Color

The color of a rock can be determined in a similar manner as for soil samples. Rock core samples will be classified while wet, when possible, and air-cored samples will be scraped clean of cuttings prior to color classifications. Soil colors will be described utilizing a single color descriptor preceded, when necessary, by a modifier to denote variations in shade or color mixtures. A soil could therefore be referred to as "gray" or "light gray" or "blue-gray." Since color can be utilized in correlating units between sampling locations, it is important for color descriptions to be consistent from one boring to another.

4.2.3 Bedding Thickness

The bedding thickness designations listed below will also be used for rock classification.

BEDDING THICKNESS CLASSIFICATION

Thickness (metric)	Thickness (Approximate English Equivalent)	Classification
> 1.0 meter	> 3.3'	Massive
30 cm - 1 meter	1.0' - 3.3'	Thick bedded
10 cm - 30 cm	4" - 1.0'	Medium bedded
3 cm - 10 cm	1" - 4"	Thin bedded
1 cm - 3 cm	2/5" - 1"	Very thin bedded
3 mm - 1 cm	1/8" - 2/5"	Laminated
1 mm - 3 mm	1/32" - 1/8"	Thinly laminated
< 1 mm	<1/32"	Micro laminated

(Ingram, 1954)

4.2.4 Hardness

The hardness of a rock is a function of the compaction, cementation, and mineralogical composition of the rock. A relative scale for sedimentary rock hardness is as follows:

Soft - Weathered, considerable erosion of core, easily gouged by screwdriver, scratched by fingernail. Soft rock crushes or deforms under pressure of a pressed hammer. This term is always used for the hardness of the saprolite (decomposed rock that occupies the zone between the lowest soil horizon and firm bedrock).

Medium soft - Slight erosion of core, slightly gouged by screwdriver, or breaks with crumbly edges from single hammer blow.

Medium hard - No core erosion, easily scratched by screwdriver, or breaks with sharp edges from single hammer blow.

Hard - Requires several hammer blows to break and has sharp conchoidal breaks. Cannot be scratched with screwdriver.

Note the difference in usage of the words "scratch" and "gouge." A scratch will be considered a slight depression in the rock (do not mistake the scraping off of rock flour from drilling with a scratch in the rock itself), and a gouge is much deeper.

4.2.5 Fracturing

Method of Calculating RQD
(After Deere, 1966)

Fractures should also be noted.

$$RQD\ \% = r/l \times 100$$

r = Total length of all pieces of the lithologic unit being measured that are greater than 4 inches in length and have resulted from natural breaks. Natural breaks include slickensides, joints, compaction slicks, bedding plane partings (not caused by drilling), friable zones, etc.

l = Total length of the coring run.

4.2.6 Weathering

The degree of weathering is a significant parameter that is important in determining weathering profiles and is also useful in engineering designs. The following terms can be applied to distinguish the degree of weathering:

Fresh - The rock shows little or no weathering effect. Fractures or joints have little or no staining and rock has a bright appearance.

Slight - The rock has some staining that may penetrate several centimeters into the rock. Clay filling of joints may occur. Feldspar grains may show some alteration. Oxidation and weathering may affect the degree of fracturing or brokenness of a rock. After eliminating drilling breaks, the average spacing of natural breaks is calculated and the fracturing is described by the following terms:

Very broken (V. BR.) - Less than 2-inch spacing between fractures
Broken (BR.) - 2-inch to 1-foot spacing between fractures
Blocky (BL.) - 1- to 3-foot spacing between fractures
Massive (M.) - 3- to 10-foot spacing between fractures

The structural integrity of the rock can be approximated by calculating the rock quality designation (RQD) of cores recovered. The RQD is determined by adding the total lengths of all pieces exceeding 4 inches and dividing by the total length of the coring run to obtain a percentage.

Moderate - Most of the rock, with exception of quartz grains, is stained. Rock is weakened due to weathering and can be easily broken with a hammer.

Severe - All rock including quartz grains is stained. Some of the rock is weathered to the extent of becoming a soil. Rock is very weak.

4.2.7 Other Characteristics

The following items will be included in the rock description:

Description of contact between two rock units. These can be sharp or gradational.

- Stratification (parallel, cross stratified).
- Description of any filled cavities or vugs.
- Cementation (calcareous, siliceous, hematitic).
- Description of any joints or open fractures.
- Observation of the presence of fossils.
- Notation of joints with depth, approximate angle to horizontal, any mineral filling or coating, and degree of weathering.

All information shown on the boring logs will be neat so it can be reproduced on a copy machine for report presentation. The data will be kept current to provide control of the drilling program and to indicate various areas requiring special consideration and sampling.

4.2.8 Additional Terms Used in the Description of Rock

The following terms are used to further identify rocks:

Seam - Thin (12 inches or less), probably continuous layer.

Some - Indicates significant (15 to 40 percent) amounts of the accessory material. For example, rock composed of seams of sandstone (70 percent) and shale (30 percent) would be "sandstone -- some shale seams."

Few - Indicates insignificant (0 to 15 percent) amounts of the accessory material. For example, rock composed of seam of sandstone (90 percent) and shale (10 percent) would be "sandstone -- few shale seams."

Interbedded - Used to indicate thin or very thin alternating seams of material occurring in approximately equal amounts. For example, rock composed of thin alternating seams of sandstone (50 percent) and shale (50 percent) would be "interbedded sandstone and shale."

Interlayered - Used to indicate thick alternating seams of material occurring in approximately equal amounts.

4.2.9 Abbreviations

Abbreviations may be used in the description of a rock. However, they will be kept at a minimum. Following are some of the abbreviations that may be used:

C	-	Coarse	Lt	-	Light	Yl	-	Yellow
Med	-	Medium	BR	-	Broken	Or	-	Orange
F	-	Fine	BL	-	Blocky	SS	-	Sandstone
V	-	Very	M	-	Massive	Sh	-	Shale
Sl	-	Slight	Br	-	Brown	LS	-	Limestone
Occ	-	Occasional	Bl	-	Black	Fgr	-	Fine-grained
Tr	-	Trace						

5.0 BORING LOGS AND DOCUMENTATION

This section describes in more detail the procedures to be used in completing boring logs in the field. Information obtained from the preceding sections will be used to complete the logs. A sample boring log is attached at the end of this SOP.

The field geologist or engineer will use this example as a guide in completing each boring log. Each boring log will be fully described by the geologist or engineer as the boring is being drilled. Every sheet

contains space for 25 feet of log. Information regarding classification details is provided either on the back of the boring log or on a separate sheet, for field use. All data will be written directly on the boring log. Additional notes may be entered in a field notebook if more space is needed.

5.1 Remarks Column

The following information will be entered under the "Remarks" column and will include, but is not limited to, the following:

- Moisture - Estimate moisture content using the following terms: dry, moist, wet, and saturated. These terms are determined by the individual. Whatever method is used to determine moisture should be consistent throughout the log.
- Angularity - Describe angularity of coarse-grained particles using the terms angular, subangular, subrounded, or rounded. Refer to ASTM D 2488 or the Earth Manual for criteria for these terms.
- Particle shape - flat, elongated, or flat and elongated.
- Maximum particle size or dimension.
- Water-level observations.
- Reaction with HCl - none, weak, or strong.

Additional comments:

- Indicate presence of mica, caving of hole, when water was encountered, difficulty in drilling, loss or gain of water.
- Indicate odor and photoionization detector (PID) readings.
- Indicate any change in lithology by drawing a line through the lithology change column and indicate the depth. This will help when cross-sections are subsequently constructed.
- At the bottom of the page, indicate type of rig, drilling method, hammer size and drop, and any other useful information (i.e., borehole size, casing set, changes in drilling method).
- Vertical lines shall be drawn in the Material Description column from the bottom of each sample to the top of the next sample to indicate consistency of material from sample to sample, if the material is consistent. Horizontal lines will be drawn if there is a change in lithology, then vertical lines will be drawn to that point.
- Indicate screened interval of well, as needed, in the lithology column. Show top and bottom of screen. Other details of well construction are provided on the well construction forms.

5.2 Rock Classification

Indicate depth at which coring began by drawing a line at the appropriate depth. Indicate core run depths by drawing coring run lines (as shown) under the first and fourth columns on the log sheet. Indicate core run number, RQD percent, and core recovery under the appropriate columns.

Indicate lithology change by drawing a line at the appropriate depth, as explained above.

Rock hardness is entered under designated column using terms as described on the back of the log or as explained earlier in this section.

Enter color as determined while the core sample is wet; if the sample is cored by air, the core is to be scraped clean before the color is described.

Enter rock type based on sedimentary, igneous, or metamorphic. For sedimentary rocks, use terms as described in Section 5.3. Again, be consistent in classification. Use modifiers and additional terms as needed. For igneous and metamorphic rock types, use terms as described in Section 5.3.

Enter brokenness of rock or degree of fracturing under the appropriate column using symbols VBR, BR, BL, or M, as explained in Section 5.3 and as noted on the back of the boring log.

The following information will be entered under the remarks column. Items will include but are not limited to the following:

- Indicate depths of joints, fractures, and breaks and also approximate to horizontal angle (such as high, low) (i.e., 70° angle from horizontal, high angle).
- Indicate calcareous zones, description of any cavities or vugs.
- Indicate any loss or gain of drill water.
- Indicate drop of drill tools or change in color of drill water.

Remarks at the bottom of boring log will include

- Type and size of core obtained
- Depth casing was set
- Type of rig used

As a final check, the boring log will include the following:

- Vertical lines will be drawn as explained for soil classification to indicate consistency of bedrock material.

- If applicable, indicate screened interval in the lithology column. Show top and bottom of screen. Other details of well construction are provided on the well construction forms.

5.3 Classification of Soil and Rock from Drill Cuttings

The previous sections describe procedures for classifying rock samples when cores are obtained. However, some drilling methods (air/mud rotary) may require classification and borehole logging based on identifying drill cuttings removed from the borehole. Such cuttings provide only general information on subsurface lithology. Some procedures that will be followed when logging cuttings are as follows:

Obtain cutting samples at approximately 5-foot intervals, sieve the cuttings (if mud rotary drilling) to obtain a cleaner sample, place the sample into a small sample bottle or ziplock bag for future reference, and label the jar or bag (i.e., hole number, depth, date, etc.). Cuttings will be closely examined to determine general lithology.

Note any change in color of drilling fluid or cuttings to estimate changes in lithology.

Note drop or chattering of drilling tools or a change in the rate of drilling to determine fracture locations or lithologic changes.

Observe loss or gain of drilling fluids or air (if air rotary methods are used) to identify potential fracture zones.

Record this and any other useful information onto the boring log.

This logging provides a general description of subsurface lithology, and adequate information can be obtained through careful observation of the drilling process. It is recommended that split-barrel and rock core sampling methods be used at selected boring locations during the field investigation to provide detailed information to supplement the less-detailed data generated through borings drilled using air and mud rotary methods.

5.4 Review

Upon completion of the borings logs, copies will be made and reviewed. Items to be reviewed include

- Checking for consistency of all logs
- Checking for conformance to the guideline
- Checking to see that all information is entered in their respective columns and spaces

Originals of the boring logs will be retained in the project files.

7.0 ATTACHMENTS

1. Boring Log

ATTACHMENT 1

BORING LOG

Tetra Tech NUS, Inc.

BORING LOG

Page ___ of ___

PROJECT NAME: _____ BORING No.: _____
PROJECT NUMBER: _____ DATE: _____
DRILLING COMPANY: _____ GEOLOGIST: _____
DRILLING RIG: _____ DRILLER: _____

Sample No. and Type or RQD	Depth (Ft.) or Run No.	Blows / 6" or RQD (%)	Sample Recovery / Sample Length	Lithology Change (Depth/Ft.) or Screened Interval	MATERIAL DESCRIPTION: Soil Density/ Consistency or Rock Hardness	Color*	Material Classification	USCS*	Remarks	PID/FID Reading (ppm): Sample	Sampler BZ	Borehole**	Driller BZ**

* When rock coring, enter rock brokeness.
** Include monitor reading in 6 foot intervals @ borehole. Increase reading frequency if elevated reponse read.

Remarks: _____

Drilling Area Background (ppm): _____

Converted to Well: Yes _____ No _____ Well I.D. #: _____

References

Deere, D.U. and Miller, R.P., (1966). Engineering Classification and Index Properties for Intact Rock, Air Force Weapons Lab. Tech. Report AFWL-TR-65-116, Kirtland Base, New Mexico.

Wentworth, C.K., 1922. A Scale of Grade and Class Terms for Caustic Sediments: Jour. Geology, v. 30, p. 377-392.

Ingram, R.L., 1954. Terminology for the Thickness of Stratification and Parting Units in Sedimentary Rocks: Geological Society of America Bulletin, v. 65. p. 937-938.

STANDARD OPERATING PROCEDURE
SOP-09

MONITORING WELL INSTALLATION

1.0 PURPOSE

This procedure provides general guidance and information pertaining to proper design and installation of ground water monitoring wells. The methods described herein are specific for monitoring well construction at Naval Support Activity (NSA) Crane. Guidelines by Southern Division, Naval Facilities Engineering Command, (South Div NAVFAC, 1997) and the State of Indiana regulatory requirements in Article 16 Water Well Drillers of Chapter 310 of the Indiana Annotated Codes (310 IAC 16) should be consulted.

2.0 RESPONSIBILITIES

Driller - The driller provides adequate and operable equipment, sufficient quantities of materials, and an experienced and efficient labor force capable of performing all phases of proper monitoring well installation and construction. The drilling contractor personnel must have all of the health and safety training required to perform the work, as specified in the Health and Safety Plan (HASP).

Field Geologist - The field geologist supervises and documents well installation and construction performed by the driller, and insures that the screen interval for each monitoring well is properly placed to provide representative groundwater data from the monitored interval. Geotechnical engineers, field technicians, or other suitable trained personnel may also serve in this capacity.

3.0 REQUIRED EQUIPMENT/ITEMS

The following list includes equipment and items required for monitoring well installation:

Health and safety equipment as required by the HASP and the Site Safety Officer.

Well drilling and installation equipment with associated materials (typically supplied by the driller).

Hydrogeologic equipment (weighted engineer's tape, water level indicator, retractable engineer’s rule, electronic calculator, clipboard, mirror and flashlight - for observing downhole activities, paint and ink

marker for marking monitoring wells, sample jars, well installation forms, boring logs, soil sample log forms, chain-of-custody records, sample coolers with ice, and a field notebook).

4.0 WELL DESIGN AND CONSTRUCTION

New wells will be installed only with Navy concurrence. Based on observations and information gathered during the drilling of each hole, the total depth of the hole and the placement of the well screen will be determined at the discretion of the field geologist or the Field Operations Leader (FOL). The decision concerning the monitored interval and well depth will be based on the following (and possibly other) information collected while the well bore is being drilled and logged:

- The specific depths where poorly-cemented sandstone units, fractured rock, or other permeable rock zones are encountered,

- The specific depths where above-average rates of ground water were brought to the surface during drilling,

- The specific depth interval where contaminants (i.e., VOCs), if any, are encountered during drilling.

All of this information will be recorded on the borehole log as the hole is drilled.

Overburden drilling followed by diamond coring (if necessary) will be performed at borehole locations. For each well, the coring will proceed to the final depth of the borehole. Once the coring has been completed and the core has been logged, then the hole will be reamed out with a 6 to 8-inch diameter air rotary bit. The air rotary equipment must have a filter on the compressed air line going to the borehole to prevent oil and other organics from being introduced. Once the hole has been completed to depth, the boring shall be cleaned out using the compressed air of the rig. Note: all drilling equipment must be decontaminated before it is placed in a borehole.

A 6-inch diameter steel isolation casing will be installed and pressure grouted in the deep wells to seal the upper groundwater from deep groundwater. The grout will be allowed to cure for a minimum of 24 hours before resuming coring and reaming to the total depth of the borehole.

All monitoring wells will be constructed of schedule-40, flush-joint threaded, 2-inch inside diameter (ID) polyvinyl chloride (PVC) riser pipe and flush joint threaded, factory slotted well screen with a threaded end cap. The well screens will be factory slotted to 0.020-inch size. Each section of well casing and screen shall be National Sanitation Foundation (NSF) approved. Well screens will be 10-feet long, but

may be longer or shorter based on the subsurface conditions encountered. A PVC cap will be placed on the bottom and will also be flush-threaded. Thermoplastic pipe shall comply with ASTM F-480 (1981). Other means of joining casings using glue, gaskets, pop rivets or screws are not allowed. The screen shall pass no more than 10 percent of the pack material, or in-situ aquifer material.

Monitoring wells will be installed immediately upon completion of drilling. A well screen section with bottom cap and the proper amount of riser pipe will be assembled and lowered down the borehole. Spacers may be used to ensure that the casing and screen are centered and are aligned straight. Clean silica sand pack will be installed through the borehole. The sand pack will be extended from 0.5 feet below the well screen to 2.0 feet above the top of the well screen. Clean silica sand of U.S. Standard Sieve Size No. 20 to 40 will be used.

A minimum 2-foot thick bentonite pellet seal will be installed above the filter pack and allowed to hydrate as determined by field geologist before grout is added above the seal. Only 100-percent, certified pure, sodium bentonite will be used for well construction. The depths of backfill materials will be constantly monitored during well installation using a weighted stainless steel or fiberglass tape measure.

The remaining annulus above the hydrated bentonite seal will be backfilled to the surface using a tremie pipe, with a 20:1 cement/bentonite grout. A maximum of 10 gallons of water per 94-pound bag of Type-1 cement will be used. The grout mixture should be blended in an above-ground rigid container or mixer to produce a thick lump-free mixture.

Bentonite expands by absorbing water and provides a seal between the screened interval and the overlying portion of the annular space and formation. Cement-bentonite grout is placed on top of the bentonite pellets extending to the surface. The grout effectively seals the well and eliminates the possibility for surface infiltration reaching the screened interval. Grouting also replaces material removed during drilling and prevents hole collapse and subsidence around the well. A tremie pipe should be used to introduce grout from the bottom of the hole upward, to prevent bridging, and to provide a better seal. However, in shallow boreholes that don't collapse, it may be more practical to pour the grout from the surface without a tremie pipe.

When the well is completed and grouted to the surface, a protective steel surface casing is placed over the top of the well. The finished well casing shall extend at least 2 ft above the ground level. This casing will have a cap that will be locked to prevent vandalism. A vent hole shall be provided in the cap to allow venting of gases and maintain atmospheric pressure as water levels rise or fall in the well. The protective casing has a larger diameter than the riser pipe and is set into the wet cement grout over the riser upon completion. In addition, one hole is drilled just above the cement collar through the protective casing

which acts as a weep hole for the flow of water which may enter the annulus during well development, purging, or sampling.

Four barrier posts shall be placed at the corner of a 3 foot by 3 foot by 6 inch thick concrete pad located at the ground surface.

5.0 DOCUMENTATION OF FIELD ACTIVITIES

A critical part of monitoring well installation is recording of significant details and events in the site logbook, on field forms, and a field logbook.

All installed wells must be registered with the NSA Crane Environmental Protection Department. The following information must be supplied to NSA Crane for each well as soon as this information is known:

- Tag number
- Installation Name (i.e., NSA Crane)
- Contract Task Order number (CTO F27H)
- TtNUS project number
- Well identification number
- Date installed
- Installer (i.e., TtNUS)
- Total well depth
- Screened interval
- Elevation (Top of casing)
- Northing coordinate (ft)
- Easting coordinate (ft)
- Survey coordinate reference system
- Information point of contact.

6.0 ATTACHMENTS

1. Bedrock Monitoring Well Sheet
2. Overburden Monitoring Well Sheet

ATTACHMENT 1

BEDROCK MONITORING WELL SHEET

BEDROCK
MONITORING WELL SHEET

WELL No.: _____
PERMIT No:

PROJECT:		DRILLING Co.:		BORING No.:	
PROJECT No.:		DRILLER:		DATE COMPLETED:	
SITE:		DRILLING METHOD:		NORTHING:	
GEOLOGIST:		DEV. METHOD:		EASTING:	

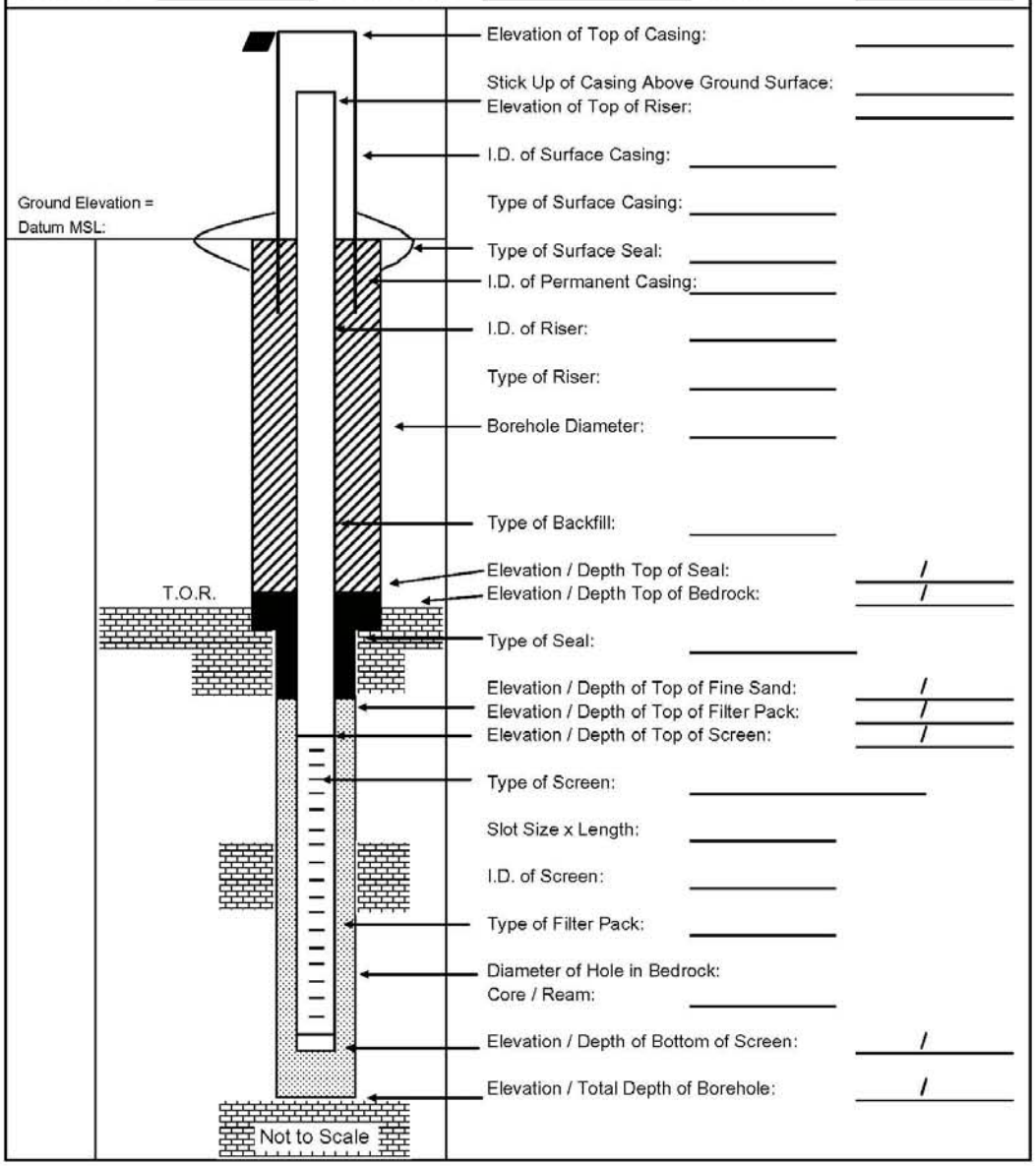

Elevation of Top of Casing: _____

Stick Up of Casing Above Ground Surface: _____
Elevation of Top of Riser: _____

I.D. of Surface Casing: _____

Type of Surface Casing: _____

Type of Surface Seal: _____

I.D. of Permanent Casing: _____

I.D. of Riser: _____

Type of Riser: _____

Borehole Diameter: _____

Type of Backfill: _____

Elevation / Depth Top of Seal: _____ / _____
Elevation / Depth Top of Bedrock: _____ / _____

Type of Seal: _____

Elevation / Depth of Top of Fine Sand: _____ / _____
Elevation / Depth of Top of Filter Pack: _____ / _____
Elevation / Depth of Top of Screen: _____ / _____

Type of Screen: _____

Slot Size x Length: _____

I.D. of Screen: _____

Type of Filter Pack: _____

Diameter of Hole in Bedrock:
Core / Ream: _____

Elevation / Depth of Bottom of Screen: _____ / _____

Elevation / Total Depth of Borehole: _____ / _____

ATTACHMENT 2

OVERBURDEN MONITORING WELL SHEET

BORING NO.: _____

OVERBURDEN MONITORING WELL SHEET

PROJECT:		DRILLING Co.:		BORING No.:	
PROJECT No.:		DRILLER:		DATE COMPLETED:	
SITE:		DRILLING METHOD:		NORTHING:	
GEOLOGIST:		DEV. METHOD:		EASTING:	

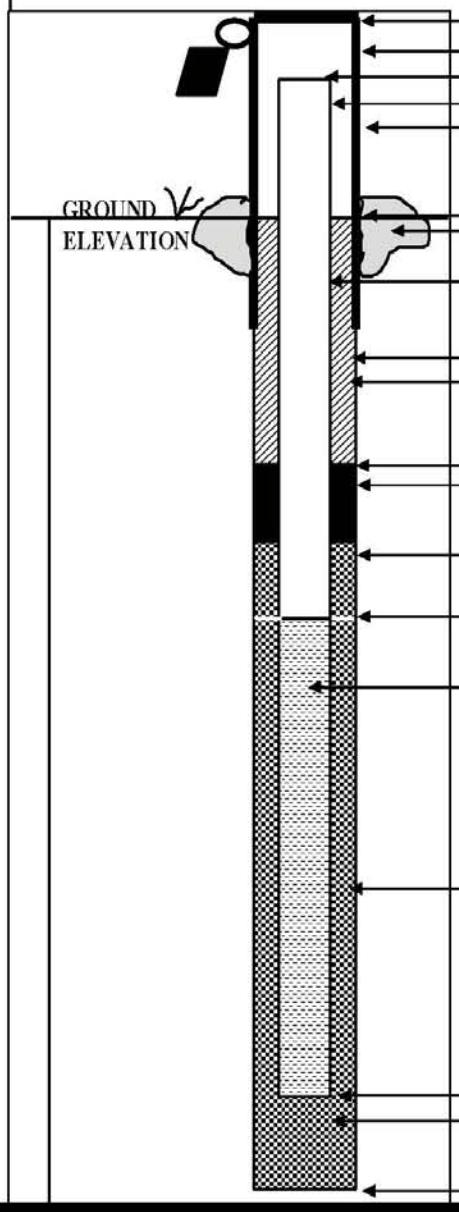

ELEVATION OF TOP OF SURFACE CASING: _____
STICK -UP TOP OF SURFACE CASING: _____
ELEVATION OF TOP OF RISER PIPE: _____
RISER STICK-UP ABOVE GROUND SURFACE: _____
I.D. OF SURFACE CASING: _____
TYPE OF SURFACE CASING: _____

GROUND ELEVATION: _____
TYPE OF SURFACE SEAL: _____

RISER PIPE I.D.: _____
TYPE OF RISER PIPE: _____

BOREHOLE DIAMETER: _____
TYPE OF SEAL: _____

ELEVATION / DEPTH OF SEAL: _____ / _____
TYPE OF SEAL: _____

ELEVATION / DEPTH TOP OF FILTER PACK: _____ / _____

ELEVATION / DEPTH TOP OF SCREEN: _____ / _____

TYPE OF SCREEN: _____

SLOT SIZE X LENGTH: _____

I.D. OF SCREEN: _____

TYPE OF FILTER PACK: _____

ELEVATION / DEPTH BOTTOM OF SCREEN: _____ / _____
ELEVATION / DEPTH BOTTOM OF FILTER PACK: _____ / _____
TYPE OF BACKFILL BELOW WELL: _____
ELEVATION / DEPTH OF BOREHOLE: _____ / _____

STANDARD OPERATING PROCEDURE
SOP-10

MONITORING WELL DEVELOPMENT

1.0 PURPOSE

This procedure provides general guidance and information pertaining to proper development of new and existing monitoring wells. The methods described herein are specific for monitoring wells located at Naval Support Activity (NSA) Crane. Guidelines by Southern Division, Naval Facilities Engineering Command, (South Div NAVFAC, 1997) and the State of Indiana regulatory requirements in Article 16 Water Well Drillers of Chapter 310 of the Indiana Annotated Codes (310 IAC 16) should be consulted.

2.0 RESPONSIBILITIES

The drilling contractor will provide adequate and operable equipment, sufficient quantities of materials, and an experienced and efficient labor force capable of performing the development of monitoring wells. The drilling contractor personnel must have all of the health and safety training required to perform the work, as specified in the Health and Safety Plan (HASP).

3.0 REQUIRED EQUIPMENT/ITEMS

The following list includes equipment and items required for monitoring well installation:

Health and safety equipment as required by the HASP and the Site Safety Officer.

Well development equipment with associated materials (typically supplied by the driller).

Hydrogeologic equipment (weighted engineer's tape, water level indicator, retractable engineers rule, electronic calculator, clipboard, mirror and flashlight - for observing downhole activities, paint and ink marker for marking monitoring wells, sample jars, well installation forms, and a field notebook).

4.0 WELL DEVELOPMENT METHODS

The development of new wells shall not occur until at least 24 hours after the well has been installed and grouted. This time is required so that the grout in the annulus can set and harden. The purpose of well

development is to stabilize and increase the permeability of the sand pack and the well screen, and to restore the permeability of the formation which may have been reduced by drilling operations. Wells are typically developed until all fine material and drilling water, if any, is removed from the well.

Sequential measurements of pH, specific conductance, turbidity, and temperature will be taken during development. Development should proceed until criteria are met as stated in Navy Guidelines.

Vigorous on-and-off pumping or a surge block will be used for development.

A surge block that is approximately the same diameter as the well riser will be used to agitate the water, causing it to move in and out of the screens. This movement of water pulls fine materials into the well, where they may be removed by any of several methods, and prevents bridging of sand particles in the gravel pack. There are two basic types of surge plungers; solid and valved surge plungers. Site-specific conditions will dictate which type will be used. In formations with low yields, a valved surge plunger may be preferred, as solid plungers tend to force water out of the well at a greater rate than it will flow back in. Valved plungers are designed to produce a greater inflow than outflow of water during surging.

Development should proceed until three consecutive pH, specific conductance, and temperature readings are within 10 percent of each other and three consecutive turbidity readings are within 5 Nephelometric Turbidity Units (NTUs) of each other. If these criteria cannot be met after five volumes of water have been removed, then one additional well volume will be removed and well development will be considered complete.

If for any reason the above criteria cannot be met, the site geologist should document the event in writing and consult with the TtNUS Project Manager (PM) regarding an alternate plan of action.

Well development must be completed at least 24 hours before well sampling. The intent of this hiatus is to provide time for the newly installed well and backfill materials to sufficiently equilibrate to their new environment and for that new environment to re-stabilize after the disturbance of drilling.

5.0 ATTACHMENTS

1. Monitoring Well Development Record

ATTACHMENT 1
MONITORING WELL DEVELOPMENT RECORD

MONITORING WELL DEVELOPMENT RECORD

Page ___ of _____

Well: _____ Depth to Bottom (ft.): _____ Responsible Personnel: _____
Site: _____ Static Water Level Before (ft.): _____ Drilling Co.: _____
Date Installed: _____ Static Water Level After (ft.): _____ Project Name: _____
Date Developed: _____ Screen Length (ft.): _____ Project Number: _____
Dev. Method: _____ Specific Capacity: _____
Pump Type: _____ Casing ID (in.): _____

Time	Estimated Sediment Thickness (Ft.)	Cumulative Water Volume (Gal.)	Water Level Readings (Ft. below TOC)	Temperature (Degrees C)	pH	Specific Conductance (Units _____)	Turbidity (NTU)	Remarks (odor, color, etc.)

STANDARD OPERATING PROCEDURE

SOP-11

MEASUREMENT OF WATER LEVELS

1.0 PURPOSE

This Standard Operating Procedure (SOP) establishes procedures for determining water levels in monitoring wells.

2.0 REQUIRED FIELD FORMS AND EQUIPMENT

The following equipment and field forms are required for determining water levels in monitoring wells.

Ground Water Level Measurement Form: A copy of the Ground Water Level Measurement Form is attached.

Bound Field Log Book

Photoionization Detector (PID)

Well Key

Electronic Water-Level Indicator: The water level indicator must have a cable of sufficient length to reach the water surface and be capable of measurements of 0.01 feet.

Decontamination Supplies

3.0 WATER-LEVEL MEASUREMENT PROCEDURES

3.1 Check the operation of the electronic water level indicator or interface meter.

3.2 Record the well identification (ID), date, and time (using military time) on the Ground Water-Level Measurement Form.

3.3 Unlock the well and remove the well cap.

3.4 Place the well cap on a clean piece of plastic.

3.5 Check the well for the presence of organic vapors in the 2-inch PVC riser pipe as follows:

1. Calibration of the PID shall be done in accordance with appropriate calibration procedures.

2. Insert the PID sample inlet straw approximately three inches into the riser pipe.

3. Record the PID reading on the Ground Water Level Measurement Form. If the reading is less than concentrations specified in the site-specific Health and Safety Plan (HASP), proceed to step 3.6. If the reading is greater than the concentration specified in the HASP, measure the concentration in the breathing zone. If the concentration in the breathing zone is less than the concentration specified in the HASP, proceed to Step 3.6. If the reading is greater than the specified concentration, allow the riser pipe to ventilate for ten minutes and repeat the measurement of breathing zone concentrations until the concentrations fall below the level specified in the HASP before proceeding to step 3.6.

3.6 Ensure that the water level indicator probe has been decontaminated before use.

3.7 Slowly lower the probe into the well riser pipe (or into the surface water for staff gages) until an audible and/or visible signal is produced, indicating contact with the water surface.

3.8 Read the water level measurement from the top of the inner casing (or from the staff gage reference point) at the surveyed reference point to the nearest 0.01-foot.

3.9 Record the water level measurement on the Water Level Measurement Form.

3.10 Wind the meter cable measuring tape back onto the spool.

3.11 Replace the well cap and lock.

3.12 Decontaminate the meter's probe and cable.

4.0 ATTACHMENTS

1. Water Level Measurement Sheet

ATTACHMENT 1

WATER LEVEL MEASUREMENT SHEET

WATER LEVEL MEASUREMENT SHEET

Project Name: _____ **Project No.:** _____
Location: _____ **Personnel:** _____
Weather Conditions: _____ **Measuring Device:** _____
Tidally Influenced: Yes ___ No ___ **Remarks:** _____

Well or Piezometer Number	Date	Time	Elevation of Reference Point (feet)*	Total Well Depth (feet)*	Water Level Indicator Reading (feet)*	Thickness of Free Product (feet)*	Groundwater Elevation (feet)*	Comments

STANDARD OPERATING PROCEDURE

SOP-12

LOW-FLOW WELL PURGING AND STABILIZATION

1.0 PURPOSE

This Standard Operating Procedure (SOP) establishes the procedure for well purging and stabilization utilizing low-flow techniques.

2.0 REQUIRED FIELD FORMS AND EQUIPMENT

The following field forms and equipment are required for low-flow purging.

Low-Flow Purge Data Sheet: A copy of this form is attached at the end of this SOP.

Ground Water Sample Log Sheet: A copy of this form and instructions for its completion are included in SOP-13.

Bound Field Log Book

Well key

Electronic water level indicator: The water level indicator must have a cable of sufficient length to reach the water surface and be capable of measurements of 0.01-feet.

Electronic Programmable Controller, model 400 or comparable: This controller regulates air flow in a bladder pump.

Cylinder of compressed nitrogen with regulator: Compressed gas serves as the power source for the bladder pump.

Multiple parameter water quality meter: This unit measures and displays field parameters measured in the field including pH, dissolved oxygen, oxidation-reduction potential (ORP), temperature, and specific conductance.

Flow-through cell adapter for water quality meter

LaMotte Turbidity Meter or comparable: Used to measure turbidity.

Purge water containers

Graduated cylinder and stopwatch: Used to calculate flow rate.

3.0 PROCEDURES FOR WELL PURGING

3.1 Prior to mobilizing to the site, clean, check for proper operation, and calibrate as per manufacturer requirements above equipment as necessary.

3.2 Obtain a static water level measurement of the well to be purged. Record the information on the Ground Water Sample Log Sheet and the Low-Flow Purge Data Sheet. Leave the water level meter suspended in the well casing.

3.3 Calculate one well casing volume as follows:

1. Obtain the total depth of the well.

2. Using the static water level determined in Step 3.2 of this SOP and the total depth of the well, calculate the well casing volume using the following formula:

$$\mathbf{V = (0.163)(T)(r^2)}$$

where:

V	=	Static casing volume of well (in gallons).
T	=	Vertical height of water column (linear feet of water).
0.163	=	A constant conversion factor which compensates for the conversion of the casing radius from inches to feet, the conversion of cubic feet to gallons, and pi.
r	=	Inside radius of the well casing (in inches).

Note: For wells of 1-inch radius (2-inch diameter) V = 0.163 gallons per foot of water column.

3.4 Connect the pump controller to the well pump air supply (at the well cap) by following the instructions in the pump control manual. The pump controller must be turned off when being connected.

3.5 Connect the nitrogen cylinder to the pump controller. The nitrogen cylinder valve must be closed and the regulator line pressure set at zero pounds per square inch (PSI) when being connected.

3.6 Following the instructions found in the water quality meter manual, connect the flow-through cell to the pump discharge line (at the well cap).

3.7 Place the discharge tubing from the flow-through cell to direct the purge water discharge into the graduated cylinder or purge-water container.

3.8 Following the instructions in the pump controller manual, start pumping water from the well.

3.9 Start with the initial pump rate set at approximately 0.1 liters/minute. Use the graduated cylinder and stopwatch to measure the pumping rate. Adjust pumping rates as necessary to prevent drawdown from exceeding 0.3 feet during purging. If no drawdown is noted, the pump rate may be increased (to a max of 0.4 liters/minute) to expedite the purging and sampling event. The pump rate will be reduced if turbidity is greater than 10 Nephelometric Turbidity Units (NTUs) after all other field parameters have stabilized. If ground water is drawn down below the top of the well screen, purging will cease and the well will be allowed to recover before purging continues. Slow recovering wells will be identified and purged at the beginning of the workday. If possible, samples will be collected from these wells within the same 8-hour workday and no later than 24 hours after the start of purging.

The time to sample any given well will vary greatly due to the many variables associated with low flow purging and sampling, such as:

- Stabilization of parameters
- Possible draw down
- Analytical changes from quarter to quarter
- Varying QA sample requirements from quarter to quarter
- Variable pump rates

Normally, the time from the start of purging to the end of sampling will be between 1 to 4 hours.

3.10 Measure the well water level using the water level meter every five to ten minutes. Record the well water level on the Low-Flow Purge Data Form (attached at the end of this SOP).

3.11 Record on the Low-Flow Purge Data Form every five to ten minutes the water quality parameters (pH, specific conductance, temperature, turbidity, oxidation-reduction potential, and dissolved oxygen) measured by the water quality meter and turbidity meter. If the cell needs to be cleaned

during purging operations, continue pumping (allow the pump to discharge into a container) and disconnect the cell. Rinse the cell with distilled water. After cleaning is completed, reconnect the flow-through cell and continue purging. Document the cell cleaning on the Low-Flow Purge Data Form.

3.12 Measure the flow rate using a graduated cylinder. Remeasure the flow rate any time the pump rate is adjusted.

3.13 During purging, check for the presence of bubbles in the flow-through cell. The presence of bubbles is an indication that connections are not tight. If bubbles are observed, check for loose connections.

3.14 Stabilization is achieved and sampling can begin when a minimum of one casing volume has been removed and three consecutive readings, taken at 5 to 10 minute intervals, are within the following limits:

pH $\pm$ 0.1 standard units
Specific conductance $\pm$ 3%
Temperature $\pm$ 1.0 ºC
Turbidity less than 10 NTUs

If the above conditions have still not been met after the well has been purged for four hours, purging will be considered complete and sampling can begin. Record the final well stabilization parameters from the Low-Flow Purge Data From onto the Ground Water Sample Log Form.

If there is a need to leave a well during purging, there are two options:

- One, if the sampler must move for 30 minutes or less but still has a clear line of sight to the well, the sampler may leave the pump running and watch the well until the sampler is able to return to the well.

- Two, if for whatever reason, the sampler must stop purging for an extended period of time or a clear line of sight cannot be maintained, the pump and cell will be shut-down. All equipment and supplies will be loaded into the sample vehicle, and the well will be secured before departing.

In both cases, the time purging was stopped and restarted will be noted on the Low-Flow Purge Data Form.

3.15 Once sampling activities have been completed, turn the pump off. Remove pump, hoses, cables, and other equipment from the well.

3.16 Decontaminate pumps, hoses, cables, flow-through cell, and other equipment.

4.0 ATTACHMENTS

1. Low-Flow Purge Data Sheet

ATTACHMENT 1

LOW-FLOW PURGE DATA SHEET

LOW FLOW PURGE DATA SHEET

PROJECT SITE NAME: _____ **WELL ID.:** _____

PROJECT NUMBER: _____ **DATE:** _____

Time (Hrs.)	Water Level (Ft. below TOC)	Flow (mL/Min.)	pH (S.U.)	Cond. (mS/cm)	Turb. (NTU)	DO (mg/L)	Temp. (Celcius)	ORP mV	Comments

SIGNATURE(S): _____ **PAGE___OF___**

STANDARD OPERATING PROCEDURE
SOP-13

MONITORING WELL SAMPLING

1.0 PURPOSE

This Standard Operating Procedure (SOP) establishes the procedure for monitoring well sampling. Low-flow sampling techniques will be used for ground water sampling at Naval Support Activity (NSA) Crane.

2.0 REQUIRED FIELD FORMS AND EQUIPMENT

The following field forms and equipment are required for low-flow sampling of monitoring wells:

Ground Water Sample Log Form: A copy of this form is attached at the end of this SOP.

Bound field log book

Chain-of-Custody Form

Bladder Pump

Surgical Gloves

Labeled sample containers: Sample containers are certified clean by the laboratory supplying the sample containers.

Tag for each sample container

Plastic storage bags

Shipping containers with ice

3.0 MONITORING WELL SAMPLING PROCEDURES

3.1 Ground water sampling may be initiated when the monitoring well has been purged and stabilized.

3.2 Record the sample start time (using military time) on the Ground Water Sample Log Sheet. Record the field measurements for pH, oxidation-reduction potential (ORP), specific conductance, temperature, dissolved oxygen, and turbidity.

3.3 With the pump continuing to run, disconnect the flow-through cell from the pump discharge tube and immediately start filling sample bottles directly from the pump discharge. All sample

containers will be supplied by the laboratory, and the laboratory will pre-preserve all sample containers, where appropriate.

3.4 Allow the pump discharge to flow gently down the inside of the container with minimal turbulence when filling sample containers. Avoid immersing the discharge tube into the sample as the sample container is being filled. Sample containers for volatile organic compounds (VOCs) must be completely filled so that no headspace exists in the container. The VOC vials shall be filled to the top so that a convex meniscus is formed. Gently secure the cap, turn the vial upside down, and check to see if any air has been trapped inside the vial. If so, open the cap, reform the meniscus, and attempt again to secure the lid without trapping air in the sample. All other sample containers can have air space included when the container lid is secured.

3.5 Cap each container immediately after filling.

3.6 Record the sample time on the Ground Water Sample Log Form, the sample tag, and on the sample label.

3.7 Secure the associated tag to each sample container.

3.8 Place the tagged sample container into a plastic storage bag and then into a cooler containing ice.

3.9 Enter the proper information on the Chain-of-Custody form for each sample container.

3.10 Repeat steps 3.3 through 3.9 for each sample container collected.

3.11 The pump rate should not be adjusted after sampling has commenced. If it becomes necessary to adjust the pump rate, document the change on the Ground Water Sample Log Form.

3.12 All samples will be collected into pre-preserved bottles (if required) supplied by an approved laboratory. All samples will be collected in the following sequence (where applicable):

Volatile Organic Compounds (VOCs)
Appendix IX Metals

3.13 If the last turbidity measurement prior to the commencement of sampling showed turbidity to be greater than 5 Nephelometric Turbidity Units (NTUs), then filtered aliquots of ground water will be collected and analyzed for dissolved metals and dissolved thorium isotopes. Without turning off the pump, attach a disposable, inline, 0.45-um filter cartridge at the end of the discharge tube. Fill sample containers marked for "dissolved metals" so that the laboratory knows that these aliquots are distinct sample fractions and that the results should be reported as dissolved analytes. Samples scheduled for VOC analysis shall not be filtered.

3.14 Repeat steps 3.5 through 3.9 for the filtered sample containers.

3.15 After completion of sample collection, remove the bladder pump from well and decontaminate.

3.16 Replace the outer protective well cap and lock the well.

3.17 All equipment should be cleaned and packed into the sample vehicle, along with the sample cooler for transport. Disposable gloves and other equipment should be placed in a plastic trash bag and handled as investigation derived waste.

4.0 ATTACHMENTS

1. Ground Water Sample Log Sheet

ATTACHMENT 1

GROUND WATER SAMPLE LOG SHEET

GROUND WATER SAMPLE LOG SHEET

Page___ of ___

Project Site Name: _____
Project No.: _____

[] Domestic Well Data
[] Monitoring Well Data
[] Other Well Type: _____
[] QA Sample Type: _____

Sample ID No.: _____
Sample Location: _____
Sampled By: _____
C.O.C. No.: _____
Type of Sample:
[] Low Concentration
[] High Concentration

SAMPLING DATA:

Date:	Color	pH	S.C.	Temp.	Turbidity	DO	TBD	TBD
Time:	Visual	Standard	mS/cm	^{0}C	NTU	mg/l		
Method:								

PURGE DATA:

Date:	Volume	pH	S.C.	Temp. (C)	Turbidity	DO	TBD	TBD
Method:								
Monitor Reading (ppm):								
Well Casing Diameter & Material								
Type:								
Total Well Depth (TD):								
Static Water Level (WL):								
One Casing Volume(gal/L):								
Start Purge (hrs):								
End Purge (hrs):								
Total Purge Time (min):								
Total Vol. Purged (gal/L):								

SAMPLE COLLECTION INFORMATION:

Analysis	Preservative	Container Requirements	Collected

OBSERVATIONS / NOTES:

Circle if Applicable:

MS/MSD	Duplicate ID No.:

Signature(s):

STANDARD OPERATING PROCEDURE

SOP-14

CALIBRATION AND CARE OF WATER QUALITY METERS

1.0 PURPOSE

This Standard Operating Procedure (SOP) establishes the procedures for the calibration and maintenance of field instruments used to measure water quality and for the proper documentation of calibration and maintenance. The YSI 600-Series Environmental Monitoring System or the Horiba U20–Series multi-parameter water quality monitoring system will be used to measure pH, temperature, oxidation-reduction potential (ORP), specific conductance (SC), and dissolved oxygen (DO) in water. A LaMotte turbidity meter will be used in conjunction with the water quality meter to measure turbidity. The water quality meter will have a multiprobe sensor that can be used in conjunction with a flow-through cell attached to a pump discharge tube to measure water-quality parameters in a ground water discharge or can be immersed in a surface water body such as a stream, pond, or drainage ditch. The LaMotte is a hand held meter that uses a multi-detector optical configuration to assure long term stability and minimize stray light and color interferences. All comparable equipment used in place of the equipment items identified in Section 2.0 below must be comparable in terms of sensitivity, accuracy, and precision.

2.0 FIELD FORMS AND EQUIPMENT LIST

The following logbooks, forms, equipment, and supplies are required:

Site logbook
Equipment calibration log sheet
YSI Model 600 Series and Sonde or Horiba U20 Series, or comparable: multi-parameter water-quality meter with flow through cell.
LaMotte Turbidity Meter, or comparable
Equipment manual
Calibration kit
Deionized water, paper towels, spray bottle, etc.
Disposable medical-grade gloves (e.g., latex, nitrile)

3.0 PROCEDURES

This section describes the calibration procedures for the YSI Model 600 series, the Horiba U20 series, and the LaMotte. Each meter is supplied with an instruction manual and will be on site and will be used as the calibration guidance documents. These procedures will list requirements for frequency of calibration and checks to be performed on the meter.

3.1 YSI Model 600 Series and Horiba U20 Series

The YSI Model 600 series and Sonde and the Horiba U20 series are multi-parameter, water-quality meters that may be used to measure open water bodies (streams, ponds, springs, etc.) with the probe guard installed. With the flow through cell attached, the meters have the ability to measure water-quality parameters in ground water via a pump discharge line. By performing the measurements in the discharge line coming directly from the well, the parameters are measured before the ground water comes in contact with the atmosphere. The parameters measured by the YSI or the Horiba for this field effort are as follows:

- DO
- SC
- Temperature
- pH
- ORP
- Turbidity

3.1.1 Documentation

The Equipment Calibration Log is used to document calibration of measuring equipment used in the field. The Equipment Calibration Log documents that the manufacturer's instructions were followed for calibration of the equipment, including the frequency of calibration, type of standards used, and checks performed on calibration during the course of using the equipment. An Equipment Calibration Log must be maintained for each measuring device that requires calibration. Entries must be made for each day the equipment is used. A blank Equipment Calibration Log form is attached at the end of this SOP.

3.1.2 Calibration

All the parameters listed in Section 3.0 must be calibrated prior to the start of each field effort. After this initial calibration, the meter will be checked each day that it is used. If the check shows any out-of-specification readings, the specific probe will be recalibrated. Meter specifications can be found in the equipment manual, starting on page 248 (YSI) or page 93 (Horiba). Calibration and calibration checks will be documented in the field logbook and on the Equipment Calibration Log. The name, lot number, and expiration date for all calibration buffers and standards used will be recorded on the Equipment Calibration Log. The meter's model, serial number, and name of rental company will also be recorded on the equipment calibration form.

3.1.3 Tips for Good Calibration

- The DO calibration is a water-saturated air calibration. Make certain to loosen the calibration cup seal to allow pressure to equilibrate before calibrating.

- Make certain that sensors are completely submersed in solution and readings are stable when calibration values are entered.

- Use a small amount of calibration solution (previously used solution may be used, then discarded for this purpose) to pre-rinse the sonde.

- Fill a bucket with ambient temperature water to rinse the sonde between calibration solutions.

- Make sure to rinse and dry the probe between calibration solutions. This will reduce carry-over contamination and increase the accuracy of the calibration.

3.2 <u>Lamotte Turbidity Meter</u>

The Lamotte turbidity meter is a hand held meter that measures the amount of suspended matter in water using the Nephelometric method.

3.2.1 <u>Documentation</u>

The Equipment Calibration Log is used to document calibration of measuring equipment used in the field. The Equipment Calibration Log documents that the manufacturer's instructions were followed for calibration of the equipment, including the frequency of calibration, type of standards used, and checks

performed on calibration during the course of using the equipment. An Equipment Calibration Log must be maintained for each measuring device that requires calibration. Entries must be made for each day the equipment is used. A blank Equipment Calibration Log form is attached at the end of this SOP.

3.2.2 Calibration

Turbidity must be calibrated prior to the start of each field effort. After this initial calibration, the LaMotte will be calibrated each day that it is used. If the check shows any out-of-specification readings, the meter will be recalibrated. Meter specifications can be found in the equipment manual. Calibration and calibration checks will be documented in the field logbook and on the Equipment Calibration Log. The name, lot number, and expiration date for all calibration standards used will be recorded on the Equipment Calibration Log. The meter's model, serial number, and name of rental company will also be recorded on the equipment calibration form.

3.2.2 Tips for Good Calibration

- Thoroughly clean the standard vial with a chem wipe to remove finger prints.

- Make sure that the vial is properly aligned according the manual recommendations.

4.0 MAINTENANCE

The YSI and/or Horiba Meter and LaMotte will be rented for the duration of each brief field effort. Therefore, little field maintenance will be required. For any maintenance other than the routine cleaning, calibrating, or battery charging, the instrument should be returned to the vendor and a replacement sent immediately to the job site.

4.1 Meter Storage for the YSI and Horiba

For this field effort, the meter storage will be short term, [i.e. over night or between work shifts (4-day break)]. During these breaks, the meter will be charged. One-half inch of tap or distilled water will be placed in the meter calibration cup and the cup threaded onto the sonde. The key for short-term storage of probes is to use a minimal amount of water so the calibration cup will remain at 100 percent humidity. The water level must be low enough so that none of the probes are actually immersed. Proper storage of the sonde between usage will extend its life and will also ensure that the unit is ready for use as quickly as possible for the next application.

Multi-parameter short term storage key points:

- Use enough water to provide humidity but not enough to cover the probe surfaces.
- Make sure the storage vessel is sealed to minimize evaporation.
- Check periodically to make certain that water is still present.

4.2 Probe Cleaning

- Rinse the probe thoroughly with potable water.
- Wash the probe in a mild solution of Liquinox and water and wipe with paper towels and/or cotton swabs.
- Rinse and soak the probe in deionized water.
- If stronger cleaning is required, consult Section 2.10 on page 89 (YSI) or Section 7.1 on page 86 (Horiba) of the equipment manual.

Note: Reagents that are used to calibrate and check the water quality meter may be hazardous. Review the health and safety plan and Material Safety Data Sheets (MSDSs), all of which are on file in the field trailer.

4.3 Meter Storage for the LaMotte

For this field effort, the meter storage will be short term, [i.e. over night or between work shifts (4-day break)]. Proper storage of the meter between usage will extend its life and will also ensure that the unit is ready for use as quickly as possible for the next application.

Short term storage key points:

- Make sure the storage vessel is moisture free and sealed.

4.4 Sample Vial Cleaning

- Rinse the vial thoroughly with potable water to remove sediments.
- Wipe with chem.-wipes or cotton swabs.

5.0 ATTACHMENTS

1. Equipment Calibration Log

ATTACHMENT 1
EQUIPMENT CALIBRATION LOG

EQUIPMENT CALIBRATION LOG

PROJECT NAME : _____ INSTRUMENT NAME/MODEL: _____

SITE NAME: _____ MANUFACTURER: _____

PROJECT No.: _____ SERIAL NUMBER: _____

Date of Calibration	Instrument I.D. Number	Person Performing Calibration	Instrument Settings		Instrument Readings		Calibration Standard (Lot No.)	Remarks and Comments
			Pre-calibration	Post-calibration	Pre-calibration	Post-calibration		

APPENDIX B

Laboratory Standard Operating Procedures

APPENDIX B
LAB STANDARD OPERATING PROCEDURES
TABLE OF CONTENTS

Empirical Laboratories

Empirical Laboratories DoD Certificate of Accreditation
SOP-100 Metals Digestion/Preparation
SOP-103 Mercury Analysis in Water
SOP-105 Metals
SOP-201 SVOCs and Low-Concentration PAHs
SOP-202 VOCs Aqueous
SOP-300 SVOCs Aqueous
QS10-R14 Sample Receiving, Storage, and Login
QS14-R06 Waste Disposal

LABORATORY ACCREDITATION BUREAU

Certificate of Accreditation

ISO/IEC 17025:2005 ***Certificate Number L2226***

Empirical Laboratories, LLC

621 Mainstream Drive, Suite 270
Nashville, TN 37228

has met the requirements set forth in L-A-B's policies and procedures, all requirements of ISO/IEC 17025:2005 "General Requirements for the competence of Testing and Calibration Laboratories" and the U.S. Department of Defense Environmental Laboratory Accreditation Program (DoD ELAP).*

The accredited lab has demonstrated technical competence to a defined "Scope of Accreditation" and the operation of a laboratory quality management system (refer to joint ISO-ILAC-IAF Communiqué dated 8 January 2009).

Accreditation Granted through: November 30, 2012

R. Douglas Leonard, Jr., Managing Director
Laboratory Accreditation Bureau
Presented the 30th of November 2009

*See the laboratory's Scope of Accreditation for details of the DoD ELAP requirements
Laboratory Accreditation Bureau is found to be in compliance with ISO/IEC 17011:2004 and recognized by ILAC (International Laboratory Accreditation Cooperation) and NACLA (National Cooperation for Laboratory Accreditation).

EMPIRICAL LABORATORIES, LLC
STANDARD OPERATING PROCEDURE

INORGANICS: SOP100 REVISION #: 21 EFFECTIVE DATE: 20100901

METALS DIGESTION/PREPARATION

References:

Methods 3005A/USEPA CLPILM0 4.1 Aqueous, 3010A, 3030C, 3050B
USEPA CLPILM0 4.1 (Soil/Sediment), 200.7, Standard Methods 3030C 21st
See Addendum for USEPA CLPILM 05.2 (Aqueous & Soil/Sediment)

APPROVALS:

Lab Director: _____ Date: 9/8/10

Data Quality Manager: _____ Date: 9/8/10

Section Supervisor: _____ Date: 9/9/10

Changes Summary

Revision 21, 9/1/10

- The SOP is an update from Revision 20 dated 04/27/10
- The SOP has been found to be up-to-date with Standard Methods 21st edition.
- Reference to adjusting filtrate volume for method 3030C has been removed.
- References to bound logbooks have been replaced with LIMS references.

Revision 20, 4/27/10

- The SOP is an update from Revision 19 dated 04/20/09.
- References to oil sample preparation have been removed.
- Extraction volumes for TCLP have been updated.

METALS DIGESTION/PREPARATION

References:
Methods 3005A/USEPA CLPILM0 4.1 Aqueous, 3010A, 3030C, 3050B
USEPA CLPILM0 4.1 (Soil/Sediment), 200.7, Standard Methods 3030C
See Addendum for USEPA CLPILM 05.2 (Aqueous & Soil/Sediment)

I. SCOPE AND APPLICATION

A. AQUEOUS

1. Method 3005A and USEPA CLP ILM0 4.1, "Acid Digestion of Waters for Total Recoverable or Dissolved Metals for Analysis by ICP Spectroscopy".
   a. This method is used to prepare surface water, ground water, drinking water and wastewater samples for analysis by inductively coupled argon plasma spectroscopy (ICP).
2. Method 200.7, "Determination of Metals and Trace Metals in Water and Wastes by Inductively Coupled Plasma-Atomic Emission Spectrometry"
   a. This method is used to prepare surface water, ground water, drinking water and wastewater samples for analysis by inductively coupled argon plasma spectroscopy (ICP).
3. Method 3010A, "Acid Digestion of Aqueous Samples and Extracts for Total Metals for Analysis by ICP Spectroscopy".
   a. This method is used to prepare aqueous samples, EP and mobility-procedure extracts, and wastes that contain suspended solids for analysis by ICP. The procedure is used to determine total metals.
4. Method 3030C (Standard methods), "Preliminary Treatment for Acid-Extractable Metals".
   a. This method is used to prepare ground water samples from North Carolina for analysis by ICP.

B. SOLIDS

1. Method 3050B, "Acid Digestion of Sediments, Sludges and Soils".
   a. This method is used to prepare sediments, sludges and soil samples for analysis by ICP. Since certain matrices may result in poor recovery, the method of standard additions may be used when analyzed.
   b. It should be noted that some metals could be biased high with the soil digestion when dilution is necessary. Take necessary measures to ensure that dilutions are made as accurately as possible.
2. USEPA CLP ILM0 4.1, “Acid Digestion of Soil/Sediment”
   a. This method is used to prepare sediments and soil samples for analysis by ICP. Since certain matrices may result in poor recovery, the method of standard additions may be used when analyzed.

D. **NOTES:**

1. "Total Metals" includes all metals, inorganically and organically bound and both dissolved and particulate.
2. "Dissolved metals" includes all metals present in a sample after filtration through a 0.45 micron filter followed by digestion.

II. SUMMARY OF METHODS

A. A representative sample of water or soil is put into an acid medium and exposed to heat for a certain amount of time. This allows for reduction of interferences by organic matter and converts metals bound to particulates to form the free metal that can be determined by ICP-Atomic Emission Spectrometry.

NOTE: When a reporting limit is required for a project lower than is customary, a four times concentration or alternate soil digestion ratio must be used in order to reach that lower level. Care must be taken to matrix match this concentrated aliquot. A blank and laboratory control sample (at a reduced concentration) are required with this concentration. A matrix spike (not at reduced concentration) and duplicate or matrix spike and matrix spike duplicate is needed per 20 samples or per batch.

III. SAMPLE HANDLING AND PRESERVATION

A. AQUEOUS

1. Samples are taken in high density polyethylene, one litter bottles. Samples should be preserved with concentrated HNO_3 to a pH <2 immediately upon sampling. If dissolved metals are to be analyzed the sample should be filtered before the HNO_3 is added. The samples should be maintained at 4°C until analysis. The holding time for metals samples is 180 days or approximately 6 months.

B. SOLIDS

1. Samples are taken in high density polyethylene (CLP only) or glass bottles. The samples should be maintained at 4°C until analysis. The holding time for metals samples is 180 days or approximately 6 months.

IV. INTERFERENCES

A. AQUEOUS

1. Solvents, reagents, glassware, and other sample processing hardware may yield artifacts and/or interferences to sample analysis. All these materials must be demonstrated to be free from interferences under the conditions of the analysis by analyzing method blanks.

B. SOLIDS

1. Sludge samples can contain diverse matrix types, each of which may present its own analytical challenge. Spiked samples and any relevant standard reference material should be processed to aid in determining whether this method is applicable to a given waste.

V. SAFETY

A. Normal accepted laboratory safety practices should be followed while performing this analysis.

B. Be certain the exhaust hood is functioning before you begin the digestion procedure.

C. Hot acids can be extremely corrosive. Avoid inhalation or contact with skin.

VI. EQUIPMENT/APPARATUS

A. Fume hood, Labconco or equivalent.

B. Hot plate, Thermolyne cimarec-3 or equivalent source for use at 95°C. The temperature of the hot plate must be monitored via the use of a temperature blank.

C. Thermometer capable of reading 80 to 120 degrees C – ERTCO cat# 611-3-SC or equivalent.

D. Vacuum pump for filtering dissolved metals- Gast or equivalent.

E. Analytical balance capable of weighing to 0.01 gram. Mettler model BB300 or equivalent.

F. Beckman CS-6R centrifuge.
G. Various class A volumetric glassware and ribbed watchglasses, Pyrex or equivalent.
H. Whatman No. 41 filter paper or equivalent.
I. Whatman No. 42 filter paper or equivalent.
J. Whatman 0.45 micron filter paper or equivalent.
K. 250 mL beaker or other appropriate vessel such as polypropylene block digester tubes, watch glasses and caps.
L. Stirring device, e.g. magnetic stirrer, glass rod or equivalent.
M. Manual Sample Mill
N. Wiley Sample Mill
O. Clippers for cutting vegetation

NOTE: All glassware should be acid washed.

VII. REAGENTS AND STANDARD PREPARATION

A. REAGENTS

1. Metals grade Nitric acid (HNO_3). Reagent should be analyzed to determine level of impurities. If method blank is <MDL, then the reagent can be used.
2. Metals grade Hydrochloric acid (HCl). Reagent should be analyzed to determine level of impurities. If method blank is <MDL, then the reagent can be used.
3. 30% hydrogen peroxide reagent, ACS Grade. Reagent should be analyzed to determine level of impurities. If method blank is <MDL, then the reagent can be used.
4. Metals grade Sulfuric acid (H_2SO_4). Reagent should be analyzed to determine level of impurities. If method blank is <MDL, then the reagent can be used.
5. Reagent water (Deionized water).
6. Potassium Permanganate - Ultra pure grade. Reagent should be analyzed to determine level of impurities. If method blank is <MDL, then the reagent can be used.
7. Ammonium hydroxide, concentrated, reagent grade. Reagent should be analyzed to determine level of impurities. If method blank is <MDL, then the reagent can be used.
8. Ammonium phosphate, reagent grade- Reagent should be analyzed to determine level of impurities. If method blank is <MDL, then the reagent can be used.

B. STANDARDS

1. Traceability

a. A LIMS record shall be maintained on all reference materials. The record shall include date of receipt, source, purity, all compositional information, storage conditions and expiration date. These materials/solutions are to be identified by a unique number in the LIMS as well as on the container's label.

b. All working standards made from reference materials shall be labeled with a unique ID number with complete information on preparation date, concentration of each compound, solvent, preparer's name, expiration date and the information is recorded in LIMS. Reagents shall be labeled with date received and expiration date, if applicable. All of the information described above shall also be recorded in LIMS. Measurements made during standards preparation (e.g., from weighing operations, volume diluted to, etc.) shall also be recorded. There should be no container with sample, sample extract, standard solution, etc. that is not correctly labeled and properly stored.

c. The analyst must initial and date each entry made in LIMS.

2. PREPARATION

A. Laboratory control sample
   1. Aqueous
      a. This solution is prepared as follows: 50 mL concentrated HCl, 20 mL concentrated HNO_3, 1 mL of CLP-CAL-1, Solution A, 1 mL of CLP-CAL-1 Solution B, 0.25 mL of CLP-CAL-2, and 0.25 mL of CLP-CAL-3 diluted to 1 L in a volumetric flask. Use 50 mL (100 mL for strict CLPIlM0 4.1) for digestion. This solution is given a unique identifier and recorded in sample LIMS.
      b. For four times concentrated samples: The solution is prepared as follows: 50 mL concentrated HCl, 20 mL concentrated HNO_3, 1mL CLPP-SPK-4 (Inorganic Ventures) (This solution contains 10 mg/L Selenium, 100 mg/L Antimony, 50 mg/L Cadmium and Thallium, 40 mg/L Arsenic and 20 mg/L Lead) to 1 L in a volumetric flask. This solution is given a unique identifier. Use 12.5 mLs to 50 mLs and prepare two aliquots. Heat at 90 to 95°C to reduce the volume in each vessel to ten mLs and then combine each 10 mL aliquot into one vessel and take to a final volume of 25 mLs. Take care to matrix match acids so that the final 25 mL portion will contain 2% HNO_3 and 5% HCl. Use 0.125 mLs HNO_3 and 0.3125 mLs HCl to each 50 mL vessel.
   2. Solids:
      a. 1.0 ±0.02 (or 2.0 ±0.02) gram aliquot of teflon chips is weighed and spiked using the same spiking solution used for matrix spikes. This sample is given a unique identifier according to the Lot# for the teflon chips used and when digested is given the descriptor. i.e. BS1 and then BS2 etc. plus the unique identifier number assigned. Alternatively a solid matrix standard reference material is obtained from the manufacturer. This sample is given a unique identifier and the weight is recorded in a bound logbook and transfered to LIMS.

B. Spiking solution
   1. Sample is spiked using 0.1 mL of CLP-CAL-1, Solution A, 0.1 mL of CLP-CAL-1 Solution B, 0.025 mL of CLP-CAL-2 and 0.025 mL of CLP-CAL-3 for a final volume of 100 mL. If only 50 mL is used, decrease amount used appropriately. These solutions are given unique identifiers. Record the amount spiked and the unique identifier of the standard.
   2. CLP sample is spiked using 0.1 mL CLPP-SPK-1 and 0.1 mL CLPP-SPK-4 for a final volume of 100 mL. If only 50 mL is used, decrease amount used appropriately. These solutions are given unique identifiers.
   3. For samples that require four times concentration, the sample is spiked using 0.0125 mLs of CLPP-SPK-4 to each of two vessels with 50 mLs of sample in each. The volume of each of the vessels is lowered to less then 10 mLs and combined and the final volume of this concentrated sample is 25mLs.

VIII. CALIBRATION

A. The temperature of the samples must be maintained at 95°C and monitored via a temperature blank. Record in temperature logbook for later transfer into LIMS.

IX. PROCEDURE

A. Glassware preparation for digestion or when the hot-block can not be used:
   1. Wash glassware with hot soapy water and rinse thoroughly. (Beakers must be washed as soon as possible after being used, dirty beakers must not be allowed to sit overnight.)
   2. Rinse glassware with reagent water that contains 5% HNO_3 and 5% HCl followed by a rinse with reagent water.
   3. Prior to use, all glassware must be confirmed clean via a glassware check. Otherwise, repeat step "2" until the glassware check passes.

B. Aqueous sample filtration (for dissolved metals):
   1. Thoroughly clean a flask and funnel with hot soapy water. Next, rinse the flask and funnel with 1:5 HNO_3 followed by a thorough D.I. water rinsing. This step is very important because the filters contain some metals (namely Zn) which could contaminate the samples.
   2. Rinse a 0.45 micron filter with 1:5 HNO_3 thoroughly, followed by D.I. water.
   3. Filter the unpreserved sample. If dissolved Hg analysis is requested for the sample, filter at least 200 mL.
   4. Discard the first 50 to 100 mL.
   5. A preparation blank must be taken through the filtration step and analyzed with the sample.
   6. Preserve the sample with HNO_3 to pH<2.
   7. Soluble samples that are clean and clear do not have to be digested. Use 100 mL sample, add 5 mL of concentrated HCl and 2 mL of concentrated HNO_3. **Samples must be digested unless approval for analysis without digestion is received from the project manager.**

C. Aqueous sample preparation
   1. Method 3005A and USEPA CLP ILM0 4.1, "**Acid digestion procedure for total recoverable or dissolved metals for analysis by ICP ".**
      a. Shake sample thoroughly and pour 50 mL of the well-mixed sample into a digestion vessel. For samples which require concentration pour 50 mLs of the well-mixed sample into two digestion vessels.
      b. Add 0.50 mL (1 mL of (1+1) when strict CLP ILM0 4.1 is required) concentrated HNO_3 to the sample. For samples which require concentration, add 0.125 mL (0.25 mL of (1+1) when strict CLP ILM0 4.1 is required) concentrated HNO_3 to the sample.
      c. Add 2.5 mL (5 mL of 1+1) when strict CLP ILM0 4.1 is required) concentrated HCl to the sample. For samples which require concentration, add 0.3125 mL (0.625 mL of (1+1) when strict CLP ILM0 4.1 is required) concentrated HCl to the sample.
      d. Cover the sample with a ribbed watch glass or equivalent source.
      e. Transfer the digestion vessel to a pre-heated hot plate or hot block at 90 to 95°C. A temperature blank will assure correct temperature. The temperature must be recorded in the temperature logbook. Take the volume down to between 5 to 10 mL, (12 to 25 mLs when strict CLP ILM0 4.1 is required) **making certain that the sample does not boil**. **This is extremely important. Boiling may lead to vaporization of certain analytes.** Remove the sample from the hot plate and cool
      f. When necessary, filter or centrifuge the sample to remove insoluble material that could clog the nebulizer. The filtering apparatus must be thoroughly cleaned with dilute nitric acid prior to filtration.

g. Bring sample to its predigestion volume (or when samples require concentration, to a volume four times lower then what was started with) with DI water in the digestion vessel. The final volume must be recorded in the LIMS.
h. The sample is now ready for analysis.
i. The LIMS must contain the date, analyst, sample number, client, sample mass/volume, final volume of digestate, lot # of acids used and the preparation and ID of standards plus identification #'s for standards used for spiking and the volume spiked into the sample.

2 Method 200.7, "**Acid digestion procedure for total recoverable metals**".
a. Shake sample thoroughly and pour 50 mL of the well-mixed sample into the digestion vessel. If sample contains undissolved solids >1% refer to Section 11.3 of Method 200.7 for subsequent procedures.
b. Add 1.0 mL concentrated HNO_3 to the sample.
c. Add 2.50 mL concentrated HCl to the sample.
d. Cover the sample with a ribbed watch glass or equivalent source.
e. Transfer the digestion vessel to a pre-heated hot plate or equivalent source at 85°C. Take the volume down to between 10 to 15 mL, **making certain that the sample does not boil**. **This is extremely important. Boiling may lead to vaporization of certain analytes.**
f. Leave sample on hot plate and gently reflux for 30 minutes. Remove from hot plate and cool.
g. Bring sample to its predigestion volume with DI water in the digestion vessel.
h. When necessary, filter or centrifuge the sample to remove insoluble material that could clog the nebulizer. The filtering apparatus must be thoroughly cleaned with dilute nitric acid prior to filtration.
i. The sample is now ready for analysis.
j. The LIMS must contain the date, analyst, sample number, client, sample mass/volume, final volume of digestate, lot # of acids used and the preparation and ID of standards.

3. Method 3010A, "**Acid Digestion of Aqueous Samples and Extracts for Total Metals for Analysis by ICP Spectroscopy**".
a. Shake sample thoroughly and pour 50 mL (5ml diluted to 50mL for TCLP, full 50ml volume for SPLP) of the well-mixed sample into the digestion vessel.
b. Add 1.5 mL concentrated HNO_3 to the sample.
c. Cover the sample with a ribbed watch glass.
d. Transfer the digestion vessel to a pre-heated hot plate or hot block at 90 to 95°C. A temperature blank must be used, with the temperature being recorded in the temperature logbook. Take the volume down to a low volume (~5 mL), **making certain that the sample does not boil**. **This is extremely important. Boiling may lead to vaporization of certain analytes. Also make certain that no portion of the bottom of the digestion vessel is allowed to go dry. This may lead to low recoveries.** Remove the sample from the hot plate and cool.
e. Add another 1.5 mL portion of concentrated HNO_3 to the sample.
f. Cover the sample with a ribbed watch glass.
g. Transfer the vessel to the hotblock or equivalent source. Increase the temperature so a gentle reflux occurs. Continue heating, adding additional acid as necessary, until the digestion is complete (generally indicated when the digestate is light in color or does not change in appearance with continued refluxing).

h. Uncover the vessel and evaporate to a low volume (~3 mL) **making certain that no portion of the bottom of the digestion vessel is allowed to go dry.** Remove and cool.
i. Add 2.5 ml of 1:1 HCl (10 mL/100 mL of final solution).
j. Cover the digestion vessel and reflux for an additional 15 minutes.
k. Bring sample to its predigestion volume in digestion vessel.
l. When necessary, filter or centrifuge the sample to remove insoluble material that could clog the nebulizer. The filtering apparatus must be thoroughly cleaned with dilute nitric acid prior to filtration.

Note: When preparing DoD project samples, if any sample in a digestion batch requires filtration, all samples (including QC samples) must be treated in the same manner.

m. The sample is now ready for analysis.
n. The LIMS must contain the date, analyst, sample number, client, sample mass/volume, final volume of digestate, lot # of acids used and the preparation and ID of standards.

4 Method 3030C (Standard Methods), "**Preliminary treatment for Acid-Extractable Metals"**

a. Shake sample thoroughly and pour 50 mL of the well-mixed sample into a 50 mL digestion vessel.
b. Add 2.5 mL 1:1 HCl to the sample.
c. Heat 15 minutes in a hot bath.
d. Filter through a membrane filter.
e. Transfer to ICP analyst.

D. Solid sample preparation

It is extremely important that waste (when appropriate), soil and sediment samples be mixed thoroughly to ensure that the sample is as representative as possible of the sample media. The most common method of mixing is referred to as quartering. The quartering procedure should be performed as follows:

- *The material in the sample pan(inorganic-plastic/organic-aluminum) should be divided into quarters and each quarter should be mixed individually.*
- *Two quarters should then be mixed to form halves.*
- *The two halves should be mixed to form a homogenous matrix.*

This procedure should be repeated several times until the sample is adequately mixed.

NOTE: Samples that are clay type materials should be handled in a different manner. Due to these type sample matrices having an affinity to stick to most anything that touches it, another approach must be followed. Obtain a representative sub-sample aliquot from the center or middle section of the sample container.

Grinding of Vegetation Samples

Remove sample from shipping container and brush off dirt particles. Chop sample into about half inch pieces with clippers or other cutting tool. Place the sample in an aluminum pan and air-dry in an exhaust hood to the appropriate dryness for grinding. It should be dry

enough where it won't stick to the inside of the mill. Grind the dried sample to fineness in either the manual sample mill or the Wiley mill or both if needed. Place the ground sample in a container and label immediately.

1. USEPA CLP ILM0 4.1, **"Acid digestion of Soil/Sediment"**
   a. Mix the sample thoroughly to achieve homogenity. For each digestion procedure, weigh (to the nearest 0.01 g) a 1.0 to 1.5 g portion of sample and transfer to a digestion vessel.
   b. Add 10 mL of 1:1 nitric acid (HNO_3), mix the slurry, and cover with a watch glass or equivalent source. Heat the sample to 92 to 95°C and reflux for 10 minutes without boiling. Allow the sample to cool, add 5.0 mL of concentrated HNO_3, replace with watch glass or equivalent source, as appropriate, and reflux for 30 minutes. Do not allow the volume to be reduced to less than 5 mL while maintaining a covering of solution over the bottom of the heating vessel.
   c. After the second reflux step has been completed and the sample has cooled, add 2 mL of Type II water and 3.0 mL of 30% hydrogen peroxide (H_2O_2). Return the heating vessel to the hot plate or equivalent heating source for warming to start the peroxide reaction. Care must be taken to ensure that losses do not occur due to excessively vigorous effervescence. Heat until effervescence subsides, and cool the heating vessel.
   d. Continue to add 30% H_2O_2 in 1 mL aliquots with warming until the effervescence is minimal or until the general sample appearance is unchanged. (NOTE: Do not add more than a total of 10 mL 30% H_2O_2.)
   e. If the sample is being prepared for ICP analysis of Al, As, Sb, Ba, Be, Ca, Cd, Cr, Co, Cu, Fe, Pb, Mg, Mn, Ni, K, Se, Ag, Na, Tl, V, and Zn, add 5 mL of 1:1 HCl and 10 mL of Type II water, return the covered heating vessel to the hot plate or equivelent heating source, and heat for an additional 10 minutes. After cooling, filter through Whatman No. 42 filter paper (or equivalent) and dilute to 50 mL with Type II water. NOTE: In place of filtering, the sample (after dilution and mixing) may be centrifuged or allowed to settle by gravity overnight to remove insoluble material. Dilute the digestate to 144 mL with DI water, add 5 mLs concentrated HCl and 1 mL of concentrated HNO_3, mix well and place into the appropriate container. The diluted sample has an approximate acid concentration of 2.5% (v/v) HCl and 5% (v/v) HNO_3. The sample is now ready for analysis.
   f. The LIMS must contain the date, analyst, sample number, client, sample mass/volume, final volume of digestate, lot # of acids used and the preparation and ID of standards and ID of matrix spikes and the amounts used for spiking.
2. Method 3050B, **"Acid digestion of Sediments, Sludges and Soils"**
   a. Mix the sample thoroughly for 5 minutes using a plastic spatula or Teflon coated spatula in a glass or plastic weigh boat to achieve homogeneity.
   b. Weigh approximately (to the nearest 0.01 g) a 1 to 1.5 g portion of the sample directly into a digestion vessel. For samples with low percent solids a larger sample size may be used as long as digestion is completed. Record the exact mass in the LIMS.

      NOTE: To achieve the lowest reporting limit possible, use a 2.0 g portion of sample with an ending volume of 100 mLs.
   c. Add 5 mL D.I. water and 5 mL concentrated HNO_3(1:1), mix the slurry and cover with a watch glass. Place the sample in a preheated hot block and reflux at 95°C for

10 to 15 minutes being certain that the sample does not boil. Record temperature in temperature logbook

d. Allow the sample to cool. Add 5 mL concentrated HNO_3, replace the watch glass and heat/reflux again for 30 minutes. If brown fumes are generated, indicating oxidation of the sample by HNO_3, repeat this step (addition of 5 mL of concentrated HNO_3) over and over until no brown fumes are given off by the sample indicating the complete reaction with HNO_3. Using a watch glass or equivalent allow the solution to evaporate to approximately 5 mL without boiling at 95°C $\pm$ 5°C for approximately two hours. Maintain a covering of solution over the bottom of the vessel at all times. Do not allow the volume to be reduced to less than 5 mL while maintaining a covering of solution over the bottom of the beaker. If the volume does get low, add 2.5 mL of D.I. water to bring volume back up.

e. Take the sample off the hot block and allow it to cool. Next, add 2 mL of D.I. water and 3 mL of 30% Hydrogen Peroxide. (The sample will bubble upon the addition of H_2O_2 if it is still warm.) Cover the vessel with a watch glass and return the sample to the hot block or equivalent source and heat until the bubbling subsides. Care must be taken to ensure that losses do not occur due to excessively vigorous effervescence. Heat until effervescence subsides and cool the beaker. Add two more 3 mL portions of H_2O_2 to the sample in the same manner as before. (NOTE: Do not add more than a total of 10 mL 30% H_2O_2.)

f. Cover the sample with a ribbed watch glass and continue heating the acid-peroxide digestate at 95°C $\pm$ 5°C without boiling for approximately two hours until the volume has been reduced to approximately 2.5 mL. Maintain covering of solution over the bottom of the vessel at all times.

g. Add 2.5 mL of DI water and 2.5 mL of concentrated HCl and 10 mL of DI water, cover the sample with a ribbed watch glass and continue refluxing for an additional 10 minutes without boiling

h. When necessary, filter or centrifuge the sample to remove insoluble material that could clog the nebulizer. The filtering apparatus must be thoroughly cleaned with dilute nitric acid prior to filtration.

i. Bring sample up to 50 mL with D.I. water in the vessel. Add 150 ml of DI water to a 250 ml sample bottle. Invert the 50 ml sample digestion vessel several times to mix the sample and pour sample into the 150 ml of the sample bottle. Pour some sample back into the 50 ml sample digestion vessel to rinse and pour back into the 250 ml sample bottle and cap and mix.

   NOTE1: When preparing DoD project samples, if any sample in a digestion batch requires filtration , all samples (including QC samples) must be treated in the same manner.

   NOTE2: To achieve the lowest reporting limit possible use 2.0 grams of sample with an ending volume of 100 mLs.

j. The sample is now ready for analysis.

k. The LIMS must contain the date, analyst, sample number, client, sample mass/volume, final volume of digestate, lot # of acids used and the preparation and ID of standards.

X. CALCULATIONS

A. The analyst must be supplied with both beginning sample masses/volumes and final digestate volumes. This information must be recorded in the digestion log.

XI. QUALITY CONTROL

A. Digestion

1. Temperature blank
   a. The temperature of the hot plate/hot block must be monitored for temperature during the digestion process.
   b. The thermometer must be tagged with annual calibration information. Record the thermometer reading, correction factor and the corrected temperature in the digestion log.
2. Blanks
   a. Digest a blank with every batch of samples digested (20 sample maximum). The blank is prepared by adding all the same reagents added to the samples to a clean dry beaker and taking it through the same process as the samples.
   b. Also, there must be a blank for every different method of digestion that is set up that day, every 20 samples.
   c. There must also be a blank for every different matrix of samples that is to be digested, every 20 samples.
   d. Sample is given a unique identifier in the digestion log.
3. Laboratory Control Samples
   a. For water samples, one LCS is digested with every batch of samples digested (20 sample maximum).
   b. For water samples, a LCS is digested every day for each type of digestion, every 20 samples.
   c. For soil/sediment samples, a soil matrix standard reference material (SRM) must be digested per batch (20 samples maximum) or alternatively a spiked teflon chip sample.
   d. Sample is given a unique identifier in the digestion log.
4. Duplicates
   a. A duplicate is prepared every 20 samples. This usually takes the form of a matrix spike duplicate.

      NOTE: Certain projects require a sample duplicate and a matrix spike duplicate with each set of twenty samples.
5. Blank Spike
   a. This is required for certain projects.

B. Sample Matrix

NOTE: Field blanks/duplicates, trip blanks, or equipment blanks are not to be used for sample matrix QC samples.

1. Matrix spike
   a. Digest a spike and spike duplicate every 20 samples where sample volume is adequate to do so. Choose a sample (if possible) that has a lot of metals requested to be analyzed.

      NOTE: For some projects, a sample duplicate and sample spike may be required instead of a spike and spike duplicate. Your supervisor should make you aware of these projects.
   b. The following metals do not get digested spikes when using CLP spike.

      Calcium
      Magnesium
      Sodium

Potassium

c. For TCLP samples, a spike must be digested for every matrix. You should inspect the sample (original sample prior to extraction) or check the log book to determine matrix type. (Also the matrix spike aliquot must be added to the extract after filtration but before preservation.)

d. The CLH project requires that a high and a low spike be prepared and analyzed. Spikes shoud be prepared at 40 mg/Kg and 400 mg/Kg for soil samples and 200 ug/L and 2000 ug/L for aqueous samples.

XII. CORRECTIVE ACTIONS

A. Sample boils during digestion.
   1. Redigest another sample aliquot.

B. Sample goes dry or portion of beaker bottom is exposed due to excess evaporation during digestion.
   1. Redigest another sample aliquot.
   2. Glass beaker dry for an extended period of time? Discard beaker.

XIII. SPECIAL NOTES

A. **Never** take for granted how a sample should be digested. If the sample looks strange or unusual, or if you are not sure what metals the sample gets, what detection limits are required, whether the sample is total or dissolved, or even what method of digestion should be used, always ask your supervisor or the person who is to analyze the sample. How metals need to be digested changes too often to take it for granted.

B. **Antimony (Sb) soils** should be analyzed within 48 hours of digestion whenever possible. When a soil requesting Antimony analysis is received, you must coordinate with the person who will be analyzing it to be sure that they can analyze it on the same day that it is digested.

C. Labels for the digested sample must be written in a neat and legible manner. The labels must include such information as sample number, client name, the date digested, and the volume or mass digested.

D. There are several precautions that must be taken to minimize the possibility of contamination.
   1. All metals glassware must be kept separate from all other laboratory glassware.
   2. Metals glassware must be washed as soon as possible after being used. **Dirty metals beakers must not be left overnight.**
   3. Acid to be used for metals digestions must be kept separate from all other laboratory acid.

E. Samples must be digested in a timely manner to ensure ICP analysis remains on schedule for data generation. Samples received on or before Wednesday of week X must be prepared for ICP digestion by the end of week X. Your supervisor must be consulted if this schedule can not be met at a particular time.

F. Please consult Waste Disposal SOP-QS14, for information concerning disposal of waste generated from this area. Quantity of chemicals purchased should be based on expected usage during its shelf-life and the disposal cost of unused material. Actual reagent preparation volumes should reflect anticipated usage and reagent stability.

Addendum for USEPA CLPILM 05.2 AQUEOUS & SOIL/SEDIMENT

The following is a list of changes for sample preparation when the 5.2 statement of work is required:

1. Soluble samples are required to be digested unless the chain of custody specifically states that digestion is not required. An MDL study must be done on the unprepared MDL solution in order to provide MDL levels for samples that are not digested. When digestion is not required an LCSW and post digestion spike are not required.
2. Digestates must be stored until 365 days after delivery of a complete, reconciled data package.
3. Preparation codes are used on form 13's. They are found in the 5.2 statement of work page B-39 3.4.12.2.4.

DEFINITIONS – Refer to SOP-QS08 for common environmental laboratory definitions.

EMPIRICAL LABORATORIES, LLC
STANDARD OPERATING PROCEDURE

METALS: SOP 103 **REVISION #: 18** **EFFECTIVE DATE: 041110**

MERCURY ANALYSIS IN WATER BY MANUAL COLD VAPOR TECHNIQUE METHODS USEPA SW846 7470A and 245.1 CLP-M 4.1 (NJDEP DOES NOT ACCEPT CLPILM 04.1 AFTER JUNE, 2003), ADDENDUM FOR USEPA CLP ILM 05.2

APPROVALS:

Lab Director: _____ Date: 4/12/10

Data Quality Manager: _____ Date: 4/11/10

Section Supervisor: Betty DeVille Date: 4/13/10

Changes Summary

Revision 18, 04/11/10

- The SOP is an update from Revision 17 dated 03/25/10
- The SOP is formatted to include all 22-elements required per the NELAC standards
- The laboratory's revision of all technical SOPs now includes a Table of Contents that provides the map of the technical information contained within the SOP.
- Additional requirements, based upon the DOD QSM 4.1, have been integrated into the routine sample flow; however, if the requirement is different from routine sample flow, then the requirement is outlined and documented as such to be followed only when DoD samples are analyzed.
- Tables have been updated to reflect the current limits/processes.

Table of Contents

1. Identification of the Test Method
2. Applicable Matrix or Matrices
3. Detection Limit
4. Scope of Application, Including components to be Analyzed
5. Summary of the Test Method
6. Definitions
7. Interferences
8. Safety
9. Equipment & Supplies
10. Reagents and Standards
11. Sample Collection, Preservation, Shipment, and Storage
12. Quality Control
13. Calibration and Standardization
14. Procedure
15. Data Analysis and Calculations
16. Method Performance
17. Pollution Prevention
18. Data Assessment and Acceptance Criteria for Quality Control Measures
19. Contingencies for Handling out-of-control or unacceptable data
20. Waste Management
21. References
22. Tables, Diagrams, Flowcharts and Validation Data, and Addendum

1.0 Identification of the Test Method

This method is a cold-vapor atomic absorption procedure for determining the concentration of mercury, and is compliant with SW846 Method 7470A, USEPA Method 245.1, and USEPA SOW ILM04.1.

2.0 Applicable Matrix or Matrices

This method is a cold-vapor atomic absorption procedure for determining the concentration of mercury in mobility-procedure extracts, aqueous wastes, and ground waters. This method can also be used for sludge-type wastes. All samples must be subjected to an appropriate dissolution procedure prior to analysis.

3.0 Detection Limit

Method Detection Limit (MDL), Empirical Laboratories' Reporting Limit (ERL), Contract Required Quantitation Limit (CRQL) and Analyte Wavelength:

Limits Table

Aqueous Method Detection Limits(MDL)/Detection Limit(DL), Limit of Detection(LOD) Empirical Laboratories' Reporting Limits(ERL)/Limit of Quantitation(LOQ), CLP OLM04.1 & OLM05.2 Contract Required Quantitation Limits (CRQL)					
Mercury by EPA 245.1, 7470A, SOW 4.1 & 5.2	**AQUEOUS MDL/DL (ug/L)**	**AQUEOUS LOD (ug/L)**	**AQUEOUS ERL/LOQ (ug/L)**	**AQUEOUS CRQL ILMO 4.1 (ug/L)**	**AQUEOUS CRQL ILMO 5.2 (ug/L)**
Mercury	0.080	0.16	0.20	0.20	0.20

Wavelength Table

ANALYTE	WAVELENGTH
Mercury	**253.7**

4.0 Scope of Application, Including Components to Be Analyzed

4.1 Each parameter that is analyzed and reported under the scope of this SOP is listed in **Table 1** of this SOP. This table also lists the associated Reporting Limit (also defined as the LOD) and the lowest Calibration level for each analyte. When applicable, surrogate and Internal Standard Analytes are listed and indicated as such within this table.

4.2 This method is a cold-vapor atomic absorption procedure for determining the concentration of mercury in mobility-procedure extracts, aqueous wastes, and ground waters. This method can also be used for sludge-type wastes. All samples must be subjected to an appropriate dissolution procedure prior to analysis.

4.3 In addition to inorganic forms of mercury, organic materials may also be present. These organo-mercury compounds will not respond to the cold vapor atomic absorption technique unless they are first broken down and converted to mercuric ions. Potassium permanganate oxidizes many of these compounds, but recent studies have shown that a number of organic mercurials, including phenol mercuric acetate and methyl mercuric chloride, are only partially oxidized by this reagent. Potassium persulfate has been found to give approximately 100% recovery when used as the oxidant step following the addition of the permanganate has been included to insure that organo-mercury compounds, if present, will be oxidized to the mercuric ion before measurement. A heat step is required for methyl mercuric chloride when present in or spiked to a natural system. For distilled water the heat step is not necessary.

4.4 The range of the method may be varied through instrument and/or recorder expansion. Using a 30 mL sample, a detection limit of 0.2 µg Hg/L can be achieved.

4.3 Extreme care should be taken when working with pure standard and stock standard solutions of these compounds and all handling of standards should be done in a hood. These compounds have been classified as known or suspected human or mammalian carcinogens.

5.0 Summary of the Test Method

The flameless AA procedure is a physical method based on the absorption of radiation at 253.7 nm by mercury vapor. Organic mercury compounds are oxidized and the mercury is reduced to the elemental state and aerated from solution in a closed system. The mercury vapor passes through a cell positioned in the light path of a flow injection Mercury system. Absorbance (peak height) is measured as a function of mercury concentration and recorded in the usual manner.

6.0 Definitions

6.1 Laboratory Quality System SOP QS08 "Technical / Operational Definitions, Minimum Essential Quality Control Elements, and Laboratory Calibration Procedures" provides information on the commonly used definitions.

6.2 Refer to SOP-431 for common definitions.

7.0 Interferences

7.1 Possible interference from sulfide is eliminated by the addition of potassium permanganate. Concentrations as high as 20 mg/L of sulfide as sodium sulfide do not interfere with the recovery of added inorganic mercury from distilled water.

7.2 Copper has also been reported to interfere; however, copper concentrations as high as 10 mg/L had no effect on recovery of mercury from spiked samples.

7.3 Sea waters, brines and industrial effluents high in chlorides require additional permanganate (as much as 6.25 mL in 30 mL of sample). During the oxidation step, chlorides are converted to free chlorine which will also absorb radiation at 253 nm. Care must be taken to assure that free chlorine is absent before the mercury is reduced and swept into the cell. This is accomplished by using an excess of hydroxylamine sulfate reagent (6.25 mL to 30 mL of sample).

7.4 Samples containing high concentrations of oxidizable organic materials, as evidenced by high chemical oxygen demand values, may not be completely oxidized of organic mercury will be low. The problem can be eliminated by reducing the sample volume or by increasing the amount of potassium persulfate (and consequently stannous chloride) used in the digestion.

8.0 Safety

8.1. Normal accepted laboratory practices should be followed while performing this procedure.

8.2. The toxicity and carcinogenicity of each reagent in this method have not been fully established. Each chemical should be regarded as a potential health hazard and exposure to these compounds should be minimized by good laboratory practices. Normal accepted laboratory practices should be followed during reagent preparation and instrument operation. Always wear safety glasses or full-face shield for eye protection when working with these reagents. Each laboratory is responsible for maintaining a current safety plan, a current awareness file of OSHA regulations regarding the safe handling of the chemicals specified in this method.

8.3 Mercury compounds are highly toxic if swallowed, inhaled, or absorbed through the skin. The analyst should use chemical resistant gloves when handling concentrated mercury standards.

8.4 The analyst should make sure that the system is vented to fresh permanganate in a bottle located at the back. Otherwise Hg vapors could be vented to the room.

9.0 Equipment & Supplies

9.1 Perken Elmer Flow injection Mercury system.

9.2 Mod Block Digester set to maintain 95$\pm$2°C for 2 hours.

9.3 Polypropylene sample digestion vessels with snap or screw caps or equivalent.
Five vessels of each lot of digestion vessels must be taken through analysis to check for mercury.

10.0 Reagents and Standards

Reagent grade chemicals shall be used in all tests. All reagents shall conform to the specifications of the Committee on Analytical Reagents of the American Chemical Society, where such specifications are available. Other grades may be used, provided it is first ascertained that the reagent is of sufficiently high purity to permit its use without lessening the accuracy of the determination. Certified stock standards are purchased from Spex, Ultra Scientific and other vendors depending on their availability. The date they are received is noted on the label or container they are received in and in the LIMS system. The date the standards are opened they are recorded and given a sequential number in the LIMS system. All stock standards are stored at room temperature.

10.1 REAGENTS

10.1.1 Concentrated sulfuric acid suitable for Hg determination.

10.1.2 Concentrated nitric acid suitable for Hg determination.

10.1.3 Stannous chloride: In a 1000 mL volumetric flask add approximately 500 mLs D.I. water, 30 mLs concentrated HCl, add 11 grams stannous chloride crystals swirl to mix and dilute to 1000 mLs. Prepare fresh daily.

10.1.4 3% HCl Carrier Solution: Dilute 30 mLs of concentrated metals grade HCl to one liter. Prepare fresh daily.

10.1.5 Sodium chloride-hydroxylamine chloride solution: Dissolve 120 grams of sodium chloride and 120 grams of hydroxylamine hydrochloride (very high grade --Do not get from Tennessee Reagents) in D.I. water and dilute to 1 liter. Note: this is normally made up 2 Liters at a time.

10.1.6 Potassium permanganate: 5% solution, w/v: dissolve 200 grams of potassium permanganate in 4000 mLs of D.I. water. Should have "suitable for mercury determination" written on the side of the potassium permanganate bottle. This reagent takes overnight stirring (minimum of 3 hours if absolutely necessary). Use stirring bar already in the reagent bottle for this purpose. It is very easy to contaminate with mercury.

10.1.7 Potassium persulfate: 5% solution, w/v: dissolve 100 grams of potassium persulfate in 2000 mLs D.I. water. Slight heating with stirring may be necessary to completely dissolve. The formation of crystals in this solution is not a problem.

10.2 STANDARDS

10.2.1 Traceability

10.2.1.1 All reference materials are given a unique identifier within Element and labeled with the Element #. This record shall include date of receipt, source, purity, all compositional information, storage conditions and expiration date. These materials/solutions are to be identified by a unique number within Element as well as on the container's label.

10.2.1.2 All working standards made from reference materials shall be labeled with a unique Element ID number with complete information on preparation date, concentration of each compound, solvent, preparer's name, and expiration date. Reagents shall be labeled with date received and expiration date, if applicable. All of the information described above shall also be recorded within Element. Measurements made during standards preparation (e.g., from weighing operations, volume diluted to, etc.) shall also be recorded. There should be no container with sample, sample extract, standard solution, etc. that is not correctly labeled and properly stored.

10.2.1.3. **NOTE:** All standard solutions should be prepared using class A volumetric flasks, class A volumetric pipettes (or calibrated Eppendorfs). All standards, blanks, and samples are taken through the digestion process.

10.2.1.4 Stock mercury solution: (100 µg/mL). Order from manufacturer already prepared. This solution is given a unique Element identifier.

10.2.1.5 Primary source and secondary source mercury standard solutions at 200 ug/L: dilute 2 mLs of stock solution to 1000 mLs in a 1000 mL volumetric flask, with 1.5 mLs concentrated HNO_3. This solution is recorded in Element and given a unique Element identifier.

10.2.2 Calibration Standards

Prepared from the primary source working standard. The preparation of the calibration standards, etc. is described below.

10.2.2.1 Dilute the volumes below to 30 mLs in a 70 mL polypropylene vessel. (Note: The standards are diluted to 10 mLs for the initial step of the digestion. From that point when 25 mLs of DI water are added to samples, 15 mLs of DI water is added to the standards.

ug/L Hg	mLs of 200 ug/L standard in 30 mLs
0.20	0.03
0.50	0.075
1.0	0.15
2.0	0.30
4.0	0.60
6.0	0.90
10.0	1.5

10.2.2.2 Appropriate reagents are added as below in the sample preparation section.

10.2.2.3 Prepare one vessel for each.

10.2.2.4 It is necessary to digest the calibration standards.

10.2.3 Calibration Verification Standards

10.2.3.1. Initial calibration verification (ICV) solution – 4.0 ug/L

10.2.3.1.1 Prepared by diluting 0.6 mL of the second source standard to 30 mL with reagent water in a 70 mL polypropylene vessel. (TV = 4.0 ug/L)

10.2.3.1.2 Appropriate reagents are added as below in the sample preparation section.

10.2.3.1.3 It is necessary to digest the ICV standards for Method 7470A, Method 245.1 does not require digestion of standards.

10.2.3.2 Continuing calibration verification (CCV) solution

10.2.3.2.1 Prepared from the primary source standard.

10.2.3.2.2 Prepared by diluting 0.3 mL of the primary standard at 200 ug/L to 30 mLs with reagent water in a 70 mL polypropylene vessel for 2.0 ug/L or 0.6 ml to 30 mls for 4.0 ug/L.

10.2.3.2.3 Appropriate reagents are added as below in the sample preparation section.

10.2.3.2.4 It is necessary to digest the CCV standards for Method 7470A, Method 245.1 does not require digestion of standards.

10.2.4 Digestion standards

10.2.4.1 Blank Spike

10.2.4.1.1 Prepared from the secondary source standard.

10.2.4.1.2 Prepared by diluting 0.3 mL of the second source standard to 30 mL with reagent water in a 70 mL polypropylene vessel.

10.2.4.1.3 Appropriate reagents are added as below in the sample preparation section.

10.2.4.1.4 This solution should be given a unique identifier within Element.

10.2.1.2 Matrix Spikes

10.2.1.2.1 Prepared from the secondary source working standard.

10.2.1.2.2 Prepared by diluting 0.3 mL of the second source standard to 30 mL with sample in a 70 mL polypropylene vessel. Project specific or method specific requirements may over-ride the spiking level.

10.2.1.2.3 Appropriate reagents are added as below in the sample preparation section.

11.0 Sample Collection, Preservation, Shipment, and Storage

11.1 Samples are preserved by acidification with nitric acid to a pH of 2 or lower immediately at the time of collection, and refrigeration to 4°C.

11.2 The holding time for the mercury digestion is 28 days from time of sampling.

12.0 Quality Control

12.1 Quality Systems SOP QS08 "Technical / Operational Definitions, Minimum Essential Quality Control Elements, and Laboratory Calibration Procedures" outlines details related to laboratory wide protocols on quality control.

12.2 An initial demonstration must be performed by each analyst performing this method. Four BS's are analyzed at 0.10ug/L. See **Table 2** for acceptance criteria.

12.3 (Reference SW-846, 7470A Update III, USEPA CLP ILMO 4.1 or 245.1, Rev 3.0, 5/94 for further clarification)

12.4 Daily

12.4.1. **The instrument must be calibrated daily for all projects.**

12.4.2 Begin each analysis with an ICV(QCS) second source. The control limits are ±10% and IPC (CCV) for 245.1, limits are ± 5% and subsequent analyses are ± 10%.

12.4.3 Analyze ICB. Control limits (<±MDL for USACE or ±RL/CRDL for others and CLP)., depending on method. **No analyte detected >2xMDL for DOD.**

12.4.4 If the ICV (QCS) is not in control a new curve must be analyzed prior to sample analysis.

12.4.5 If the IPC (initial CCV) for 245.1 is not within the limits of ±5%, try preparing another undigested CCV and reanalyzing before recalibrating. If this fails then a recalibration is necessary.

12.4.6 Follow each set of 10 samples with a CCV and also must end up with a CCV after the last sample. The control limits are ±20% for SW846-7470 and ± 10% for 245.1.

12.6.7 A CCB must always follow a CCV, the control limit is (<±MDL for USACE or ±RL/CRDL for others and CLP). CCB must be run at the beginning and end of a sequence and after every 10 samples. **No analyte detected >2xMDL for DOD.**

12.5 Quarterly or as needed when doing straight CLP work.

12.5.1 IDL's for CLP 4.1.

12.6 Digestion

12.6.1 BS data should be maintained and available for easy reference or inspection.

12.6.2 BLK (<1/2 ±RL or ±RL/CRDL for common contaminates (DOD) and ±RL/CRDL for others and CLP).

12.6.2.1 Employ a minimum of one preparation blank (BLK) per sample batch to determine if contamination or any memory effects are occurring. The BLK is taken through the same digestion/preparation steps as the samples being tested. The result for the preparation blank must be below the method detection limit. If not, the analyst must use good judgment to evaluate the impact upon the associated samples. There is no impact if an associated sample is below the method detection limit nor if the level in the sample is greater than 10X the level found in the preparation blank. If the level of mercury in a sample is above the method detection limit but less than 10X the level found in the preparation blank, the sample must be re-digested and re-analyzed or the data must be qualified on the final report. The project manager or QA manager will make this determination.

12.6.3 Laboratory control sample (BS)

12.6.3.1. Employ a minimum of one laboratory control sample (BS) per sample batch to verify the digestion procedure. The BS is taken through the same digestion/preparation steps as the samples being tested. The minimum control limits are ±20% for SW846-7470 and ±15% for 245.1. If the BS is not in control, the impact upon the client data should be evaluated and the associated sample(s) should be either re-digested or the data should be qualified. The project manager or QA Officer will make this determination.

12.7 Sample matrix:

12.7.1 Analyze one replicate sample for every twenty samples. A replicate sample is a sample brought through the whole sample preparation and analytical process in duplicate. It is acceptable to substitute a matrix spike duplicate for the sample replicate. CLP does not allow this. Project specific requirements will take precedence in these situations.

12.7.2 Analyze one spiked sample and spiked sample duplicate for every twenty samples. A replicate sample is a sample brought through the whole sample preparation and analytical process in duplicate. Project specific requirements will take precedence in these situations. CLP requires 1 duplicate and 1 spike per batch. If the analyte level in the sample is not greater than four times the spiking level, the spike recoveries should be within ±25% of the true value (**± 20% for DOD projects**). If not, check with supervisor to determine appropriate action. The final analytical report must document this situation.

NOTE: For TCLP extracts, a matrix spike must be performed for each different matrix. The method of standard additions must be used if the sample spike recovery is not at least 50% and the concentration of Hg does not exceed the regulatory level and if the concentration of Hg measured in the extract is within 20% of the regulatory level.

12.7.3 The relative percent difference (RPD) between replicate determinations is to be calculated as referenced in the laboratory QA manual. (A control limit of ± 20% RPD shall be used for sample values greater than ten times the instrument detection limit.) Supervisor must be notified if the control limit is not met. Supervisor will determine corrective action if required. The final analytical report must document this situation.

12.7.4 For 245.1 analyze one serial dilution (1 to 5 dilution) for every 20 samples or per analytical batch, whichever is more frequent. Percent recovery should be ±10%. The concentration of the original sample should be a minimum of 50X the IDL in order to apply the recovery criterion; if not, the serial dilution approach is not used.

12.7.5 When the sample matrix is so complex that viscosity, surface tension, and components can not be accurately matched with standards, the method of standard addition (MSA) is recommended. Section 8.6 of SW846-7000A provides tests to evaluate the need for using the MSA.

13.0 Calibration and Standardization

Quality Systems **SOP QS08 "**Technical / Operational Definitions, Minimum Essential Quality Control Elements, and Laboratory Calibration Procedures" related to Calibration Procedures provides laboratory wide protocols for calibration and standardization.

13.1 Set up the instrument with proper operating parameters.

13.1.1 Perkin Elmer Flow Injection Mercury System (FIMS).

13.1.1.1. Replace any old tubing that is around the pump cylinder. The sample transfer tubing connected to the separator cover must not have any moisture in it. If it does replace it. **(Perkin-Elmer tygon tubing, waste**

and carrier 1.52mm I.D., waste only 3.17mm I.D., stannous chloride 1.14mm I.D.)

13.1.1.2 Also replace the filter membrane with the rough side up. (for instructions refer to page 1-22 in maintenance manual.)

13.1.1.3 Turn on PE 100 spectrophotmeter; (Note: this must be on in order to start up the software on the computer.)

13.1.1.4 Turn on computer and go to icon "AA Win LAB Analyst".

13.1.1.5 Go to method; select "Hg CAL 2" then OK.

13.1.1.6 Wavelength = 253.7; smoothing points =9; measurement = peak height; read time =18sec.; BCC time = 2 sec.

13.1.1.7 Go to "Sample Info" and enter the order of the samples and other information that may be needed.

13.1.1.8 Save entered sample list under "Save ….sample info file" Note: description and batch ID are normally the date of analysis.

13.1.1.9 Go to "auto"; then to set-up. Select Browse in both spaces. One is to bring up your saved "Sample Information" File. The other is to select a results library. Double click on heading and choose.

13.1.1.10 Turn the printer on.

13.1.1.11 Connect all tubing to the pump and blocks.

13.1.1.12 Start the pump by going to "FIAS" and click the pump 1 Icon (120).

13.1.1.13 The pump will start, then lock down and tighten the tubes onto the pump.

13.1.1.14 Turn on the nitrogen tank, it should be above 500 psi on the gauge. Replace the nitrogen tank when it is at 500 psi.

13.1.1.15 The pressure gauge on the PE100 should be just below 100.

13.1.1.16 Use the tension adjuster to press down the tubing magazine to the pump head on the top and bottom. Start the pump and then lock them down. This technique needs to be demonstrated so that a new user will be able to understand what is needed here and how to do it.

13.1.1.17 Adjust the spring tension tubing until there is a constant "bubble of low rate" coming out to the waste tube.

13.1.1.18 Place carrier tubes into carrier and stannous chloride tube into $SnCl_2$. (Click the valve fill inject and make sure flow is correct and the line is rinsed).

13.1.1.19 Make sure the permanganate waste bottle is bubbling in order to absorb any Hg vapors which could be vented into the room.

13.1.1.20 Allow a few minutes for reagents to flow through the system before starting analysis.

13.1.1.21 Calibrate: Go to "Auto" click on "Analyze", click on "calibrate".

13.1.1.22 "Select Location" enter #'s to be ran, and then press "OK". Samples are done in increments of 10 samples

13.2 Analyze the calibration standards as below.

13.2.1 New calibration points must be analyzed when the ICV analysis is not within ± 5%. **A curve must be analyzed daily for all projects especially USACE and CLP projects.**

13.2.2 The curve should be linear with a calculated intercept with a minimum correlation coefficient (r) of $\geq$0.995 (USACE) or 0.998 (other). If not, a new curve must be analyzed.

14.0 Procedure

14.1 Glassware preparation

14.1.1 After use, samples are neutralized and disposed down an acid sink with running water and rinsed with tap water. Or the sample may be discarded into the Mercury waste drum.

14.1.2 Acid clean the glassware used for mercury prep as follows:

14.1.2.1 Rinse with low Hg content 1:1 HCl.

14.1.2.2 Rinse with D.I. water.

14.2 Label the vessels indicating which sample will be in each.

14.3 Prepare calibration standards as detailed above. Add all reagents to the standards which are added to the samples as outlined below.

14.4 Sample preparation

14.4.1. Transfer 30 mLs, or an aliquot diluted to 30 mLs of sample to the 30 mL mark on a 50 mL digestion vessel previously marked for this sample.

NOTE: Normally, **a**n automatic dilution of 10X to 100X is performed for all TCLP extracts. All TCLP samples get one matrix spike unless several come in at one time from the same client with the same matrix. Then one in ten of the same matrix gets spiked. Check with your manager.

14.4.2 Add 1.5 mLs of concentrated sulfuric acid to each vessel and mix.

14.4.3 Add 0.75 mL of concentrated nitric acid to each bottle and mix.

14.4.4 Add 4.5 mLs potassium permanganate solution to each vessel and mix. For sewage samples additional permanganate may be required. Shake and add additional portions of potassium permanganate to the solution if necessary, until the purple color persists for at least 15 minutes (not more than 7.5 mLs). If the purple color does not persist after the addition of 7.5 mLs $KMnO_4$ the sample must be diluted prior to digestion. Inform your manager that the minimum detection limit cannot be reached for that particular matrix.

NOTE: The same amount of $KMnO_4$ added to the samples should be present in the standards and blanks.

14.4.5 Add 2.4 mLs of potassium persulfate to each vessel and mix. Cover.

14.4.6 Heat for 2 hours in the block digester at 95$\pm$2°C (the block temperature must be monitored and documented. Record observed temperature, correction factor, and the corrected temperature), cool.

14.4.7 Samples may be saved at this point if there is not time to run the whole set that day.

NOTE: Stannous Chloride (VII. A 5.) and 3% HCl (VII. A 8.) are added by the instrument during analysis.

14.5 Sample analysis

14.5.1 Set up the instrument as described in the calibration section above.

14.5.2 When ready to run samples, add 1.8 mLs of sodium chloride-hydroxylamine chloride to reduce the excess permanganate. Sample analysis must be preceded by the analysis of an ICV with control limits of ±10% for SW846-7470 and ±5 % for 245.1. Followed by the ICB (< ±MDL for USACE or ±RL/CRDL for others and CLP).

14.5.3 Each set of ten samples and at the end of the analytical run must be followed by a CCV with control limits of ±20% for SW846-7470 and ±10% for 245.1.

14.5.4 CCB must always follow the CCV. Control limits are (<±MDL for USACE or ±RL/CRDL for others and CLP). CCB must be run at the beginning and end of a sequence and after every 10 samples. **No analyte must be detected >2xMDL for DOD.**

14.5.5 The auto-sampler log is set up to analyze 106 samples at a time.
Instrument Run Log example:

AS LOC	Sample ID
0	Wash
1	0.0
2	0.02
3	0.05
4	0.1
5	0.2
6	0.4
7	0.6
8	1.0
9	SEQ-ICV
10	SEQ-ICB
11	BS

AS LOC	Sample ID
12	BLK
13	Sample
14	Sample
15	Sample
16	Sample
17	Sample
18	Sample
19	Sample
20	Sample
21	SEQ-CCV
22	SEQ-CCB

23	Sample
24	Sample
25	Sample
26	Sample
27	Sample
28	Sample
29	Sample
30	Sample
31	MS
32	MSD
33	SEQ-CCV
34	SEQ-CCB

14.6 Data Reporting

14.6.1 Reduce data to result which will be reported.

14.6.2 Complete the data review checklist (attached). Must be completed and attached to each set of USACE data.

15.0 Data Analysis and Calculations

15.1 Quality Systems SOP QS09 "General and Commonly used Laboratory Calculations" provides details on general calculations used throughout the laboratory.

15.2 Apply a least squares fit to the calibration standards plotting µg Hg/L versus the absorbance. For the concentration of the standards, assume 30 mL of solution volume (the 0.1 µg Hg standard will be input as 1.0 µg Hg/L)
(0.1µg Hg / 0.030 L solution).

15.3 Input the sample absorbance into the mercury spreadsheet making sure that you are using the correct spreadsheet for the matrix of the sample.

15.4 Also make sure that the appropriate dilution factor is inputted in the correct space on the spreadsheet.

15.5 Report the data as µg Hg/L of sample.

16.0 Method Performance

16.1 Demonstration of Capability (DOC): Each analyst must perform a DOC prior to reporting data. The analyst must prepare (for prep technicians) and analyze (analysts reviewing and reporting data) 4-BS samples. The data is calculated for accuracy and precision requirements. The DOC form, as listed within section 2.5 of the Quality is completed by each analyst and then provided to the supervisor for further processing and approval. See **Table 2** for acceptance criteria. **When analyzing DOCs for DOD QSM Version 4.1, DOD limits will be used.**

<u>DOC BS Preparation</u>: Dilute 0.3 mL of the second source standard to 30 mLs with reagent water in a 70 mL polypropylene vessel. Follow SOP procedure for preparation and analysis steps.

DOC Accuracy and Precision Criteria: The four BS's for the DOC need to be within the methods recovery ranges. Duplicates should be below 20% relative percent difference.

17.0 Pollution Prevention

Quantity of chemicals purchased should be based on expected usage during its shelf-life and the disposal cost of unused material. Actual reagent preparation volumes should reflect anticipated usage and reagent stability.

18.0 Data Assessment and Acceptance Criteria for Quality Control Measures

Quality Control SOP QS05, "Data Deviations / Interpretations / Exceptions: Laboratory Non-Conformance / Corrective Action Procedures, Decision Making Guidelines for Evaluating Laboratory Analytical Sample and Quality Control Results", provides details on data assessment and acceptance criteria for Quality Control Measures. **Table 2** of this SOP provides information on QC samples, frequency, and the associated criteria specific to the performance of this method.

19.0 Contingencies for Handling out-of-control or unacceptable data

19.1 Quality Control SOP QS05, "Data Deviations / Interpretations / Exceptions: Laboratory Non-Conformance / Corrective Action Procedures, Decision Making Guidelines for Evaluating Laboratory Analytical Sample and Quality Control Results", provides details on handling out of control data. **Table 2** within this SOP also lists corrective actions associated with the failure of the various QC samples employed for the performance of this method.

19.2 CORRECTIVE ACTIONS: INSTRUMENT RELATED

19.2.1 ICV (**QCS for 245.1**)- second source not within ± 10%.

A. If the problem is with the solution, re-prepare, obtain new stock if necessary.

B. If the problem is with the calibration, recalibrate through analysis of appropriate standards and recheck ICV.

19.2.2 CCV not within ± 20% for SW846 and ±10% for (**245.1, ± 5% for initial IPC and + 10% for subsequent IPCs**)

A. If the problem is with the solution, re-prepare, obtain new stock if necessary.

B. If the problem is with the calibration, recalibrate through analysis of appropriate standards and re-prepare/reanalyze the previous ten sample according the following guidelines.

1. If the CCV was biased high, any of the previous ten samples which were below the detection limit do not require reanalysis.
2. If the CCV was biased low, the previous ten samples must be reanalyzed.

19.3 CORRECTIVE ACTION: DIGESTION RELATED

19.3.1 The preparation blank less than <1/2 RL or ±RL/CRDL for common contaminates (DOD) and ±RL/CRDL for others and CLP.

A. If the problem is with the instrument or stannous chloride.
Analyze a reagent blank to determine the stannous chloride and the instrument are behaving properly. If this check has detectable mercury, re-prepare the stannous chloride or determine if there are any problems with the instrument. Contact supervisor immediately.

B. If the problem is with the digestion.
All associated samples which are below the RL, CRDL or have a level of mercury greater than 5X the level found in the preparation blank can be reported. If the level of mercury in an associated sample is not BMDL nor greater than 5X the level found in the preparation blank, the sample must be re-digested/re-analyzed or reported as qualified. The project manager or QA manager will make this determination.

C. LCS not within control limits (or ±20%, ± 15% for **245.1**).

1. If the problem is with the instrument, reanalyze when instrument is in control if further sample bottles are available.
2. Is the problem is with the digestion.
   a. If biased low, associated samples must be re-digested.
   b. If biased high, the impact upon the data user must be evaluated. The samples will be re-digested or the data will be qualified on the final report.

19.4 CORRECTIVE ACTION: SAMPLE MATRIX RELATED

19.4.1 Replicate analysis RPD not within ±20%
The associated sample data must be qualified on the final report.

19.4.2 Spike analysis recovery not within ±25%(**± 20% for DOD projects**)

A. If the analyte level in the sample is greater than 4X the spiking level, the %recovery can not be evaluated and no action is taken.

B. If the analyte level in the sample is not greater than 4X the spiking level, the associated sample data must be qualified on the final report. TCLP extracts must be evaluated as in section XI.D.2 above. The associated sample data must be qualified on the final report.

19.4.3 When the sample matrix is so complex that viscosity, surface tension, and components can not be accurately matched with standards, the method of standard addition (MSA) is recommended. Section 8.6 of SW846-7000A provides tests to evaluate the need for using the MSA.

20.0 Waste Management

20.1 Laboratory SOP QS14 on Waste Handling discusses general guidelines for the appropriate handling of wastes and the laboratory program on waste management.

20.2 Please see Waste Disposal SOP-405, for instruction of proper disposal of waste generated from this area. Quantity of chemicals purchased should be based on expected usage

during its shelf-life and the disposal cost of unused material. Actual reagent preparation volumes should reflect anticipated usage and reagent stability.

21.0 References

21.1 *Test Methods for Evaluating Solid Waste Physical/Chemical Methods, SW-846; Third Edition (Test Methods for Evaluating Solid Waste Physical/Chemical Methods, SW-846; Third Edition (Update III)*; Method 7470A.

21.2 *USEPA Code of Federal Regulations, 40, CH 1,PT 136; Method 245.1; APX-B.*

21.3 *USEPA Contract Laboratory Program(CLP) for Inorganics ILM04.1; ILM05.2*

22.0 Tables, Diagrams, Flowcharts and Validation Data

22.1 Table 1, all applicable parameters, including the surrogates and internals with the applicable RL and lowest calibration standard.

22.2 Table 2, for all technical methods, should always be the QA/QC summary table and I am including a format for this at the end.

22.3 Table 3, Technical Completeness / Accuracy Checklist

22.4 Table 4, Data Reviewers Checklist

22.5 Validation data would be actual documentation (eg: a pdf email from a regulator explaining the approach to a method, etc.) or a side by side study performed to reach to our approach on how we handle the method.

APPENDIX:

ADDENDUM FOR USEPA SOW ILM05.2

1. The CCV concentration must be different from the ICV.

2. The same CCV shall be used throughout analysis for an SDG.

3. Calibration standards must be within 5% of the standard concentration.

4. A CRA must be analyzed after the ICV/ICB and after each batch of 20 samples, but before the final CCV/CCB. The control limit is ±30%.

5. Spike samples at 1 ug/L for water.

Table 1

Aqueous Method Detection Limits(MDL)/Detection Limit(DL), Limit of Detection(LOD) Empirical Laboratories' Reporting Limits(ERL)/Limit of Quantitation(LOQ), CLP OLM04.1 & OLM05.2 Contract Required Quantitation Limits (CRQL)					
Mercury by EPA 245.1, 7470A, SOW 4.1 & 5.2	**AQUEOUS MDL/DL (ug/L)**	**AQUEOUS LOD (ug/L)**	**AQUEOUS ERL/LOQ (ug/L)**	**AQUEOUS CRQL ILMO 4.1 (ug/L)**	**AQUEOUS CRQL ILMO 5.2 (ug/L)**
Mercury	0.080	0.16	0.20	0.20	0.20

Table 2 - Method Quality Control Requirements Summary

QC Check	Minimum Frequency / Requirements	Acceptance Criteria	Corrective Action for Failures / Data Useability
Initial calibration (ICAL)	• Daily ICAL prior to sample analysis • Low standard at the RL/LOD level	• If more than one calibration standard is used, r $\geq$ 0.995 • Must follow curve processing requirements from SOP QS08	• Re-run curve • Check instrument for maintenance needs Samples cannot be analyzed until there is a passing calibration
Second source calibration verification (ICV)	Once after each ICAL, prior to beginning a sample run.	Must be within $\pm$ 10% of true value	• Re-run ICV • Repeat ICAL
Continuing calibration verification (CCV)	• After every 10 field samples and at the end of analysis sequence.	• $\pm$ 20% of true value	• Correct problem, rerun CCV. If that fails, then repeat ICAL. Reanalyze all samples since the last successful CCV.
Method Blank (BLK)	One per prep batch	No analytes detected > ½ RL and greater that 1/10 the amount measured in any sample or 1/10 the regulatory limit (whichever is greater). Blank result must not otherwise affect sample results. For common laboratory contaminants, no analytes detected > RL	• Re-analysis to confirm the positive value • Notify the PM for further action • Re-prep of samples associated with the BLK • NCR will be required for data reported
Calibration Blank	Before beginning a sample run, after every 10 samples, and at end of the analysis sequence.	No analytes detected > LOD.	Correct problem. Re-analyze calibration blank. All samples following the last acceptable calibration blank must be reanlyzed.
BS	One per prep batch	Most stringent criteria listed within the LIMS.	• Re-analyze to confirm failed. • Re-prep and reanalyze BS and all samples in the associated prep batch for failed analytes, if sufficient sample material is available. • NCR will be required for data reported
MS	One per prep batch, if sample volume available.	Criteria listed within LIMS or specified by client.	• Follow guidelines from SOP QS05
MSD	One per prep batch, if sample volume available.	Criteria listed within LIMS or specified by client.	• Follow guidelines from SOP QS05

Table 2 - Method Quality Control Requirements Summary			
QC Check	**Minimum Frequency / Requirements**	**Acceptance Criteria**	**Corrective Action for Failures / Data Useability**
DOC Study	• Initially per analyst prior to reporting data • Annually • Follow specific guidelines from section 16 for the preparation and analysis of DOC samples	• Average percent recovery should be between 80-120%, with a 20% standard deviation.	• Re-prep and / or re-analysis
MDL Study	Once per year	• Calculated value must be less than the Spike level .	• Re-prep and / or re-analysis • Follow guidelines from SOP QS05
LOD Verification	Every quarter	• Parameter must be detected • the response must be 3-times the noise level	• Re-prep and / or re-analysis • Follow guidelines from SOP QS05
LOQ Verification	Every quarter	• Bias Requirement: Inorganics 50-150% • The LOQ value must be greater than the LOD value	• Re-prep and / or re-analysis • Follow guidelines from SOP QS05

Table 3, Technical Completeness / Accuracy Checklist

1. Were all the QC check elements analyzed – refer to Table 2 of the SOP
2. Were the QC criteria met
3. In cases of failures, was there an NCR written
4. Were dilution factors applied correctly
5. Was the data uploaded into LIMS via direct upload – if yes, then was a cross check subset of the uploaded values performed
6. If the data was entered into LIMS manually, was a check of all entered values performed
7. Was the red marked data in LIMS checked for accuracy and the corresponding hard copy data documented appropriately
8. Were proper data qualifiers applied to the data in LIMS
9. Was the hard copy package checked for completeness to include all data for the sequence such that the data reviewer could reconstruct sample analyses and validate / approve the data

Table 4, Data Reviewers Checklist (Prior to approving data)

ANALYST DATA REVIEW CHECKLIST

Sample Number(s):	
Batch Number(s):	**Sequence ID:**
Method: 7470A/245.1 (Mercury)	

QA/QC Item	Yes	No	NA	Second Level Review
1. Were samples analyzed within USACE holding times?				
2. Was initial calibration curve QC criteria met?				
3. Was all continuing calibration criteria in control?				
4. Did any sample exceed the highest calibration standard? (If yes, were appropriate dilutions made to generate samples concentration within calibration range?)				
5. Did BS meet control limits?				
6. Did MS/MSD meet control limits?				
7. Was the preparation Blank (BLK) below the project required detection limits?				
8. Did you return samples back to cold storage immediately after use?				
9. Was water bath temperature monitored/documented and did you apply the thermometer correction factor?				

10. Sample preparation information is correct and complete. _____ _____ _____ _____

11. Analytical results are correct and complete. _____ _____ _____ _____

12. The appropriate SOP's have been used and followed. _____ _____ _____ _____

14. "Raw data" including all manual integration's have been correctly interpreted. _____ _____ _____ _____

15. "Special" sample preparation and analytical requirements have been met. _____ _____ _____ _____

16. Documentation complete (e.g., all anomalies in the analytical sequence have been documented, corrective action forms are complete. _____ _____ _____ _____

Comments on any "No" response:

_____

_____

_____

_____

_____

_____

Analyst: _____ Date: _____

Second-Level Review: _____ Date: _____

EMPIRICAL LABORATORIES, LLC
STANDARD OPERATING PROCEDURE

METALS: SOP 105 REVISION #: 16 EFFECTIVE DATE: 041110

METALS
BY INDUCTIVELY COUPLED PLASMA-ATOMIC EMISSION SPECTROMETRY (ICP-AES) TECHNIQUE

References: SW-846, Method 6010B, December 1996; SW-846, Method 6010C, Revision 3 February 2007; USEPA, Method 200.7, June 1991; Standard Methods 19th Edition 2340B; 1995 USEPA CLP, ILM 04.1. See Addendum for USEPA CLPILM 05.2

APPROVALS:

Lab Director: _____ Date: 4/12/10

Data Quality Manager: _____ Date: 4/11/10

Section Supervisor: Betty DeVille Date: 4/13/10

Changes Summary

Revision 16, 04/11/10

- The SOP is an update from Revision 15 dated 05/08/09
- The SOP is formatted to include all 22-elements required per the NELAC standards
- The laboratory's revision of all technical SOPs now includes a Table of Contents that provides the map of the technical information contained within the SOP.
- Additional requirements, based upon the DoD QSM 4.1, have been integrated into the routine sample flow; however, if the requirement is different from routine sample flow, then the requirement is outlined and documented as such to be followed only when DoD samples are analyzed.

Table of Contents

1. Identification of the Test Method
2. Applicable Matrix or Matrices
3. Detection Limit
4. Scope of Application, Including components to be Analyzed
5. Summary of the Test Method
6. Definitions
7. Interferences
8. Safety
9. Equipment & Supplies
10. Reagents and Standards
11. Sample Collection, Preservation, Shipment, and Storage
12. Quality Control
13. Calibration and Standardization
14. Procedure
15. Data Analysis and Calculations
16. Method Performance
17. Pollution Prevention
18. Data Assessment and Acceptance Criteria for Quality Control Measures
19. Contingencies for Handling out-of-control or unacceptable data
20. Waste Management
21. References
22. Tables, Diagrams, Flowcharts and Validation Data

1. Identification of the Test Method

This SOP is compliant with methods – SW846 6010B, SW846 6010C, EPA 200.7, (SM 19th Edition 2340B) Hardness Calculation, (USEPA CLP) ILMO 4.1 (NJDEP does not accept CLPILM 04.1 after June, 2003) and Addendum for USEPA CLPILM 05.2.

2. Applicable Matrix or Matrices

This SOP is applicable to all matrices, including ground water, aqueous samples, TCLP, SPLP and EP extracts, industrial and organic wastes, soils, sludge samples, sediments, and other solid wastes, require digestion prior to analysis.

3. Detection Limit: Detection limits, sensitivity, and optimum ranges of the metals may be found in the ICP method file.

4. Scope of Application, Including components to be Analyzed

Each parameter that is analyzed and reported under the scope of this SOP is listed in **Table 1** of this SOP. This table also lists the associated Method Detection Limit and the Reporting Limit (also defined as the Limit of Quantitation).

5. Summary of the Test Method

5.1 Prior to analysis, samples must be solubilized or digested using appropriate Sample Preparation Methods (e.g., Methods 3005-3050 and SOW ILM 04.1/05.2). When analyzing for dissolved constituents, acid digestion is not always necessary if the samples are filtered and acid preserved prior to analysis. If particulates form after filtration and preservation the sample must be digested prior to analysis.

NOTE: When selenium is required soluble samples must always be digested.

5.2 This method describes the simultaneous multi-elemental determination of elements by ICP. The method measures element-emitted light by optical spectrometry. Samples are nebulized and the large droplets are removed by a spray chamber and the small droplets then pass through to the plasma. The solvent is evaporated. The residual sample decomposed to atoms and ions that become excited and emit characteristic light which is measured, giving a measurement of the concentration of each element type in the original sample. Background correction is required for trace element determination. Background must be measured adjacent to analyte lines on samples during analysis. The position selected for the background-intensity measurement, on either or both sides of the analytical line, will be determined by the complexity of the spectrum adjacent to the analyte line. The position used must be free of spectral interference and reflect the same change in background intensity as occurs at the analytic wavelength measured. Background correction is not required in cases of line broadening where a background correction measurement would actually degrade the analytical result. Control of the spectrometer is provided by PC based *iTEVA* software.

5.3 Inductively Coupled Argon Plasma (ICAP) primary advantage is that it allows simultaneous determination of any elements in a short time. The primary disadvantage of ICP is background radiation from other elements and the plasma gases. Although all ICP instruments

utilize high-resolution optics and background correction to minimize these interferences, analysis for traces of metals in the presence of a large excess of a single metal is difficult. Examples would be traces of metals in an alloy or traces of metals in a limed (high calcium) waste. ICP and Flame AA have comparable detection limits (within a factor of 4) except that ICP exhibits greater sensitivity for refractories (Al, Ba, etc.). Furnace AA, in general, will exhibit lower detection limits than either ICP or FAA.

5.4 It is standard procedure to use an internal standard (scandium) with samples to increase the stability of the instrument as recommended by the manufacturer (Thermo Fisher). (When samples are suspected of containing scandium, internal standard cannot be used.)

6. Definitions

Laboratory Quality System SOP QS08 "Technical / Operational Definitions, Minimum Essential Quality Control Elements, and Laboratory Calibration Procedures" provides information on the commonly used definitions.

Additional definitions specific to this SOP are listed below:

6.1 **ICP or ICAP**- Inductively Coupled Plasma or Inductively Coupled Argon Plasma.
6.2 **Inter-element correction (IEC)**- Defined as a correction factor applied by the instrument when there is an overlap of the spectrum from the plasma gases or from another metal into the spectrum of another metal causing that metals concentration to either be inflated or deflated.

7. Interferences

7.1 Spectral interferences are caused by background contribution from continuum or recombination phenomena, stray light from the line emission of high- concentration elements, overlap of a spectral line from another element, or unresolved overlap of molecular band spectra.

7.1.1. Background emission and stray light can usually be compensated for by subtracting the background emission determined by measurements adjacent to the analyte wavelength peak. Spectral scans of samples or single element solutions in the analyte regions may indicate when alternate wavelengths are desirable because of severe spectral interference. These scans will also show whether the most appropriate estimate of the background emission is provided by an interpolation from measurements on both sides of the wavelength peak or by measured emission on only one side. The locations selected for the measurement of background intensity will be determined by the complexity of the spectrum adjacent to the wavelength peak. The locations used for routine measurement must be free of off-line spectral interference (inter-element or molecular) or adequately corrected to reflect the same change in background intensity as occurs at the wavelength peak. For multivariate methods

using whole spectral regions, background scans should be included in the correction algorithm. Off-line interferences are handled by including spectra on interfering species in the algorithm.

7.1.2. To determine the appropriate location for off-line background correction, the user must scan the area on either side adjacent to the wavelength and record the apparent emission intensity from all other method analytes. This spectral information must be documented and kept on file. The location selected for background correction must be either free of off-line inter-element spectral interference or a computer routine must be used for automatic correction on all determinations. If a wavelength other than the recommended wavelength is used, the analyst must determine and document both the overlapping and nearby spectral interference effects from all method analytes and common elements and provide for their automatic correction on all analyses. Tests to determine spectral interference must be done using analyte concentrations that will adequately describe the interference. Normally, 100 mg/L single element solutions are sufficient; however, for analytes such as iron that may be found at high concentration, a more appropriate test would be to use a 200 mg/L or 500 mg/L concentration near the upper analytical range limit.

7.1.3. Spectral overlaps may be avoided by using an alternate wavelength or can be compensated by equations that correct for inter-element contributions. Instruments that use equations for inter-element correction require the interfering elements be analyzed at the same time as the element of interest. When operative and uncorrected, interferences will produce false positive determinations and be reported as analyte concentrations. More extensive information on interferant effects at various wavelengths and resolutions is available in reference wavelength tables and books. Users may apply inter-element correction equations determined on their instruments with tested concentration ranges to compensate (off line or on line) for the effects of interfering elements. Some potential spectral interferences observed for the recommended wavelength are listed in the method in table 2. For multivariate methods using whole spectral regions, spectral interferences are handled by including spectra of the interfering elements in the algorithm. The interferences listed are only those that occur between method analytes. Only interferences of a direct overlap nature are listed. These overlaps were observed with a single instrument having a working resolution of 0.035 nm.

7.1.4. When using inter-element correction equations, the interference may be expressed as analyte concentration equivalents (i.e. false analyte concentrations) arising from 100 mg/L of the interference element. For example, assume that Arsenic is to be determined (at 193.696 nm) in a sample containing approximately 10 mg/L of Aluminum. According to Table 2 from the method, 100 mg/L of Aluminum would yield a false signal for Arsenic equivalent to approximately 1.3 mg/L. Therefore, the presence of 10 mg/L of Aluminum would result in a false signal for Arsenic equivalent to approximately 0.13 mg/L. The user is cautioned that other instruments may exhibit somewhat different levels of interferences than that shown in Table 2 from the method. The

interference effects must be evaluated for each individual instrument since the intensities will vary.

7.1.5. Inter-element corrections will vary for the same emission line among instruments because of differences in resolution, as determined by the grating, the entrance and exit slit widths, and by the order of dispersion. Inter-element corrections will also vary depending upon the choice of background correction points. Selecting a background correction point where an interfering emission line may appear should be avoided when practical. Inter-element corrections that constitute a major portion of an emission signal may not yield accurate data. Users should not forget that some samples may contain uncommon elements that could contribute spectral interferences.

7.1.6. The interference effects must be evaluated for each individual instrument. For each instrument, intensities will vary not only with optical resolution but also with operating conditions (such as power, viewing height and argon flow rate). When using the recommended wavelengths, the analyst is required to determine and document for each wavelength the effect from referenced interferences as well as any other suspected interferences that may be specific to the instrument or matrix. The instrument utilizes a computer routine for automatic correction on all analyses.

7.1.7. If the correction routine is operating properly, the determined, apparent analyte(s) concentration from analysis of each interference solution should fall within a specific concentration range around the calibration blank. The concentration range is calculated by multiplying the concentration of the interfering element by the value of the correction factor being tested and divided by 10. If after the subtraction of the calibration blank the apparent analyte concentration falls outside of this range in either a positive or negative direction, a change in the correction factor of more than 10% should be suspected. The cause of the change should be determined and corrected and the correction factor updated. The interference check solutions should be analyzed more than once to confirm a change has occurred. Adequate rinse time between solutions and before analysis of the calibration blank will assist in the confirmation.

7.1.8 When inter-element corrections are applied, their accuracy should be verified, daily, by analyzing spectral interference check solutions (IFA/IFB). If the correction factors or multivariate correction matrices tested on a daily basis are found to be within 20% criteria for 5 consecutive days, the required verification frequency of those factors in compliance may be extended to a weekly basis. Also, if the nature of the samples analyzed is such they do not contain concentrations of the interfering elements at ± one reporting limit from zero, daily verification is not required. All inter-element spectral correction factors or multivariate correction matrices must be verified and updated every six months or when an instrumentation-change, such as in the torch, nebulizer, injector, or plasma conditions occurs.

Standard solution should be inspected to ensure that there is no contamination that may be perceived as a spectral interference.

7.2. Physical interferences are effects associated with the sample nebulization and transport processes. Changes in viscosity and surface tension can cause significant inaccuracies, especially in samples containing high dissolved solids or high acid concentrations. If physical interferences are present, they must be reduced by diluting the sample or by using a peristaltic pump, by using an internal standard or by using a high solids nebulizer. Another problem that can occur with high dissolved solids is salt buildup at the tip of the nebulizer, affecting aerosol flow rate and causing instrumental drift. The problem can be controlled by wetting the argon prior to nebulization, using a tip washer, using a high solids nebulizer or diluting the sample. Also it has been reported that better control of the argon flow rate, especially to the nebulizer, improves instrument performance: this may be accomplished with the use of mass flow controllers.

7.3. Memory interferences result when analytes in a previous sample contribute to the signals measured in a new sample. Memory effects can result from sample deposition on the uptake tubing to the nebulizer and from the build-up of sample material in the plasma torch and spray chamber. The site where these effects occur is dependent on the elements and can be minimized by flushing the system with a rinse blank between samples. The possibility of memory interferences should be recognized

7.4 Users are advised that high salt concentrations can cause analyte signal suppressions and confuse interference tests. When the instrument displays negative values, dilution of the samples may be necessary.

8. Safety

Laboratory SOP QS13 "Safety Program & Chemical Hygiene Plan" discusses the safety program that is to be followed lab-wide.

8.1 Normal accepted laboratory safety practices should be followed while performing this analysis.

8.1.1. Care should be used in handling all samples. Safety glasses must be worn in the lab at all times. The use of appropriate safety gloves and lab coats is highly recommended.

8.1.2 Research into expected sample content and concentration should be done in order to be prepared for additional safety considerations. Generally, any samples that need special consideration have applicable notes on the sample logs.

8.1.3 MSDS sheets are available for all reagents and standards that have been purchased. These are located in the bookshelves in the Quality Assurance Officers office.

9. Equipment & Supplies

9.1. Inductively coupled argon plasma emission spectrometer: Thermo Scientific 6500 DUO.

9.2. Computer-controlled emission spectrometer with background correction: Thermo Scientific 6500 DUO or equivalent.

9.3. Radio frequency generator compliant with FCC regulations: Thermo Fisher or equivalent.

9.4. Auto-sampler: Thermo Fisher or equivalent.

9.5. Printer capable of printing results every 4 minutes.

9.6. Cooling Water recycler.

9.7. *Iteva* software.

9.8. Argon gas supply – Liquid Argon

9.9. Class A volumetric flasks

9.10. Analytical balance - capable of accurate measurement to a minimum of three significant figures (0.001gm).

9.11. Variable Eppendorf Pipettes 1000µL; 5000µL

9.12. Disposable beakers 10, 20 and 50 mL size.

9.13. Hood system capable of venting the heat from the system off of the instrument during analysis.

10. Reagents and Standards

The laboratory's LIMS system allows for complete documentation and for the traceability of reagents and standards used within the laboratory. The following information relates to the specific reagents and standards used for the performance of the method:

10.1. Reagent Water. All references to water in the method refer to reagent grade water unless otherwise specified. Reagent water will be interference free.

10.2. Reagent grade chemicals shall be used in all tests. Unless otherwise indicated, it is intended that all reagents shall conform to the specifications of the Committee on Analytical Reagents of the American Chemical Society, where such specifications are available. Other grades may be used, provided it is first ascertained that the reagent is of sufficiently high purity to permit its use without lessening the accuracy of the determination. If the purity of a reagent is in question analyze for contamination. If the concentration is less than the MDL then the reagent is acceptable.

10.3. Hydrochloric acid (concentrated), HCl. A method blank is digested and analyzed before a new lot number of HCl is put into use, to ascertain purity. The lot # is logged into Element and the data kept on file.

10.4. Nitric acid (concentrated), HNO_3. A method blank is digested and analyzed before a new lot number of HNO3 is put into use, to ascertain purity. The lot # is logged into Element and the data kept on file.

10.5. Calibration standards

10.5.1. All standards have an acid matrix of 2% HNO_3 and 5% HCl and should be prepared using class A volumetric flasks and calibrated Eppendorfs).

10.5.2. CAL1 is the calibration blank: Reagent grade water **matrix matched as in 10.5.1. Note: when this standard is analyzed the intensities should be compared to a previous run to make sure that no contamination has occurred. Prepare this solution fresh daily.**

10.5.3. Stock QC21 solution: (100 ug/mL). Order from the manufacturer already prepared. This solution is given a unique identifier within Element and includes the following metals - Sb, As, Be, Cd, Ca, Cr, Co, Cu, Fe, Pb, Li, Mg, Mn, Mo, Ni, Se, Sr, Tl, Ti, V, and Zn.

10.5.4. Stock QC7 solution: Order from the manufacturer already prepared. This solution is given a unique identifier within Element and includes the following metals- (50 ug/mL)- silver; (100 ug/mL)- aluminum, boron, barium and sodium; (1000 ug/mL)- potassium; (500 ug/mL or 100 ug/mL note we use two sources of this standard and each have different concentrations for Si) –Silica.

10.5.5. Boron solution: (1000 ug/mL). Order from the manufacturer already prepared. This solution is given a unique identifier within Element.

10.5.6. Stock Tin solution: (10000 ug/mL). Order from the manufacturer already prepared. This solution is given a unique identifier within Element. Note: Two sources are needed.

10.5.7. Stock Silver solution: (1000 ug/mL). Order from the manufacturer already prepared. This solution is given a unique identifier within Element.

10.5.8. Stock Aluminum solution: (10000 ug/mL). Order from the manufacturer already prepared. This solution is given a unique identifier within Element. Note: Two sources are needed.

10.5.9. Stock Calcium solution: (10000 ug/mL). Order from the manufacturer already prepared. This solution is given a unique identifier. Note: Two sources are needed.

10.5.10. Stock Magnesium solution: (10000 ug/mL). Order from the manufacturer already prepared. This solution is given a unique identifier within Element. Note: Two sources are needed.

10.5.11. Stock Iron solution: (10000 ug/mL). Order from the manufacturer already prepared. This solution is given a unique identifier within Element. Note: Two sources are needed.

10.5.12. Stock Potassium solution: (10000 ug/mL). Order from the manufacturer already prepared. This solution is given a unique identifier within Element. Note: Two sources are needed.

10.5.13. Stock Barium solution: (10000 ug/mL). Order from the manufacturer already prepared. This solution is given a unique identifier within Element.

10.5.14. Stock Sodium solution: (10000 ug/mL). Order from the manufacturer already prepared. This solution is given a unique identifier within Element. Note: Two sources are needed.

10.5.15. Stock Arsenic solution: (1000 ug/mL). Order from the manufacturer already prepared. This solution is given a unique identifier within Element.

10.5.16. Stock Cobalt solution: (1000 ug/mL). Order from the manufacturer already prepared. This solution is given a unique identifier within Element.

10.5.17. Stock Chromium solution: (1000 ug/mL). Order from the manufacturer already prepared. This solution is given a unique identifier within Element.

10.5.18. Stock Copper solution: (1000 ug/mL). Order from the manufacturer already prepared. This solution is given a unique identifier within Element.

10.5.19. Stock Manganese solution: (1000 ug/mL). Order from the manufacturer already prepared. This solution is given a unique identifier within Element.

10.5.20. Stock Nickel solution: (1000 ug/mL). Order from the manufacturer already prepared. This solution is given a unique identifier within Element.

10.5.21. Stock Lead solution: (1000 ug/mL). Order from the manufacturer already prepared. This solution is given a unique identifier within Element.

10.5.22. Stock Selenium solution: (1000 ug/mL). Order from the manufacturer already prepared. This solution is given a unique identifier within Element.

10.5.23. Stock Thallium solution: (1000 ug/mL). Order from the manufacturer already prepared. This solution is given a unique identifier within Element.

10.5.24. Stock Beryllium solution: (1000 ug/mL). Order from the manufacturer already prepared. This solution is given a unique identifier within Element.

10.5.25. Stock Cadmium solution: (1000 ug/mL). Order from the manufacturer already prepared. This solution is given a unique identifier within Element.

10.5.26. Stock Antimony solution: (1000 ug/mL). Order from the manufacturer already prepared. This solution is given a unique identifier within Element.

10.5.27. Stock Molybdenum solution: (1000 ug/mL). Order from the manufacturer already prepared. This solution is given a unique identifier within Element.

10.5.28. Stock Strontium solution: (1000 ug/mL). Order from the manufacturer already prepared. This solution is given a unique identifier within Element.

10.5.29. Stock Titanium solution: (1000 ug/mL). Order from the manufacturer already prepared. This solution is given a unique identifier within Element.

10.5.30. Stock Vanadium solution: (1000 ug/mL). Order from the manufacturer already prepared. This solution is given a unique identifier within Element.

10.5.31. Stock Zinc solution: (1000 ug/mL). Order from the manufacturer already prepared. This solution is given a unique identifier within Element.

10.5.32. Stock Scandium solution (10000 ug/mL). Order from the manufacturer already prepared. This solution is given a unique identifier within Element.

10.6. Calibration and Calibration Verification standards

10.6.1. The calibration standards and calibration verification standards preparations are recorded in Element. Please find method of preparation in Appendix I.

10.6.2. The CRL solution is analyzed to check the accuracy of the instrument at the reporting limit. The stock standard solutions A and B are prepared from single element standards listed in 10.5 above. Please find method of preparation in Appendix I. This solution is stable for 6 months. The working solutions are made up as needed or every 3 months as follows: Prepared by adding 1.0 ml of RL Stock solution A and 1.0 ml of RL Stock Solution B to de-ionized water with 2% HNO3 and 5% HCL matrix and diluting to 100 mLs , mix well. This solution is stable for 3 months.

10.6.3. The interference check standard solutions (IFA and IFB) are prepared to provide an adequate test of the IECs. A purchased solution containing 500

ug/mL Al, Ca, Mg and 200 ug/mL Fe is diluted 10x to prepare the IFA. The IFB is prepared by diluting 100x a purchased solution containing 10 ug/mL of As and Tl; 20 ug/mL Ag; 50 ug/mL Ba, Be, Cr, Co, Cu, Mn, and V; 100 ug/mL Cd, Ni and Zn; 5 ug/mL Pb and Se; and 60 ug/L Sb. Add to this a purchased solution containing 500 ug/mL Al, Ca, Mg and 200 ug/mL Fe diluted 10x. These solutions are prepared as needed or monthly and assigned an Element # for traceability.

10.7 Digestion standards

10.7.1 The Blank Spike (BS) is prepared from High Purity solutions CLP-CAL-1 solution A and B; CLP-CAL-2 and CLP-CAL-3. 0.50 mL of CLP-CAL-1 A and B; and 0.50 mLs of the 1000 ug/mL single element standards for Molybdenum, Boron, Titanium and Strontium is diluted to 500 mL with 0.125 mL of CLP-CAL-2 and CLP-CAL-3 and 0.050 mLs of 10000 ug/mL Tin. 25 mL of HCl and 10 mL of HNO3 are added for preservation. This solution is stored in a Teflon bottle. A portion is reserved in case of a problem with digestion. When there is a problem with the analysis of the BS the solution is checked first before action is taken to make sure that it was made properly and has not deteriorated since it was made up. This solution is given a unique identifier within Element. The BS is prepared from a source independent from that used in the calibration standards. This solution is prepared daily or as needed. 50 mLs of this solution is used for digestion for normal level water samples and the sample is brought back to 50 mLs after digestion. Low level water samples start with two 50 mLs vials with only 1.0 mL of the stock blank spike solution in each taken to 50 mLs. The samples are cooked down to below 25 mLs and combined and then cooked down to below 25 mLs again and then brought back to 25 mLs. This low level BS is given a unique identifier in Element.

10.7.2. The solid BS used with soil samples is prepared by weighing up 1.0 gram of Teflon chips for regular level and 2.0 grams of Teflon chips for low level and spiking using the same spiking solutions used to spike the sample matrix. This standard is given a unique identifier i.e. Batch #-BS1. Note: Amount of spiking solution used varies according to whether the samples are being digested for normal level or low level soils. See spiking solutions in 10.7.3.1 for how to prepare the BS for a solid sample, it is prepared the same way that a soil spike is prepared only the known amounts of metals are added to laboratory water.

10.7.3. The spiking solutions are prepared as follows:

10.7.3.1.Stock Multi-element Spiking Solutions: High Purity <u>CLP-CAL-1 solution A</u>: 2000 ug/mL Al and Ba; 50 ug/mL Be; 200 ug/mL Cr; 500 ug/mL Co, Mn, Ni, V and Zn; 250 ug/mL Cu; 1000 ug/mL Fe; 5000 ug/mL Ca, Mg, K and Na; <u>solution B</u>: 250 ug/mL Ag; <u>CLP-CAL-2</u>: 1000 ug/L Sb; <u>CLP-CAL-3</u>: 1000 ug/mL As, Pb, Se, Tl; 500 ug/mL Cd. Order from the manufacturer already prepared. These solutions are given a unique identifier within Element. Add 0.050 mL for water samples and 0.20 mL for normal level soil samples and 0.10 for low

level soil samples of CLP-CAL-1 solutions A and B, and 0.0125 mL for water samples and 0.05 mLs for normal level soil samples and 0.025 mLs for low level soil samples of CLP-CAL-2 and 3 to 50 mL of sample for water samples and 1gram of sample for normal level soils and 2 grams of sample for low level soils for the following spike values: 2000 ug/L Al and Ba; 50 ug/L Be; 200 ug/L Cr; 500 ug/L Co, Mn, Ni, V and Zn; 250 ug/L Cu; 1000 ug/L Fe; 5.0 mg/L Ca, Mg, K and Na, 250 ug/L Ag, Sb, As, Pb, Se and Tl; 125 ug/L Cd. A blank spike should be prepared at the time the samples are spiked to check the actual spike value and accuracy.

10.7.3.2. TCLP Spiking Solution: Use 0.50 mL diluted to 50 mL for digestion:
2.5 mL 10000 mg/L Ba stock standard diluted to 100 mL; 2.5 mL Cr, Pb and As 1000 mg/L stock standard diluted to 100 mL; 0.50 mL Cd and Se diluted to 100 mL . Store in a Teflon bottle. A blank spike should always be prepared at the same time a sample is being spiked. This solution should produce a spike value of 2500 ug/L Ba; 250 ug/L Cr, Pb and As; and 50 ug/L of Cd and Se. Note: Since the samples are diluted 10x when digested the spike value will appear to be 10x greater when analyzed.

10.7.3.3. TCLP Silver Spiking Solution: Use 5.0 mL diluted to 50 mL for digestion:
0.40 mL of 1000 mg/L stock Ag solution diluted to 200 mL. Store this solution in a Teflon bottle. A blank spike should always be prepared at the same time a sample is being spiked. This solution should produce a spike value of 200 ug/L. Note: Since the samples are diluted 10x when digested the spike value will appear to be 10x greater when analyzed. Also this solution is not very stable and may require fresh preparation at least weekly.

11. Sample Collection, Preservation, Shipment, and Storage

Quality Systems SOP QS10 related to Sample Receipt, Handling, & Processing provides details for collection, preservation, shipment, and storage.

11.1. Preliminary treatment of most matrices is necessary because of the complexity and variability of sample matrices. Water samples which have been pre-filtered and acidified will not need acid digestion as long as the samples and standards are matrix matched and particulates do not form after the filtration and preservation take place. Solubilization and digestion procedures are presented in Sample Preparation Methods (Methods 3005A-3050A).

11.2. Sample digestates are stored at room temperature for at least 2 months unless a longer time is requested by the client. The samples contain an acid matrix of 3:1. All metal samples are neutralized before disposal in the receiving section of the laboratory.

11.3. **The appropriate SOPs should be consulted regarding sample preparation.** The following is a brief summary of the methods we use for metals preparation.

11.3.1. Method 3005A prepares groundwater and surface water samples for total recoverable and dissolved metals determination by ICP. The unfiltered or filtered sample is heated with dilute HCl and HNO_3 prior to metal determination.

11.3.2. Method 3010A prepares waste samples for total metal determination by ICP. The samples are vigorously digested with a mixture of nitric acid and hydrochloric acid followed by dilution with laboratory water. The method is applicable to aqueous samples, TCLP and mobility-procedure extracts.

11.3.3. Standard Methods 19th Edition Method 3030C prepares ground-waters and surface water samples for acid extractable metals: (lead and chromium.) This preparation has a holding time of 72 hours. The samples are preserved at collection with 5mL/L of HNO3, in the laboratory 5 mL/100mL of 1+1 HCl is added and the sample is heated for 15 minutes in a block digester. The sample is filtered through a membrane filter and the filtrate is carefully transferred to a volumetric flask and brought back to 100 mLs.

11.3.4. Method 3050B prepares wastes samples for total metals determination by ICP. The samples are vigorously digested in nitric acid and hydrogen peroxide followed by dilution with either laboratory water or hydrochloric acid and laboratory water. The method is applicable to soils, sludges, and solid waste samples.

12. Quality Control

Quality Systems SOP QS08 "Technical / Operational Definitions, Minimum Essential Quality Control Elements, and Laboratory Calibration Procedures" outlines details related to laboratory wide protocols on quality control.

12.1. **Daily run and batch QC**

12.1.1. Calibration is required daily. Either a blank and a high standard or a client specific three standard concentration points and a blank calibration is required daily.

12.1.2. IEC correction standards for aluminum and iron are required daily.

12.1.3. ICV within ±5% for 200.7 and within ±10% for all other methods.

12.1.4. ICB/CCB less than two times ± MDL or less than ± LOD for DOD. The ICB/CCB must immediately follow the ICV/CCV.

12.1.5. RL standard run against the curve within ±20% initially and client specific requirement of ±30% at the end of the analysis.

12.1.6. IFA/IFB analyzed daily. IFA must be less than two times ±MDL or less than ±LOD unless verified standard contamination for DOD. The IFB must recover within ±20% for all analytes in the IFB standard solution. If the IFA/IFB solution is not within the required limits- if possible reanalyze all associated samples, if not possible to reanalyze all associated samples must be flagged with an "Q" on the final report for DOD.

12.1.7. CCV must be analyzed every ten samples or at the end of the analysis within ±10% or the samples are reanalyzed if possible. If samples cannot be reanalyzed, all samples are flagged with a "Q" for DOD.

12.1.8. CCB must be analyzed every ten samples immediately following the CCV or at the end of the analysis less than two times ±MDL or <±LOD for DOD. If the CCB is out of the allowable range the samples are flagged with "B".

12.1.9. *The following should be analyzed with each preparation batch containing a matrix spike.*

- Serial dilution: If the analyte concentration is sufficiently high (minimally, a factor of 50 above the instrumental detection limit after dilution), an analysis of a 1:4 dilution (volumetric glassware must be used) should agree within ±10% of the original determination. If not, a chemical or physical interference effect should be suspected. The analyst and or section manager must note this situation on the final analytical report.

- Post digestion spike addition: An analyte spike added to a portion of a prepared sample, or its dilution, should be recovered to within 75% to 125% of the known value for SW6010B and 80 to 120% for SW6010C and is required especially if the pre-digestion matrix spike is outside of control limits. The spike addition should produce a minimum level of 10 times and a maximum of 100 times the instrumental detection limit. If the spike is not recovered within the specified limits, a matrix effect should be suspected. Run all associated samples in the preparatory batch by method of standard additions (MSA) or apply "J" flag. The analyst and or section manager must note this situation on the final analytical report. Apply "J" flag if the post spike is outside the range of 75 to 125% for 6010B or 80 to 120% for 6010C.

12.2 Quarterly and/or every six months

12.2.1. Linear range standards must be analyzed at a frequency no less than once every six months. The linear range standard is required for verification that samples are actually linear to the degree claimed. The analyst is responsible for completing this task in a timely manner. The linear range standard must be within +/-10% of true value. This standard can be analyzed as the linear dynamic range.

12.2.2. The inter-element correction factors (IEC) should be verified at the time the linear range standards are analyzed or whenever there is any question about whether an IEC is correcting correctly.

12.2.3. IDL's, linear range and IEC checks must be performed quarterly if straight CLP work is required.

12.3. Digested Batch QC

12.3.1. All quality control data should be maintained and available for easy reference or inspection.

12.3.2. Employ a minimum of one method blank per sample batch to determine if contamination or any memory effects are occurring. A method blank (BLK), sometimes referred to as the preparation blank is a volume of reagent water acidified with the same amounts of acids as were the standards and samples. These blanks are taken through the same digestion/preparation steps as the sample being tested. The result for the method blank should not indicate contamination greater than ± ½ RL for DOD or ±RL/CRDL for other or CLP. If exceeded, the impact upon the data should be evaluated and the associated sample(s) should be either re-digested or the data should be qualified. The extracted blank associated with TCLP batches must be less than 100 X the regulatory limit for barium.

12.3.3. Employ a minimum of one blank spike (BS) for aqueous samples or one Teflon chip spiked sample per sample batch to verify the digestion procedure. These blank spikes are taken through the same digestion/preparation steps as the sample being tested. The control limits are ±15% method 200.7 - aqueous and soil samples or ±20% for all other methods aqueous and soil samples. If the BS is not in control, the impact upon the client data should be evaluated and the associated sample(s) should be re-digested. Consult your supervisor for further action. Qualifying the associated data may not be permissible for some clients.

12.4. Sample

12.4.1. Analyze one replicate sample for every twenty samples or per analytical batch, whichever is more frequent. A replicate sample is a sample brought through the whole sample preparation and analytical process in duplicate. It is acceptable to substitute a matrix spike duplicate for the sample replicate. Project specific requirements will take precedence in these situations. NJDEP demands that this requirement be met with a client specific duplicate rather than a spike duplicate. The control limits are less than or equal to 20% RPD (if both are >5x RL) or ± the RL (if either are <5X RL). Supervisor must be notified if the control limit is not met. Supervisor will dictate corrective action if required. The final analytical report must document this situation. Apply "J" flag for DOD if acceptance criteria are not met. Apply "*" flag for CLP and other work if acceptance criteria are not met.

12.4.2. Analyze a minimum of one spiked sample and/or spiked sample duplicate for every twenty samples or per analytical batch, whichever is more frequent. Project

specific requirements will take precedence in determining whether a matrix spike duplicate is employed in these situations. If the analyte level in the sample is not greater than 4X the spiking level, the spike recoveries should be within ±20% of the true value. If not, and sufficient sample volume exist, a post digestion spike should be analyzed. Apply "J" flag for DOD if acceptance criteria are not met. Apply "N" flag or CLP and other work if acceptance criteria are not met.

13. Calibration and Standardization

Quality Systems **SOP QS08 "**Technical / Operational Definitions, Minimum Essential Quality Control Elements, and Laboratory Calibration Procedures" related to Calibration Procedures provides laboratory wide protocols for calibration and standardization.

13.1. Set up the instrument with proper operating parameters. The instrument must be allowed to become thermally stable before beginning (usually requiring at least 30 minutes of operation prior to calibration).

13.2. Operating conditions - **The instrument settings can be found in method file within the iTEVA software.** For operation with organic solvents, use of the auxiliary argon inlet is recommended, as are solvent-resistant tubing, increased plasma (coolant) argon flow, decreased nebulizer flow, and increased RF power to obtain stable operation and precise measurements. Sensitivity, instrumental detection limit, precision, linear dynamic range, and interference effects must be established for each individual analyte line on that particular instrument. The analyst must (1) verify that the instrument configuration and operating conditions satisfy the analytical requirements and (2) maintain quality control data confirming instrument performance and analytical results.

13.3. Auto-peak when some change has been made to the introductory system and calibrate the instrument according to the instrument manufacturers recommended procedures, using the specified calibration standard solutions. Flush the system with 2% HNO_3 / 5% HCl between each standard or as the manufacturer recommends. (Use the average intensity of multiple exposures for both standardization and sample analysis to reduce random error.) The calibration curve consists of a blank and three standards ($r \geq 0.998$). If a three point calibration curve is not required for the client samples being analyzed by Empirical Laboratories may use a blank and one standard as referenced in USEPA - CLP protocols.

13.4. Before beginning the sample run, analyze single element Iron and Aluminum standards at their linear range to check for IEC drifts. Analyze these standards first as QC samples with an IEC check table and action taken should be to calculate IECs using the iTEVA software. Make sure to rinse thoroughly after running these linear range standards, they can cause carry over into the initial QC samples which are analyzed next. The analysis order follows as: ICV (± 10%) for 200.7 (± 5%) and ICB (< ±2xMDL, <±LOD-DOD or ±RL/CRDL for others or CLP, first, then analyze a reporting limit standard (a standard at the concentration of the reporting limit). This standard should be within ±20% for DOD projects and ±30% for samples analyzed for 6010C. Then reanalyze the

highest mixed calibration standard(s) as if it were a sample. Concentration values obtained should not deviate from the actual values by more than 5%. If they do, follow the recommendations of the instrument manufacturer to correct for this condition. Note: Supervisor must be notified if the control limit is not met. Supervisor will dictate corrective action if required. The final analytical report must document this situation.

13.5. For **CLP projects**, verify the validity of the curve in the region of 2x the contract required detection limit (CRDL) before and after each batch of 20 samples in the specific order of CRI, ICSA, ICSAB, CCV and CCB (CCB criteria: < ±MDL or ±RL/CRDL for others or CLP, or twice during every 8-hour work shift, whichever is more frequent. Results should be within ±20%. Supervisor must be notified if the control limit is not met. Supervisor will dictate corrective action if required. The final analytical report must document this situation. (For Internal QC)

13.6. Verify the inter-element and background correction factors at the beginning of the sequence in the specific order of IFA, IFB, CCV and CCB (IFA criteria: non-spiked analytes < ±2xMDL or <±LOD for DOD beginning of sequence**.** Do this by analyzing the interference check solution IFA and IFB. Absolute value of concentration for all non-spiked analytes in the IFA must be <LOD (unless they are verified trace impurity from one of the spiked analytes) for DOD. Results must be within ±20% of the true value for IFB. If corrective action fails, apply Q-flag to all results for specific analyte(s) in all samples associated with the ICS. (CRI, ICSA and ICSAB required at the end for CLP projects only).

Note: Supervisor must be notified if the control limit is not met. Supervisor will dictate corrective action if required. The final analytical report must document this situation.

13.7. The instrument must be calibrated once every 24 hours.

13.8. Instrument Autosampler Report example:

Calibration Rack (used by instrument software to insert QC)

1) Cal Std 1 (blank)
2) Cal Std 2 (Low Cal)
3) Cal Std 3 (Mid Cal)
4) Cal Std 4 (Ba @ 5000 ppb)
5) Cal Std 5 (QC5)
6) Cal Std 6 (QC 21)
7) Cal Std 7 (NAK 100)
8) Cal Std 8 (QC3)
9) Cal Std 9 (Ag)
10) Al IEC-(correction using ITEVA software)
11) Fe IEC-(correction using ITEVA software)

Sample Sequence RACK 1

1) SEQ-ICV
2) SEQ-ICB
3) SEQ-CRL1-reporting limit standard 1
4) SEQ-CRL2-reporting limit standard 2
5) Ba@ 5000 ppb (readback)
6) QC5
7) NAK High-(readback)
8) QC 21 High-(readback)
9) Salt Cal at 500 ppm (readback)
10) Rinse
11) SEQ-IFA1
12) SEQ-IFB1
13) Rinse
14) SEQ-CCV
15) SEQ-CCB
16) Method Blank (*Batch #* -BLK1)
17) Blank Spike (*Batch #* -BS1)
18) Sample 1
19) Sample 2
20) Sample 3
21) Sample 4
22) Sample 5
23) Sample 6
24) Sample 7
25) Sample 8
26) Sample 9
27) Sample 10
28) SEQ-CCV
29) SEQ-CCB
30) Sample 11
31) Sample 12
32) Sample 13
33) Sample 14
34) Sample 15
35) Sample 16
36) Sample 17
37) Sample 18
38) Sample 19
39) Sample 20
40) Sample matrix spike (*batch#*- MS1)
41) Sample matrix spike duplicate (*batch#* -MSD1)
42) Sample post digestion spike (*batch#* -PS1)
43) Sample serial dilution (*batch#* -DUP1)
44) SEQ-CCV

45) SEQ-CCB
46) Preparation Blank (*batch#* -BLK1)
47) Blank Spike (*batch#* -BS1)
48) Sample 1
49) Sample 2
50) Sample 3
51) Sample 4
52) Sample 5
53) Sample 6
54) Sample 7
55) Sample 8
56) Sample 9
57) Sample10
58) SEQ-CCV
59) SEQ-CCB
60) Sample 11

RACK 2

1) Sample 12
2) Sample 13

Etcetera…

Each rack holds 60 samples and there are 4 racks that are used for samples, CCVs and CCBs and run QC.

14. Procedure

14.1. Once the instrument has been calibrated, begin the analysis of samples.

14.2. If particulates are visible in the digestate, the sample must be filtered prior to analysis. If filtration is required, a filter blank must be prepared by filtering reagent grade water which has been properly acidified. **In the event USACE samples are filtered, all USACE samples and the QC samples in that QC batch must be filtered. All USACE solid samples and their associated batch QC samples must be filtered prior to analysis.**

14.3. Flush the system with 2% HNO_3 / 5% HCl for at least 1 minute before the analysis of each sample.

14.4. Dilute and reanalyze samples that are more concentrated than the linear calibration limit or, for 200.7, $\pm$ 10% of the linear range standard. **In the case of USACE samples, the criterion changes and requires dilution and reanalysis of all samples which produce a concentration that exceeds the highest calibration standard. Sample results detected between the MDL and LOQ are flagged as estimated with a "J" flag.**

14.5. Verify calibration every 10 samples or every 2 hours, whichever is more frequent and at the end of the analytical run, using a continuing calibration verification (CCV) sample and a continuing calibration blank (CCB) sample.

14.5.1. The results of the CCV are to agree within ±10% for 6010 (5% for 200.7) on initial verification of the expected value, with relative standard deviation (RSD) < 5% from 3 replicates (minimum of three integrations). If not, terminate the analysis, correct the problem, and reanalyze the previous ten samples. The analyst may continue the analytical run, and after conferring with the section manager it may be necessary to reanalyze a group of samples. The analyst must notify the section manager within 24 hours.

14.5.2. The results of the calibration blank (this is not the method/preparation blank) are to be < 2x ±MDL, for CLP <RL, for **DOD no analytes detected >±LOD**. If the calibration blank is not in control, evaluate the impact upon the previous 10 samples. Reanalysis may be required after an evaluation of the data. If the blank < 1/10 the concentration of the action level of interest and no sample is within 10% of the action limit, samples need not be reanalyzed. One must also evaluate the reporting limit (RL) as it relates to 3X the IDL/MDL. If the RL is significantly above 3X IDL or MDL then reanalysis may not be required (Na, K, Mg and Ca are good examples of this situation).

14.6. Demonstration of Capability (DOC) – Each analyst must perform a DOC to demonstrate proficiency with this method. Refer to SOP-413 for guidance.

15. Data Analysis and Calculations

Quality Systems SOP QS09 "General and commonly used Laboratory Calculations" provides details on general calculations used throughout the laboratory.

15.1. Total hardness is reported from HNO_3 preserved sample. The final concentration is calculated from the calcium and magnesium results as follows: Ca mg/L x 2.5 + Mg mg/L x 4.1 = total Hardness in mg/L as $CaCO_3$.

15.2. The instrument will generate data results in mg/L or µg/L (labeled appropriately). Each result represents an average of three individual readings per metal channel.

15.3. For aqueous samples, if a post/pre-digestion dilution is performed, the result must be multiplied by this factor or the dilution factor must be entered into the instrument data table in which case the instrument will generate data corrected for the dilution.

15.4. For solid samples, if a post-digestion dilution is performed, the result must be multiplied by this factor or the dilution factor must be entered into the instrument data table in which case the instrument will generate data corrected for the dilution. Also, the result must be converted to reporting units which are usually mg/kg.

SR (ug/g or mg/kg) = IR*DF*FED/SM

SR = Sample result
IR = Instrument result (µg/L)
DF = Dilution factor (post digestion)
FED = Final volume of digestate (L)
SM = Sample mass digested (g)

16. Method Performance

Demonstration of Capability (DOC): Each analyst must perform a DOC prior to reporting data. The analyst must prepare (for prep technicians) and analyze (analysts reviewing and reporting data) 4-LCS samples. The data is calculated for accuracy and precision requirements. The DOC form, as listed within section 2.5 of the Quality Manuel is completed by each analyst and then provided to the supervisor for further processing and approval.
DOC LCS Preparation: See BS preparation under 10.7.1 through10.7.3 above.
DOC Accuracy and Precision Criteria: The LOD is analyzed at 2 times the MDL and must result in an concentration 3 times the noise. The LOQ is analyzed at the RL or 2 times the RL and must be recovered within ±50%.

17. Pollution Prevention:
Quantity of chemicals purchased should be based on expected usage during its shelf-life and the disposal cost of unused material. Actual reagent preparation volumes should reflect anticipated usage and reagent stability.

18. Data Assessment and Acceptance Criteria for Quality Control Measures

Quality Control SOP QS05, "Data Deviations / Interpretations / Exceptions: Laboratory Non-Conformance / Corrective Action Procedures, Decision Making Guidelines for Evaluating Laboratory Analytical Sample and Quality Control Results", provides details on data assessment and acceptance criteria for Quality Control Measures. Table 2 of this SOP provides information on QC samples, frequency, and the associated criteria specific to the performance of this method.

19. Contingencies for Handling out-of-control or unacceptable data
Quality Control SOP QS05, "Data Deviations / Interpretations / Exceptions: Laboratory Non-Conformance / Corrective Action Procedures, Decision Making Guidelines for Evaluating Laboratory Analytical Sample and Quality Control Results", provides details on handling out of control data. Table 2 within this SOP also lists corrective actions associated with the failure of the various QC samples employed for the performance of this method.

CORRECTIVE ACTIONS

19.1. INSTRUMENT RELATED

19.1.1. ICV not within ± 10% or ± 5% for 200.7
a. Is the problem with the solution?
i. Re-prepare or obtain new stock.

b. Is the problem with the calibration?
   i. Recalibrate through analysis of appropriate standards and recheck ICV.

19.1.2. ICB not ±MDL or within ± 3X IDL or CRDL for CLP, **DOD no analytes detected >LOD**

a. Is the problem with the solution?
   i. Re-prepare
b. Is the problem with the calibration?
   i. Recalibrate with the blank solution or the low level standard. Restart analysis with the ICV.

19.1.3. Check standards not within ± 5%
a. Is the problem with the solution?
   i. Re-pour, re-prepare or obtain new stock.
b. Is the problem with the calibration?
   i. Recalibrate thru analysis of appropriate standards. Restart analysis with the ICV.

19.1.4. CLP only-CRI not within ± 20% (Internal QC, only required for CLP work).
a. Is the problem with the solution?
   i. Re-prepare or obtain new stock.
b. Is the problem with the calibration?
   i. Recalibrate thru analysis of appropriate standards. Restart analysis with the ICV.

19.1.5. IFA metals not present are not less than the detection limit for that metal, **for IFA DOD, absolute value of concentration for all non-spiked analytes <±LOD.**
a. Is the problem with the solution?
   i. Re-prepare or obtain new stock.
b. Is the problem with the calibration?
   i. Recalibrate thru analysis of appropriate standards. Restart analysis with the ICV.

19.1.6. IFB not within ± 20%
a. Is the problem with the solution?
   i. Re-prepare or obtain new stock.
b. Is the problem with the calibration?
   i. Recalibrate thru analysis of appropriate standards. Restart analysis with the ICV.

19.1.7. CCV not within ± 10%
a. Is the problem with the solution?
   i. Re-prepare or obtain new stock.
b. Is the problem with the calibration?
   i. If appropriate, continue the analysis. Discuss effect of the out of control situation with your supervisor. The samples will be reanalyzed or the data will be qualified.

19.1.8.. CCB not ±2xMDL or CRDL for CLP, DOD no analytes detected >±LOD.

a. Is the problem with the solution?
   i. Re-prepare
b. Is the problem with the calibration?
   i. Re-calibrate and reanalyze.

19.2. DIGESTION RELATED

19.2.1. Preparation blank (BLK) not within ± ½ RL and ± RL for common contaminants DOD or RL/CRDL for other or CLP

a. Is the problem with the instrument?
   i. Evaluate with respect to instrumental bias or reanalyze when instrument is in control.
b. Is the problem with the digestion?
   i. If associated samples are less than 10X the level of the preparation blank but above the RL, the sample must be re-digested or the data must be qualified on the final report.

19.2.2. BS not within control limits

a. Is the problem with the instrument?
   i. Evaluate with respect to instrumental bias or reanalyze when instrument is in control.
b. Is the problem with the digestion?
   i. If biased low, associated samples must be re-digested.
   ii. If biased high, the impact upon the data user must be evaluated. The samples will be re-digested or the data will be qualified on the final report.

19.3. SAMPLE MATRIX RELATED

19.3.1. Replicate analysis RPD not within ±20% (if both are >5X CRDL) or ± the CRDL (if either are <5X CRDL).

a. The associated sample data must be qualified on the final report.

19.3.2. Spike analysis recovery not within ±20%.

a. Is the analyte level in the sample greater than 4X the spiking level?
   i. If yes, the spike recovery is not evaluated.
   ii. If no, a post digestion spike must be analyzed and the associated sample data must be qualified on the final report.

19.3.3. When required, post digestion spike analysis recovery not within ±25% for SW6010B, DOD or ± 20% SW6010C.

a. The associated sample data must be qualified on the final report.
b. For USACE analysis by MSA is required.

19.3.4. Serial dilution analysis percent difference not within ±10%

a. Is the analyte concentration a factor of 50 above the instrumental detection limit after dilution?

i. If no, the serial dilution data can not be evaluated.

iii. If yes, a chemical or physical interference effect should be suspected. The analyst and or section manager must note this situation on the final analytical report.

20. **Waste Management**

Laboratory SOP QS14 on Waste Handling discusses general guidelines for the appropriate handling of wastes and the laboratory program on waste management.

21. **References**

21.1. *Test Methods for Evaluating Solid Waste Physical/Chemical Methods, SW-846; Third Edition (Update III)*; Method 6010B and Method 6010C.

21.2. USEPA *Code of Federal Requlations, 40, CH 1,PT 136;* Method 200.7; APX-B.

21.3. USEPA *Contract Laboratory Program (CLP) for Inorganics ILM04.1; ILM05.2*

21.4. DOD Quality Systems Manual for Environmental Laboratories Version 4.1. (Based on NELAC Voted Revision June 5, 2003. 4/22/09

22. **Tables, Diagrams, Flowcharts and Validation Data**

Table 1 contains all applicable parameters with the applicable RL/LOQ, LOD and Detection Limit.

Table 1A, contains a list of the wavelengths used for each analyte.

Table 2, for all technical methods, contains the QA/QC summary table.

Table 3, Technical Completeness / Accuracy Checklist

Table 4, Data Reviewers Checklist

Table 1 Water				
Analyte	MDL	LOD	MRL	Units
Aluminum	50.0	100	200	ug/L
Antimony	5.00	8.00	15.0	ug/L
Arsenic	3.00	6.00	10.0	ug/L
Barium	5.00	10.0	40.0	ug/L
Beryllium	1.00	2.00	5.00	ug/L
Boron	10.0	20.0	30.0	ug/L
Cadmium	1.00	2.00	5.00	ug/L
Calcium	1000	2000	5000	ug/L
Chromium	2.00	4.00	10.0	ug/L
Cobalt	5.00	10.0	12.5	ug/L
Copper	4.00	8.00	10.0	ug/L
Iron	30.0	60.0	100	ug/L
Lead	1.50	3.00	3.00	ug/L
Magnesium	1000	3000	5000	ug/L
Manganese	3.00	6.00	15.0	ug/L
Molybdenum	5.00	10.0	15.0	ug/L
Nickel	3.00	6.00	10.0	ug/L
Potassium	1000	3000	5000	ug/L
Selenium	3.00	5.00	6.00	ug/L
Silver	1.00	2.00	10.0	ug/L
Sodium	1000	3000	5000	ug/L
Thallium	3.00	4.00	8.00	ug/L
Tin	10.0	20.0	30.0	ug/L
Titanium	5.00	10.0	15.0	ug/L
Vanadium	5.00	10.0	12.5	ug/L
Zinc	5.00	10.0	20.0	ug/L

Table 1 TCLP				
Analyte	MDL	LOD	MRL	Units
Antimony	0.00500	0.00800	0.0150	mg/L
Arsenic	0.00300	0.00600	0.0100	mg/L
Barium	0.00500	0.0100	0.0400	mg/L
Cadmium	0.00100	0.00200	0.00500	mg/L
Chromium	0.00200	0.00400	0.0100	mg/L
Copper	0.00400	0.00800	0.0100	mg/L
Lead	0.00150	0.00300	0.00300	mg/L
Selenium	0.00300	0.00500	0.00600	mg/L
Silver	0.00100	0.00200	0.0100	mg/L

Table 1 Soil				
Analyte	MDL	LOD	MRL	Units
Aluminum	10.0	20.0	40.0	mg/Kg
Antimony	1.00	1.60	3.00	mg/Kg
Arsenic	0.600	1.20	2.00	mg/Kg
Barium	1.00	2.00	8.00	mg/Kg
Beryllium	0.200	0.400	1.00	mg/Kg
Boron	2.00	4.00	6.00	mg/Kg
Cadmium	0.200	0.400	1.00	mg/Kg
Calcium	200	400	1000	mg/Kg
Chromium	0.400	0.800	2.00	mg/Kg
Cobalt	1.00	2.00	2.50	mg/Kg
Copper	0.800	1.60	2.00	mg/Kg
Iron	6.00	12.0	20.0	mg/Kg
Lead	0.300	0.600	0.600	mg/Kg
Magnesium	200	600	1000	mg/Kg
Manganese	0.600	1.20	3.00	mg/Kg
Molybdenum	1.00	2.00	3.00	mg/Kg
Nickel	0.600	1.20	2.00	mg/Kg
Potassium	200	600	1000	mg/Kg
Selenium	0.600	1.00	1.20	mg/Kg
Silver	0.200	0.400	2.00	mg/Kg
Sodium	200	600	1000	mg/Kg
Thallium	0.600	0.800	1.60	mg/Kg
Tin	2.00	4.00	6.00	mg/Kg
Titanium	1.00	2.00	3.00	mg/Kg
Vanadium	1.00	2.00	2.50	mg/Kg
Zinc	1.00	2.00	4.00	mg/Kg

TABLE 1A

METAL	WAVELENGTH
Aluminum	396.1
Antimony	206.8
Arsenic	189.0
Barium	233.5
Beryllium	313.0
Boron	249.7
Cadmium	228.8
Calcium	317.9
Chromium	267.7
Cobalt	228.6
Copper	324.7
Iron	261.1
Lead	220.3
Magnesium	279.0
Manganese	257.6
Molybdenum	202.0
Nickel	231.6
Potassium	766.4
Selenium	196.0
Silver	328.0
Sodium	589.5
Strontium	421.5
Thallium	190.8
Tin	189.9
Titanium	334.9
Vanadium	292.4
Zinc	206.2

Table 2 - Method Quality Control Requirements Summary			
QC Check	**Minimum Frequency / Requirements**	**Acceptance Criteria**	**Corrective Action for Failures / Data Useability**
Interference Check	• once per calibration	• IFA less than LOD if not verified contamination of standard. IFB must be within ±20%.	• Check IEC corrections for metals in the IFA.
Calibration Curve	• Prior to analyzing any samples • A minimum of a blank and 3-points for linear fits client specific requirement or a blank and high standard. • Low standard at the RL level run against the curve within 20% initially and within 30% for subsequent analysis (6010C).	• Linear calibration Corr. of 0.998 • Must follow curve processing requirements from SOP QS08	• Re-evaluate curve mix and makeup • Re-run curve • Check instrument for maintenance needs • Re-prep the curve standards Samples cannot be analyzed until there is a passing calibration
ICB	At the beginning of every sequence	Must meet the <±LOD for DOD or < 2xMDL	Re-run
ICV	Alternate source standard to be analyzed after every calibration curve	• Must be in the range 90 to 110% for 6010B&C, or 95 to 115% for 200.7.	• Re-analyze an ICV from a different source • Re-prep and re-analyze the ICV • Re-calibrate and verify standard preps and sources
CCV	• At the beginning of every sequence • For every 10-client samples	• Must be in the range 90 to 110%	• Samples must be reanalyzed if possible, if not samples are flagged with a "Q".
Closing CCV	• At the end of every sequence	• Must be in the range 90 to 110%	• Samples must be reanalyzed if possible, if not samples are flagged with a "Q".
BLK	One per prep batch	• Must be less than ½ ±RL.	• Re-analysis to confirm the positive value • Ascertain if there are any samples within the batch that meet the MB criteria and provide the information for the decision makers • If results are between the LOD or RL/LOQ, then assess the data and notify the PM for further action • Re-prep of samples associated with the MB • NCR will be required for data reported • Final Report data flagging will be required

Table 2 - Method Quality Control Requirements Summary			
QC Check	**Minimum Frequency / Requirements**	**Acceptance Criteria**	**Corrective Action for Failures / Data Useability**
BS	One per prep batch	Must be in the range of 80 to 120% for 6010B, DOD; or 85 to 115% for 200.7.	• Rerun to confirm problem. • All samples associated with the LCS must be re-digested, reanalyzed if possible. • NCR will be required for data reported • If samples cannot be re-digested or re-analyzed Final Report data flagging will be required
MS	One per prep batch	Must be in the range of 80 to 120%	Final Report data flagging will be required
MSD	One per prep batch	Must be in the range of 80 to 120%	Final Report data flagging will be required
Sample Duplicate	One per prep batch	20%	Flag samples
Post Digestion Spike	One per batch	±25% for DOD/6010B, ±20% 6010C	If possible MSA required, Flag samples
DOC Study	• Initially per analyst prior to reporting data • Annually • Follow specific guidelines from section 16 for the preparation and analysis of DOC samples	• Must meet the criteria of the BS for average accuracy	• Re-prep and / or • Re-analysis
MDL Study	Once per year		
LOD Verification	Every quarter		
LOQ Verification	Every quarter		
Linear Dynamic Range Study (LDR)	Every six months		

Table 3, Technical Completeness / Accuracy Checklist

1. Were all the QC check elements analyzed – refer to Table 2 of the SOP
2. Were the QC criteria met
3. In cases of failures, was there an NCR written
4. Were dilution factors applied correctly
5. Was the data uploaded into LIMS via direct upload – if yes, then was a cross check subset of the uploaded values performed
6. Was the red marked data in LIMS checked for accuracy and the corresponding hard copy data documented appropriately
7. Were proper data qualifiers applied to the data in LIMS
8. Was the hard copy package checked for completeness to include all data for the sequence such that the data reviewer could reconstruct sample analyses and validate / approve the data

Table 4, Data Reviewers Checklist (Prior to approving data)

1. Does the hard copy raw data (or electronic raw data) package look complete and include all data points
2. Were QA objectives met and for failures were the appropriate actions taken
3. For direct uploads to LIMS, did a subset cross check match the raw data
4. Did all the manual entries into LIMS match the raw data
5. Were there appropriate signatures and documentation on the raw data
6. Were appropriate LIMS flags used
7. Were manual calculations verified

ANALYST DATA REVIEW CHECKLIST Sample Number(s):
Batch Number(s):
Method: 6010B or 6010C (ICP)

QA/QC Item	Yes	No	NA	Second Level Review
1. Were samples analyzed within USACE holding times?				
2. Was initial calibration curve QC criteria met?				
3. Was all continuing calibration criteria in control?				
4. Did any sample exceed the highest calibration standard? (If yes, were appropriate dilutions made to generate samples concentration within calibration range?)				
5. Did BS or blank spike meet control limits?				
6. Did MS/MSD meet control limits?				
7. Was the preparation (Method) Blank (BLK) below the project required detection limits?				
8. Did you return samples back to cold storage immediately after use?				
9. Was hot plate temperature monitored/documented and did you apply the thermometer correction factor?				
10. Sample preparation information is correct and complete.				
11. Analytical results are correct and complete.				
12. The appropriate SOP's have been used and followed.				
14. "Raw data" including all manual integration's have been correctly interpreted.				
15. "Special" sample preparation and analytical requirements have been met.				
16. Documentation complete (e.g., all anomalies in the analytical sequence have been documented, corrective action forms are complete.				

Comments on any "No" response:

_____

_____

_____

_____

_____

_____

Analyst: _____ Date: _____

EMPIRICAL LABORATORIES, LLC
STANDARD OPERATING PROCEDURE

ORGANICS: SOP 201 REVISION #: 20 EFFECTIVE DATE: 042610

GC/MS SEMIVOLATILES and LOW-CONCENTRATION PAHs BY EPA METHOD 625 AND SW846 METHOD 8270C AND 8270D INCLUDING ADDITIONAL APPENDIX IX COMPOUNDS

APPROVALS:

Lab Director: _____ Date: 4/27/10

Data Quality Manager: _____ Date: 4/27/10

Section Supervisor: _____ Date: 4/27/10

Changes Summary

Revision 20, 4/13/10

- The SOP is an update from Revision 19 dated 4/11/2010
- The SOP is formatted to simplify the text and place all method/program specifications in the SOP tables.

Revision 19, 4/11/10

- The SOP is an update from Revision 18 dated 9/16/08
- The SOP is formatted to include all 22-elements required per the NELAC standards
- The laboratory's revision of all technical SOPs now includes a Table of Contents that provides the map of the technical information contained within the SOP.
- Additional requirements, based upon the DOD QSM 4.1, have been integrated into the routine sample flow; however, if the requirement is different from routine sample flow, then the requirement is outlined and documented as such to be followed only when DOD samples are analyzed.

Table of Contents

1. Identification of the Test Method
2. Applicable Matrix or Matrices
3. Detection Limit
4. Scope of Application, Including components to be Analyzed
5. Summary of the Test Method
6. Definitions
7. Interferences
8. Safety
9. Equipment & Supplies
10. Reagents and Standards
11. Sample Collection, Preservation, Shipment, and Storage
12. Quality Control
13. Calibration and Standardization
14. Procedure
15. Data Analysis and Calculations
16. Method Performance
17. Pollution Prevention
18. Data Assessment and Acceptance Criteria for Quality Control Measures
19. Contingencies for Handling out-of-control or unacceptable data
20. Waste Management
21. References
22. Tables, Diagrams, Flowcharts and Validation Data

1.0 Identification of the Test Method

This SOP is based primarily on SW-846 Methods 8000B/8000C/8270C/8270D. Methods *Federal Register* Method 625 and CLP Method for Semi-volatiles have also been used in the development of this SOP.

2.0 Applicable Matrix or Matrices

This SOP is used for the analysis of semi-volatile organic compounds (including low concentration PAHs) in a variety of matrices (soils, sediments, waters, etc.).

3.0 Detection Limits – Reporting Limits

See Table 1

4.0 Scope of Application, Including Components to Be Analyzed

4.1 Each parameter that is routinely analyzed and reported under the scope of this SOP is listed in the Appendix of this SOP. This table also lists the associated Detection Limit, Limit of Detection and Reporting Limit (also defined as the Limit of Quanititation).

4.2 Extreme care should be taken when working with pure standard and stock standard solutions of these compounds and all handling of standards should be done in a hood. These compounds have been classified as known or suspected human or mammalian carcinogens.

5.0 Summary of the Test Method

5.1 After sample preparation using the appropriate extraction technique, the sample is introduced into the GC/MS using direct injection. The analytes are separated in the gas chromatograph by a combination of the temperature program, the pressure program and the capillary column. The analytes are then detected by the mass spectrometer. Analytes are identified by comparing the mass spectra of known standards with the mass spectra from the sample. Analytes are quantitated relative to known standards using the internal standard method.

6.0 Definitions –

Laboratory Quality System SOP QS08 **"**Technical / Operational Definitions, Minimum Essential Quality Control Elements, and Laboratory Calibration Procedures" provides information on the commonly used definitions.

7.0 Interferences

7.1 All raw data (samples & QC) must be evaluated for interferences. If contamination occurs, determine whether the source of interference is in the preparation or clean-up of the samples and take corrective action to eliminate the problem.

7.2 Contamination by carryover can occur when samples of high-concentration and low-concentration are analyzed sequentially. To reduce carryover, the sample syringe must be rinsed with solvent between injections. If an unusually high sample is detected, a solvent blank should be analyzed for cross contamination or the subsequent sample should be evaluated for cross-contamination.

8.0 Safety

8.1 Laboratory SOP QS13 "Safety Program & Chemical Hygiene Plan" discusses the safety program that is to be followed lab-wide.

8.2 Care should be used in handling all samples. Safety glasses must be worn in the lab at all times. The use of gloves and lab coats is highly recommended.

8.3 Research into expected sample content and concentration should be done in order to be prepared for additional safety considerations. Generally, any samples which need special consideration have applicable notes on the sample logs.

8.4 MSDS sheets are available for all reagents and standards which have been purchased. These are located on the bookshelf outside the office supply storage room.

9.0 Equipment & Supplies

a HP 5890/6890/7890GC complete with electronic pressure control and temperature programmable gas chromatograph suitable for split-less injection.

b Column: RTX-5MS (or equivalent) 30 m x 0.25 mm I.D. x 0.25 µm film thickness fused silica capillary column.

c HP 5971/5973/5975 mass spectrometer capable of scanning from 35 to 500 amu every second or less, using 70 volts electron energy in electron impact ionization mode. The mass spectrometer is capable of producing a mass spectrum for decafluorotriphenylphosphine, DFTPP, which meets all the tuning criteria of the EPA methods.

d HP 7673/7683 autosampler capable of reproducibility from one injection to another proven by meeting QC and calibration criteria.

e HP GC/MS interface that gives acceptable calibration points at 50 ng per injection for each compound of interest and achieves acceptable tuning performance criteria.

f Acquisition Software: HP Chemstation system is interfaced to the GC/MS. The system acquires and stores data throughout the chromatographic programs.

g Data Processing Software: Target DB on Windows NT server data system is interfaced to the HP Chemstation. The system accepts and stores acquired data. It plots by extracted ion current profile (EICP). The system is also capable of integrating the abundances in any EICP between specified times or scan-number limits.

h Micro syringes – gas tight 5uL and larger.

i Liners – 2mm or 4mm single goose-neck.

j Septa 11mm.

k Seals- dual vespel stainless steel or gold plated 0.8mm.

l Vials- 2ml and larger amber.

m Volumetric flasks- 10ml and larger class A with glass stopper.

10.0 Reagents and Standards –

10.1 The laboratory's LIMS system allows for complete documentation and for the traceability of reagents and standards used within the laboratory.

10.2 Reagent grade chemicals shall be used in all tests unless otherwise specified. All reagents shall conform to the specifications of the Committee on Analytical Reagents of the American Chemical Society, where such specifications are available. Other grades may be used, provided it is first ascertained that the reagent is of sufficiently high purity to permit its use without lessening the accuracy of the determination.

10.3 Methylene chloride (Please read SOP-336 before handling this solvent in our laboratory.) – Trace analysis grade.

10.4 Stock standards are purchased in mixtures from reputable vendors. The date they are received is noted on the label and recorded on the certificate of analysis sheet. The date they are opened is noted on the label and recorded in LIMS. Each standards label is completed with the standard number, name, preparation date, expiration date, solvent and analyst initials. All stocks and standards are stored in the freezer at a temperature of -15°C ± 5°C from the date they are received/prepared. Standards are brought to room temperature before being used to make standards. Sonication is used if precipitation is observed after bringing to room temperature. The refrigerator and freezer temperature are monitored daily with an annually calibrated thermometer and recorded with calibration correction in the Extraction temperature/calibration logbook.

10.5 Individual standard makeup is recorded in LIMS with specific details concerning the standard being used, concentration, amount, solvent and expiration date.

11.0 Sample Collection, Preservation, Shipment, and Storage

Section 3.0 and table 3-1 of the Empirical Laboratories' Quality Assurance Manual include details concerning sample preservation, containers and handling of semi-volatile samples and extracts. All water and soil samples are stored in the appropriate walk-in coolers at a temperature of 4°C. All extracts are stored in the Hobart in the Extraction lab at a temperature of 4°C. Water samples have a holding time of 7 days from date of sampling while soil samples have a holding time of 14 days from date of sampling (unless otherwise specified for the project). Extracts have 40 days from date of extraction to be analyzed.

12.0 Quality Control

12.1 Internals - All samples and QC are spiked with internal standards prior to analysis.

12.2 Surrogates - All samples and QC are spiked with surrogates prior to extraction. See **Table 2** for criteria and corrective action.

12.3 LCS Sample - The LCS is extracted 1 per extraction batch of up to 20 samples to provide accuracy results. It is spiked using an alternate source or lot number than the calibration standards. See **Table 2** for criteria and corrective action.

12.4 Method Blanks - The Method Blank is extracted 1 per extraction batch of up to 20 samples. See **Table 2** for criteria and corrective action.

12.5 Matrix Spike/Matrix Spike Duplicate (MS/MSD) Sample - 1 in 20 samples are spiked for a MS/MSD, if sample is available. If no sample is available, an LCSD must be extracted to provide precision results. See **Table 2** for criteria and corrective action. Some factors that may affect MS/MSD results are:

12.5.1 Sample matrix - If the sample is a soil, grab sample or sequentially collected water sample it may affect the %R and RPD of the MS/MSD. Corrective action must be taken in the form of reanalysis if a method problem is indicated.

12.5.2 Original sample concentration - If a spiked compound has a problem and the concentration of that compound in the original sample was four or more times the concentration of the spike, no further corrective action may be necessary other than the generation of a corrective action report to document the problem.

12.5.3 MS vs. MSD - If a spiked compound has a similar problem in both the MS and MSD and is not traced to a method problem, no further action may be necessary other than the generation of a non-conformance report to document the problem.

12.5.4 Non-target Interference - The presence of significant non-target interference should be brought to the immediate attention of your supervisor who should discuss the problem with the client/project manager to determine the action to be taken.

12.6 Demonstration of Capability (DOC) – Each new analyst must complete a demonstration of capability by analyzing four LCSs with acceptable precision and accuracy. This also must be done when a new instrument is installed or a significant change to the method has been made.

13.0 Calibration and Standardization

13.1 Quality Systems **SOP QS08** "Technical / Operational Definitions, Minimum Essential Quality Control Elements, and Laboratory Calibration Procedures" related to Calibration Procedures provides laboratory wide protocols for calibration and standardization.

13.2 Initial Calibration - An initial multi-point calibration curve must be analyzed and shown to meet the initial calibration criteria before any sample analyses may be performed. See **Table 2** for criteria and corrective action. The lowest standard must be less than or equal to the reported quantitation limit and the highest standard must not exceed the linear range of the detector. Generally, levels for the curve range from 1.0ug/mL to 100ug/mL for regular SVOCs and 0.1µg/mL to 50µg/mL for low-concentration PAHs.. Any manual integrations are documented by inclusion of the integrated signals (**before and after manual integration**) initialed, reason indicated and dated with the quantitation report and chromatogram. All integrations are second-checked for acceptability by a senior analyst. Refer to SOP-QS07 for guidance.

13.3 Initial Calibration Verification (ICV) - A second source standard at the continuing calibration verification (CCV) level must be analyzed and calculated against the initial calibration curve, then shown to meet the ICV criteria before any sample analyses may be performed. See **Table 2** for criteria and corrective action. For ICV standard preparation, refer to LIMS. Any manual integrations are documented by inclusion of the integrated signals (**before and after manual integration**) initialed, reason indicated and dated with the quantitation report and chromatogram. All integrations are second-checked for acceptability by a senior analyst. Refer to SOP-QS07 for guidance.

13.4 Continuing Calibration Verification (CCV) - Every 12 hours, a CCV must be analyzed and calculated against the initial calibration curve, then shown to meet the calibration check criteria before any sample analyses may be performed. See **Table 2** for criteria and corrective action. For ICV standard preparation, refer to LIMS. Any manual integrations are documented by inclusion of the integrated signals (**before and after manual integration**) initialed, reason indicated and dated with the quantitation report and chromatogram. All integrations are second-checked for acceptability by a senior analyst. Refer to SOP-QS07 for guidance.

14.0 Procedure

Prior to analysis the samples are prepared for chromatography using the appropriate sample preparation and clean up methods (generally SW-846 methods 3510, 3520, 3541, 3546 3550, 3580, EPA method 625 or CLP).

14.1 Chromatographic conditions: Refer to corresponding instrument maintenance log for current gas chromatograph and mass spectrometer conditions.

14.2 Tuning - Prior to any calibration or analysis, DFTPP tuning criteria must be met for a 50 ng injection of the tuning standard. The injection port performance compounds (pentachlorophenol, benzidine and 4,4'-DDT) are also injected to verify the performance of the injection port . See **Table 2** for criteria and corrective action.

14.3 Extracts - Prior to analysis, 1.0 mL extracts are prepared by verifying volume and spiking with 20uL of the internal standard solution.

14.5 Instrument sequence-The instrument sequence log is filled out prior to sample analyses. An example of a typical instrument sequence log follows:

1-SEQ-TUN1 (12:00 am)
2-SEQ-CCV1
3-SEQ-BS1
4-SEQ-BLK1
5-Sample
6-Sample
7-Sample
8-Sample
9-Sample
10-Sample
11-Sample
12-Sample
13-Sample
14-SEQ-MS1
15-SEQ-MSD1
16-SEQ-TUN2 (12:00pm - 12 hours since last DFTPP/CCV)
17-SEQ-CCV2
18-Sample
19-Sample
20-Sample

14.6 Data Reduction/Evaluation - Each sample analysis sequence is documented using the computer run log generated on the Chemstation. This run log is signed, dated and paginated then placed in a 3 ring binder for that instrument. After the sample has been analyzed, the data is processed through Target DB on the Windows NT data system. The following must be checked to determine if the sample will need reanalysis or dilution. Criteria and corrective action are found in Table 2. Formal data evaluation is detailed in SOP QS05 and documented using the Analyst Data Review Checklist (see Appendix). Manual integration guidance is found in SOP QS07.

14.6.1 Internal Standard Area Counts and Retention Times

14.6.2 Surrogate Recoveries and Retention Times

14.6.3 Analyte concentration.
14.6.4 Analyte identification based on spectrum and retention time.
14.6.5 Analyte quantitation verification.

15.0 Data Analysis and Calculations

15.1 Quality Systems SOP QS09 "General and Commonly used Laboratory Calculations" provides details on general calculations used throughout the laboratory.

15.2 The RF is calculated as follows:

$$RF = \frac{A_s \times C_{is}}{A_{is} \times C_s}$$

where:
A_s = Peak area (or height) of the analyte or surrogate.
A_{is} = Peak area (or height) of the internal standard.
C_s = Concentration of the analyte or surrogate.
C_{is} = Concentration of the internal standard.

15.2 Calibration verification involves the calculation of the percent drift (linear or quadratic) or the percent difference (average) of the instrument response between the initial calibration and each subsequent analysis of the verification standard. Use the equations below to calculate % Drift or % Difference, depending on the calibration procedure used.

$$\% \text{ Drift} = \frac{(\text{Calculated concentration} - \text{Theoretical concentration}) * 100}{\text{Theoretical Concentration}}$$

where:
Calculated concentration is determined from the initial calibration.
Theoretical concentration is the concentration at which the standard was prepared.

$$\% \text{ Difference} = \frac{(\text{CCV RF} - \text{Average RF}) * 100}{\text{Average RF}}$$

where:
CCV RF is the response factor from the analysis of the verification standard
Average RF is the average of the response factors from the initial calibration.

15.3 Concentration in water samples is calculated as follows: [Note: Using the units specified here for these terms will result in a concentration in units of ng/mL, which is equivalent to µg/L.]

$$\text{Concentration } (\mu g/L) = \frac{(A_s)(C_{is})(D)(V_i)}{(A_{is})(\overline{RF})(V_s)(1000)}$$

where:
A_s = Area (or height) of the peak for the analyte in the sample.
A_{is} = Area (or height) of the peak for the internal standard.
C_{is} = Concentration of the internal standard in the volume extracted in ug/L.
D = Dilution factor, if the sample was diluted prior to analysis. If no dilution was made, D = 1. The dilution factor is always dimensionless.
V_i = Volume of the extract injected (µL). The nominal injection volume for samples and calibration standards must be the same.

$\overline{RF}$ = Mean response factor from the initial calibration.

V_s = Volume of the aqueous sample extracted (mL). If units of liters are used for this term, multiply the results by 1000.

The 1000 in the denominator represents the number of µL in 1 mL. If the injection (V_i) is expressed in mL, then the 1000 may be omitted.

15.4 Concentration in non-aqueous samples is calculated as follows: [Note: Using the units specified here for these terms will result in a concentration in units of ng/g, which is equivalent to µg/kg.]

$$\text{Concentration } (\mu\text{g/kg}) = \frac{(A_s)(C_{is})(D)(V_i)}{(A_{is})(\overline{RF})(W_s)(1000)}$$

where: A_s,

A_{is}, C_{is}, D, and $\overline{RF}$ are the same as for aqueous samples, and

W_s = Weight of sample extracted (g). Either a dry weight or wet weight may be used, depending upon the specific application of the data. If units of kilograms are used for this term, multiply the results by 1000.

The 1000 in the denominator represents the number of µL in 1 mL. If the injection (V_i) is expressed in mL, then the 1000 may be omitted.

15.3 Any questions left unanswered by this SOP should be clarified by reading the referenced method. If questions still remain unanswered, check with the Section Manager, Technical Director and/or Data Quality Manager.

16.0 Method Performance

See SOP QS08 and Table 2 for criteria and corrective actions associated to the following method performance items:

16.1 Method Detection Limit Study or Detection Limit Determination
16.2 Limit of Detection Verification
16.3 Limit of Quantitation or Reporting Limit Verification
16.4 Demonstration of Capability (DOC)
16.5 PT Studies

17.0 Pollution Prevention

Quantity of chemicals purchased should be based on expected usage during its shelf-life and the disposal cost of unused material. Actual reagent preparation volumes should reflect anticipated usage and reagent stability.

18.0 Data Assessment and Acceptance Criteria for Quality Control Measures

Quality Control SOP QS05, "Data Deviations / Interpretations / Exceptions: Laboratory Non-Conformance / Corrective Action Procedures, Decision Making Guidelines for Evaluating Laboratory Analytical Sample and Quality Control Results", provides details on data assessment and acceptance criteria for Quality Control Measures. **Table 2** of this SOP provides information on QC samples, frequency, and the associated criteria specific to the performance of this method.

19.0 Contingencies for Handling out-of-control or unacceptable data

Quality Control SOP QS05, "Data Deviations / Interpretations / Exceptions: Laboratory Non-Conformance / Corrective Action Procedures, Decision Making Guidelines for Evaluating Laboratory Analytical Sample and Quality Control Results", provides details on handling out of control data. **Table 2** within this SOP also lists corrective actions associated with the failure of the various QC samples employed for the performance of this method.

20.0 Waste Management

Laboratory SOP QS14 on Waste Handling discusses general guidelines for the appropriate handling of wastes and the laboratory program on waste management.

21.0 References

40 CFR, Part 136; Appendix A
Test Methods for Evaluating Solid Waste, SW-846
National Environmental Laboratory Accreditation Conference; CH. 5, 2003
USACE, EM 200-1-3; Appendix 1; Shell, 2/2001
DOD Quality Systems Manual for Environmental Laboratories,

22.0 Tables, Diagrams, Flowcharts and Validation Data

22.1 Table 1, all applicable parameters with the applicable DL(MDL)/LOD/LOQ(MRL).
22.2 Table 2, QA/QC summary table
22.3 Table 3, Technical Completeness / Accuracy Checklist
22.4 Table 4, Data Reviewers Checklist(s)
22.5 Table 5, 625 QC Limits
22.6 Table 6, Standards Used
22.7 Table 7, INTERNAL STANDARD ASSOCIATION / QUANT MASS – Standard SVOC analysis
22.8 Table 8, LOW CONCENTRATION PAH INTERNAL STANDARD/SURROGATE SPECIFICATIONS
22.9 Figure 1, Tailing Factor Calculation
22.10 Table 9, DFTPP Tuning Criteria

TABLE 1

Analyte (Water)	DL	LOD	MRL/LOQ	Units
1,1'-Biphenyl	1.25	2.50	5.00	ug/L
1,2,4,5-Tetrachlorobenzene	1.25	2.50	5.00	ug/L
1,2,4-Trichlorobenzene	1.25	2.50	5.00	ug/L
1,2-Dichlorobenzene	1.25	2.50	5.00	ug/L
1,3-Dichlorobenzene	1.25	2.50	5.00	ug/L
1,4-Dichlorobenzene	1.25	2.50	5.00	ug/L
2,3,4,6-Tetrachlorophenol	1.25	2.50	5.00	ug/L
2,4,5-Trichlorophenol	1.25	2.50	5.00	ug/L
2,4,6-Trichlorophenol	1.25	2.50	5.00	ug/L
2,4-Dichlorophenol	1.25	2.50	5.00	ug/L
2,4-Dimethylphenol	5.00	10.0	20.0	ug/L
2,4-Dinitrophenol	12.5	25.0	50.0	ug/L
2,4-Dinitrotoluene	1.25	2.50	5.00	ug/L
2,6-Dinitrotoluene	1.25	2.50	5.00	ug/L
2-Chloronaphthalene	1.25	2.50	5.00	ug/L
2-Chlorophenol	1.25	2.50	5.00	ug/L
2-Methylnaphthalene	1.25	2.50	5.00	ug/L
2-Methylphenol	1.25	2.50	5.00	ug/L
2-Nitroaniline	5.00	10.0	20.0	ug/L
2-Nitrophenol	1.25	2.50	5.00	ug/L
3,3´-Dichlorobenzidine	1.25	2.50	5.00	ug/L
3-Nitroaniline	5.00	10.0	20.0	ug/L
4,6-Dinitro-2-methylphenol	5.00	10.0	20.0	ug/L
4-Bromophenyl phenyl ether	1.25	2.50	5.00	ug/L
4-Chloro-3-methylphenol	1.25	2.50	5.00	ug/L
4-Chloroaniline	1.25	2.50	5.00	ug/L
4-Chlorophenyl phenyl ether	1.25	2.50	5.00	ug/L
4-Methylphenol	1.25	2.50	5.00	ug/L
4-Nitroaniline	5.00	10.0	20.0	ug/L
4-Nitrophenol	5.00	10.0	20.0	ug/L
Acenaphthene	1.25	2.50	5.00	ug/L
Acenaphthylene	1.25	2.50	5.00	ug/L
Acetophenone	1.25	2.50	5.00	ug/L
Anthracene	1.25	2.50	5.00	ug/L
Atrazine	1.25	2.50	5.00	ug/L
Benzaldehyde	1.25	2.50	5.00	ug/L
Benzo (a) anthracene	1.25	2.50	5.00	ug/L
Benzo (a) pyrene	1.25	2.50	5.00	ug/L
Benzo (b) fluoranthene	1.25	2.50	5.00	ug/L
Benzo (g,h,i) perylene	1.25	2.50	5.00	ug/L
Benzo (k) fluoranthene	1.25	2.50	5.00	ug/L
Bis(2-chloroethoxy)methane	1.25	2.50	5.00	ug/L
Bis(2-chloroethyl)ether	1.25	2.50	5.00	ug/L
Bis(2-chloroisopropyl)ether	1.25	2.50	5.00	ug/L
Bis(2-ethylhexyl)phthalate	1.25	2.50	5.00	ug/L
Butyl benzyl phthalate	1.25	2.50	5.00	ug/L
Caprolactam	1.25	2.50	5.00	ug/L
Carbazole	1.25	2.50	5.00	ug/L
Chrysene	1.25	2.50	5.00	ug/L
Dibenz (a,h) anthracene	1.25	2.50	5.00	ug/L
Dibenzofuran	1.25	2.50	5.00	ug/L
Diethyl phthalate	1.25	2.50	5.00	ug/L
Dimethylphthalate	1.25	2.50	5.00	ug/L
Di-n-butyl phthalate	1.25	2.50	5.00	ug/L

Table 1 (Continued)

Analyte (Water)	DL	LOD	MRL/LOQ	Units
Di-n-octyl phthalate	1.25	2.50	5.00	ug/L
Fluoranthene	1.25	2.50	5.00	ug/L
Fluorene	1.25	2.50	5.00	ug/L
Hexachlorobenzene	1.25	2.50	5.00	ug/L
Hexachlorobutadiene	1.25	2.50	5.00	ug/L
Hexachlorocyclopentadiene	1.25	2.50	5.00	ug/L
Hexachloroethane	1.25	2.50	5.00	ug/L
Indeno (1,2,3-cd) pyrene	1.25	2.50	5.00	ug/L
Isophorone	1.25	2.50	5.00	ug/L
Naphthalene	1.25	2.50	5.00	ug/L
Nitrobenzene	1.25	2.50	5.00	ug/L
N-Nitrosodi-n-propylamine	1.25	2.50	5.00	ug/L
N-Nitrosodiphenylamine	1.25	2.50	5.00	ug/L
Pentachlorophenol	5.00	10.0	20.0	ug/L
Phenanthrene	1.25	2.50	5.00	ug/L
Phenol	1.25	2.50	5.00	ug/L
Pyrene	1.25	2.50	5.00	ug/L
Analyte (Soil)	**DL**	**LOD**	**MRL/LOQ**	**Units**
1,1'-Biphenyl	83.3	167	333	ug/Kg
1,2,4,5-Tetrachlorobenzene	83.3	167	333	ug/Kg
1,2,4-Trichlorobenzene	83.3	167	333	ug/Kg
1,2-Dichlorobenzene	83.3	167	333	ug/Kg
1,3-Dichlorobenzene	83.3	167	333	ug/Kg
1,4-Dichlorobenzene	83.3	167	333	ug/Kg
2,3,4,6-Tetrachlorophenol	83.3	167	333	ug/Kg
2,4,5-Trichlorophenol	83.3	167	333	ug/Kg
2,4,6-Trichlorophenol	83.3	167	333	ug/Kg
2,4-Dichlorophenol	83.3	167	333	ug/Kg
2,4-Dimethylphenol	333	667	1330	ug/Kg
2,4-Dinitrophenol	833	1670	3330	ug/Kg
2,4-Dinitrotoluene	83.3	167	333	ug/Kg
2,6-Dinitrotoluene	83.3	167	333	ug/Kg
2-Chloronaphthalene	83.3	167	333	ug/Kg
2-Chlorophenol	83.3	167	333	ug/Kg
2-Methylnaphthalene	83.3	167	333	ug/Kg
2-Methylphenol	83.3	167	333	ug/Kg
2-Nitroaniline	333	667	1330	ug/Kg
2-Nitrophenol	83.3	167	333	ug/Kg
3,3´-Dichlorobenzidine	83.3	167	333	ug/Kg
3-Nitroaniline	333	667	1330	ug/Kg
4,6-Dinitro-2-methylphenol	833	1670	3330	ug/Kg
4-Bromophenyl phenyl ether	83.3	167	333	ug/Kg
4-Chloro-3-methylphenol	83.3	167	333	ug/Kg
4-Chloroaniline	83.3	167	333	ug/Kg
4-Chlorophenyl phenyl ether	83.3	167	333	ug/Kg
4-Methylphenol	83.3	167	333	ug/Kg
4-Nitroaniline	333	667	1330	ug/Kg
4-Nitrophenol	333	667	1330	ug/Kg
Acenaphthene	83.3	167	333	ug/Kg
Acenaphthylene	83.3	167	333	ug/Kg
Acetophenone	83.3	167	333	ug/Kg
Anthracene	83.3	167	333	ug/Kg
Atrazine	83.3	167	333	ug/Kg
Benzaldehyde	83.3	167	333	ug/Kg
Benzo (a) anthracene	83.3	167	333	ug/Kg

Table 1 (Continued)

Analyte (Soil)	DL	LOD	MRL/LOQ	Units
Benzo (a) pyrene	83.3	167	333	ug/Kg
Benzo (b) fluoranthene	83.3	167	333	ug/Kg
Benzo (g,h,i) perylene	83.3	167	333	ug/Kg
Benzo (k) fluoranthene	83.3	167	333	ug/Kg
Bis(2-chloroethoxy)methane	83.3	167	333	ug/Kg
Bis(2-chloroethyl)ether	83.3	167	333	ug/Kg
Bis(2-chloroisopropyl)ether	83.3	167	333	ug/Kg
Bis(2-ethylhexyl)phthalate	83.3	167	333	ug/Kg
Butyl benzyl phthalate	83.3	167	333	ug/Kg
Caprolactam	83.3	167	333	ug/Kg
Carbazole	83.3	167	333	ug/Kg
Chrysene	83.3	167	333	ug/Kg
Dibenz (a,h) anthracene	83.3	167	333	ug/Kg
Dibenzofuran	83.3	167	333	ug/Kg
Diethyl phthalate	83.3	167	333	ug/Kg
Dimethylphthalate	83.3	167	333	ug/Kg
Di-n-butyl phthalate	83.3	167	333	ug/Kg
Di-n-octyl phthalate	83.3	167	333	ug/Kg
Fluoranthene	83.3	167	333	ug/Kg
Fluorene	83.3	167	333	ug/Kg
Hexachlorobenzene	83.3	167	333	ug/Kg
Hexachlorobutadiene	83.3	167	333	ug/Kg
Hexachlorocyclopentadiene	83.3	167	333	ug/Kg
Hexachloroethane	83.3	167	333	ug/Kg
Indeno (1,2,3-cd) pyrene	83.3	167	333	ug/Kg
Isophorone	83.3	167	333	ug/Kg
Naphthalene	83.3	167	333	ug/Kg
Nitrobenzene	83.3	167	333	ug/Kg
N-Nitrosodi-n-propylamine	83.3	167	333	ug/Kg
N-Nitrosodiphenylamine	83.3	167	333	ug/Kg
Pentachlorophenol	333	667	1330	ug/Kg
Phenanthrene	83.3	167	333	ug/Kg
Phenol	83.3	167	333	ug/Kg
Pyrene	83.3	167	333	ug/Kg
Analyte Low PAH (Water)	**DL**	**LOD**	**MRL/LOQ**	**Units**
1-Methylnaphthalene	0.0500	0.100	0.200	ug/L
2-Methylnaphthalene	0.0500	0.100	0.200	ug/L
Acenaphthene	0.0500	0.100	0.200	ug/L
Acenaphthylene	0.0500	0.100	0.200	ug/L
Anthracene	0.0500	0.100	0.200	ug/L
Benzo (a) anthracene	0.0500	0.100	0.200	ug/L
Benzo (a) pyrene	0.0500	0.100	0.200	ug/L
Benzo (b) fluoranthene	0.0500	0.100	0.200	ug/L
Benzo (g,h,i) perylene	0.0500	0.100	0.200	ug/L
Benzo (k) fluoranthene	0.0500	0.100	0.200	ug/L
Chrysene	0.0500	0.100	0.200	ug/L
Dibenz (a,h) anthracene	0.0500	0.100	0.200	ug/L
Fluoranthene	0.0500	0.100	0.200	ug/L
Fluorene	0.0500	0.100	0.200	ug/L
Indeno (1,2,3-cd) pyrene	0.0500	0.100	0.200	ug/L
Naphthalene	0.0500	0.100	0.200	ug/L
Phenanthrene	0.0500	0.100	0.200	ug/L
Pyrene	0.0500	0.100	0.200	ug/L
Analyte Low PAH (Soil)	**DL**	**LOD**	**MRL/LOQ**	**Units**
1-Methylnaphthalene	1.67	3.33	6.67	ug/Kg

Table 1 (Continued)

Analyte Low PAH (Soil)	DL	LOD	MRL/LOQ	Units
2-Methylnaphthalene	1.67	3.33	6.67	ug/Kg
Acenaphthene	1.67	3.33	6.67	ug/Kg
Acenaphthylene	1.67	3.33	6.67	ug/Kg
Anthracene	1.67	3.33	6.67	ug/Kg
Benzo (a) anthracene	1.67	3.33	6.67	ug/Kg
Benzo (a) pyrene	1.67	3.33	6.67	ug/Kg
Benzo (b) fluoranthene	1.67	3.33	6.67	ug/Kg
Benzo (g,h,i) perylene	1.67	3.33	6.67	ug/Kg
Benzo (k) fluoranthene	1.67	3.33	6.67	ug/Kg
Chrysene	1.67	3.33	6.67	ug/Kg
Dibenz (a,h) anthracene	1.67	3.33	6.67	ug/Kg
Fluoranthene	1.67	3.33	6.67	ug/Kg
Fluorene	1.67	3.33	6.67	ug/Kg
Indeno (1,2,3-cd) pyrene	1.67	3.33	6.67	ug/Kg
Naphthalene	1.67	3.33	6.67	ug/Kg
Phenanthrene	1.67	3.33	6.67	ug/Kg
Pyrene	1.67	3.33	6.67	ug/Kg
Analyte (TCLP)	**DL**	**LOD**	**MRL/LOQ**	**Units**
1,4-Dichlorobenzene	0.00125	0.00250	0.00500	mg/L
2,4,5-Trichlorophenol	0.00125	0.00250	0.00500	mg/L
2,4,6-Trichlorophenol	0.00125	0.00250	0.00500	mg/L
2,4-Dinitrotoluene	0.00125	0.00250	0.00500	mg/L
2-Methylphenol	0.00125	0.00250	0.00500	mg/L
3-Methylphenol	0.00125	0.00250	0.00500	mg/L
4-Methylphenol	0.00125	0.00250	0.00500	mg/L
Hexachlorobenzene	0.00125	0.00250	0.00500	mg/L
Hexachlorobutadiene	0.00125	0.00250	0.00500	mg/L
Hexachloroethane	0.00125	0.00250	0.00500	mg/L
Nitrobenzene	0.00125	0.00250	0.00500	mg/L
Pentachlorophenol	0.0050	0.0100	0.0200	mg/L
Pyridine	0.00125	0.00250	0.00500	mg/L

Table 2. Organic Analysis by Gas Chromatography/Mass Spectrometry (Methods 625/8270)					
QC Check	Minimum Frequency	Acceptance Criteria	Corrective Action	Flagging Criteria	Comments
Demonstrate acceptable analytical capability	Prior to using any test method and at any time there is a significant change in instrument type, personnel, test method, or sample matrix.	QC acceptance criteria published by DoD, if available; otherwise, method-specific criteria.	Recalculate results; locate and fix problem, then rerun demonstration for those analytes that did not meet criteria (see Section C.1.f of DoD QSM 4.1).	NA.	This is a demonstration of analytical ability to generate acceptable precision and bias per the procedure in Appendix C of DoD QSM 4.1. No analysis shall be allowed by analyst until successful demonstration of capability is complete.
MDL determination	Initial method demonstration required for some states – not required for DoD	Refer to SOP QS09.			
LOD determination and verification	Prior to initial analysis then quarterly verification.	See Box D-13 of DoD QSM 4.1			
LOQ establishment and verification	Prior to initial analysis then quarterly verification.	See Box D-14 of DoD QSM 4.1			
Tuning	Prior to ICAL and at the beginning of each 12-hour period.	Refer to table 8 of this SOP.	Retune instrument and verify. Rerun affected samples.	Flagging criteria are not appropriate.	Problem must be corrected. No samples may be accepted without a valid tune.
Breakdown check (DDT Method 8270 only)	At the beginning of each 12-hour period, prior to analysis of samples.	Degradation ≤ 20% for DDT. Benzidine and pentachlorophenol should be present at their normal responses, and should not exceed a tailing factor of 2. [Method 625 – benzidine and pentachlorophenol tailing limits are 3 and 5, respectively, when benzidine or acids are target analytes. Benzidine tailing is specific to benzidine analysis and pentachlorophenol tailing is specific to acid analyte analyses according to 625.]	Correct problem then repeat breakdown checks.	Flagging criteria are not appropriate.	No samples shall be run until degradation ≤ 20%. **Not applied when low concentration PAHs are the only target analytes.**

Table 2. Organic Analysis by Gas Chromatography/Mass Spectrometry (Methods 625/8270) (continued)					
QC Check	Minimum Frequency	Acceptance Criteria	Corrective Action	Flagging Criteria	Comments
Minimum five-point initial calibration (ICAL) for all analytes	ICAL prior to sample analysis.	**1.** Average response factor (RF) for SPCCs: SVOCs ≥ 0.050 [2,4-dinitrophenol, hexachlorocyclopentadiene, N-Nitrosodi-n-propylamine, 4-nitrophenol] Note 1: See table 4 of 8270D SPCC analytes and limits. Note 2: ≥ 0.050 for all low-level PAHs **2.** RSD for RFs for CCCs: SVOCs ≤ 30% and one option below: **Option 1:** RSD for each analyte ≤ 15%; [≤ 20% for non-DoD 8270D; or, ≤35% for non-DoD 625] **Option 2:** linear least squares regression r ≥ 0.995 or $r^2 \geq 0.990$; [r ≥ 0.990 for non-DoD analyses] **Option 3:** non-linear regression–coefficient of determination (COD) $r^2 \geq 0.990$ (6 points shall be used for second order, 7 points shall be used for third order).	Correct problem then repeat ICAL.	Flagging criteria are not appropriate.	Problem must be corrected. No samples may be run until ICAL has passed. Calibration may not be forced through the origin for DoD projects.
Second source calibration verification (ICV)	Once after each ICAL.	All project analytes within ± 20% of true value [± 25% for non-DoD 8270C; or, ± 30% for non-DoD 8270D]	Correct problem and verify second source standard. Rerun second source verification. If that fails, correct problem and repeat ICAL.	Flagging criteria are not appropriate.	Problem must be corrected. No samples should be run until calibration has been verified.
Retention time window position establishment for each analyte and surrogate	Once per ICAL.	Position shall be set using the midpoint standard of the ICAL curve when ICAL is performed. On days when ICAL is not performed, the sequence CCV is used.	NA.	NA.	

Table 2. Organic Analysis by Gas Chromatography/Mass Spectrometry (Methods 625/8270) (continued)					
QC Check	Minimum Frequency	Acceptance Criteria	Corrective Action	Flagging Criteria	Comments
Evaluation of relative retention times (RRT)	With each sample.	RRT of each target analyte within ± 0.06 RRT units. Note - retention times may be updated based on the CCV to account for minor performance fluctuations or after routine system maintenance (such as column clipping).	Correct problem, then rerun ICAL.	Flagging criteria are not appropriate.	With each sample, the RRT shall be compared with the most recently updated RRT. If the RRT has changed by more than ±0.06 RRT units since the last update, this indicates a significant change in system performance and the laboratory must take appropriate corrective actions as required by the method and rerun the ICAL to reestablish the retention times.
Continuing calibration verification (CCV)	Daily before sample analysis and every 12 hours of analysis time.	**1.** Average RF for SPCCs: SVOCs ≥ 0.050 [2,4-dinitrophenol, hexachlorocyclopentadiene, N-Nitrosodi-n-propylamine, 4-nitrophenol] Note 1: See table 4 of 8270D SPCC analytes and limits. Note 2: ≥ 0.050 for all low-level PAHs **2.** %Difference/Drift for all target compounds and surrogates: SVOCs ≤ 20%D (Note: D = difference when using RFs or drift when using least squares regression or non-linear calibration). [± 20% for CCCs only non-DoD 8270C]	DoD project level approval must be obtained for each of the failed analytes or corrective action must be taken. Correct problem, then rerun calibration verification. If that fails, then repeat ICAL. Reanalyze all samples since last acceptable CCV.	If reanalysis cannot be performed, data should be qualified and explained in the case narrative. Apply qualifier to all results for the specific analyte(s) in all samples since last acceptable CCV. [For non-DoD 8270C, if CCCs exceed, evaluate all analytes for 20%D and qualify as above]	Problem should be corrected. Results should not be reported without a valid CCV. Flagging is only appropriate in cases where the samples cannot be reanalyzed, holding time has been exceeded or client has approved reporting.
Internal standards verification	Every field sample, standard, and QC sample.	Retention time ± 30 seconds from retention time of the midpoint standard in the ICAL or daily CCV; EICP area within -50% to +100% of ICAL midpoint standard or daily CCV.	Inspect mass spectrometer and GC for malfunctions. Reanalysis of samples analyzed while system was malfunctioning is mandatory.	If corrective action fails in field samples, apply qualifier to analytes associated with the non-compliant IS. Flagging criteria are not appropriate for failed standards.	Sample results are not acceptable without a valid IS verification.

Table 2. Organic Analysis by Gas Chromatography/Mass Spectrometry (Methods 625/8270) (continued)					
QC Check	Minimum Frequency	Acceptance Criteria	Corrective Action	Flagging Criteria	Comments
Method blank	One per preparatory batch.	No analytes detected > ½ RL/LOQ or > 1/10 the amount measured in any sample or 1/10 the regulatory limit (whichever is greater). Blank result must not otherwise affect sample results. For common laboratory contaminants, no analytes detected > RL/LOQ.	Correct problem. If required, reprep and reanalyze method blank and all samples processed with the contaminated blank.	If reanalysis cannot be performed, data must be qualified and explained in the case narrative. Apply B-flag to all results for the specific analyte(s) in all samples in the associated preparatory batch.	Problem must be corrected. Results may not be reported without a valid method blank. Flagging is only appropriate in cases where the samples cannot be reanalyzed.
LCS containing all analytes to be reported, including surrogates	One per preparatory batch.	QC acceptance criteria specified by client or DoD (appendix G), if available. AFCEE 4.0.02 limits are applied for low concentration PAHs as they are not addressed by DoD. Otherwise, use in-house control limits. In-house control limits may not be greater than ± 3 times the standard deviation of the mean LCS recovery. Low concentration PAH limits	Correct problem, then reprep and reanalyze the LCS and all samples in the associated preparatory batch for failed analytes, if sufficient sample material is available.	If reanalysis cannot be performed, data must be qualified and explained in the case narrative. Apply Q-flag to specific analyte(s) in all samples in the associated preparatory batch.	Problem must be corrected. Results may not be reported without a valid LCS. Flagging is only appropriate in cases where the samples cannot be reanalyzed.
Matrix Spike (MS)	One per preparatory batch per matrix	Use LCS criteria, above.	Examine the project-specific DQOs. Contact the client as to additional measures to be taken.	For the specific analyte(s) in the parent sample, apply qualifier if acceptance criteria are not met.	For matrix evaluation only. If MS results are outside the LCS limits, the data shall be evaluated to determine the source of difference and to determine if there is a matrix effect or analytical error.
Matrix spike duplicate (MSD) or sample duplicate	One per preparatory batch per matrix	MSD: For matrix evaluation, use LCS acceptance criteria above. MSD or sample duplicate: RPD ≤ 30% or client specified limit (between MS and MSD or sample and sample duplicate).	Examine the project-specific DQOs. Contact the client as to additional measures to be taken.	For the specific analyte(s) in the parent sample, apply qualifier if acceptance criteria are not met.	The data shall be evaluated to determine the source of difference.

Table 2. Organic Analysis by Gas Chromatography/Mass Spectrometry (Methods 625/8270) (continued)

QC Check	Minimum Frequency	Acceptance Criteria	Corrective Action	Flagging Criteria	Comments
Surrogate spike	All field and QC samples.	**Surrogate** / **Water** / **Solid** Nitrobenzene-d5: 40-110 / 35-100 2-Fluorobiphenyl: 50-110 / 45-105 Terphenyl-d14: 50-135 / 30-125 Phenol-d6: 10-115 / 40-100 2-Fluorophenol: 20-110 / 35-105 2,4,6-Tribromophenol: 40-125 / 35-125 QC acceptance criteria specified by DoD (above) or Client. Low PAH surrogate limits are 14%-129% soil and 34%-167% water. Otherwise, in-house control limits may be used. No limits specified for Method 625.	For QC and field samples, correct problem then reprep and reanalyze all failed samples for failed surrogates in the associated preparatory batch, if sufficient sample material is available. If obvious chromatographic interference with surrogate is present, reanalysis may not be necessary.	Apply qualifier to all associated analytes if acceptance criteria are not met. For acid surrogate, qualify acid analytes, for base/neutral surrogates, qualify base/neutral analytes.	
Results reported between DL and LOQ	NA.	NA.	NA.	Apply J-flag to all results between DL and LOQ.	

Table 3, Technical Completeness / Accuracy Checklist

1. Were all the QC check elements analyzed – refer to Table 2 of the SOP
2. Were the QC criteria met
3. In cases of failures, was there an NCR written
4. Were all manual integrations signed
5. Were dilution factors applied correctly
6. Was there supervisory or senior-scientist approval for manual integrations on standards and batch QC samples
7. Was the data uploaded into LIMS via direct upload (i.e. datatool) – if yes, then was a cross check subset of the uploaded values performed
8. If the data was entered into LIMS manually, was a check of all entered values performed
9. Was the red marked data in LIMS checked for accuracy and the corresponding hard copy data documented appropriately
10. Were proper data qualifiers applied to the data in LIMS
11. Was the hard copy package checked for completeness to include all data for the sequence such that the data reviewer could reconstruct sample analyses and validate / approve the data

Table 4, Data Reviewers Checklist (Prior to approving data)

1. Does the hard copy raw data (or electronic raw data) package look complete and include all data points
2. Were QA objectives met and for failures were the appropriate actions taken
3. For direct uploads to LIMS, did a subset cross check match the raw data
4. Did all the manual entries into LIMS match the raw data
5. Were there appropriate signatures and documentation on the raw data
6. Were appropriate LIMS flags used
7. Were manual integrations signed
8. Were manual integrations for calibration and QC samples approved by supervisor
9. Were manual calculations verified

ANALYST DATA REVIEW CHECKLIST

Sample Number(s):
Batch Number(s):
Method: 8260B/624/8270C/8270D/625 (Circle One)

QA/QC Item	Yes	No	NA	Second Level Review
1. Is the BFB/DFTPP tune performed every 12 hours and is the tuning criteria met?				
Are the RRFs and % RSDs within QC limits for appropriate analytes for the initial calibration? Check the retention times for compounds with the same spectra. Check compounds with different conc.(e.g. m/p-xylene, ketones, etc.).				
3. Was the initial calibration curve verified by a second source calibration standard (ICV) and have criteria been met?				
4. Does the Continuing Calibration Standard (CCV) meet the criteria for the CCCs, SPCCs and/or 20%D for all analytes.				
5. Is the Method Blank run at the desired frequency and is its concentration for target analytes less than the MDLs?				
6. Are the LCS, MS, MSD within control limits and run at the desired frequency?				
7. Are all sample holding times met, analytes within calibration range, IS areas and surrogate recoveries within QC limits?				
8. Were the Method Blank, LCS, MS, MSD and samples uploaded to the LIMS and verified (at least one calculation per batch uploaded)?				

Comments on any "No" response:

_____

_____

_____

_____

Primary-Level Review: _____ Date: _____

Second-Level Review: _____ Date: _____

Table 5 - 625 QC limits

COMPOUND	SPIKE ADDED (ug/L)	SAMPLE CONCENTRATION (ug/L)	LCS CONCENTRATION (ug/L)	LCS % REC #	QC. LIMITS REC.
Acenaphthene	100.00	0.0000	100.00	100	47-145
Acenaphthylene	100.00	0.0000	100.00	100	33-145
Anthracene	100.00	0.0000	100.00	100	27-133
Benzidine	100.00	0.0000	100.00	100	D-110
Benzo(a)anthracene	100.00	0.0000	100.00	100	33-143
Benzo(b)fluoranthene	100.00	0.0000	100.00	100	24-159
Benzo(k)fluoranthene	100.00	0.0000	100.00	100	11-162
Benzo(g,h,i)perylene	100.00	0.0000	100.00	100	D-219
Benzo(a)pyrene	100.00	0.0000	100.00	100	17-163
bis(2-Chloroethoxy)meth	100.00	0.0000	100.00	100	33-184
bis(2-Chloroethyl)ether	100.00	0.0000	100.00	100	12-158
bis(2-Chloroisopropyl)e	100.00	0.0000	100.00	100	36-166
Bis(2-ethylhexyl)phthal	100.00	0.0000	100.00	100	8-158
4-Bromophenyl-phenyleth	100.00	0.0000	100.00	100	53-127
Butylbenzylphthalate	100.00	0.0000	100.00	100	D-152
4-Chloro-3-methylphenol	100.00	0.0000	100.00	100	22-147
2-Chloronaphthalene	100.00	0.0000	100.00	100	60-118
2-Chlorophenol	100.00	0.0000	100.00	100	23-134
4-Chlorophenyl-phenylet	100.00	0.0000	100.00	100	25-158
Chrysene	100.00	0.0000	100.00	100	17-168
Dibenz(a,h)anthracene	100.00	0.0000	100.00	100	D-227
1,2-Dichlorobenzene	100.00	0.0000	100.00	100	32-129
1,3-Dichlorobenzene	100.00	0.0000	100.00	100	D-172
1,4-Dichlorobenzene	100.00	0.0000	100.00	100	20-124
3,3'-Dichlorobenzidine	100.00	0.0000	100.00	100	D-262
2,4-Dichlorophenol	100.00	0.0000	100.00	100	39-135
Diethylphthalate	100.00	0.0000	100.00	100	D-114
2,4-Dimethylphenol	100.00	0.0000	100.00	100	32-119
Dimethylphthalate	100.00	0.0000	100.00	100	D-112
Di-n-butylphthalate	100.00	0.0000	100.00	100	1-118
4,6-Dinitro-2-methylphe	100.00	0.0000	100.00	100	D-181
2,4-Dinitrophenol	100.00	0.0000	100.00	100	D-191
2,4-Dinitrotoluene	100.00	0.0000	100.00	100	39-139
2,6-Dinitrotoluene	100.00	0.0000	100.00	100	50-158
Di-n-octylphthalate	100.00	0.0000	100.00	100	4-146
Fluoranthene	100.00	0.0000	100.00	100	26-137
Fluorene	100.00	0.0000	100.00	100	59-121
Hexachlorobenzene	100.00	0.0000	100.00	100	D-152
Hexachlorobutadiene	100.00	0.0000	100.00	100	24-116
Hexachlorocyclopentadie	100.00	0.0000	100.00	100	15- 70
Hexachloroethane	100.00	0.0000	100.00	100	40-113
Indeno(1,2,3-cd)pyrene	100.00	0.0000	100.00	100	D-171
Isophorone	100.00	0.0000	100.00	100	21-196
Naphthalene	100.00	0.0000	100.00	100	21-133
Nitrobenzene	100.00	0.0000	100.00	100	35-180
2-Nitrophenol	100.00	0.0000	100.00	100	29-182
4-Nitrophenol	100.00	0.0000	100.00	100	D-132
N-Nitroso-di-methylamin	100.00	0.0000	100.00	100	29- 66
N-Nitrosodiphenylamine	100.00	0.0000	100.00	100	23-100
N-Nitroso-di-n-propylam	100.00	0.0000	100.00	100	D-230
Pentachlorophenol	100.00	0.0000	100.00	100	14-176
Phenanthrene	100.00	0.0000	100.00	100	54-120
Phenol	100.00	0.0000	100.00	100	5-112
Pyrene	100.00	0.0000	100.00	100	52-115
1,2,4-Trichlorobenzene	100.00	0.0000	100.00	100	44-142
2,4,6-Trichlorophenol	100.00	0.0000	100.00	100	37-144

Table 6 - BNA STANDARDS USED

base/neutral mix (2000ppm)		**acids mix (2000ppm)**
bis(2-Chloroethyl)ether		2,4-Dinitrophenol
bis(2-Chloroisopropyl)ether		2-Methylphenol
1,3-Dichlorobenzene		4-Methylphenol
1,2-Dichlorobenzene		Benzoic acid
1,4-Dichlorobenzene		4,6-Dinitro-2-methylphenol
Hexachloroethane		4-Nitrophenol
N-Nitroso-di-methylamine		2,4,5-Trichlorophenol
N-Nitroso-di-n-propylamine		2,4,6-Trichlorophenol
2,4-Dinitrotoluene		Phenol
2,6-Dinitrotoluene		Pentachlorophenol
Fluorene		2-Nitrophenol
Dimethylphthalate		4-Chloro-3-methylphenol
Hexachlorocyclopentadiene		2,4-Dichlorophenol
Anthracene		2,4-Dimethylphenol
4-Bromophenyl-phenylether		Benzoic acid
Di-n-butylphthalate		
bis(2-Chloroethoxy)methane		
1,2-Diphenylhydrazine		**semivoa misc. mix(2000ppm)**
Fluoranthene		Aniline
Hexachlorobenzene		Benzyl alcohol
N-Nitrosodiphenylamine		Carbazole
Phenanthrene		4-Chloroaniline
Hexachlorobutadiene		Dibenzofuran
Isophorone		2-Methylnaphthalene
Naphthalene		2-Nitroaniline
Nitrobenzene		3-Nitroaniline
1,2,4-Trichlorobenzene		4-Nitroaniline
Acenaphthene		Pyridine
Acenaphthylene		
2-Chloronaphthalene		
4-Chlorophenyl-phenylether		**Benzidine mix (2000ppm)**
Diethylphthalate		Benzidine
Benzo(a)anthracene		3,3'-Dichlorobenzidine
Bis(2-ethylhexyl)phthalate		
Butylbenzylphthalate		
Chrysene		**Individual or misc. mixes (2000/5000/20,000ppm)**
p-(Dimethylamino)azobenzene		Caprolactam
Pyrene		Benzaldehyde
Benzo(b)fluoranthene		Atrazine
Benzo(k)fluoranthene		1,1'-Biphenyl
Benzo(g,h,i)perylene		1,4-Dioxane
Benzo(a)pyrene		1-methylnapthalene
Dibenz(a,h)anthracene		2,6-dichlorophenol
Di-n-octylphthalate		2,3,4,6-tetrachlorophenol
Indeno(1,2,3-cd)pyrene		

BNA internals (2000ppm)		Acid surrogate (7500ppm)
1,4-Dichlorobenzene-d4 (I.S)(1)		2-Fluorophenol (S)
Naphthalene-d8 (I.S)(35)		Phenol-d6 (S)
Acenaphthene-d10 (I.S) (59)		2,4,6-Tribromophenol (S)
Phenanthrene-d10 (I.S) (79)		2,-Chlorophenol-d4 (S)
Chrysene-d12 (I.S) (92))		BN surrogate (5000ppm)
Perylene-d12 (I.S) (101)		Nitrobenzene-d5 (S)
		Terphenyl-d14 (S)
		2-Fluorobiphenyl (S)
		1,2-Dichlorobenzene-d4 (S)

Table 7 INTERNAL STANDARD ASSOCIATION / QUANT MASS – Standard SVOC analysis					
COMPOUND	***I.S**	**Q.M**	**COMPOUND**	***I.S**	**Q.M**
1,4-Dichlorobenzene-d4 **(I.S)(1)**		152	Dimethylphthalate	59	163
Acetophenone	1	105	Hexachlorocyclopentadiene	59	237
Aniline	1	93	2,4-Dinitrophenol	59	184
Benzaldehyde	1	106	2,4-Dinitrotoluene	59	165
Benzyl alcohol	1	108	2,6-Dinitrotoluene	59	165
bis(2-Chloroethyl)ether	1	93	Fluorene	59	166
bis(2-Chloroisopropyl)ether	1	45	2-Nitroaniline	59	65
1,3-Dichlorobenzene	1	146	3-Nitroaniline	59	138
1,2-Dichlorobenzene	1	146	4-Nitroaniline	59	138
1,4-Dichlorobenzene	1	146	4-Nitrophenol	59	65
2-Methylphenol	1	108	2,4,5-Trichlorophenol	59	196
4-Methylphenol	1	108	2,4,6-Trichlorophenol	59	196
3-Methylphenol	1	108	2-Fluorobiphenyl (S)	59	172
Phenol	1	94	Phenanthrene-d10 **(I.S) (79)**		188
Pyridine	1	79	Anthracene	79	178
Hexachloroethane	1	117	Atrazine	79	200
N-Nitroso-di-methylamine	1	42	4-Bromophenyl-phenylether	79	248
N-Nitroso-di-n-propylamine	1	70	Carbazole	79	167
2-Fluorophenol (S)	1	112	Di-n-butylphthalate	79	149
Phenol-d6 (S)	1	99	4,6-Dinitro-2-methylphenol	79	198
Naphthalene-d8 **(I.S)(35)**		136	1,2-Diphenylhydrazine	79	77
Benzoic acid	35	105	Fluoranthene	79	202
bis(2-Chloroethoxy)methane	35	93	Hexachlorobenzene	79	284
Caprolactam	35	113	N-Nitrosodiphenylamine	79	169
4-Chloroaniline	35	127	Pentachlorophenol	79	266
4-Chloro-3-methylphenol	35	107	Phenanthrene	79	178
2,4-Dichlorophenol	35	162	2,4,6-Tribromophenol (S)	79	330
2,4-Dimethylphenol	35	107	Chrysene-d12 **(I.S) (92)**		240
Hexachlorobutadiene	35	225	Benzidine	92	184
Isophorone	35	82	Benzo(a)anthracene	92	228
2-Methylnaphthalene	35	141	Bis(2-ethylhexyl)phthalate	92	149
Naphthalene	35	128	Butylbenzylphthalate	92	149
Nitrobenzene	35	77	Chrysene	92	228
2-Nitrophenol	35	139	3,3'-Dichlorobenzidine	92	252
1,2,4-Trichlorobenzene	35	180	p-(Dimethylamino)azobenzene	92	225
Catechol	35	110	Pyrene	92	202
Nitrobenzene-d5 (S)	35	82	Terphenyl-d14 (S)	92	244
Acenaphthene-d10 **(I.S) (59)**		164	Perylene-d12 **(I.S) (101)**		264
Acenaphthene	59	153	Benzo(b)fluoranthene	101	252
Acenaphthylene	59	152	Benzo(k)fluoranthene	101	252
1,1'-Biphenyl	59	154	Benzo(g,h,i)perylene	101	276
2-Chloronaphthalene	59	162	Benzo(a)pyrene	101	252
4-Chlorophenyl-phenylether	59	204	Dibenz(a,h)anthracene	101	278
Dibenzofuran	59	168	Di-n-octylphthalate	101	149
Diethylphthalate	59	149	Indeno(1,2,3-cd)pyrene	101	276
I.S=internal standard, Q.M=quant mass, S=surrogate					

Table 7 INTERNAL STANDARD ASSOCIATION / QUANT MASS – Standard SVOC analysis (contd)					
COMPOUND	***I.S**	**Q.M**	**COMPOUND**	***I.S**	**Q.M**
1,4-Dichlorobenzene-d4 **(I.S)(1)**		152	Diphenylamine	59	169
Pentachloroethane	1	167	Thionazin	59	107
2-Picoline	1	93		59	
N-Nitrosomethylethylamine	1	88		59	
Methyl methanesulfonate	1	80		59	
N-Nitrosodiethylamine	1	102		59	
Ethyl methanesulfonate	1	79		59	
N-Nitrosopyrrolodine	1	100		59	
N-Nitrosomorpholine	1	56		59	
0-Toluidine	1	106		59	
	1		Phenanthrene-d10 **(I.S) (79)**		188
	1		4-Nitroquinoline-1-oxide	79	190
	1		Phenacetin	79	108
	1		4-Aminobiphenyl	79	169
	1		Pentachloronitrobenzene	79	237
	1		Sulfotepp	79	97
	1		Phorate	79	75
Naphthalene-d8 **(I.S)(35)**		136	Diallate	79	86
1- Methylnaphthalene	35	141	Dimethoate	79	87
N-Nitrosopiperidine	35	114	Pronamide	79	173
a,a-Dimethylphenethylamine	35	58	Disulfoton	79	88
O,O,O-Triethylphosphorothioate	35	97	Dinoseb	79	211
Hexachloropropene	35	213		79	
2,6-Dichlorophenol	35	162		79	
p-Phenylenediamine	35	108	Chrysene-d12 **(I.S) (92)**		240
N-Nitrosodi-n-butylamine	35	84	Methapyrilene	92	97
Safrole	35	162	p-(Dimethylamino)azobenzene	92	225
1,2,4,5-Tetrachlorobenzene	35	216	Chlorobenzilate	92	251
	35		3,3'- Dimethylbenzidine	92	212
	35		2- Acetylaminofluorene	92	181
	35		7,12-Dimethylbenz[a]anthracene	92	256
	35		Aramite	92	185
	35		Methyl parathion	92	109
	35		Parathion	92	109
Acenaphthene-d10 **(I.S) (59)**		164	Isodrin	92	193
Isosafrole	59	162	Kepone	92	272
1,4-Naphthoquinone	59	158	Famphur	92	218
Pentachlorobenzene	59	250	Perylene-d12 **(I.S) (101)**	101	
2-Naphthylamine	59	143	3-Methylcholanthrene	101	268
1-Naphthylamine	59	143	Hexachlorophene	101	196
2,3,4,6-Tetrachlorophenol	59	232		101	
5-Nitro-o-toluidine	59	152		101	
I.S=internal standard, Q.M=quant mass, S=surrogate					

Table 8: LOW CONCENTRATION PAH INTERNAL STANDARD/SURROGATE SPECIFICATIONS

INTERNAL STD ASSOCIATION
Phenanthrene-d10 (IS)
Naphthalene
2-Methylnaphthalene
1-Methylnaphthalene
2-Fluorobiphenyl(SUR)
Acenaphthylene
Acenaphthene
Fluorene
Phenanthrene
Anthracene
Fluoranthene
Pyrene
Perylene-d12 (IS)
Terphenyl-d14(SUR)
Benzo(a)anthracene
Chrysene
Benzo(b)fluoranthene
Benzo(k)fluoranthene
Benzo(a)pyrene
Indeno(1,2,3-cd)pyrene
Dibenz(a,h)anthracene
Benzo(g,h,i)perylene

FIGURE 1
TAILING FACTOR CALCULATION

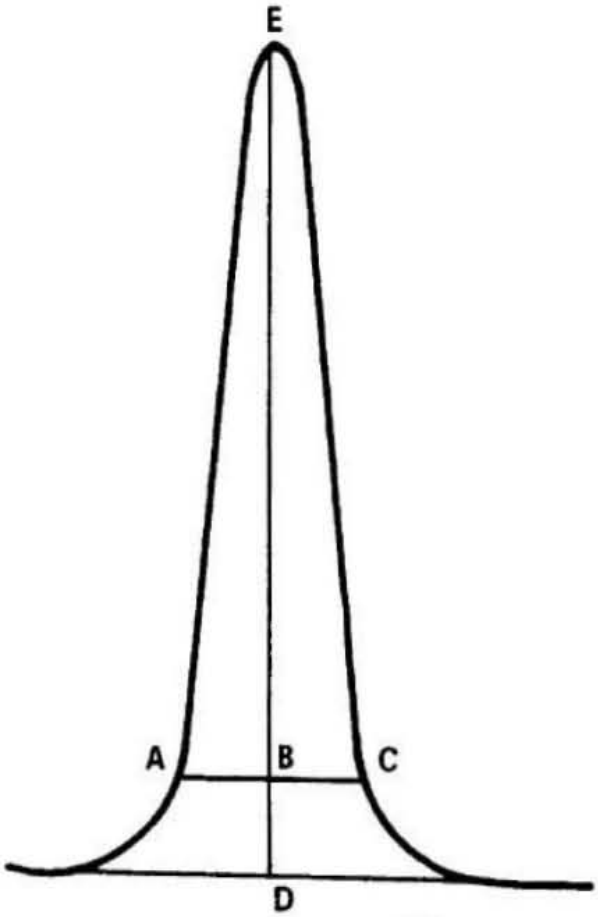

$$\text{TAILING FACTOR} = \frac{BC}{AB}$$

Example calculation: Peak Height = DE = 100 mm
10% Peak Height = BD = 10 mm
Peak Width at 10% Peak Height = AC = 23 mm
AB = 11 mm
BC = 12 mm

Therefore: Tailing Factor $= \frac{12}{11} = 1.1$

Table 9, DFTPP Tuning Criteria

Mass	Ion Abundance Criteria
51	30-60% of mass 198
68	<2% of mass 69
70	<2% of mass 69
127	40-60% of mass 198
197	<1% of mass 198
198	Base peak, 100% relative
199	5-9% of mass 198
275	10-30% of mass 198
365	>1% of mass 198
441	Present, but less than mass 443
442	>40% of mass 198
443	17-23% of mass 442

Note: While 8270D table 3 indicates different criteria, section 11.3.1.2 allows the use of alternate criteria.

EMPIRICAL LABORATORIES, LLC
STANDARD OPERATING PROCEDURE

ORGANICS: SOP 202 **REVISION #: 23** **EFFECTIVE DATE: 20100909**

GC/MS VOLATILES BY EPA METHOD E624 & SW846 METHOD 8260B INCLUDING APPENDIX IX COMPOUNDS

APPROVALS:

Lab Director: _____ Date: 9/9/10

Data Quality Manager: _____ Date: 9/9/10

Section Supervisor: _____ Date: 9/9/10

Changes Summary

Revision 23, 09/09/10

- This SOP is an update from Revision 22 dated 09/30/09.
- Tables 1 and 2 have been updated with appropriate reference updates.
- Tables 5-7 have been added.

Revision 22, 9/30/09

- The SOP is an update from Revision 21 dated 09/11/08
- The SOP is formatted to include all 22-elements required per the NELAC standards
- The laboratory's revision of all technical SOPs now includes a Table of Contents that provides the map of the technical information contained within the SOP.
- Additional requirements, based upon the DoD QSM 4.1, have been integrated into the routine sample flow; however, if the requirement is different from routine sample flow, then the requirement is outlined and documented as such to be followed only when DoD samples are analyzed.

Table of Contents

1. Identification of the Test Method
2. Applicable Matrix or Matrices
3. Detection Limit
4. Scope of Application, Including components to be Analyzed
5. Summary of the Test Method
6. Definitions
7. Interferences
8. Safety
9. Equipment & Supplies
10. Reagents and Standards
11. Sample Collection, Preservation, Shipment, and Storage
12. Quality Control
13. Calibration and Standardization
14. Procedure
15. Data Analysis and Calculations
16. Method Performance
17. Pollution Prevention
18. Data Assessment and Acceptance Criteria for Quality Control Measures
19. Contingencies for Handling out-of-control or unacceptable data
20. Waste Management
21. References
22. Tables, Diagrams, Flowcharts and Validation Data

1. Identification of the Test Method

1.1 This SOP is compliant with methods – EPA Method 624 and SW-846 Method 8260B

2. Applicable Matrix or Matrices

2.1 This SOP is applicable to – The analysis of volatile organic compounds in a variety of matrices including but not limited to soils, sediments, ground and surface waters, aqueous sludge, oily wastes, etc.

3. Detection Limit: See **Table 1** of this SOP.

4. Scope of Application, Including components to be Analyzed

4.1 This SOP is based primarily on SW-846 Method 8260B. Methods SW-846 Method 8000B; *Federal Register* Method 624; and CLP Method for Volatiles have also been used in the development of this SOP. The analyses by these various methods are clearly defined in the respective regulatory manuals. A good understanding of these different methods is essential to the performance of each method. Each parameter that is analyzed and reported under the scope of this SOP is listed in **Table 1** of this SOP. When applicable, surrogate and Internal Standard Analytes are listed and indicated as such within this table.

5. Summary of the Test Method

5.1 After sample preparation, the sample is introduced into the GC/MS generally using purge and trap but sometimes using direct injection (see SW-846 Methods 5030B, 5035 and 3585 for preparation). In purge and trap, the analytes are stripped from the sample using helium and trapped on an adsorbent tube. The tube is heated while being backflushed with helium to carry the analytes to the GC/MS system. The analytes are separated in the gas chromatograph by a combination of the temperature program and the capillary column. The analytes are then detected by the mass spectrometer. Analytes are identified by comparing the mass spectra of known standards with the mass spectra of the sample. Analytes are quantitated relative to known standards using the internal standard method.

6. Definitions

6.1 Laboratory Quality System SOP QS08 **"**Technical / Operational Definitions, Minimum Essential Quality Control Elements, and Laboratory Calibration Procedures" provides information on the commonly used definitions.

7. Interferences

7.1 Section 3.0 of SW-846 Method 8260B details interferences and potential problems which may be encountered when dealing with volatile analyses.

8. Safety

8.1 Laboratory SOP QS13 "Safety Program & Chemical Hygiene Plan" discusses the safety program that is to be followed labwide.

9. Equipment & Supplies

9.1 GC : HP 5890 or 6890, temperature programmable, suitable for split or splitless injection.

9.2 Column: DB-VRX 60 meter x 0.25 mm I.D. 1.4 µm film thickness or 20 meter x 0.18 mm ID 1.0 µm film thickness silicon coated fused silica capillary column or equivalent.

9.3 M.S.: HP 5971, 5972 or 5973 capable of scanning 35 to 500 amu every one second or less, using 70 volts electron energy in electron impact ionization mode. The MS is capable of producing a mass spectrum for p-Bromofluorobenzene, BFB, which meets all tuning criteria for EPA methods [when 1 µL (50 ng) of the GC/MS tuning standard is introduced to the GC.]

9.4 Purge and Trap Unit

9.4.1 Concentrators: Tekmar LSC 2000 or Tekmar/Dohrmann 3000/3100 Sample Concentrator equipped with Supelco trap number 2-1066-U or 2-4920-U VOCARB 3000 providing good delivery for all target compounds.

9.4.2 Autosamplers: Varian Archon 51 position programmable autosampler with 5ml to 25ml water and heated soil capability.

9.5 Acquisition Software: HP chemstation system interfaced to the GC/MS. The system acquires and stores data throughout the chromatographic programs.

9.6 Data Processing Software: TargetDB on Windows NT data system interfaced to the HP Chemstation. The system accepts and stores acquired data. It plots by extracted ion current profile (EICP). The system is also capable of integrating the abundances of any EICP between specified time or scan-number limits. NBS75K mass spectral library is installed.

9.7 Microsyringes – 1.0, 5.0,10, 25, 100, 250, 500 and 1000 µL.

9.8 Syringes – 5, 25 and 50 mL, gas-tight with Luer end.

9.9 Balance - analytical, 0.0001 g; top-loading, 0.01 g.

9.10 Disposable pasteur pipets.

9.11 Volumetric flasks, Class A - 2 mL, 5 mL, 10 mL, 50 mL, 100 mL and 250 mL with ground-glass stoppers.

9.12 Spatula - stainless steel.

9.13 Glass scintillation vials - 20mL with screw caps.

9.14 Nitrile Gloves

9.15 pH paper (measures pH from 0-14).

10. Reagents and Standards

10.1 The laboratory's LIMS system allows for complete documentation and for the traceability of reagents and standards used within the laboratory. The following information relates to the specific reagents and standards used for the performance of the method:

10.2 Organic-free reagent water - obtained from the charcoal filter system in the VOA laboratory.

10.3 Methanol - Purge and trap grade (EM-Omnisolv EM-0482-6 or equivalent)

10.4 Methanol - suitable for use in gas chromatography (B&J Omnisolv MX0484- 1, or equivalent)

10.5 Sodium bisulfate, $NaHSO_4$ – ACS reagent grade, or equivalent. Available from Aldrich (Part No. 30,782-3).

10.6 Stock standards are purchased in mixtures from reputable vendors. The date they are received is noted on the label. The date they are opened is noted on the label and recorded in the LIMS system along with their lot number and vendor and given a sequential number. Each standard label is completed with the standard number, name, preparation date, expiration date, solvent and analyst initials. Stock standards, when opened, have an expiration date of 6 months, **except for gas standards for South Carolina samples which have a one week expiration date**. All stocks and standards are stored in the freezer at a temperature of -15°C ± 5°C or less from the date they are received/prepared. The freezer temperature is monitored daily with a calibrated thermometer (annual calibration for liquid in glass and quarterly calibration for digital) and recorded with calibration correction in the VOA refrigerator/freezer logbook. Makeup of common standards is detailed below. See standard ID in LIMS system for makeup of other standards.

10.6.1 The Bromofluorobenzene (BFB) tuning standard is prepared as follows: Using a 50µL syringe, 40µL of standard (BFB @ 2500ng/µL) is injected into a 2mL volumetric flask containing approximately 1.0mL P&T methanol (Vendor,Lot) and diluted to volume with same making a 50ng/µL standard. After capping and inverting 3 times, the solution is transferred to a labeled 2ml, teflon-lined, screw-capped vial and stored in the freezer at -15°C ± 5°C or less for up to 6 months **(1 week for South Carolina samples)**. A direct injection of 1µL (or equivalent purge) is used to tune the instrument.

10.6.2 The internal and surrogate standards are prepared as follows: Using the indicated syringe, the indicated amount of standard is injected into a 50 mL volumetric flask containing P&T methanol (Vendor,Lot) and diluted to volume with same making a 150ng/µL standard. After capping and inverting 3 times, the solution is transferred to the Archon standard vial and stored under helium for 1 month or less. Each 8260/624 sample is automatically injected with 1µL of this standard. (The internal standard/surrogate solution may be replaced if the –50%-200% criteria fails in the CCV when calculated against the previous CCV.)

Standard	Conc. (ng/µL)	Syringe (µL)	Amount (µL)
8260 ISTD Mix	2500	1000	3000
Surr. Mix	2500	1000	3000

10.6.3 Calibration standards are prepared from the vendor stock standards at appropriate concentrations as follows. Occasionally unusual compounds are added to the mix so it is best to check the LIMS for exact standard makeup. Note: for laboratory control spikes (LCS), alternate sources or lot numbers from the main calibration standard are used to make the LCS standard.

10.6.3.1 Primary Standard: Using the indicated syringe, the indicated amount of standard is injected into a 2mL volumetric flask containing approximately 1.0mL P&T methanol (Vendor,Lot) and diluted to volume with same to make a 100-500ng/µL standard. After capping and inverting 3 times, the solution is transferred into 2ml amber vial w/mini-inert valve and stored in the freezer at -15°C ± 5°C for 1 week. A 100µg/L (5mL purge) standard is made using 50µL of this standard to 50mLof reagent water.

Stock Standard(CCV)	Conc (ng/µL)	Syringe(µL)	Amount(µL)	Final Conc (ng/µL)
2-CEVE **(Cat#30265)**	20000	25	20	200
Vinyl Acetate **(#3766)**	5000	100	80	200
Ketones **(cat#30006)**	5000	100	80	200
Liquid mix **(C-349H-07)**	2000	100	100	100
Custom mix **(CCS-1037)**	5000	50	40	100
Gases **(cat#30042)**	2000	100	100	100
Acrolein/Acrylonitrile **(CC2098.10)**	20,000	50	50	500

Additional compounds may be added such as Appendix IX. Refer to standard ID in LIMS system.

10.6.4 ICV/LCS/Matrix Spike Mix: A second source standard is used to check the validity of the gas and primary calibration standards used in analyzing the calibration curve. Using the indicated syringe, the indicated amount of standard is injected into a 2mL volumetric flask containing approximately 1.0mL P&T methanol (Vendor,Lot) and diluted to volume with same to make a 100-500ng/µL standard. After capping and inverting 3 times, the solution is transferred into 2ml amber vial w/mini-inert valve and stored in the freezer at -15°C ± 5°C for 1 week. A 50µg/L ICV/LCS/Matrix Spike is made using 25µL of this standard to 50mL of reagent water/Sample Matrix.

Stock Standard(ICV/LCS)	Conc (ng/µL)	Syringe(µL)	Amount(µL)	Final Conc (ng/µL)
2-CEVE	20,000	25	20	200
Vinyl Acetate	5000	100	80	200
Ketones	5000	100	80	200
Liquid mix	2000	100	100	100
Custom Mix	5000	50	40	100
Gases	2000	100	100	100
Acrolein/Acrylonitrile	50,000	50	50	500

11. Sample Collection, Preservation, Shipment, and Storage

11.1 Quality Systems SOP QS10 related to Sample Receipt, Handling, & Processing provides details for collection, preservation, shipment, and storage.

11.2 All water samples are stored in the "True" refrigerator in the VOA lab at a temperature of 4°C. All unpreserved soil samples in TerraCore or encores are stored in the freezer in the VOA lab. All soil samples in bulk jars or chemically preserved TerraCore are stored in the soil walk-in refrigerator at a temperature of 4°C. Non-preserved water volatile samples have a holding time of 7 days from date of sampling. Preserved water samples and soil volatile samples have a holding time of 14 days from date of sampling (unless otherwise specified for the project). The temperature is monitored daily with a calibrated thermometer (annual calibration for liquid in glass and quarterly calibration for digital) and recorded with calibration correction in the VOA refrigerator/freezer logbook. The weekend temperature is monitored with a Min/Max thermometer and recorded upon arrival next business day.

12. Quality Control

12.1 Quality Systems SOP QS08 "Technical / Operational Definitions, Minimum Essential Quality Control Elements, and Laboratory Calibration Procedures" outlines details related to laboratory wide protocols on quality control.

12.1 Internal Standards - All samples and QC are spiked with internals. See **Table 2** for acceptance criteria and corrective action.

12.2 Surrogates - All samples and QC are spiked with surrogates. See **Table 2** of this SOP for acceptance criteria and corrective action.

12.3 LCS Sample - An LCS is analyzed every 12 hour tune. To prepare the LCS, a blank is spiked with standards prepared from an alternate vendor or lot number from the calibration standards. Note: the concentration of the LCS will be 20 µg/L when analyzing 624 samples (QC Check Sample). See **Table 2** of this SOP for acceptance criteria and corrective action. **When analyzing samples for South Carolina the limits are 70-130% except for poor purgers which are 60-140%.**

12.4 Method Blanks - A method blank is analyzed every 12 hour tune. See **Table 2** of this SOP for acceptance criteria and corrective action..

12.5 Matrix Spike/Matrix Spike Duplicate (MS/MSD) Sample - 1 in 20 samples are spiked for an MS/MSD with the LCS standard. See **Table 2** of this SOP for acceptance

criteria and corrective action. MS data evaluation must include the consideration of the following factors.

12.5.1 Sample matrix - If the sample is a soil, grab sample or sequentially collected water sample it may affect the %R and RPD of the MS/MSD. A water sample which was taken from the same VOA vial for the original sample and the MS/MSD should have very good RPDs unless there has been a method problem. Corrective action must be taken in the form of reanalysis if a method problem is indicated.

12.5.2 Original sample concentration - If a spiked compound has a problem and the concentration of that compound in the original sample was four or more times the concentration of the spike, no further corrective action may be necessary other than the generation of a corrective action report to document the problem.

12.5.3 MS vs. MSD - If a spiked compound has a problem in both the MS and MSD, review the LCS and if acceptable no further action may be necessary since it is attributable to matrix effect.

12.5.4 Non-target Interference - The presence of significant non-target interference should be brought to the immediate attention of your supervisor who should discuss the problem with the client/project manager to determine the action to be taken.

13. Calibration and Standardization

13.1 Quality Systems **SOP QS08 "**Technical / Operational Definitions, Minimum Essential Quality Control Elements, and Laboratory Calibration Procedures" related to Calibration Procedures provides laboratory wide protocols for calibration and standardization.

13.2 Chromatographic conditions – Refer to corresponding instrument maintenance log for current gas chromatograph, mass spectrometer, and concentrator conditions.

13.3 System Bakeout - Prior to analysis an instrument blank is analyzed.

NOTE: Further cleaning may be accomplished by backflushing the lines with methanol and then analyzing blanks overnight.

13.4 Tuning - Prior to any calibration or analysis, BFB tuning criteria must be met for a 1.0µL injection of the tuning standard. See **Table 5** of this SOP for acceptance criteria. Tune must be met every 12 hours sample analysis is to be performed **(every 24 hours for *Federal Register* Method 624 except for South Carolina which only allows 12 hours).** The mass spectrum of BFB is acquired as follows: by using the BFB method in Target (which uses three scans with backround subtraction) to process the BFB data file. If the BFB tune does not pass criteria corrective action should be taken

13.5 **Calibration:** Calibration standards are made up in water using the appropriate amount of the methanol standard. See the LIMS for preparation of standards. **Calibration for soils for South Carolina requires that 5mL of sodium bisulfate**

solution is added to each calibration standard made if the samples will be preserved with sodium bisulfate. All manual calibration integrations must be approved by the section manager or designated peer reviewer.

13.5.1 Initial Calibration - An initial calibration curve at no less than five (six if using a quadratic curve fit) concentration levels must be analyzed and shown to meet the initial calibration criteria before any sample analysis may be performed. **For Arizona samples the surrogates must also be calibrated at a minimum of five concentrations.** See **Table 2** of this SOP for acceptance criteria and corrective action. The lowest standard must be less than or equal to the reported quantitation limit and the highest standard must not exceed the linear range of the detector. Any manual integrations are documented by inclusion of the integrated signals (**before and after manual integration**) initialed, dated, and reason with the quantitation report and chromatograms. All manual calibration integrations must be approved by the section manager or designated peer reviewer Any response factors less than 0.050 must be supported by the mass spectrum of the lowest standard. **No quadratic curves for South Carolina.**

CCCs:	1,1-Dichloroethene	Toluene
	Chloroform	Ethylbenzene
	1,2-Dichloropropane	Vinyl chloride

SPCCs:	Chloromethane	0.10
	1,1-Dichloroethane	0.10
	Bromoform	0.10
	Chlorobenzene	0.30
	1,1,2,2-Tetrachloroethane	0.30

13.5.2 Initial Calibration Verification (ICV) - A second source standard is prepared at or near the CCV concentration and calculated against the initial calibration curve, then shown to meet the calibration check criteria before any sample analysis may be performed. See **Table 2** of this SOP for acceptance criteria and corrective action. Any manual integrations are documented by inclusion of the integrated signals (**before and after manual integration**) initialed, dated, and reason with the quantitation report and chromatograms. All manual ICV integrations must be approved by the section manager or designated peer reviewer.

13.5.3 Continuing Calibration Verification (CCV) - A CCV is analyzed every 12 hour tune and calculated against the initial calibration curve, then shown to meet the calibration check criteria before any sample analysis may be performed. See **Table 2** of this SOP for acceptance criteria and corrective action. Any manual integrations are documented by inclusion of the integrated signals (**before and after manual integration**) initialed, dated, and reason with the quantitation report and chromatograms. All manual CCV integrations must be approved by the section manager or designated peer reviewer. **.**

NOTE: Acceptance criteria for method 624 consists of meeting recovery limits found in table 5 of the method for a QC check sample. This QC check

sample is made from a separate source or lot number than the calibration standard at a concentration of 20 µg/L.

14. **Procedure**

14.1 LCS - An LCS is analyzed every 12 hour tune.Using standards prepared from an alternate vendor or lot number, blank water is spiked at the 50 µg/L (5mL/soil) or 10 µg/L (25mL) level. See **Table 2** of this SOP for acceptance criteria and corrective action. **Note: the concentration of the LCS will be 20 µg/L when analyzing 624 samples (QC Check Sample).**

14.2 Method Blank - Prior to sample analysis, the system must be shown to be free of contamination through analysis of a method blank. See **Table 2** of this SOP for acceptance criteria and corrective action.

14.3 Sample Analysis - Prior to analysis, the samples are prepared for chromatography using the appropriate sample preparation method (5mL water, 25mL water, low soil, high soil, etc.) See SOP 225 for preparation of a 5035 soil sample. For a 5mL/25mL water sample, use the following procedure:

14.3.1 Load the vial into the Archon autosampler in the expected position.

14.3.2 Program the Archon for the loaded vial range and necessary dilutions, making sure the programmed method is set for the same volume as the purge vessel on the front of the LSC 2000 or 3000/3100 and that the Chemstation sequence matches the Archon sequence. Note: TCLP samples are analyzed at a 10x dilution. One TCLP sample is spiked per batch at receipt of leachates.

14.3.3 After analysis of the sample has been completed, check the pH of the sample using pH paper and verify it to be less than a pH of 2 (recorded on the sequence log). If it is not, record the pH on the sequence log and generate a non-conformance report. The sample report will have to be qualified for preservation if the analysis is being performed more than 7 days after sampling. [Note: TCLP samples do not require a pH check.]

14.4 **Instrument sequence**

An example of a typical instrument sequence log follows:

1-BFB Tune (12:00 am)
2-CCV
3-LCS
4-Method Blank
5-Sample
6-Sample
7-Sample
8-Sample
9-Sample
10-Sample
11-Sample
12-Sample
13-Sample
14-Sample

15-Sample
16-Sample
17-Sample MS
18-Sample MSD
19-BFB (12:00pm - 12 hours since last BFB/CCV)
20-CCV
21-LCS
22-Method Blank
23-Sample
24-Sample

14.5 Data Reduction/Evaluation - Each sample analysis sequence is documented using the computer run log generated on the chemstation. This run log is signed, dated and paginated then placed in a 3 ring binder for that instrument. After the sample has been analyzed, the data is processed through the TargetDB on Windows NT data system. Quantitative measurements are performed using the calculations found in section 15.2 of this SOP. The following must be checked to determine if the sample will need any reanalysis or dilution. See **Table 2** of this SOP for acceptance criteria and corrective action. Formal data evaluation is detailed in SOP QS05. **See SOP QS07 for guidance on manual integrations.**

14.5.1 Internal Standards - Areas counts and retention times.

14.5.2 Surrogates – Recoveries and retention times.
Federal Register **Method 624 contains no criteria for surrogate recovery.**

Surrogate	WATER	SOIL
Dibromofluoromethane	85-120	80-125
1,2-Dichloroethane-d4	85-135	75-140
Toluene-d8	85-115	80-120
Bromofluorobenzene	80-120	80-125

14.5.3 Analyte concentration.

14.5.4 Qualitative identification based on spectrum and retention time.

15. Data Analysis and Calculations

15.1 Quality Systems SOP QS09 "General and Commonly used Laboratory Calculations" provides details on general calculations used throughout the laboratory.

15.2 Calculations:

15.2.1 The RF is calculated as follows:

$$RF = \frac{A_s \times C_{is}}{A_{is} \times C_s}$$

where:
A_s = Peak area (or height) of the analyte or surrogate.
A_{is} = Peak area (or height) of the internal standard.
C_s = Concentration of the analyte or surrogate.

C_{is} = Concentration of the internal standard.

15.2.2 Calibration verification involves the calculation of the percent drift (linear) or the percent difference (average) of the instrument response between the initial calibration and each subsequent analysis of the verification standard. Use the equations below to calculate % Drift or % Difference, depending on the calibration procedure used.

$$\% \text{ Drift} = \frac{(\text{Calculated concentration} - \text{Theoretical concentration}) * 100}{\text{Theoretical Concentration}}$$

where the calculated concentration is determined from the initial calibration and the theoretical concentration is the concentration at which the standard was prepared.

$$\% \text{ Difference} = \frac{(\text{CCV RF} - \text{Average RF}) * 100}{\text{Average RF}}$$

where CCV RF is the response factor from the analysis of the verification standard and Average RF is the average response factor from the initial calibration. The % difference or % drift calculated for the calibration verification standard must be within ±20% for each CCC analyte, or for all target analytes if the CCCs are not target analytes, before any sample analyses may take place.

15.2.3 Concentration in water samples is calculated as follows: [Note: Using the units specified here for these terms will result in a concentration in units of ng/mL, which is equivalent to ug/L.]

$$\text{Concentration } (\mu\text{g/L}) = \frac{(A_s)(C_{is})(D)(V_i)}{(A_{is})(\overline{RF})(V_s)(1000)}$$

where:

A_s = Area (or height) of the peak for the analyte in the sample.

A_{is} = Area (or height) of the peak for the internal standard.

C_{is} = Concentration of the internal standard in the volume purged in ug/L.

D = Dilution factor, if the sample was diluted prior to analysis. If no dilution was made, D = 1. The dilution factor is always dimensionless.

V_i = For purge-and-trap analysis, V_i is not applicable and is set at 1.

$\overline{RF}$ = Mean response factor from the initial calibration.

V_s = Volume of the aqueous sample purged (mL). If units of liters are used for this term, multiply the results by 1000.

15.2.4 Concentration in non-aqueous samples is calculated as follows: [Note: Using the units specified here for these terms will result in a concentration in units of ng/g, which is equivalent to ug/kg.]

$$\text{Concentration } (\mu\text{g/kg}) = \frac{(A_s)(C_{is})(D)(V_i)}{(A_{is})(\overline{RF})(W_s)(1000)}$$

where: A_s, A_{is}, C_{is}, D, and $\overline{RF}$ are the same as for aqueous samples.
W_s = Weight of sample extracted (g). Either a dry weight or wet weight may be used, depending upon the specific application of the data. If units of kilograms are used for this term, multiply the results by 1000.

16. **Method Performance**

16.1 Demonstration of Capability (DOC): Each analyst must perform a DOC prior to reporting data. The analyst must prepare (for prep technicians) and analyze (analysts reviewing and reporting data) 4-LCS samples. The data is calculated for accuracy and precision requirements. The DOC form is completed by each analyst and then provided to the supervisor for further processing and approval. See **Table 2** for acceptance criteria.

17. **Pollution Prevention**

17.1 Quantity of chemicals purchased should be based on expected usage during its shelf-life and the disposal cost of unused material. Actual reagent preparation volumes should reflect anticipated usage and reagent stability.

18. **Data Assessment and Acceptance Criteria for Quality Control Measures**

18.1 Quality Control SOP QS05, "Data Deviations / Interpretations / Exceptions: Laboratory Non-Conformance / Corrective Action Procedures, Decision Making Guidelines for Evaluating Laboratory Analytical Sample and Quality Control Results", provides details on data assessment and acceptance criteria for Quality Control Measures. **Table 2** of this SOP provides information on QC samples, frequency, and the associated criteria specific to the performance of this method.

19. **Contingencies for Handling out-of-control or unacceptable data**

19.1 Quality Control SOP QS05, "Data Deviations / Interpretations / Exceptions: Laboratory Non-Conformance / Corrective Action Procedures, Decision Making Guidelines for Evaluating Laboratory Analytical Sample and Quality Control Results", provides details on handling out of control data. Table 2 within this SOP also lists corrective actions associated with the failure of the various QC samples employed for the performance of this method.

20. **Waste Management.**

20.1 Laboratory SOP QS14 on Waste Handling discusses general guidelines for the appropriate handling of wastes and the laboratory program on waste management.

21. **References**

21.1 40 CFR, Part 136; Appendix A
21.2 Test Methods for Evaluating Solid Waste, SW-846, Third Edition and updates
21.3 National Environmental Laboratory Accreditation Conference; CH. 5, 2001
21.4 USACE, EM 200-1-3; Appendix 1; Shell, 2/2001
21.5 DOD Quality Systems Manual for Environmental Laboratories version 3, 3/2005

21.6 DOD Quality Systems Manual for Environmental Laboratories version 4.1, 4/2009

22. Tables, Diagrams, Flowcharts and Validation Data

22.1 Table 1, all applicable parameters with the applicable DL(MDL)/LOD/LOQ(MRL).
22.2 Table 2, QA/QC summary table
22.3 Table 3, Technical Completeness / Accuracy Checklist
22.4 Table 4, Data Reviewers Checklist(s)
22.5 Table 5, BFB Tuning Criteria
22.6 Table 6, Analyst Checklist
22.7 Table 7, INTERNAL STANDARD ASSOCIATION

Table 1 – DL/LOD/LOQ

Analyte	MDL/DL	LOD	MRL/LOQ	Units
1,1,1,2-Tetrachloroethane	1.25	2.50	5.00	ug/Kg
1,1,1-Trichloroethane (1,1,1-TCA)	1.25	2.50	5.00	ug/Kg
1,1,2,2-Tetrachloroethane	1.25	2.50	5.00	ug/Kg
1,1,2-Trichloro-1,2,2-trifluoroethane (CFC-113; Freon 113)	2.50	5.00	10.0	ug/Kg
1,1,2-Trichloroethane	1.25	2.50	5.00	ug/Kg
1,1-Dichloroethane (1,1-DCA)	1.25	2.50	5.00	ug/Kg
1,1-Dichloroethene (1,1-DCE)	1.25	2.50	5.00	ug/Kg
1,1-Dichloropropene	1.25	2.50	5.00	ug/Kg
1,2,3-Trichlorobenzene	1.25	2.50	5.00	ug/Kg
1,2,3-Trichloropropane	1.25	2.50	5.00	ug/Kg
1,2,4-Trichlorobenzene	1.25	2.50	5.00	ug/Kg
1,2,4-Trimethylbenzene	1.25	2.50	5.00	ug/Kg
1,2-Dibromo-3-chloropropane (DBCP)	2.50	5.00	10.0	ug/Kg
1,2-Dibromoethane (EDB)	1.25	2.50	5.00	ug/Kg
1,2-Dichlorobenzene	1.25	2.50	5.00	ug/Kg
1,2-Dichloroethane (EDC)	1.25	2.50	5.00	ug/Kg
1,2-Dichloropropane	1.25	2.50	5.00	ug/Kg
1,3,5-Trimethylbenzene	1.25	2.50	5.00	ug/Kg
1,3-Dichlorobenzene	1.25	2.50	5.00	ug/Kg
1,3-Dichloropropane	1.25	2.50	5.00	ug/Kg
1,4-Dichlorobenzene	1.25	2.50	5.00	ug/Kg
2,2-Dichloropropane	1.25	2.50	5.00	ug/Kg
2-Butanone (Methyl ethyl ketone; MEK)	2.50	5.00	10.0	ug/Kg
2-Chlorotoluene	1.25	2.50	5.00	ug/Kg
2-Hexanone (Methyl butyl ketone; MBK)	1.25	2.50	5.00	ug/Kg
4-Chlorotoluene	1.25	2.50	5.00	ug/Kg
4-Methyl-2-pentanone (Methyl isobutyl ketone; MIBK)	1.25	2.50	5.00	ug/Kg
Acetone	5.00	10.0	20.0	ug/Kg
Acrolein	5.00	10.0	20.0	ug/Kg
Acrylonitrile	5.00	10.0	20.0	ug/Kg
Benzene	1.25	2.50	5.00	ug/Kg
Bromobenzene	1.25	2.50	5.00	ug/Kg
Bromochloromethane	1.25	2.50	5.00	ug/Kg
Bromodichloromethane	1.25	2.50	5.00	ug/Kg
Bromoform	1.25	2.50	5.00	ug/Kg
Bromomethane	2.50	5.00	10.0	ug/Kg
Carbon Disulfide	1.25	2.50	5.00	ug/Kg
Carbon Tetrachloride	1.25	2.50	5.00	ug/Kg
Chlorobenzene	1.25	2.50	5.00	ug/Kg
Chloroethane	2.50	5.00	10.0	ug/Kg
Chloroform	1.25	2.50	5.00	ug/Kg
Chloromethane	2.50	5.00	10.0	ug/Kg
cis-1,2-Dichloroethene (cis-1,2-DCE)	1.25	2.50	5.00	ug/Kg
cis-1,3-Dichloropropene	1.25	2.50	5.00	ug/Kg
Cyclohexane	1.25	2.50	5.00	ug/Kg
Dibromochloromethane	1.25	2.50	5.00	ug/Kg

Analyte	MDL/DL	LOD	MRL/LOQ	Units
Dibromomethane	1.25	2.50	5.00	ug/Kg
Dichlorodifluoromethane (CFC-12)	2.50	5.00	10.0	ug/Kg
Ethyl methacrylate	1.25	2.50	5.00	ug/Kg
Ethylbenzene	1.25	2.50	5.00	ug/Kg
Hexachlorobutadiene	1.25	2.50	5.00	ug/Kg
Iodomethane	5.00	10.0	20.0	ug/Kg
Isopropylbenzene (Cumene)	1.25	2.50	5.00	ug/Kg
Methyl Acetate	2.50	5.00	10.0	ug/Kg
Methyl methacrylate	1.25	2.50	5.00	ug/Kg
Methyl Tertiary Butyl Ether (MTBE)	1.25	2.50	5.00	ug/Kg
Methylcyclohexane	1.25	2.50	5.00	ug/Kg
Methylene Chloride, or Dichloromethane	2.50	5.00	10.0	ug/Kg
Naphthalene	1.25	2.50	5.00	ug/Kg
n-Butylbenzene	1.25	2.50	5.00	ug/Kg
n-Propylbenzene	1.25	2.50	5.00	ug/Kg
p-Isopropyltoluene	1.25	2.50	5.00	ug/Kg
sec-Butylbenzene	1.25	2.50	5.00	ug/Kg
Styrene	1.25	2.50	5.00	ug/Kg
tert-Butylbenzene	1.25	2.50	5.00	ug/Kg
Tetrachloroethene (PCE; PERC)	1.25	2.50	5.00	ug/Kg
Toluene	1.25	2.50	5.00	ug/Kg
trans-1,2-Dichloroethene (trans-1,2-DCE)	1.25	2.50	5.00	ug/Kg
trans-1,3-Dichloropropene	1.25	2.50	5.00	ug/Kg
Trichloroethene (TCE)	1.25	2.50	5.00	ug/Kg
Trichlorofluoromethane (CFC-11)	2.50	5.00	10.0	ug/Kg
Vinyl acetate	2.50	5.00	10.0	ug/Kg
Vinyl Chloride (VC)	2.50	5.00	10.0	ug/Kg
m,p-Xylene	2.50	5.00	10.0	ug/Kg
o-Xylene	1.25	2.50	5.00	ug/Kg
1,1,1,2-Tetrachloroethane	0.25	0.50	1.00	ug/L
1,1,1-Trichloroethane (1,1,1-TCA)	0.25	0.50	1.00	ug/L
1,1,2,2-Tetrachloroethane	0.25	0.50	1.00	ug/L
1,1,2-Trichloro-1,2,2-trifluoroethane (CFC-113; Freon 113)	0.50	1.00	2.00	ug/L
1,1,2-Trichloroethane	0.25	0.50	1.00	ug/L
1,1-Dichloroethane (1,1-DCA)	0.25	0.50	1.00	ug/L
1,1-Dichloroethene (1,1-DCE)	0.25	0.50	1.00	ug/L
1,1-Dichloropropene	0.25	0.50	1.00	ug/L
1,2,3-Trichlorobenzene	0.25	0.50	1.00	ug/L
1,2,3-Trichloropropane	0.50	1.00	2.00	ug/L
1,2,4-Trichlorobenzene	0.25	0.50	1.00	ug/L
1,2,4-Trimethylbenzene	0.25	0.50	1.00	ug/L
1,2-Dibromo-3-chloropropane (DBCP)	0.50	1.00	2.00	ug/L
1,2-Dibromoethane (EDB)	0.25	0.50	1.00	ug/L
1,2-Dichlorobenzene	0.25	0.50	1.00	ug/L
1,2-Dichloroethane (EDC)	0.25	0.50	1.00	ug/L
1,2-Dichloropropane	0.25	0.50	1.00	ug/L
1,3,5-Trimethylbenzene	0.25	0.50	1.00	ug/L
1,3-Dichlorobenzene	0.25	0.50	1.00	ug/L
1,3-Dichloropropane	0.25	0.50	1.00	ug/L

Analyte	MDL/DL	LOD	MRL/LOQ	Units
1,4-Dichlorobenzene	0.25	0.50	1.00	ug/L
1-Chlorohexane	0.50	1.00	2.00	ug/L
2,2-Dichloropropane	0.25	0.50	1.00	ug/L
2-Butanone (Methyl ethyl ketone; MEK)	2.50	5.00	10.0	ug/L
2-Chloroethyl vinyl ether	1.25	2.50	5.00	ug/L
2-Chlorotoluene	0.25	0.50	1.00	ug/L
2-Hexanone (Methyl butyl ketone; MBK)	1.25	2.50	5.00	ug/L
4-Chlorotoluene	0.25	0.50	1.00	ug/L
4-Methyl-2-pentanone (Methyl isobutyl ketone; MIBK)	1.25	2.50	5.00	ug/L
Acetone	2.50	5.00	10.0	ug/L
Acrolein	1.25	2.50	5.00	ug/L
Acrylonitrile	2.50	5.00	10.0	ug/L
Benzene	0.25	0.50	1.00	ug/L
Bromobenzene	0.25	0.50	1.00	ug/L
Bromochloromethane	0.25	0.50	1.00	ug/L
Bromodichloromethane	0.25	0.50	1.00	ug/L
Bromoform	0.25	0.50	1.00	ug/L
Bromomethane	0.50	1.00	2.00	ug/L
Carbon Disulfide	0.25	0.50	1.00	ug/L
Carbon Tetrachloride	0.25	0.50	1.00	ug/L
Chlorobenzene	0.25	0.50	1.00	ug/L
Chloroethane	0.50	1.00	2.00	ug/L
Chloroform	0.25	0.50	1.00	ug/L
Chloromethane	0.25	0.50	1.00	ug/L
cis-1,2-Dichloroethene (cis-1,2-DCE)	0.25	0.50	1.00	ug/L
cis-1,3-Dichloropropene	0.25	0.50	1.00	ug/L
Cyclohexane	0.25	0.50	1.00	ug/L
Dibromochloromethane	0.25	0.50	1.00	ug/L
Dibromomethane	0.25	0.50	1.00	ug/L
Dichlorodifluoromethane (CFC-12)	0.50	1.00	2.00	ug/L
Di-isopropyl ether	0.25	0.50	1.00	ug/L
ETBE	0.25	0.50	1.00	ug/L
Ethyl methacrylate	0.25	0.50	1.00	ug/L
Ethylbenzene	0.25	0.50	1.00	ug/L
Hexachlorobutadiene	0.25	0.50	1.00	ug/L
Iodomethane	0.25	0.50	1.00	ug/L
Isopropylbenzene (Cumene)	0.25	0.50	1.00	ug/L
Methyl Acetate	0.50	1.00	2.00	ug/L
Methyl methacrylate	0.25	0.50	1.00	ug/L
Methyl Tertiary Butyl Ether (MTBE)	0.25	0.50	1.00	ug/L
Methylcyclohexane	0.25	0.50	1.00	ug/L
Methylene Chloride, or Dichloromethane	0.50	1.00	2.00	ug/L
Naphthalene	0.25	0.50	1.00	ug/L
n-Butylbenzene	0.25	0.50	1.00	ug/L
n-Propylbenzene	0.25	0.50	1.00	ug/L
p-Isopropyltoluene	0.25	0.50	1.00	ug/L
sec-Butylbenzene	0.25	0.50	1.00	ug/L
Styrene	0.25	0.50	1.00	ug/L
t-Butyl alcohol	1.25	2.50	5.00	ug/L

Analyte	MDL/DL	LOD	MRL/LOQ	Units
tert-Amyl methyl ether	2.50	5.00	10.0	ug/L
tert-Butylbenzene	0.25	0.50	1.00	ug/L
Tetrachloroethene (PCE; PERC)	0.25	0.50	1.00	ug/L
Tetrahydrofuran	1.25	2.50	5.00	ug/L
Toluene	0.25	0.50	1.00	ug/L
trans-1,2-Dichloroethene (trans-1,2-DCE)	0.25	0.50	1.00	ug/L
trans-1,3-Dichloropropene	0.25	0.50	1.00	ug/L
Trichloroethene (TCE)	0.25	0.50	1.00	ug/L
Trichlorofluoromethane (CFC-11)	0.50	1.00	2.00	ug/L
Vinyl acetate	1.25	2.50	5.00	ug/L
Vinyl Chloride (VC)	0.50	1.00	2.00	ug/L
m,p-Xylene	0.50	1.00	2.00	ug/L
o-Xylene	0.25	0.50	1.00	ug/L

Table 2. Organic Analysis by Gas Chromatography/Mass Spectrometry (Method 8260B)					
QC Check	Minimum Frequency	Acceptance Criteria	Corrective Action	Flagging Criteria	Comments
Demonstrate acceptable analytical capability	Prior to using any test method and at any time there is a significant change in instrument type, personnel, test method, or sample matrix.	QC acceptance criteria published by DoD, if available; otherwise, method-specific criteria.	Recalculate results; locate and fix problem, then rerun demonstration for those analytes that did not meet criteria (see Section C.1.f of DoD QSM 4.1).	NA.	This is a demonstration of analytical ability to generate acceptable precision and bias per the procedure in Appendix C. No analysis shall be allowed by analyst until successful demonstration of capability is complete.
MDL determination	Initial method demonstration required for some states – not required for DoD	Refer to SOP QS09.			
LOD determination and verification	Prior to initial analysis then quarterly verification.	See Box D-13 of DoD QSM 4.1			
LOQ establishment and verification	Prior to initial analysis then quarterly verification.	See Box D-14 of DoD QSM 4.1			
Tuning	Prior to ICAL and at the beginning of each 12-hour period.	Refer to table 5 of this SOP.	Retune instrument and verify. Rerun affected samples.	Flagging criteria are not appropriate.	Problem must be corrected. No samples may be accepted without a valid tune.
Minimum five-point initial calibration (ICAL) for all analytes	ICAL prior to sample analysis.	1. Average response factor (RF) for SPCCs: VOCs ≥ 0.30 for chlorobenzene and 1,1,2,2-tetrachlorolethane; ≥ 0.1 for chloromethane, bromoform, and 1,1-dichloroethane. 2. RSD for RFs for CCCs: VOCs ≤ 30% and one option below: **Option 1:** RSD for each analyte ≤ 15%; **Option 2:** linear least squares regression r ≥ 0.995; **Option 3**: non-linear regression–coefficient of determination (COD) r2 ≥ 0.99 (6 points shall be used for second order, 7 points shall be used for third order).	Correct problem then repeat ICAL.	Flagging criteria are not appropriate.	Problem must be corrected. No samples may be run until ICAL has passed. Calibration may not be forced through the origin for DoD projects.

Table 2. Organic Analysis by Gas Chromatography/Mass Spectrometry (Methods 8260B) (continued)					
QC Check	Minimum Frequency	Acceptance Criteria	Corrective Action	Flagging Criteria	Comments
Second source calibration verification (ICV)	Once after each ICAL.	All project analytes within ± 20% of true value. [± 25% for non-DoD 8260B;]	Correct problem and verify second source standard. Rerun second source verification. If that fails, correct problem and repeat ICAL.	Flagging criteria are not appropriate.	Problem must be corrected. No samples may be run until calibration has been verified.
Retention time window position establishment for each analyte and surrogate	Once per ICAL.	Position shall be set using the midpoint standard of the ICAL curve when ICAL is performed. On days when ICAL is not performed, the sequence CCV is used.	NA.	NA.	
Evaluation of relative retention times (RRT)	With each sample.	RRT of each target analyte within ± 0.06 RRT units. Note - retention times may be updated based on the CCV to account for minor performance fluctuations or after routine system maintenance (such as column clipping).	Correct problem, then rerun ICAL.	Flagging criteria are not appropriate.	With each sample, the RRT shall be compared with the most recently updated RRT. If the RRT has changed by more than ±0.06 RRT units since the last update, this indicates a significant change in system performance and the laboratory must take appropriate corrective actions as required by the method and rerun the ICAL to reestablish the retention times.
Continuing calibration verification (CCV)	Daily before sample analysis and every 12 hours of analysis time.	1. Average RF for SPCCs: VOCs ≥ 0.30 for chlorobenzene and 1,1,2,2-tetrachlorolethane; ≥ 0.1 for chloromethane, bromoform, and 1,1-dichloroethane. 2. %Difference/Drift for all target compounds and surrogates: VOCs ≤ 20%D (Note: D = difference when using RFs or drift when using least squares regression or non-linear calibration). [± 20% for CCCs only non-DoD 8260B]	DoD project level approval must be obtained for each of the failed analytes or corrective action must be taken. Correct problem, then rerun calibration verification. If that fails, then repeat ICAL. Reanalyze all samples since last acceptable CCV.	If reanalysis cannot be performed, data must be qualified and explained in the case narrative. Apply qualifier to all results for the specific analyte(s) in all samples since last acceptable CCV. [For non-DoD 8260B, if CCCs exceed, evaluate all analytes for 20%D and qualify as above]	Problem must be corrected. Results may not be reported without a valid CCV. Flagging is only appropriate in cases where the samples cannot be reanalyzed, holding time has been exceeded or client has approved reporting.

Table 2. Organic Analysis by Gas Chromatography/Mass Spectrometry (Methods 8260B) (continued)					
QC Check	Minimum Frequency	Acceptance Criteria	Corrective Action	Flagging Criteria	Comments
Internal standards verification	Every field sample, standard, and QC sample.	Retention time ± 30 seconds from retention time of the midpoint standard in the ICAL or daily CCV; EICP area within -50% to +100% of ICAL midpoint standard or daily CCV.	Inspect mass spectrometer and GC for malfunctions. Reanalysis of samples analyzed while system was malfunctioning is mandatory.	If corrective action fails in field samples, apply qulaifier to analytes associated with the non-compliant IS. Flagging criteria are not appropriate for failed standards.	Sample results are not acceptable without a valid IS verification.
Method blank	One per preparatory batch.	No analytes detected > ½ RL and > 1/10 the amount measured in any sample or 1/10 the regulatory limit (whichever is greater). Blank result must not otherwise affect sample results. For common laboratory contaminants, no analytes detected >RL/LOQ	Correct problem. If required, reprep and reanalyze method blank and all samples processed with the contaminated blank.	If reanalysis cannot be performed, data must be qualified and explained in the case narrative. Apply B-flag to all results for the specific analyte(s) in all samples in the associated preparatory batch.	Problem must be corrected. Results may not be reported without a valid method blank. Flagging is only appropriate in cases where the samples cannot be reanalyzed.
LCS containing all analytes to be reported, including surrogates	One per preparatory batch.	QC acceptance criteria specified by client or DoD (appendix G), if available. Otherwise, use in-house control limits. In-house control limits may not be greater than ± 3 times the standard deviation of the mean LCS recovery.	Correct problem, then reprep and reanalyze the LCS and all samples in the associated preparatory batch for failed analytes, if sufficient sample material is available.	If reanalysis cannot be performed, data must be qualified and explained in the case narrative. Apply Q-flag to specific analyte(s) in all samples in the associated preparatory batch.	Problem must be corrected. Results may not be reported without a valid LCS. Flagging is only appropriate in cases where the samples cannot be reanalyzed.
Matrix Spike (MS)	One per preparatory batch per matrix (see Box D-7).	Use LCS criteria, above.	Examine the project-specific DQOs. Contact the client as to additional measures to be taken.	For the specific analyte(s) in the parent sample, apply qualifier if acceptance criteria are not met.	For matrix evaluation only. If MS results are outside the LCS limits, the data shall be evaluated to determine the source of difference and to determine if there is a matrix effect or analytical error.
Matrix spike duplicate (MSD) or sample duplicate	One per preparatory batch per matrix (see Box D-7).	MSD: For matrix evaluation, use LCS acceptance criteria above. MSD or sample duplicate: RPD ≤ 30% or client specified limit (between MS and MSD or sample and sample duplicate).	Examine the project-specific DQOs. Contact the client as to additional measures to be taken.	For the specific analyte(s) in the parent sample, apply qualifier if acceptance criteria are not met.	The data shall be evaluated to determine the source of difference.

Table 2. Organic Analysis by Gas Chromatography/Mass Spectrometry (Methods 8260B) (continued)

QC Check	Minimum Frequency	Acceptance Criteria	Corrective Action	Flagging Criteria	Comments
Surrogate spike	All field and QC samples.	**Surrogate** / **WATER** / **SOIL** Dibromofluoromethane / 85-120 / 80-125 1,2-Dichloroethane-d4 / 85-135 / 75-140 Toluene-d8 / 85-115 / 80-120 Bromofluorobenzene / 80-120 / 80-125 QC acceptance criteria specified by DoD (above) or Client. Otherwise, in-house control limits may be used. No limits specified for Method 624.	For QC and field samples, correct problem then reprep and reanalyze all failed samples for failed surrogates in the associated preparatory batch, if sufficient sample material is available. If obvious chromatographic interference with surrogate is present, reanalysis may not be necessary.	Apply qualifier to all associated analytes if acceptance criteria are not met.	Alternative surrogates are recommended when there is obvious chromatographic interference.
Results reported between DL and LOQ	NA.	NA.	NA.	Apply J-flag to all results between DL and LOQ.	

Table 3, Technical Completeness / Accuracy Checklist

1. Were all the QC check elements analyzed – refer to Table 2 of the SOP
2. Were the QC criteria met
3. In cases of failures, was there an NCR written
4. Were all manual integrations signed
5. Were dilution factors applied correctly
6. Was there supervisory approval for manual integrations on standards and QC samples
7. Was the data uploaded into LIMS via direct upload – if yes, then was a cross check subset of the uploaded values performed
8. If the data was entered into LIMS manually, was a check of all entered values performed
9. Was the red marked data in LIMS checked for accuracy and the corresponding hard copy data documented appropriately
10. Were proper data qualifiers applied to the data in LIMS
11. Was the hard copy package checked for completeness to include all data for the sequence such that the data reviewer could reconstruct sample analyses and validate / approve the data

Table 4, Data Reviewers Checklist (Prior to approving data)

1. Does the hard copy raw data (or electronic raw data) package look complete and include all data points
2. Were QA objectives met and for failures were the appropriate actions taken
3. For direct uploads to LIMS, did a subset cross check match the raw data
4. Did all the manual entries into LIMS match the raw data
5. Were there appropriate signatures and documentation on the raw data
6. Were appropriate LIMS flags used
7. Were manual integrations signed
8. Were manual integrations for calibration and QC samples approved by supervisor
9. Were manual calculations verified

Table 5, Tuning Criteria

m/z	Required Intensity (relative abundance)
50	15 to 40% of m/z 95
75	30 to 60% of m/z 95
95	Base peak, 100% relative abundance
96	5 to 9% of m/z 95
173	Less than 2% of m/z 174
174	Greater than 50% of m/z 95
175	5 to 9% of m/z 174
176	Greater than 95% but less than 101% of m/z 174
177	5 to 9% of m/z 176

Table 6, ANALYST DATA REVIEW CHECKLIST

Sample Number(s):
Batch Number(s):
Method: 8260B/624/8270C/8270D/625 (Circle One)

QA/QC Item	Yes	No	NA	Second Review	Level
1. Is the BFB/DFTPP tune performed every 12 hours and is the tuning criteria met?					
Are the RRFs and % RSDs within QC limits for appropriate analytes for the initial calibration? Check the retention times for compounds with the same spectra. Check compounds with different conc.(e.g. m/p-xylene, ketones, etc.).					
3. Was the initial calibration curve verified by a second source calibration standard (ICV) and have criteria been met?					
4. Does the Continuing Calibration Standard (CCV) meet the criteria for the CCCs, SPCCs and/or 20%D for all analytes.					
5. Is the Method Blank run at the desired frequency and is its concentration for target analytes less than the MDLs?					
6. Are the LCS, MS, MSD within control limits and run at the desired frequency?					
7. Are all sample holding times met, analytes within calibration range, IS areas and surrogate recoveries within QC limits?					
8. Were the Method Blank, LCS, MS, MSD and samples uploaded to the LIMS and verified (at least one calculation per batch uploaded)?					

Comments on any "No" response:

_____

_____

_____

_____

Primary-Level Review: _____ Date: _____

Second-Level Review: _____ Date: _____

Table 7, Internal Standard Association

Analyte	Internal Standard	Analyte	Internal Standard
1,1,1-Trichloroethane	Fluorobenzene	1,1,1,2-Tetrachloroethane	d5-Chlorobenzene
1,1,2-Trichloro-1,2,2-trifluoroethane	Fluorobenzene	1,1,2-Trichloroethane	d5-Chlorobenzene
1,1-Dichloroethane	Fluorobenzene	1,2,3-Trichloropropane	d5-Chlorobenzene
1,1-Dichloroethene	Fluorobenzene	1,2-Dibromoethane (EDB)	d5-Chlorobenzene
1,1-Dichloropropene	Fluorobenzene	1,3-Dichloropropane	d5-Chlorobenzene
1,2-Dichloroethane	Fluorobenzene	1-Chlorohexane	d5-Chlorobenzene
1,2-Dichloroethane-d4	Fluorobenzene	2-Hexanone	d5-Chlorobenzene
1,2-Dichloroethene (total)	Fluorobenzene	Bromofluorobenzene	d5-Chlorobenzene
1,2-Dichloropropane	Fluorobenzene	Bromoform	d5-Chlorobenzene
1,4-Dioxane	Fluorobenzene	Chlorobenzene	d5-Chlorobenzene
2,2-Dichloropropane	Fluorobenzene	Chlorobenzene-d5	d5-Chlorobenzene
2-Butanone	Fluorobenzene	Dibromochloromethane	d5-Chlorobenzene
2-Chloroethyl vinyl ether	Fluorobenzene	Ethyl Methacrylate	d5-Chlorobenzene
4-Methyl-2-pentanone	Fluorobenzene	Ethylbenzene	d5-Chlorobenzene
Acetaldehyde	Fluorobenzene	m,p-Xylene	d5-Chlorobenzene
Acetone	Fluorobenzene	Methacrylonitrile	d5-Chlorobenzene
Acetonitrile	Fluorobenzene	o-Xylene	d5-Chlorobenzene
Acrolein	Fluorobenzene	Styrene	d5-Chlorobenzene
Acrylonitrile	Fluorobenzene	Tetrachloroethene	d5-Chlorobenzene
Allyl chloride	Fluorobenzene	Toluene	d5-Chlorobenzene
Benzene	Fluorobenzene	Toluene-d8	d5-Chlorobenzene
Bromochloromethane	Fluorobenzene	trans-1,3-Dichloropropene	d5-Chlorobenzene
Bromodichloromethane	Fluorobenzene	Xylenes (total)	d5-Chlorobenzene
Bromomethane	Fluorobenzene	1,1,2,2-Tetrachloroethane	1,4-dichlorobenzene-d4
Carbon disulfide	Fluorobenzene	1,2,3-Trichlorobenzene	1,4-dichlorobenzene-d4
Carbon tetrachloride	Fluorobenzene	1,2,4-Trichlorobenzene	1,4-dichlorobenzene-d4
Chloroethane	Fluorobenzene	1,2,4-Trimethylbenzene	1,4-dichlorobenzene-d4
Chloroform	Fluorobenzene	1,2-Dibromo-3-chloropropane	1,4-dichlorobenzene-d4
Chloromethane	Fluorobenzene	1,2-Dichlorobenzene	1,4-dichlorobenzene-d4
Chloroprene	Fluorobenzene	1,3,5-Trimethylbenzene	1,4-dichlorobenzene-d4
cis-1,2-Dichloroethene	Fluorobenzene	1,3-Dichlorobenzene	1,4-dichlorobenzene-d4
cis-1,3-Dichloropropene	Fluorobenzene	1,4-Dichlorobenzene	1,4-dichlorobenzene-d4
Cyclohexane	Fluorobenzene	1,4-Dichlorobenzene-d4	1,4-dichlorobenzene-d4
Dibromofluoromethane	Fluorobenzene	2-Chlorotoluene	1,4-dichlorobenzene-d4
Dibromomethane	Fluorobenzene	4-Chlorotoluene	1,4-dichlorobenzene-d4
Dichlorodifluoromethane	Fluorobenzene	Bromobenzene	1,4-dichlorobenzene-d4
Diisopropyl Ether	Fluorobenzene	cis-1,4-Dichloro-2-butene	1,4-dichlorobenzene-d4
Ethyl tert-Butyl Ether	Fluorobenzene	Hexachlorobutadiene	1,4-dichlorobenzene-d4
Fluorobenzene	Fluorobenzene	Naphthalene	1,4-dichlorobenzene-d4
Hexane	Fluorobenzene	n-Butylbenzene	1,4-dichlorobenzene-d4
Iodomethane	Fluorobenzene	n-Propylbenzene	1,4-dichlorobenzene-d4
Isobutyl alcohol	Fluorobenzene	p-Isopropyltoluene	1,4-dichlorobenzene-d4
Isopropylbenzene	Fluorobenzene	sec-Butylbenzene	1,4-dichlorobenzene-d4
Methyl Acetate	Fluorobenzene	tert-Butylbenzene	1,4-dichlorobenzene-d4
Methyl Methacrylate	Fluorobenzene	trans-1,4-Dichloro-2-butene	1,4-dichlorobenzene-d4
Methyl t-Butyl Ether	Fluorobenzene		
Methylcyclohexane	Fluorobenzene		
Methylene chloride	Fluorobenzene		
Propionitrile	Fluorobenzene		
t-Butyl alcohol	Fluorobenzene		
Tert-Amyl Methyl Ether	Fluorobenzene		
Tetrahydrofuran	Fluorobenzene		
trans-1,2-Dichloroethene	Fluorobenzene		
Trichloroethene	Fluorobenzene		
Trichlorofluoromethane	Fluorobenzene		
Vinyl acetate	Fluorobenzene		
Vinyl chloride	Fluorobenzene		

EMPIRICAL LABORATORIES, LLC
STANDARD OPERATING PROCEDURE

ORGANICS: SOP 300 **REVISION #: 18** **EFFECTIVE DATE: 042610**

GC/MS SEMI-VOLATILE BNA-AQUEOUS MATRIX EXTRACTION USING SW-846 METHOD 3510C FOR 8270/625 ANALYSIS

APPROVALS:

Lab Director: _____ Date: 4/27/10

Data Quality Manager: _____ Date: 4/27/10

Section Supervisor: _____ Date: 4/27/10

Changes Summary

Revision Date: 042610

- The SOP is formatted to include all 22-elements required per the NELAC standards
- The laboratory's revision of all technical SOPs now includes a Table of Contents that provides the map of the technical information contained within the SOP.
- Additional requirements, based upon the DoD QSM 4.1, have been integrated into the routine sample flow; however, if the requirement is different from routine sample flow, then the requirement is outlined and documented as such to be followed only when DoD samples are analyzed.

Table of Contents

1. Identification of the Test Method
2. Applicable Matrix or Matrices
3. Detection Limit
4. Scope of Application, Including components to be Analyzed
5. Summary of the Test Method
6. Definitions
7. Interferences
8. Safety
9. Equipment & Supplies
10. Reagents and Standards
11. Sample Collection, Preservation, Shipment, and Storage
12. Quality Control
13. Calibration and Standardization
14. Procedure
15. Data Analysis and Calculations
16. Method Performance
17. Pollution Prevention
18. Data Assessment and Acceptance Criteria for Quality Control Measures
19. Contingencies for Handling out-of-control or unacceptable data
20. Waste Management
21. References
22. Tables, Diagrams, Flowcharts and Validation Data

1.0 Identification of the Test Method

1.1 This SOP is compliant with SW-846 Method 3510C and Method 625.

2.0 Applicable Matrix or Matrices

2.1 This SOP is applicable to aqueous samples.

3.0 Detection Limit

Not Applicable to this SOP

4.0 Scope of Application, including components to be analyzed

Not Applicable to this SOP

5.0 Summary of the Test Method

5.1 Aqueous samples are extracted with methylene chloride. The extracts are dried through sodium sulfate and concentrated to an appropriate final volume.

6.0 Definitions

6.1 Laboratory Quality System SOP QS08 "Technical/Operational Definitions, Minimum Essential Quality Control Elements, and Laboratory Calibration Procedures" provides information on the commonly used definitions.

7.0 Interferences

7.1 Solvents, reagents, glassware, and other sample processing apparatus can add interferences to sample analysis. Method blanks must be extracted under the same conditions as samples to demonstrate freedom from interferences.

7.2 Phthalate esters commonly found in plastics can interfere with the analysis. Plastics should be avoided.

7.3 Soap residue can degrade certain analytes such as aldrin and heptachlor. Glassware should be solvent rinsed to avoid this problem.

8.0 Safety

8.1 Laboratory SOP QS13 "Safety Program & Chemical Hygiene Plan" discusses the safety program that is to be followed labwide.

9.0 Equipment and Supplies

9.1 Separatory Funnel – 2L with Teflon stopcock

9.2 Beaker – 250mL or 400mL

9.3 Drying/Chromatographic column – 20mm I.D. x 300mm

9.4 Filter funnel

9.5 Turbo-Vap evaporation tube – 200mL tube made by Zymark or equivalent

9.6 Metal rack – capable of holding six glass evaporation tubes

9.7 Turbo-Vap Evaporator – heated and capable of temperature control (+5˚C); the bath should be vented into a hood
9.8 Vials, 2.0 mL glass with Teflon-lined screw cap
9.9 pH indicator paper – wide range (1.0-12.0)
9.10 Syringe – 1mL
9.11 Graduated cylinder – 1000mL, 500mL, and 100mL, glass, Class A
9.12 Pasteur pipette – length 9”
9.13 Pasteur pipette bulb
9.14 Labels – DYMO
9.15 Teflon Bottles – 500mL
9.16 Volumetric Flasks – 500mL, 100mL, 50mL, and 10mL, glass, Class A
9.17 Ring Stand – 3-prong
9.18 Burette clamp – double
9.19 Aluminum foil – heavy duty
9.20 Nitrogen tank – equipped with pressure regulator
9.21 Boiling chips – Teflon
9.22 Glass Wool – Roving, 9989 purchased from Fisher #11-388 or equivalent

10.0 Reagents and Standards

10.1 Reagent Water - Reagent water is gathered in a carboy from source in the instrument lab as needed.
10.2 Sodium Hydroxide Solution - (10N). Weigh 800g NaOH (purchased in a fiber drum from Tennessee Reagents # 2-31825-25lb or equivalent) into a 2000mL volumetric flask and add approximately 1000mL of reagent water. Swirl until pellets are mostly dissolved. Add a stir bar and place on stir plate. This mixture will get very hot. Continue to add reagent water while mixture is being stirred until a final volume of 2000mL is attained. Let stand until cool. Transfer to 1000mL Teflon containers.
10.3 Sodium Sulfate – Granular, anhydrous, trace pure 10-60 mesh (purchased in 200lb bulk fiber drum from Fisher #S415-200lb or equivalent). For low level tests, place an aliquot in a 1500mL heavy duty Pyrex beaker and bake in muffle furnace at 400°C for a minimum of 4 hours. Remove and cool in open air and place in designated “Baked Sodium Sulfate” container at room temperature
10.4 Glass Wool – Roving , 9989 Glass (purchased from Fisher #11-388 or equivalent).
10.5 Sulfuric Acid Solution - (1:1), slowly add 500mL of H2SO4 (Fisher, suitable for trace metal analysis #A300C-212 or equivalent) to 500mL of reagent water in a 1000mL Teflon container. This mixture will get very warm. Allow to cool before use.
10.6 Extraction Solvent - Methylene Chloride (purchased from Fisher #D151-4 or equivalent) Please read SOP-336 before handling this solvent in our laboratory.
10.7 The extraction analyst makes up surrogates and spikes. Verify the amount of surrogate/spike to add to the sample prior to addition. It can change if a different detection limit is required or the volume of sample being analyzed changes.
10.7.1 BNA Surrogate – The base neutral and acid surrogate are mixed together in one solution (purchased from NSI #WL-371-C at concentrations of 100-200ug/mL). The expiration for this standard is 6 months from the date opened. Use 0.5mL of this solution per 1000mL of aqueous sample.

10.7.2 BNA Spiking Solution – The base neutral and acid spiking solutions are mixed together in one solution called BNA LCS#1 (This spiking solution contains all the compounds that are normally calibrated by GC/MS). This solution, with a final concentration of 100ug/mL, is prepared in Methanol by making a dilution of stock purchased from reputable vendors (BNA LCS #1 spike kit #K-943 and 1-methylnapthalene #1288-01-08 are purchased from NSI, 2,6 Dichlorophenol #95591 is purchased from Absolute Standards and 1,4 Dioxane #30287 is purchased from Restek). Use 0.5mL of this solution per 1000mL of aqueous sample. Another spiking solution is also used, called BNA LCS#2. This solution contains short or matrix spike list base extractable compounds. This solution, with a final concentration of 100ug/mL,is prepared in Methanol by making a dilution of stock purchased from NSI #Q-6104-0. Use 0.5mL of this solution in combination with BNA LCS#1 for all full list BNA requirements. BNA LCS #2 may be omitted from samples requiring PAH analysis. (For low level PAHs, use 1.0mL of a 1.0ug/mL solution made from BNA LCS #1, called "LLPAH spiking solution.) All standards expire 6 months from the date they are made.

10.7.3 BNA TCLP Spike – 0.5mL of BNA LCS#1 and BNA LCS#2 is added per 100mL volume. This volume is provided by Wet Chemistry in a 1L glass amber bottle. 100mL is removed from this container and measured using a graduated cylinder.

11.0 Sample Collection, Preservation, Shipment, and Storage

11.1 Quality Systems SOP QS10 related to Sample Receipt, Handling, & Processing provides details for collection, preservation, shipment, and storage.

11.2 Aqueous samples have a hold time of 7 days from the date of sampling.

12.0 Quality Control

12.1 Quality Systems SOP QS08 "Technical/ Operational Definitions, Minimum Essential Quality Control Elements, and Laboratory Calibration Procedures" outlines details related to laboratory wide protocols on quality control.

13.0 Calibration and Standardization

Not Applicable to this SOP

14.0 Procedure

14.1 All waters have a seven-day holding time counted from the day they are sampled. Determine the samples necessary to extract from the following sources (Note: never extract samples of unknown origin without discussion with supervisor):

14.1.1 Each day the extractions group leader will generate a sample backlog using LIMS.

14.1.2 This backlog is used to determine extraction priorities based on hold times and due dates.

14.1.3 Samples requiring RUSH turn around time may be logged in throughout the day, which will require immediate attention. Sample receiving personnel will generally communicate this need.

14.1.4 Samples are placed in LIMS “batches” based on parameter and extracted accordingly.

14.2 Wearing lab coat, gloves and safety glasses, get samples from refrigerator. Samples must be signed out of the walk-in refrigerator. Enter the sample numbers, your initials and the date and time removed on the log provided. Inspect as to whether they are in glass amber jar and have a Teflon lid. Find out if any special dilutions need to be made for this client. Routine procedures for difficult matrices are listed below:

14.2.1 SLUDGE - use only 100mL and dilute to 1000mL with reagent water.

14.2.2 TCLP EXTRACT - use only 100mL and dilute to 1000mL with reagent water. A separate matrix spike of 100mLs should be set up at the same time. Dilute to 1000mL with reagent water.

14.2.3 1BAD MATRIX – for example a liquid that is partially sediment, see your supervisor to find out what dilution, if any should be made. SPLP extract-use 1 liter.

14.2.4 NPDES client - a special list of compounds is required including benzidine. Method 625 requires that there be a spike every ten samples. The sample must be extracted and concentrated in the same day. A GC/MS screen is recommended; therefore this extraction should be coordinated with the GC/MS operator. 1mL is added to the LCS and the matrix spike.

14.2.5 ACID EXTRACT WITH BAD MATRIX - a cleanup step is added. Samples are taken to a high pH, extracted with 60mL methylene chloride one time as explained below in the BASE NEUTRAL EXTRACTION section. This extract is discarded. The samples are then taken to a low pH and extracted as an acid extraction. Acid extractions may be concentrated in the TurboVap.

14.3 LOW LEVEL POLYAROMATIC HYDROCARBONS (PAHs) – Samples require a BNA extraction. Use the surrogate and spiking solution specified.

14.4 Mark the amber glass container of each sample at the water meniscus with "white out" for later determination of sample volume. Check the pH by inverting the sample and touching the wide range pH paper to the portion that remains on the lid. Record this pH on the LIMS bench sheet and, later, in LIMS.

14.5 Get out enough separatory funnels to extract the number of samples you have plus any additional spikes and a method blank. A method blank and an LCS must be processed with each set of samples. If the sample is a TCLP, blank fluid may be provided along with the extracted TCLP sample(s). Use only 100mL and dilute to 1000mL with reagent water. Process a matrix spike and matrix spike duplicate on aqueous samples if requested by client. If not, a LCSD must be processed. Rinse separatory funnels with methanol. Place label from sample bottle onto separatory funnel as samples are poured into funnels to ensure proper identification. Use Avery labels to properly identify method blank, LCS, and LCSD.

14.6 Using the 1000mL glass graduated cylinder marked NANO PURE WATER ONLY, measure 1000mL of reagent water from the carboy and transfer it to a separatory funnel for the method blank and LCS. Transfer sample to separatory funnel that corresponds to the lab # on the sample bottle.

14.7 Verify the amount of surrogate/spike to add to the sample prior to addition. It can change if a different detection limit is required or the volume of sample being analyzed changes. Set out the surrogate/spike at least ten minutes before use to allow it to warm to room temperature.

14.8 Generally 0.5mL of BNA surrogate is added to each sample, spike, and blank with a syringe designated for BNA surrogate**.** Someone must verify that the surrogate has been added by initialing LIMS bench sheet.

14.8.1 NOTE: Be sure to invert syringe and eliminate air bubble when obtaining surrogate solution and spiking solution.

14.9 For the sample in each analytical batch selected for spiking, use the 0.5mL glass syringe designated for BNA spike, to add 0.5mL of BNA spiking solution. **For low level PAHs use 1.0mL of the 1.0ppm LLPAHs spiking solution**. Someone must verify that the spike has been added by initialing the LIMS bench sheet. For DOD QSM projects, all target compounds will be spiked into the LCS and MS/MSD.

14.10 Enter the ID# of the surrogate/spike used on the LIMS bench sheet and, later, in LIMS.

14.11 ACID EXTRACTION: Adjust the pH to between 1.0 and 2.0, using 2mL of 1:1 H2SO4. Add to each sample, spike and method blank. Stopper and shake to insure that pH throughout the sample is changed. Check the drop of liquid hanging from the lid with short-range pH paper. Compare the color to the chart on the pH paper. If the color is not within range add more H2SO4 solution in small increments, as required to attain the proper pH.

14.12 Add 40mL of Methylene Chloride to each empty sample bottle and to the LCS, method blank and MS/MSD funnels. Swirl the 40mL of methylene chloride that you added to the empty sample bottle and transfer to the corresponding separatory funnel.

14.13 Seal and shake the separatory funnel vigorously for 2 minutes with periodic venting to release excess pressure. Alternatively, Teflon funnels may be used and placed in the shaker apparatus with the stopcocks slightly open. When this apparatus is used, the shake should be for 3 minutes.

14.13.1 NOTE: Methylene chloride creates excessive pressure very rapidly; therefore, initial venting should be done immediately after the separatory funnel has been sealed and shaken once.

14.14 Allow the sample to sit for 10 minutes, if necessary, after it has been shaken. It will separate into two layers with the solvent layer on the bottom. If it forms an emulsion (thick, cloudy, viscous, mixture that you cannot see through), drain what you believe to be 40mL into a 250mL centrifuge bottle. If the layers are clearly separated, drain the solvent layer into a 250mL glass beaker.

14.15 Following Steps 14.12 through 14.14, extract two more times with 40mL of methylene chloride. Combine the three solvent extracts into the same 250mL beaker.

14.16 BASE NEUTRAL EXTRACTION: Adjust the pH to 11 or slightly greater, using 10N NaOH. Start by adding 5.0mL to each sample, spike, and method blank. Stopper and shake to insure that pH throughout the sample is changed. Check the drop of liquid hanging from the lid with short-range pH paper. Compare the color to the chart on the pH paper. If the color is not within range add more 10N NaOH in

small increments, as required to attain the proper pH. BNA extraction is necessary when doing low level PAHs.

14.16.1 NOTE: This step is critical to the extraction procedure. Too much NaOH solution could cause you to lose certain Base Neutral compounds. Be careful on this step.

14.17 FOR 8270 extraction: Extract one more time with 40mL of methylene chloride following Step 14.16. Do not combine BN and Acid extracts in a same 250mL beaker. However, you may filter BN and Acid extracts through the same sodium sulfate filter and combine into the same turbo in order to concentrate BN and acid extracts for one final extract.

14.17.1 NOTE: It has been demonstrated that two acid and one BN extraction can be used for normal 8270 samples. This procedure cannot be used for DOD or 625 samples.

14.18 For 625 extractions: extract 3 more times with 40 mL methylene chloride following steps 14.12 through 14.14. Combine BN extracts in the empty 250mL sample beaker as the acid portion concentrates in the turbo vap. Following step 14.24, concentrate the acid extract to ~5mL and then filter the BN extract into the same turbo.

14.19 Prepare to dry the sample by either of the following methods:

14.19.1 Get a ring stand with a double burette clamp attached to it. Cover the burette clamp ends with aluminum foil to prevent the possibility of solvent touching the plastic coated ends and dripping into the extract. Place a drying column into the burette clamp and transfer a small amount of glass wool to the top of it. Tamp it to the bottom with a glass rod so that it adequately covers the hole at the bottom. Add approximately 10 cm of Sodium Sulfate to the column. Rinse with 20 to 30 mL of methylene chloride and discard this rinse into the Chlorinated Waste container in the hood. OR

14.19.2 Set up a ring stand with funnels. Place a small amount of glass wool in the bottom of it, add ~2” sodium sulfate to the column and rinse with 20-30 mL methylene chloride. Discard this rinse into the Chlorinated Waste container in the hood.

14.20 If the extract was drained into a centrifuge bottle, at this point you will need to take it to the centrifuge. Push the "ON" button to turn the centrifuge on. Be sure that the large holders are available for the 250-mL centrifuge bottles. The sample must always be balanced. If necessary use a dummy bottle making it similar weight using reagent water. Set the rpm at 2500 and the temperature at 0°C. Close the lid and be sure to press it down until you hear it click. Move the lever at the front of the lid to the "LOCK" position. Turn the time to approximately 15 minutes and bring it back to 10 minutes. As the rotor begins to move, you will be able to see the rpm's in the digital readout. Stay with the centrifuge until it has come up to the rpm's set to insure that it does not become unbalanced. This looks like 8888 on the digital readout. Should this occur, refer to the manual. When the cycle is complete, the digital readout will read 0000. Push the "OPEN" button and the lid will pop up. Move the lever at the front of the lid to the "UNLOCK" position. Open lid and remove sample. The sample will usually be in two layers with the extract on the bottom.

14.21 Remove any water layer from the extract in the beaker or centrifuge bottle, by one of two methods. Remove with a Pasteur pipette by carefully pulling up the water layer, on top, and not the solvent. Discard this layer in the sink. Use the smallest amount possible of Na2SO4 by sprinkling the top layer with Na2SO4 until it hardens, separates, and drops to the bottom.

14.22 Determine the original sample volume by refilling the sample bottle to the mark made with "white out." Transfer the liquid to a plastic 1000-mL graduated cylinder and record the sample volume on the LIMS bench sheet to the nearest 10-mL and record, later, in LIMS.

14.23 Prepare sample vial tray using labels printed off from LIMS that identify sample numbers, initial/final volumes, client, parameter, and date extracted.

14.24 TURBO-VAP CONCENTRATION

14.24.1 Rinse a Turbo-Vap tube with methylene chloride and arrange it underneath a rinsed, packed drying column or funnel. Pour the extract through the column so that it will collect in the tube. Rinse the 400-mL beaker, which contained the solvent extract twice with 10 to 15 mL of methylene chloride and add each rinse to the column to complete the quantitative transfer. After all the extract has passed through the column, rinse the column with 10 to 15 mL of methylene chloride. Total volume in the glass evaporator tube should not exceed 200 mLs to avoid splattering on the lid of the Turbo-Vap.

14.24.2 Record the numbers of the Turbo-Vap tube on the LIMS bench sheet and place the tube in a metal holder.

14.24.3 Turbo-Vap Operation: Adjust the pressure of nitrogen gas tank to >30 psi. Make sure the tank has 200 psi or more on the main valve. The temperature of the bath should be approximately 40°C -50°C.

14.24.4 Place the glass evaporator tube in the Turbo-Vap. Be sure to push tube down so the tip slides into the sensor well. Close the lid to start concentration. Check that each position with a tube has an orange light showing. If the orange light is not steady, bubbles may be in the sensor and need removal. (See Turbo-Vap manual).

14.24.5 When the beep sounds indicating the end of concentration, the extract will be at approximately one half mL (half way up tip of tube). Remove the tube from the bath. Use a 9" Pasteur pipette to draw up the sample and transfer it to the 2-mL vial. THIS IS THE MOST CRITICAL PART OF THE ENTIRE OPERATION!!! A single drop represents about 10 percent of the total sample. Before you move the tip of the pipette from the tube to the vial, be sure that a drop will not form on the end and fall off.

14.24.6 Draw ~0.25 mL of methylene chloride into a 9’’ Pasteur pipette and add this aliquot to the turbo-vap. Draw the methylene chloride into a pipette and rinse the sides of the tube several times. Transfer this rinse to the appropriately labeled 2-mL vial. Add methylene chloride from the designated clean pipette and repeat the rinsing process until you have ~ 1 mL in the sample extract vial. Compare this volume to a 2-mL dummy vial containing 1 mL of solvent to insure that you have not exceeded 1 mL. The methylene chloride rinse volume must be adjusted to achieve this final volume. Cover the extract with a Teflon-sealed screw cap.

14.25 The extract is now ready to be analyzed. Refrigerate at 4°C or carry directly to the instrument operator. Samples must be signed into the Sample Extract refrigerator. On log provided, enter the sample numbers, the analyst initials, and the date and time the samples were placed into the refrigerator.

14.26 Transfer handwritten extraction details from bench sheet to LIMS and archive bench sheet for future reference.

15.0 Data Analysis and Calculations

Not Applicable to this SOP

16.0 Method Performance

16.1 Demonstration of Capability (DOC): Each analyst must perform a DOC prior to independently extracting samples and yearly thereafter. The analyst must prepare 4 LCS samples. The data is calculated for accuracy and precision requirements.

17.0 Pollution Prevention

17.1 Quantity of chemicals purchased should be based on expected usage during its shelf life and the disposal cost of unused material. Actual reagent preparation volumes should reflect anticipated usage and reagent stability.

18.0 Data Assessment and Acceptance Criteria for Quality Control Measures

Not Applicable to this SOP

19.0 Contingencies for Handling out of control or unacceptable data

Not Applicable to this SOP

20.0 Waste Management

20.1 Laboratory SOP QS14 on Waste Handling discusses general guidelines for the appropriate handling of wastes and the laboratory program on waste management.

21.0 References

21.1 Test Methods for Evaluating Solid Waste, SW-846, Third Edition

21.2 40 CFR, Method 625.

22.0 Tables, Diagrams, Flowcharts, and Validation Data

Not Applicable to this SOP

EMPIRICAL LABORATORIES, LLC
STANDARD OPERATING PROCEDURE

QUALITY SYSTEMS: QS10 **REVISION #: 14** **EFFECTIVE DATE: 20100907**

LABORATORY SAMPLE RECEIVING, LOG IN AND STORAGE

APPROVALS:

Lab Director: _____ Date: 9/8/10

Data Quality Manager: _____ Date: 9/8/10

Section Supervisor: _____ Date: 9/8/10

Changes Summary

Revision 14, 09/07/10

- The SOP combines SOPs 404, 406, 410, 415 and 432 into one SOP with updated naming.

Table of Contents

1. Sample Acceptance Criteria
2. Sample Receiving
3. Sample Log In
4. Sample Storage
5. Laboratory Information Management System (LIMS)
6. Daily Follow Up for Sample Receiving/Log In
7. Miscellaneous
8. Sample Storage, Secure Areas, and Sample Custody
9. Sample Custodian's Duties and Responsibilities
10. Procedure for Treatment of Soil Samples from Quarantined Areas
11. Subcontracting Laboratory Samples
12. Attachments

1.0 Sample Acceptance Criteria

This SOP lists in as much detail as possible our daily procedures for sample receiving, log in and storage of laboratory samples. Keep in mind that there may be project specific requirements that are more strict or different than our routine procedures. In these instances, the project specific requirements must be met and followed. Although a few project specific requirements are detailed in this SOP, i.e. DoD certification issues, not every situation can be addressed. If there is ever any uncertainty on what procedures must be followed, please see the Project Manager or your section manager immediately. If ever in doubt, always go with the more stringent requirements. This document will constantly be reviewed and revised as necessary.

1.1 A sample may be rejected for compliance purposes if it does not meet the following criteria. Analyses may only proceed after notification and approval to proceed from the client or from the laboratory manager.

1.1.1 Sample must be properly preserved and in the proper container for the requested analysis.

1.1.2 Sample integrity must be maintained. The container shall be intact without cracks, leaks, or broken seals.

1.1.3 Adequate sample volume must be received for the requested analysis, including volume for any requested QA/QC (MS/MSD).

1.1.4 The sample ID on the bottle label must match the sample ID listed on the chain of custody.

1.1.5 The sample container label and the chain of custody must be completed with indelible ink. The sample label must be intact and list all necessary information; to include: sample date, sample time, sampler, and sample ID/location. The chain of custody shall also indicate sample date and time, requested analyses, and all necessary client information.

1.1.6 Sample temperature must be less than 6°C or received on ice.

1.1.7 Sample must be within holding time for the requested analysis.

These issues are discussed in more detail below under the “Sample Receiving” section of this document.

2.0 Sample Receiving

2.1 Samples are received at the Empirical Laboratories on 621 Mainstream Drive, Suite 270 Nashville, TN 37228.

2.1.1 The majority of samples are shipped in coolers by couriers such as Federal Express and UPS. All couriers are generally received in the Empirical Laboratories Sample Receiving (SR) area loading dock in back of the laboratory. The laboratory is located close to the Federal Express (FedEx) distribution station, therefore we do pick up our coolers at the FedEx location and transport them back directly to the laboratory. Some coolers and/or samples are delivered directly to the SR area by the sampler and/or client.

2.1.2 Some coolers and/or samples may be received directly by Empirical Laboratories Sample Receiving personnel. If samples are hand delivered by the client make sure that necessary paperwork is included and that you sign and date the chain of custody, as well as record the temperature of the samples on the chain of custody as well. If the *Empirical Laboratories Chain of Custody [Attachment II*] is used

the white and yellow copy of the chain of custody is retained and the pink copy must be given to the client.

2.2 Visually inspect all coolers for tampering, custody seals, (intact if applicable) leakage, etc. If a cooler has been damaged beyond repair, unpack the samples and discard the cooler as to not reuse it. If you suspect a cooler may be damaged or is extremely dirty this cooler must not be reused. If coolers were sent by Federal Express, examine the Federal Express air bills for the number of packages in the shipment and make sure that all the packages (coolers, boxes etc.) in a group have been received. If there are any problems the Project Manager must be contacted immediately. If anything looks unusual, take the time to check it out and document the situation and findings.

2.3 Open each cooler in order to quickly inspect the contents and to locate the chain of custody. Sample receiving personnel should wear the following personal protection equipment: gloves, safety glasses and a laboratory coat. Your signature and the date and time the samples were received must be placed onto the chain of custody. The time received must reflect the actual time the samples were received even though they may be logged into the system at a later time. Samples received on Saturday may be processed on the following Monday morning, or samples received late in the day during the week may be processed the next morning. All cooler(s) must be opened, examined (for leakage, breakage etc.), the temperature measured and the chain of custody signed and dated to reflect the actual date and time which they were received. The samples must be delivered to the appropriate analytical department or put in cold storage as soon as possible.

2.3.1 Attach any shipping receipts, work orders, documentation, etc. to the chain of custody.

2.3.2 If a chain of custody or other paperwork is not sent, the client must be contacted and the samples temporarily placed on hold in cold storage. In some instances the log-in person may complete a chain of custody. The required information may be found on the sample containers or it may be necessary to call the client to get the missing information (i.e. sample ID, collection date and time, etc.). All attempts to encourage our customers to complete a chain of custody or submit written information for samples must be made.

2.3.3 Project specific paperwork may be required. For all projects, a *Cooler Receipt Form [Attachment IV]* must be completed for each cooler received. Sample receiving personnel must begin completing this form as soon as a cooler is received and complete this form as samples go through the log in process.

2.4 The temperature of each cooler or set of samples must be measured as quickly as possible using a thermometer with 0.1°C increments. This thermometer must be calibrated against a NIST certified thermometer quarterly and this information recorded in a bound notebook. The Certificate of Calibration for the NIST thermometer is kept on file at the QAO's desk. The thermometer must be tagged with the unique identification number of SR#1 and serial #; (Sample Receiving #1), the date calibrated and the correction factor. This information must also be recorded in a bound notebook. Only this thermometer can be used for recording the temperature of sample coolers upon receipt.

2.4.1 To measure the temperature, point the IR thermometer at the cooler temperature blank (if supplied) or a direct sample and wait a few seconds for the temperature to stabilize. The IR gun should be held 6 inches away (from the temperature blank or sample) for an accurate reading. Read the temperature to the nearest 0.1 °C.

The corrected value temperature must also be recorded on the chain of custody. (This value will also be recorded into the LIMS at a later point.). All regulatory compliance samples received from North Carolina that does not meet the temperature requirement will be segregated and the client will be notified of the non-compliance. The samples will not be analyzed until we receive client notification to proceed with analyses.

2.4.2 If the temperature exceeds 6°C for any sample, the project manager must contact the client immediately. There may be tighter temperature control limits for specific project requirements. The customer must make the decision to either continue with the analyses or resample. Make sure the client is aware that if the samples are analyzed, the following qualifier is normally included on the final report: "The shipping cooler temperature exceeded 6°C upon receipt to Empirical Laboratories. This may have an impact on the analytical results. The concentration may be considered as estimated." Not all samples for the project will be flagged, just those samples received above 6°C.

Many times we are not able to get in touch with the client quickly and the best judgment on how to handle the samples must be made after discussion with the Project Manager and/or Laboratory Director. The samples may still need to go through the log in process although it may be eventually determined that the samples will not be analyzed or the samples may temporarily be placed on hold and not logged in. Above all do not allow the samples to set out at room temperature for an extended period of time while waiting for a decision.

The only exceptions to the 6°C rule are:

2.4.2.1 Water samples for all Metals, (except Chrome 6+ and mercury) that have been preserved with HNO_3 to a pH of ≤ 2. *Keep in mind that non-aqueous sample for Metals must be cooled.*

2.4.2.2 Samples for Fluoride, Chloride and Bromide.

2.4.2.3 Waste/Product samples for all parameters.

2.4.2.4 Samples generated in the Aquatic Toxicology laboratories and brought directly to Sample Receiving after they are collected. Sample receiving personnel should place these in cold storage as soon as possible.

2.4.2.5 Samples collected locally by Empirical Laboratories personnel or local customers that hand deliver their samples. In some instances these samples may not have had time to cool down; however, these samples should have been placed on ice in an attempt to cool them to the proper temperature. This exception is only applicable if the samples were collected the same day as the laboratory receives them. It should be noted if samples are “Received on Ice” (ROI).

2.5 If several coolers are received at once, they must be inspected to determine the order in which the samples should be unpacked and logged in. The following priorities should be given:

2.5.1 Any analyses which have a 24-72 hour holding time. It is the log-in person's responsibility to notify the department manager or section group leader of such samples via e-mail and verbally.

2.5.2 Any sample which has almost exceeded its' holding time. (Especially watch for this with waters organic extractions, Solids and Sulfides, all of which have only 7 days). A list of parameters and holding times is posted in sample receiving.

2.5.2.1 If a sample is received already out of holding time, this must be documented and the project manager must be contacted. The sample can be analyzed at the client's request, but it will be qualified on the final report as being analyzed out of holding time. The project manager must inform you of the client's need.

2.5.2.2 If a sample is received with limited holding time remaining for any parameter it may be necessary to contact the project manager so that he/she can contact the client. If the sample has to be analyzed on a rush basis to meet the holding time a rush charge may apply. Also it may not be possible to analyze the sample within the holding time due to sample load, etc.

2.5.3 Samples requiring rush turnaround.

2.5.3.1 If sample(s) require 24 or 48-hour turnaround they will take first priority. Other rush requests also have high priority.

2.5.3.2 The project manager and/or section manager must be contacted for approval concerning any unscheduled rush requests.

2.6 Unpack all samples from the cooler. If there are any known or suspected hazards this must be done under a hood. It may be necessary to rinse off the outside of the containers in the sink and/or wipe them off with a paper towel.

2.6.1 Visually inspect them for tampering and custody seals (if applicable). Sort and inventory the samples against the chain of custody by arranging them in the same order as they are listed on the chain of custody. Normally samples are assigned log numbers in the same order as they are listed on the chain of custody but for certain projects or situations it is acceptable to arrange them in a manner which will make them easiest to log in.

2.6.2 Check for leakage and sample container breakage as this could compromise the sample integrity. If any spillage occurred in the cooler make sure this is noted. Also list all the other samples in the cooler as cross contamination could occur. The Project Manager and/or the customer may need to be notified in these situations. It may be necessary to resample.

2.7 Check the chain of custody information against the information recorded on the containers. If these do not agree, this must be documented and the Project Manager must be notified.

2.7.1 If major changes are made on the chain of custody received from an engineering job, then the PE should submit written confirmation of these changes or make the corrections and initial them directly on the chain of custody.

2.7.2 Any error found on the chain of custody must be marked through with one line, initialed, dated and the correction written in.

2.8 Note any unusual requests, methodology, hazards (known or suspected) to the project manager and/or laboratory section manager or analysts before the samples are actually logged in. Make notes of any problems (improper containers, preservatives, temperature, or descriptions, etc.).

3.0 Sample Log In

3.1 After samples have been unpacked, sorted and reviewed, they are then ready to be assigned log numbers and continue through the log in process. Make sure that the parameters for the samples are clearly marked on the chain of custody. Contact the project manager if there are any questions, problems, etc.

3.2 Assign a work-order and sample number to each individual sample and record it on each sample container and the chain of custody

3.2.1 All containers with the same description must have the same sample number even if they have different preservatives and require different tests. However, each different fraction (bottle type and/or preservative) should be designated with a letter (A, B, C, etc.).

3.2.2 Grab and composite samples from the same sample location must be considered as separate samples. It may be necessary to use "grab" or "composite" as part of the sample description to distinguish between the samples. Only assign different log numbers to them if the parameters are clearly marked as grab and as composite. Do not assume that VOC must be analyzed from grab samples so therefore the client must have taken a grab sample.

3.2.3 Sample numbers must begin with 001 at the beginning of each year (e.g. 0101001).

3.3 Check the following items and record this information on the cooler receipt form to further ensure sample integrity. If any of the following requirements are not met it may be necessary to contact the client. We can perform the analyses in most cases and will do so with the client's approval, however the results may be qualified in some manner on the final report.

Preserving sample integrity throughout the log in procedure must be one of our section's top priorities. This includes not only ensuring that the proper chemical preservatives have been added but also that the samples are received and maintained at the proper temperature. Samples should not set out at room temperature if there is a delay. The samples must temporarily be placed in cold storage until you are able to complete the log in procedure.

[Make sure the VOC containers are not temporarily stored in a non designated VOC only storage area.]

3.3.1 Determine if the samples were received at the proper temperature.

3.3.2 The sample descriptions on the bottle should match those on the chain of custody.

3.3.3 Check to determine if the proper chemical preservatives were added to adjust the sample to the correct pH. All regulatory compliance samples received from North Carolina that does not meet the preservation requirement will be segregated and the client will be notified of non-compliance. The samples will not be analyzed until notification to proceed with analyses is received from the client. A list of parameters and the required chemical preservatives is posted in the log-in room. The verification of this preservation will be recorded on the Cooler Receipt Form for all projects. If Empirical Laboratories prepared and shipped out the sample containers they will have been pre-preserved unless instructed otherwise by the client. Complete traceability of the preservatives used to pre-preserve the sample containers and to preserve samples in the log-in area is required. A bound

notebook must be used to trace this information and must include the following: Lot #, Type of preservative, Date Prepped, Amount and Analyst Name. This information must also be labeled on each container, re-pipetter, etc. that the preservative is stored in. Each lot of HNO3 used for Metals preservation must be tested prior to using them for preservation. These analyses are kept on file.

3.3.3.1 The pH of each container (except VOA vials) which requires pH preservation must be checked. Do not open and check the pH of VOA vials in sample receiving/log-in. This information is then documented on the project cooler receipt form.

3.3.3.2 The pH of preserved samples is checked and confirmed using pH narrow range indicator paper. When the client request pH analysis on samples and they must be reported and measured for pH using the narrow range paper rather than a pH meter, the accuracy of each batch of indicator paper must be calibrated to the nearest tenth versus certified pH buffer and recorded into a bound logbook in accordance with SW846 method 9041A pH Paper method.

3.3.3.3 When taking the pH reading, DO NOT PUT THE pH PAPER DIRECTLY INTO THE SAMPLE CONTAINER. Pour up a small aliquot and dispose of this volume after the pH is taken. For some samples (wastes) the indicator paper may not be accurate due to interferences. The observation of the appropriate color change is a strong indication that no interferences have occurred. If it appears as if there is interference, the pH must be measured using the pH meter. [See SOP ATSD-187 pH, Electrometric.]

3.3.4 The following guidelines must be followed to check pH preservation:

3.3.4.1 Water samples for Cyanide analyses must be preserved to a pH of >12.0 with NaOH upon collection. If the pH of these samples is <12.0 upon receipt, the client must be notified immediately. Upon client approval, the sample should then be adjusted to >12.0.

3.3.4.2 Water samples for Metals analyses must be preserved to a pH of <2.0 with HNO_3 upon collection. If the pH of these samples is >2.0 upon receipt, the client must be notified immediately. Upon client approval, the sample should then be adjusted to <2.0.

3.3.4.3 Samples requiring analyses which are preserved with H_2SO_4 (i.e., Nitrogen compounds, Total Phenolics, Oil and Grease, Total Phosphorus, etc.) should be preserved to have a pH of <2.0. If the pH of these samples is >2.0 upon receipt, the client must be notified immediately. Upon client approval, the sample should then be adjusted to <2.0. Samples for sulfide analysis must have a pH >9.

3.3.4.4 If a sample is not properly preserved, log-in personnel must either do the following:

3.3.4.4.1 To meet project specific requirements, the client must be notified before preserving or adding additional preservative to the sample unless otherwise instructed. If the client instructs us to add chemical preservatives to a sample, complete traceability of the preservatives used is required.

3.3.4.4.2 For other projects it may be acceptable to preserve the sample accordingly before the sample is placed in storage. Complete traceability of the preservatives used is required.

3.3.4.4.3 All metals samples preserved upon receipt must be held 24 hours before proceeding with analysis. The client must be notified to see if the lab is to proceed with analysis.

3.3.4.5 In some instances it may not be possible to adjust the sample to the proper pH due to matrix problems which cause excessive foaming or require an unusually large amount of acid. Do not continue to add acid if a few mL's of acid does not lower the pH. Notify the Project Manager, Metals Manager and/or analyst. They will make the decision if the sample will be diluted, not analyzed, etc. Make sure you note on the cooler receipt form and in the LIMS notes that the sample is not at the proper pH as well as any useful information (i.e., foaming, strong odor, etc.).

3.3.4.6 Samples may be generated in the Aquatic Toxicology Laboratories and brought directly to Sample Receiving after they are collected but before they are preserved. Log-in personnel must preserve the samples accordingly before they are placed in storage. Complete traceability of the preservatives used is required.

3.3.5 Check to make sure samples are in proper containers and that there is adequate volume for all the parameters requested and no leakage.

3.3.6 If VOA vials are present, each vial must be inverted and checked for head space. "Pea-sized" bubbles (i.e. bubbles not exceeding 1/4 inch or 6 mm in diameter) are acceptable and should be noted. Large bubbles or head space is not acceptable and this information must be documented on the cooler receipt form. If this occurs, the client must be contacted. The samples can be analyzed with their approval, however the report will be qualified and the data may be questionable. All VOA vials will be preserved with $Na_2S_2O_3$ (0.2g) when chlorine is known to be, or suspected to be present.

3.3.7 All chlorinated effluent samples received for Cyanide must be checked for residual chlorine. The one liter sample container should initially contain 1 to 2g/L of Ascorbic Acid. <u>Potassium Iodide starch indicator paper will be used for detecting the presence of residual chlorine. DO NOT PUT THE TEST PAPER DIRECTLY INTO THE SAMPLE CONTAINER. Pour up a small aliquot, neutralize, test and dispose of this volume after the sample is checked.</u> If the test paper turns blue, the sample must be treated for residual chlorine. Add ascorbic acid approximately 0.6g at a time and recheck the sample until there is no residual chlorine present. If the sample required this treatment this information must be included on the cooler receipt form. This must be done by log-in personnel before leaving the receiving area. It may be necessary to notify the Inorganic Manager and/or analyst.

3.3.8 Be aware of holding time requirements.

3.4 Notify the proper analyst if samples have been logged in for analyses which have a 24-48 hour holding time or if a 1-2 day turnaround has been requested.

4.0 Sample Storage

4.1 After samples have been correctly logged in they are then transferred to one of the following cold storage areas and arranged in numerical order by the assigned log in/LIMS sample number. ***Note that aqueous VOC samples must be segregated from all other samples.***

4.1.1 The refrigerator in the MS Lab: All aqueous VOC's must be stored in this refrigerator. Storage blanks consisting of organic free water from the laboratory may be required for specific projects. These will be analyzed for VOCs only. ***Storage blanks are required for all DOD projects.***

4.1.2 Walk in Refrigerator: All aqueous samples for all analyses must be stored in this refrigerator.

4.1.3 Soil Walk-In Refrigerator: All quarantined and non-quarantined soil samples for all analyses must be stored in this refrigerator.

4.1.4 VOC Soil Freezer: All soil samples requiring VOC analysis with short hold prep times (Encores, Organic Free Water Terracores, etc.) must be stored in this freezer.

4.1.5 VOC Dry Storage Rack: All water VOCs that have exceeded double holding time can be stored on this rack. These samples are stored here segregated alone to ensure no cross contamination occurs between VOC samples and other non-VOC aqueous samples.

4.2 Quarantined soils are those quarantined by the US Department of Agriculture. A separate disposal log must be maintained for these soils including the location, date and quantity of the soil received and processed. Soil residues from quarantined samples must be treated according to regulations after testing. Quarantined soils are defined as:

4.2.1 Soil taken from much of the southeastern US and parts of New York and Maryland at a depth of three feet or less. *Soils from three feet or more are not regulated provided they are stored separately.* A map of the regulated areas in the United States entitled ***Soil Movement Regulations [Attachment VIII]*** is posted in the log-in room.

4.2.2 All soils taken from foreign sources, US. Territories and Hawaii.

NOTE: All soils are treated as quarantined soils and are disposed of in accordance with USDA regulations. Above for information purposes only.

4.3 All samples must be stored in one of the four refrigerators detailed above with the following exceptions:

4.3.1 Matrices that may be adversely affected by the cold temperature. (E.g. surfactant samples, multi-phase samples).

4.3.2 Highly contaminated waste or product type samples that could jeopardize the integrity of other samples in the walk in cooler. Often these can be stored at room temperature. If these require refrigeration see the project manager for other options.

4.4 The temperature of each sample refrigerator must be monitored and recorded each day by Wet Chem personnel by the following method. A Mercury thermometer or digital min/max thermometer with 1° increments must be used. Each thermometer must be calibrated against a NIST certified thermometer once a year **(digital thermometers quarterly)** and this information recorded in a bound notebook. The thermometers must be tagged with a unique identification, the date calibrated and the correction factor.

The tolerance range for all refrigerators is 1 to 6°C. If the temperature exceeds this range, corrective action measures must be put in place immediately. The Wet Chemistry Manager, Organic Manager, and Laboratory Director will be notified in order to assess the situation. It may be necessary to put a service call in to the refrigeration repair service.

4.5 All personnel removing samples from any refrigerator must sign them in and out. This is done by completing the ***Sample Custody Form [Attachment IX]*** which is attached to the door of each refrigerator. These completed forms are kept on file. The individual performing the processing becomes responsible for the samples at this point. The samples are maintained in the secure possession of the individual processing the samples. When the processing is completed, the samples are returned and signed back into the appropriate storage area. It must be noted if the entire sample volume was used and that the container was discarded.

4.6 The water walk in refrigerator in the sample room is the largest refrigerator and stores a large majority of the samples. A back up compressor is hooked into the system and scheduled to automatically come on if the main compressor fails. There is a digital min/max thermometer, which monitors the temperature 7 days a week.

4.7 As stated above the temperatures for all refrigerators that samples are stored are checked each day Monday-Friday and monitored seven days a week with min/max thermometers. Pay close attention to these readings and watch for signs of possible problems.

4.8 A temperature maintenance record book is kept for each refrigerator.

4.9 Samples must be held for a minimum of 30 days after the final report unless specified otherwise. For USACE projects, samples must be held for a minimum of 45 days after the final report unless otherwise specified. See SOP QS14 entitled Analytical Laboratory Waste Disposal SOP for guidance on disposal of samples.

5.0 Laboratory Information Management System (LIMS)

5.1 Log the sample information into the LIMS for each sample. Every attempt should be made to get every sample logged into the LIMS by the end of the day. All information entered should be clearly stated and recorded on the COC provided. After opening the main menu of the LIMS, select the 'Work Orders' tab from the 'Sample Control' drop down menu. Now click on the 'Add' button to create a new Work Order. You will see the following:

5.1.1 Client: Select the client I.D. by clicking on the pull-down and choosing from the client list. This list is in alphabetical order. If the desired client is not on the list, a new client must be created by the project manager or I.T. director.

5.1.2 Project: Click on 'Projects' and choose the project I.D. The projects will be client specific. After the project is chosen the "project information" areas should populate. The 'Project Name,' 'Project Number,' 'TAT,' 'Client Project Manager,' 'Lab Project Manager,' and 'Comments' information should also appear. If there are no applicable project choices, a project must be created by the project manager or I.T. director. There are two types of projects:

5.1.2.1 Internal – Empirical Laboratories projects;

5.1.2.2 External – direct laboratory clients.

5.1.3 Comments: This area is to be used to note any information from the project manager for all work orders of this project. It can also be used to list any work order specific notes; this includes but is not limited to information concerning

rush turnaround, deliverables or other QC requirements, analyte concentrations, safety issues, quarantined soils, preservation or matrix problems, etc.

5.1.4 Received By: Enter the name of the person who received the samples.

5.1.5 Logged In By: Enter the name of the person who logged in the samples.

5.1.6 Received: Enter the date and time received separated by a space and using military time. Example: *08/02/2008 08:30*.

5.1.7 Project/Package Date Due: After the date and time received have been entered, the date due for both of these fields will be calculated. If this information is not correct or needs to be amended later, check with the project manager before doing so.

5.1.8 Shipping Containers: Click on the 'Coolers' button and enter the temperature and condition upon receipt. If more than one cooler was received, each cooler must be assigned a different name. For example, if these came in by dedicated courier, enter the last four numbers of the Tracking Number as the name. After all of a cooler's information has been entered (received on ice, where custody seals present, preservation confirmed, COC/container labels agree, sample containers in-tact) click the 'Save' button. If more than one cooler was received, click the 'Add' button and repeat the process above, then click 'Done' after all the coolers' info has been saved.

5.1.9 COC Number: If an identifiable COC number is listed, record that ID here.

5.1.10 Shipped By: Enter the courier used to deliver the samples. If the samples were picked up by a lab employee or dropped off by the client/representative, enter 'Hand-Delivered.'

After these items have been completed, click 'Save,' then the 'Samples' button to continue. To begin entering information for a sample, click the 'Add' button on the bottom of the Samples screen.

5.1.11 Sample Name:

5.1.11.1 Only abbreviate if description is too long for the spaces allotted in the LIMS. This information should come directly from the chain of custody. The sample ID entered into the LIMS will be the sample ID on the final report.

5.1.11.2 If no sample ID is provided, or is indistinguishable from other samples listed, contact the project manager to ascertain distinction in the samples. Include date as part of the description if this is the only way to differentiate the samples.

5.1.11.3 When logging in trip blanks that do not have an ID assigned by the client, list them as "Trip Blank # _____". This information should be on the containers. A log book must be kept in the sample kit room which lists all trip blanks and the date they were filled. This will ensure consistency with the descriptions for trip blanks.

5.1.12 Collection Date: Enter the date and time the sample was collected. You must use military time and separate by a space. Often the time collected is not given. Although this is a sampling requirement, this information may not be crucial unless a parameter with a short holding time or a data deliverables package is required. In the event that a sample collection time is not listed on the COC or the sample container, a default time of 00:00 can be used temporarily until client

verification. Once verified, then the correct sample collection time must be input into LIMS. If the COC and sample containers do not list a collection date and time, this must be documented on the cooler receipt form and the project manager must be notified. All attempts should be made to get all our clients to supply this information.

5.1.13 Lab/Report Matrix: Click on pull down and select matrix. Many times it is difficult to discern the matrix if it is not specified on the COC, and log-in personnel must use their best judgment with regard to analytes/methods requested. Keep in mind that the detection limits and units on the LIMS reports are linked to the matrix. In some cases it may be necessary to ask the Section Managers about the matrix selection. Log-in may do a dilution test to distinguish water samples from oil samples if the COC does not clarify a sample matrix if need be.

5.1.14 Sample Type: This is used to differentiate between special types of samples (i.e. Field Duplicates, Equipment Blanks, Trip Blanks, etc.). If there is no definite way to determine that a sample should be classified as something else, then "SAMP-Client Sample" will be selected as the sample type. Do not list a sample as anything other than a Client Sample unless noted on the COC of are instructed by the client to do so.

5.1.15 Container: Click on the drop down list and select the appropriate bottle type. If multiple bottles are received for the same sample, move down to the next line and select all other containers as required. Repeat this process until all containers for the sample are listed. As each container is entered, an individual number is assigned to it by the LIMS system. This number is also listed on the container labels that are printed from the LIMS, and is placed on the corresponding bottle for container tracking purposes.

5.1.16 pH (Container Preservative): Use this to document the pH check information taken during sample unpacking. If no preservative was used, then nothing is required in this field.

5.1.17 Comments: Enter any information that is applicable at the sample level.

5.1.18 Field Analysis: Click on field analysis tab and enter field information when provided.

5.1.19 Work Analyses: Select all parameters requested for the sample from this list.

5.1.19.1 If the required test code is not listed, and the sample matrix is not a contributing factor, click the Work Analyses tab to open the All Analyses list. When selecting from this expanded list, be careful to select the proper method as all methods available for the current matrix will be selectable.

5.1.19.2 If any analyses are selected from the All Analyses list, the project manager in charge should be notified so that the correctness of methods and pricing can be checked and updated as needed.

5.1.19.3 All preparation codes for analytes are entered and stored by the system independently of the test codes selected, except in the cases of Dry Weight analysis, and TCLP/SPLP preparation (tumbling). In the case of the TCLP/SPLP prep codes, these are entered alongside the other required analyses automatically by the LIMS when a TCLP/SPLP analyte is selected. As for Dry Weight, it is required for all solids testing except in

the cases of TCLP/SPLP analysis, Explosives only analysis, and/or any pure product/non-soil based sample when specified by the client.

5.1.20 Analyses Comments: These comments should be used for any notes that only apply to that particular test code.

5.1.21 RTAT: If the Rush Turn-Around Time for this sample is known at the time of log-in, this information should be updated here.

5.1.22 Save: Once all applicable information is entered for a sample, click the save button. At this time the LIMS applies the Laboratory Sample ID to the sample. This is a four part ID code composed of the following:

5.1.22.1 A 2-digit numeral of the year. Example (**08**11248-06).

5.1.22.2 A 2-digit numeral of the month. Example (08**11**248-06).

5.1.22.3 A 3-digit numeral of the work order number. This number reset to 001 at the beginning of each month. Example (0811**248**-06).

5.1.22.4 A 2-digit numeral of the sample number separated by a dash. Example (0811248**-06**). This number is different for each sample in a work order.

5.1.23 Add/Edit/Copy: Use these selections to add more samples to the work order, or to change existing information prior to label printing.

Once all the tests have been selected and all samples have been added in the work order, a work order summary and all container labels are printed. Labels are checked for accuracy against the containers while being labeled. At this point log-in of this group of samples is complete.

5.2 After log-in of a work order is complete, the COC can then be scanned into the system and attached to the work order on the Work Order screen. The work order then must be updated to Available status so as to be seen by the analysts.

6.0 Daily Follow Up for Sample Receiving/Log In

6.1 Wipe out the inside of coolers and return all Empirical Laboratories coolers to the sample kit room.

6.2 At the end of the day organize all paperwork received and generated for the day. The following should be given to the Project Managers:

6.2.1 The original chains of custody and yellow original or copy of each. The Cooler Receipt Forms will accompany the COC for the project.

6.2.2 Any information (letters, regulatory limits, etc.) from a client which was received with any samples.

6.3 All the above information from the day will be reviewed as soon as possible.

6.3.1 If any corrections or changes are required, all laboratory personnel will be notified by distributing a ***Sample Log Change Form [Attachment XIII]*** through email distribution. A ***Sample Log Change Form*** by the project manager will also be sent out if a client adds or deletes any parameters, changes sample IDs, etc.

6.4 Sample Receiving will distribute the following to the appropriate laboratory personnel:

6.4.1 Copies of the LIMS receiving reports to necessary laboratory personnel.

6.4.2 Original (white copy) chains of custody are given to the project manager.

6.4.3 Copies of any project/sample specific information to the Section Manager and analysts.

6.5 Information will be filed as follows:

6.5.1 Chains of custody:

6.5.1.1 Original (white copy) is returned to the customer with the final report along with the CRF.

6.5.1.2 Pink copies should be retained by the sampler.

6.5.2 Sample Log Change Forms

6.5.2.1 Sample Log Change Forms are distributed through email to all laboratory personnel.

7.0 Miscellaneous

7.1 All projects which require deliverables or other QC requirements should be listed in the notes section of the LIMS.

7.2 If samples are received from a new client or a new job number that is not in the LIMS, a new client code must be set up. This information should be on the chain of custody or it may be necessary to contact the customer if the information is incomplete.

7.3 Samples from the Aquatic Toxicity Laboratory (ATL) are logged into the LIMS for billing and long-term tracking purposes. The receiving information and proper assignment of tests are reviewed by the ATL manager. The samples are then logged in by ATL personnel.

7.4 All log books used in the Sample Receiving and Sample Storage Areas are numbered. The following log books are presently maintained. All log books must be "Z"ed out. The Sample Receiving Group Leader will review the log books each week to check for completeness.

Log Book ID	Log Book Description
LI014	Trip Blank Prep Log Book
LI009	Tracking of VOC Trip Blanks Shipped
LI011	Quarantined Soil Treatment Log Book
LI012	Acid Neutralization Log Book
LI015	Sample Receiving and Disposal Log Book
LI010	Kit Room Preservation Preparation Log Book

8.0 Sample Storage, Secure Areas and Sample Custody

8.1 Empirical Laboratories, LLC is located at 621 Mainstream Dr. suite 270 Nashville, TN 37228 on the first floor. This building is locked and monitored by an alarm system after normal business hours. No unauthorized personnel are permitted within the facility without a proper escort and a visitor’s badge. During non business hours, all doors to the building are locked and secured by an alarm system. All front and back doors are locked and only Empirical Laboratories, LLC personnel have a key to access the building. Upon unlocking the door and entering into the laboratory, then the employee is to deactivate the alarm system using the assigned 4 digit alarm code assigned to them by Human Resources. Each employee is assigned their own designated alarm code, with no code being assigned twice. There is a buzzer at the door to Login to allow entry for sample and supply deliveries.

8.2 Log-in is also responsible for maintaining a Sample Receiving Custody and Disposal Form for samples received. This form is to be filled out before the actual disposing of any sample in house. Once the document is complete, the original will be kept on file. The following information must be logged onto this form:

- 8.2.1 Client and Log #s
- 8.2.2 Date/Time Unpacked
- 8.2.3 Logged In/Numbered By (Initials)
- 8.2.4 2nd Checked By (Initials)
- 8.2.5 Date/Time Placed in Cold Storage
- 8.2.6 Storage Area (Walk In, Blue Air-VOCs, Quarantined Soils, Quarantined-VOC, Other)
- 8.2.7 Disposed of By/Date
- 8.2.8 Method of Disposal

8.3 Sample extracts and digestates are stored in the following areas:

- 8.3.1 All metals digestates are stored in the metals instrument laboratory. The transfer from the digestion analysts to the ICAP analysts is documented in the metals digestion log book.
- 8.3.2 Non - ZHE TCLP extracts are returned to the refrigerator in which the original samples are stored. For ZHE samples, the extract is returned to the refrigerator in which the original VOC sample containers are stored.
- 8.3.3 Extracts from medium level VOC analyses are also stored in the Soil Walk – in or VOC sample freezer in the VOC Lab.
- 8.3.4 All Organic extracts are stored in a Beverage Air side by side refrigerator in the organic extraction laboratory.

8.4 The generation of all sample extracts/digests and their movement through the laboratory will also be tracked on a laboratory custody sheet or in a log book. The individual performing the processing becomes responsible for the samples at this point. The samples are maintained in the secure possession of the individual processing the samples. When the processing is completed, the extracts are returned and signed back into the appropriate storage area. The metals digestates are not removed from the metals instrument laboratory.

After the analytical results have been reported, the original samples, sample extracts, and digestates will remain in secure storage until they are disposed of in accordance with the Waste Disposal Standard Operating Procedure (SOP QS14).

The following personnel as of September 1st, 2010 have access to all sample storage areas:

Amy Barnett	Antonio Monteiro
Betty Deville	Brian Richard
Chase Block	Christy Thompson
Crystal Brand	Dahae Kim
Christine Gramada	Delia Weber
Eric Coburn	Franklin Rivers

Gary Quick	Gwen Hallquist
Herbie Johnson	Jade Holliman
Jessica Sales	Karu Huka
Kendra Gentry	Marcia McGinnity
Margarett Pitt	Mark Cobb
Melanie Sams	Melynda Nelson
Penny Cormier	Rachael Mahan
Randy Ward	Renee Vogel
Rick Davis	Roger Burr
Russell Townsend	Sonya Gordon
Veronica Mullen	William Lancaster
William Schwab	Sabina Kemp

In the event that an employee is terminated, the supervisor is responsible for collecting the employee's keys.

9.0 Sample Custodian's Duties and Responsibilities

9.1 The Sample Custodian is responsible for the receiving; log in, tracking and disposal of all samples. The duties of this position are performed by the persons in the sample receiving section of the laboratory. These individuals are the primary custodian, secondary custodian and section supervisor. Although other laboratory personnel may assist with the duties, this is done under supervision and direction of one of the three individuals listed above. The sample custodians are responsible for the following:

9.1.1 Receive all samples for the analytical laboratory and maintain chain of custody. This includes documenting the validated time/date of receipt.

9.1.2 Maintain the flow of samples through the log in process and make them available to the analysts on a timely manner. This includes prioritizing samples/projects based on turnaround requests and holding times.

9.1.3 Assign the correct laboratory ID sample numbers and validate that this information is properly labeled on the containers and entered into the Laboratory Information Management System (LIMS).

9.1.4 Validate that every sample proceed through all steps of the log in process. This includes checking the following to determine that the sample integrity has been upheld from the time the sample is collected until it is received in the laboratory: proper containers with ample sample volume, correct preservation, sample dates/times to ensure that holding times can be met, condition of the sample containers, headspace of vials for VOC analysis, sample ID discrepancies and completeness of the chain of custody.

9.1.5 Communicate any information or specific requests by the client that are listed on the chain of custody, i.e., method information, detection limits, specific analytes, reporting information, turnaround information, potential hazards etc. They are also responsible for forwarding any additional information that may be received

along with the samples, i.e. permit or regulatory information, letters, etc. to the laboratory managers.

9.1.6 The sample custodian is personally responsible for continuing to uphold the sample integrity throughout the log in procedure and until the time when the samples are properly stored and disposed.

9.1.7 Ensure that samples are transferred into the proper storage area and that these secure areas are locked after hours.

9.1.8 Maintain all log books used in the section. These must be kept up to date, complete, neat and orderly.

9.1.9 Maintain the sample receiving and sample disposal areas in a clean, orderly and safe manner.

9.1.10 Follow good laboratory practices and safety procedures.

9.1.11 Communicate all problems, discrepancies, etc. to the section supervisor and laboratory Director.

9.1.12 In situations where the client cannot be contacted, the sample custodian along with the section supervisor must apply the best judgment on how to handle the samples or situation.

9.1.13 Complete all the necessary paperwork and section forms including Cooler Receipt Forms, LIMS daily print outs, Sample Receiving Custody and Disposal Form, etc. in a timely manner.

9.1.14 Dispose of all samples in a manner that is safe, cost efficient, timely, meets project requirements and is in accordance with hazardous waste regulations.

9.1.15 The sample custodian(s) are responsible for compliance of all procedures outlined in this SOP and the following SOPs. They must maintain personal copies of each SOP:

9.1.15.1	SOP QS10	Laboratory Sample Receiving, Login and Storage
9.1.15.2	SOP QS14	Analytical Laboratory Waste Disposal
9.1.15.3	SOP QS11	Field Sampling & Bottle Kit Preparation

10.0 Procedure for Treatment of Soil Samples from Quarantined Areas

10.1 This summary is to explain the handling and treatment of soil samples that come from USDA quarantined areas of the United States, territories of the United States and foreign sources. This treatment is done to prevent the spread of pests to other areas.

10.1.1 When soil samples are ready for disposal, separate out soils that are from quarantined areas that need to be treated. Quarantined areas are from the southern United States (see attached maps), from United States territories such as Puerto Rico, and from foreign countries.

10.1.2 Only quarantined non-hazardous soil samples with containers that are less than three feet in depth will be treated by this procedure. Hazardous samples will have to be treated differently. A list of samples to be treated will be determined by the login supervisor.

10.1.3 Log the samples to be treated in the Soil Treatment Logbook as to location, date, and quantity.

10.1.4 Turn the oven on. Place soil samples in their containers uncovered in the oven. After oven reaches 121°, heat samples for 2 hours. Treat container liners too. When time is up, remove soil samples with gloves or tongs and cool.

10.1.5 After samples have cooled, put them in the non-hazardous soil barrel for disposal.

11.0 Subcontracting Laboratory Samples

11.1 Sample receiving is responsible for handling all aspects of shipment of subcontracted samples. Once samples have been confirmed as sub-outs, login then notifies the project manager that subout samples are in house. The project manager then generates a purchase order number for the specific subout samples. Once the purchase order is generated by the project manager, then login prints out a subcontracted chain of custody from LIMS that will accompany the subout samples during transit. Then login packs up the samples into a cooler, ices them down (if necessary) to keep the samples chilled during transit, and then the cooler is shipped to the subcontracted laboratory.

11.2 Chain of Custody/Shipping Requirements

11.2.1 When the samples are sent out, a completed chain of custody must be sent with the samples. Make sure to include the following information:

11.2.1.1 Be specific in your analyses request. List the method number if applicable and/or any specific analytes required. This should already have been discussed with the laboratory.

11.2.1.2 List the name of sub contract laboratory and the date shipped or delivered.

11.2.1.3 List the Empirical Laboratories; LLC LIMS log # as the sample description on the chain of custody. Do not list the actual client name or actual project information.

11.2.1.4 Record the date and time that the samples were sampled on the chain of custody.

11.2.1.5 Results and invoice should be sent to the project manager.

11.2.2 Two copies of the sub contract chain of custody should be retained. One copy should be stapled to the original chain of custody received from the client and the other should be stapled to the copy in log in.

11.2.3 Make sure samples are packed well so they will not break or spill in shipment. Ice must be packed in the cooler to keep the samples cold if chilling is required.

11.2.4 A P.O. must be completed and approved by the project manager prior to sample shipment. Sample receiving should then keep a copy of this P.O. for their records.

Attachments to QS10

I	Chain of Custody Record
IV	Cooler Receipt Form
V	List of Short Holding Time Parameters
VII	Sample Receiving Custody and Disposal Form
VIII	Map of Quarantined Soil Areas in the U.S.
IX	Laboratory Sample Custody Form for Walk in Refrigerator
X	Container Codes for the LIMS
XIII	Sample Log Change Form (Green Sheet)

[Attachments II, III, VI, XI, XII, and XIV were removed during the editing process and not added to the QS.]

Attachment I

EMPIRICAL LABORATORIES, LLC - CHAIN OF CUSTODY RECORD

SHIP TO: 227 French Landing Drive, Suite 550 ♦ Nashville, TN 37228 ♦ 615-345-1115 ♦ (fax) 615-846-5426

Send Results to:	Send Invoice to:	Analysis Requirements:	Lab Use Only:			
Name _____	Name _____		VOA Headspace	Y	N	NA
Company _____	Company _____		Field Filtered	Y	N	NA
Address _____	Address _____		Correct Containers	Y	N	NA
City _____	City _____		Discrepancies	Y	N	NA
State, Zip _____	State, Zip _____		Cust. Seals Intact	Y	N	NA
Phone _____	Phone _____		Containers Intact	Y	N	NA
Fax _____	Fax _____					
E-mail _____	E-mail _____		Airbill #: _____			
Project No./Name:	Sampler's (Signature):		CAR #: _____			

Lab Use Only Lab #	Date/Time Sampled	Sample Description	Sample Matrix	Comments	No. of Bottles	*Lab Use Only* Containers/Pres.

Sample Kit Prep'd by: (Signature)	Date/Time	Received By: (Signature)	REMARKS:
Relinquished by: (Signature)	Date/Time	Received By: (Signature)	
Relinquished by: (Signature)	Date/Time	Received By: (Signature)	
Received for Laboratory by: (Signature)	Date/Time	*Temperature*	

Details:

Page _____ of _____

Cooler No. ____ of _____

Date Shipped _____

Shipped By _____

Turnaround _____

Distribution: Original and yellow copies accompany sample shipment to laboratory; Pink retained by samplers.

Attachment IV

EMPIRICAL LABORATORIES
COOLER RECEIPT FORM

LIMS Number: _____ Number of Coolers: _____ of _____

Client: _____ Project: _____

Date/Time Received: Date cooler(s) opened:

Opened By (print): (signature): _____

Circle response below as appropriate

1. How did the samples arrive?: FedEx UPS DHL Hand Delivered

EL Courier Other: _____

If applicable, enter airbill number here: _____

2. Were custody seals on outside of cooler(s)? ..... Yes No

How many: _____ Seal date: _____ Seal Initials: _____

3. Were custody seals unbroken and intact at the date and time of arrival?	Yes	No	N/A
4. Were custody papers sealed in a plastic bag included in the sample cooler?	Yes	No	N/A
5. Were custody papers filled out properly (ink, signed, etc.)?	Yes	No	N/A
6. Did you sign custody papers in the appropriate place for acceptance?	Yes	No	N/A
7. Was project identifiable from custody papers?	Yes	No	N/A
8. If required, was enough ice present in the cooler(s)?	Yes	No	N/A

Type of Coolant: WET DRY BLUE NONE Temperature of Samples upon Receipt: _____ °C

Dates samples were logged-in:

9. Initial this form to acknowledge login of sample(s): (Name): _____ (Initial): _____

10. Were all bottle lids intact and sealed tightly?	Yes	No	N/A
11. Did all bottles arrive unbroken?	Yes	No	N/A
12. Was all required bottle label information complete?	Yes	No	N/A
13. Did all bottle labels agree with custody papers?	Yes	No	N/A
14. Were correct containers used for the analyses indicated?	Yes	No	N/A
15. Were preservative levels correct in all applicable sample containers?	Yes	No	N/A
16. Was residual chlorine present in any applicable sample containers?	Yes	No	N/A
17. Was sufficient amount of sample sent for the analyses required?	Yes	No	N/A
18. Was headspace present in any included VOA vials?	Yes	No	N/A

If Non-Conformance issues were present, list by sample ID: _____

_____ CAR#: _____

ATTACHMENT V

Short Holding Time Parameters

(Immediate-72 hours)

Parameter	Holding Time
pH	Immediate [a]
Sulfite	Immediate [a]
Temperature	Immediate [a]
Residual Chlorine	Immediate [a]
Coliform (Fecal and Total) RCRA/WW	6 hours
Hexavalent Chromium (Cr +6)	24 hours
Odor	24 hours
Coliform (Fecal and Total) *Drinking Water only*	30 hours
BOD	48 hours
Color	48 hours
Settleable Solids	48 hours
MBAS	48 hours
Orthophosphate	48 hours
Turbidity	48 hours
Nitrite	48 hours
Flashpoint	72 hours [b]

[a] Immediate generally means within 15 minutes of sample collection.

[b] This is an internal holding time. The method does not specify a holding time.

Attachment VII

Empirical Laboratories, LLC

SAMPLE RECEIVING CUSTODY AND DISPOSAL FORM

Date Samples Received _____

Client	Log #'s	Date Unpacked	Logged In/ Numbered By	2nd Checked By	Placed in Storage By	Date Placed in Storage	Storage Area (1)	Disposed of By/Date	Method of Disposal

(1) W=Walk in Refrigerator
HV= Hobart Refrigerator, VOC samples only
Q= Refrigerator for Quarantined Soil Samples
QV= Refrigerator for Quarantined Soil, VOC samples only
O=Other (Must Specify)

L:\LOG-IN\QC-RFC2.DOC
Revised 12/31/03

ATTACHMENT VIII

oil Movement Regulations

(Quarantined Soils by US Dept. of Agriculture)

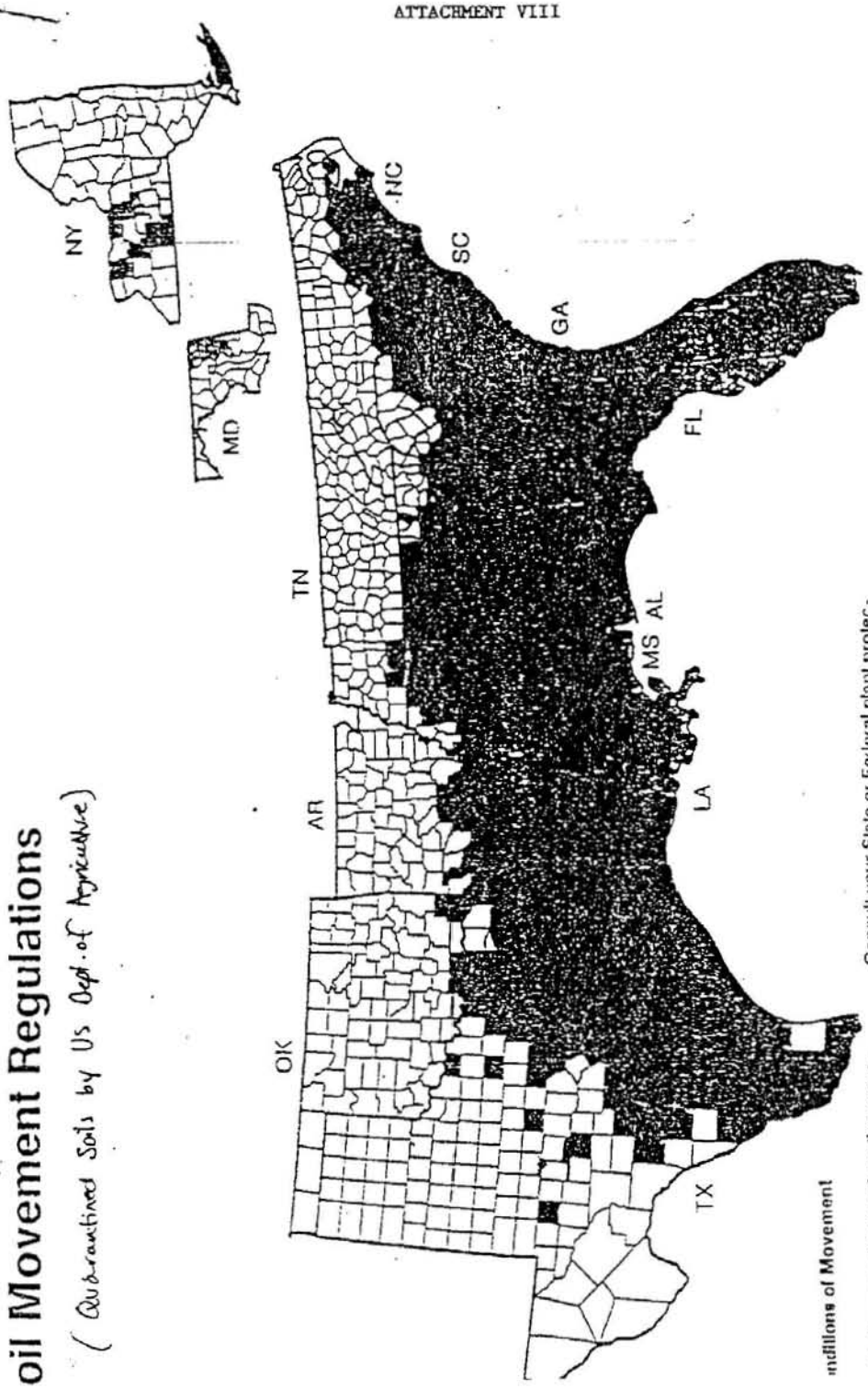

Consult your State or Federal plant protection inspector or your county agent for assistance regarding exact areas under regulation and requirements for moving regulated articles.

nditions of Movement

-strictions are imposed on the move-
nt of regulated articles from a regulated
a as follows:
on red areas into or through white
eas. Movement within red areas may be
gulated.

Attachment IX

Empirical Laboratories

EMPIRICAL LABORATORIES, LLC
LABORATORY SAMPLE CUSTODY FORM
WALK-IN REFRIGERATOR

Sample Log # (s)	Time/Date/Initials Removed	Time/Date/Initials Returned (Note if all Sample Used)	Notes/ Comments	Task Performed

Attachment X

Preservatives		Types of Container	
NI	*HNO3*	**A**	*1 LITER - PLASTIC*
NF	*HNO3 (Filtered)*	**B**	*500 mL - PLASTIC*
SU	*H2SO4*	**C**	*250 mL - PLASTIC*
SH	*NaOH*	**D**	*120 mL - PLASTIC*
ZN	*ZnAC / NaOH*	**EN**	*ENCORE PAK*
HY	*HCl*	**F**	*1 LITER - GLASS CLEAR WIDE MOUTH*
		G	*1 LITER - GLASS CLEAR BOSTON ROUND*
		H	*1 LITER - GLASS AMBER*
		I	*250 ml. - AMBER*
		J	*VOA VIALS - (40 ml.)*
		K	*500 ml. - (16 oz)*
		L	*250 ml. - (8 oz)*
		M	*125 ml. - (4 oz)*
		N	*60 ml. - (2 oz)*
		O	*OTHER*
		P	*PLASTIC BAG -1 Gallon*

Attachment XIII

SAMPLE LOG CHANGE FORM

DATE:

Workorder:

CLIENT:

PARAMETERS:

EMPIRICAL LABORATORIES, LLC
STANDARD OPERATING PROCEDURE

QUALITY SYSTEMS: QS14 REVISION #: 06 EFFECTIVE DATE: 20100831

ANALYTICAL LABORATORY WASTE DISPOSAL

APPROVALS:

Lab Director: _____ Date: 9/8/10

Data Quality Manager: _____ Date: 9/8/10

Section Supervisor: _____ Date: 9/8/10

9/9/10

Changes to this Revision – R06 08/31/2010

- Revision to SOP405 R05 dated 6/23/2009.
- Changed the document control and named this as QS14 R06.
- Minor cosmetic/grammatical changes made.

Analytical Laboratory Waste Disposal
Standard Operating Procedure

I. SCOPE AND APPLICATION:

Laboratory waste includes excess client sample waste and waste that is generated while performing an array of analytical services, some of which are hazardous. These wastes must be disposed of in a manner that is safe, cost efficient and in accordance with hazardous waste regulations.

A. Wastes can be broken down into the following categories:

1. Unused portions of actual samples received from outside clients
   a. Unused aliquots of completed water samples
   b. Unused aliquots of completed non-aqueous samples
2. Soils from quarantined areas
3. All other soils, sediments, building debris, wipes, oils, etc.
4. Hazardous waste generated within the laboratory as part of numerous analytical procedures.

II. SUMMARY OF PROCEDURES:

A. There are four options for disposing of unused sample portions:

1. Return completed samples and any generated waste from these samples to the client
2. Disposal of samples after confirming that they are non-hazardous.
3. Disposal through a waste vendor in either a sealed drum or lab pack.
4. Treat the sample to make it non-hazardous and dispose of it as such. (Aqueous pH neutralization only.)

B. There are two options for disposing of laboratory generated waste:

1. Disposal through a waste vendor in either a sealed drum or lab pack. This is normally done twice a year. The waste must be stored properly until transported off site.
2. Treat the waste to make it non-hazardous and dispose of it as such. (Aqueous pH neutralization only.)

III. EQUIPMENT/APPARATUS:

A. Proper safety equipment should be in good working condition. This includes gloves, lab coats, safety glasses/goggles, and face shields. Voluntary use of cartridge respirators is allowed (see area manager or QAO).

B. USDOT approved drums for storing and shipping hazardous waste.

C. Fume hoods.

IV. PROCEDURE

Waste disposal is done under the management and coordination of the Sample Receiving Manager, Section Managers and the Safety Coordinator.

A. Disposal of completed aqueous samples:

Completed samples are kept in cold storage for a minimum of 45 days from receipt and sample extracts are held for 90 days minimum from receipt. Engineering support projects involving CLP work, litigation cases, etc. may be saved for longer than three weeks at the request of the project manager.

No samples should be disposed of without approval from the responsible area manager or analyst. **At this point, the area manager and/or analyst will communicate information about samples deemed as hazardous**.

1. The majority of the water samples (ground, surface and drinking) is non-hazardous and is disposed of by pouring them down the sink.
   a. This must be done under the hooded area located near the sink in sample receiving. Make sure that the sash is closed far enough to produce sufficient ventilation. The tap water should be turned on to supply copious wash for sample disposal.
   b. Proper safety equipment **must** be used including safety glasses (face shield if necessary), lab coat, and gloves.
   C. **Be alert to potential problems: for example, separate Cyanide waste from acid waste. Neutralize acid waste that will be poured down the drain and don't mix waste/samples thought to contain Cyanide with samples that are acidified. Also, look for things such as phase separation, odd color, odor, etc. Check with the area manager or Safety Coordinator before disposing of any questionable samples.**
   d. Tap water must be running when samples are poured out for approximately 10 minutes in order for sufficient flushing and dilution to take place.
   e. All containers must be rinsed out and thrown into the trash.
   f. All samples disposed of in this manner must be documented in the bound sample disposal logbook.

2. If water samples are hazardous (known or suspected), one of the following steps must be taken:
   a. Samples may be returned to the client. If you plan to ship the unused portion back to the client, check with shipping and receiving to make sure that the material can be shipped in accordance with USDOT regulations. **If the samples are not returned to the client they must be stored properly until picked up by a waste vendor.**

b. Treat the sample to make it non-hazardous. One example of this is if the sample is highly corrosive, the pH may be adjusted.
c. Store the sample properly until either a sealed drum or lab pack is sent out.
d. All samples disposed of in this manner must be documented in the bound sample disposal logbook.

B. Disposal of completed non-aqueous samples:

The majority of non-aqueous samples are soils and sediments. Although there may also be building debris, wipes, oils**,** and occasionally product type samples.

1. If samples are non-hazardous, they are placed in a sealed drum and destroyed. On specific projects we may also opt to return the unused portions to the client even if they are non-hazardous.
2. If non-aqueous samples are hazardous (known or suspected), one of the following steps must be taken.
   a. Samples may be returned to the client. If you plan to ship the unused portion back to the client, check with shipping and receiving to make sure that the material can be shipped in accordance with USDOT regulations**. If the samples are not returned to the client they must be stored properly until picked up by a waste vender.**
   b. Store the sample properly until a lab pack is sent out.
3. Soil samples taken at a depth of three feet or less from areas, which have been quarantined by the US Department of Agriculture (USDA), must first be treated at the laboratory to prevent the spread of any plant pests. The USDA has detailed proper treatment procedures of which we use the following:
   a. The sample is heated to 180°C (356°F) in a vented oven for two hours.
   b. After heating the samples they are removed from the oven to cool and then placed in a sealed drum and destroyed.
4. Once the samples have undergone treatment they can then be disposed of by one of the procedures for non-aqueous samples**. All samples disposed of in this manner must be documented in both the bound sample receiving disposal logbook, and soil quarantine logbook with the following information:**
   a. Client
   b. Work Order/Sample #s (from LIMS)
   c. Date(s) treated
   d. How much sample volume (in ounces) was treated

C. Disposal of laboratory generated waste:

Generated waste is stored outside the building until a waste pick up occurs. This area must be maintained properly.

1. Waste handling and disposal within each laboratory section:

NOTE: Each laboratory analyst and section manager is responsible in assuring that **handling** operations (within their area) are being followed according to the laboratory requirements.

a. General Chemistry/Inorganic

Each analyst performing specific laboratory tests that generates waste is responsible to handle and dispose of the waste in a safe manner and under the guidelines listed below. If you have any questions left unanswered regarding waste disposal within your specific area contact the inorganic manager or the safety coordinator.

- Concentrated acid waste, **(>2% by volume) and** dilute mercury waste (mercury, chemical oxygen demand, total kjeldahl nitrogen and chloride analyses waste) are poured into the Acid Satellite Waste drum located outside the back of the building inside the caged fence. **Document the type and amount of waste in the acid waste logbook, then initial and date the entry**.
- Dilute acid waste **(<2% by volume or less)** are neutralized by using concentrated amounts of sodium hydroxide. Once the pH of the acid waste is neutralized, the acid waste is then poured down a sink drain within hooded ventilation with copious amounts of tap water. The amounts of acid waste treated, the amount of sodium hydroxide used to neutralize the acid waste, final pH of the acid waste, date performed, and date disposed of is then recorded into an acid waste neutralization log book that is kept in sample receiving.
- **All other non-hazardous sample waste, reagents, and standards are poured down the drain with copious amounts of tap water.**

b. Metals

Each analyst performing specific laboratory tests that generates waste is responsible to handle and dispose of the waste in a safe manner and under the guidelines listed below. If you have any questions left unanswered regarding waste disposal within your specific area contact the inorganic manager or the safety coordinator.

- Concentrated acid waste, aqueous sample waste digestates, and old unused calibration standards **(>2% by volume)** are poured into the Acid Satellite Waste drum located outside the back of the building inside the caged fence. **Document the type and**

amount of waste in the acid waste logbook, then initial and date the entry

- Non-aqueous sample digestate wastes are decanted off the soil/solid samples into the Acid Satellite Waste drum located outside the back of the building inside the caged fence. **Document the type and amount of waste in the acid waste logbook, then initial and date the entry**
- **Throw the soil/solids in the trash once the acid has been rinsed free**.
- **Cr6 digestates as with all concentrated metal/acid waste are poured into the Acid Satellite Waste drum. Document the type and amount of waste in the acid waste logbook, then initial and date the entry**

****Note: The laboratory '*Acid Waste Logbook*' is located in Extractions.**

c. Organic Extraction Laboratory Area

Each analyst performing specific laboratory tests that generates waste is responsible to handle and dispose of the waste in a safe manner and under the guidelines listed below. If you have any questions left unanswered regarding waste disposal within your specific area contact the organic manager or the coordinator.

- Concentrated acid waste is discarded into the Acid Satellite Waste located outside the back of the building inside the caged fence.
- Non-chlorinated solvent waste (Acetone, Ether, Hexane, and Methanol ….etc…) is poured into the Non-Chlorinated Waste labeled bottle located in the hood in the Organic Extraction Laboratory.
- Chlorinated solvent waste (Methylene Chloride, Chloroform, chlorinated standard and spike waste) is poured into the Chlorinated Waste labeled bottle located in the hood in the Organic Extraction Laboratory.

****Note: Laboratory generated solvent waste is transferred to the appropriate Satellite Solvent Waste Drum (chlorinated or non-chlorinated) weekly or as deemed necessary. Disposal of solvent waste is done under the direction of the organic laboratory manager. These drums are**

located outside the back of the building inside the caged fence and only authorized laboratory staff are allowed to add waste solvent to these drums. The date of addition to the drum, type, and quantity of solvent is entered into the '*Organic Solvent Waste Logbook*' located in Extractions.

- **Aqueous sample waste from extracted samples (once the extraction solvent has been removed) is poured down the drain and flush with copious amount of tap water.**
- Sodium sulfate waste is dumped into a waste container under an extraction laboratory hood and left overnight or until evaporated. Then the waste is discarded into the trash.

d. Gas Chromatography (GC)/High Performance Liquid Chromatography (HPLC) Laboratory:

- Autosampler vials are discarded into the appropriate buckets located in the GC/HPLC Laboratory.
- Sample and spike extract vials are separated according to the contents in the vial. **Acid cleaned extracts** are combined into a separatory funnel and the acid layer separated from the solvent. The acid portion is discarded into the Acid Satellite Waste drum located outside the back of the building inside the caged fence. The solvent waste is discarded into the appropriate solvent waste bottle (chlorinated/non-chlorinated waste) located in the hood in the organic extraction laboratory and then transferred to the appropriate satellite drum when deemed necessary. **Document the type and amount of waste into the appropriate logbook, then initial and date the entry.**
- **Unused stock and working standards** are discarded into the chlorinated solvent waste bottle located in the organic extraction laboratory. The empty vials are rinsed several times with solvent, and the solvent rinsate poured into the solvent waste bottle. Then the vials are discarded into the glassware waste container.

e. Gas Chromatography/Mass Spectrometry

- **Volatile sample, standard, and reagent waste:**

Instrument Waste - Aqueous sample waste is collected in waste bottles via waste lines from the instrument. The bottles are emptied into buckets and poured down the drain (pH is < 2% by volume). A small amount of methanol used to clean glassware is also dumped into the bucket and poured down the drain. While disposing of sample waste always run the cold tap water 10-15 minutes. Non-aqueous waste from sample analyses is retained and disposed of in the same manner as the unused sample. Unused sample is held for sample disposal by the sample receiving area (see A and B listed above). Lachat instrument waste and COD waste is collected and poured into the acid satellite drum when deemed necessary. **Document the type and amount of waste in the acid waste logbook, then initial and date the entry.**

Standards - Unused stock and working standards are discarded into the chlorinated solvent waste bottle in the hood located in extractions. The empty vials are rinsed several times with solvent, and the solvent rinsate poured into the solvent waste bottle. Then the vials are discarded into the glassware waste container.

In conjunction with section managers, the sample receiving area disposes of solid sample waste, unused aqueous and unused solid samples (see procedures A and B listed above).

- **Semi-volatile sample and standard waste disposal:**

Methylene chloride waste solvent and standard waste in vials are poured into the chlorinated waste bottle in the hood in extractions. The empty vials are rinsed several times with solvent, and the solvent rinsate poured into the solvent waste bottle. Then the vials are discarded into the glassware waste container.

Auto sampler vials are collected in buckets, and then either consolidated in lab packs or the contents are transferred into the appropriate waste drums.

Lab packs for disposal are done by a licensed waste disposal company.

f. Bioassay Laboratory

- Aqueous sample waste and a small amount of methanol are poured down the drain with copious amounts of tap water. Larger amounts of methanol used for glassware cleaning are collected in beakers and evaporated at room temperature.
- Hazardous or product samples are returned to the client.

D. Consolidation of satellite waste for contractor disposal:

In conjunction with the Safety Coordinator, the sample receiving supervisor is responsible to coordinate waste disposal operations with outside waste disposal contractors.

1. Solvent waste from the areas discussed above is periodically consolidated into two drums located outside the back of the building inside the caged fence. A drum designated either chlorinated or non-chlorinated solvent waste is available to receive the appropriate solvent waste. When the drums become full (fluid surface six inches below the top of the drum), an authorized hazardous waste contractor will be scheduled to remove them to proper waste disposal.
2. The Acid Satellite Waste drum is also disposed through the authorized hazardous waste contractor once the drum is full to the level of six inches below the top of the drum.
3. Consolidated autosampler and standard vials are periodically Lab-Packed in drums and disposed through the authorized hazardous waste contractor.
4. The Safety Coordinator will administer the Waste Disposal Program and maintain current information to track quantities of waste generated and stored on-site.

   It is the continuous objective of our laboratory to find ways to decrease the amount of waste generated.

APPENDIX C

DQO Meeting Report

DQO Meeting Report
For Development
Of
SAP for SWMU 26 – Highway 58 Dump Site B

Date of Meeting: December 16, 2010 (via Telecom)

Meeting: Location: Environmental Office, NSA Crane; Crane, IN and other locations

Attendees/Locations: Tom Brent, Crane Environmental / NSA Crane
Ralph Basinski, Tetra Tech / NSA Crane
Joe Lucas, Tetra Tech / NSA Crane
Doug Griffin, IDEM / IDEM office - Indianapolis, IN
Tony Klimek, Tetra Tech – Tetra Tech office – Cincinnati, OH

Report prepared by: Tony Klimek - 513-557-5057, prepared: December 20, 2010

Tetra Tech presented background information about SWMU 26 and there was a general discussion about the proposed sampling. Some of the specific issues discussed were as follows:

1. History and background information about the site:
    - All debris from the dump site has been removed. The USEPA has approved NFA for the soils at the site
    - There are nine existing groundwater monitoring wells at the site; three in the upper water bearing zone and six in the lower water bearing zone.
    - There is a shale layer between the upper and lower water-bearing zones. This shale layer is a barrier that could prevent contamination (if present) in the upper water-bearing zone from entering the lower water-bearing zone
    - There are no existing monitoring wells in the upper water-bearing zone southeast of the former dump site.
    - The figures for the SAP include drawings and cross-sections that summarize the boring log information and geologic data.
    - There is no sampling and analysis data from the existing wells.
2. There was a discussion regarding the name of the type of shale layer between the water bearing zones. Note: It is not part was part of the Devonian Shale.
3. The initial RFI sampling will include: 1)installation of one additional groundwater monitoring well in the upper water-bearing zone southeast of the site, and 2) one round sampling in the four wells (three existing and one new one) in the upper water-bearing zone. Existing wells in the upper water-bearing zone repaired as necessary. Based on initial results, additional sampling and analysis may be performed, or site may proceed to NFA.
4. Initial groundwater samples will be analyzed for VOCs, SVOCs, and metals
5. Tetra Tech will submit the draft SAP for simultaneous review to both the Navy Crane and the Navy Chemist.

APPENDIX D- BACKGROUND DOCUMENTS

Groundwater Monitoring Well Construction Diagrams
Boring Logs of Groundwater Monitoring Wells

SWMU 26 – GROUNDWATER MONITORING WELL INFORMATION

SWMU 26 – Groundwater Monitoring Well Construction Diagrams
SWMU 26 – Boring Logs of Groundwater Monitoring Wells

Note: When the nine existing wells at SWMU 26 were installed in 1981, the site was designated Site 8 and the wells were identified as “WES-8-1-81” to “WES-8-9-81”. The monitoring wells have been renamed to conform to current NSA Crane standards and have been renumbered 26MW01 to 26MW09. The construction diagrams and boring logs presented on the following pages are based on the original 1981 numbering system. The actual well number (1 to 9) remains the same for each well: WES-8-1-81 is 26MW01 (1); WES-8-2-81 is 26MW02 (2); etc.

GROUNDWATER MONITORING WELL CONSTRUCTION DIAGRAMS

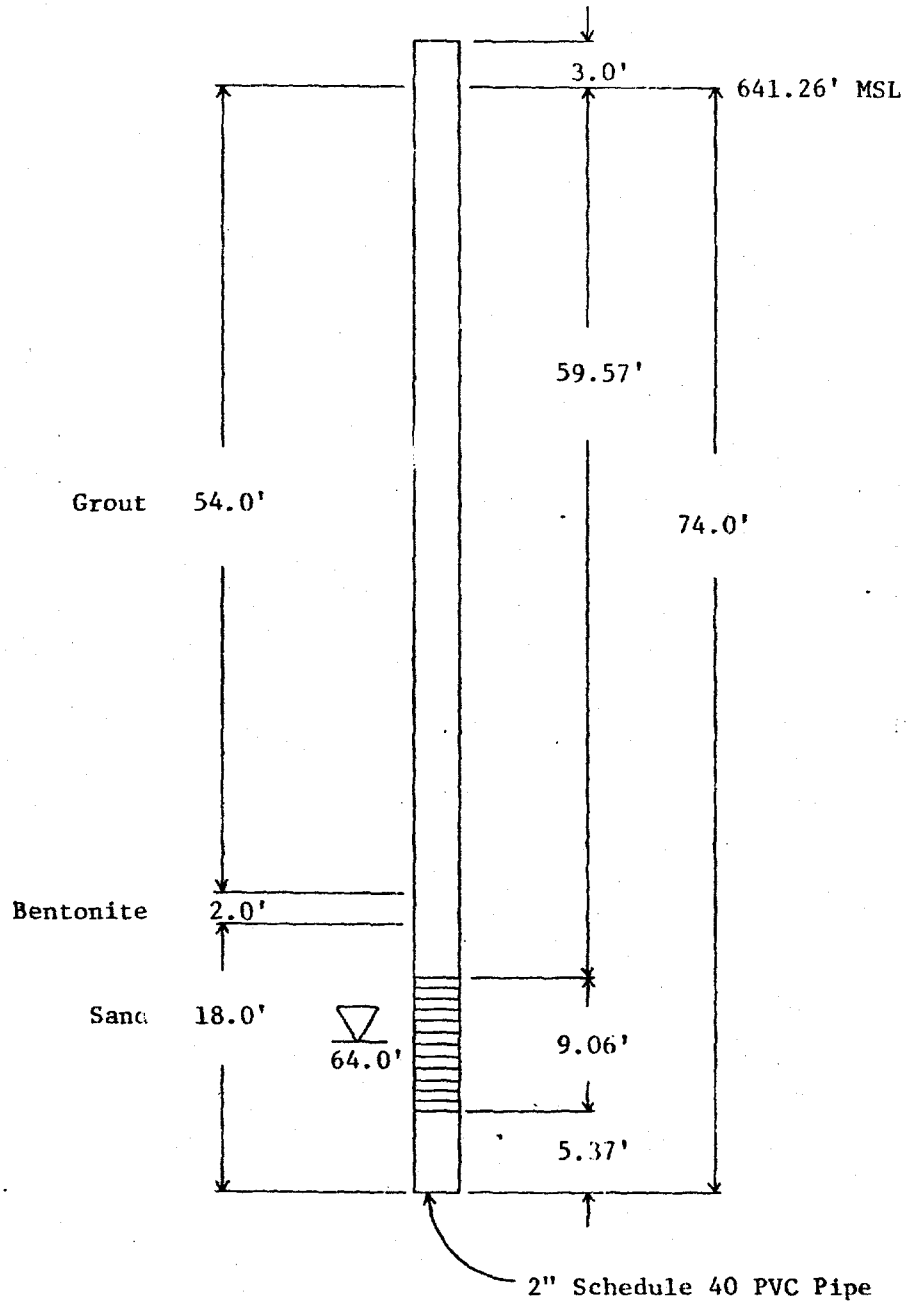

Well screen

Water depth at time of drilling

NWSC, Crane, Indiana
Highway 58 Dump Site B
Well Completion
Boring Number: WES-8-1-81

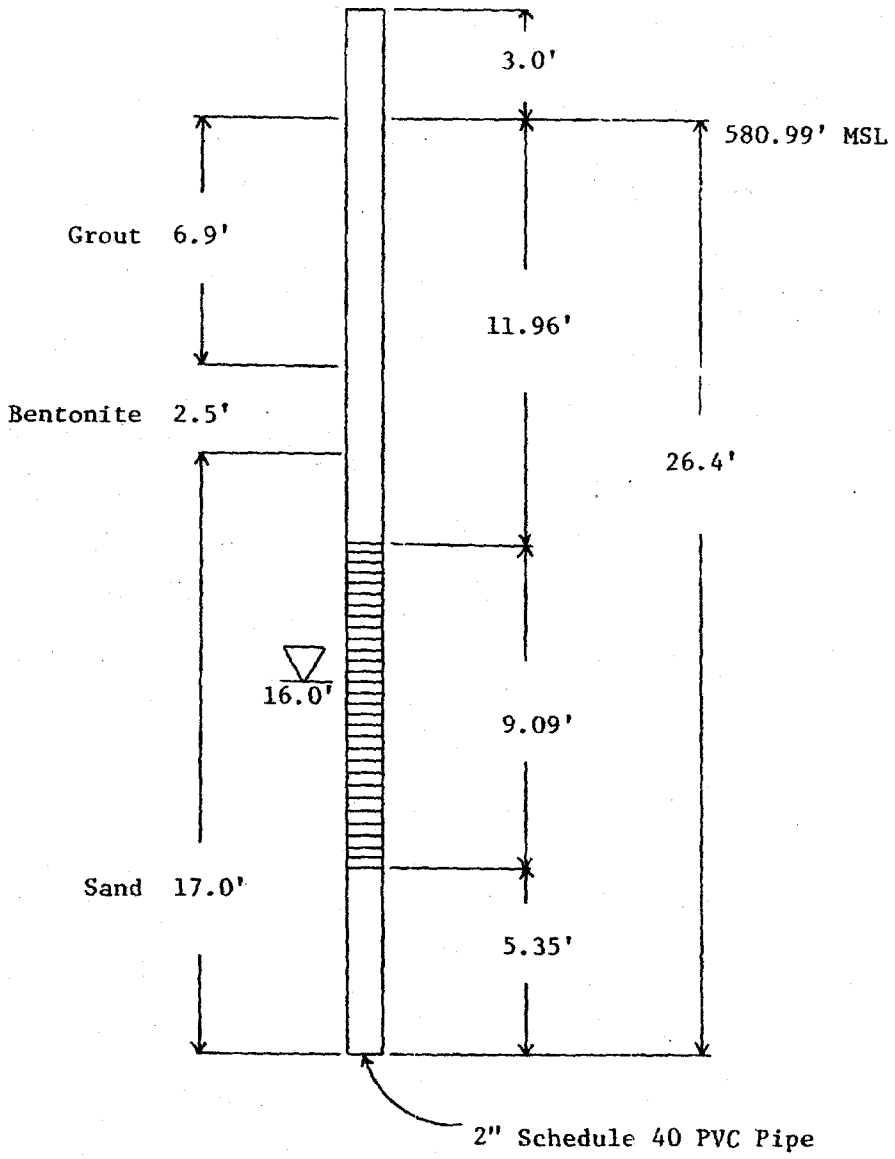

Well screen

Water depth at time of drilling

NWSC, Crane, Indiana
Highway 58 Dump Site B
Well Completion
Boring Number: WES-8-2-81

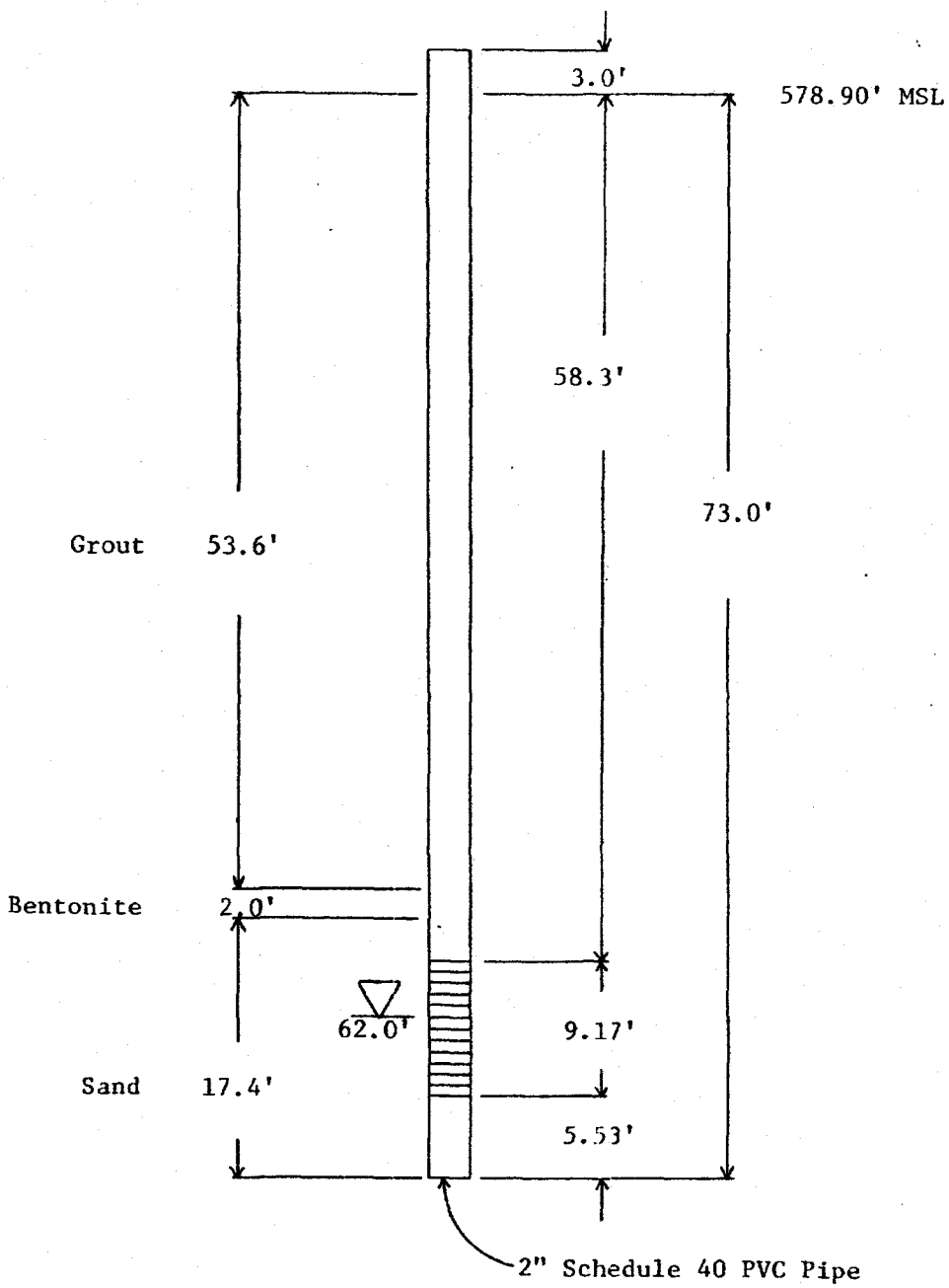

Well screen

Water depth at time of drilling

NWSC, Crane, Indiana
Highway 58 Dump Site B
Well Completion
Boring Number: WES-8-3-81

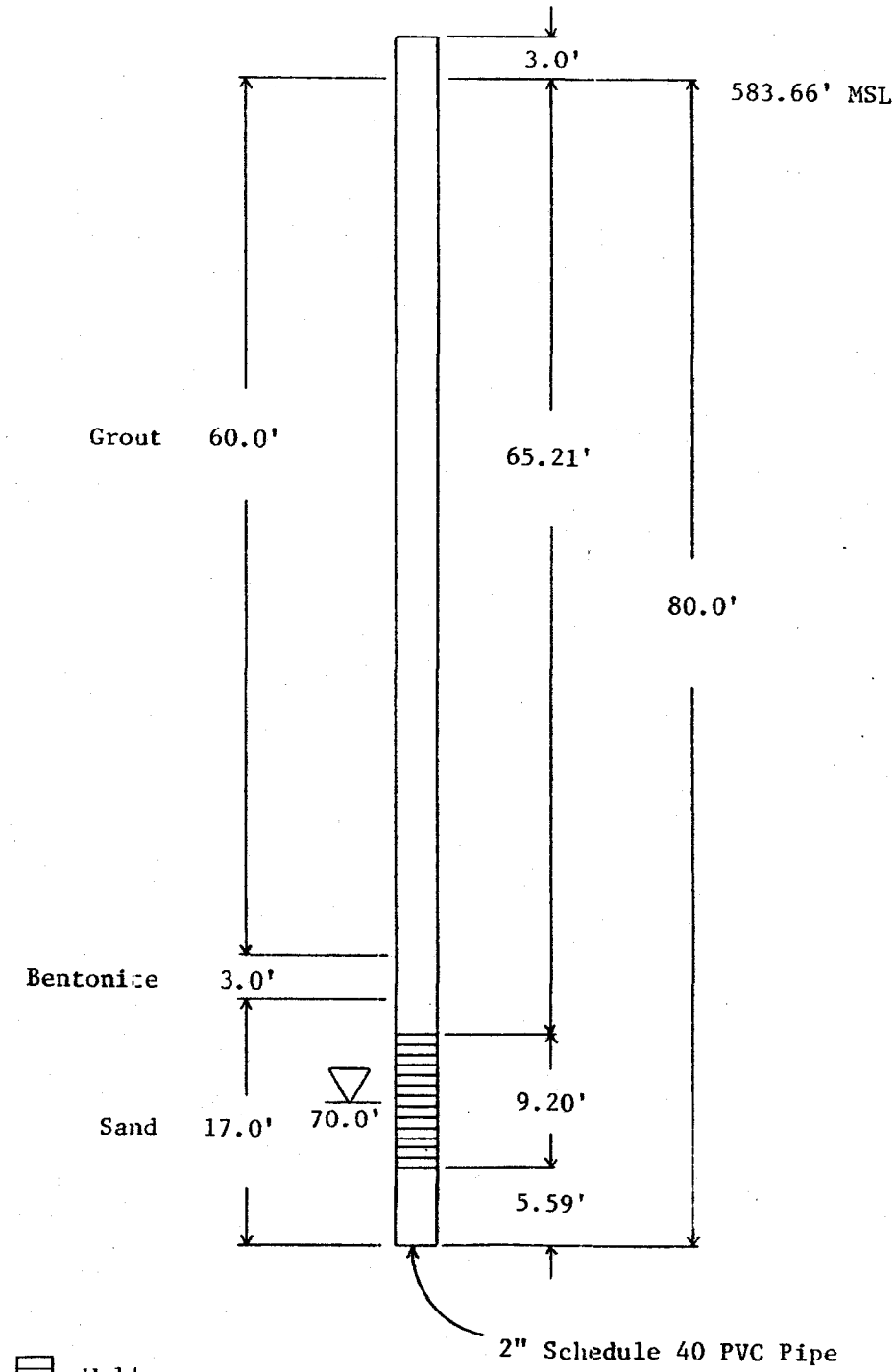

Well screen

Water depth at time of drilling

NWSC, Crane, Indiana
Highway 58 Dump Site B
Well Completion
Boring Number: WES-8-4-81

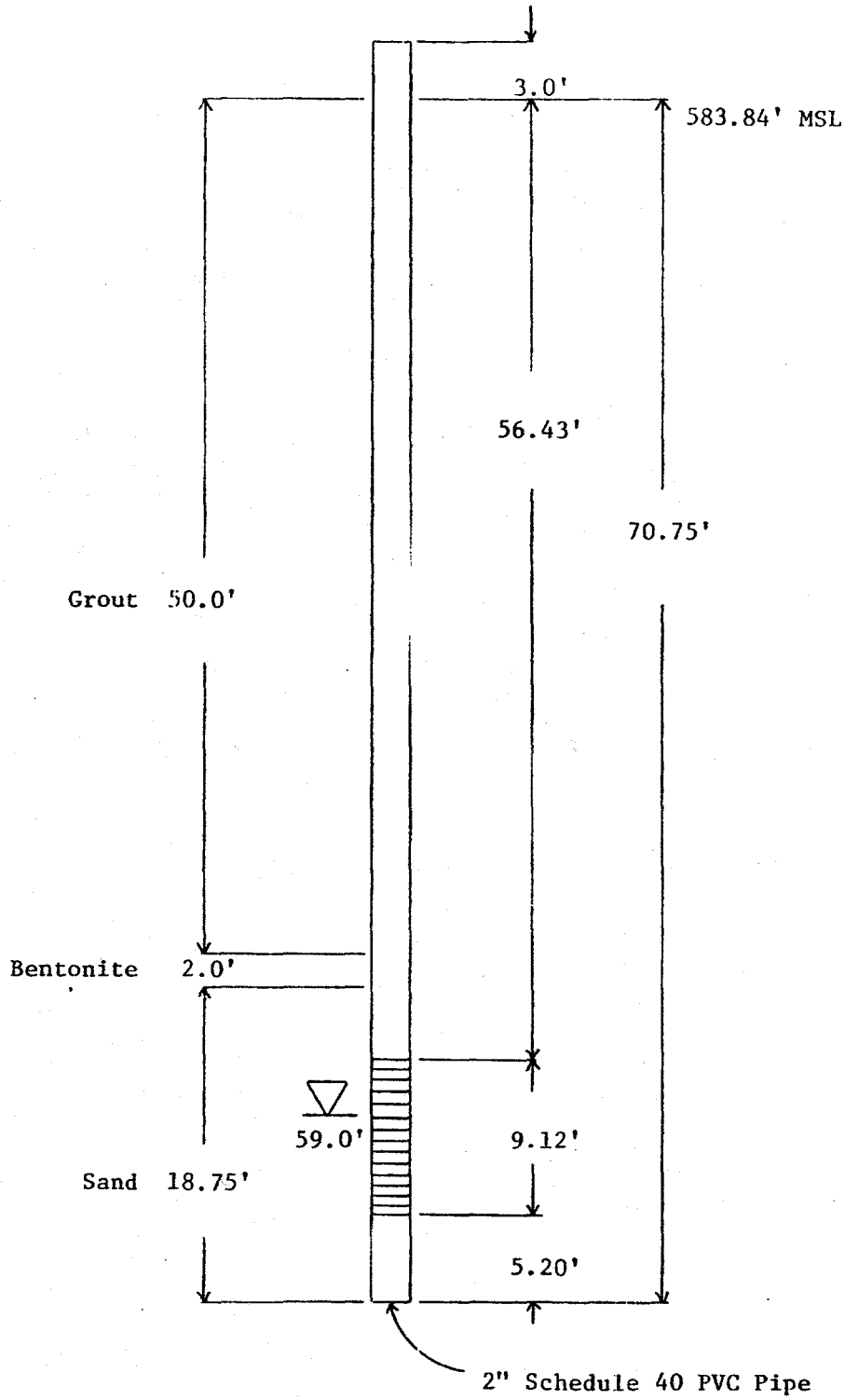

Well screen

Water depth at time of drilling

NWSC, Crane, Indiana
Highway 58 Dump Site B
Well Completion
Boring Number: WES-8-5-81

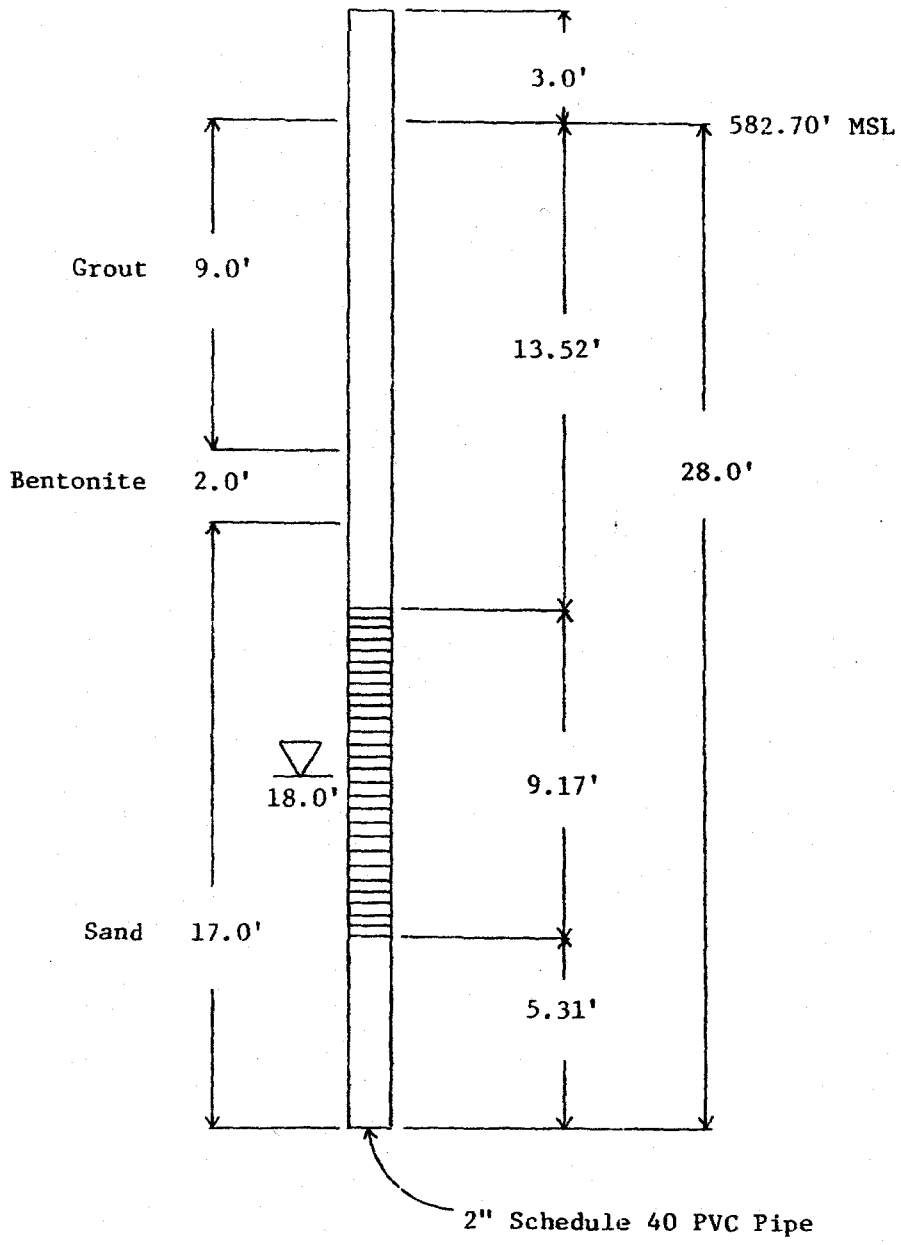

Well screen

Water depth at time of drilling

NWSC, Crane, Indiana
Highway 58 Dump Site B
Well Completion
Boring Number: WES-8-6-81

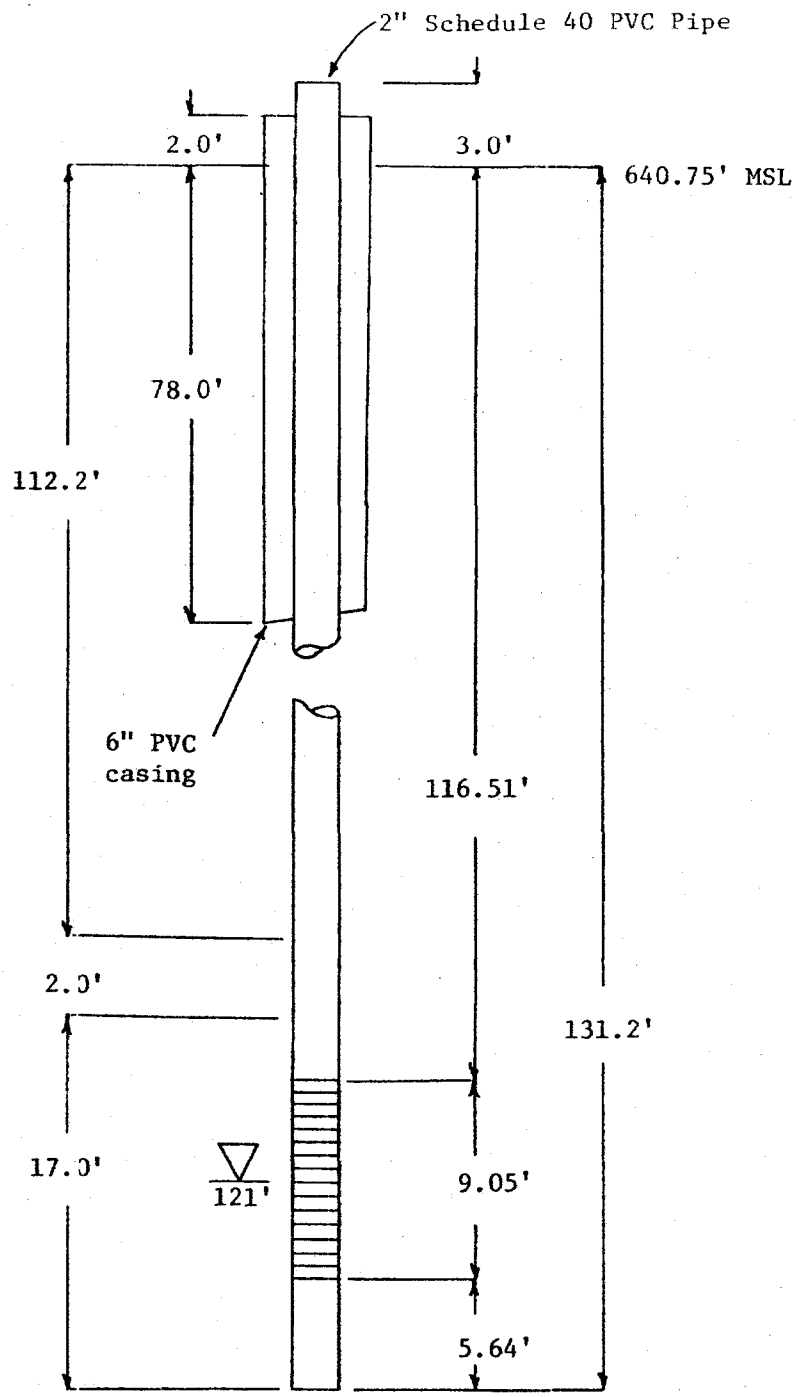

Water depth at time of drilling

Well screen

NWSC, Crane, Indiana
Highway 58 Dump Site B
Well Completion
Boring Number: WES-8-7-81

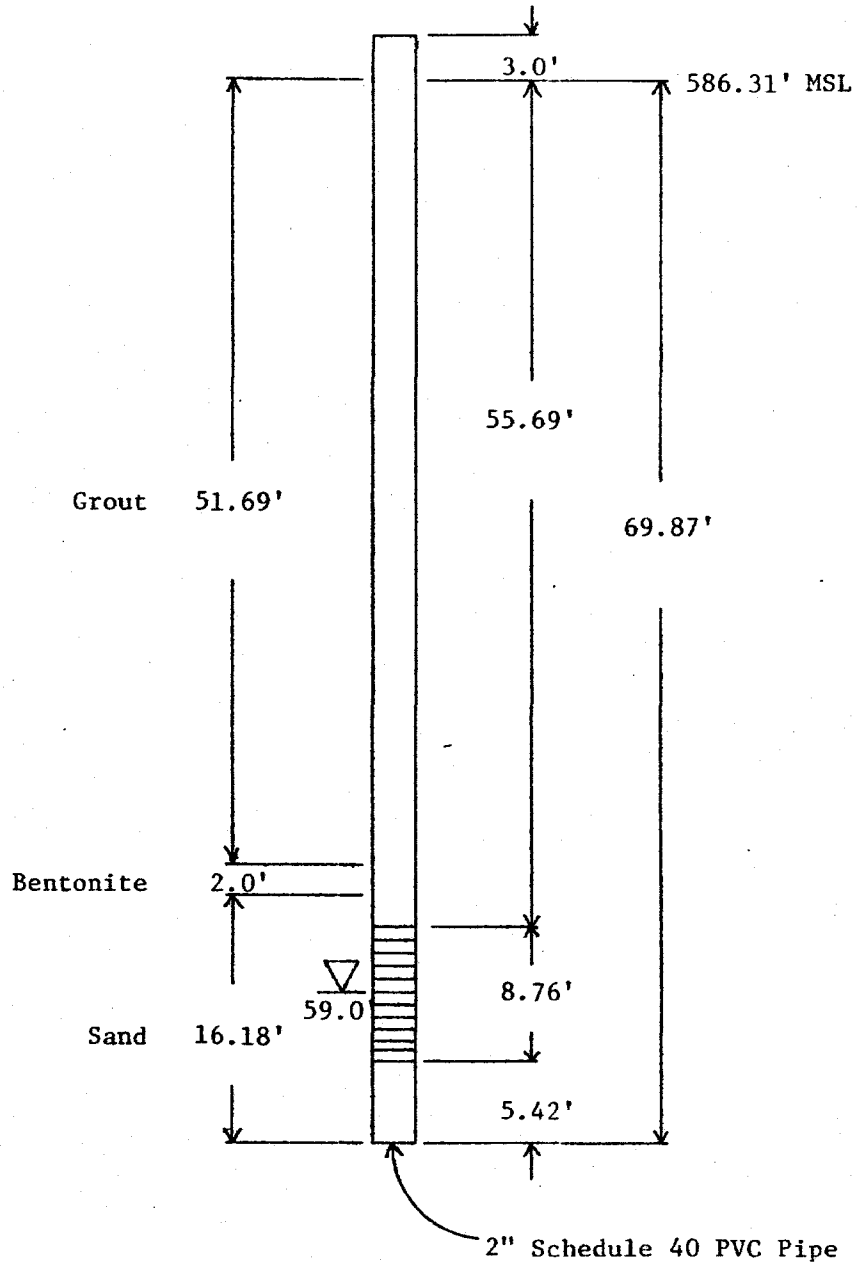

Well screen

Water depth at time of drilling

NWSC, Crane, Indiana
Highway 58 Dump Site B
Well Completion
Boring Number: WES-8-8-81

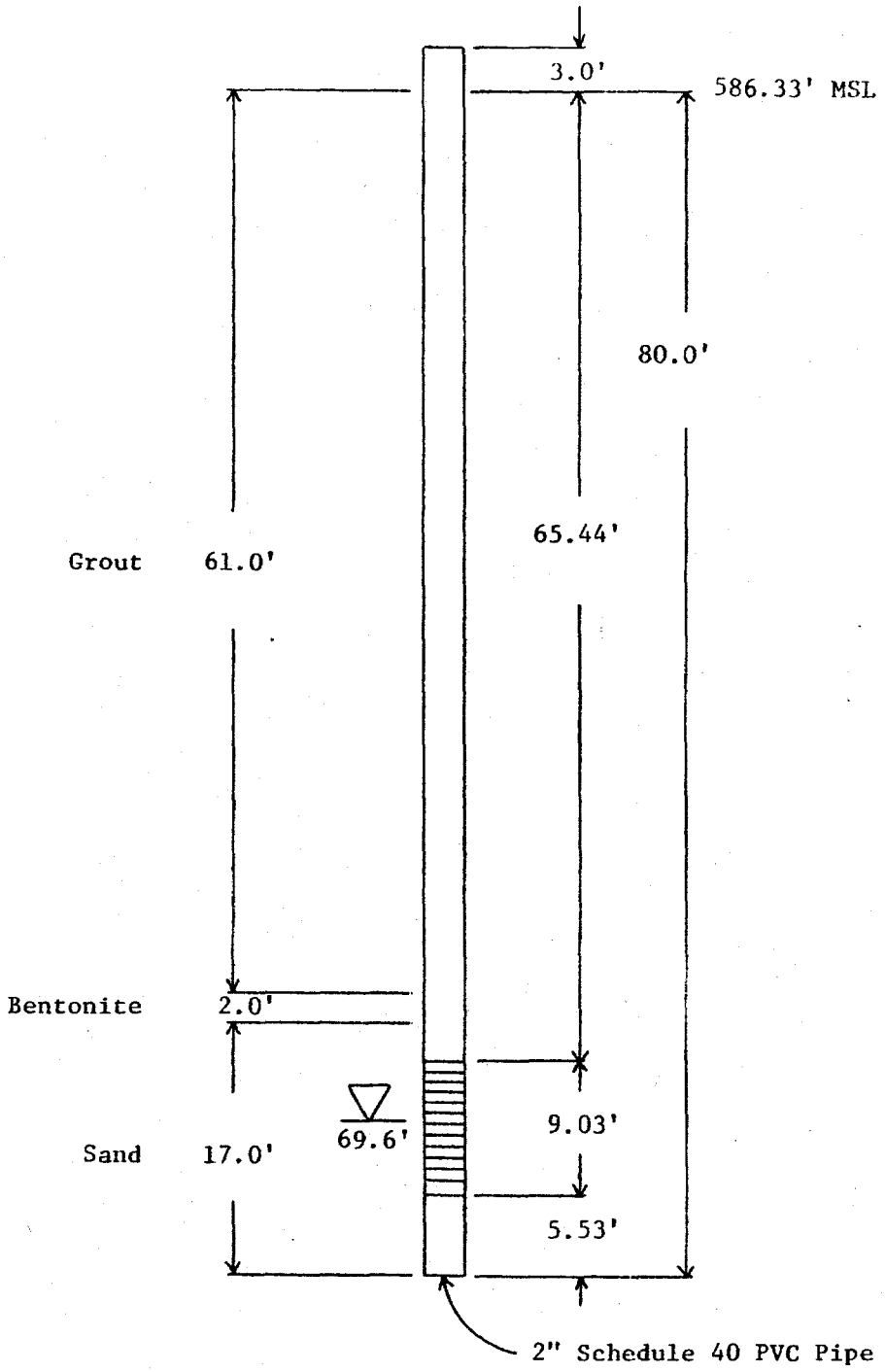

Well screen

Water depth at time of drilling

NWSC, Crane, Indiana
Highway 58 Dump Site B
Well Completion
Boring Number: WES-8-9-81

BORING LOGS OF GROUNDWATER MONITORING WELLS

BORING LOG
FIELD DATA

Project NWSC Groundwater Study Site Crane, IN Date 24 Oct. 1981
Location Highway 58 Dump Site B Job No. 441-G150.11GR21/22
Drill Rig Failing Inspector J. Dunbar Operator D. Taylor Surface El 641.26 Boring No. WES-8-1-81

SAMPLE NUMBER	DATE TAKEN 1981	STRATUM FROM	STRATUM TO	DRIVE FROM	DRIVE TO	SAMPLE FROM	SAMPLE TO	TYPE OF SAMPLER	Hyd. Press	Cont	CLASSIFICATION AND REMARKS
1A	24Oct	0.0	1.5	0.0	0.5	0.0	0.7	3" Shelby Tube	50	Jar	Sandy clay (CL): brown in color,
				0.5	1.0				500		dry, and contains fine to coarse
				1.0	1.5				700		grained sand.
	24Oct	1.5	18.3	0.0	35.0	—	—	5 5/8" Rock	Bit	—	Sandstone: horizontal cracks at
											3.3, 7.5, and 8.3 ft. Sandstone
											is brown, soft, and weathered to
											8.3 ft, moderately hard after 8.3 ft.
		18.3	19.2								Clay shale: soft and grey
		19.2	23.3								Limestone: very hard and light grey
		23.3	24.7								Shale: brown and soft
		24.7	31.6								Sandstone: brown to 27.3 ft and
											light grey to 31.6 ft
		31.6	32.0								Shale: dark grey and soft
		32.0	34.3								Limestone: light grey and hard
		34.3	35.0								Shale: brown
	26Oct	35.0	37.7	35.0	68.0	—	—	5 5/8" Rock	Bit	—	Limestone: light grey and hard

WES FORM JAN 74 819 EDITION OF NOV 1971 MAY BE USED

BORING LOG
FIELD DATA

Project _____ Site _____ Date _____
Location _____ Job No. _____
Drill Rig _____ Inspector _____ Operator _____ Surface El _____ Boring No. WES-8-1-81

SAMPLE NUMBER	DATE TAKEN 1981	STRATUM FROM	STRATUM TO	DRIVE FROM	DRIVE TO	SAMPLE FROM	SAMPLE TO	TYPE OF SAMPLER			CLASSIFICATION AND REMARKS
		37.7	38.3								Shale: brown
		38.3	44.2								Limestone; light grey and hard
		44.2	45.0								Sandstone: grey, soft, and clayey
		45.0	54.3								Limestone: grey and hard
		54.3	56.3								Shale: dark grey and soft
		56.3	57.5								Sandstone: grey and medium hard
		57.5	59.3								Clay: brown, soft, and damp
		59.3	65.5								Shale: hard and grey
		65.5	67.3								Sandstone: brown
		67.3	71.6								Limestone
	27Oct	71.6	74.0	6.8	74.0	—	—	5 5/8" Rock	Bit	—	Shale
											Water level at 9:14 on 27 Oct, 1981
											was at 63.95 ft. Drilled 10 ft
											below and installed well.

WES FORM JAN 74 819 EDITION OF NOV 1971 MAY BE USED

Sheet 2 of 2 Sheets

BORING LOG
FIELD DATA

Project NWSC Groundwater Study Site Crane, IN Date 20 Oct. 1981
Location Highway 58 Dump Site B Job No. 441-G150.11GR21/22
Drill Rig Failing Inspector J. Dunbar Operator D. Taylor Surface El 580.99 Boring No. WES-8-2-81

SAMPLE NUMBER	DATE TAKEN 1981	STRATUM FROM	STRATUM TO	DRIVE FROM	DRIVE TO	SAMPLE FROM	SAMPLE TO	TYPE OF SAMPLER	Hyd. Press	Cont	CLASSIFICATION AND REMARKS
	20 Oct	0.0		0.0	0.5	—	—	3" Shelby Tube	—	—	No sample: clay (CL), boulders,
				0.5	1.0						and cobbles. Hydrallic guage is
				1.0	1.5						broken.
				1.5	1.7						
				0.0	3.2	—	—	7" Solid Auger		—	Clay with sandstone cobbles and
											boulders.
	20 Oct			3.2	4.8	—	—	5 5/8" Rock Bit		—	Made room for 4-5-1/2 in. core
											barrel.
	20 Oct		4.2	4.8	9.8	—	—	4 x 5 1/2"Core Barrel			No sample-clay shale: yellow
		4.2									brown in color and highly weathered.
	20 Oct			9.8	11.4	—	—	4 x 5 1/2"Core Barrel			No sample-clay shale: same-cored
											with low hyd. and low air press.

WES FORM JAN 74 819 EDITION OF NOV 1971 MAY BE USED

Sheet 1 of 5 Sheets

BORING LOG
FIELD DATA

Project _____ Site _____ Date _____
Location _____ Job No. _____
Drill Rig _____ Inspector _____ Operator _____ Surface El _____ Boring No. WES-8-2-81

SAMPLE NUMBER	DATE TAKEN	STRATUM FROM	STRATUM TO	DRIVE FROM	DRIVE TO	SAMPLE FROM	SAMPLE TO	TYPE OF SAMPLER	Hyd. Press		CLASSIFICATION AND REMARKS
	20Oct	13.4	15.5	13.4	15.9	13.4	15.9	5" Dennison	Barrel		Shale: highly weathered, brittle,
											soft, and light brown to brown
											in color-partial recovery
		15.5									Shale: brittle, soft, weathered,
											and dark grey to brownish grey.
	20Oct			15.9	17.0	15.9	17.0	5" Dennison	Barrel		Shale: dark grey and oxidized.
											Water at 16 ft.
	21Oct			17.0	17.5	17.0	18.7	3"Fixed Pis- Sampler	240		Shale: dark grey, brittle, soft,
				17.5	18.0				300		weathered, and oxidized. Water
				18.0	18.5				420		marks visible from iron staining
				18.5	18.7				500		on core.
	21Oct			18.7	2.12	18.7	21.2	5" Dennison	Barrel		Shale: dark black and no oxidation.

WES FORM JAN 74 819 EDITION OF NOV 1971 MAY BE USED

Sheet 2 of 5 Sheets

BORING LOG
FIELD DATA

Project _____ Site _____ Date _____
Location _____ Job No. _____
Drill Rig _____ Inspector _____ Operator _____ Surface El _____ Boring No. WES-8-2-81

SAMPLE NUMBER	DATE TAKEN	STRATUM FROM	STRATUM TO	DRIVE FROM	DRIVE TO	SAMPLE FROM	SAMPLE TO	TYPE OF SAMPLER			CLASSIFICATION AND REMARKS
	21Oct			21.2	23.7	21.2	23.7	Dennison Barrel			Shale: dark greenish grey, soft,
											uniform and brittle.
	21Oct			23.7	26.2	23.7	26.2	Dennison Barrel			Shale: same
											oxidized from 24.2 to 24.5 ft and
											25.0 to 25.2 ft.
											Blew hole dry and installed well.

WES FORM JAN 74 819 EDITION OF NOV 1971 MAY BE USED

Sheet 3 of 5 Sheets

Hole No. WES-8-2-81

DRILLING LOG	DIVISION U.S. Navy	INSTALLATION Crane, IN	SHEET 4 OF 5 SHEETS

1. PROJECT NWSC Groundwater Study	10. SIZE AND TYPE OF BIT –
2. LOCATION (Coordinates or Station) Highway 58 Dump Site B	11. DATUM FOR ELEVATION SHOWN (TBM or MSL) MSL
3. DRILLING AGENCY CEWES	12. MANUFACTURER'S DESIGNATION OF DRILL Failing 1500
4. HOLE NO. (As shown on drawing title and file number) WES-8-2-81	13. TOTAL NO. OF OVER-BURDEN SAMPLES TAKEN: DISTURBED zero; UNDISTURBED seven
5. NAME OF DRILLER D. Taylor	14. TOTAL NUMBER CORE BOXES zero
6. DIRECTION OF HOLE ☒ VERTICAL ☐ INCLINED ____ DEG. FROM VERT.	15. ELEVATION GROUND WATER
	16. DATE HOLE: STARTED 20 Oct. 1981; COMPLETED 21 Oct. 1981
7. THICKNESS OF OVERBURDEN 0.0	17. ELEVATION TOP OF HOLE 58099
8. DEPTH DRILLED INTO ROCK 26.2 ft	18. TOTAL CORE RECOVERY FOR BORING – %
9. TOTAL DEPTH OF HOLE 26.2 ft	19. SIGNATURE OF INSPECTOR [illegible]

ELEVATION a	DEPTH b	LEGEND c	CLASSIFICATION OF MATERIALS (Description) d	% CORE RECOVERY e	BOX OR SAMPLE NO. f	REMARKS (Drilling time, water loss, depth of weathering, etc., if significant) g
567.99	13.0		Partial recovery of shale; very weathered, brittle, and fractured			
566.99	14.0		fractured			Dennison Barrel
			Shale: light brown to brown in color, highly weathered, brittle, and soft			
565.99	15.0					
			Shale: dark grey to brownish grey, oxidized, brittle, and soft.			
564.99	16.0		fractured			Dennison Barrel Encountered water at 16 ft
			Shale: dark grey and oxidized			21 Oct. 81
563.99	17.0					Water overnight to 15 ft
562.99	81.0		Shale: dark grey, brittle, soft, and oxidized. Water marks visible from iron staining on core.			Fixed Piston Sampler
561.99	18.0		fractured			Dennison Barrel
560.99	20.0		Shale: dark grey to black, soft, and very brittle.			
559.99	21.0					
558.99	22.0		Shale: dark greenish grey, soft, uniform, and brittle.			Dennison Barrel
557.99	23.0					

ENG FORM 1836 MAR 71 PREVIOUS EDITIONS ARE OBSOLETE. (TRANSLUCENT)

PROJECT | HOLE NO.

Hole No. WES-8-2-81

DRILLING LOG	DIVISION	INSTALLATION	SHEET 5 OF 5 SHEETS

1. PROJECT	10. SIZE AND TYPE OF BIT
2. LOCATION (Coordinates or Station)	11. DATUM FOR ELEVATION SHOWN (TBM or MSL)
3. DRILLING AGENCY	12. MANUFACTURER'S DESIGNATION OF DRILL
4. HOLE NO. (As shown on drawing title and file number)	13. TOTAL NO. OF OVER-BURDEN SAMPLES TAKEN — DISTURBED — UNDISTURBED
5. NAME OF DRILLER	14. TOTAL NUMBER CORE BOXES
6. DIRECTION OF HOLE ☐ VERTICAL ☐ INCLINED ____ DEG. FROM VERT.	15. ELEVATION GROUND WATER
7. THICKNESS OF OVERBURDEN	16. DATE HOLE — STARTED — COMPLETED
8. DEPTH DRILLED INTO ROCK	17. ELEVATION TOP OF HOLE
9. TOTAL DEPTH OF HOLE	18. TOTAL CORE RECOVERY FOR BORING %
	19. SIGNATURE OF INSPECTOR

ELEVATION a	DEPTH b	LEGEND c	CLASSIFICATION OF MATERIALS (Description) d	% CORE RECOVERY e	BOX OR SAMPLE NO. f	REMARKS (Drilling time, water loss, depth of weathering, etc., if significant) g
557.99	23.0					
556.99	24.0		oxidized			Dennison Barrel
555.99	25.0		oxidized			
554.99	26.0		Shale: dark greenish grey, soft, uniform, and brittle.			
			Machine breaks to 23.7 ft. Natural break from 23.7			

ENG FORM 1836 MAR 71 PREVIOUS EDITIONS ARE OBSOLETE. (TRANSLUCENT)

PROJECT | HOLE NO.

BORING LOG
FIELD DATA

Project NWSC Groundwater Study Site Crane, IN Date 22 Oct. 1981
Location Highway 58 Dump Site B Job No. 441-G150.11GR21/22
Drill Rig Failing Inspector J. Dunbar Operator D. Taylor Surface El 578.90 Boring No. WES 8-3-81

SAMPLE NUMBER	DATE TAKEN 1981	STRATUM FROM	STRATUM TO	DRIVE FROM	DRIVE TO	SAMPLE FROM	SAMPLE TO	TYPE OF SAMPLER	Hyd. Press	Cont	CLASSIFICATION AND REMARKS
	22 Oct	0.0		0.0	2.5	—	—	3" Shelby Tube		—	No sample-push bent tube-clay (CL),
											cobbles, and boulders.
			5.3	0.0	5.5	—	—	7" Solid Auger		—	Cleanout: clay, cobbles, and
											boulders.
		5.3	8.0	5.5	35.0	—	—	5 5/8" Rock Bit		—	Shale: brown, weathered, and soft.
		8.0	14.3								Shale: dark grey and medium hard
		14.3	23.0								Shale: light grey and medium hard
		23.0	26.3								Limestone: grey and hard
		26.3	27.5								Shale: light grey and medium hard
		27.5	31.3								Shale: brown
		31.3	35.0								Sandstone: brown and medium hard.
											Let hole sit overnight-no water
											on 23 Oct. 1981.

WES FORM JAN 74 819 EDITION OF NOV 1971 MAY BE USED

BORING LOG
FIELD DATA

Project _____ Site _____ Date _____
Location _____ Job No. _____
Drill Rig _____ Inspector _____ Operator _____ Surface El _____ Boring No. WES-8-3-81

SAMPLE NUMBER	DATE TAKEN 1981	STRATUM FROM	STRATUM TO	DRIVE FROM	DRIVE TO	SAMPLE FROM	SAMPLE TO	TYPE OF SAMPLER			CLASSIFICATION AND REMARKS
	23Oct	35.0	61.0	35.0	73.0	—	—	5 5/8" Rock	Bit	—	Sandstone: brown and medium hard.
		61.0	62.1								Shale: dark grey and water
		62.1	73.0								Limestone: grey and hard.
											Blew hole and installed well.
											Water coming in very slowly.

WES FORM JAN 74 819 EDITION OF NOV 1971 MAY BE USED

Sheet 2 of 2 Sheets

BORING LOG
FIELD DATA

Project NWSC Groundwater Study Site Crane, IN Date 10 Nov. 1981
Location Highway 58 Dump Site B Job No. 441-G150.11GR21/22
Drill Rig Failing Inspector J. Dunbar Operator D. Taylor Surface El 583.66 Boring No. WES-8-4-81

SAMPLE NUMBER	DATE TAKEN 1981	STRATUM FROM	STRATUM TO	DRIVE FROM	DRIVE TO	SAMPLE FROM	SAMPLE TO	TYPE OF SAMPLER	Hyd. Press	Cont	CLASSIFICATION AND REMARKS
1A	10Nov	0.0		0.0	2.5	0.0	0.8	3" Shelby Tube		Jar	Gravelly clay (CL): brown, soft,
1A											low plasticity, and contains 25-30%
											limestone and sandstone fragments
											Tube damaged in push.
				0.0	4.0	—	—	7" Solid Auger		—	Cleanout
	10Nov		9.0	4.0	39.0	—	—	5 5/8" Rock Bit		—	Overburden: clay, gravel, cobbles,
											and boulders. Rock portion is
											primarily limestone.
		9.0	11.6								Sandy clay shale: soft and red
		11.6	15.8								Sandy clay shale: soft and brown
		15.8	33.2								Shale: grey-soft and sandy between
											29-30 ft
		33.2	35.5								Limestone: grey and hard
	11Nov			39.0	70.0	—	—	5 5/8" Rock Bit		—	No water in hole overnight.
		35.5	45.2								Sandstone: brown and hard

WES FORM JAN 74 819 EDITION OF NOV 1971 MAY BE USED

BORING LOG
FIELD DATA

Project _____ Site _____ Date _____
Location _____ Job No. _____
Drill Rig _____ Inspector _____ Operator _____ Surface El _____ Boring No. WES-8-4-81

SAMPLE NUMBER	DATE TAKEN 1981	STRATUM FROM	STRATUM TO	DRIVE FROM	DRIVE TO	SAMPLE FROM	SAMPLE TO	TYPE OF SAMPLER			CLASSIFICATION AND REMARKS
		45.2	48.1								Shale: grey
		48.1	50.0								Sandstone: hard and brown
		50.0	52.3								Shale: grey and hard
		52.3	71.6								Sandstone: brown and hard
				70.0	80.0			5 5/8" Rock	Bit		Water at 70 ft, waited 60 min and
											water rose 1.5 ft
		71.6	73.8								Shale: grey and hard
		73.8	80.0								Limestone: grey and hard
											Installed well.

WES FORM JAN 74 819 EDITION OF NOV 1971 MAY BE USED

Sheet 2 of 2 Sheets

BORING LOG
FIELD DATA

Project NWSC Groundwater Study Site Crane, IN Date 11 Nov. 1981
Location Highway 58 Dump Site B Job No. 441-G150,11GR21/22
Drill Rig Failing Inspector J. Dunbar Operator D. Taylor Surface El 583.84 Boring No. WES-8-5-81

SAMPLE NUMBER	DATE TAKEN 1981	STRATUM FROM	STRATUM TO	DRIVE FROM	DRIVE TO	SAMPLE FROM	SAMPLE TO	TYPE OF SAMPLER	Hyd. Press	Cont	CLASSIFICATION AND REMARKS
1	11Nov	0.0		0.0	2.5	0.0	0.94	3" Shelby Tube		ST	Clay (CH): brown to dark brown in
1A						0.94	1.29			Jar	color, soft, and high plasticity.
											Sample length: 1.29 ft-Tube bent
											in push
				0.0	3.3	—	—	7" Solid Auger		—	Cleanout: clay, cobbles, and boulders
	11Nov		5.1	3.3	26.0	—	—	6 3/4" Rock Bit		—	Clay, cobbles, and boulders
		5.1	10.5								Shale: brown and soft
		10.5	11.3								Shale: grey and soft
		11.3	12.3								Limestone: grey and hard
		12.3	15.8								Shale: grey and medium
		15.8	17.0								Sandstone: brown and soft
		17.0	30.1								Shale: dark grey and soft
	12Nov			26.0	28.2	—	—	Dennison Barrel			For core log see page 3.
				28.2	30.4	—	—	Dennison Barrel			Core information above 26 ft is

WES FORM JAN 74 819 EDITION OF NOV 1971 MAY BE USED

BORING LOG
FIELD DATA

Project _____ Site _____ Date _____
Location _____ Job No. _____
Drill Rig _____ Inspector _____ Operator _____ Surface El _____ Boring No. WES-8-5-81

SAMPLE NUMBER	DATE TAKEN 1981	STRATUM FROM	STRATUM TO	DRIVE FROM	DRIVE TO	SAMPLE FROM	SAMPLE TO	TYPE OF SAMPLER			CLASSIFICATION AND REMARKS
				30.4	35.2	— —	—	4 x 5 1/2" Core Barrel			found on boring WES-8-2-81.
				35.2	36.0	—	—	Dennison Barrel			
				36.0	37.8	—	—	4 x 5 1/2" Core Barrel			
				37.8	38.3	—	—	Dennison Barrel			
				38.3	43.1	—	—	4 x 5 1/2" Core Barrel			
				43.1	47.8	—	—	4 x 5 1/2" Core Barrel			
	13Nov			47.8	52.5	—	—	4 x 5 1/2" Core Barrel			
				52.5	57.2	—	—	4 x 5 1/2" Core Barrel			
				57.2	61.9	—	—	4 x 5 1/2" Core Barrel			
				61.9	65.75	—	—	4 x 5 1/2" Core Barrel			
				65.75	70.75	—	—	4 x 5 1/2" Core Barrel			

WES FORM JAN 74 819 EDITION OF NOV 1971 MAY BE USED

Hole No. WES-8-5-81

DRILLING LOG	DIVISION U.S. Navy	INSTALLATION Crane, IN	SHEET 3 OF 7 SHEETS

1. PROJECT NWSC Groundwater Study	10. SIZE AND TYPE OF BIT 4 x 5-1/2 in Diamond
2. LOCATION (Coordinates or Station) Highway 58 Dump Site B	11. DATUM FOR ELEVATION SHOWN (TBM or MSL) MSL
3. DRILLING AGENCY CEWES	12. MANUFACTURER'S DESIGNATION OF DRILL Failing 1500
4. HOLE NO. (As shown on drawing title and file number) WES-8-5-81	13. TOTAL NO. OF OVER-BURDEN SAMPLES TAKEN: DISTURBED zero; UNDISTURBED one
5. NAME OF DRILLER C. Drake	14. TOTAL NUMBER CORE BOXES zero
6. DIRECTION OF HOLE [X] VERTICAL [ ] INCLINED ____ DEG. FROM VERT.	15. ELEVATION GROUND WATER
	16. DATE HOLE: STARTED 11 Nov. 1981; COMPLETED 13 Nov. 1981
7. THICKNESS OF OVERBURDEN 5.1 ft	17. ELEVATION TOP OF HOLE 583.84
8. DEPTH DRILLED INTO ROCK 65.65 ft	18. TOTAL CORE RECOVERY FOR BORING %
9. TOTAL DEPTH OF HOLE 70.75 ft	19. SIGNATURE OF INSPECTOR Joseph B. Dixon

ELEVATION a	DEPTH b	LEGEND c	CLASSIFICATION OF MATERIALS (Description) d	% CORE RECOVERY e	BOX OR SAMPLE NO. f	REMARKS (Drilling time, water loss, depth of weathering, etc., if significant) g
558.84	25.0					
557.84	26.0					
			Shale; dark greenish grey, soft, brittle, and uniform			
556.84	27.0		fractured			
			Breaks occured when drilling and pushing sample			
555.84	28.0		Run 1	100%	-	Dennison Barrel
554.84	29.0					
			Shale; same			
			Breaks ocurred when drilling and pushing sample.			
553.84	30.0		Run 2	100%	-	Dennison Barrel
			fractured			
552.84	31.0					
			Shale (60-70%) and sandstone lenses (30-40%): highly weathered, orange brown in color, brittle, and very soft.			aL - Run 3 Began - Rec 4.6' End - Loss 0.2' Time - Gain - Drl time - Hyd press 100psi Water press - RPM 50-75 Drl Action Smooth Water rot Brown Remarks Partial recovery
551.84	32.0					
550.84	33.0					
549.84	34.0					
				80%	-	
548.84	35.0		Recovered to about 35 ft			

ENG FORM 1836 MAR 71 PREVIOUS EDITIONS ARE OBSOLETE. (TRANSLUCENT)

PROJECT | HOLE NO.

Hole No. WES-8-5-81

DRILLING LOG	DIVISION	INSTALLATION	SHEET 4 OF 7 SHEETS

1. PROJECT	10. SIZE AND TYPE OF BIT
	11. DATUM FOR ELEVATION SHOWN (TBM or MSL)
2. LOCATION (Coordinates or Station)	12. MANUFACTURER'S DESIGNATION OF DRILL
3. DRILLING AGENCY	13. TOTAL NO. OF OVER-BURDEN SAMPLES TAKEN — DISTURBED — UNDISTURBED
4. HOLE NO. (As shown on drawing title and file number)	14. TOTAL NUMBER CORE BOXES
5. NAME OF DRILLER	15. ELEVATION GROUND WATER
6. DIRECTION OF HOLE ☐ VERTICAL ☐ INCLINED ____ DEG. FROM VERT.	16. DATE HOLE — STARTED — COMPLETED
7. THICKNESS OF OVERBURDEN	17. ELEVATION TOP OF HOLE
8. DEPTH DRILLED INTO ROCK	18. TOTAL CORE RECOVERY FOR BORING %
9. TOTAL DEPTH OF HOLE	19. SIGNATURE OF INSPECTOR

ELEVATION a	DEPTH b	LEGEND c	CLASSIFICATION OF MATERIALS (Description) d	% CORE RECOVERY e	BOX OR SAMPLE NO. f	REMARKS (Drilling time, water loss, depth of weathering, etc., if significant) g
548.84	35.0		Run 3			
			Sandstone: brown, fine-grained, and friable-recovered several fragments.			Run 5 Rec 0.0 Loss 1.8 Gain -
547.84	36.0		Run 4			
			Sandstone: no recovery	0%	-	Drl time - Hyd press 100psi Water press RPM 50-75 Drl Action Smooth Water-rot Brown Remarks Used Dennsion Barrel
546.84	37.0					
			Run 5 Dennison Barrel			
545.84	38.0		Sandstone			
			Run 6 Dennison Barrel			
544.84	39.0					Run 7 Rec 4.9 Loss - Gain - Drl time - Hyd press 50-100psi Water press RPM 100 Drl Action Smooth Water rot Brown
543.84	40.0					
			Sandstone: brown in color, fine-grained quartz sand, friable to moderately hard, very uniform in composition, and massive to thinly bedded.			
542.84	41.0					
541.84	42.0					Run 8 Rec 4.7 Loss - Gain - Drl time - Hyd press 100-240 Water press - RPM 100 Drl Action Smooth Water rot Brown Remarks Slight moisture at 43 ft, but no water.
540.84	43.0		Run 7	100%	-	
539.84	44.0		Sandstone: same	100%	-	
538.84	45.0					

ENG FORM 1836 MAR 71 PREVIOUS EDITIONS ARE OBSOLETE. (TRANSLUCENT)

PROJECT | HOLE NO.

Hole No. WES-8-5-81

DRILLING LOG	DIVISION	INSTALLATION	SHEET 5 OF 7 SHEETS

1. PROJECT	10. SIZE AND TYPE OF BIT
2. LOCATION (Coordinates or Station)	11. DATUM FOR ELEVATION SHOWN (TBM or MSL)
3. DRILLING AGENCY	12. MANUFACTURER'S DESIGNATION OF DRILL
4. HOLE NO. (As shown on drawing title and file number)	13. TOTAL NO. OF OVER-BURDEN SAMPLES TAKEN: DISTURBED / UNDISTURBED
5. NAME OF DRILLER	14. TOTAL NUMBER CORE BOXES
6. DIRECTION OF HOLE ☐ VERTICAL ☐ INCLINED ____ DEG. FROM VERT.	15. ELEVATION GROUND WATER
	16. DATE HOLE: STARTED / COMPLETED
7. THICKNESS OF OVERBURDEN	17. ELEVATION TOP OF HOLE
8. DEPTH DRILLED INTO ROCK	18. TOTAL CORE RECOVERY FOR BORING %
9. TOTAL DEPTH OF HOLE	19. SIGNATURE OF INSPECTOR

ELEVATION a	DEPTH b	LEGEND c	CLASSIFICATION OF MATERIALS (Description) d	% CORE RECOVERY e	BOX OR SAMPLE NO. f	REMARKS (Drilling time, water loss, depth of weathering, etc., if significant) g
538.84	45.0					
537.84	46.0					
536.84	47.0		Sandstone	100%	-	WL - Run 9 Began - Rec 4.7 End - Loss - Time - Gain - Drl time - Hyd press 100-200 Water press - RPM 100 Drl Action Smooth Water ret Brown Sligth moisture causing barrel to block
535.84	48.0		machine fracture			
534.84	49.0					
533.84	50.0		Sandstone	100%	-	WL - Run 10 Began - Rec 4.7 End - Loss - Time - Gain - Drl time - Hyd press 100-200psi Water press - RPM 70 Drl Action Smooth Water ret Brown
532.84	51.0		oxidized and friable			
531.84	52.0		Run 9			
530.84	53.0					
529.84	54.0		Sandstone: orange brown to brown, fine-grained quartz sand, hard, and very uniform.			
528.84	55.0					

ENG FORM 1836 MAR 71 PREVIOUS EDITIONS ARE OBSOLETE. (TRANSLUCENT)

PROJECT | HOLE NO.

Hole No. WES-8-5-81

DRILLING LOG	DIVISION	INSTALLATION	SHEET 6 OF 7 SHEETS

1. PROJECT	10. SIZE AND TYPE OF BIT
2. LOCATION (Coordinates or Station)	11. DATUM FOR ELEVATION SHOWN (TBM or MSL)
3. DRILLING AGENCY	12. MANUFACTURER'S DESIGNATION OF DRILL
4. HOLE NO. (As shown on drawing title and file number)	13. TOTAL NO. OF OVER-BURDEN SAMPLES TAKEN — DISTURBED — UNDISTURBED
5. NAME OF DRILLER	14. TOTAL NUMBER CORE BOXES
	15. ELEVATION GROUND WATER
6. DIRECTION OF HOLE ☐ VERTICAL ☐ INCLINED ____ DEG. FROM VERT.	16. DATE HOLE — STARTED — COMPLETED
7. THICKNESS OF OVERBURDEN	17. ELEVATION TOP OF HOLE
8. DEPTH DRILLED INTO ROCK	18. TOTAL CORE RECOVERY FOR BORING %
9. TOTAL DEPTH OF HOLE	19. SIGNATURE OF INSPECTOR

ELEVATION a	DEPTH b	LEGEND c	CLASSIFICATION OF MATERIALS (Description) d	% CORE RECOVERY e	BOX OR SAMPLE NO. f	REMARKS (Drilling time, water loss, depth of weathering, etc., if significant) g
528.84	55.0					
527.84	56.0		Sandstone: same	100%	-	
526.84	57.0		Run 10			
525.84	58.0					HL - Run 11 Began - Rec 4.7 End - Loss - Time - Gain - Drl time - Hyd press 100-200psi Water press - RPM 70-100psi Drl Action Smooth Water ret Slight-brown Remarks
524.84	59.0		Sandstone: same black discoloration			More difficult to drill, slight moisture water at 59 ft.
523.84	60.0					
522.84	61.0			100%	-	HL - Run 12 Began - Rec 3.85 End - Loss - Time - Gain - Drl time Hyd press 100-200psi Water press - RPM 50-100 Drl Action Smooth Water ret Slight-brown Remarks -
521.84	62.0		Run 11			
520.84	63.0		Sandstone: brown, uniform, very fine-grained, hard and slight reaction with HCL.	100%	-	
519.84	64.0					
518.84	65.0					

ENG FORM 1836 MAR 71 PREVIOUS EDITIONS ARE OBSOLETE. (TRANSLUCENT)

PROJECT | HOLE NO.

Hole No. WES-B-5-81

DRILLING LOG	DIVISION	INSTALLATION	SHEET 7 OF 7 SHEETS

1. PROJECT	10. SIZE AND TYPE OF BIT
2. LOCATION (Coordinates or Station)	11. DATUM FOR ELEVATION SHOWN (TBM or MSL)
3. DRILLING AGENCY	12. MANUFACTURER'S DESIGNATION OF DRILL
4. HOLE NO. (As shown on drawing title and file number)	13. TOTAL NO. OF OVER-BURDEN SAMPLES TAKEN: DISTURBED / UNDISTURBED
5. NAME OF DRILLER	14. TOTAL NUMBER CORE BOXES
6. DIRECTION OF HOLE ☐ VERTICAL ☐ INCLINED ____ DEG. FROM VERT.	15. ELEVATION GROUND WATER
	16. DATE HOLE: STARTED / COMPLETED
7. THICKNESS OF OVERBURDEN	17. ELEVATION TOP OF HOLE
8. DEPTH DRILLED INTO ROCK	18. TOTAL CORE RECOVERY FOR BORING %
9. TOTAL DEPTH OF HOLE	19. SIGNATURE OF INSPECTOR

ELEVATION a	DEPTH b	LEGEND c	CLASSIFICATION OF MATERIALS (Description) d	% CORE RECOVERY e	BOX OR SAMPLE NO. f	REMARKS (Drilling time, water loss, depth of weathering, etc., if significant) g
518.84	65.0		Sandstone Run 12			
517.84	66.0					
516.84	67.0		black discoloration			ML - Run 13 Began - Rec 5.0 End - Loss - Time - Gain - Drl time - Hyd press 100-200psi Water press - RPM 700-100 Drl Action Smooth Water let -
515.84	68.0		Limestone: light grey to pinkish grey in color, fine-grained, moderatel; hard, and massive to thinly bedded.	100%		
514.84	69.0					
513.84	70.0					
			Run 13			

BORING LOG
FIELD DATA

Project NWSC Groundwater Study Site Crane, IN Date 19 Nov. 1981
Location Highway 58 Dump Site B Job No. 441-G150.11GR21/22
Drill Rig Failing Inspector J. Dunbar Operator D. Taylor Surface El 582.70 Boring No. WES-8-6-81

SAMPLE NUMBER	DATE TAKEN 1981	STRATUM FROM	STRATUM TO	DRIVE FROM	DRIVE TO	SAMPLE FROM	SAMPLE TO	TYPE OF SAMPLER	Hyd. Press	Cont	CLASSIFICATION AND REMARKS
	17 Nov	0.0	6.0	0.0	30.0	—	—	5 5/8" Rock	Bit	—	Clay, gravel, cobbles, and boulders
		6.0	11.0								Clay shale: reddish brown and soft
		11.0	14.0								Clay shale: same, moisture-water
		14.0	30.0								Clay shale: soft to 22 ft and
											medium hard to 30 ft
											Hole to remain open for several
											days to monitor water-moisture.
											Water level steady around 18 ft.
											Blew hole and installed well on
											26 Nov. 1981.

WES FORM JAN 74 819 EDITION OF NOV 1971 MAY BE USED

Sheet 1 of 1 Sheets

BORING LOG
FIELD DATA

Project NWSC Groundwater Study Site Crane, IN Date 20 Nov. 1981
Location Highway 58 Dump Site B Job No. 441-G150.11GR21/22
Drill Rig Failing Inspector J. Dunbar Operator D. Taylor Surface El 640.75 Boring No. WES-8.7-81

SAMPLE NUMBER	DATE TAKEN 1981	STRATUM FROM	STRATUM TO	DRIVE FROM	DRIVE TO	SAMPLE FROM	SAMPLE TO	TYPE OF SAMPLER			CLASSIFICATION AND REMARKS
	20Nov	0.0	4.7	0.0	52.2	—	—	5 5/8" Rock	Bit	—	Sandstone: brown, hard, and fine-
											grained
		4.7	5 8								Shale: grey and medium
		5.8	17.6								Sandstone: brown and medium
		17.6	18.4								Clay shale: red
		18.4	23.1								Limestone: light grey and hard
		23.1	33.2								Sandstone: hard and brown
		33.2	37.4								Limestone: light grey and hard
		37.4	40.6								Sandstone: hard
		40.6	52.2								Limestone: light grey and medium
											hard
	21Nov	52.2	54.3	52.2	120.0						Sandstone: hard
		54.3	55.6								Shale: grey and medium hard
		55.6	57.4								Limestone: very hard and light grey
		57.4	66.3								Shale and sandstone
		66.3	70.2			Water	between	66.3 and	70.2		Limestone: grey and hard
		70.2	90.0								Shale: grey and medium hard

WES FORM JAN 74 819 EDITION OF NOV 1971 MAY BE USED

BORING LOG
FIELD DATA

Project _____ Site _____ Date _____
Location _____ Job No. _____
Drill Rig _____ Inspector _____ Operator _____ Surface El _____ Boring No. WES-8-7-81

SAMPLE NUMBER	DATE TAKEN 1981	STRATUM FROM	STRATUM TO	DRIVE FROM	DRIVE TO	SAMPLE FROM	SAMPLE TO	TYPE OF SAMPLER			CLASSIFICATION AND REMARKS
		90.0	91.7								Limestone: light grey and hard
		91.7	92.3								Shale: grey
		92.3	93.2								Limestone: light grey and hard
		93.2	94.2								Shale: grey
		94.2	96.3								Sandstone: brown, hard and fine-
											grained
		96.3	125.7								Sandstone: brown, soft and fine-
											grained
		125.7	131.2								Limestone: hard and light grey
											Water sticking rock bit- grouted
											hole to 70.0 ft
	22Nov			0.0	45.0	—	—	8 3/4" Rock	Bit	—	Cleanout for 6" casing to seal off
											water from 66.3-70.2 ft.
	23Nov			45.0	78.0	—	—	8 3/4" Rock	Bit	—	Cleanout: continued

WES FORM JAN 74 819 EDITION OF NOV 1971 MAY BE USED

BORING LOG
FIELD DATA

Project _____ Site _____ Date _____
Location _____ Job No. _____
Drill Rig _____ Inspector _____ Operator _____ Surface El _____ Boring No. WES-8-7-81

SAMPLE NUMBER	DATE TAKEN 1981	STRATUM FROM	STRATUM TO	DRIVE FROM	DRIVE TO	SAMPLE FROM	SAMPLE TO	TYPE OF SAMPLER			CLASSIFICATION AND REMARKS
	24Nov										Grouted 6" casing into hole.
											Bottom at 78 ft with 2 ft stickup.
	25Nov			62.0	131.2			5 5/8" Rock	Bit		Drilled grout from 62 to 120 ft.

WES FORM JAN 74 819 EDITION OF NOV 1971 MAY BE USED

Sheet 3 of 3 Sheets

BORING LOG
FIELD DATA

Project NWSC Groundwater Study Site Crane, IN Date 26 Nov. 1981
Location Highway 58 Dump Site B Job No. 441-G150,11GR21/22
Drill Rig Failing Inspector J. Dunbar Operator C. Drake Surface El 586.31 Boring No. WES-8-8-81

SAMPLE NUMBER	DATE TAKEN 1981	STRATUM FROM	STRATUM TO	DRIVE FROM	DRIVE TO	SAMPLE FROM	SAMPLE TO	TYPE OF SAMPLER		Cont.	CLASSIFICATION AND REMARKS
1	26Nov	0.0	1.25	0.0	1.05	0.0	9.0	3" Shelby Tube	—	ST	Sandy clay (CL); brown in color,
1A						9.0	1.05			Jar	soft, slightly moist, and low
											plasticity.
	26Nov	1.25	14.0	0.0	14.0	—	—	5 5/8" Rock	Bit	—	Clay, gravel, cobbles, and boulders
	27Nov			14.0	69.87	—	—	5 5/8" Rock	Bit	—	Limestone to 9 ft, sandstone to 14 ft
		14.0	27.0								Clay shale: grey, soft, and slightly
											damp
		27.0	36.0								Shale: grey and soft
		36.0	37.5								Sandstone: brown and fine-grained
		37.5	41.0								Sandstone and shale
		41.0	44.5								Sandstone: brown and hard
		44.5	53.5								Sandstone: brown and soft
		53.5	58.0								Sandstone: brown and very soft
		58.0	66.8								Sandstone: brown, very soft, and
											damp
		66.8	69.87								Sandstone: brown, hard, and dry.

WES FORM JAN 74 819 EDITION OF NOV 1971 MAY BE USED

BORING LOG
FIELD DATA

Project _____ Site _____ Date _____
Location _____ Job No. _____
Drill Rig _____ Inspector _____ Operator _____ Surface El _____ Boring No WES-8-8-81

SAMPLE NUMBER	DATE TAKEN 1981	STRATUM		DRIVE		SAMPLE		TYPE OF SAMPLER			CLASSIFICATION AND REMARKS
		FROM	TO	FROM	TO	FROM	TO				
											Installed well.

WES FORM JAN 74 819 EDITION OF NOV 1971 MAY BE USED

Sheet 2 of 2 Sheets

BORING LOG
FIELD DATA

Project NWSC Groundwater Study Site Crane, IN Date 26 Nov. 1981
Location Highway 58 Dump Site B Job No. 441-G150.11GR21/22
Drill Rig Failing Inspector J. Dunbar Operator D. Taylor Surface El 586.33 Boring No. WES-8-9-81

SAMPLE NUMBER	DATE TAKEN 1981	STRATUM FROM	STRATUM TO	DRIVE FROM	DRIVE TO	SAMPLE FROM	SAMPLE TO	TYPE OF SAMPLER	Hyd. Press	Cont.	CLASSIFICATION AND REMARKS
1	26Nov	0.0		0.0	0.8	0.0	0.65	3" Shelby Tube	—	ST	Gravelly clay (CL): brown in color,
1A						0.65	0.80			Jar	soft, slightly moist, and contains
											5% fine to medium gravel,
											Sample length: 0.80 ft
	27Nov		4.8	0.0	80.0	—	—	5 5/8" Rock	Bit	—	Clay (CL), gravel, cobbles, and boulders
		4.8	9.6								Shale, grey with cobbles and boulders
		9.6	11.3								Limestone: grey and hard.
		11.3	12.1								Shale: grey
		12.1	13.5								Limestone: light grey and hard.
		13.5	15.0								Shale: brown
		15.0	32.0								Shale: grey and medium hard.
		32.0	34.5								Sandstone: brown and fine-grained
		34.5	35.3								Limestone: light grey and hard.
		35.3	53.6								Sandstone: brown, hard and fine-grained.
		53.6	69.3								Sandstone: brown, medium and fine-grained.

WES FORM JAN 74 819 EDITION OF NOV 1971 MAY BE USED

BORING LOG
FIELD DATA

Project _____ Site _____ Date _____
Location _____ Job No.
Drill Rig _____ Inspector _____ Operator _____ Surface El _____ Boring No. WES-8-9-81

SAMPLE NUMBER	DATE TAKEN	STRATUM		DRIVE		SAMPLE		TYPE OF SAMPLER			CLASSIFICATION AND REMARKS
		FROM	TO	FROM	TO	FROM	TO				
		69.3	72.7								Sandstone: brownish grey, hard,
											and fine-grained.
		72.7	80.0								Limestone: light grey and hard
											Installed well.

WES FORM JAN 74 819 EDITION OF NOV 1971 MAY BE USED

Sheet 2 of 2 Sheets

Crane SWMU 26 Human Health Screening Criteria - Groundwater Samples

PSL Selection Hierarchy:			3			1		2		
Analyte	**CAS Number**	**EPA Regional Screening Level, Tap Water[1] (ug/L)**	**Adjusted EPA Regional Screening Level, Tap Water[2] (ug/L)**	**EPA Regional Screening Level, Vapor[1] (ug/L)**	**Adjusted EPA Regional Screening Level, Vapor[2] (ug/L)**	**EPA Maximum Contaminant Level (ug/L)[3]**	**IDEM GW[4] (ug/L)**	**IDEM GW Default Closure Level[4] (ug/L)**	**PSL (ug/L)**	**PSL Criteria**
Volatile Organic Compounds										
1,1,1-Trichloroethane	71-55-6	9100 N	910 N	7400 N	740 N	200	3800	200	200	MCL
1,1,2,2-Tetrachloroethane	79-34-5	0.067 C	0.067 C	2.8 C	2.8 C	NA	0.9	0.9	0.9	IDEM G-DCL
1,1,2-trichloro-1,2,2-trifluoroethane (Freon 113)	76-13-1	59000 N	5900 N	1400 N	140 N	NA	NA	NA	5900	T-RSL
1,1,2-Trichloroethane	79-00-5	0.24 C	0.24 C	4.4 C	4.4 C	5	3.2	5	5	MCL
1,1-Dichloroethane	75-34-3	2.4 C	2.4 C	6.5 C	6.5 C	NA	990	990	990	IDEM G-DCL
1,1-Dichloroethene	75-35-4	340 N	34 N	190 N	19 N	7	430	7	7	MCL
1,2,3- Trichlorobenzene	87-61-6	29 N	2.9 N	NA	NA	NA	NA	NA	2.9	T-RSL
1,2,4-Trichlorobenzene	120-82-1	4.1 N[5]	0.41 N[5]	36 N	3.6 N	70	9.5	70	70	MCL
1,2-Dibromo-3-chloropropane (DBCP)	96-12-8	0.00032 C	0.00032 C	0.027 C	0.027 C	0.2	NA	NA	0.2	MCL
1,2-Dibromoethane (EDB)	106-93-4	0.0065 C	0.0065 C	0.15 C	0.15 C	0.05	0.086	0.05	0.05	MCL
1,2-Dichlorobenzene	95-50-1	370 N	37 N	2700 N	270 N	600	480	600	600	MCL
1,2-Dichloroethane	107-06-2	0.15 C	0.15 C	2.0 C	2.0 C	5	2	5	5	MCL
1,2-Dichloropropane	78-87-5	0.39 C	0.39 C	2.0 C	2.0 C	5	2.6	5	5	MCL
1,3-Dichlorobenzene	541-73-1	NA	NA	NA	NA	NA	80	80	80	IDEM G-DCL
1,4-Dichlorobenzene	106-46-7	0.43 C	0.43 C	2.2 C	2.2 C	75	8	75	75	MCL
1,4-Dioxane	123-91-1	0.67 C	0.67 C	NA	NA	NA	NA	NA	0.67	T-RSL
2-Butanone (MEK)	78-93-3	7100 N	710 N	2300000 N	230000 N	NA	8400	8400	8400	IDEM G-DCL
2-Hexanone	591-78-6	47 N	4.7 N	8200 N	820 N	NA	NA	NA	4.7	T-RSL
4-Methyl-2-pentanone (MIBK)	108-10-1	2000 N	200 N	550000 N	55000 N	NA	2200	2200	2200	IDEM G-DCL
Acetone	67-64-1	22000 N	2200 N	23000000 N	2300000 N	NA	6900	6900	6900	IDEM G-DCL
Benzene	71-43-2	0.41 C	0.41 C	1.3 C	1.3 C	5	5.5	5	5	MCL
Bromochloromethane	74-97-5	NA	NA	NA	NA	NA	NA	NA	NA	None
Bromodichloromethane	75-27-4	0.12 C	0.12 C	0.76 C	0.76 C	80	2.9	80	80	MCL
Bromoform	75-25-2	8.5 C	8.5 C	100 C	100 C	80	110	80	80	MCL
Bromomethane	74-83-9	8.7 N	0.87 N	17 N	1.7 N	NA	11	11	11	IDEM G-DCL
Carbon disulfide	75-15-0	1000 N	100 N	1200 N	120 N	NA	1300	1300	1300	IDEM G-DCL
Carbon tetrachloride	56-23-5	0.44 C	0.44 C	0.37 C	0.37 C	5	2.6	5	5	MCL
Chlorobenzene	108-90-7	91 N	9.1 N	400 N	40 N	100	130	100	100	MCL
Chloroethane	75-00-3	21000 N	2100 N	22000 N	2200 N	NA	62	62	62	IDEM G-DCL
Chloroform	67-66-3	0.19 C	0.19 C	0.73 C	0.73 C	80	2.8	80	80	MCL
Chloromethane	74-87-3	190 N	19 N	260 N	26 N	NA	NA	NA	19	T-RSL
cis-1,2-Dichloroethene	156-59-2	73 N	7.3 N	NA	NA	70	77	70	70	MCL
cis-1,3-Dichloropropene	10061-01-5	40 N[6]	4 N[6]	4.1 C[6]	4.1 C[6]	NA	NA	NA	4	T-RSL
Cyclohexane	110-82-7	13000 N	1300 N	1000 N	100 N	NA	13000	13000	1300	IDEM G-DCL
Dibromochloromethane	124-48-1	0.15 C	0.15 C	2.8 C	2.8 C	80	NA	NA	80	MCL
Dichlorodifluoromethane	75-71-8	390 N	39 N	15 N	1.5 N	NA	NA	NA	39	T-RSL
Ethylbenzene	100-41-4	1.5 C	1.5 C	3.0 C	3 C	700	1600	700	700	MCL
Isopropylbenzene	98-82-8	680 N	68 N	890 N	89 N	NA	830	830	830	IDEM G-DCL
m,p-Xylenes	179601-23-1	200 N[7]	20 N[7]	480 N[7]	48 N[7]	10000	NA	NA	10000	MCL
Methyl acetate	79-20-9	37000 N	3700 N	NA	NA	NA	NA	NA	3700	T-RSL
Methylcyclohexane	108-87-2	NA	NA	NA	NA	NA	NA	NA	NA	None
Methylene chloride	75-09-2	4.8 C	4.8 C	40 C	40 C	5	63	5	5	MCL
Methyl-tert-butyl ether	1634-04-4	12 C	12 C	390 C	390 C	NA	40	40	40	IDEM G-DCL
o-Xylene	95-47-6	1200 N	120 N	3500 N	350 N	NA	NA	NA	120	T-RSL
Styrene	100-42-5	1600 N	160 N	9100 N	910 N	100	2000	100	100	MCL
Tetrachloroethene	127-18-4	0.11 C	0.11 C	0.57 C	0.57 C	5	6.5	5	5	MCL
Toluene	108-88-3	2300 N	230 N	19000 N	1900 N	1000	2400	1000	1000	MCL
trans-1,2-Dichloroethene	156-60-5	110 N	11 N	370 N	37 N	100	150	100	100	MCL
trans-1,3-Dichloropropene	10061-02-6	40 N[6]	4.0 N[6]	4.1 C[6]	4.1 C[6]	NA	NA	NA	4.0	T-RSL

Crane SWMU 26 Human Health Screening Criteria - Groundwater Samples

PSL Selection Hierarchy:			3			1		2		
Analyte	**CAS Number**	**EPA Regional Screening Level, Tap Water[1] (ug/L)**	**Adjusted EPA Regional Screening Level, Tap Water[2] (ug/L)**	**EPA Regional Screening Level, Vapor[1] (ug/L)**	**Adjusted EPA Regional Screening Level, Vapor[2] (ug/L)**	**EPA Maximum Contaminant Level (ug/L)[3]**	**IDEM GW[4] (ug/L)**	**IDEM GW Default Closure Level[4] (ug/L)**	**PSL (ug/L)**	**PSL Criteria**
Trichloroethene	79-01-6	2.0 C	2.0 C	3.0 C	3.0 C	5	2.8	5	5	MCL
Trichlorofluoromethane	75-69-4	1300 N	130 N	180 N	18 N	NA	1700	1700	1700	IDEM G-DCL
Vinyl chloride	75-01-4	0.016 C	0.016 C	0.15 C	0.15 C	2	0.53	2	2	MCL
Xylenes (total)	1330-20-7	200 N	20 N	480 N	48 N	10000	270	10000	10000	MCL
Semivolatile Organic Compounds										
1,1'-Biphenyl	92-52-4	1800 N	180 N	NA	NA	NA	NA	NA	180	T-RSL
1,2,4,5-Tetrachlorobenzene	95-94-3	11 N	1.1 N	NA	NA	NA	NA	NA	1.1	T-RSL
2,2'-Oxybis(1-chloropropane)	108-60-1	0.32 C	0.32 C	80 C	80 C	NA	4.2	4.2	4.2	IDEM G-DCL
2,3,4,6-Tetrachlorophenol	58-90-2	1100 N	110 N	NA	NA	NA	NA	NA	110	T-RSL
2,4,5-Trichlorophenol	95-95-4	3700 N	370 N	NA	NA	NA	3600	3600	3600	IDEM G-DCL
2,4,6-Trichlorophenol	88-06-2	37 N[5]	3.7 N[5]	NA	NA	NA	3.6	3.6	3.6	IDEM G-DCL
2,4-Dichlorophenol	120-83-2	110 N	11 N	NA	NA	NA	110	110	110	IDEM G-DCL
2,4-Dimethylphenol	105-67-9	730 N	73 N	NA	NA	NA	730	730	730	IDEM G-DCL
2,4-Dinitrophenol	51-28-5	73 N	7.3 N	NA	NA	NA	73	73	73	IDEM G-DCL
2,4-Dinitrotoluene	121-14-2	0.22 C	0.22 C	NA	NA	NA	NA	NA	0.22	T-RSL
2,6-Dinitrotoluene	606-20-2	37 N	3.7 N	NA	NA	NA	NA	NA	3.7	T-RSL
2-Chloronaphthalene	91-58-7	2900 N	290 N	NA	NA	NA	610	610	610	IDEM G-DCL
2-Chlorophenol	95-57-8	180 N	18 N	NA	NA	NA	38	38	38	IDEM G-DCL
2-Methylphenol (o-Cresol)	95-48-7	1800 N	180 N	NA	NA	NA	1800	1800	1800	IDEM G-DCL
2-Nitroaniline	88-74-4	370 N	37 N	NA	NA	NA	110	110	110	IDEM G-DCL
2-Nitrophenol	88-75-5	73 N[8]	7.3 N[8]	NA	NA	NA	NA	NA	7.3	T-RSL
3,3'-Dichlorobenzidine	91-94-1	0.15 C	0.15 C	NA	NA	NA	1.9	1.9	1.9	IDEM G-DCL
3-Nitroaniline	99-09-2	NA	NA	NA	NA	NA	NA	NA	NA	None
4,6-Dinitro-2-methylphenol	534-52-1	2.9 N	0.29 N	NA	NA	NA	NA	NA	0.29	T-RSL
4-Bromophenyl phenyl ether	101-55-3	NA	NA	NA	NA	NA	NA	NA	NA	None
4-Chloro-3-methyl phenol	59-50-7	3700 N	370 N	NA	NA	NA	NA	NA	370	T-RSL
4-Chloroanaline	106-47-8	0.34 C	0.34 C	NA	NA	NA	150	150	150	IDEM G-DCL
4-Chlorophenyl phenyl ether	7005-72-3	NA	NA	NA	NA	NA	NA	NA	NA	None
4-Methylphenol (p-Cresol)	106-44-5	180 N	18 N	NA	NA	NA	180	180	180	IDEM G-DCL
4-Nitroaniline	100-01-6	3.4 C	3.4 C	NA	NA	NA	NA	NA	3.4	T-RSL
4-Nitrophenol	100-02-7	NA	NA	NA	NA	NA	NA	NA	NA	None
Acetophenone	98-86-2	3700 N	370 N	NA	NA	NA	NA	NA	370	T-RSL
Atrazine	1912-24-9	0.29 C	0.29 C	NA	NA	3	3.9	3	3	MCL
Benzaldehyde	100-52-7	3700 N	370 N	NA	NA	NA	NA	NA	370	T-RSL
Bis(2-chloroethoxy)methane	111-91-1	110 N	11 N	NA	NA	NA	NA	NA	11	T-RSL
Bis(2-chloroethyl)ether	111-44-4	0.012 C	0.012 C	11 C	11 C	NA	0.15	0.15	0.15	IDEM G-DCL
Bis(2-ethylhexyl)phthalate	117-81-7	4.8 C	4.8 C	NA	NA	6	61	6	6	MCL
Butyl benzyl phthalate	85-68-7	35 C	35 C	NA	NA	NA	7300	2700	7300	IDEM G-DCL
Caprolactam	105-60-2	18000 N	1800 N	NA	NA	NA	NA	NA	1800	T-RSL
Carbazole	86-74-8	NA	NA	NA	NA	NA	43	43	43	IDEM G-DCL
Dibenzofuran	132-64-9	37 N	3.7 N	NA	NA	NA	15	15	15	IDEM G-DCL
Diethyl phthalate	84-66-2	29000 N	2900 N	NA	NA	NA	29000	29000	29000	IDEM G-DCL
Dimethyl phthalate	131-11-3	29000 N[9]	2900 N[9]	NA	NA	NA	360000	360000	36000	IDEM G-DCL
Di-n-butyl phthalate	84-74-2	3700 N	370 N	NA	NA	NA	3600	3600	3600	IDEM G-DCL
Di-n-octyl phthalate	117-84-0	NA	NA	NA	NA	NA	1500	20	20	IDEM G-DCL
Hexachlorobenzene	118-74-1	0.042 C	0.042 C	0.076 C	0.076 C	1	0.53	1	1	MCL
Hexachlorobutadiene	87-68-3	0.86 C	0.86 C	NA	NA	NA	11	11	11	IDEM G-DCL
Hexachlorocyclopentadiene	77-47-4	220 N	22 N	0.19 N	0.019 N	50	220	50	50	MCL
Hexachloroethane	67-72-1	37 N[5]	3.7 N[5]	3.8 C	3.8 C	NA	36	36	36	IDEM G-DCL
Isophorone	78-59-1	71 C	71 C	NA	NA	NA	900	900	900	IDEM G-DCL

Crane SWMU 26 Human Health Screening Criteria - Groundwater Samples

PSL Selection Hierarchy:			3			1		2		
Analyte	**CAS Number**	**EPA Regional Screening Level, Tap Water[1] (ug/L)**	**Adjusted EPA Regional Screening Level, Tap Water[2] (ug/L)**	**EPA Regional Screening Level, Vapor[1] (ug/L)**	**Adjusted EPA Regional Screening Level, Vapor[2] (ug/L)**	**EPA Maximum Contaminant Level (ug/L)[3]**	**IDEM GW[4] (ug/L)**	**IDEM GW Default Closure Level[4] (ug/L)**	**PSL (ug/L)**	**PSL Criteria**
Nitrobenzene	98-95-3	0.12 C	0.12 C	62 C	62 C	NA	4.3	4.3	4.3	IDEM G-DCL
N-Nitrosodi-n-propylamine	621-64-7	0.0096 C	0.0096 C	NA	NA	NA	0.12	0.12	0.12	IDEM G-DCL
N-Nitrosodiphenylamine	86-30-6	14 C	14 C	NA	NA	NA	170	170	170	IDEM G-DCL
Pentachlorophenol	87-86-5	0.17 C	0.17 C	NA	NA	1	7.1	1	1	MCL
Phenol	108-95-2	11000 N	1100 N	NA	NA	NA	11000	11000	11000	IDEM G-DCL
Polycyclic Aromatic Hydrocarbons										
2-Methylnaphthalene	91-57-6	150 N	15 N	NA	NA	NA	31	31	31	IDEM G-DCL
Acenaphthene	83-32-9	2200 N	220 N	NA	NA	NA	460	460	460	IDEM G-DCL
Acenaphthylene	208-96-8	2200 N[10]	220 N[10]	NA	NA	NA	71	71	71	IDEM G-DCL
Anthracene	120-12-7	11000 N	1100 N	NA	NA	NA	2300	2300	2300	IDEM G-DCL
Benzo(a)anthracene	56-55-3	0.029 C	0.029 C	NA	NA	NA	1.2	1.2	1.2	IDEM G-DCL
Benzo(a)pyrene	50-32-8	0.0029 C	0.0029 C	NA	NA	0.2	0.12	0.2	0.2	MCL
Benzo(b)fluoranthene	205-99-2	0.029 C	0.029 C	320 C	320 C	NA	1.2	1.2	1.2	IDEM G-DCL
Benzo(g,h,i)perylene	191-24-2	1100 N[11]	110 N[11]	NA	NA	NA	NA	NA	110	T-RSL
Benzo(k)fluoranthene	207-08-9	0.29 C	0.29 C	NA	NA	NA	12	12	12	IDEM G-DCL
Chrysene	218-01-9	2.9 C	2.9 C	410 C	410 C	NA	120	120	120	IDEM G-DCL
Dibenzo(a,h)anthracene	53-70-3	0.0029 C	0.0029 C	NA	NA	NA	0.12	0.12	0.12	IDEM G-DCL
Fluoranthene	206-44-0	1500 N	150 N	NA	NA	NA	1500	1500	1500	IDEM G-DCL
Fluorene	86-73-7	1500 N	150 N	NA	NA	NA	310	310	310	IDEM G-DCL
Indeno(1,2,3-c,d)pyrene	193-39-5	0.029 C	0.029 C	NA	NA	NA	1.2	1.2	1.2	IDEM G-DCL
Naphthalene	91-20-3	0.14 C	0.14 C	4.0 C	4.0 C	NA	8.3	8.3	8.3	IDEM G-DCL
Phenanthrene	85-01-8	1100 N[11]	110 N[11]	NA	NA	NA	23	23	23	IDEM G-DCL
Pyrene	129-00-0	1100 N	110 N	NA	NA	NA	1100	1100	1100	IDEM G-DCL
Metals										
Aluminum	7429-90-5	37000 N	3700 N	NA	NA	NA	NA	NA	3700	T-RSL
Antimony	7440-36-0	15 N	1.5 N	NA	NA	6	15	6	6	MCL
Arsenic	7440-38-2	0.045 C	0.045 C	NA	NA	10	0.57	10	10	MCL
Barium	7440-39-3	7300 N	730 N	NA	NA	2000	7300	2000	2000	MCL
Beryllium	7440-41-7	73 N	7.3 N	NA	NA	4	73	4	4	MCL
Cadmium	7440-43-9	18 N	1.8 N	NA	NA	5	18	5	5	MCL
Calcium	7440-70-2	NA	NA	NA	NA	NA	NA	NA	NA	None
Chromium	7440-47-3	0.043 C[12]	0.043 C[12]	NA	NA	100	NA	NA	100	MCL
Cobalt	7440-48-4	11 N	1.1 N	NA	NA	NA	NA	NA	1.1	T-RSL
Copper	7440-50-8	1500 N	150 N	NA	NA	1300	1500	1300	1300	MCL
Iron	7439-89-6	26000 N	2600 N	NA	NA	NA	NA	NA	2600	T-RSL
Lead	7439-92-1	15 [13]	15 [13]	NA	NA	15	15	15	15	MCL
Magnesium	7439-95-4	NA	NA	NA	NA	NA	NA	NA	NA	None
Manganese	7439-96-5	880 N	88 N	NA	NA	NA	NA	NA	88	T-RSL
Mercury	7439-97-6	11 N[14]	1.1 N[14]	NA	NA	2	NA	NA	2	MCL
Nickel	7440-02-0	730 N	73 N	NA	NA	NA	730	730	730	IDEM G-DCL
Potassium	7440-09-7	NA	NA	NA	NA	NA	NA	NA	NA	None
Selenium	7782-49-2	180 N	18 N	NA	NA	50	180	50	50	MCL
Silver	7440-22-4	180 N	18 N	NA	NA	NA	180	180	180	IDEM G-DCL
Sodium	7440-23-5	NA	NA	NA	NA	NA	NA	NA	NA	None
Thallium	7440-28-0	NA	NA	NA	NA	2	2.6	2	2	MCL
Vanadium	7440-62-2	180 N[15]	18 N[15]	NA	NA	NA	NA	NA	18	T-RSL
Zinc	7440-66-6	11000 N	1100 N	NA	NA	NA	11000	11000	11000	IDEM G-DCL

PSL selection for SWMU 26 is based on a hierarchy of the following criteria (as available), as identified at the top of this table: USEPA MCL, then IDEM G-DCL, then USEPA T-RSL.

Crane SWMU 26 Human Health Screening Criteria - Groundwater Samples

PSL Selection Hierarchy:			3			1		2		
Analyte	**CAS Number**	**EPA Regional Screening Level, Tap Water[1] (ug/L)**	**Adjusted EPA Regional Screening Level, Tap Water[2] (ug/L)**	**EPA Regional Screening Level, Vapor[1] (ug/L)**	**Adjusted EPA Regional Screening Level, Vapor[2] (ug/L)**	**EPA Maximum Contaminant Level (ug/L)[3]**	**IDEM GW[4] (ug/L)**	**IDEM GW Default Closure Level[4] (ug/L)**	**PSL (ug/L)**	**PSL Criteria**

Notes:

1 - The tapwater screening levels from the USEPA Regions 3, 6, and 9 Regional Screening Levels (T-RSLs) for Chemical Contaminants at Superfund Sites, November, 2010 available online at http://epa-prgs.ornl.gov/chemicals/index.shtml. The vapor screening levels (VAPOR) were calculated using USEPA guidance (November, 2002) and toxicity values from USEPA (November, 2010). The risk-based screening levels are based on a target hazard quotient of 1 for noncarcinogens (denoted with a "N" flag) or an incremental lifetime cancer risk (ILCR) of 1E-6 for carcinogens (denoted with a "C" flag).

2 - The USEPA T-RSL (November, 2010) and VAPOR (calculated using USEPA guidance [November, 2002] and toxicity criteria [November, 2010]) adjusted values from the risk-based screening level for noncarcinogens adjusted by dividing by 10, equivalent to a target hazard quotient of 0.1. The risk-based screening level for carcinogens is equivalent to an incremental lifetime cancer risk (ILCR) of 1E-6.

3 - USEPA Maximum Contaminant Levels (MCLs) from the 2009 Edition of the Drinking Water Standards and Health Advisories (USEPA, October 2009).
4 - Indiana Department of Environmental Management (IDEM) groundwater screening levels for direct contact and groundwater Default Closure Levels from IDEM RISC Technical Guide, January 31, 2006, Appendix 1, revised May 1, 2009.
5 - One tenth the noncarcinogenic value is less than the carinogenic value; therefore, the noncarcinogenic value is presented.
6 - Value is for 1,3-dichloropropene.
7 - Value is for xylene, mixture.
8 - Value is for 2,4-dinitrophenol.
9 - Value is for diethyl phthalate.
10 - Value is for acenapththene.
11 - Value is for pyrene.
12 - Value is for hexavalent chromium.
13 - Action level under Safe Drinking Water Act.
14 - Value is for mercuy, inorganic salts.
15 - Value is for vanadium and compounds.

Abbreviations:
NA - Not available or not applicable
N - Noncarcinogen
C - carcinogen