N62578.AR.000452
NCBC DAVISVILLE
5090.3a

Draft

IR Program Site 09, Allen Harbor Landfill Phase III Remedial Investigation for the Management of Migration Operable Unit

Volume II: Appendices A Through N

Naval Construction Battalion Center Davisville, Rhode Island

Contract No. N62472-92-D-1296
Contract Task Order No. 0032

Prepared for

Department of the Navy
Northern Division
Naval Facilities Engineering Command
10 Industrial Highway
Mail Stop No. 82
Lester, Pennsylvania 19113-2090

Prepared by

EA Engineering, Science, and Technology
11019 McCormick Road
Hunt Valley, Maryland 21031
(410) 584-7000

19 May 1995

29600.32

APPENDIX A

PHASE I AND II RI SAMPLING LOCATIONS AND ANALYTICAL SUMMARY TABLES

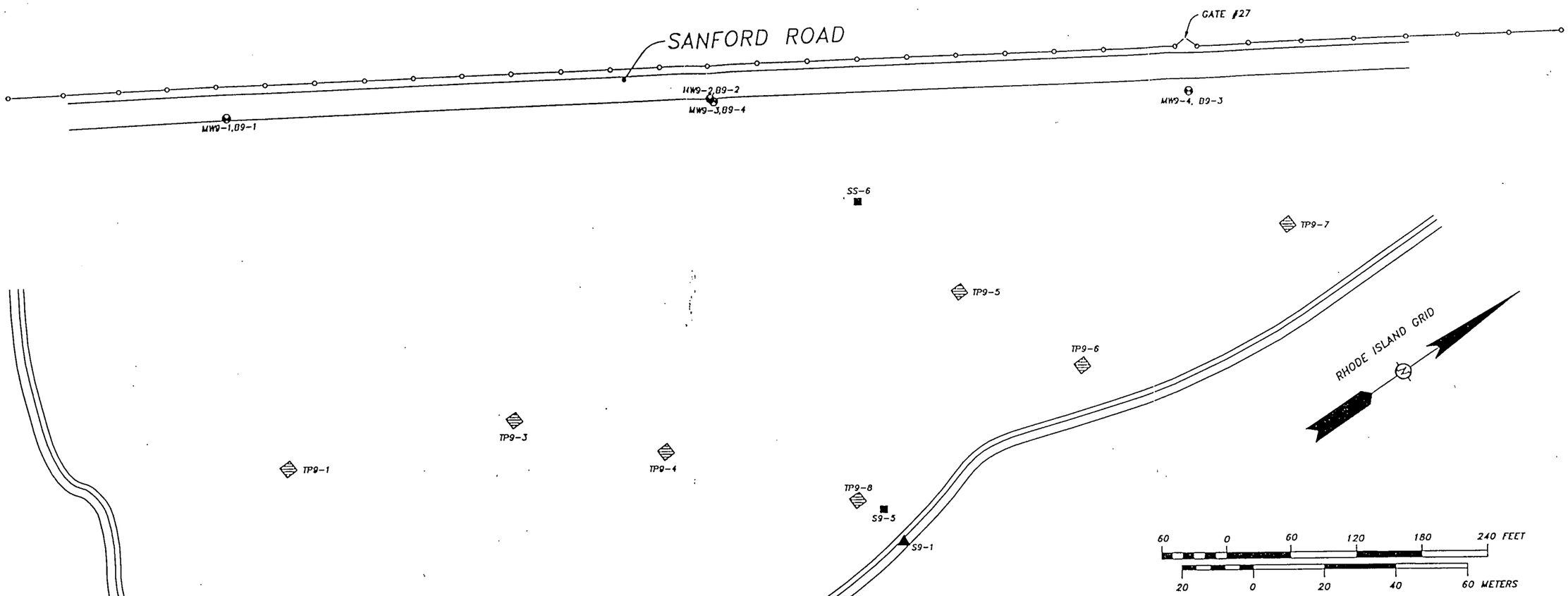

NOTES:

1. HORIZONTAL DATUM: RHODE ISLAND GRID, NAD 1927, 1969 ADJUSTMENT.
2. VERTICAL DATUM: NGVD 1929.

LEGEND:

- TEST PIT LOCATION
- SURFACE SOIL SAMPLE LOCATION
- SEDIMENT SEEP SAMPLE LOCATION
- MONITORING WELL/BORING LOCATION

ALLEN HARBOR

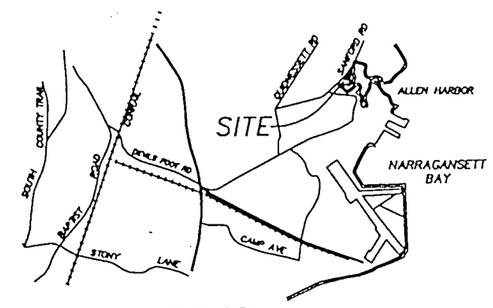

LOCUS

TRC
TRC Environmental Corporation

5 Waterside Crossing
Windsor, CT 06095
(203) 289-8631

NAVAL CONSTRUCTION BATTALION CENTER — DAVISVILLE, RHODE ISLAND

FIGURE 2-2.
SITE 09-ALLEN HARBOR LANDFILL
PHASE I SAMPLING LOCATIONS

Date: 10/93 | Project No. 01042-0050-400

00198

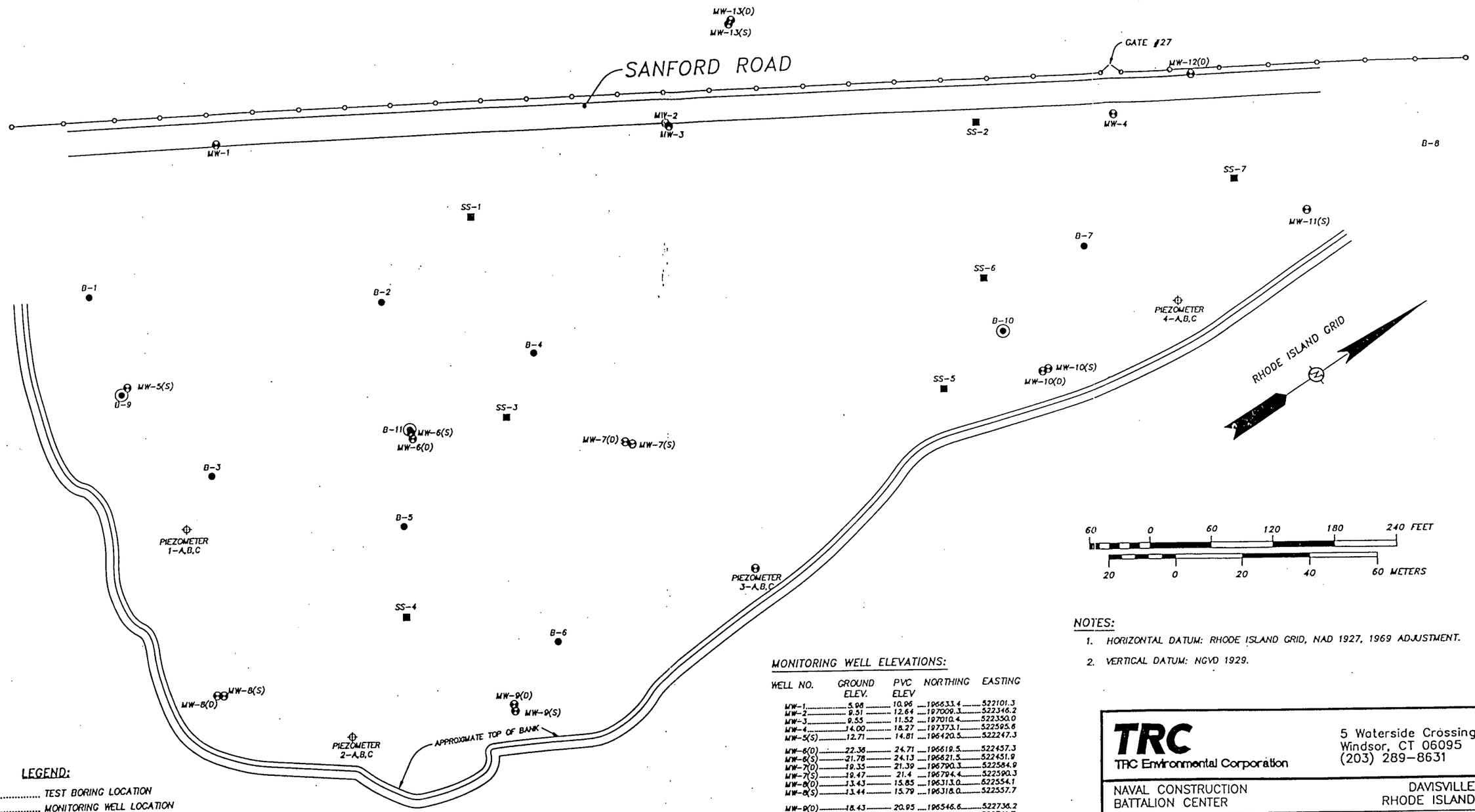

LEGEND:

- ..... TEST BORING LOCATION
- ..... MONITORING WELL LOCATION
- ..... SURFACE SOIL SAMPLE LOCATION
- (S)..... SHALLOW WELL
- (D)..... DEEP WELL
- ..... MULTI-LEVEL PIEZOMETER
- ..... SUPPLEMENTAL PHASE II RI TEST BORING LOCATION

MONITORING WELL ELEVATIONS:

WELL NO.	GROUND ELEV.	PVC ELEV	NORTHING	EASTING
MW-1	5.98	10.96	196633.4	522101.3
MW-2	9.51	12.64	197009.3	522346.2
MW-3	9.55	11.52	197010.4	522350.0
MW-4	14.00	18.27	197373.1	522595.6
MW-5(S)	12.71	14.81	196420.5	522247.3
MW-6(D)	22.36	24.71	196619.5	522457.3
MW-6(S)	21.78	24.13	196621.5	522451.9
MW-7(D)	19.35	21.39	196790.3	522584.9
MW-7(S)	19.47	21.4	196794.4	522590.3
MW-8(D)	13.43	15.85	196313.0	622554.1
MW-8(S)	13.44	15.79	196318.0	522557.7
MW-9(D)	18.43	20.95	196546.6	522736.2
MW-9(S)	18.46	20.83	196544.1	522741.7
MW-10(D)	19.25	21.49	197166.8	522764.2
MW-10(S)	18.80	21.37	197172.1	522765.2
MW-11(S)	12.35	14.63	197471.4	522783.0
MW-12(D)	13.53	13.10	197457.5	522609.8
MW-13(D)	6.47	9.28	197121.5	522298.9
MW-13(S)	6.31	8.84	197117.8	522300.7

NOTES:

1. HORIZONTAL DATUM: RHODE ISLAND GRID, NAD 1927, 1969 ADJUSTMENT.
2. VERTICAL DATUM: NGVD 1929.

TRC
TRC Environmental Corporation
5 Waterside Crossing
Windsor, CT 06095
(203) 289-8631

NAVAL CONSTRUCTION BATTALION CENTER — DAVISVILLE RHODE ISLAND

FIGURE 2-3.

SITE 09 – ALLEN HARBOR LANDFILL
PHASE II SAMPLING LOCATIONS

Date: 6/94 | Project No. 01042-0080-20

98M100

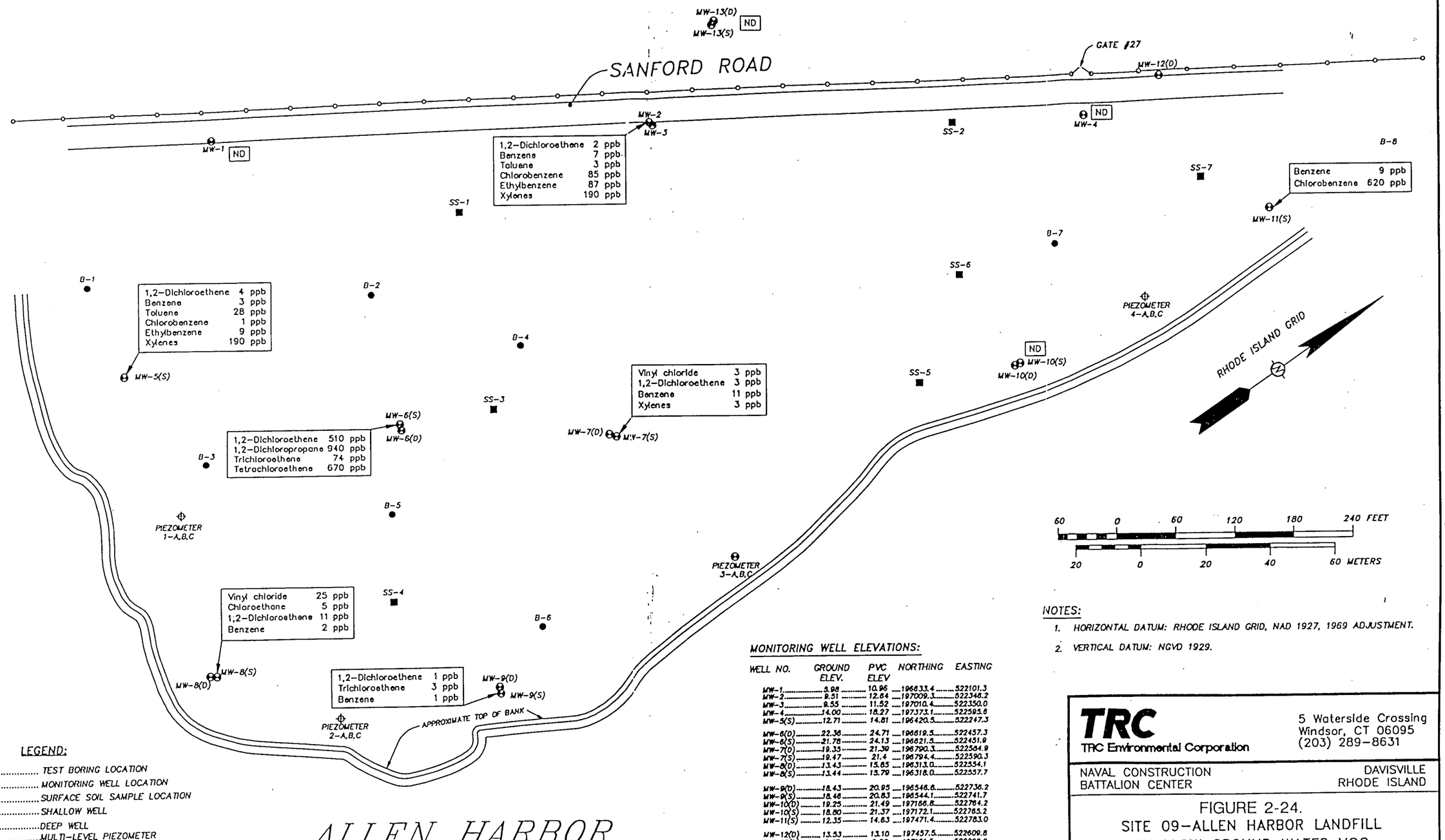

MONITORING WELL ELEVATIONS:

WELL NO.	GROUND ELEV.	PVC ELEV	NORTHING	EASTING
MW-1	8.98	10.96	196833.4	522101.3
MW-2	9.51	12.64	197009.3	522348.2
MW-3	9.55	11.52	197010.4	522350.0
MW-4	14.00	18.27	197373.1	522595.6
MW-5(S)	12.71	14.81	196420.5	522247.3
MW-6(D)	22.36	24.71	196619.5	522457.3
MW-6(S)	21.78	24.13	196621.5	522451.9
MW-7(D)	19.35	21.39	196790.3	522564.9
MW-7(S)	19.47	21.4	196794.4	522590.3
MW-8(D)	13.43	15.85	196313.0	522554.1
MW-8(S)	13.44	15.79	196318.0	522557.7
MW-9(D)	18.43	20.95	196546.6	522736.2
MW-9(S)	18.46	20.83	196544.1	522741.7
MW-10(D)	19.25	21.49	197166.8	522764.2
MW-10(S)	18.80	21.37	197172.1	522765.2
MW-11(S)	12.35	14.63	197471.4	522783.0
MW-12(D)	13.53	13.10	197457.5	522609.8
MW-13(D)	6.47	9.28	197121.5	522298.9
MW-13(S)	6.31	8.84	197117.8	522300.7

LEGEND:

- ● ..... TEST BORING LOCATION
- ⊖ ..... MONITORING WELL LOCATION
- ■ ..... SURFACE SOIL SAMPLE LOCATION
- (S) ..... SHALLOW WELL
- (D) ..... DEEP WELL
- ⊕ ..... MULTI-LEVEL PIEZOMETER
- ND ..... NON DETECTED

NOTES:

1. HORIZONTAL DATUM: RHODE ISLAND GRID, NAD 1927, 1969 ADJUSTMENT.
2. VERTICAL DATUM: NGVD 1929.

TRC
TRC Environmental Corporation
5 Waterside Crossing
Windsor, CT 06095
(203) 289-8631

NAVAL CONSTRUCTION BATTALION CENTER — DAVISVILLE RHODE ISLAND

FIGURE 2-24.
SITE 09-ALLEN HARBOR LANDFILL
SHALLOW GROUND WATER VOC
DISTRIBUTION MAP

Date: 10/93 | Project No. 01042-0050-400

001M86

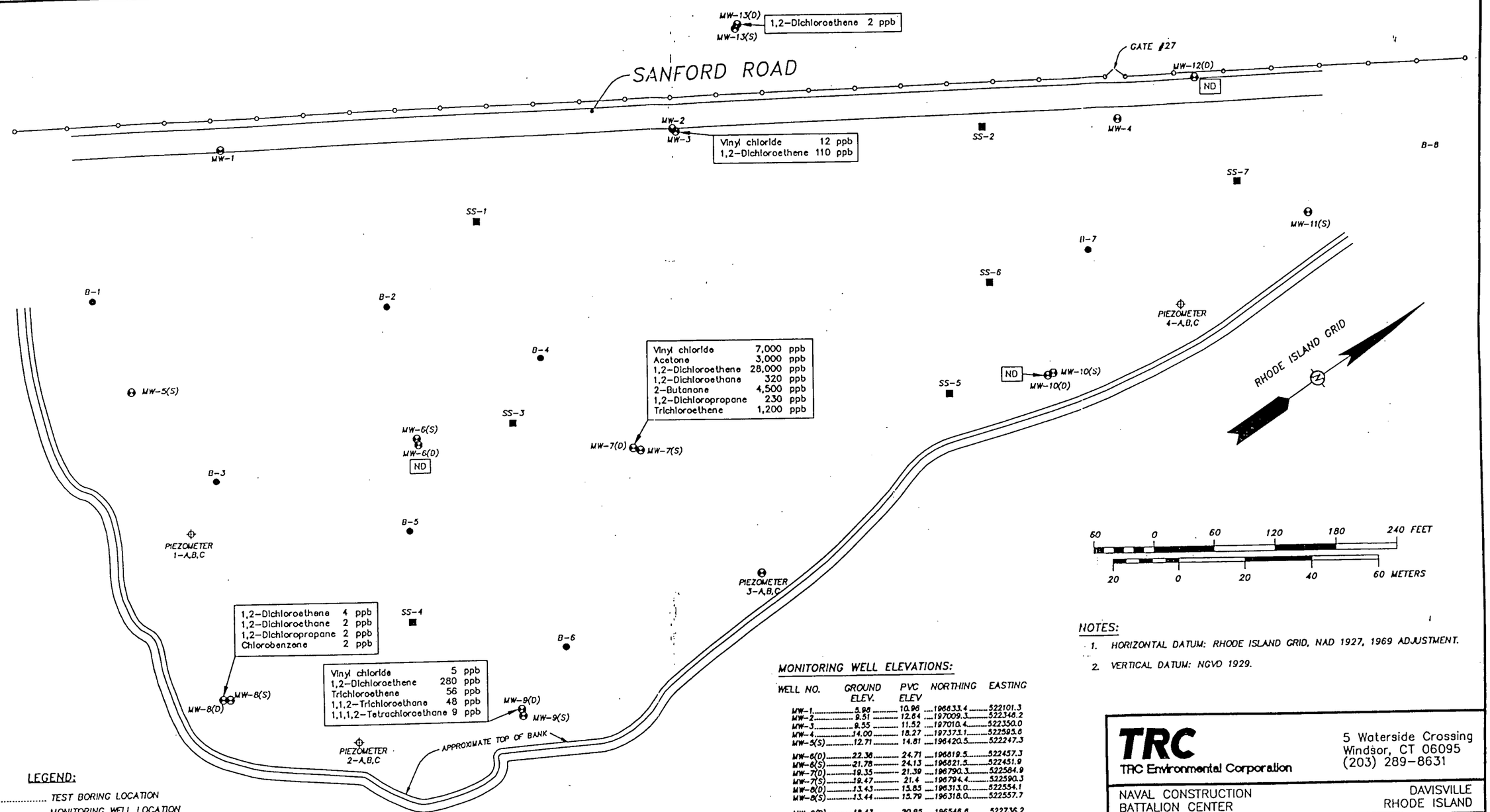

LEGEND:

- ● ..... TEST BORING LOCATION
- ⊖ ..... MONITORING WELL LOCATION
- ■ ..... SURFACE SOIL SAMPLE LOCATION
- (S) ..... SHALLOW WELL
- (D) ..... DEEP WELL
- ⊕ ..... MULTI-LEVEL PIEZOMETER
- ND ..... NON DETECTED

MONITORING WELL ELEVATIONS:

WELL NO.	GROUND ELEV.	PVC ELEV	NORTHING	EASTING
MW-1	8.98	10.96	196833.4	522101.3
MW-2	9.51	12.64	197009.3	522346.2
MW-3	9.55	11.52	197010.4	522350.0
MW-4	14.00	18.27	197373.1	522593.6
MW-5(S)	12.71	14.81	196420.5	522247.3
MW-6(D)	22.38	24.71	196819.5	522457.3
MW-6(S)	21.78	24.13	196821.5	522451.9
MW-7(D)	19.35	21.39	196790.3	522584.9
MW-7(S)	19.47	21.4	196794.4	522590.3
MW-8(D)	13.43	15.85	196313.0	522554.1
MW-8(S)	13.44	15.79	196318.0	522557.7
MW-9(D)	18.43	20.95	196546.6	522736.2
MW-9(S)	18.46	20.83	196544.1	522741.7
MW-10(D)	19.25	21.49	197166.8	522764.2
MW-10(S)	18.80	21.37	197172.1	522765.2
MW-11(S)	12.35	14.63	197471.4	522783.0
MW-12(D)	13.53	13.10	197457.5	522609.8
MW-13(D)	6.47	9.28	197121.5	522298.9
MW-13(S)	6.31	8.84	197117.8	522300.7

NOTES:

1. HORIZONTAL DATUM: RHODE ISLAND GRID, NAD 1927, 1969 ADJUSTMENT.
2. VERTICAL DATUM: NGVD 1929.

TRC
TRC Environmental Corporation

5 Waterside Crossing
Windsor, CT 06095
(203) 289-8631

NAVAL CONSTRUCTION BATTALION CENTER — DAVISVILLE, RHODE ISLAND

FIGURE 2-25.
SITE 09-ALLEN HARBOR LANDFILL
DEEP GROUND WATER VOC DISTRIBUTION MAP

Date: 10/93 | Project No. 01042-0050-400

001966

TABLE 2-23
NCBC DAVISVILLE
SITE 09 - ALLEN HARBOR LANDFILL
PHASE II RI
GROUNDWATER SUMMARY TABLE

Client ID:	09-MW1S	09-MW2S	09-MW3D	09-MW4S	09-MW5S	09-MW6S
Laboratory ID:	567001	567040	567004	566997	567002	566235
VOLATILE ORGANIC COMPOUNDS (ug/l)						
Vinyl chloride	–	–	12	–	–	–
Chloroethane	–	–	–	–	–	–
Acetone	–	–	–	–	–	–
1,2-Dichloroethene(Total)	–	2 J	110	–	4 J	510
1,2-Dichloroethane	–	–	–	–	–	–
2-Butanone	–	–	–	–	–	–
1,2-Dichloropropane	–	–	–	–	–	940
Trichloroethene	–	–	–	–	–	74
1,1,2-Trichloroethane	–	–	–	–	–	–
Benzene	–	7 J	–	–	3 J	–
Tetrachloroethene	–	–	–	–	–	670
1,1,2,2-Tetrachloroethane	–	–	–	–	–	–
Toluene	–	3 J	–	–	28	–
Chlorobenzene	–	85	–	–	1 J	–
Ethylbenzene	–	87	–	–	9 J	–
Xylenes (Total)	–	190	–	–	27	–
SEMIVOLATILE ORGANIC COMPOUNDS (ug/l)						
Phenol	–	–	–	–	–	66 J
bis(2-Chloroethyl)ether	–	2 J	4 J	–	–	–
2-Chlorophenol	–	–	–	–	–	–
1,3-Dichlorobenzene	–	–	–	–	–	–
1,4-Dichlorobenzene	–	5 J	–	–	–	–
1,2-Dichlorobenzene	–	–	–	–	–	–
2-Methylphenol	–	–	–	–	73	350
2,2'-Oxybis(1-chloropropane)	–	–	3 J	–	–	–
4-Methylphenol	–	–	–	–	210	370
N-Nitroso-di-n-propylamine	–	–	–	1 J	–	–
Hexachloroethane	–	3 J	–	–	–	–
2,4-Dimethylphenol	–	1 J	–	–	260	860
2,4-Dichlorophenol	–	–	–	–	–	–
1,2,4-Trichlorobenzene	–	–	–	–	–	–
Naphthalene	–	13	–	–	47	–
2-Methylnaphthalene	–	4 J	–	–	25	–
Acenaphthene	–	–	–	–	66	–
4-Nitrophenol	–	–	–	1 J	–	–
Dibenzofuran	–	–	–	–	24	–
Diethyl phthalate	–	–	–	–	–	–
Fluorene	–	–	–	–	23	–
4-Nitroaniline	–	–	–	–	–	–
Pentachlorophenol	–	–	–	–	–	–
Phenanthrene	–	–	–	–	21	–
Anthracene	–	–	–	–	22	–
Carbazole	–	–	–	–	–	–
Di-n-butyl phthalate	–	1 J	–	–	–	–
Fluoranthene	–	–	–	–	2 J	–
Pyrene	–	–	–	–	3 J	–

– = NON-DETECT
J = ESTIMATED CONCENTRATION

TABLE 2-23
NCBC DAVISVILLE
SITE 09 - ALLEN HARBOR LANDFILL
PHASE II RI
GROUNDWATER SUMMARY TABLE

Client ID:	09-MW1S	09-MW2S	09-MW3D	09-MW4S	09-MW5S	09-MW6S
Laboratory ID:	567001	567040	567004	566997	567002	566235
PESTICIDES/PCBS (µg/l)						
Dieldrin	–	–	–	–	–	0.0021 J
4,4'-DDD	–	–	–	–	–	–
Alpha chlordane	–	–	–	–	0.012 J	–
INORGANICS (µg/l)						
Aluminum	–	355 J	–	105 J	55.8 J	–
Antimony	–	–	–	–	–	47.4
Arsenic	–	7.5 J	–	–	7.5 J	5.1 J
Barium	7.9	27.5	73.3	3.3	164	753
Cadmium	–	–	–	–	–	–
Calcium	114000	77800	23600	5810	95900	140000
Chromium	–	–	–	–	–	–
Cobalt	–	–	–	–	–	–
Copper	–	8.2	–	–	6.3	4.2
Iron	20600	12400	3050	137	25500	23800
Lead	–	–	–	–	–	–
Magnesium	14900	13000	17800	663	18400	60700
Manganese	233	284	810	4.3	409	662
Nickel	–	–	–	–	–	–
Potassium	12800	10600	14600	1960	17700	38500
Silver	–	–	–	–	–	0.54 J
Sodium	10400	12000	63800	4440	32400	50800
Thallium	–	–	–	–	3.9 J	–
Vanadium	–	–	–	–	–	–
Zinc	–	56.5 J	–	–	–	–
Cyanide	–	–	–	–	–	–

– = NON-DETECT
J = ESTIMATED CONCENTRATION

TABLE 2-23
NCBC DAVISVILLE
SITE 09 - ALLEN HARBOR LANDFILL
PHASE II RI
GROUNDWATER SUMMARY TABLE

Client ID:	09-MW6D	09-MW7S	09-MW15S	09-MW7D	09-MW8S	09-MW8D
Laboratory ID:	566232	567035	Dup of MW7S	566243	566242	567036
VOLATILE ORGANIC COMPOUNDS (ug/l)						
Vinyl chloride	–	3 J	4 J	7000	25	–
Chloroethane	–	–	–	–	5 J	–
Acetone	–	–	–	3000	–	–
1,2-Dichloroethene(Total)	–	3 J	3 J	28000	11	4 J
1,2-Dichloroethane	–	–	–	320 J	–	2 J
2-Butanone	–	–	–	4500	–	–
1,2-Dichloropropane	–	–	–	230 J	–	2 J
Trichloroethene	–	–	–	1200 J	–	–
1,1,2-Trichloroethane	–	–	–	–	–	–
Benzene	–	11	10	–	2 J	–
Tetrachloroethene	–	–	–	–	–	–
1,1,2,2-Tetrachloroethane	–	–	–	–	–	–
Toluene	–	–	–	–	–	–
Chlorobenzene	–	–	–	–	–	2 J
Ethylbenzene	–	–	–	–	–	–
Xylenes (Total)	–	3 J	3 J	–	–	–
SEMIVOLATILE ORGANIC COMPOUNDS (ug/l)						
Phenol	–	–	–	–	–	–
bis(2-Chloroethyl)ether	–	1 J	1 J	14 J	–	–
2-Chlorophenol	–	–	–	–	–	–
1,3-Dichlorobenzene	–	–	–	–	–	–
1,4-Dichlorobenzene	–	–	–	–	–	–
1,2-Dichlorobenzene	–	1 J	–	–	–	–
2-Methylphenol	–	–	–	–	–	–
2,2'-Oxybis(1-chloropropane)	–	–	–	–	–	–
4-Methylphenol	–	–	–	–	–	–
N-Nitroso-di-n-propylamine	–	–	–	–	–	–
Hexachloroethane	–	–	–	–	–	–
2,4-Dimethylphenol	–	10	9 J	16 J	–	–
2,4-Dichlorophenol	–	–	–	–	–	–
1,2,4-Trichlorobenzene	–	–	–	–	–	–
Naphthalene	–	29	23	–	–	–
2-Methylnaphthalene	–	14	11	–	–	–
Acenaphthene	–	5 J	4 J	–	–	–
4-Nitrophenol	–	–	–	–	–	–
Dibenzofuran	–	2 J	1 J	–	–	–
Diethyl phthalate	–	–	–	–	–	–
Fluorene	–	3 J	–	–	–	–
4-Nitroaniline	–	–	2 J	–	–	–
Pentachlorophenol	–	2 J	–	–	–	–
Phenanthrene	–	–	–	–	–	–
Anthracene	–	–	–	–	–	–
Carbazole	–	11	10	–	–	–
Di-n-butyl phthalate	–	–	–	–	–	–
Fluoranthene	–	–	–	–	–	–
Pyrene	–	–	–	–	–	–

– = NON-DETECT
J = ESTIMATED CONCENTRATION

TABLE 2-23
NCBC DAVISVILLE
SITE 09 - ALLEN HARBOR LANDFILL
PHASE II RI
GROUNDWATER SUMMARY TABLE

Client ID:	09-MW6D	09-MW7S	09-MW15S	09-MW7D	09-MW8S	09-MW8D
Laboratory ID:	566232	567035	Dup of MW7S	566243	566242	567036
PESTICIDES/PCBS (µg/l)						
Dieldrin	–	–	–	–	–	–
4,4'-DDD	–	–	–	–	–	–
Alpha chlordane	–	–	–	–	–	–
INORGANICS (µg/l)						
Aluminum	2040	–	44 J	–	–	807 J
Antimony	–	–	–	–	35.5	–
Arsenic	–	16.3 J	13.5 J	5.5	–	5.4 J
Barium	36.5	39.6	41.8	278	76.9	85.8
Cadmium	0.28 J	–	–	–	–	–
Calcium	11300	80300	80800	127000	70800	78900
Chromium	–	–	–	–	–	–
Cobalt	–	–	–	–	–	–
Copper	7.1	–	–	–	–	4.1
Iron	7460	12500	12700	47300	1540	12700
Lead	2.9 J	2.7 J	3 J	–	–	–
Magnesium	4170	37700	38000	57500	36200	18300
Manganese	917	172	177	1420	600	889
Nickel	–	–	–	–	–	–
Potassium	2570	28100	28500	6840	29500	5120
Silver	–	–	–	0.71 J	0.36 J	–
Sodium	13500	25500	26300	230000	200000	83100
Thallium	–	–	–	–	–	–
Vanadium	–	–	–	–	–	–
Zinc	56.7	–	–	11	28	65.4 J
Cyanide		–	–	–	–	–

– NON-DETECT
J = ESTIMATED CONCENTRATION

TABLE 2-23
NCBC DAVISVILLE
SITE 09 - ALLEN HARBOR LANDFILL
PHASE II RI
GROUNDWATER SUMMARY TABLE

Client ID:	09-MW9S	09-MW9D	09-MW10S	09-MW10D	09-MW11S	09-MW12D
Laboratory ID:	566238	566244	567003	567005	567000	574044
VOLATILE ORGANIC COMPOUNDS (ug/l)						
Vinyl chloride	–	5 J	–	–	–	–
Chloroethane	–	–	–	–	–	–
Acetone	–	–	–	–	–	–
1,2-Dichloroethene(Total)	1 J	280	–	–	–	–
1,2-Dichloroethane	–	–	–	–	–	–
2-Butanone	–	–	–	–	–	–
1,2-Dichloropropane	–	–	–	–	–	–
Trichloroethene	3 J	56	–	–	–	–
1,1,2-Trichloroethane	–	48	–	–	–	–
Benzene	1 J	–	–	–	9 J	–
Tetrachloroethene	–	–	–	–	–	–
1,1,2,2-Tetrachloroethane	–	9 J	–	–	–	–
Toluene	–	–	–	–	–	–
Chlorobenzene	–	–	–	–	620	–
Ethylbenzene	–	–	–	–	–	–
Xylenes (Total)	–	–	–	–	–	–
SEMIVOLATILE ORGANIC COMPOUNDS (ug/l)						
Phenol	–	2 J	–	–	–	–
bis(2-Chloroethyl)ether	–	–	–	–	–	–
2-Chlorophenol	–	–	–	–	3 J	–
1,3-Dichlorobenzene	–	–	–	–	83	–
1,4-Dichlorobenzene	–	–	–	–	420	–
1,2-Dichlorobenzene	–	–	–	–	8 J	–
2-Methylphenol	–	–	–	–	–	–
2,2'-Oxybis(1-chloropropane)	–	–	2 J	–	–	–
4-Methylphenol	–	–	–	–	–	–
N-Nitroso-di-n-propylamine	–	–	–	–	–	–
Hexachloroethane	–	–	–	–	–	–
2,4-Dimethylphenol	–	–	–	–	–	–
2,4-Dichlorophenol	–	–	–	–	4 J	–
1,2,4-Trichlorobenzene	–	–	–	–	8 J	–
Naphthalene	1 J	–	–	–	1 J	–
2-Methylnaphthalene	–	–	–	–	–	–
Acenaphthene	–	–	–	–	–	–
4-Nitrophenol	–	–	–	–	–	3 J
Dibenzofuran	–	–	–	–	–	–
Diethyl phthalate	–	2 J	–	–	–	–
Fluorene	–	–	–	–	–	–
4-Nitroaniline	–	–	–	–	–	–
Pentachlorophenol	–	–	–	–	–	–
Phenanthrene	–	–	–	–	–	–
Anthracene	–	–	–	–	–	–
Carbazole	–	–	–	–	–	–
Di-n-butyl phthalate	–	–	–	–	–	–
Fluoranthene	–	–	–	–	–	–
Pyrene	–	–	–	–	–	–

– = NON-DETECT
J = ESTIMATED CONCENTRATION

TABLE 2-23
NCBC DAVISVILLE
SITE 09 - ALLEN HARBOR LANDFILL
PHASE II RI
GROUNDWATER SUMMARY TABLE

Client ID:	09-MW9S	09-MW9D	09-MW10S	09-MW10D	09-MW11S	09-MW12D
Laboratory ID:	566238	566244	567003	567005	567000	574044
PESTICIDES/PCBS (µg/l)						
Dieldrin	0.0024 J	0.0024 J	–	–	–	–
4,4'-DDD	0.0037 J	–	–	–	–	–
Alpha chlordane	–	–	–	–	–	–
INORGANICS (µg/l)						
Aluminum	170	7240	50.2 J	516 J	–	72.8
Antimony	–	–	–	–	–	–
Arsenic	–	–	–	–	–	–
Barium	501	87.5	130	42.2	31.7	25.5
Cadmium	–	–	–	–	–	0.22 J
Calcium	95600	47600	81200	27500	52000	15600
Chromium	8.7	26.3	–	–	–	–
Cobalt	–	–	–	–	–	43.4
Copper	–	13.2	–	7.8	4.1	–
Iron	14100	16800	12500	1110	6510	3540
Lead	–	2.8	–	3.6 J	–	–
Magnesium	60500	30000	45200	4620	3980	2910
Manganese	791	1160	275	500	713	546
Nickel	–	–	–	–	–	–
Potassium	37400	9840	28700	5570	8020	3720
Silver	–	–	–	–	–	–
Sodium	53000	119000	89000	16200	6380	21900
Thallium	–	–	3.3 J	–	–	–
Vanadium	–	8.9	–	–	–	–
Zinc	–	–	–	55.3 J	–	32
Cyanide	–	–	–	6.2	–	–

– = NON-DETECT
J = ESTIMATED CONCENTRATION

TABLE 2-23
NCBC DAVISVILLE
SITE 09 - ALLEN HARBOR LANDFILL
PHASE II RI
GROUNDWATER SUMMARY TABLE

Client ID:	09-MW13S	09-MW13D
Laboratory ID:	567266	567264
VOLATILE ORGANIC COMPOUNDS (ug/l)		
Vinyl chloride	--	--
Chloroethane	--	--
Acetone	--	--
1,2-Dichloroethene(Total)	--	2 J
1,2-Dichloroethane	--	--
2-Butanone	--	--
1,2-Dichloropropane	--	--
Trichloroethene	--	--
1,1,2-Trichloroethane	--	--
Benzene	--	--
Tetrachloroethene	--	--
1,1,2,2-Tetrachloroethane	--	--
Toluene	--	--
Chlorobenzene	--	--
Ethylbenzene	--	--
Xylenes (Total)	--	--
SEMIVOLATILE ORGANIC COMPOUNDS (ug/l)		
Phenol	--	--
bis(2-Chloroethyl)ether	--	--
2-Chlorophenol	--	--
1,3-Dichlorobenzene	--	--
1,4-Dichlorobenzene	--	--
1,2-Dichlorobenzene	--	--
2-Methylphenol	--	--
2,2'-Oxybis(1-chloropropane)	--	--
4-Methylphenol	--	--
N-Nitroso-di-n-propylamine	--	--
Hexachloroethane	--	--
2,4-Dimethylphenol	--	--
2,4-Dichlorophenol	--	--
1,2,4-Trichlorobenzene	--	--
Naphthalene	--	--
2-Methylnaphthalene	--	--
Acenaphthene	--	--
4-Nitrophenol	--	--
Dibenzofuran	--	--
Diethyl phthalate	--	2 J
Fluorene	--	--
4-Nitroaniline	--	--
Pentachlorophenol	--	--
Phenanthrene	--	--
Anthracene	--	--
Carbazole	--	--
Di-n-butyl phthalate	--	--
Fluoranthene	--	--
Pyrene	--	--

-- = NON-DETECT
J = ESTIMATED CONCENTRATION

TABLE 2-23
NCBC DAVISVILLE
SITE 09 - ALLEN HARBOR LANDFILL
PHASE II RI
GROUNDWATER SUMMARY TABLE

Client ID:	09-MW13S	09-MW13D
Laboratory ID:	567266	567264
PESTICIDES/PCBS (µg/l)		
Dieldrin	–	–
4,4'-DDD	–	–
Alpha chlordane	–	–
INORGANICS (µg/l)		
Aluminum	331 J	649 J
Antimony	–	–
Arsenic	–	–
Barium	12.3	11.9
Cadmium	–	–
Calcium	10600	18600
Chromium	–	–
Cobalt	13.9	–
Copper	–	–
Iron	2710	2450
Lead	–	–
Magnesium	3060	3080
Manganese	368	307
Nickel	18.6	–
Potassium	–	2660
Silver	–	–
Sodium	6070	10800
Thallium	–	–
Vanadium	–	–
Zinc	142 J	49.2 J
Cyanide	–	–

– = NON-DETECT
J = ESTIMATED CONCENTRATION

TABLE 2-19
NCBC DAVISVILLE
SITE 09 - ALLEN HARBOR LANDFILL
SUBSURFACE SOIL SUMMARY TABLE

Client ID: Sample Depth (ft):	09-B1-07 (12-14)	09-B2-03 (4-6)	09-B3-03 (4-6)	09-B4-05 (8-10)	09-B5-06 (10-12)	09-B6-07 (12-14)
VOLATILE ORGANIC COMPOUNDS (ug/Kg)						
Vinyl chloride	–	–	–	–	–	–
Acetone	–	130 J	–	–	51 J	180 J
1,2-Dichloroethene(Total)	–	–	–	–	–	–
2-Butanone	–	–	–	–	–	–
1,1,1-Trichloroethane	–	–	–	–	–	–
Trichloroethene	–	–	–	–	–	–
Benzene	–	–	–	–	–	–
Tetrachloroethene	–	–	–	–	–	–
Toluene	–	–	–	–	–	–
Chlorobenzene	–	–	–	2 J	–	–
Ethylbenzene	–	–	–	2 J	1 J	–
Xylenes (Total)	–	–	1 J	5 J	1 J	–
SEMIVOLATILE ORGANIC COMPOUNDS (ug/Kg)						
Phenol	–	–	–	–	–	–
1,3-Dichlorobenzene	–	–	–	–	–	–
1,4-Dichlorobenzene	–	–	–	–	–	90 J
1,2-Dichlorobenzene	–	–	–	–	–	–
2-Methylphenol	–	–	–	–	–	–
2,2'-Oxybis(1-chloropropane)	–	–	–	–	–	–
4-Methylphenol	–	–	–	–	–	280 J
2,4-Dimethylphenol	–	–	–	–	–	–
Naphthalene *	–	–	860	150 J	1600	90 J
2-Methylnaphthalene *	–	–	2700	–	5000	60 J
Dimethyl phthalate	–	–	–	–	–	–
Acenaphthylene *	–	–	–	–	100 J	–
Acenaphthene *	–	–	150 J	130 J	–	–
Dibenzofuran	–	–	95 J	–	140 J	47 J
Diethyl phthalate	–	–	–	–	–	–
Fluorene *	–	–	160 J	160 J	230 J	43 J
N-Nitrosodiphenylamine(1)	–	–	–	120 J	–	–
Phenanthrene *	170 J	–	850	900 J	1000	150 J
Anthracene *	–	–	200 J	230 J	220 J	39 J
Carbazole	–	–	130 J	–	–	–
Di-n-butyl phthalate	–	52 J	–	–	–	53 J
Fluoranthene *	240 J	–	1500	1000 J	1200	180 J
Pyrene *	180 J	–	850	820 J	860	170 J
Butyl benzyl phthalate	270 J	–	200 J	290 J	–	–
Benzo(a)anthracene **	140 J	–	690	580 J	600 J	140 J
Chrysene **	130 J	–	500	530 J	650 J	150 J
bis(2-Ethylhexyl)phthalate	150 J	–	680	10000 J	710	910
Di-n-octyl phthalate	–	–	–	–	–	–
Benzo(b)fluoranthene **	160 J	–	970	940 J	940 J	310 J
Benzo(k)fluoranthene **	160 J	–	970	940 J	940 J	310 J
Benzo(a)pyrene **	72 J	–	470	450 J	510 J	100 J
Indeno(1,2,3-cd)pyrene **	–	–	340 J	–	150 J	100 J
Dibenzo(a,h)anthracene **	–	–	90 J	–	172 J	–
Benzo(g,h,i)perylene **	–	–	280 J	–	–	96 J
TOTAL SVOCs:	1672	52	12685	17240	15022	3318
TOTAL PAHs:	1082	0	10930	6160	13392	1827
TOTAL CaPAHs:	662	0	4310	3440	3962	1206

– = NON-DETECT
J = ESTIMATED CONCENTRATION

* - Polynuclear Aromatic Hydrocarbon (PAH)
** - Carcinogenic Polynuclear Aromatic Hydrocarbon (CaPAH)

TABLE 2-19
NCBC DAVISVILLE
SITE 09 - ALLEN HARBOR LANDFILL
SUBSURFACE SOIL SUMMARY TABLE

Client ID: Sample Depth (ft):	09-B1-07 (12-14)	09-B2-03 (4-6)	09-B3-03 (4-6)	09-B4-05 (8-10)	09-B5-06 (10-12)	09-B6-07 (12-14)
PESTICIDES/PCBS (µg/kg)						
Alpha-BHC	–	–	0.98 J	–	–	–
Beta-BHC	–	–	–	–	–	–
Delta-BHC	–	–	–	0.063 J	0.25 J	–
Heptachlor	–	–	–	–	–	–
Aldrin	–	–	–	–	–	–
Heptachlor epoxide	–	–	–	–	–	–
Endosulfan I	–	–	–	–	1.7 J	1.9 J
Dieldrin	–	–	–	0.36 J	0.76 J	–
4,4'-DDE	0.19 J	–	890 J	2.5 J	15	7.5 J
Endrin	–	–	–	1.4 J	–	–
Endosulfan II	–	–	–	0.4 J	–	–
4,4'-DDD	0.47 J	–	17	9.2 J	140 J	45 J
Endosulfan Sulfate	–	–	–	–	–	–
4,4'-DDT	–	–	17 J	5.7	4.9 J	–
p,p'-Methoxychlor	–	–	–	–	–	–
Endrin ketone	–	–	–	3.5 J	–	–
Endrin aldehyde	–	–	–	–	–	–
Alpha chlordane	0.74 J	–	13 J	2.2 J	1.2 J	–
Gamma chlordane	–	–	0.85 J	1.7 J	2.1 J	0.66 J
PCB-1254	–	–	–	–	–	–
PCB-1260	–	–	–	–	92 J	990 J
INORGANICS (mg/kg)						
Aluminum	10900	3060	6330	6730	3970	10300
Antimony	–	–	–	–	–	18.9 J
Arsenic	2 J	2.4	2.5 J	9.7	2.1	17.2
Barium	24.2	9.1	39.3	26.7	39.4	258
Beryllium	0.48	–	–	–	0.52	5.4
Cadmium	0.1	0.31 J	6.4 J	9.1 J	6.1 J	14.3 J
Calcium	568	347	3240	1090	2510	7480
Chromium	12.6 J	4.2	20.8 J	16.5	13.3	169
Cobalt	5.4	2.6	5.6	4.2	4.4	73
Copper	17.6 J	7.4	76.5 J	17.5	52.8	1560
Iron	16600	8920	14200	12800	14400	77000
Lead	7.5	9.9	89.6 J	34.3 J	90.8 J	839 J
Magnesium	3220	1190	1790	1170	1410	3430
Manganese	142 J	72 J	149 J	97.7 J	136 J	554 J
Mercury	3.7	–	–	0.14	0.13	191
Nickel	13.1	–	11.5	10.1	12.8	181
Potassium	767	–	547	879	877	1080
Selenium	–	–	–	–	–	2 J
Silver	0.14 J	–	0.62 J	–	0.88 J	5.3 J
Sodium	100	–	122	–	–	1030
Vanadium	16.9	19.2	12.6	9.6	17.2	45.8
Zinc	38.1 J	19.5	229 J	104	298	6700
Cyanide	–	–	–	–	–	–
DIOXIN/FURANS (µg/kg)						
Total 2,3,7,8-TCDD Toxicity Equivalents	N/A	N/A	N/A	N/A	N/A	N/A

– = NON-DETECT
J = ESTIMATED CONCENTRATION

TABLE 2-19
NCBC DAVISVILLE
SITE 09 - ALLEN HARBOR LANDFILL
SUBSURFACE SOIL SUMMARY TABLE

Client ID: Sample Depth (ft):	09-B7-04 (6-8)	09-B7-06 (10-12)	09-B8-04 (6-8)	09-B8-06 (10-12)	09-MW5-04 (6-8)	09-MW5-06 (10-12)
VOLATILE ORGANIC COMPOUNDS (ug/Kg)						
Vinyl chloride	–	–	–	–	–	–
Acetone	–	–	100 J	58 J	–	–
1,2-Dichloroethene(Total)	–	–	–	–	–	–
2-Butanone	–	–	–	–	–	–
1,1,1-Trichloroethane	–	–	–	–	–	3 J
Trichloroethene	–	–	–	–	–	2 J
Benzene	–	–	–	–	–	3 J
Tetrachloroethene	–	–	–	–	2 J	–
Toluene	–	–	4 J	–	–	82
Chlorobenzene	–	190 J	–	42	–	2 J
Ethylbenzene	–	220 J	190	–	–	38
Xylenes (Total)	20 J	4500 J	4400	2 J	–	110
SEMIVOLATILE ORGANIC COMPOUNDS (ug/Kg)						
Phenol	–	–	–	–	–	–
1,3-Dichlorobenzene	–	–	–	62 J	–	–
1,4-Dichlorobenzene	97 J	180 J	–	110 J	–	–
1,2-Dichlorobenzene	59 J	–	–	–	–	–
2-Methylphenol	58 J	–	–	–	–	–
2,2'-Oxybis(1-chloropropane)	–	–	–	–	–	–
4-Methylphenol	200 J	–	–	–	–	2300 J
2,4-Dimethylphenol	–	–	–	–	–	4800 J
Naphthalene *	1000	1700	1400	120 J	2500 J	260000 J
2-Methylnaphthalene *	3900 J	1300	3300	77 J	1100 J	78000 J
Dimethyl phthalate	–	–	–	–	–	–
Acenaphthylene *	–	–	–	–	–	3000 J
Acenaphthene *	290 J	–	220 J	–	4600 J	150000 J
Dibenzofuran	310 J	–	160 J	–	2800 J	120000 J
Diethyl phthalate	44 J	–	–	–	–	–
Fluorene *	370 J	180 J	300 J	–	5400 J	270000 J
N-Nitrosodiphenylamine(1)	–	–	–	–	–	–
Phenanthrene *	2000	–	1100	–	40000	1200000 J
Anthracene *	420	540 J	290 J	–	9000	340000 J
Carbazole	270 J	–	230 J	–	5500 J	160000 J
Di-n-butyl phthalate	390 J	350 J	380 J	–	–	–
Fluoranthene *	2700	130 J	1500	–	45000	1000000 J
Pyrene *	1500	110 J	900	–	38000	660000 J
Butyl benzyl phthalate	160 J	–	–	–	–	–
Benzo(a)anthracene **	1100	–	640 J	–	21000	420000 J
Chrysene **	1200	–	640 J	–	17000	320000 J
bis(2-Ethylhexyl)phthalate	2800	1100	5600 B	97 J	–	–
Di-n-octyl phthalate	–	–	–	–	–	–
Benzo(b)fluoranthene **	1900 J	–	1300 J	–	31000	490000 J
Benzo(k)fluoranthene **	1900 J	–	1300 J	–	31000	490000 J
Benzo(a)pyrene **	610	–	520 J	–	14000	150000 J
Indeno(1,2,3-cd)pyrene **	–	–	170 J	–	8900	79000 J
Dibenzo(a,h)anthracene **	–	–	–	–	2800 J	29000 J
Benzo(g,h,i)perylene **	–	–	–	–	9800	86000 J
TOTAL SVOCs:	23278	5590	19950	466	289400	6312100
TOTAL PAHs:	17310	4500	12770	197	250100	5165000
TOTAL CaPAHs:	6710	0	4570	0	135500	2064000

– = NON-DETECT
J = ESTIMATED CONCENTRATION

* - Polynuclear Aromatic Hydrocarbon (PAH)
** - Carcinogenic Polynuclear Aromatic Hydrocarbon (CaPAH)

TABLE 2-19
NCBC DAVISVILLE
SITE 09 - ALLEN HARBOR LANDFILL
SUBSURFACE SOIL SUMMARY TABLE

Client ID: Sample Depth (ft):	09-B7-04 (6-8)	09-B7-06 (10-12)	09-B8-04 (6-8)	09-B8-06 (10-12)	09-MW5-04 (6-8)	09-MW5-06 (10-12)
PESTICIDES/PCBS (µg/kg)						
Alpha-BHC	–	–	–	–	0.11 J	0.75 J
Beta-BHC	–	–	–	–	–	–
Delta-BHC	–	–	–	–	–	–
Heptachlor	–	–	–	–	–	–
Aldrin	2.9 J	0.31 J	–	–	2.4 J	–
Heptachlor epoxide	–	0.52 J	–	–	–	–
Endosulfan I	2.9 J	–	–	–	–	–
Dieldrin	12 J	–	–	–	0.45 J	38 J
4,4'-DDE	11 J	–	71	–	–	–
Endrin	–	0.85 J	–	0.34 J	–	97 J
Endosulfan II	–	–	72 J	–	–	–
4,4'-DDD	23 J	1 J	320	0.16 J	110 J	620 J
Endosulfan Sulfate	–	4.2 J	–	–	–	–
4,4'-DDT	–	–	66 J	0.15 J	66	–
p,p'-Methoxychlor	–	–	8 J	–	–	–
Endrin ketone	–	–	–	–	–	–
Endrin aldehyde	–	2.1 J	–	–	–	9.5 J
Alpha chlordane	1.5 J	39	–	–	10 J	20 J
Gamma chlordane	3.2 J	36 J	–	–	5.9 J	2.6 J
PCB-1254	–	–	–	–	–	–
PCB-1260	1700	–	1500	–	770	–
INORGANICS (mg/kg)						
Aluminum	11300	4890	3310	4880	6240	5700
Antimony	33.4 J	–	–	–	–	–
Arsenic	7.3	2	4.6	–	4.6	5.3
Barium	248	15.9	25	8.9	81.9	60.6
Beryllium	0.89	–	0.84	–	3.6	0.51
Cadmium	14.5 J	0.1 J	6.6 J	–	7.2 J	10.5 J
Calcium	12700	526	1590	289	21500	3910
Chromium	49.4	6.1	20.5	7.2	24.9 J	34.8 J
Cobalt	15	4	7.4	3.7	21.4	10.7
Copper	232	9	84.9	–	333	911
Iron	29400	11300	6850	5390	21800 J	38000 J
Lead	2130 J	10.5	67.3 J	3.9	271	133
Magnesium	5990	1510	594	1330	1770	2580
Manganese	473 J	120 J	62.3 J	51.7 J	252 J	287 J
Mercury	0.42	–	0.16	–	0.41	0.44
Nickel	48.4	–	16.2	–	74.5	21.1
Potassium	1620	–	–	–	543	889
Selenium	–	–	–	–	–	–
Silver	5.5 J	–	1.4 J	–	1.1 J	0.81
Sodium	2640	–	–	–	331	165
Vanadium	47.6	6.7	16.8	6.5	14.8 J	4.7
Zinc	3080	24.7	582	17.4	1640	627
Cyanide	–	–	–	–	–	–
DIOXIN/FURANS (µg/kg)						
Total 2,3,7,8-TCDD Toxicity Equivalents	N/A	N/A	N/A	N/A	N/A	N/A

– = NON-DETECT
J = ESTIMATED CONCENTRATION

TABLE 2-19
NCBC DAVISVILLE
SITE 09 - ALLEN HARBOR LANDFILL
SUBSURFACE SOIL SUMMARY TABLE

Client ID: Sample Depth (ft):	09-MW6-08 (14-16)	09-MW7-02 (2-4)	09-MW7-06 (10-12)	09-MW7-23 (44-46)	09-MW8-04 (6-8)	09-MW8-06 (10-12)
VOLATILE ORGANIC COMPOUNDS (ug/Kg)						
Vinyl chloride	–	–	–	350 J	–	–
Acetone	–	–	–	–	–	–
1,2-Dichloroethene(Total)	14	–	–	3100 J	–	–
2-Butanone	–	–	–	–	11 J	–
1,1,1-Trichloroethane	13	–	–	–	2 J	–
Trichloroethene	15	–	–	–	–	–
Benzene	–	–	–	–	–	–
Tetrachloroethene	–	–	–	–	2 J	–
Toluene	1 J	3 J	–	–	–	–
Chlorobenzene	–	3 J	–	–	–	–
Ethylbenzene	–	–	4 J	–	–	–
Xylenes (Total)	1 J	–	14	–	–	–
SEMIVOLATILE ORGANIC COMPOUNDS (ug/Kg)						
Phenol	4000	–	–	N/A	–	–
1,3-Dichlorobenzene	–	–	–	N/A	–	–
1,4-Dichlorobenzene	42 J	–	–	N/A	–	–
1,2-Dichlorobenzene	–	–	–	N/A	–	–
2-Methylphenol	50 J	–	–	N/A	–	–
2,2'-Oxybis(1-chloropropane)	–	–	–	N/A	65 J	–
4-Methylphenol	180 J	–	–	N/A	–	–
2,4-Dimethylphenol	–	–	–	N/A	–	41 J
Naphthalene *	1200	190 J	80 J	N/A	–	200 J
2-Methylnaphthalene *	210 J	1200 J	54 J	N/A	–	–
Dimethyl phthalate	–	–	2400	N/A	–	–
Acenaphthylene *	67 J	–	–	N/A	51 J	–
Acenaphthene *	670	–	–	N/A	–	–
Dibenzofuran	290 J	–	–	N/A	–	–
Diethyl phthalate	4300	–	–	N/A	–	58 J
Fluorene *	970	290 J	39 J	N/A	–	–
N-Nitrosodiphenylamine(1)	–	–	–	N/A	–	–
Phenanthrene *	2600	810 J	160 J	N/A	630	260 J
Anthracene *	370 J	260 J	–	N/A	150 J	64 J
Carbazole	90 J	–	–	N/A	66 J	41 J
Di-n-butyl phthalate	120 J	–	410	N/A	–	–
Fluoranthene *	4400	480 J	300 J	N/A	1200	520
Pyrene *	2700	440 J	180 J	N/A	990	480
Butyl benzyl phthalate	13000	310 J	120 J	N/A	58 J	–
Benzo(a)anthracene **	1100	250 J	110 J	N/A	960	460
Chrysene **	500	310 J	140 J	N/A	960	380 J
bis(2-Ethylhexyl)phthalate	1500 J	340 J	1200	N/A	510	620
Di-n-octyl phthalate	–	–	75 J	N/A	–	–
Benzo(b)fluoranthene **	820	–	280 J	N/A	1200	700
Benzo(k)fluoranthene **	820	–	280 J	N/A	1200	700
Benzo(a)pyrene **	340 J	–	110 J	N/A	590	350 J
Indeno(1,2,3-cd)pyrene **	170 J	–	–	N/A	270 J	250 J
Dibenzo(a,h)anthracene **	43 J	–	–	N/A	–	64 J
Benzo(g,h,i)perylene **	310 J	–	–	N/A	210 J	210 J
TOTAL SVOCs:	40862	4880	5938	N/A	9110	5398
TOTAL PAHs:	15060	3680	1573	N/A	7931	4442
TOTAL CaPAHs:	4103	560	920	N/A	5390	3114

– = NON-DETECT
J = ESTIMATED CONCENTRATION

* - Polynuclear Aromatic Hydrocarbon (PAH)
** - Carcinogenic Polynuclear Aromatic Hydrocarbon (CaPAH)

TABLE 2-19
NCBC DAVISVILLE
SITE 09 - ALLEN HARBOR LANDFILL
SUBSURFACE SOIL SUMMARY TABLE

Client ID: Sample Depth (ft):	09-MW6-08 (14-16)	09-MW7-02 (2-4)	09-MW7-06 (10-12)	09-MW7-23 (44-46)	09-MW8-04 (6-8)	09-MW8-06 (10-12)
PESTICIDES/PCBS (µg/kg)						
Alpha-BHC	–	0.31 J	–	N/A	–	–
Beta-BHC	31 J	0.44 J	–	N/A	–	–
Delta-BHC	–	–	–	N/A	–	–
Heptachlor	0.98 J	0.2 J	–	N/A	–	–
Aldrin	26 J	3.6 J	–	N/A	2.7 J	–
Heptachlor epoxide	–	–	3.6 J	N/A	2.4 J	–
Endosulfan I	–	–	–	N/A	–	–
Dieldrin	–	–	–	N/A	–	–
4,4'-DDE	57 J	0.69 J	38 J	N/A	31	72 J
Endrin	5.5 J	–	–	N/A	1.7 J	–
Endosulfan II	35 J	–	–	N/A	–	–
4,4'-DDD	–	–	430	N/A	150 J	270 J
Endosulfan Sulfate	–	–	–	N/A	–	–
4,4'-DDT	–	–	14 J	N/A	–	4.2 J
p,p'-Methoxychlor	1.4 J	–	–	N/A	–	–
Endrin ketone	–	–	–	N/A	–	–
Endrin aldehyde	26 J	–	–	N/A	–	–
Alpha chlordane	–	2.7 J	0.22 J	N/A	–	–
Gamma chlordane	3.1 J	7.6 J	0.3 J	N/A	–	2.5 J
PCB-1254	3400 J	–	–	N/A	–	–
PCB-1260	–	570	500 J	N/A	200 J	120 J
INORGANICS (mg/kg)						
Aluminum	14800	5610	4720	N/A	18300	8660
Antimony	46.8 J	–	–	N/A	89.8 J	38.8 J
Arsenic	13.5	0.87 J	2.8 J	N/A	13.6 J	5.9 J
Barium	643	106	80.7	N/A	582	257
Beryllium	0.5	5.6	–	N/A	2.9	1.4
Cadmium	45.2 J	0.28	2.7	N/A	56.3	65.7
Calcium	12200	3070	1940	N/A	7710	9240
Chromium	122 J	79.8 J	15.9 J	N/A	154 J	117 J
Cobalt	29.2	26.4	4.7	N/A	22.6	11.3
Copper	1070	736 J	71.3 J	N/A	1130 J	827 J
Iron	143000 J	23100	13200	N/A	156000	71600
Lead	933	573 J	106 J	N/A	1310 J	1250 J
Magnesium	9230	1700	1360	N/A	2430	2110
Manganese	1120 J	258 J	150 J	N/A	1270 J	616 J
Mercury	0.81	–	1.6	N/A	1.7	3.8
Nickel	159	212	13.1	N/A	227	79.3
Potassium	998	586	547	N/A	745	582
Selenium	–	–	–	N/A	–	–
Silver	4.3 J	0.29 J	4.6 J	N/A	34.9 J	0.4 J
Sodium	468	465	140	N/A	681	407
Vanadium	19 J	15.6	32	N/A	823	333
Zinc	3060	2360 J	236 J	N/A	2780 J	1710 J
Cyanide	–	–	–	N/A	–	1.1 J
DIOXIN/FURANS (µg/kg)						
Total 2,3,7,8-TCDD Toxicity Equivalents	N/A	N/A	N/A	N/A	N/A	N/A

– = NON-DETECT
J = ESTIMATED CONCENTRATION

TABLE 2-19
NCBC DAVISVILLE
SITE 09 - ALLEN HARBOR LANDFILL
SUBSURFACE SOIL SUMMARY TABLE

Client ID: Sample Depth (ft):	09-MW9-08 (14-16)	09-MW10-09 (16-18)	09-MW1105 (8-10)	09-MW12-03 (4-6)
VOLATILE ORGANIC COMPOUNDS (ug/Kg)				
Vinyl chloride	–	–	–	–
Acetone	–	–	–	–
1,2-Dichloroethene(Total)	–	–	–	–
2-Butanone	–	–	–	–
1,1,1-Trichloroethane	4 J	–	–	–
Trichloroethene	–	–	2 J	–
Benzene	–	–	–	–
Tetrachloroethene	–	–	–	–
Toluene	2 J	–	2 J	–
Chlorobenzene	–	–	180	–
Ethylbenzene	–	–	2 J	–
Xylenes (Total)	–	–	25	–
SEMIVOLATILE ORGANIC COMPOUNDS (ug/Kg)				
Phenol	70 J	–	–	–
1,3-Dichlorobenzene	–	–	–	–
1,4-Dichlorobenzene	–	110 J	–	–
1,2-Dichlorobenzene	–	–	–	–
2-Methylphenol	–	–	–	–
2,2'-Oxybis(1-chloropropane)	–	–	–	–
4-Methylphenol	190 J	100 J	–	–
2,4-Dimethylphenol	–	–	–	–
Naphthalene *	120 J	90 J	19000	–
2-Methylnaphthalene *	69 J	44 J	5000	–
Dimethyl phthalate	–	–	–	–
Acenaphthylene *	–	–	–	–
Acenaphthene *	490	110 J	17000	–
Dibenzofuran	360 J	51 J	12000	–
Diethyl phthalate	–	51 J	–	–
Fluorene *	680	130 J	18000	–
N-Nitrosodiphenylamine(1)	–	–	–	–
Phenanthrene *	6600 J	570	110000	–
Anthracene *	1300	130 J	23000	–
Carbazole	900	60 J	10000 J	–
Di-n-butyl phthalate	60 J	58 J	–	–
Fluoranthene *	7700 J	950	94000	–
Pyrene *	4200 J	560	81000	–
Butyl benzyl phthalate	64 J	–	–	–
Benzo(a)anthracene **	2100	380 J	41000	–
Chrysene **	1500	390 J	21000	–
bis(2-Ethylhexyl)phthalate	760	500	–	–
Di-n-octyl phthalate	–	–	–	–
Benzo(b)fluoranthene **	6100 J	710	41000	–
Benzo(k)fluoranthene **	6100 J	710	41000	–
Benzo(a)pyrene **	2400	290 J	22000	–
Indeno(1,2,3-cd)pyrene **	520	110 J	15000	–
Dibenzo(a,h)anthracene **	240 J	–	6400	–
Benzo(g,h,i)perylene **	570	42 J	15000	–
TOTAL SVOCs:	43093	6146	591400	0
TOTAL PAHs:	35389	4776	482400	0
TOTAL CaPAHs:	19530	2632	202400	0

– = NON-DETECT
J = ESTIMATED CONCENTRATION

* - Polynuclear Aromatic Hydrocarbon (PAH)
** - Carcinogenic Polynuclear Aromatic Hydrocarbon (CaPAH)

TABLE 2-19
NCBC DAVISVILLE
SITE 09 - ALLEN HARBOR LANDFILL
SUBSURFACE SOIL SUMMARY TABLE

Client ID:	09-MW9-08	09-MW10-09	09-MW1105	09-MW12-03
Sample Depth (ft):	(14-16)	(16-18)	(8-10)	(4-6)
PESTICIDES/PCBS (µg/kg)				
Alpha-BHC	–	–	0.089 J	–
Beta-BHC	–	–	–	–
Delta-BHC	–	0.38 J	–	–
Heptachlor	0.67 J	0.16 J	–	–
Aldrin	–	0.26 J	–	–
Heptachlor epoxide	–	2.1 J	–	–
Endosulfan I	2 J	0.58 J	–	–
Dieldrin	–	–	7.6 J	–
4,4'-DDE	–	–	–	–
Endrin	3 J	–	–	–
Endosulfan II	2.3 J	–	–	–
4,4'-DDD	30 J	12	–	–
Endosulfan Sulfate	–	–	–	–
4,4'-DDT	14 J	–	14 J	–
p,p'-Methoxychlor	6.3 J	–	–	–
Endrin ketone	–	–	–	–
Endrin aldehyde	11 J	–	–	–
Alpha chlordane	–	–	2.1 J	–
Gamma chlordane	0.7 J	0.35 J	0.34 J	–
PCB-1254	–	–	–	–
PCB-1260	–	22 J	130 J	–
INORGANICS (mg/kg)				
Aluminum	9150	8110	7600	3500 J
Antimony	26.5 J	13.9 J	–	–
Arsenic	7	13 J	2.2	1.6
Barium	173	101	47	5.2
Beryllium	0.91	–	1.5	0.3
Cadmium	26.1	21.3	23 J	0.026
Calcium	16000 J	4960	4600	421
Chromium	73.8 J	53 J	21.7 J	4.7
Cobalt	12.7	10.3	8.7	2.5
Copper	1240 J	753 J	413	8.5
Iron	154000 J	37600	12700 J	8350 J
Lead	656	1260 J	250	3.4
Magnesium	2430	2980	1160	1040 J
Manganese	929 J	265 J	187 J	58.2 J
Mercury	0.55	0.38	0.27	0.13
Nickel	88.6 J	35	34.5	5.9
Potassium	853	724	518	–
Selenium	–	–	–	–
Silver	7.5	4.2 J	2.5 J	–
Sodium	313	248	244	41.5
Vanadium	36.3	14.2	35.1 J	4.5
Zinc	1950	2430 J	837	30.4
Cyanide	–	0.91 J	–	–
DIOXIN/FURANS (µg/kg)				
Total 2,3,7,8-TCDD Toxicity Equivalents	N/A	0.0875	N/A	N/A

– = NON-DETECT
J = ESTIMATED CONCENTRATION

APPENDIX B

PHASE III RI BORING LOGS

EA Engineering, Science, and Technology, Inc.

LOG OF SOIL BORING

Coordinates: 196801.07N, 522584.60E
Surface Elevation: 19.5
Casing Above Surface 2.4
Reference Elevation: 21.72
Reference Description Top of well riser

Job. No.	Client	Location
29600.32	NORDIV, NAVFAC NCBC-Davisville	IR Program Site 09

Drilling Method: Mobile B-61 drill rig using 4.25-in. HSA

Boring No. MW09-07I

Sampling Method: Standard 2-in. split barrel driven 24 in. with a 140-lb hammer falling 30 in.

Sheet 1 of 2

Water Level					Drilling Start	Drilling Finish
Time					0900	1530
Date					01/31/95	01/31/95
Reference						

Sample Type	Inches Drvn/In Recvrd	Dpth. Csg.	Samp. # /samp. depth	PID (ppm)	Blows per 6 in.	Depth in Feet	USCS Log	Surface Conditions:
						0		
					1		X	Fill: Black fine-medium sand with some silt, grass roots. Cobble in end
SS	12 / 10	0	S-1 0-1	10.3	50/6	1		of sampler, dry.
						2		
						3		
						4		
						5		
					3			
SS	15 / 12	5	S-2 5-6.3	21.4	4	6	X	Fill: Black medium-coarse sand with some gravel and glass, plastic, wood.
					50/3			Trace to little silt, moist.
						7		
						8		Fiberglass and aluminum in cuttings.
						9		
						10		
					10			
SS	24 / 18	10	S-3 10-12	15.1	9	11	X	Fill: Black medium-coarse sand with little silt, bits of plastic and cardboard.
					10			
					15	12		
						13		
						14		
						15		
					10			
3 in. SS	24 / 24	15	S-4 15-17	69.5	9	16	X	Fill: Black to dark gray fine-medium sand, trace silt, wet.
					9			
					9	17		
					1			
SS	24 / 24	17	S-5 17-19	76.7	1	18	X	10 in. brown organic peat.
					2			3 in. black organic silt with some sand.
					3	19		11 in. brown and gray fine-medium sand, wet
					5			
SS	24 / 18	19	S-6 19-21	26.1	8	20	X	Gray fine silty sand, wet.
					11			

Logged by: Tom Porter

Date: 31 January 1995

Drilling Contractor: A&W Environmental Drilling

Driller: John Richardson

WELL SPECIFICATIONS:

Diam. of casing: 2 in. ID
BOB: 35 ft BGS
Screen Interval: 25-35 ft BGS
Riser Interval: 2.2 ft AGS, 25 ft BGS
Sandpack 24-35 ft BGS
Bentonite 21-24 ft BGS
Grout: 0-21 ft BGS
Cover:

EA Engineering, Science, and Technology, Inc.

LOG OF SOIL BORING

Coordinates: 196801.07N, 522584.60E
Surface Elevation: 19.5
Casing Above Surface 2.4
Reference Elevation: 21.72
Reference Description Top of well riser

Job. No.	Client	Location
29600.32	NORDIV, NAVFAC NCBC-Davisville	IR Program Site 09

Drilling Method: Mobile B-61 drill rig using 4.25-in. HSA

Boring No. MW09-07I

Sampling Method: 2-in. split barrel driven 24 in. with a 140-lb hammer falling 30 in.

Sheet 2 of 2

Water Level					Drilling Start	Drilling Finish
Time					0900	1530
Date					01/31/95	01/31/95
Reference						

Sample Type	Inches Drvn/In Recvrd	Dpth. Csg.	Samp. # /samp. depth	PID (ppm)	Blows per 6 in.	Depth in Feet	USCS Log	Surface Conditions:
					8	20		
					11			
					13	21		
					10			
SS	24	21	S-7	17.4	13	22	X	15 in. gray medium-coarse sand with trace silt.
	18		21-23		16			3 in. silty fine sand, wet.
					24	23		
					11			
SS	24	23	S-8	22.6	14	24	X	Gray fine sand with some silt, wet.
	18		23-25		14			
					15	25		
					3			
SS	24	25	S-9	18.5	6	26	X	Gray silty fine sand, wet.
	4		25-27		8			
					9	27		
					9			
SS	24	27	S-10	24.2	12	28	X	Gray silty fine sand, wet.
	18		27-29		13			
					14	29		
					10			
SS	24	29	S-11	22.6	14	30	X	Gray fine sand with some silt.
	8		29-31		15			
					15	31		
					14			
SS	24	31	S-12	15.1	12	32	X	Gray silty fine sand, wet.
	12		31-33		17			
					19	33		
					1			
SS	24	33	S-13	16.2	1	34	X	Gray sandy silt to silty sand, wet.
	8		33-35		2			
					2	35		
					1			
SS	24	35	S-14	22.1	1	36		
	20		35-37		1		X	Gray silt with trace fine sand, wet.
					1	37		Bottom of boring at 37 ft BGS.
						38		
						39		
						40		

Logged by: Tom Porter Date: 31 January 1995

Drilling Contractor: A&W Environmental Drilling Driller: John Richardson

WELL SPECIFICATIONS:

Diam. of casing: _____ Screen Interval: _____ Sandpack: _____ Grout: _____

BOB: _____ Riser Interval: _____ Bentonite: _____ Cover: _____

EA Engineering, Science, and Technology, Inc.

LOG OF SOIL BORING

Coordinates: 196789.00N, 522596.12E
Surface Elevation: 19.4
Casing Above Surface 2.4
Reference Elevation: 21.59
Reference Description Top of well riser

Job. No.	Client	Location
29600.32	NORDIV, NAVFAC NCBC-Davisville	IR Program Site 09

Drilling Method: Mobile B-61 drill rig using 8.25-in. HSA with rollerbit

Sampling Method: 2-in. split-spoon with 140-lb hammer falling 30 in.

Boring No. MW09-07R

Sheet 1 of 4

Water Level					Drilling Start	Drilling Finish
Time					0740	1120
Date					03/16/95	
Reference						

Sample Type	Inches Drvn/In Recvrd	Dpth. Csg.	Samp. # /samp. depth	PID (ppm)	Blows per 6 in.	Depth in Feet	USCS Log	Surface Conditions:
						0		Augered 0-15 ft using 8.25-in. augers
						1		Refer to the MW09-07I boring log for 0-15 ft and 17-30 ft soil descriptions.
						2		
						3		
						4		
3-in. SS	19	15	S-1	112	7	15		0-15 ft: Fill: dark brown to black fine-medium sand, gravel to 1 in., saturated,
	14		15-17	6.8	13			metal scrap, petrol odor, sheen
					15	6		
					100/1			15-19 ft: fine-medium sand, metal scrap, petrol odor, sheen.
						7		
						8		
						9		
						20		
						1		
						2		
						3		
						4		
						25		
						6		
						7		
						8		
						9		
						30		

Logged by: Judi Shapiro Date: 16 March 1995

Drilling Contractor: A&W Environmental Drilling Driller: Don Sylvia

WELL SPECIFICATIONS:

Diam. of casing: 2 in. Screen Interval: 73-83 ft BGS Sandpack 72-83.5 ft BGS Grout: 0-70 ft BGS

BOB: 86.0 ft Riser Interval: 2 ft AGS, 73 ft BGS Bentonite 70-72 ft, 83.5-86 ft BGS

EA Engineering, Science, and Technology, Inc.

LOG OF SOIL BORING

Coordinates:
Surface Elevation:
Casing Above Surface:
Reference Elevation:
Reference Description:

Job. No.	Client	Location
29600.32	NORDIV, NAVFAC NCBC-Davisville	IR Program Site 09

Drilling Method: Roller bit, HSA (8.25 in.) Mobile B-61 drill rig

Sampling Method: 3-in. split spoon driven 60 in. with a 300-lb hammer with 5-ft long 3-in. SS

Boring No. MW09-07R

Sheet 2 of 4

Water Level					Drilling Start	Drilling Finish
Time						
Date						
Reference						

Sample Type	Inches Drvn/In Recvrd	Dpth. Csg.	Samp. # /samp. depth	PID (ppm)	Blows per 6 in.	Depth in Feet	USCS Log	Surface Conditions:
SS	48	30	S-2	4.2	2	30		0-8 in. gray sandy silt, wet.
	33		30-34		7			8-12 in. gray sandy silt.
					7	31		12-14 in. gray silty sand.
					8		4 ft	14-19 in. gray sandy silt.
					9	32	long	19-21 in. gray fine sand.
					7			21-30 in. gray sandy silt, wet, solvent odor.
					12	33	2 in.	4-ft long 2-in. split barrel.
					12		SS	Bottom of 12 in. diameter hole to 35 ft. Drove casing to 38 ft.
						34		
						35		
						36		
						37		
SS	60	38	S-3	56	WOR	38	1440	Dark gray clayey silt, increasing clay content towards bottom 1.5 ft of sampler.
	39		38-43		WOR		Hammer	Clay partings at approximately 2 ft 6 in. and 2 ft 8 in. from top of sample.
					2	39		Solvent odor.
					1			
					2	40	5 ft	
					2		SS	
					2	41		
					2			
					3	42		
					2			
SS	60	38	S-4	38	4	43	1510	Dark gray clayey silt with clay bands at 1 ft 1 in., 1 ft 5 in., 2 ft 3 in., and 2 ft 8 in.
	39		43-48		3			from top of sampler. Bottom 4 in. less clayey. Bands of clay are lighter gray.
					1	44		
					2			
					2	45	5 ft	
					2		SS	
					3	46		
					2			
					3	47		
					3			
SS	60	38	S-5	3	3	48	1535	0-7 in. dark gray clayey silt, wet.
	34		48-53		3			7-10 in. varied clayey silt, less clayey than above, same color.
					2	49		10-34 in. sandy silt.
					2			
						50		

Logged by: Judi Shapiro, Denise Acampora

Date: 16 and 22 March 1995

Drilling Contractor: A&W Environmental Drilling

Driller: Don Sylvia

WELL SPECIFICATIONS:

Diam. of casing: _____ Screen Interval: _____ Sandpack: _____ Grout: _____

BOB: _____ Riser Interval: _____ Bentonite: _____ Cover: _____

EA Engineering, Science, and Technology, Inc.

LOG OF SOIL BORING

Coordinates:
Surface Elevation:
Casing Above Surface:
Reference Elevation:
Reference Description:

Job. No.	Client	Location
29600.32	NORDIV, NAVFAC NCBC-Davisville	IR Program Site 09

Drilling Method: Roller bit mobile B-61 drill rig

Boring No. MW09-07R

Sampling Method: 3-in. split barrel driven 60 in. with a 300-lb hammer with 5 ft x 3 in. diameter SS

Sheet 3 of 4

Water Level					Drilling Start	Drilling Finish
Time						
Date						
Reference						

Sample Type	Inches Drvn/In Recvrd	Dpth. Csg.	Samp. # /samp. depth	PID (ppm)	Blows per 6 in.	Depth in Feet	USCS Log	Surface Conditions:
					2	50		
					2			
					3	51		
					9			
					8	52		
					8			
SS	60	38	S-6	2	11	53	1605	0-5 in. - clayey silt, trace angular gravel up to 0.5 ft.
	28		53-58		11		300-lb	5-12 in. - fine-medium sandy silt, trace angular gravel up to 1 in.
					4	54	w/5 ft	12-16 in. - clayey silt.
					3		SS	16-21 in. - clayey silt and fine-coarse sand, gravel up to 2-in. (20-30%) angular.
					9	55		21-28 in. - silty medium sand with gravel up to 3-in. diameter.
					15			
					18	56		
					14			
					8	57		
					21			
SS	36	58	S-7	2	46	58	1000	0-8 in. - dark gray, gravel flat up to 1 in. (angular to subangular) and fine-medium
	22		58-61		55			sand.
					87	59		8-14 in. - sandy silt with angular gravel and blocky up to 3 in.
					34		5 ft	14-18 in. - silty fine sand, some gravel angular and blocky up to 2 in.
					31	60	SS	18-22 in. - same as above except gravel only 0.5 in. diameter.
					43			
					75/4	61		
						62		
SS	47	61	S-8	0.8	22	63	1338	0-4 in. - dark gray fine-coarse sand and angular gravel up tp 0.25 in. diameter.
	22		63-67		27			4-6 in. - fine sand, trace gravel up to 1/2 in., subangular
					24	64		6-12 in. - silt with blocky gravel up to 3 in., subangular and angular.
					16		5 ft	12-22 in. - sandy silt, angular gravel up to 1 in., small lens of silty medium sand
					17	65	SS	19-20 in., wet.
					43			
					64	66		Rollerbitted to 72 ft BGS.
					100/5			
						67		
						68		
		68*						* 5-in. diameter temp casing.
						69		
						70		

Logged by: Judi Shapiro, Denise Acampora, Dave Street

Date: 22 and 23 March 1995

Drilling Contractor: A&W Environmental Drilling

Driller: Don Sylvia

WELL SPECIFICATIONS:

Diam. of casing: _____ Screen Interval: _____ Sandpack: _____ Grout: _____

BOB: _____ Riser Interval: _____ Bentonite: _____ Cover: _____

EA Engineering, Science, and Technology, Inc.

LOG OF CORE BORING

Job. No.	Client	Location
29600.32	NORDIV, NAVFAC NCBC-Davisville	IR Program Site 09

Drilling Method: Mobile B-61 rig using core bit

Boring No. MW09-07R

Sheet 4 of 4

Coordinates:
Surface Elevation:
Casing Above Surface:
Reference Elevation:
Reference Description:

Core Bit Size: HX

					Drilling Start	Drilling Finish
Water Level					Time	Time
Time						
Date					Date	Date
Reference						

Surface Conditions:

Core Run	RQD %	Rec %	Stratigraph	Bedding/ Fractures (dip angl)	Fillings	Ova (ppm)	Depth in Feet	Graphic Log	Lithologic Log	Drilling Log
Run 1							70, 71			
Run 2	100	100/ 5.0			quartzite slicks		72, 73, 74, 75, 76		Medium-dark gray quartzite. Some dark and light banding at 45 C. Some speckling with dark brown minerals possibly mica. Most fracture fillings appear to be quartzite, fractures at 7-14 in., 14-18 in., 19-23 in., 23-24 in., 55-60 in.	
Run 3	100	100/ 5.2			iron stained; slicks		77, 78, 79, 80, 81, 82		As above, but color is light-medium gray of banding increased to 60-70 C. Fractures at 24-26 in., 30-37 in., 44-45 in., 58-61 in. As above, darker gray as in first run. Fractures at 21-28 in., 28-29 in., 32-35 in., 45-48 in.	
	100	100/ 4.2			slicks; iron stained		83, 84, 85, 86		Bottom of boring at 86 ft.	
							87, 88, 89			

Logged by: Judi Shapiro

Date: 16 March 1995

Drilling Contractor: A&W Environmental Drilling

Driller: Don Sylvia

WELL SPECIFICATIONS:

Diam. of casing:
B.O.B:
Screen Interval:
Riser Interval:
Sandpack:
Bentonite:
Grout:
Cover:

EA Engineering, Science, and Technology, Inc.

LOG OF SOIL BORING

Coordinates: 196757.39N, 522590.45E
Surface Elevation: 19.3
Casing Above Surface 1.6
Reference Elevation: 20.80
Reference Description Top of well riser

Job. No.	Client	Location
29600.32	NORDIV, NAVFAC NCBC-Davisville	IR Program Site 09

Drilling Method: Mobile B-61 drill rig using 4.25-in. HSA

Boring No. MW09-14I

Sampling Method: 2-in. split-spoon driven 24 in. with 140-lb hammer falling 30 in.

Sheet 1 of 2

Water Level					Drilling Start	Drilling Finish
Time					1415	1120
Date					02/01/95	02/02/95
Reference						

Surface Conditions:

Sample Type	Inches Drvn/In Recvrd	Dpth. Csg.	Samp. # /samp. depth	PID (ppm)	Blows per 6 in.	Depth in Feet		USCS Log	
						0			
					11				
SS	19	0	S-1	0.8	36	1	x		Fill: black to brown medium-coarse sand, cobbles, gravel, trace silt, dry.
	18		0-1		42				
					20/1	2			
						3			
						4			
						5			
					12				
SS	24	5	S-2	0.6	14	6	x		Fill: dark brown medium to coarse sand with some gravel, trace to little silt,
	6		5-7		17				glass, dry.
					10	7			
						8			
						9			
						10			
					7				
SS	24	10	S-3	0.6	12	1	x		Fill: black to dark brown fine-coarse sand with trace to little silt, wood, dry.
	12		10-12		14				
					6	2			
						3			
						4			
						15			
					2				
SS	24	15	S-4	4.4	3	6	x		Fill: black sandy silt with layers of brown medium sand and some silt, moist-wet.
	20		15-17		3				
					3	7			
					3				
SS	24	17	S-5	0.5	3	8	x		Dark gray medium sand and silt (top 8 in.), trace grass
	24		17-19		11				16 in. medium sand with trace silt.
					15	9			
					11				
					18	20			

Logged by: Tom Porter Date: 1 and 2 February 1995

Drilling Contractor: A&W Environmental Drilling Driller: John Richardson

WELL SPECIFICATIONS:

Diam. of casing: 2 in. Screen Interval: 25-35 ft BGS Sandpack 24-35.5 ft BGS Grout: 0-21 ft BGS

BOB: 37 ft BGS Riser Interval: 1.5 AGS, 25 ft BGS Bentonite 21-24 ft BGS Cover:

EA Engineering, Science, and Technology, Inc.

LOG OF SOIL BORING

Coordinates:
Surface Elevation:
Casing Above Surface:
Reference Elevation:
Reference Description:

Job. No.	Client	Location
29600.32	NORDIV, NAVFAC NCBC-Davisville	IR Program Site 09

Drilling Method: Mobile B-61 drill rig using 4.25-in. HSA

Boring No. MW09-14I

Sampling Method: Standard 2-in. split-spoon driven 24 in. with 140-lb hammer falling 30 in.

Sheet 2 of 2

Water Level					Drilling Start	Drilling Finish
Time					1415	1120
Date					02/01/95	02/01/95
Reference						

Sample Type	Inches Drvn/In Recvrd	Dpth. Csg.	Samp. # /samp. depth	PID (ppm)	Blows per 6 in.	Depth in Feet		USCS Log	Surface Conditions:
SS	24	19	S-6	2.5	27	in.20	x		Gray brown medium-coarse sand, trace silt, wet.
	20		19-21		27				
					31	21			
					30				Gray brown medium-coarse sand, trace to little silt, wet.
SS	24	21	S-7	8	17	22	x		Last 8 in. fine sandy silt.
	24		21-23		20				
					19	23			
					6				Dark gray very fine sand with little clayey silt, wet.
SS	24	23	S-8	5.6	6	24			
	14		23-25		13				
					11	25			
					3				Dary gray very fine sand with trace clayey silt, wet.
SS	24	25	S-9	1.5	8	26			
	10		25-27		11				
					12	27			
					15				Dark gray very fine sand with trace clayey silt, wet.
SS	24	27	S-10	1.4	13	28			
	20		27-29		17				
					17	29			
					10				Gray fine-medium sand, trace to little silt, wet.
SS	24	29	S-11	5.6	14	30			
	18		29-31		15				
					16	31			
					19				Gray medium sand as above
SS	24	31	S-12	2.5	16	32			Last 8 in. silty sand, sandy clayey silt.
	24		31-33		15				
					22	33			
									Auger to 33 ft, 2 ft of running sand. Added 15 gal of water.
						34			Ran auger to 35 ft, wash out augers, collect water in tub.
					1	35			
					1				Dark gray very fine sand with trace to little clayey silt. Solvent odor.
SS	24	35	S-13	1.1	1	36	x		
			35-37		1				
						37			Bottom of boring at 37 ft BGS.
						38			
						39			
						40			

Logged by: Tom Porter

Date: 1 and 2 February 1995

Drilling Contractor: A&W Environmental Drilling

Driller: John Richardson

WELL SPECIFICATIONS:

Diam. of casing: _____ Screen Interval: _____ Sandpack: _____ Grout: _____

BOB: _____ Riser Interval: _____ Bentonite: _____ Cover: _____

EA Engineering, Science, and Technology, Inc.

LOG OF SOIL BORING

Coordinates: 196752.52N, 522592.19E
Surface Elevation: 19.4
Casing Above Surface 1.9
Reference Elevation: 21.50
Reference Description Top of well riser

Job. No.	Client	Location
29600.32	NORDIV, NAVFAC NCBC-Davisville	IR Program Site 09

Drilling Method: Mobile B-61 drill rig

Boring No. MW09-14D

Sampling Method: 2-in. split-spoon driven 24 in. with 140-lb hammer falling 30 in.

Sheet 1 of 3

					Drilling Start	Drilling Finish
Water Level	17.8	16.25			02/08/95	02/13/95
Time	730	1140				
Date	02/09/95	02/14/95				
Reference	Ground	Ground				

Sample Type	Inches Drvn/In Recvrd	Dpth. Csg.	Samp. # /samp. depth	PID (ppm)	Blows per 6 in.	Depth in Feet	USCS Log	Surface Conditions: Grass
						40		Refer to the MW09-14I boring log for 0-37 ft soil descriptions.
						41		
						42		
						43		
SS	24 / 24	44	1 / 44-46	8.6	2 / 1	44		Black clayey silt, wet. No odor or staining.
					1 / 2	45		
						46		
						47		
						48		
SS	24 / 24	49	2 / 49-51	2.2	3 / 3	49		Black clayey silt with little to some very fine sand, wet. No odor or staining.
					3 / 2	50		
						51		
						52		
						53		
SS	24 / 24	54	3 / 54-56	1.9	2 / 3	54		Same as above.
					5 / 4	55		
						56		
						57		
						58		
		59				59		Advanced casing to 59 ft, rock fragments coming up in wash water. Lost all water at 59 ft BGS.
						60		

Logged by: Kevin Caldwell

Date: 8 February 1995

Drilling Contractor: A&W Environmental Drilling

Driller: John Richardson

WELL SPECIFICATIONS:

Diam. of casing: 2 in. ID
BOB: 80 ft AGS
Screen Interval: 49-59 ft BGS
Riser Interval: 1.7 AGS, 49 ft BGS
Sandpack 48-59.5 ft BGS
Bentonite 44-48, 59.5-80 ft BGS
Grout: 0-44 ft BGS
Cover:

EA Engineering, Science, and Technology, Inc.

LOG OF SOIL BORING

Coordinates:
Surface Elevation:
Casing Above Surface:
Reference Elevation:
Reference Description:

Job. No.	Client	Location
29600.32	NORDIV, NAVFAC NCBC-Davisville	IR Program Site 09

Drilling Method: Mobile B-61 drill rig using 4.25 in. HSA

Boring No. MW09-14D

Sampling Method: 2 in. split-spoon driven 24 in. with 140-lb hammer falling 30 in.

Sheet 2 of 3

					Drilling Start	Drilling Finish
Water Level	17.8	16.25			02/08/95	02/13/95
Time	730	1140				
Date	02/09/95	02/14/95				
Reference	Ground	Ground				

Surface Conditions: Grass

Sample Type	Inches Drvn/In Recvrd	Dpth. Csg.	Samp. # /samp. depth	PID (ppm)	Blows per 6 in.	Depth in Feet	USCS Log	
						60		
						1		Rock core from 61 to 61.75 ft, boulder (core barrel advanced to 64.5 ft).
		61						
						2		
						3		
SS	24 18	61	4 64.5-66.5	3.9	13 35	4		Black coarse-medium sand with little angular gravel and trace to some clayey silt, wet. No odor or staining.
					66 76	65		
SS	9 9	61	9 66.5-67	4.3	35 100/3	6		Same as above.
						7		Refusal at 67 ft.
						8		Rollerbit drill down to 70 ft.
						9		
						70		Rock core 70-71.5 ft, boulder.
						1		
						2		Rollerbit drill down to 75 ft.
						3		
		74				4		Rock core from 75 to 80 ft.
						75		
						6		
						7		
						8		
						9		
						80		End of boring at 80 ft.

Logged by: Kevin Caldwell Date: 8 February 1995

Drilling Contractor: A&W Environmental Drilling Driller: John Richardson

WELL SPECIFICATIONS:

Diam. of casing: Screen Interval: Sandpack: Grout:

BOB: Riser Interval: Bentonite: Cover:

EA Engineering, Science, and Technology, Inc.

LOG OF CORE BORING

Job. No.	Client	Location
29600.32	NORDIV, NAVFAC NCBC-Davisville	IR Program Site 09

Drilling Method: Mobile B-61 mounted rig core bit mobile truck

Boring No. MW09-14D

Sheet 3 of 3

Coordinates:
Surface Elevation:
Casing Above Surface:
Reference Elevation:
Reference Description:

Core Bit Size NX					Drilling Start	Drilling Finish
Water Level					Time 1415	Time 1440
Time						
Date					Date 02/13/95	Date 02/13/95
Reference						

Surface Conditions: Grass

Core Run RQ % No.	Rec % FT	Strati-graph	Bedding/ Fractures (dip angl)	Fillings	Ova (ppm)	Depth in Feet	Graphic Log	Lithologic Log	Drilling Log
						70			
						71			
						72			
						73			
						74			
88	100/5					75	NA	Fine medium to dark quartzite with quartz veins at 76-77 ft.	Run 1: 75-80. Lost approximately 75 gal of water, coring at 4-7 minutes per foot.
						76			
						77			
						78			
						79			
						80		Bottom of boring at 80 ft BGS.	
						81			
						82			
						83			
						84			
						85			
						86			
						87			
						88			

Logged by: J. Caldwell

Date: 13 February 1995

Drilling Contractor: A&W Environmental Drilling

Driller: John Richardson

WELL SPECIFICATIONS:

Diam. of casing:
B.O.B.
Screen Interval:
Riser Interval:
Sandpack:
Bentonite:
Grout:
Cover:

EA Engineering, Science, and Technology, Inc.

LOG OF SOIL BORING

Coordinates: 196720.21N, 522523.38E
Surface Elevation: 19.5
Casing Above Surface 2.6
Reference Elevation: 21.72
Reference Description Top of well riser

Job. No.	Client	Location
29600.32	NORDIV, NAVFAC NCBC-Davisville	IR Program Site 09

Drilling Method: Mobile B-61 drill rig using 4.25 in. HSA

Boring No. MW09-15I

Sampling Method: 2 in. split-spoon, 3-in. SS driven by a 140-lb hammer falling 30 in.

Sheet 1 of 2

Water Level				
Time				
Date				
Reference				

Drilling	
Start	Finish
1145	1600

Surface Conditions:

Sample Type	Inches Drvn/In Recvrd	Dpth. Csg.	Samp. # /samp. depth	PID (ppm)	Blows per 6 in.	Depth in Feet	USCS Log	
2 in. SS	24 / 20	0	S-1 0-2	0.6	4, 9	0		0-15 in. Fill: Dark brown fine sand and silt, trace rounded, gravel up to 0.25 in., some roots, organics, dry.
					14, 11	1		15-20 in. light brown fine sand, some silt, dry.
						2		
						3		
						4		
2 in. SS	24 / 4	5	S-2 5-7		1, 3	5		Fill: Dark brown-light reddish brown fine-medium sand, trace rounded gravel up to 0.5 in., organics, glass, dry.
					6, 3	6		
						7		
						8		
						9		
2 in. SS	24 / 9	10	S-3 10-12		7, 5	10		Fill: Moderate dark brown fine sand, silt, and gravel up to 0.5 in., organics, glass, dry.
					3, 8	11		
						12		
						13		
						14		
3 in. SS	13 / 1	15	S-4 15-17	26	25, 180	15		Fill: Wood chips soaked with product, wet, pertoleum odor.
					100/1	16		
2 in. SS	24 / 6		S-5 17-19	32	12, 50	17		Fill: Black fine-medium sand, trace to little silt, wet, petroleum odor, took water sample.
					52, 65	18		
2 in. SS	24 / 14		S-6 19-21	24		19		0-9 in. Fill: Olive gray fine-medium sand, trace to little silt, some thin dark banding, wet.
						20		9-14 in. Dark gray silt, trace to little sand, thin banding, dense, wet.

Logged by: Dave Street Date: 27 February 1995

Drilling Contractor: A&W Environmental Drilling Driller: Phil Thornsbury

WELL SPECIFICATIONS:

Diam. of casing: 2 in. ID Screen Interval: 20-30 ft BGS Sandpack 19-30.5 ft BGS Grout: 0-16.5 ft BGS
BOB: 30.5 ft BGS Riser Interval: 2.2 ft AGS, 20 ft BGS Bentonite 16.5-19 ft BGS Cover:

EA Engineering, Science, and Technology, Inc.

LOG OF SOIL BORING

Coordinates:
Surface Elevation:
Casing Above Surface:
Reference Elevation:
Reference Description:

Job. No.	Client	Location
29600.32	NORDIV, NAVFAC NCBC-Davisville	IR Program Site 09

Drilling Method: Mobile B-61 drill rig

Boring No. MW09-15I

Sampling Method: 2-in. split-spoon, 3-in. SS with 140-lb hammer falling 30 in.

Sheet 2 of 2

Water Level					Drilling Start	Drilling Finish
Time					1145	1600
Date						
Reference						

Sample Type	Inches Drvn/In Recvrd	Dpth. Csg.	Samp. # /samp. depth	PID (ppm)	Blows per 6 in.	Depth in Feet	USCS Log	Surface Conditions:
						20		
SS	24 / 18		S-7 / 21-23	30	18 / 13	21		Black very fine sand with trace silt, some thin banding, dense, wet.
					25 / 40	22		
SS	24 / 16		S-8 / 23-25	22	25 / 28	23		Black very fine sand, trace to little silt, some thin silt stringers, dense,wet.
					39 / 38	24		
SS	24 / 22		S-9 / 25-27	22	9 / 11	25		0- 6 in. As above, no stringers, dense, wet. 6-22 in. Black silt to very fine sand and silt, dense, wet.
					14 / 15	26		
SS	24 / 20		S-10 / 27-29	1	9 / 10	27		Same as last 16 in. above, petrol odor.
					10 / 8	28		
SS	24 / 18		S-11 / 29-31	7	WOR / WOR	29		Dark gray silt, some to little very fine sand, wet, petrol/solvent odor.
					WOR / 2	30		
SS	24 / 22		S-12 / 31-33	6	4 / WOR	31		Same as above but with trace to little very fine sand, slight petrol/solvent odor.
					WOR / 1	32		
SS	24 / 24		S-13 / 33-35	11	2 / 2	33		Same as above, no odor.
					3 / 1	34		
SS	24 / 24		S-14 / 35-37	7	2 / 9	35		Same as above.
					2 / 1	36		
						37		Bottom of boring at 37 ft BGS.
						38		
						39		
						40		

Logged by: Dave Street

Date: 27 February 1995

Drilling Contractor: A&W Environmental Drilling

Driller: Phil Thornsbury

WELL SPECIFICATIONS:

Diam. of casing:
BOB:
Screen Interval:
Riser Interval:
Sandpack:
Bentonite:
Grout:
Cover:

EA Engineering, Science, and Technology, Inc.

LOG OF SOIL BORING

Coordinates: 196877.62N, 522645.22E
Surface Elevation: 19.9
Casing Above Surface 2.6
Reference Elevation: 22.31
Reference Description Top of well riser

Job. No.	Client	Location
29600.32	NORDIV, NAVFAC NCBC-Davisville	IR Program Site 09

Drilling Method: Mobile B-61 using 4.25-in. HSA

Boring No. MW09-16S

Sampling Method: 2 in. split spoon; 3 in. split-spoon as noted 140-lb hammer falling 30 in.

Sheet 1 of 2

Water Level					Drilling Start	Drilling Finish
Time						
Date						
Reference					0800	1445

Surface Conditions: Grassy with small trees and shrubs.

Sample Type	Inches Drvn/In Recvrd	Dpth. Csg.	Samp. # /samp. depth	PID (ppm)	Blows per 6 in.	Depth in Feet	USCS Log	
	24		1		2	0		Fill: Dark brown fine-medium sand, trace silt and little rounded gravel up to 0.5 in.
2 in. SS	18	0	0-2	9	2			organics, moist.
					10	1		
					19			
						2		
						3		
						4		
	16		2		14	5		Fill: Medium-gray, medium-coarse sand, some rounded gravel up to 0.5 in.,
2 in. SS	10	5	5-7	24	8			trace silt, wood and paper debris, organic moist.
					50/4	6		
						7		
						8		
						9		
	24		3		21	10		Fill: Dark gray, black medium-coarse sand, some silt and rounded gravel up to
2 in. SS	11	10	10-12	140	17			0.5 in., wood debris, organics, moist-wet.
					15	11		
					13			
						12		
						13		
						14		
	24		4		11	15		Fill: Dark brown, black medium coarse sand, same and angular gravel up to
3 in. SS	7	15	15-17	100	10			0.5 in. wire, glass, wet, petroleum odor.
					6	16		
					58			
	24		5		120	17		Fill: Dark brown to black angular gravel up to 0.25 in., wood debris, trace medium
2 in. SS	20		17-19	50	23			sand, wet, petroleum odor.
					20	18		
					19			
	24		6		3	19		0-2 in.: Moderate reddish-brown peat, wet
2 in. SS	22		19-21	32	2			2-11 in.: Dark gray, fine sand and silt, orgnaics, metal
					4	20		11 in.: Dark gray silt and very fine sand, some organics, wet.
					17			

Logged by: D. Street Date: 1 March 1995

Drilling Contractor: A&W Environmental Drilling Driller: Phil Thornsbury

L SPECIFICATIONS:

Diam. of casing: 2 in. Screen Interval: 12-22 ft BGS Sandpack 11-22.5 ft BGS Grout: 0-9 ft BGS

BOB: 29 ft BGS Riser Interval: 2.4 AGS, 12 ft BGS Bentonite 9-11 ft BGS Cover:

EA Engineering, Science, and Technology, Inc.

LOG OF SOIL BORING

Coordinates:
Surface Elevation:
Casing Above Surface:
Reference Elevation:
Reference Description:

Job. No.	Client	Location
29600.32	NORDIV, NAVFAC NCBC-Davisville	IR Program Site 09

Drilling Method: Using 4.25 in. HSA Mobile B-61

Boring No. MW09-16S

Sampling Method: 2 in. or 3 in. SS, 140 lb hammer falling 30 in.

Sheet 2 of 2

Drilling	
Start	Finish

Water Level				
Time				
Date				
Reference				

Sample Type	Inches Drvn/In Recvrd	Dpth. Csg.	Samp. # /samp. depth	PID (ppm)	Blows per 6 in.	Depth in Feet	USCS Log	Surface Conditions:
						20		
	24		7		11	21		0-15 in. - As above.
2 in. SS	19		21-23	30	11			15-19 in. - Grades to greenish gray silt with trace to very fine sand. Same as last
					12	22		4 in. above, small (1 in. thick) very fine sand lens. 60 C angle, very thin,
					12			0.125 in. thick, horizontal orange silt lens at about 11 in.
	24		8		12	23		
2 in. SS	12		23-25	3	13			
					16	24		
					17			
	24		9		6	25		Dark gray silt.
3 in. SS	20		25-27	6	14			
					18	26		
					21			
	24		10		9	27		Same as above.
2 in. SS	22		27-29	7.3	13			
					14	28		
					18			
						29		Bottom of boring at 29 ft BGS.
						30		
						31		
						32		
						33		
						34		
						35		
						36		
						37		
						38		
						39		
						40		

Logged by: Dave Street

Date: 1 March 1995

Drilling Contractor: A&W Environmental Drilling

Driller: Phil Thornsbury

WELL SPECIFICATIONS:

Diam. of casing:
BOB:
Screen Interval:
Riser Interval:
Sandpack:
Bentonite:
Grout:
Cover:

EA Engineering, Science, and Technology, Inc.

LOG OF SOIL BORING

Coordinates: 196705.24N, 522698.37E
Surface Elevation: 19.1
Casing Above Surface 2.3
Reference Elevation: 21.2
Reference Description Top of well riser

Job. No.	Client	Location
29600.32	NORDIV, NAVFAC NCBC-Davisville	IR Program Site 09

Drilling Method: Mobile B-61 drill rig using 4.25 in. HSA

Boring No. MW09-17I

Sampling Method: 2 in. diameter split-spoon; 3 in. diamet spoon driven by 140-lb hammer falling 30 in.

Sheet 1 of 2

Water Level					Drilling Start	Drilling Finish
Time						
Date						
Reference					1230	1428

Surface Conditions: Grassy with small trees and shrubs.

Sample Type	Inches Drvn/In Recvrd	Dpth. Csg.	Samp. # /samp. depth	PID (ppm)	Blows per 6 in.	Depth in Feet	USCS Log	Description
	24		1		1	0		Fill: Light to medium brown fine-medium sand and rounded gravel up to 0.5 in.,
2 in. SS	6	0	0-2	1	6	1230		trace silt, organics, dry.
					13	1		
					17			
						2		
						3		
						4		
						1250		
	24		2		10	5		Fill: Dark brown to black medium-coarse sand and rounded gravel up to
2 in. SS	11	5	5-7	50	14			0.25 in., trace-little silt, moist, petroluem odor.
					15	6		
					35			
						7		
						8		
						9		
	24		3		12	10		Fill: Same as above, gravel up to 1 in., wire, glass, slag, petroleum odor,
2 in. SS	10	10	10-12	30	25	1308		moist-wet.
					18	11		
					24			
						12		
						13		
						14		
	24		4		4	15		Fill: Same as above, wet.
3 in. SS	8	15	15-17	3	8	1325		
					25	16		
					12			
	24		5		6	17		Fill: Same as above, wet.
2 in. SS	6		17-19	5	1	1330		
					3	18		
					2			
	24		6		11	19		Dark reddish-brown peat, some dark brown very fine sand, sewage odor,
3 in. SS	18		19-21	1	6	1350		wet.
					7	20		
					7			

Logged by: Dave Street Date: 1 March 1995

Drilling Contractor: A&W Environmental Drilling Driller: Don Sylvia

LL SPECIFICATIONS:

Diam. of casing: 2 in. Screen Interval: 14-24 ft BGS Sandpack 13-25 ft BGS Grout: 0-11 ft BGS
BOB: 29 ft BGS Riser Interval: 2.1 AGS, 14 ft BGS Bentonite 11-13 ft BGS Cover:

EA Engineering, Science, and Technology, Inc.

LOG OF SOIL BORING

Coordinates:
Surface Elevation:
Casing Above Surface:
Reference Elevation:
Reference Description:

Job. No.	Client	Location
29600.32	NORDIV, NAVFAC NCBC-Davisville	IR Program Site 09

Drilling Method:

Boring No. MW09-17I

Sampling Method:

Sheet 2 of 2

Water Level					Drilling Start	Drilling Finish
Time						
Date						
Reference						

Surface Conditions:

Sample Type	Inches Drvn/In Recvrd	Dpth. Csg.	Samp. # /samp. depth	PID (ppm)	Blows per 6 in.	Depth in Feet	USCS Log	
						20		
	24		7		4	21		0-2 in.: Same as above.
2 in. SS	13		21-33	7	6	1355		2-9 in.: Dark brown medium sand, trace fine sand,organics.
					7	22		9-13 in. Dark gray very fine sand and clayey silt.
					9			
	24		8		9	23		Dark greenish-gray clayey silt, trace very fine sand, moist.
3 in. SS	11		23-25	3	9	1359		
					14	24		
					15			
	24		9		12	25		Same as above, dark gray, moist-dry.
2 in. SS	18		25-27	17	20	1423		
					28	26		
					29			
	24		10		5	27		Same as above, dry.
2 in. SS	13		27-29	20	21	1428		
					22	28		
					24			
						29		Bottom of boring at 29 ft BGS.
						30		
						31		
						32		
						33		
						34		
						35		
						36		
						37		
						38		
						39		
						40		

Logged by: Dave Street

Date: 1 March 1995

Drilling Contractor: A&W Environmental Drilling

Driller: Don Sylvia

WELL SPECIFICATIONS:

Diam. of casing:
BOB:
Screen Interval:
Riser Interval:
Sandpack:
Bentonite:
Grout:
Cover:

EA Engineering, Science, and Technology, Inc.

LOG OF SOIL BORING

Coordinates: 196701.38N, 522702.41E
Surface Elevation: 19.3
Casing Above Surface 1.9
Reference Elevation: 20.74
Reference Description Top of well riser

Job. No.	Client	Location
29600.32	NORDIV, NAVFAC NCBC-Davisville	IR Program Site 09

Drilling Method: 8.25 in. HSA, 4.875 in. button bit, 5 in. casing, Mobile B-61 rig

Sampling Method: 3 in. ID, 5 ft SS with 300 lb hammer, unless otherwise noted.

Boring No. MW09-17D

Sheet 1 of 4

Drilling	
Start	Finish
0942	

Water Level				
Time				
Date				
Reference				

Surface Conditions:

Sample Type	Inches Drvn/In Recvrd	Dpth. Csg.	Samp. # /samp. depth	PID (ppm)	Blows per 6 in.	Depth in Feet	USCS Log	
						20		Augered to 26 ft BGS.
						21		Refer to the MW09-17I boring log for the 0-29 ft soil description.
						22		
						23		
						24		
						25		
						26		Push 6 in. diameter casing to 29 ft BGS (3/16/95).
						27		
						28		
	60		1		26	29		3/29/95: Began continuous sampling at 29 ft.
SS	47	29	29-34	6	36			Dark gray, silt, wet, faint odor.
					41	30		
					47			
					65	31		Used 5 ft spoon with 140-lb hammer.
					70			
					89	32		
					70			
					108	33		
					96			
	60		2			34		0-4 in.: Dark gray, fine sand clayey silt, moist to wet.
SS	42	29	34-39	5.8				4-6 in.: Dark gray, silty fine sand, moist to wet.
						35		8-16 in.: Dark gray, fine sandy silt moist with lens of medium sand at 11 in.
								38-42 in.: Dark gray, fine sandy clayey silt, wet.
						36		
						37		
						38		
					16/24	39		
						40		

Logged by: D. Acampora/J. Shapiro

Date: 16 March and 29 March 1995

Drilling Contractor: A&W Environmental Drilling

Driller: Phil Thornsbury

L SPECIFICATIONS:

Diam. of casing: 2 in.
BOB: 79 ft BGS
Screen Interval: 57-67 ft BGS
Riser Interval: 1.5 ft AGS, 57 ft BGS
Sandpack 56-67.5 ft BGS
Bentonite 54-56 ft BGS
Grout: 0-54 ft BGS
Cover:

EA Engineering, Science, and Technology, Inc.

LOG OF SOIL BORING

Coordinates:
Surface Elevation:
Casing Above Surface:
Reference Elevation:
Reference Description:

Job. No.	Client	Location
29600.32	NORDIV, NAVFAC NCBC-Davisville	IR Program Site 09

Drilling Method: Mobile B-61 rig

Boring No. MW09-17D

Sampling Method: 3 in. ID, 5 ft SS with 300-lb hammer

Sheet 3 of 4

Water Level					Drilling Start	Drilling Finish
Time						
Date						
Reference						

Sample Type	Inches Drvn/In Recvrd	Dpth. Csg.	Samp. # /samp. depth	PID (ppm)	Blows per 6 in.	Depth in Feet	USCS Log	Surface Conditions:
	60		7		2	60		0-16 in.: Dark gray clayey silt, wet.
SS	42	29	59-64	4.6	3			16-29 in.: Dark gray fine sandy, clayey silt, wet.
					4	61		29-38 in.: Dark gray, gravelly, clayey, silt, wet.
					5			38-42 in.: Dark gray, fine sandy silt.
					3	62		
					2			
					2	63		
					4			
	60		8		3	64		
SS	38	29	64-69	54	2			Dark gray, clayey silt, wet, at 7 in., lens of fine sand.
					2	65		
					2			
					4	66		
					2			
					2	67		
					3			
					3	68		
					6			
	16		9		20	69		Dark gray fine to coarse sand and gravel with trace to little clayey
SS	10	29	69-70	5.4	33			silt.
					100/4	70		
						71		
								Bottom bit to 73 ft, spun 5 in. casing to 74 ft.
						72		
						73		
						74		
		74						
						75		
						76		
						77		
						78		
						79		
						80		

Logged by: Judi Shapiro Date: 29 March 1995

Drilling Contractor: A&W Environmental Drilling Driller: Phil Thornsbury

WELL SPECIFICATIONS:

Diam. of casing: _____ Screen Interval: _____ Sandpack: _____ Grout: _____

BOB: _____ Riser Interval: _____ Bentonite: _____ Cover: _____

EA Engineering, Science, and Technology, Inc.

LOG OF CORE BORING

Job. No.	Client	Location
29600.32	NORDIV, NAVFAC NCBC-Davisville	IR Program Site 09

Drilling Method: Mobile B-61 rig, using diamond core bit

Boring No. MW09-17D

Sheet 4 of 4

Coordinates:
Surface Elevation:
Casing Above Surface:
Reference Elevation:
Reference Description:

Core Bit Size	HX Core				Drilling Start	Drilling Finish
Water Level						Time
Time					920	1100
Date					Date	Date
Reference					03/30/95	03/30/95

Surface Conditions:

Core Run RQ % No.	Rec % FT	Strati-graph	Bedding/ Fractures (dip angl)	Fillings	Ova (ppm)	Depth in Feet	Graphic Log	Lithologic Log	Drilling Log
						70			
						71			
						72			
						73			
100/ 4.8/ 4.8	96/ 4.8/ 5.0					74		Dark gray, massive, phyllite 8-10 in. high angle fracture, 26-19 in. high angle fracture 48-54 in. high angle fracture.	0-1 ft = 10 minutes 1-2 ft = 5.5 minutes 2-3 ft = 6 minutes 3-4 ft = 5 minutes 4-5 ft = 4.5 minutes
						75			
						76			
						77		Minor healed fractures throughout-quartz filled	
						78			
						79		Bottom of boring at 79 ft BGS	Used approximately 150 gal of water
						80			
						81			
						82			
						83			
						84			
						85			
						86			
						87		Quartz HLD= Quartz healed fracture SLKS=Slickensides	
						88			

Logged by: Judi Shapiro

Date: 29 March 1995

Drilling Contractor: A&W Environmental Drilling

Driller: Phil Thornsbury

WELL SPECIFICATIONS:

Diam. of casing:
B.O.B.
Screen Interval:
Riser Interval:
Sandpack:
Bentonite:
Grout:
Cover:

EA Engineering, Science, and Technology, Inc.

LOG OF SOIL BORING

Coordinates: 196869.37N, 522471.69E
Surface Elevation: 19.1
Casing Above Surface 1.5
Reference Elevation: 20.43
Reference Description Top of well riser

Job. No.	Client	Location
29600.32	NORDIV, NAVFAC NCBC-Davisville	IR Program Site 09

Drilling Method: Mobile HD-B61 using 4.25 in. HSA

Boring No. MW09-18I

Sampling Method: 2 in. or 3 in. OD split-spoon
140-lb hammer

Sheet 1 of 2

Water Level					Drilling Start	Drilling Finish
Time						
Date						
Reference					0810	1030

Surface Conditions: Grass and brush covered; level.

Sample Type	Inches Drvn/In Recvrd	Dpth. Csg.	Samp. # /samp. depth	PID (ppm)	Blows per 6 in.	Depth in Feet		USCS Log	
SS	24 / 12	0	0-2	10	3, 6	0			Fill: Dark brown fine to coarse sand with trace silt and gravel, dry.
					6, 10	1	X		
						2		X	
						3			
						4			
SS	24 / 6	5	2 / 5-7	19.8	7, 1	5	X		Fill: Same as above.
					3, 10	6			
						7			
						8			
						9			
SS	24 / 0	10	3 / 10-12		7, 5	10			No recovery.
					5, 3	11			
						12			
						13			
						14			
SS	24 / 2	15	4 / 15-17		9, 9	15			Fill: Black organic fiberous, oily sheen, petroleum odor-mostly fine-medium sand, little gravel, wet.
					6, 6	16			
SS	24 / 18		5 / 17-19	32	2, 4	17			0-4 in.: Fill-same as above. 4-18 in.: Gray brown fine to coarse sand with trace silt, wet.
					14, 23	18			
					13, 23	19			0-18 in.: Dark gray medium coarse sand trace silt and gravel 18 in. 18-24 in.: Dark gray silt with trace to little very fine sand.
SS	24 / 24		6 / 19-21	11	33, 24	20			

Logged by: D. Acampora Date: 2 March 1995

Drilling Contractor: A&W Environmental Drilling Driller: Phil Thornsbury

L SPECIFICATIONS:

Diam. of casing: 2 in. SS Screen Interval: 17-27 ft BGS Sandpack 16-28 ft BGS Grout: 0-14 ft BGS
BOB: 33 ft Riser Interval: 1.3 ft AGS-17 ft BGS Bentonite 14-16 ft BGS Cover:

EA Engineering, Science, and Technology, Inc.

LOG OF SOIL BORING

Coordinates:
Surface Elevation:
Casing Above Surface:
Reference Elevation:
Reference Description:

Job. No.	Client	Location
29600.32	NORDIV, NAVFAC NCBC-Davisville	IR Program Site 09

Drilling Method: Mobile drill rig B-61 HD using 4.25 in. HS

Boring No. MW09-18I

Sampling Method: 2 in. or 3 in. OD stainless steel split-spoon 140-lb hammer

Sheet 2 of 2

Water Level					Drilling Start	Drilling Finish
Time						
Date						
Reference					0810	1030

Surface Conditions:

Sample Type	Inches Drvn/In Recvrd	Dpth. Csg.	Samp. # /samp. depth	PID (ppm)	Blows per 6 in.	Depth in Feet	USCS Log	Description
						0	920	
								Gray very fine sand; trace silt. Sand washed into auger.
SS	24		7		2	21		added 10 gal water to get rods out.
	24		21-23	7	6			
					7	22		
					10			
SS	24		8	32	11	23	925	Same as above.
	24		23-25	5.6	11			
					13	24		
					18			
SS	24		9	5	3	25	950	
	9.5		25-27	0.8	6			
					9	26		Dark gray clayey silt, wet and fine sand at 26 ft 3 in.
					11			
SS	24		10		4	27	954	Dark gray very fine sand with trace to little silt.
	13		27-29	8	4			
					6	28		
					8			
3 in. SS	24		11	4	4	29	1020	Same as above.
	18		29-31	4.6	6			
					9	30		
					11			
3 in. SS	24		12		1	31	1026	Same as above with lenses of dark gray silt with trace of very fine sand.
	24		31-33	3	4			
					5	32		
					2			
						33		Bottom of boring at 33 ft BGS.
						34		
						35		
						36		
						37		
						38		
						39		
						40		

Logged by: D. Acampora

Date: 2 March 1995

Drilling Contractor: A&W Environmental Drilling

Driller: Phil Thornsbury

WELL SPECIFICATIONS:

Diam. of casing:
BOB:
Screen Interval:
Riser Interval:
Sandpack:
Bentonite:
Grout:
Cover:

EA Engineering, Science, and Technology, Inc.

LOG OF SOIL BORING

Coordinates: 196508.43N, 522572.39E
Surface Elevation: 18.1
Casing Above Surface 1.7
Reference Elevation: 19.49
Reference Description Top of well riser

Job. No.	Client	Location
29600.32	NORDIV, NAVFAC NCBC-Davisville	IR Program Site 09

Drilling Method: 4.25 in. HSA, Mobile B-61 rig

Boring No. MW09-19I

Sampling Method: 2 in. split spoon; 3 in. split spoon, as noted. 140-lb hammer.

Sheet 1 of 2

Drilling	
Start	Finish
03/02/95	03/03/95
1400	0915

Water Level				
Time				
Date				
Reference				

Surface Conditions: Grassy with small trees and shrubs.

Sample Type	Inches Drvn/In Recvrd	Dpth. Csg.	Samp. # /samp. depth	PID (ppm)	Blows per 6 in.	Depth in Feet	USC Log	
2 in. SS	24		1		2	0		Fill: Dark brown fine-medium sand and gravel up to 0.25, dry with trace silt
	8	0	0-2	7.4	3			and roots.
					5	1		
					3			
						2		
						3		
						4		
2 in. SS	16		2		3	5		Fill: Same as above, dry.
	5	5	5-7	3	3			
					100/4	6		
						7		
						8		
						9		
2 in. SS	24		3		31	10		0-6 in.: Fill-black medium and and gravel up to 0.25 in. , wire, moist petroleum
	12	10	10-12	30	34			odor.
					26	11		6-12 in.: Fill-moderate brown-grayish brown fine medium sand and gravel up to
					21			0.5 in. with trace silt moist.
						12		
						13		
						14		
3 in. SS	24		4		100/4	15		0-6 in. No recovery, refusal on cobble drill to 15.5 in., try again.
	6	15	15-17	20	34			Black fine medium sand organics, wood fibers, petroluem odor, wet.
					35	16		
					9			
2 in. SS	24		5		2	17		0-2 in. Reddish-brown peat, little fine sand, wet.
	16		17-19	11.8	3			2-16 in. Dark brown fine sand and silt, wet.
					2	18		
					6			
2 in. SS	24		6		8	19		Banded (1-2 in.) dark gray and moderate greenish-gray fine sand with trace to
	20		19-21	4.6	6			and clayey silt wet.
					3	20		
					11			

Logged by: D. Street Date: 2-3 March 1995

Drilling Contractor: A&W Environmental Drilling Driller: Don Sylvia

WELL SPECIFICATIONS:

Diam. of casing: 2 in. SS Screen Interval: 20-30 ft BGS Sandpack 19-31 ft BGS Grout: 0-15 ft BGS

BOB: 31 ft Riser Interval: 1.4 ft AGS-20 ft BGS Bentonite 15-19 ft BGS Cover:

EA Engineering, Science, and Technology, Inc.

LOG OF SOIL BORING

Coordinates:
Surface Elevation:
Casing Above Surface:
Reference Elevation:
Reference Description:

Job. No.	Client	Location
29600.32	NORDIV, NAVFAC NCBC-Davisville	IR Program Site 09

Drilling Method: Mobile B-61 rig

Boring No. MW09-19I

Sampling Method: 20-in. or 3-in. SS with 140-lb hammer

Sheet 2 of 2

Water Level					Drilling Start	Drilling Finish
Time						
Date						
Reference						

Sample Type	Inches Drvn/In Recvrd	Dpth. Csg.	Samp. # /samp. depth	PID (ppm)	Blows per 6 in.	Depth in Feet	USCS Log	Surface Conditions:
						20		
2 in. SS	24 / 8		7 / 21-23	72	2 / 7	21		Same as above - no banding.
					11 / 9	22		
2 in. SS	24 / 24		8 / 23-25	3.2	11 / 11	23		0-4 in.: Same as above. 4-24 in.: Dark gray very fine sand with trace to little clayey silt.
					15 / 17	24		
2 in. SS	24 / 24		9 / 25-27	3	8 / 15	25		Dark gray very fine-fine sand with trace to and clayey silt, wet.
					18 / 17	26		
3 in. SS	24 / 18		10 / 27-29	26	8 / 8	27		0-14 in.: Same as above. 14-18 in.: Dark gray clayey silt, trace to and sand, wet.
					7 / 5	28		
3 in. SS	24 / 24		11 / 29-31	100	3 / 6	29		Same as above 14-18 in., solvent odor.
					5 / 6	30		
2 in. SS	24 / 22		12 / 31-33	100	3 / 6	31		Same as above.
					4 / 6	32		
						33		Bottom of boring at 33 ft BGS.
						34		
						35		
						36		
						37		
						38		
						39		
						40		

Logged by: D. Street

Date: 2-3 March 1995

Drilling Contractor: A&W Environmental Drilling

Driller: Don Sylvia

WELL SPECIFICATIONS:

Diam. of casing: _____ Screen Interval: _____ Sandpack: _____ Grout: _____

BOB: _____ Riser Interval: _____ Bentonite: _____ Cover: _____

EA Engineering, Science, and Technology, Inc.

LOG OF SOIL BORING

Coordinates: 196411.83N, 522683.12E
Surface Elevation: 17.4
Casing Above Surface 1.5
Reference Elevation: 18.63
Reference Description Top of well riser

Job. No.	Client	Location
29600.32	NORDIV, NAVFAC NCBC-Davisville	IR Program Site 09

Drilling Method: Mobile B-61 rig

Boring No. MW09-20S

Sampling Method: 2-in. SS driven by 140-lb hammer

Sheet 1 of 2

Water Level					Drilling Start	Drilling Finish
Time					03/02/95	03/03/95
Date						
Reference					1530	0840

Surface Conditions: Level, grassy between road and (20 ft) bay.

Sample Type	Inches Drvn/In Recvrd	Dpth. Csg.	Samp. # /samp. depth	PID (ppm)	Blows per 6 in.	Depth in Feet	USCS Log	
SS	24 / 1	0	0 / 0-2	3	2, 4	0		Fill: Dark brown fine to coarse sand and gravel will trace silt and roots, dry.
					4, 7	1		
						2		
						3		
						4		
SS	24 / 8	5	5-7		7, 11	5		Fill: Grayish brown and dark reddish brown organic, medium coarse sand, little gravel up to 0.5 in., roots dry.
					13, 15	6		
						7		
						8		
						9		
SS	24 / 4	10	10-12	4.4	11, 7	10		Fill: Dark brown fine-medium sand with trace silt and fine gravel, dry, (insufficient sample volume).
					18, 21	11		
						12		
						13		
						14		
SS	24 / 35	15	15-17	7.8	9, 21	15		Fill: Brown fine-medium, sand with trace to some silt, and copper wire, nail, dry.
					34, 45	16		
						17		Bottom 1 in. wet.
						18		
						19		
						20		

Logged by: D. Acampora Date: 3 March 1995

Drilling Contractor: A&W Environmental Drilling Driller: Phil Thornsbury

WELL SPECIFICATIONS:

Diam. of casing: 2 in. PVC Screen Interval: 10-20 ft BGS Sandpack 8-21 ft BGS Grout: 0-5.5 ft BGS
BOB: 24 ft Riser Interval: 1.3 ft AGS- 10 ft BGS Bentonite 5.5-8 ft BGS Cover:

EA Engineering, Science, and Technology, Inc.

LOG OF SOIL BORING

Coordinates:
Surface Elevation:
Casing Above Surface:
Reference Elevation:
Reference Description:

Job. No.	Client	Location
29600.32	NORDIV, NAVFAC NCBC-Davisville	IR Program Site 09

Drilling Method: Mobile B-61 rig using 4.25 in. ID HSA

Boring No. MW09-20S

Sampling Method: 2-in. split spoon driven by 140-lb hammer

Sheet 2 of 2

Water Level					Drilling Start	Drilling Finish
Time						
Date						
Reference						

Surface Conditions:

Sample Type	Inches Drvn/In Recvrd	Dpth. Csg.	Samp. # /samp. depth	PID (ppm)	Blows per 6 in.	Depth in Feet	USCS Log	
SS	24 / 0	20	20-22		2, 3	20		No recovery.
					6, 7	21		
3 in. SS	24 / 14		22-24			22		Medium gray silt to clayey silt with fine trace to little fine sand, organic odor.
						23		
						24		Bottom of boring at 24 ft BGS.
						25		
						26		
						27		
						28		
						29		
						30		
						31		
						32		
						33		
						34		
						35		
						36		
						37		
						38		
						39		
						40		

Logged by: D. Acampora

Date: 3 March 1995

Drilling Contractor: A&W Environmental Drilling

Driller: Phil Thornsbury

WELL SPECIFICATIONS:

Diam. of casing:
BOB:
Screen Interval:
Riser Interval:
Sandpack:
Bentonite:
Grout:
Cover:

EA Engineering, Science, and Technology, Inc.

LOG OF SOIL BORING

Coordinates: 196401.97N 522675.54E
Surface Elevation: 17.3
Casing Above Surface 1.7
Reference Elevation: 18.69
Reference Description Top of well riser

Job. No.	Client	Location
29600.32	NORDIV, NAVFAC NCBC-Davisville	IR Program Site 09

Drilling Method: Mobile B-61 drill rig HSA

Boring No. MW09-20I

Sampling Method: 2-in., 3-in., split-spoon driven by 140-lb hammer.

Sheet 1 of 2

Water Level					Drilling Start	Drilling Finish
Time					1300	1500
Date						
Reference					03/03/95	03/03/95

Surface Conditions: Grassy, brush covered, south of road about 25 ft from bay.

Sample Type	Inches Drvn/In Recvrd	Dpth. Csg.	Samp. # /samp. depth	PID (ppm)	Blows per 6 in.	Depth in Feet	USCS Log	
						0	1300	Augered to 15 ft BGS
						1		Refer to the MW09-20S boring log for the 0-15 ft soil description.
						2		
						3		
						4		
						5		
						6		
						7		
						8		
						9		
						10		
						11		
						12		
						13		
						14		
SS	24 14	15	1 15-17		16 20	15		Fill: Dark gray silt witih some fine-medium sand; trace gravel up to 0.5 in. with glass and a 6-in. lens of fine white sand, wet.
					21 23	16		
SS	24 4	15	2 17-19		31 31	17		Brown fine-medium sand with trace silt, wet (auger to 20 ft).
					9 5	18		
						19		
						20		

Logged by: D. Acampora

Date: 6 March 1995

Drilling Contractor: A&W Environmental Drilling

Driller: Phil Thornsbury

WELL SPECIFICATIONS:

Diam. of casing: 2 in. SS
BOB: 36 ft
Screen Interval: 22-32 ft BGS
Riser Interval: 1.4 ft AGS-22 ft BGS
Sandpack 21-32.5 ft BGS
Bentonite 19-21 ft BGS
Grout:
Cover:

EA Engineering, Science, and Technology, Inc.

LOG OF SOIL BORING

Coordinates:
Surface Elevation:
Casing Above Surface:
Reference Elevation:
Reference Description:

Job. No.	Client	Location
29600.32	NORDIV, NAVFAC NCBC-Davisville	IR Program Site 09

Drilling Method: Mobile B-61 rig with 8.25 in. HSA

Boring No. MW09-20I

Sampling Method: 2-in. or 3-in. split-spoon driven by 140-lb hammer

Sheet 2 of 2

					Drilling	
Water Level					Start	Finish
Time						1458
Date						
Reference					03/03/95	03/03/95

Sample Type	Inches Drvn/In Recvrd	Dpth. Csg.	Samp. # /samp. depth	PID (ppm)	Blows per 6 in.	Depth in Feet	USCS Log	Surface Conditions:
SS	24		3		21	20		0-18 in. Peat.
	24	20	20-22		18			18-24 in. Organic silt.
				6.5	7	21		
					4			
3 in. SS	24		4	0.4	16	22		Dark gray silt with trace to and fine sand, wet.
	12	20	22-24		16			
					17	23		
					18			
						24		
								Augered to 25 ft BGS.
3 in. SS	24		55	0.0	8	25		Dark gray very fine sand, little silt, organic odor, wet.
	18	25	25-27		17			
					13	26		
					11			
SS	24		56		4	27		Dark gray fine sand, trace to little silt, wet.
	24	25	27-29		5			
					5	28		
					7			
						29		
								Augered to 30 ft BGS.
SS	24		7		2	30		Gray fine sand with trace silt, wet.
	24	30	30-32		3			Dark gray with trace very fine sand at 31 ft BGS, wet.
					6	31		
					7			
SS	24		8		2	32		Dark gray silt trace fine sand, wet.
	16		32-34		4			
					4	33		
					6			
SS	24		9		2	34		Dark gray silt with trace very fine sand, and occassional very thin lenses of
	20		34-36		4			very fine sand or clayey silt.
					4	35		
					5			
						36		Bottom of boring at 36 ft BGS.
						37		
						38		
						39		
						40		

Logged by: D. Acampora

Date: 6 March 1995

Drilling Contractor: A&W Environmental Drilling

Driller: Phil Thornsbury

WELL SPECIFICATIONS:

Diam. of casing:
BOB:
Screen Interval:
Riser Interval:
Sandpack:
Bentonite:
Grout:
Cover:

EA Engineering, Science, and Technology, Inc.

LOG OF SOIL BORING

Coordinates: 196386.71N, 522674.78E
Surface Elevation: 17.3
Casing Above Surface 2.0
Reference Elevation: 19.15
Reference Description Top of well riser

Job. No.	Client	Location
29600.32	NORDIV, NAVFAC NCBC-Davisville	IR Program Site 09

Drilling Method: 8.25 in. HSA, rollerbit and rock coring, Mobile B-61 rig.

Boring No. MW09-20D

Sampling Method: 2 in. OD split-spoon driven by 140 lb hammer

Sheet 1 of 3

Water Level					Drilling Start	Drilling Finish
Time					0915	1600
Date						
Reference						

Surface Conditions:

Sample Type	Inches Drvn/In Recvrd	Dpth. Csg.	Samp. # /samp. depth	PID (ppm)	Blows per 6 in.	Depth in Feet	USCS Log	
						30		
						31		Refer to the MW09-20S and MW09-20I boring logs for the 0-36 ft soil description.
						32		Augured to 35 ft (9 March 1995).
						33		
						34		
						35		Rollerbit to 36 ft (14 March 1995).
						36		
						37		
						38		
SS	24		1		WOR	39		Dark gray clayey silt, wet (15 March 1995).
	7	39	39-41	0.4	WOR			
					2	40		
					5			
						41		
						42		
						43		
SS	24		2		WOR	44		Same as above with minor silt partings.
	11	39	44-46	0.45	3			
					7	45		
					7			
						46		
						47		
						48		
SS	24		3		3	49		Dark gray clayey silt, trace of very fine sand.
	18	39	49-51	0.4	4			
					5	50		
					6			

Logged by: D. Acampora Date: 10 March 1995

Drilling Contractor: A&W Environmental Drilling Driller: Phil Thornsbury

WELL SPECIFICATIONS:

Diam. of casing: 2 in. PVC Screen Interval: 51.5-61.5 ft BGS Sandpack 50.5-6.2 ft BGS Grout: 0-48.5 ft BGS

BOB: 73 ft Riser Interval: +1.5 ft AGS, 51.5 ft BG Bentonite 48.5-50.5 ft BGS Cover:

EA Engineering, Science, and Technology, Inc.

LOG OF SOIL BORING

Coordinates:
Surface Elevation:
Casing Above Surface:
Reference Elevation:
Reference Description:

Job. No.	Client	Location
29600.32	NORDIV, NAVFAC NCBC-Davisville	IR Program Site 09

Drilling Method: 8.25 in. HSA and rollerbit Mobile B-61 rig

Boring No. MW09-20D

Sampling Method: 2 in. split-spoon driven 2 ft with 140-lb hammer. HX rock coring.

Sheet 2 of 3

Water Level					Drilling Start	Drilling Finish
Time					0915	1600
Date						
Reference						

Sample Type	Inches Drvn/In Recvrd	Dpth. Csg.	Samp. # /samp. depth	PID (ppm)	Blows per 6 in.	Depth in Feet	USCS Log	Surface Conditions:
						50		
						51		
						52		
						53		
SS	24 22	39	4 54-56	0.4	1 3	54		Dark gray silt and lenses with some very fine sand; no partings.
					1 1	55		
						56		
						57		
						58		
SS	24 20	39	5 59-61	0.2	2 3	59		Dark gray very fine sand with trace to little silt.
					3 6	60		
						61		
						62		(62.5 strata changes).
						63		
SS	24 10	39	6 64-66	0.8		64		Medium gray sand with some angular gravel, poorly sorted-rock frags trace silt.
						65		
						66		Bedrock at 66.5 ft, set 5 in. diameter steel casing.
						67		
						68		Cored rock from 68 to 73 ft BGS.
						69		
						70		

Logged by: D. Acampora Date: 10 March 1995

Drilling Contractor: A&W Environmental Drilling Driller: Phil Thornsbury

WELL SPECIFICATIONS:

Diam. of casing: _____ Screen Interval: _____ Sandpack: _____ Grout: _____

BOB: _____ Riser Interval: _____ Bentonite: _____ Cover: _____

EA Engineering, Science, and T chnology, Inc.

LOG OF CORE BORING

Job. No.	Client	Location
29600.32	NORDIV, NAVFAC NCBC-Davisville	IR Program Site 09

Drilling Method: Mobile B-61 rig HX core bit

Boring No. MW09-20D

Sheet 3 of 3

Coordinates:
Surface Elevation:
Casing Above Surface:
Reference Elevation:
Reference Description:

Core Bit Size HX					Drilling Start	Drilling Finish
Water Level					Time 1500	Time 1600
Time						
Date					Date began	Date coring
Reference						

Surface Conditions:

Core Run RQ % No.	Rec % FT	Strati-graph	Bedding/ Fractures (dip angl)	Fillings	Ova (ppm)	Depth in Feet	Graphic Log	Lithologic Log	Drilling Log
						60			
						61			
						62			
						63			
						64			
						65			
						66			
						67			
8.4	100					68		Massive medium gray quartzite. Some	1 ft/9 min
	60							healed fractures. Vugs with a few quartz	
						69		crystals.	1 ft/4 min
						70			1 ft/5 min
						71			1 ft/6 min
						72		1.5 in. - 2 ft fracture zone. Healed quartz	1 ft/8.5 min
								fracture.	
						73			
								Bottom of boring at 73 ft BGS.	
						74			
						75			
						76			
						77			
						78			
						79			

Logged by: D. Acampora

Date: 14 March 1995

Drilling Contractor: A&W Environmental Drilling

Driller: Phil Thornsbury

WELL SPECIFICATIONS:

Diam. of casing: 2 in. PVC
B.O.B. 73 ft
Screen Interval: 51.5-61.5 ft
Riser Interval: 1.5-51.5 ft
Sandpack: 49.5-62 ft
Bentonite: 47.5-49.5 ft
Grout: 0-47.5 ft
Cover:

EA Engineering, Science, and Technology, Inc.

LOG OF CORE BORING

Job. No. 29600.32	Client NORDIV, NAVFAC NCBC-Davisville
Location IR Program Site 09	
Drilling Method: 8.25-in. ID HSA and rock coring Mobile B-61 rig 5.78 in. rollerbit	
Boring No. MW09-20R	
Sheet 1 of 2	

Coordinates: 19639625N, 522670.81E
Surface Elevation: 17.3
Casing Above Surface: 2.2
Reference Elevation: 19.06
Reference Description: Top of well riser

Core Bit Size NX					Drilling Start	Drilling Finish
Water Level					Time	Time
Time						
Date					Date	Date
Reference						

Surface Conditions:

Core Run RQ % No.	Rec % FT	Strati-graph	Bedding/ Fractures (dip angl)	Fillings	Ova (ppm)	Depth in Feet	Graphic Log	Lithologic Log	Drilling Log
						60		Refer to the MW09-20S, MW09-20I, and MW09-20D for the 0-70 ft BGS soil and rock descriptions	9 March 1995 augered to 35 ft BGS
						61			14 March 1995 rollerbit (drill) to 66 ft BGS
						62			
						63			
						64			
						65			
							RX		
						66			Set 6 in. diameter casing to 66 ft
						67			
						68			
Run 1						69		Rock seemed very fractured	Constantly falling in borehole. Set in 4 in. casing to 70.0 ft
100	100/60					70		Light olive gray coarse sandstone. Vugs filled with quartz crystalls. Void spaces partially filled with quartz. Vugs with quartz; mica, quartz filled fractures. Slicken sides with Fe staining.	Set 4 in. casing to 70.0 ft
						71			1 in./5.5 min.
						72			1 in./6.5 min
						73			1 in./7.5 min
Run 2						74			1 in./9.5 min.
	100/60					75		Gray quartzite with slickened sides and fractures at 120 C.	1/12 min.
						76			1 in./6.5 min.
						77			1 in./9 min.
						78			1 in./8 min.
						79			1 in./10 min.
						80			1 in./8.5 min.

Logged by: D. Acampora Date: 17 March 1995

Drilling Contractor: A&W Environmental Drilling Driller: Phil Thornsbury

WELL SPECIFICATIONS:

Diam. of casing: 2 in. PVC Screen Interval: Sandpack: Grout:
B.O.B. 84.5 ft Riser Interval: Bentonite: Cover:

EA Engineering, Science, and Technology, Inc.

LOG OF CORE BORING

Job. No.	Client	Location Site 9
29600.32	NCBC Davisville	

Drilling Method: 8.25 in. ID HSA and rock coring
mobile B-61 rig, NX core bit

Boring No. MW09-20R

Sheet 2 of 2

Coordinates:
Surface Elevation:
Casing Above Surface:
Reference Elevation:
Reference Description:

Core Bit Size NX					Drilling	
Water Level					Start	Finish
Time					Time	Time
Date					Date	Date
Reference						

Surface Conditions:

Core Run RQ % No.	Rec % FT	Strati-graph	Bedding/ Fractures (dip angl)	Fillings	Ova (ppm)	Depth in Feet	Graphic Log	Lithologic Log	Drilling Log
Run 3						80	X		1 in./6.5 min.
100	100							Gray quartzite.	
	48					81			1 in./8 min.
							X		
						82		Healed fracture. Light gray color.	1 in./6.5 min.
							X	Darker gray chalcopyrite and quartz	
						83		filled vein. One minor healed fracture.	1 in./7.0 min.
						84			
								Bottom of boring at 84.5 ft BGS	
						85			
						86			
						87			
						88			
						89			
						90			
						82			
						83			
						84			
						85			
						86			
						87			
						88			
						89			
						90			

Logged by: _____ Date: _____

Drilling Contractor: _____ Driller: _____

WELL SPECIFICATIONS:

Diam. of casing: _____ Screen Interval: _____ Sandpack: _____ Grout: _____

B.O.B.: _____ Riser Interval: _____ Bentonite: _____ Cover: _____

EA Engineering, Science, and Technology, Inc.

LOG OF SOIL BORING

Coordinates: 196373.48N, 522337.67E
Surface Elevation: 11.2
Casing Above Surface 1.7
Reference Elevation: 12.62
Reference Description Top of well riser

Job. No.	Client	Location
29600.32	NORDIV, NAVFAC NCBC-Davisville	IR Program Site 09

Drilling Method: 4.25 in. HSA, Mobile B-61 rig

Boring No. MW09-21S

Sampling Method: 2-in. or 3-in. split-spoon driven by 140 lb hammer

Sheet 1 of 2

Water Level					Drilling Start	Drilling Finish
Time					1115	1308
Date						
Reference						

Sample Type	Inches Drvn/In Recvrd	Dpth. Csg.	Samp. # /samp. depth	PID (ppm)	Blows per 6 in.	Depth in Feet	USCS Log	Surface Conditions:
SS	24 / 8	0	1 / 0-2		4, 2	0		Fill: Dark brown, moist silty fine to coarse sand; with trace gravel; organic roots, glass, (2-in. spoon) not enough sample; used 3-in. spoon in the same interval.
					2, 3	1		Same as above, dry; (4, 1, 3, 3, blow counts for 3-in. spoon).
						2		
						3		
						4		
SS	24 / 0.5	5	2 / 5-7			5		Fill: Brown to gray, fine to coarse sand with trace to little gravel and trace silt; wire, wood, dry. Used both the 2-in. and 3-in. diameter split-spoons to obtain sufficient sample volume.
						6		
						7		
						8		
						9		
2 in. SS	24 / 18	10	3 / 10-12			10		0-14 in. Fill: Dark gray silt and silty sand and peat. 14-18 in. Fill: Gray. Silty fine-medium sand, moist roots.
						11		
						12		
						13		
						14		
2 in. SS	24 / 15	15	4 / 15-17			15		Dark gray silt (occassionally laminated) with occasional thin lenses of very fine sand.
						16		
						17		
						18		
						19		
						20		

Logged by: D. Acampora Date: 6 March 1995

Drilling Contractor: A&W Environmental Drilling Driller: Don Sylvia

WELL SPECIFICATIONS:

Diam. of casing: 2 in. Screen Interval: 6-16 ft BGS Sandpack 5-16.5 ft BGS Grout: 0-31 ft BGS
BOB: 22 ft Riser Interval: 1.5 ft AGS-6 ft BGS Bentonite 3-5 ft BGS Cover:

EA Engineering, Science, and Technology, Inc.

LOG OF SOIL BORING

Coordinates:
Surface Elevation:
Casing Above Surface:
Reference Elevation:
Reference Description:

Job. No.	Client	Location
29600.32	NORDIV, NAVFAC NCBC-Davisville	IR Program Site 09

Drilling Method: 4.25 in. HSA, Mobile B-61 rig

Boring No. MW09-21S

Sampling Method: 2-in. or 3-in. split-spoon driven by 140 lb-hammer

Sheet 2 of 2

Water Level					Drilling Start	Drilling Finish
Time						1308
Date						
Reference						

Sample Type	Inches Drvn/In Recvrd	Dpth. Csg.	Samp. # /samp. depth	PID (ppm)	Blows per 6 in.	Depth in Feet	USCS Log	Surface Conditions:
2 in. SS	24		4		1	20		Same as above (2-in. spoon).
	12.5	20	20-22		3			
					4	21		
					4			
						22		Bottom of boring at 22 ft BGS.
						23		
						24		
						25		
						26		
						27		
						28		
						29		
						30		
						31		
						32		
						33		
						34		
						35		
						36		
						37		
						38		
						39		
						40		

Logged by: D. Acampora

Date: 6 March 1995

Drilling Contractor: A&W Environmental Drilling

Driller: Don Sylvia

WELL SPECIFICATIONS:

Diam. of casing:
Screen Interval:
Sandpack:
Grout:
BOB:
Riser Interval:
Bentonite:
Cover:

EA Engineering, Science, and Technology, Inc.

LOG OF SOIL BORING

Coordinates: 196816.72N, 522229.04E
Surface Elevation: 7.6
Casing Above Surface 1.4
Reference Elevation: 8.70
Reference Description Top of well riser

Job. No.	Client	Location
29600.32	NORDIV, NAVFAC NCBC-Davisville	IR Program Site 09

Drilling Method: Mobile B-61 drill rig using 4.25 in. HSA

Boring No. MW09-22S

Sampling Method: 2-in. and 3-in. SS split-spoon driven 24 in. with a 140-lb hammer falling 30 in.

Sheet 1 of 1

Water Level					Drilling Start	Drilling Finish
Time					0800	0840
Date						
Reference						

Surface Conditions: Level, grassy, just east of Sanford Road.

Sample Type	Inches Drvn/In Recvrd	Dpth. Csg.	Samp. # /samp. depth	PID (ppm)	Blows per 6 in.	Depth in Feet		USCS Log	
3 in. SS	24 / 18	0	1 / 0-2	0.8	6 / 9	0			Gray, organic, mostly sand with gravel, grading into olive gray silty medium coarse sand with trace of silt, moist.
					14 / 14	1			
						2			
						3			
						4			
3 in. SS	24 / 19	5	2 / 5-7	0.6	2 / 1	5			0 - 3 in. Moist olive gray silty sand. 3 - 11 in. Peat and olive gray medium sand.
					2 / 6	6			11- 19 in. Reddish brown coarse silty sand, roots, wet.
						7			
						8			
						9			
2 in. SS	24 / 23	10	3 / 10-12	0.6	4 / 6	10	4 / 6		Gray very fine sand with trace silt.
					8 / 9	11	8 / 9		
						12			Bottom of boring at 12 ft BGS.
						13			
						14			
						15			
						16			
						17			
						18			
						19			
						20			

Logged by: Denise Acampora Date: 7 March 1995

Drilling Contractor: A&W Environmental Drilling Driller: Phil Thornsbury

WELL SPECIFICATIONS:

Diam. of casing: 2 in. PVC Screen Interval: 5-10 ft BGS Sandpack 4.5-10.5 ft BGS Grout: 0-3.5 ft BGS

BOB: 12 ft Riser Interval: 1.5 ft AGS-5 ft BGS Bentonite 3.5-4.5 ft BGS Cover:

EA Engineering, Science, and Technology, Inc.

LOG OF SOIL BORING

Coordinates: 196845.78N, 522766.63E
Surface Elevation: 18.5
Casing Above Surface 1.7
Reference Elevation: 19.84
Reference Description Top of well riser

Job. No.	Client	Location
29600.32	NORDIV, NAVFAC NCBC-Davisville	IR Program Site 09

Drilling Method: Mobile B-61 drill rig using 4.25 in. HSA

Boring No. MW09-23S

Sampling Method: 2-in. and 3-in. split-spoon driven 24 in. with a 140-lb hammer falling 30 in.

Sheet 1 of 2

Water Level					Drilling Start	Drilling Finish
Time					0914	1050
Date						
Reference						

Sample Type	Inches Drvn/In Recvrd	Dpth. Csg.	Samp. # /samp. depth	PID (ppm)	Blows per 6 in.	Depth in Feet	USCS Log	Surface Conditions:
2 in. SS	24	0	S-1	1	2	0		Fill: Dark brown fine-medium sand with trace of silt and gravel, glass, plastics,
	1		0-2		2	915		organics, moist.
					2	1		
					1			
						2		
						3		
						4		
2 in. SS	24	5	S-2	10	3	5		0-4 in. Fill: Dark brown, fine-coarse sand and gravel up tp 1 in.
	12		5-7		3	930		4-10 in. Reddish brown fine-medium sand, gravel, glass.
					6	6		10-12 in. Dark gray brown fine-coarse sand, gravel up to 1 in.
					7			
						7		
						8		
						9		
2 in. SS	24	10	S-3	12.4	8	10		Fill: Dark gray brown, mottled with rust colored, fine-coarse sand, gravel up
	8		10-12		11	945		to 1 in. with trace silt, plastics, and glass; moist.
					8	11		
					12			
						12		
						13		
						14		
2 in. SS	24	15	S-4	8.2	6	15		Fill: Dark brown to black fine-coarse sand with little silt, glass, metal, moist.
	6		15-17		21	955		
					9	16		
					14			
						17		
						18		
						19		
						20		

Logged by: Judi Shapiro Date: 7 March 1995

Drilling Contractor: A&W Environmental Drilling Driller: Don Sylvia

WELL SPECIFICATIONS:

Diam. of casing: 2 in. ID Screen Interval: 15-25 ft BGS Sandpack 13-25.5 ft BGS Grout: 0-9.6 ft BGS

BOB: 26 ft Riser Interval: 1.5 ft AGS- 5 ft BGS Bentonite 9.6-13 ft BGS Cover:

EA Engineering, Science, and Technology, Inc.

LOG OF SOIL BORING

Coordinates:
Surface Elevation:
Casing Above Surface:
Reference Elevation:
Reference Description:

Job. No.	Client	Location
29600.32	NORDIV, NAVFAC NCBC-Davisville	IR Program Site 09

Drilling Method: Mobile B-61 drill rig using 4.25 in. HSA

Boring No. MW09-23S

Sampling Method: 2-in. and 3-in. split-spoon as noted with a 140-lb hammer

Sheet 2 of 2

Water Level					Drilling Start	Drilling Finish
Time					0914	1050
Date						
Reference						

Sample Type	Inches Drvn/In Recvrd	Dpth. Csg.	Samp. # /samp. depth	PID (ppm)	Blows per 6 in.	Depth in Feet	USCS Log	Surface Conditions:
2 in. SS	24	20	S-5		2	20		0-2 in. - Dark brown sandy silt with organics, wet.
	3		20-22		2	1005		2-3 in. - Gray fine sandy silt, wet.
					2	21		
					6			
						22		
						23		
3 in. SS	24	24	S-6	1.4	12	24		Gray sandy silt, some metal debris, wet.
	17		24-26		17	1030		
					19	25		
					22			
						26		Bottom of boring at 26 ft BGS.
						27		
						28		
						29		
						30		
						31		
						32		
						33		
						34		
						35		
						36		
						37		
						38		
						39		
						40		

Logged by: Judi Shapiro

Date: 7 March 1995

Drilling Contractor: A&W Environmental Drilling

Driller: Don Sylvia

WELL SPECIFICATIONS:

Diam. of casing: _____ Screen Interval: _____ Sandpack: _____ Grout: _____

BOB: _____ Riser Interval: _____ Bentonite: _____ Cover: _____

EA Engineering, Science, and Technology, Inc.

LOG OF SOIL BORING

Coordinates: 196840.75N, 522762.33E
Surface Elevation: 8.9
Casing Above Surface 1.9
Reference Elevation: 10.49
Reference Description Top of well riser

Job. No.	Client	Location
29600.32	NORDIV, NAVFAC NCBC-Davisville	IR Program Site 09

Drilling Method: Mobile B-61 drill rig using 4.25 in. HSA

Boring No. MW09-23D

Sampling Method: 3 in. (2-in. long) or 2-in. ID 4 ft long spoon driven with 140-lb hammer

Sheet 1 of 4

Water Level				
Time				
Date				
Reference				

Drilling	
Start	Finish
0850	1400

Surface Conditions:

Sample Type	Inches Drvn/In Recvrd	Dpth. Csg.	Samp. # /samp. depth	PID (ppm)	Blows per 6 in.	Depth in Feet	USCS Log	
						20		Refer to the MW09-23S boring log for the 0-26 ft BGS soil descriptions.
						21		
						22		
					7	23		No recovery- resampled 25-27 ft with 3 in. spoon.
					14			
					14	24		
					18			
3 in. SS	24	25	S-1	0	18	25		Dark gray silt with trace of very fine sand. (Metal scrap at top, probably
	17		25-27		18			blocked 2 in. spoon from obtaining sample.)
					24	26		
					24			
3 in. SS	48		S-2/3	3.4	12	27		0-2 in. - Saturated, gray clayey silt.
	39		27-31		17			2-10 in. - Olive green-brown silt with trace very fine sand and occasional
					16	28		sandy partings, wet.
					19			10-15 in. - Gray sandy silt, dry to moist.
					20	29		15-27 in. - Same as above.
					19			27-39 in. - Same as above, wet.
					20	30		
					25			
						31		
						32		
						33		
						34		
						35		
						36		
						37		
						38		
						39		
						40		

Logged by: Judi Shapiro Date: 17 March 1995

Drilling Contractor: A&W Environmental Drilling Driller: Don Sylvia

WELL SPECIFICATIONS:

Diam. of casing: 2 in. PVC Screen Interval: 48-58 ft BGS Sandpack 47-58.5 ft BGS Grout: 0-44 ft BGS

BOB: 73.3 ft Riser Interval: 2.0 ft AGS- 48.0 ft BGS Bentonite 44-47 ft BGS Cover:

EA Engineering, Science, and Technology, Inc.

LOG OF SOIL BORING

Coordinates:
Surface Elevation:
Casing Above Surface:
Reference Elevation:
Reference Description:

Job. No.	Client	Location
29600.32	NORDIV, NAVFAC NCBC-Davisville	IR Program Site 09

Drilling Method: Mobile B-61 drill rig using 4.25 in. HSA rollerbit, corebit

Boring No. MW09-23D

Sampling Method: 3-in. ID, 5-ft long SS driven with 300-lb hammer

Sheet 3 of 4

Water Level					Drilling Start	Drilling Finish
Time						
Date					0830	1500
Reference						

Sample Type	Inches Drvn/In Recvrd	Dpth. Csg.	Samp. # /samp. depth	PID (ppm)	Blows per 6 in.	Depth in Feet	USCS Log	Surface Conditions:
4 in. SS	60				5	50		6-24 in. Same as above, lower clay content.
	36				4			24-36 in. Same as above, varying clay content, lens' of fine sand throughout
					6	51		sample.
					7			
					8	52		
					7			
					6	53		
					7			
5 in. SS	60	33	S-5	3.8	4	54		0-3 in. Dark gray clayey silt, with trace very fine sand, wet
	41		54-59		3			3-33 in. Dark gray clayey silt, wet.
					2	55		33-41 in. Dark gray very fine sandy, clayey silt, wet.
					2			
					4	56		
					3			
					3	57		
					4			
					5	58		
					5			
6 in. SS	60	33	S-6	3.8	4	59		0-8 in. Dark gray very fine sand, clayey silt, wet.
	25		59-64		3			8 in. Olive green gray clay lens.
					2	60		8-17 in. Same as above , varying clay content.
					4			17-25 in. Dark gray fine sandy, clayey silt with subrounded gravel, wet.
					10	61		
					14			
					16	62		
					10			
					10	63		
					7			
7 in. SS	52	64*	S-7	2.6	20	64		0-3 in. Dark gray fine-medium sand with angular gravel, wet.
	14		64-68.3		13			3-7 in. Dark gray fine-medium sand with medium to coarse gravel.
					10	65		7-10 in. Cobble.
					13			10-14 in Dark gray fine sandy clayey silt with angular gravel.
					18	66		
					7			
					3	67		Cored 68 ft 3 in. - 73 ft 3 in.
					7			
					75/4	68		* 5 in. temporary casing.
						69		
						70		

Logged by: _____ Date: _____

Drilling Contractor: _____ Driller: _____

WELL SPECIFICATIONS:

Diam. of casing: _____ Screen Interval: _____ Sandpack: _____ Grout: _____

BOB: _____ Riser Interval: _____ Bentonite: _____ Cover: _____

EA Engineering, Science, and Technology, Inc.

LOG OF CORE BORING

Job. No.	Client	Location
29600.32	NORDIV, NAVFAC NCBC-Davisville	IR Program Site 09

Drilling Method: Mobile B-61 rig rollerbit, core bit

Boring No. MW09-23D

Sheet 4 of 4

Coordinates:
Surface Elevation:
Casing Above Surface:
Reference Elevation:
Reference Description:

Core Bit Size	HX				Drilling Start	Drilling Finish
Water Level					Time 1005	Time 1100
Time						
Date					Date 04/03/95	Date 04/03/95
Reference						

Surface Conditions:

Core Run RQ % No.	Rec % FT	Strati-graph	Bedding/ Fractures (dip angl)	Fillings	Ova (ppm)	Depth in Feet	Graphi Log	Lithologic Log	Drilling Log
						60			
						61			
						62			
						63			
						64			
						65			
						66			
						67			
80/ 3.9/ 4.9	98 4.9/ 5					68	0-28 in.	Light to medium gray quartzite with mica	0-1 ft/7 min.
								28-59 in.	1-2 ft/7 min.
						69			2-3 ft/7 min.
									3-4 ft/11 min.
						70	28 in.	Light gray, quartzite with mica. Minor	4-5 ft/12 min.
								healed fractures throughout. Natural	
						71		fractures at 2-4 in., 7.5 in., 8.5 in.,	Used approximately 800 gal of water
								11-13 in., 25-26 in., 34-37 in.	
						72			
						73		Bottom of boring at 73.3 ft BGS	
						74			
						75			
						76			
						77			
						78			
						79			

Logged by: Judi Shapiro Date: 17 March 1995

Drilling Contractor: A&W Environmental Drilling Driller: Phil Thornsbury

WELL SPECIFICATIONS:

Diam. of casing: _____ Screen Interval: _____ Sandpack: _____ Grout: _____

B.O.B. _____ Riser Interval: _____ Bentonite: _____ Cover: _____

EA Engineering, Science, and Technology, Inc.

LOG OF SOIL BORING

Coordinates: 196540.99N, 522125.43E
Surface Elevation: 8.5
Casing Above Surface 1.4
Reference Elevation: 9.75
Reference Description Top of well riser

Job. No.	Client	Location
29600.32	NORDIV, NAVFAC NCBC-Davisville	IR Program Site 09

Drilling Method: Mobile B-61 drill rig using 4.25 in. HSA

Boring No. MW09-24S

Sampling Method: 3 in. split spoonl driven 24 in. with a 140-lb hammer

Sheet 1 of 1

Water Level					Drilling Start	Drilling Finish
Time					0935	1100
Date						
Reference						

Surface Conditions: Level grassy

Sample Type	Inches Drvn/In Recvrd	Dpth. Csg.	Samp. # /samp. depth	PID (ppm)	Blows per 6 in.	Depth in Feet	USCS Log	
SS	24 / 22	0	1 / 0-2	7.8	9, 14, 31, 37	0, 1		0-12 in. Fill: dark grayish brown silty medium-coarse sand with little rounded gravel. 12-19 in. Banded brown, gray silty fine-coarse sand, little gravel. 19-22 in. Dark gray silty sand, organics, petro odor.
						2, 3, 4		
SS	24 / 21	5	2 / 5-7	1	7, 9, 14, 16	5, 6, 7, 8, 9		Dark gray fine to medium sand, trace organics, trace rounded white gravel, wet.
SS	24 / 24	10	3 / 10-12	1	9, 10, 10, 11	10, 11		0-20 in. Gray very fine sand, trace silt. 20-24 in. Olive gray very fine sand with trace silt.
						12		Bottom of boring at 12 ft BGS.
						13, 14, 15, 16, 17, 18, 19, 20		

Logged by: Denise Acampora Date: 7 March 1995

Drilling Contractor: A&W Environmental Drilling Driller: Phil Thornsbury

WELL SPECIFICATIONS:

Diam. of casing: 2 in. PVC Screen Interval: 5-10 ft BGS Sandpack 4.5-10.5 ft BGS Grout: 0-3.5 ft BGS

BOB: 12 ft Riser Interval: 1.5 AGS-5 ft BGS Bentonite 3.5-4.5 ft BGS Cover:

EA Engineering, Science, and Technology, Inc.

LOG OF SOIL BORING

Coordinates: 196540.99N, 522125.43E
Surface Elevation: 8.9
Casing Above Surface 1.9
Reference Elevation: 10.49
Reference Description Top of well riser

Job. No.	Client	Location
29600.32	NORDIV, NAVFAC NCBC-Davisville	IR Program Site 09

Drilling Method: Mobile B-61 drill rig using 8.25 in. HSA

Boring No. MW09-24D

Sampling Method: 2-in. split-spoon driven with 140-lb hammer

Sheet 1 of 4

Water Level					Drilling Start	Drilling Finish
Time					1330	1420
Date						
Reference						

Surface Conditions:

Sample Type	Inches Drvn/In Recvrd	Dpth. Csg.	Samp. # /samp. depth	PID (ppm)	Blows per 6 in.	Depth in Feet	USCS Log	
						10		
						11		
SS	24 / 24		S-1 12-14	0.6	2 / 4	12		Dark gray very fine sand with trace silt, wet.
					6 / 7	13		
SS	24 / 19		S-2 14-16	0.6	1 / 4	14		0-14 in. - Same as above. 14-19 in. - Dark gray silt with trace very fine sand, wet.
					8 / 9	15		
SS	24 / 12		S-3 16-18	0.8	5 / 9	16		Same as 14-19 in. above
					11 / 11	17		
SS	24 / 14		S-4 18-20	6.2	3 / 7	18		Same as above, but with olive gray very fine sand lens at 10 in.
					6 / 6	19		
						20		
						21		
						22		
						23		
						24		
						25		
						26		
						27		
						28		
						29		
						30		

Logged by: D. Street Date: 9 March 1995

Drilling Contractor: A&W Environmental Drilling Driller: Don Sylvia

WELL SPECIFICATIONS:

Diam. of casing: 2 in. PVC Screen Interval: 19-24 ft BGS Sandpack 18.5-24.5 ft BGS Grout: 0-16.5 ft BGS

BOB: 38 ft BGS Riser Interval: 1.6ft AGS-19 ft BGS Bentonite 16.5-18.5 ft BGS Cover:

EA Engineering, Science, and Technology, Inc.

LOG OF SOIL BORING

Coordinates:
Surface Elevation:
Casing Above Surface:
Reference Elevation:
Reference Description:

Job. No.	Client	Location
29600.32	NORDIV, NAVFAC NCBC-Davisville	IR Program Site 09

Drilling Method: Mobile B-61 drill rig with rollerbit.

Boring No. MW09-24D

Sampling Method: 3 in. ID, 5-ft split-spoon driven with 300-lb hammer

Sheet 2 of 4

Water Level					Drilling Start	Drilling Finish
Time						
Date						
Reference						

Surface Conditions:

Sample Type	Inches Drvn/In Recvrd	Dpth. Csg.	Samp. # /samp. depth	PID (ppm)	Blows per 6 in.	Depth in Feet	USCS Log	Description
						10		
						11		
						12		
						13		
						14		
						15		
						16		
						17		
						18		
SS	60 33	18	S-1 19-24	2.4	3 4	19		Dark gray, very fine sandy, clayey, silt with clay content decreasing towards bottom, lens of fine sand, some color variation, bands of olive gray.
					4 5	20		
					5 5	21		
					6 6	22		
					6 7	23		
SS	60 31	18	S-2 24-29	2.4	2 5	24		0-11 in. Dark gray very fine sandy clayey silt, wet. 11-13 in. Dark gray fine to coarse sand, trace fine gravel, wet.
					6 7	25		13-15 in. Dark gray clayey silt with fine-medium sand. 15-31 in. Dark gray clayey silt with angular to subangular gravel.
					6 18	26		
					34 16	27		
					26 28	28		
SS					49 37	29		
						30		

Logged by: Judi Shapiro

Date: 4 April 1995

Drilling Contractor: A&W Environmental Drilling

Driller: Phil Thornsbury

WELL SPECIFICATIONS:

Diam. of casing:
BOB:
Screen Interval:
Riser Interval:
Sandpack:
Bentonite:
Grout:
Cover:

EA Engineering, Science, and Technology, Inc.

LOG OF SOIL BORING

Coordinates:
Surface Elevation:
Casing Above Surface:
Reference Elevation:
Reference Description:

Job. No.	Client	Location
29600.32	NORDIV, NAVFAC NCBC-Davisville	IR Program Site 09

Drilling Method: Mobile B-61 drill rig with rollerbit.

Boring No. MW09-24D

Sampling Method: 3-in. ID, 5-ft long SS with 300-lb hammer

Sheet 3 of 4

Water Level					Drilling Start	Drilling Finish
Time						
Date						
Reference						

Sample Type	Inches Drvn/In Recvrd	Dpth. Csg.	Samp. # /samp. depth	PID (ppm)	Blows per 6 in.	Depth in Feet	USCS Log	Surface Conditions:
SS	50	18P	S-3	24	31	30		0-7 in. Dark gray fine-coarse sand and angular gravel up to 1 in., wet.
	24		29-33		23			7-24 in. Dark gray clayey silt and fine sand with gravel up to 2 in., wet.
		29T			21	31		
					21			Permanent casing set at 18 ft.
					21	32		Temporary casing set at 29 ft (5" diameter).
					16			
					50/2	33		
						34		
						35		
						36		
						37		
						38		
						39		
						40		
						41		
						42		
						43		
						44		
						45		
						46		
						47		
						48		
						49		
						50		

Logged by: Judi Shapiro

Date: 4 April 1995

Drilling Contractor: A&W Environmental Drilling

Driller: Phil Thornsbury

WELL SPECIFICATIONS:

Diam. of casing:
BOB:
Screen Interval:
Riser Interval:
Sandpack:
Bentonite:
Grout:
Cover:

EA Engineering, Science, and T chnology, Inc.

LOG OF CORE BORING

Job. No.	Client	Location
29600.32	NORDIV, NAVFAC NCBC-Davisville	IR Program Site 09

Drilling Method: Mobile B-61 rig rollerbit and diamond core barrel

Boring No. MW09-24D

Sheet 4 of 4

Coordinates:
Surface Elevation:
Casing Above Surface:
Reference Elevation:
Reference Description:

Core Bit Size: HX

					Drilling Start	Drilling Finish
Water Level					Time	Time
Time						
Date					Date	Date
Reference						

Surface Conditions:

Core Run RQ % No.	Rec % FT	Strati-graph	Bedding/ Fractures (dip angl)	Fillings	Ova (ppm)	Depth in Feet	Graphic Log	Lithologic Log	Drilling Log
						30			
						31			
						32			
Run 1									
86	90/ 4.5/ 5.0					33		0-3.15 ft Gray medium grain metals, quartz, mica, healed high fracture with approximately 0.4 ft massive 3.15-4 ft dark gray massive, fine-grained phyllite fabric. Small white elongate flecks, randomnly oriented foliation to fabric 4-4.5 same as 0-3.15	0-3.15 ft gray quartzite, massive, with mica. Healed high angle fracture at approximately 0.4 ft 3.15-4.0 ft dark gray phyllite, massive, with small elongate white, (minerals) and randomnly oriented foliation. 4.0-4.5 ft same as 0-3.15 ft above.
						34			
						35			
						36			
						37			
						38		Bottom of boring at 38 ft BGS	
						39			
						40			
						41			
						42			
						43			
						44			
						45			
						46			
						47			
						48			
						49			

Logged by: J. Shapiro/D. Street

Date: 5 April 1995

Drilling Contractor: A&W Environmental Drilling

Driller: P. Thornsbury

WELL SPECIFICATIONS:

Diam. of casing:
B.O.B.
Screen Interval:
Riser Interval:
Sandpack:
Bentonite:
Grout:
Cover:

APPENDIX C

PHASE III RI WELL DIAGRAMS

MONITORING WELL CONSTRUCTION

CLIENT/SITE NAME: NCBC Davisville / IR Program Site 09 / Allen Harbor Landfill	
DATE INSTALLED: 2/1/95	PROJECT No. 29600.32.3291
ELEVATION OF GROUND SURFACE: 19.5	COORDINATES: N: 196801.1 E: 522584.6
ELEVATION TOP OF WELL RISER: 21.72	EA INSPECTOR: T. Porter
DEPTH TO WATER: DATE/TIME	WELL No. MW09-071
DRILLING METHOD/DEPTH: 4 1/4 in. Hollow-Stem Auger 0-35'	

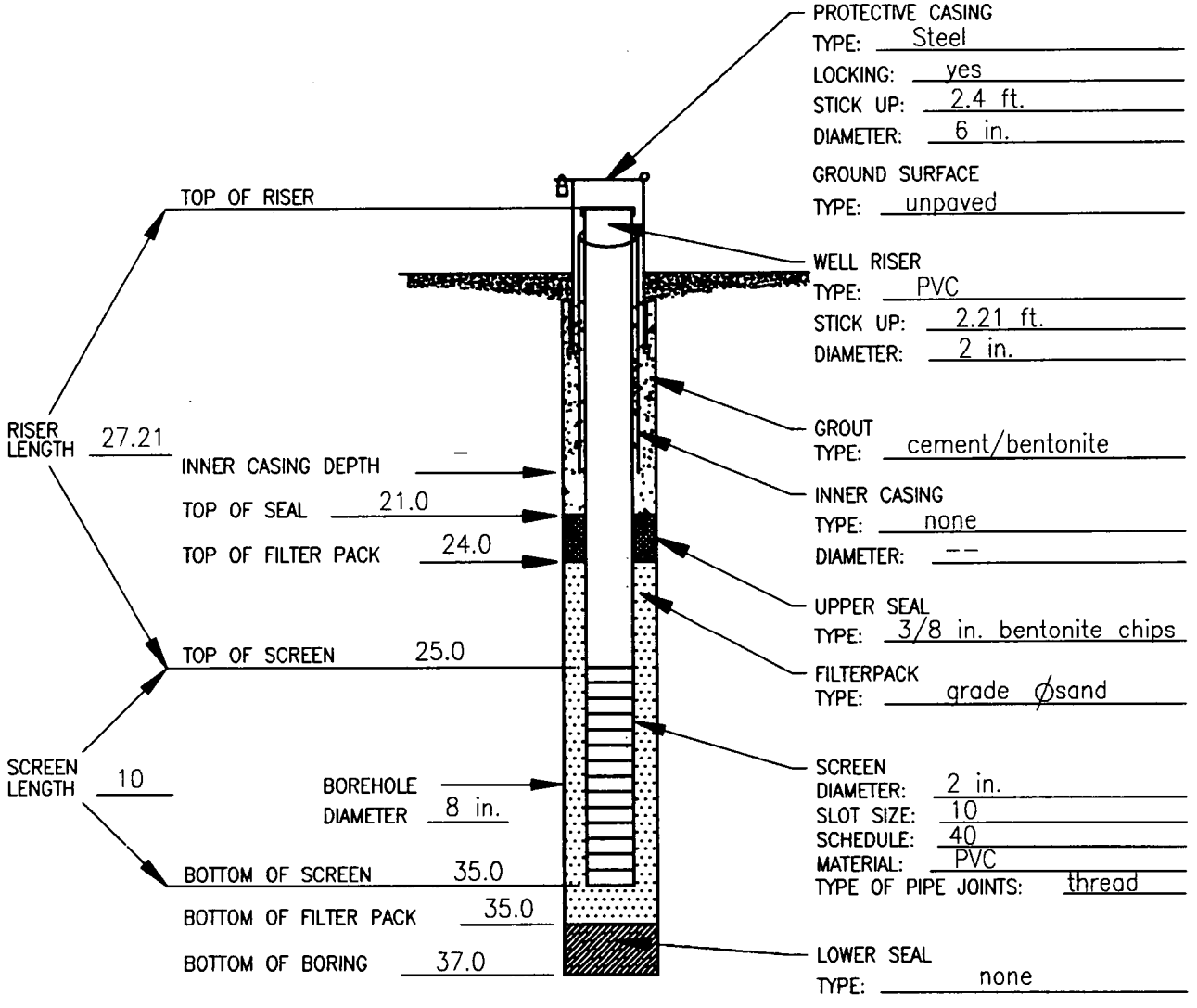

MONITORING WELL CONSTRUCTION
(ALL DEPTH MEASURMENTS IN FT. BELOW GROUND SURFACE)

EA ENGINEERING, SCIENCE, AND TECHNOLOGY

DWG. FILE No. F:\29600.32\3291\DWG\MW-071

MONITORING WELL CONSTRUCTION

CLIENT/SITE NAME: NCBC Davisville / IR Program Site 09 / Allen Harbor Landfill	
DATE INSTALLED: 3/29/95	PROJECT No. 29600.32.3291
ELEVATION OF GROUND SURFACE: 19.4	COORDINATES: N: 196789.0 E: 522596.1
ELEVATION TOP OF WELL RISER: 21.59	EA INSPECTOR: J. Shapiro
DEPTH TO WATER: DATE/TIME	WELL No. MW09-07R
DRILLING METHOD/DEPTH: 8 1/4 in. Hollow-Stem Auger 0-35', 3 7/8 in. Roller Bit 35-72', HX Core 72-86'	

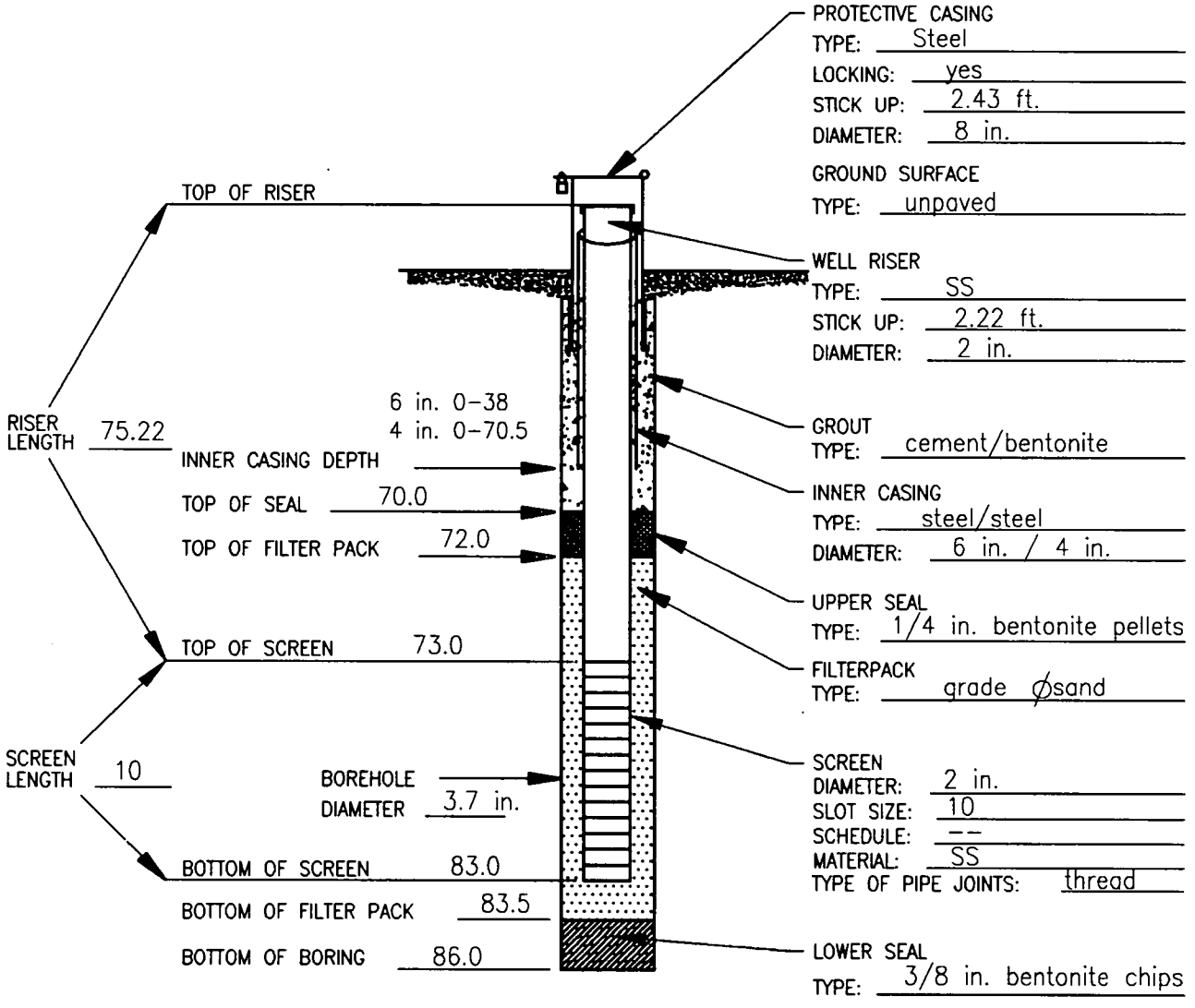

MONITORING WELL CONSTRUCTION
(ALL DEPTH MEASURMENTS IN FT. BELOW GROUND SURFACE)

EA ENGINEERING, SCIENCE, AND TECHNOLOGY

DWG. FILE No. F:\2960032\3291\DWG\MW-07R

MONITORING WELL CONSTRUCTION

CLIENT/SITE NAME: NCBC Davisville / IR Program Site 09 / Allen Harbor Landfill	
DATE INSTALLED: 2/14/95	PROJECT No. 29600.32.3291
ELEVATION OF GROUND SURFACE: 19.4	COORDINATES: N: 196752.5 E: 522592.2
ELEVATION TOP OF WELL RISER: 21.09	EA INSPECTOR: K. Caldwell
DEPTH TO WATER: DATE/TIME	WELL No. MW09-14D
DRILLING METHOD/DEPTH: 8 1/4 in. Hollow-Stem Auger 0-40', 3 7/8 in. Rollerbit w/4 in. Flush-joint casing 40-75', HX core 75-80'	

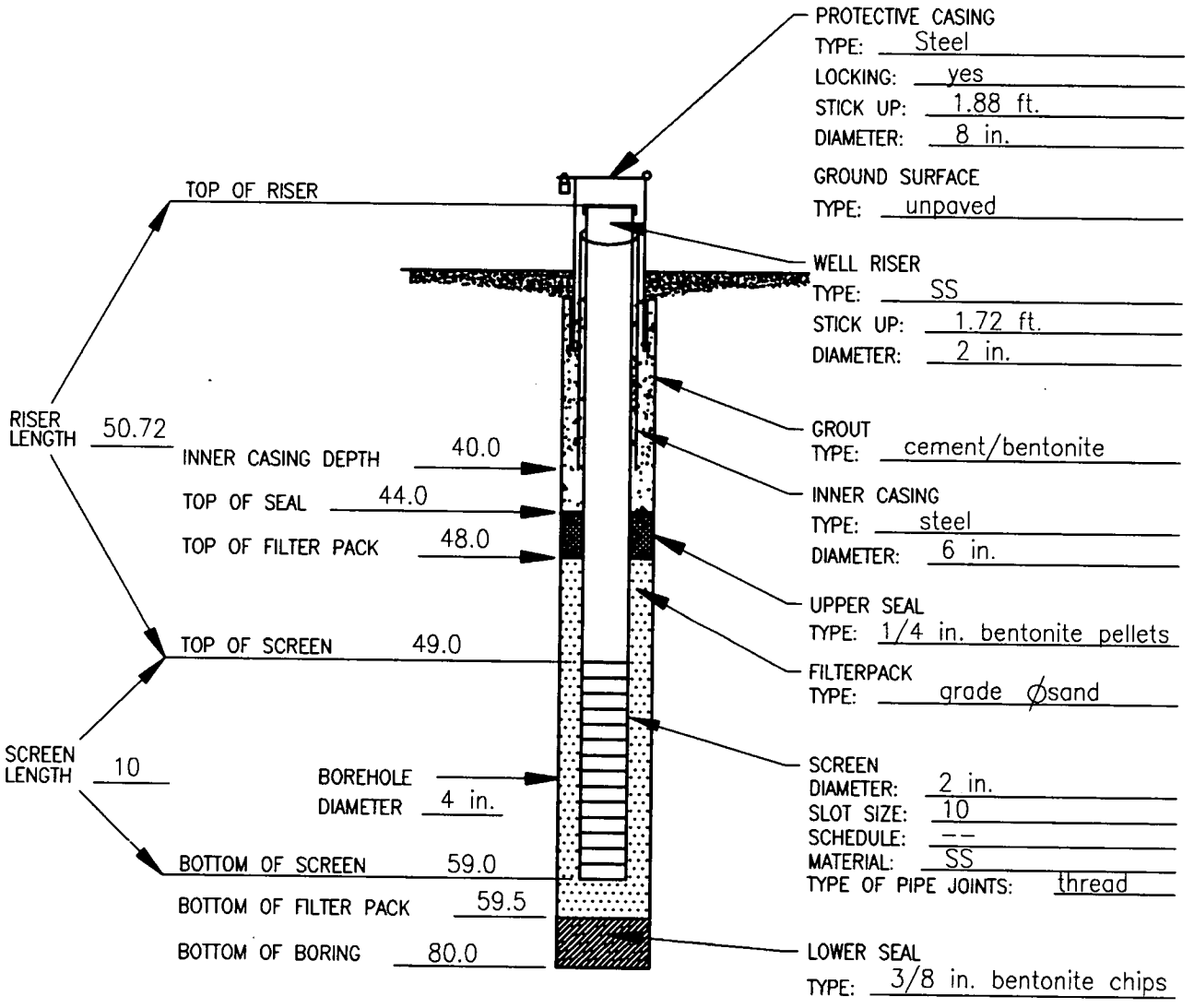

MONITORING WELL CONSTRUCTION
(ALL DEPTH MEASURMENTS IN FT. BELOW GROUND SURFACE)

EA ENGINEERING, SCIENCE, AND TECHNOLOGY

DWG. FILE No. F:\29600327\3291\DWG\MW-14D

MONITORING WELL CONSTRUCTION

CLIENT/SITE NAME: NCBC Davisville / IR Program Site 09 / Allen Harbor Landfill	
DATE INSTALLED: 2/2/95	PROJECT No. 29600.32.3291
ELEVATION OF GROUND SURFACE: 19.3	COORDINATES: N: 196757.4 E: 522590.5
ELEVATION TOP OF WELL RISER: 20.80	EA INSPECTOR: T. Porter
DEPTH TO WATER: DATE/TIME	WELL No. MW09-14I
DRILLING METHOD/DEPTH: 4 1/4 in. Hollow-Stem Auger 0-37'	

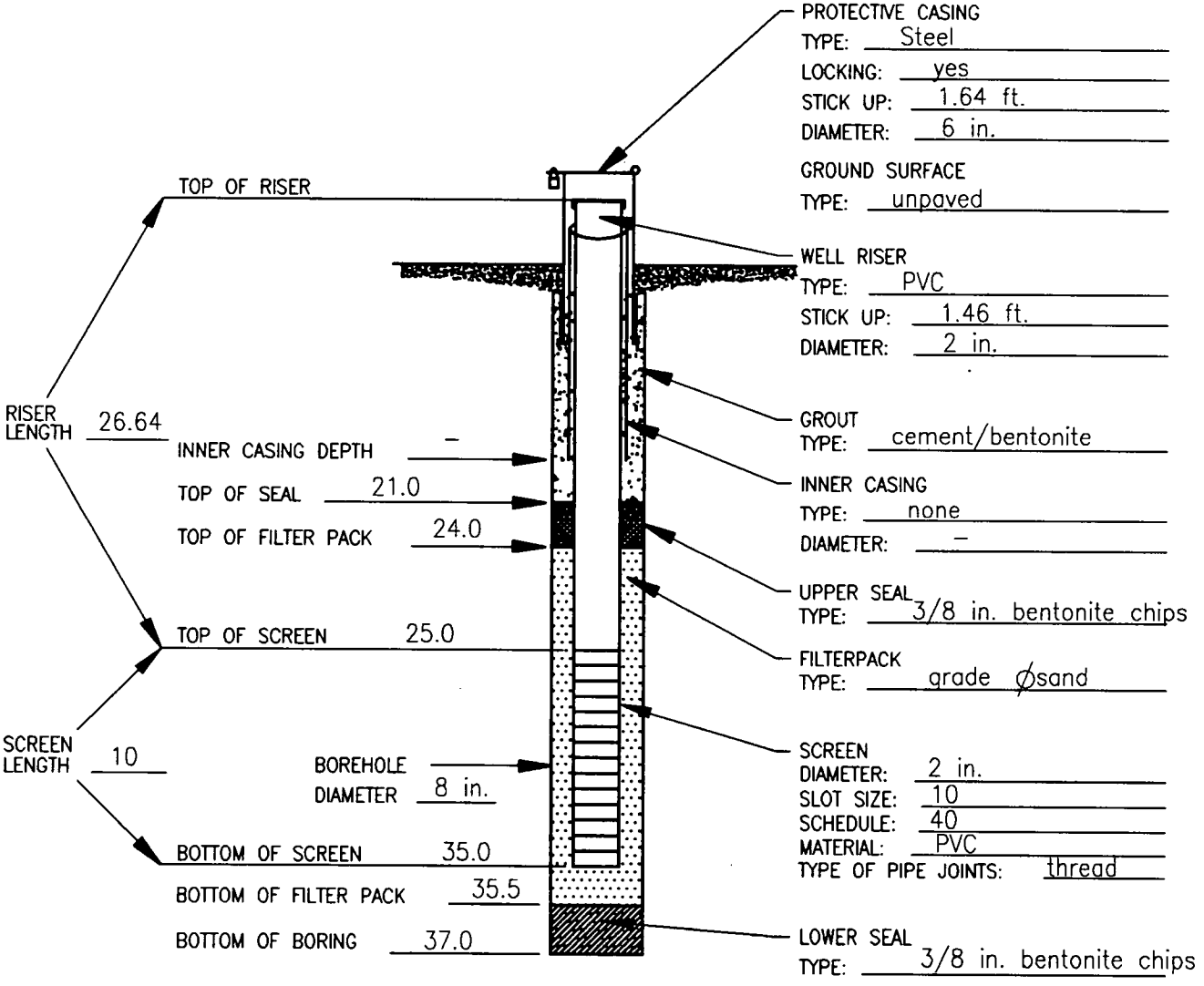

MONITORING WELL CONSTRUCTION
(ALL DEPTH MEASURMENTS IN FT. BELOW GROUND SURFACE)

EA ENGINEERING, SCIENCE, AND TECHNOLOGY

DWG. FILE No. F:\29600032\3291\DWG\MW-14I

MONITORING WELL CONSTRUCTION

CLIENT/SITE NAME: NCBC Davisville / IR Program Site 09 / Allen Harbor Landfill	
DATE INSTALLED: 2/28/95	PROJECT No. 29600.32.3291
ELEVATION OF GROUND SURFACE: 19.5	COORDINATES: N: 196720.2 E: 522523.4
ELEVATION TOP OF WELL RISER: 21.72	EA INSPECTOR: D. Street
DEPTH TO WATER: DATE/TIME	WELL No. MW09-15I
DRILLING METHOD/DEPTH: 4 1/4 in. Hollow-Stem Auger 0-30.5'	

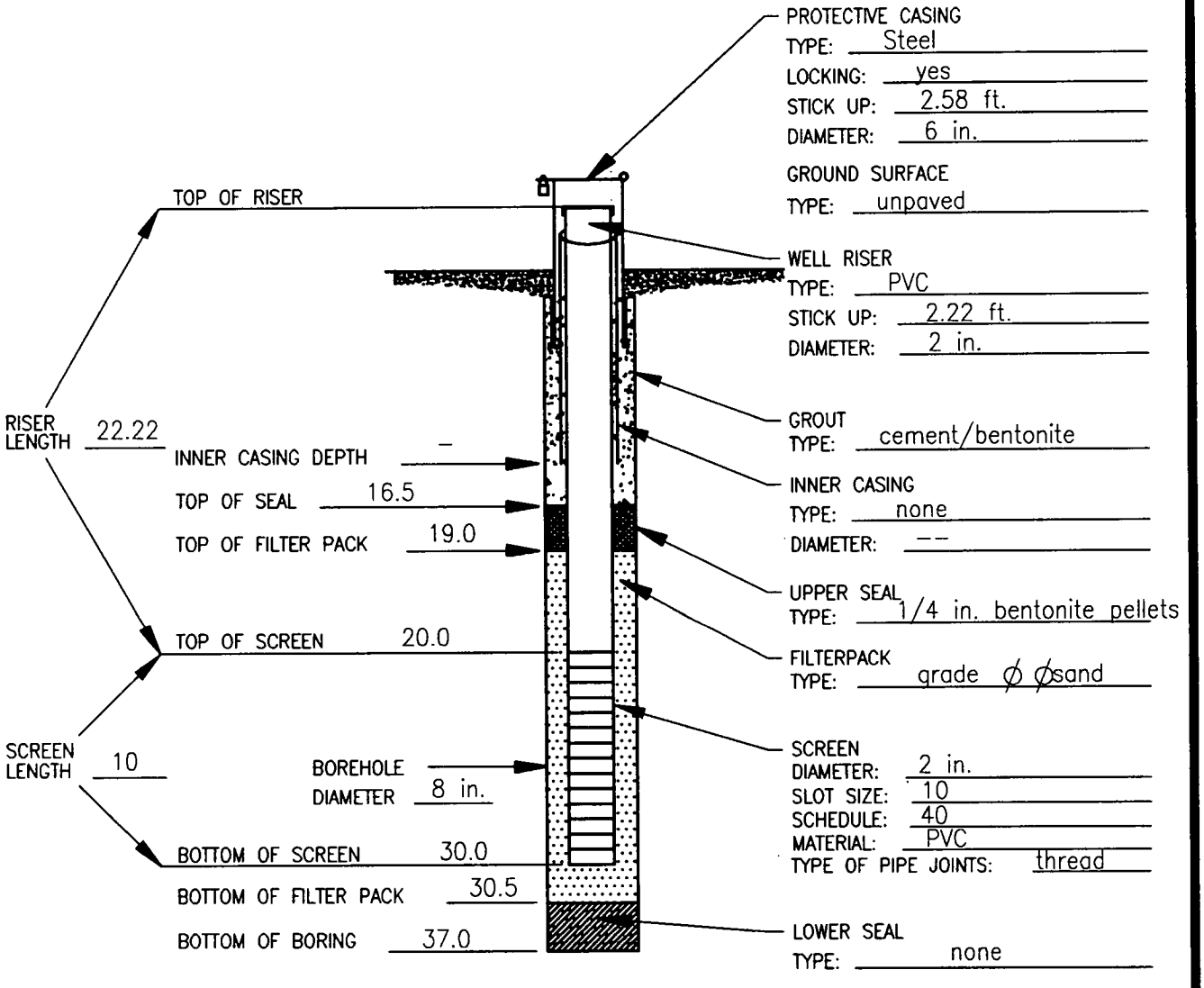

MONITORING WELL CONSTRUCTION
(ALL DEPTH MEASURMENTS IN FT. BELOW GROUND SURFACE)

EA ENGINEERING, SCIENCE, AND TECHNOLOGY

DWG. FILE No. F:\29600032\3291\DWG\MW-15I

MONITORING WELL CONSTRUCTION

CLIENT/SITE NAME: NCBC Davisville / IR Program Site 09 / Allen Harbor Landfill	
DATE INSTALLED: 3/1/95	PROJECT No. 29600.32.3291
ELEVATION OF GROUND SURFACE: 19.9	COORDINATES: N: 196877.6 E: 522645.2
ELEVATION TOP OF WELL RISER: 22.31	EA INSPECTOR: D. Acampora
DEPTH TO WATER: DATE/TIME	WELL No. MW09-16S
DRILLING METHOD/DEPTH: 4 1/4 in. Hollow-Stem Auger 0-29'	

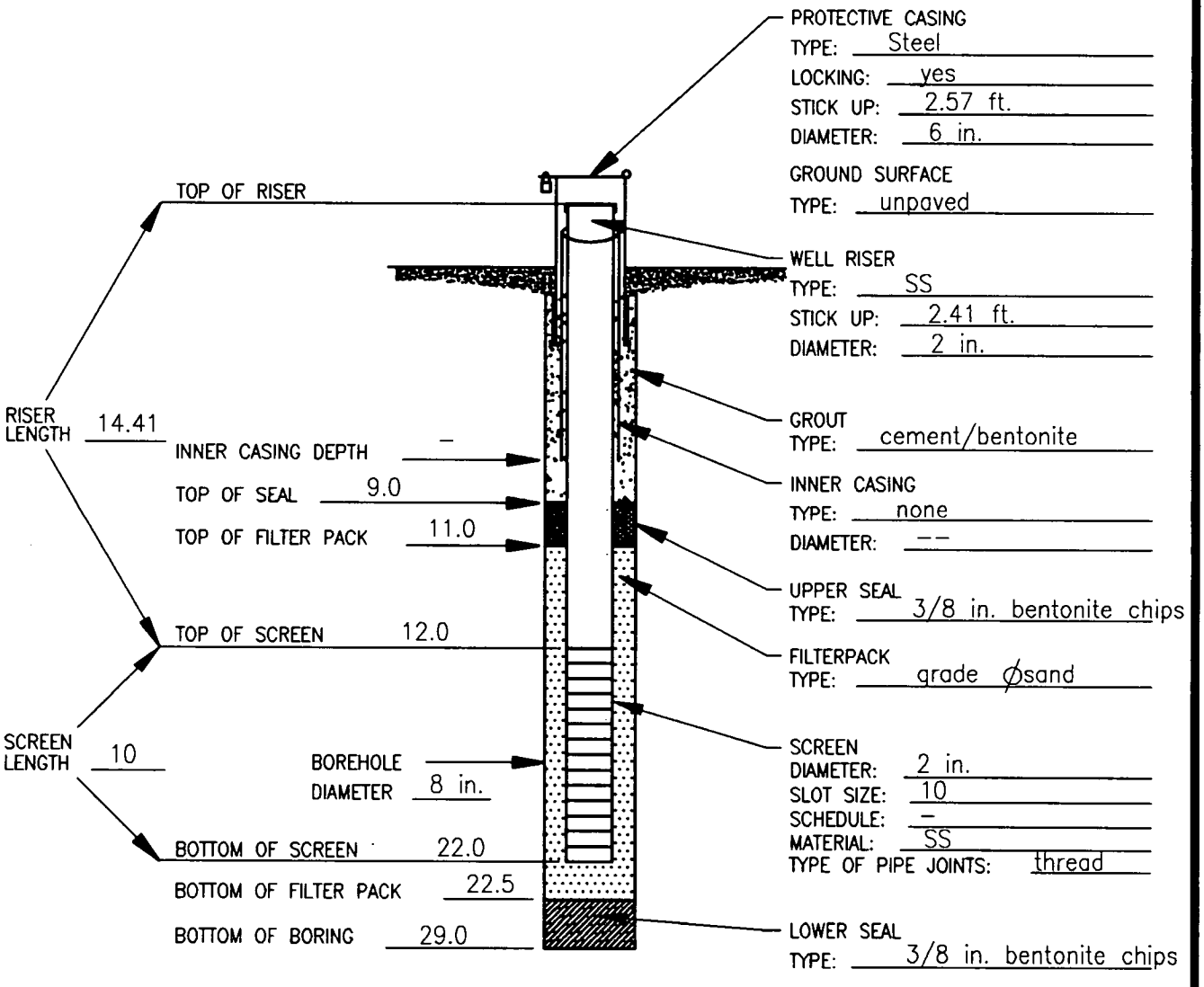

MONITORING WELL CONSTRUCTION
(ALL DEPTH MEASURMENTS IN FT. BELOW GROUND SURFACE)

EA ENGINEERING, SCIENCE, AND TECHNOLOGY

DWG. FILE No. F:\29600.32\3291\DWG\MW-16S

MONITORING WELL CONSTRUCTION

CLIENT/SITE NAME: NCBC Davisville / IR Program Site 09 / Allen Harbor Landfill	
DATE INSTALLED: 3/30/95	PROJECT No. 29600.32.3291
ELEVATION OF GROUND SURFACE: 19.3	COORDINATES: N: 196701.4 E: 522702.4
ELEVATION TOP OF WELL RISER: 20.74	EA INSPECTOR: D. Acampora
DEPTH TO WATER: DATE/TIME	WELL No. MW09-17D
DRILLING METHOD/DEPTH: 8 1/4 in. Hollow-Stem Auger 0-26', 4 7/8 in. Rollerbit w/5 in. Flush-joint casing 26-74', HX Core 74-79'	

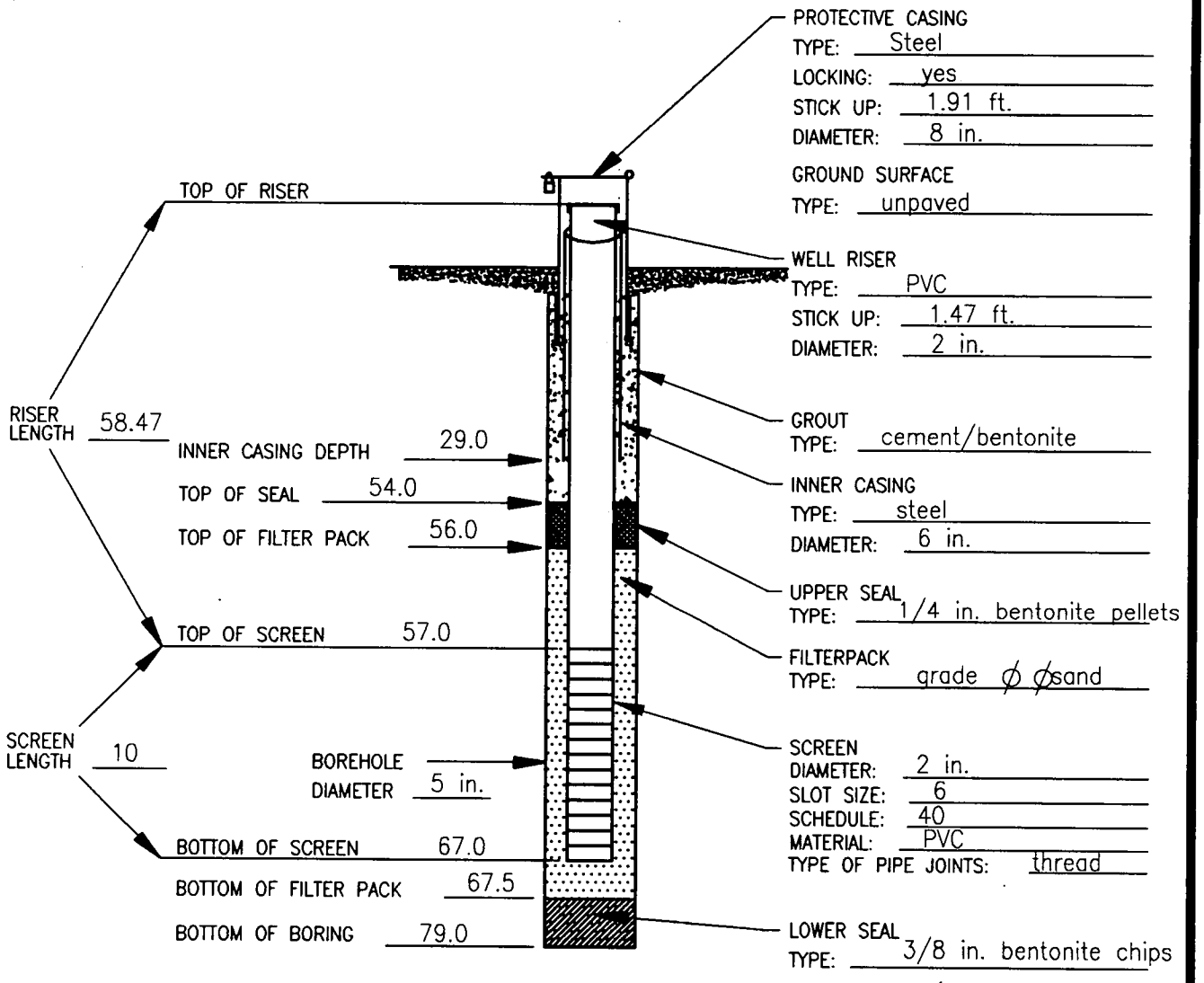

MONITORING WELL CONSTRUCTION
(ALL DEPTH MEASURMENTS IN FT. BELOW GROUND SURFACE)

EA ENGINEERING, SCIENCE, AND TECHNOLOGY

DWG. FILE No. F:\2980032\3291\DWG\MW-17D

MONITORING WELL CONSTRUCTION

CLIENT/SITE NAME: NCBC Davisville / IR Program Site 09 / Allen Harbor Landfill	
DATE INSTALLED: 3/2/95	PROJECT No. 29600.32.3291
ELEVATION OF GROUND SURFACE: 19.1	COORDINATES: N: 196705.2 E: 522698.4
ELEVATION TOP OF WELL RISER: 21.20	EA INSPECTOR: D. Street
DEPTH TO WATER: DATE/TIME	WELL No. MW09-171
DRILLING METHOD/DEPTH: 4 1/4 in. Hollow-Stem Auger 0-29'	

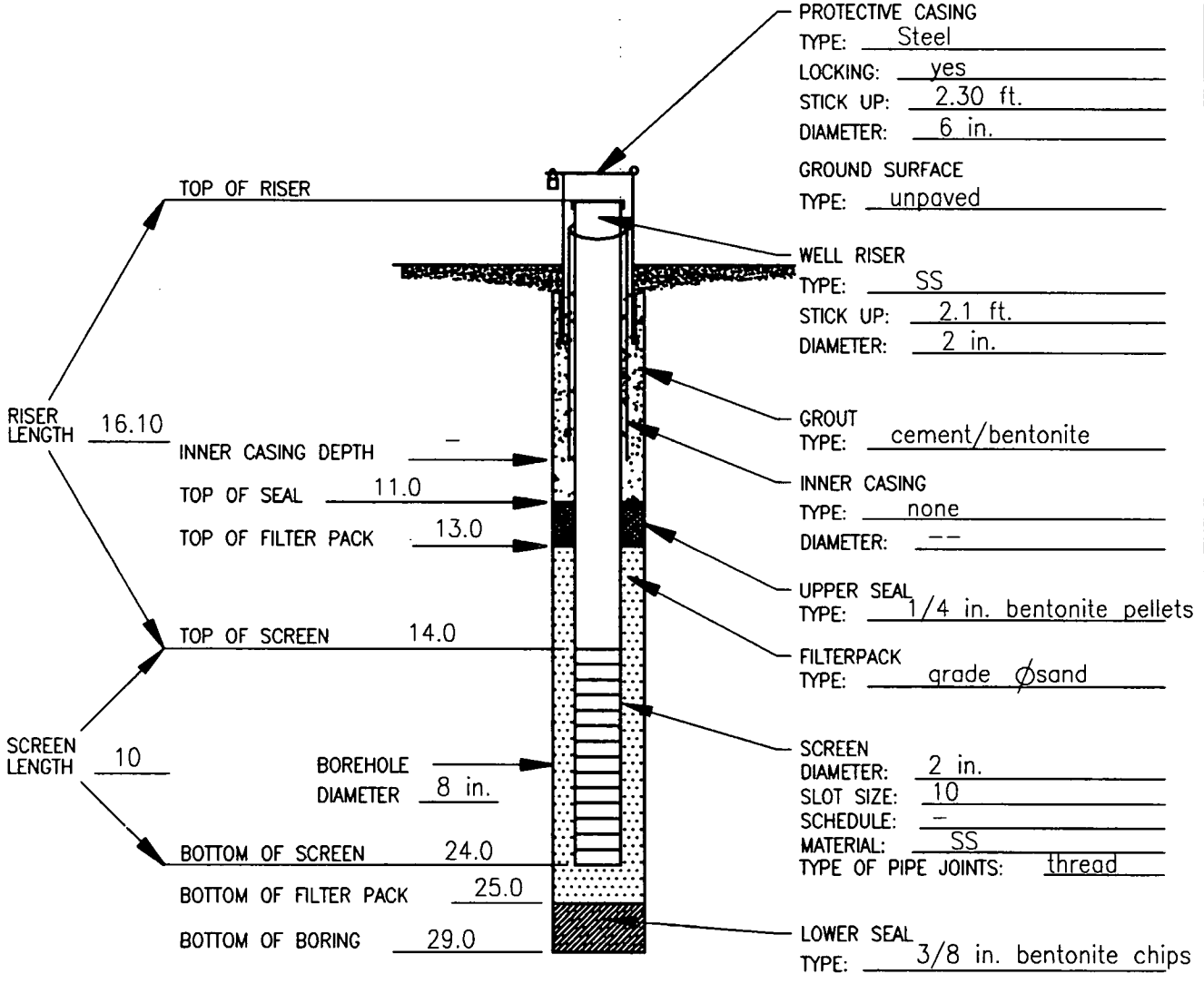

MONITORING WELL CONSTRUCTION
(ALL DEPTH MEASURMENTS IN FT. BELOW GROUND SURFACE)

EA ENGINEERING, SCIENCE, AND TECHNOLOGY

DWG. FILE No. F:\29600032\3291\DWG\MW-171

MONITORING WELL CONSTRUCTION

CLIENT/SITE NAME: NCBC Davisville / IR Program Site 09 / Allen Harbor Landfill	
DATE INSTALLED: 3/2/95	PROJECT No. 29600.32.3291
ELEVATION OF GROUND SURFACE: 19.1	COORDINATES: N: 196869.4 E: 522471.7
ELEVATION TOP OF WELL RISER: 20.43	EA INSPECTOR: D. Acampora
DEPTH TO WATER: DATE/TIME	WELL No. MW09-18I
DRILLING METHOD/DEPTH: 4 1/4 in. Hollow-Stem Auger 0-33'	

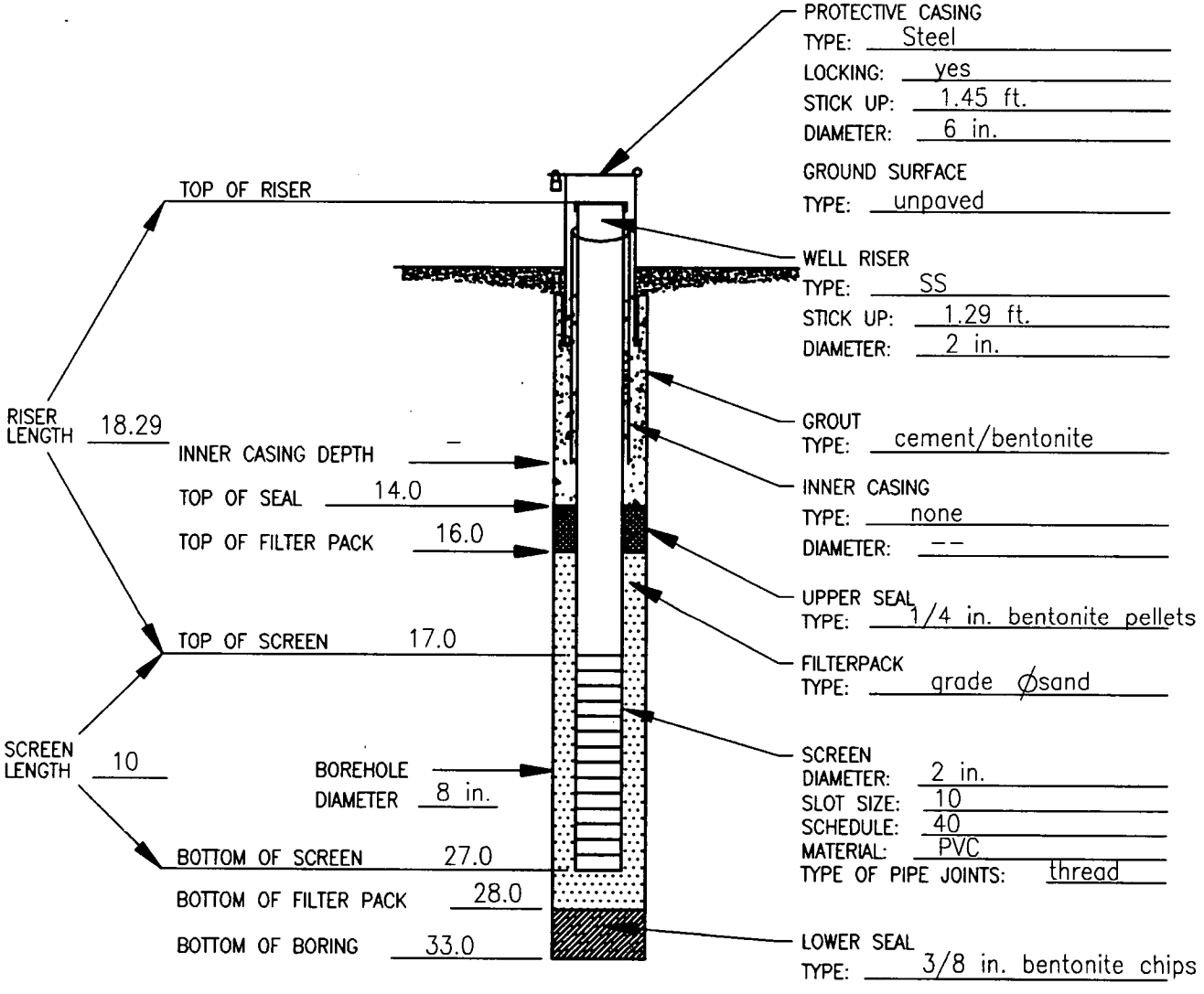

MONITORING WELL CONSTRUCTION
(ALL DEPTH MEASURMENTS IN FT. BELOW GROUND SURFACE)

EA ENGINEERING, SCIENCE, AND TECHNOLOGY

DWG. FILE No. F:\29600.32\3291\DWG\MW-18I

MONITORING WELL CONSTRUCTION

CLIENT/SITE NAME: NCBC Davisville / IR Program Site 09 / Allen Harbor Landfill	
DATE INSTALLED: 3/3/95	PROJECT No. 29600.32.3291
ELEVATION OF GROUND SURFACE: 18.0	COORDINATES: N: 196508.4 E: 522572.4
ELEVATION TOP OF WELL RISER: 19.49	EA INSPECTOR: J. Shapiro
DEPTH TO WATER: DATE/TIME	WELL No. MW09-19I
DRILLING METHOD/DEPTH: 4 1/4 in. Hollow-Stem Auger 0-31'	

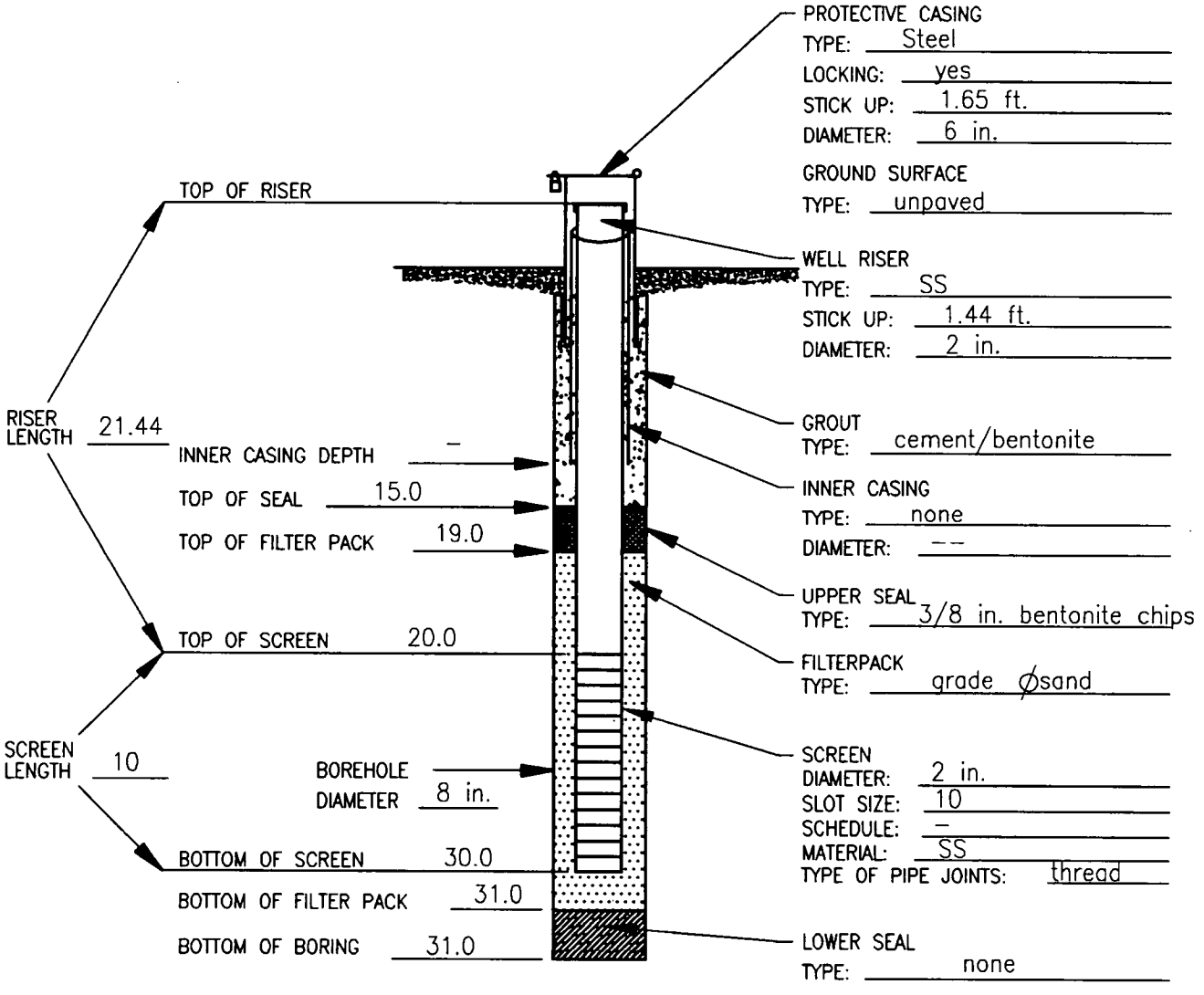

MONITORING WELL CONSTRUCTION
(ALL DEPTH MEASURMENTS IN FT. BELOW GROUND SURFACE)

EA ENGINEERING, SCIENCE, AND TECHNOLOGY

DWG. FILE No. F:\29600.32\3291\DWG\MW-19I

MONITORING WELL CONSTRUCTION

CLIENT/SITE NAME: NCBC Davisville / IR Program Site 09 / Allen Harbor Landfill	
DATE INSTALLED: 3/20/95	PROJECT No. 29600.32.3291
ELEVATION OF GROUND SURFACE: 17.3	COORDINATES: N: 196386.7 E: 522674.8
ELEVATION TOP OF WELL RISER: 19.15	EA INSPECTOR: D. Acampora
DEPTH TO WATER: DATE/TIME	WELL No. MW09-20D
DRILLING METHOD/DEPTH: 8 1/4 in. Hollow-Stem Auger 0-33', 5 in. Flush-joint casing 33-68', HX core 68-73'	

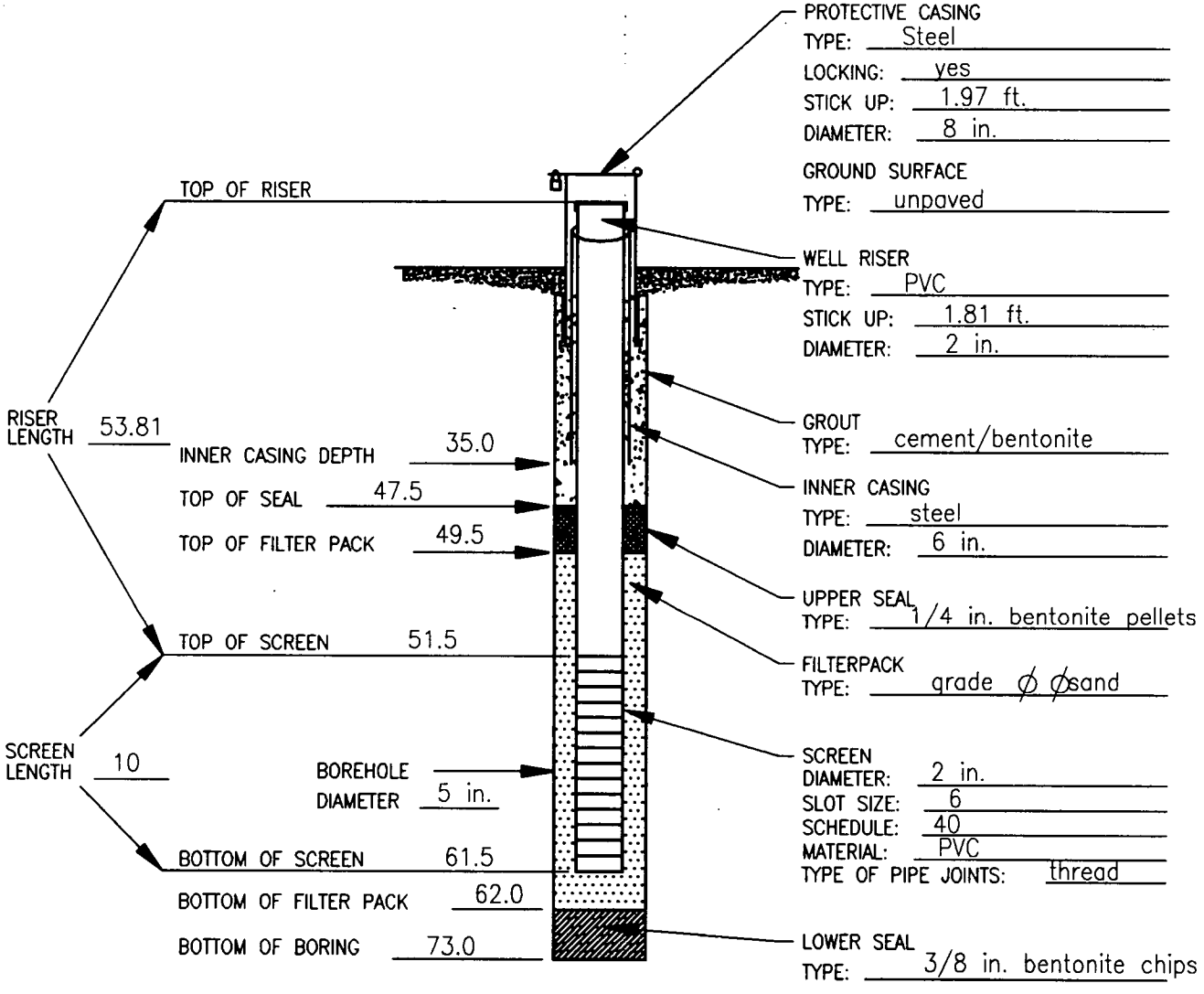

MONITORING WELL CONSTRUCTION
(ALL DEPTH MEASURMENTS IN FT. BELOW GROUND SURFACE)

EA ENGINEERING, SCIENCE, AND TECHNOLOGY

DWG. FILE No. F:\29600.32\3291\DWG\MW-20D

MONITORING WELL CONSTRUCTION

CLIENT/SITE NAME: NCBC Davisville / IR Program Site 09 / Allen Harbor Landfill	
DATE INSTALLED: 3/3/95	PROJECT No. 29600.32.3291
ELEVATION OF GROUND SURFACE: 17.3	COORDINATES: N: 196402.0 E: 522675.5
ELEVATION TOP OF WELL RISER: 18.69	EA INSPECTOR: D. Acampora
DEPTH TO WATER: DATE/TIME	WELL No. MW09-20I
DRILLING METHOD/DEPTH: 4 1/4 in. Hollow-Stem Auger 0-36'	

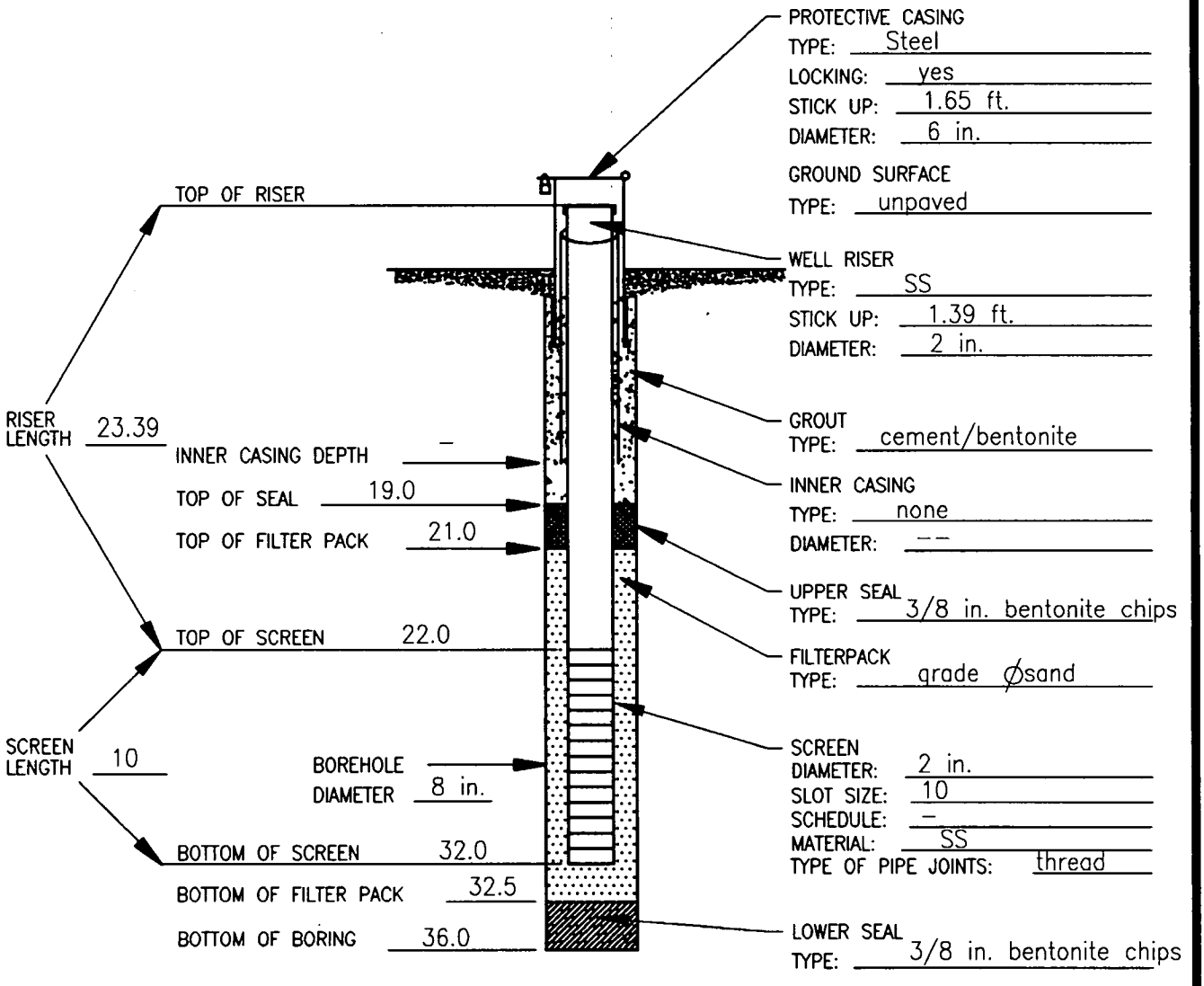

MONITORING WELL CONSTRUCTION
(ALL DEPTH MEASURMENTS IN FT. BELOW GROUND SURFACE)

EA ENGINEERING, SCIENCE, AND TECHNOLOGY

DWG. FILE No. F:\2960032\3291\DWG\MW-20I

MONITORING WELL CONSTRUCTION

CLIENT/SITE NAME: NCBC Davisville / IR Program Site 09 / Allen Harbor Landfill	
DATE INSTALLED: 3/17/95	PROJECT No. 29600.32.3291
ELEVATION OF GROUND SURFACE: 17.3	COORDINATES: N: 196391.3 E: 522670.8
ELEVATION TOP OF WELL RISER: 19.06	EA INSPECTOR: D. Acampora
DEPTH TO WATER: DATE/TIME	WELL No. MW09-20R
DRILLING METHOD/DEPTH: 8 1/4 in. Hollow-Stem Auger 0-35', 5 7/8 in. Rollerbit 35-66', 5 in. Flush-joint 66-70', HX core 70-84.5'	

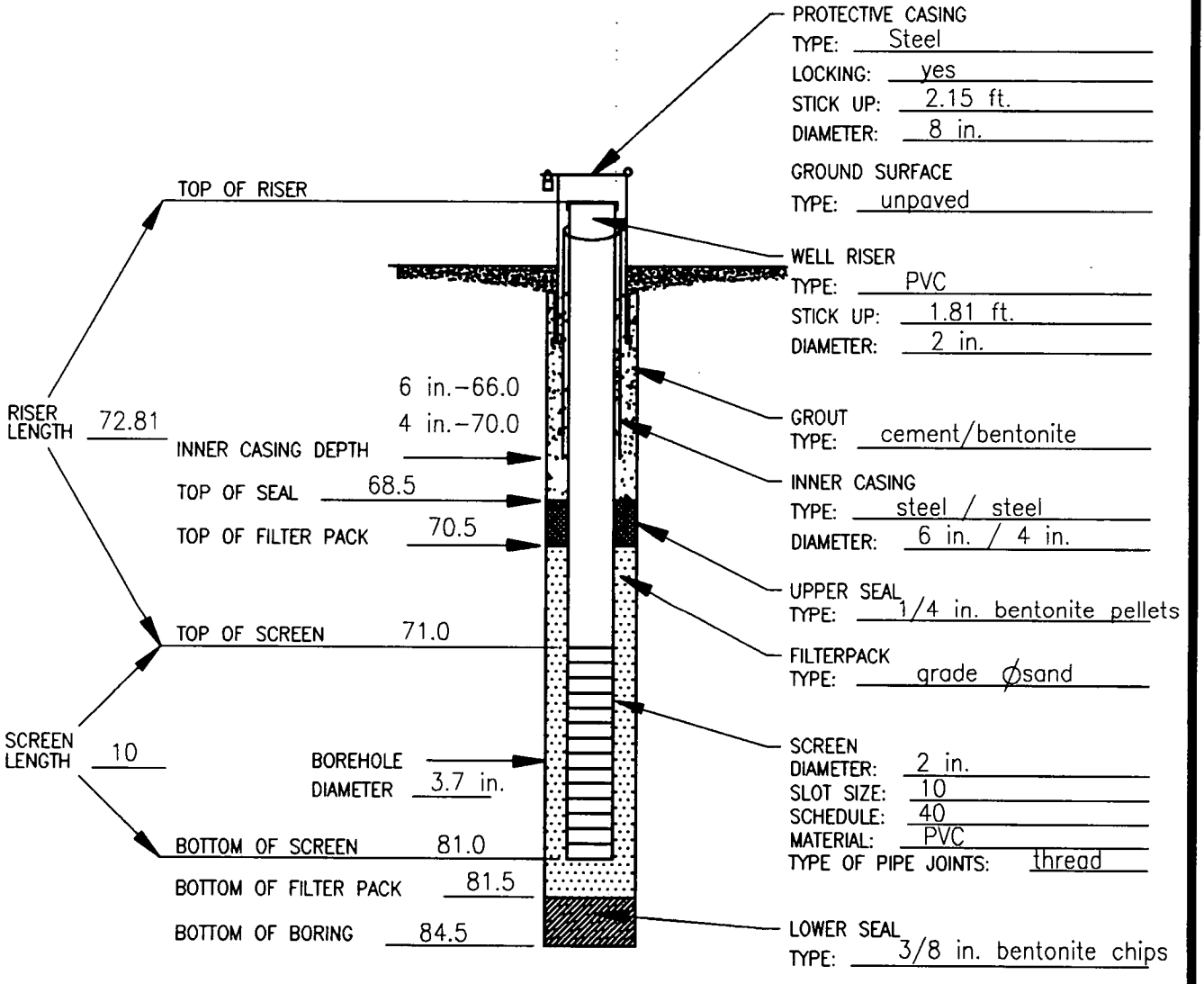

MONITORING WELL CONSTRUCTION
(ALL DEPTH MEASURMENTS IN FT. BELOW GROUND SURFACE)

EA ENGINEERING, SCIENCE, AND TECHNOLOGY

DWG. FILE No. F:\2980032\3291\DWG\MW-20R

MONITORING WELL CONSTRUCTION

CLIENT/SITE NAME: NCBC Davisville / IR Program Site 09 / Allen Harbor Landfill	
DATE INSTALLED: 3/2/95	PROJECT No. 29600.32.3291
ELEVATION OF GROUND SURFACE: 17.4	COORDINATES: N: 196411.8 E: 522683.1
ELEVATION TOP OF WELL RISER: 18.63	EA INSPECTOR: D. Acampora
DEPTH TO WATER: DATE/TIME	WELL No. MW09-20S
DRILLING METHOD/DEPTH: 4 1/4 in. Hollow-Stem Auger 0-24'	

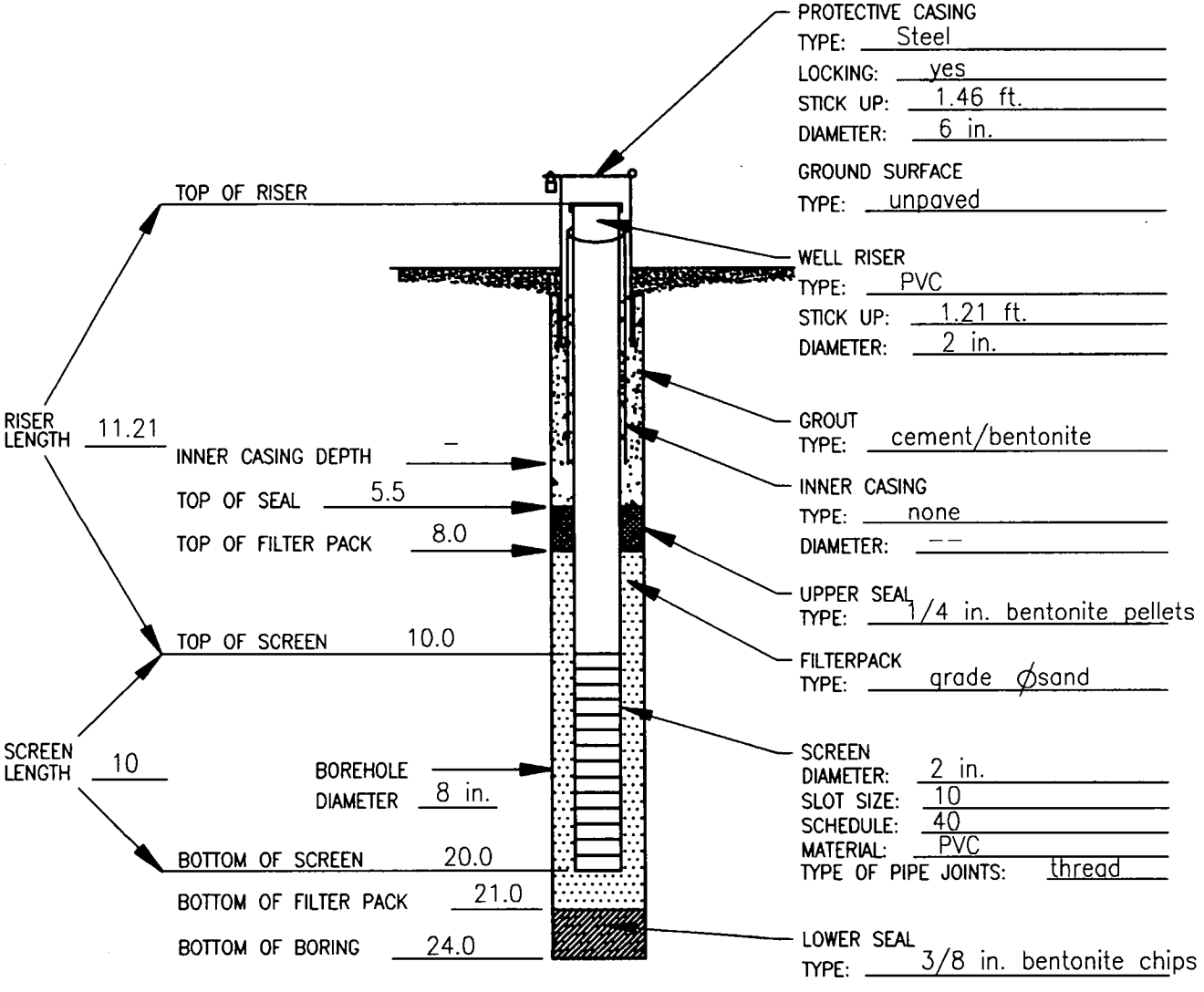

MONITORING WELL CONSTRUCTION
(ALL DEPTH MEASURMENTS IN FT. BELOW GROUND SURFACE)

EA ENGINEERING, SCIENCE, AND TECHNOLOGY

DWG. FILE No. F:\29600.32\3291\DWG\MW-20S

MONITORING WELL CONSTRUCTION

CLIENT/SITE NAME: NCBC Davisville / IR Program Site 09 / Allen Harbor Landfill	
DATE INSTALLED: 3/15/95	PROJECT No. 29600.32.3291
ELEVATION OF GROUND SURFACE: 11.2	COORDINATES: N: 196380.4 E: 522337.9
ELEVATION TOP OF WELL RISER: 13.70	EA INSPECTOR: J. Shapiro
DEPTH TO WATER: DATE/TIME	WELL No. MW09-21D
DRILLING METHOD/DEPTH: 8 1/4 in. Hollow-Stem Auger 0-24' 5 7/8 in. Rollerbit 24-48'	

4 in. Flush-joint casing 48-59'
HX core 59-64'

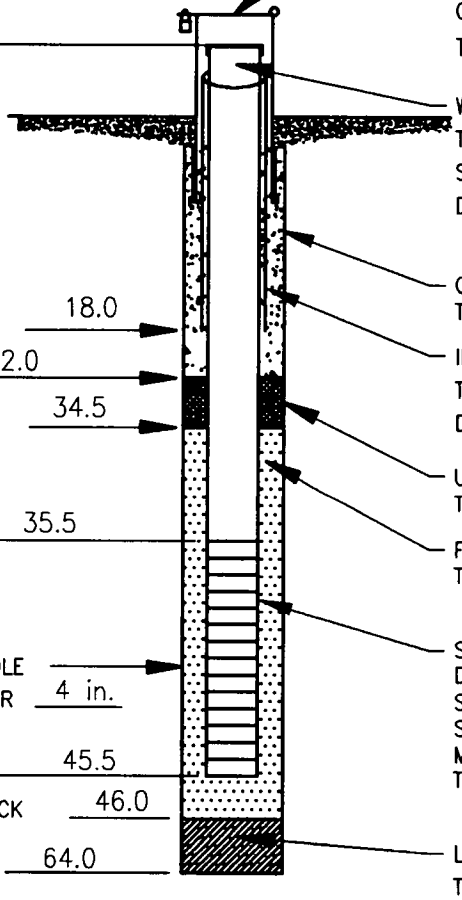

PROTECTIVE CASING
TYPE: Steel
LOCKING: yes
STICK UP: 3.24 ft.
DIAMETER: 8 in.

GROUND SURFACE
TYPE: unpaved

WELL RISER
TYPE: PVC
STICK UP: 2.53 ft.
DIAMETER: 2 in.

GROUT
TYPE: cement/bentonite

INNER CASING
TYPE: steel
DIAMETER: 6 in.

UPPER SEAL
TYPE: 1/4 in. bentonite pellets

FILTERPACK
TYPE: grade Ø Øsand

SCREEN
DIAMETER: 2 in.
SLOT SIZE: 6
SCHEDULE: 40
MATERIAL: PVC
TYPE OF PIPE JOINTS: thread

LOWER SEAL
TYPE: 3/8 in. bentonite chips

TOP OF RISER

RISER LENGTH 38.03

INNER CASING DEPTH 18.0

TOP OF SEAL 32.0

TOP OF FILTER PACK 34.5

TOP OF SCREEN 35.5

SCREEN LENGTH 10

BOREHOLE DIAMETER 4 in.

BOTTOM OF SCREEN 45.5

BOTTOM OF FILTER PACK 46.0

BOTTOM OF BORING 64.0

MONITORING WELL CONSTRUCTION
(ALL DEPTH MEASURMENTS IN FT. BELOW GROUND SURFACE)

EA ENGINEERING, SCIENCE, AND TECHNOLOGY

DWG. FILE No. F:\2960032\3291\DWG\MW-21D

MONITORING WELL CONSTRUCTION

CLIENT/SITE NAME: NCBC Davisville / IR Program Site 09 / Allen Harbor Landfill	
DATE INSTALLED: 3/6/95	PROJECT No. 29600.32.3291
ELEVATION OF GROUND SURFACE: 11.2	COORDINATES: N: 196373.5 E: 522337.7
ELEVATION TOP OF WELL RISER: 12.62	EA INSPECTOR: D. Acampora
DEPTH TO WATER: DATE/TIME	WELL No. MW09-21S
DRILLING METHOD/DEPTH: 4 1/4 in. Hollow-Stem Auger 0-22'	

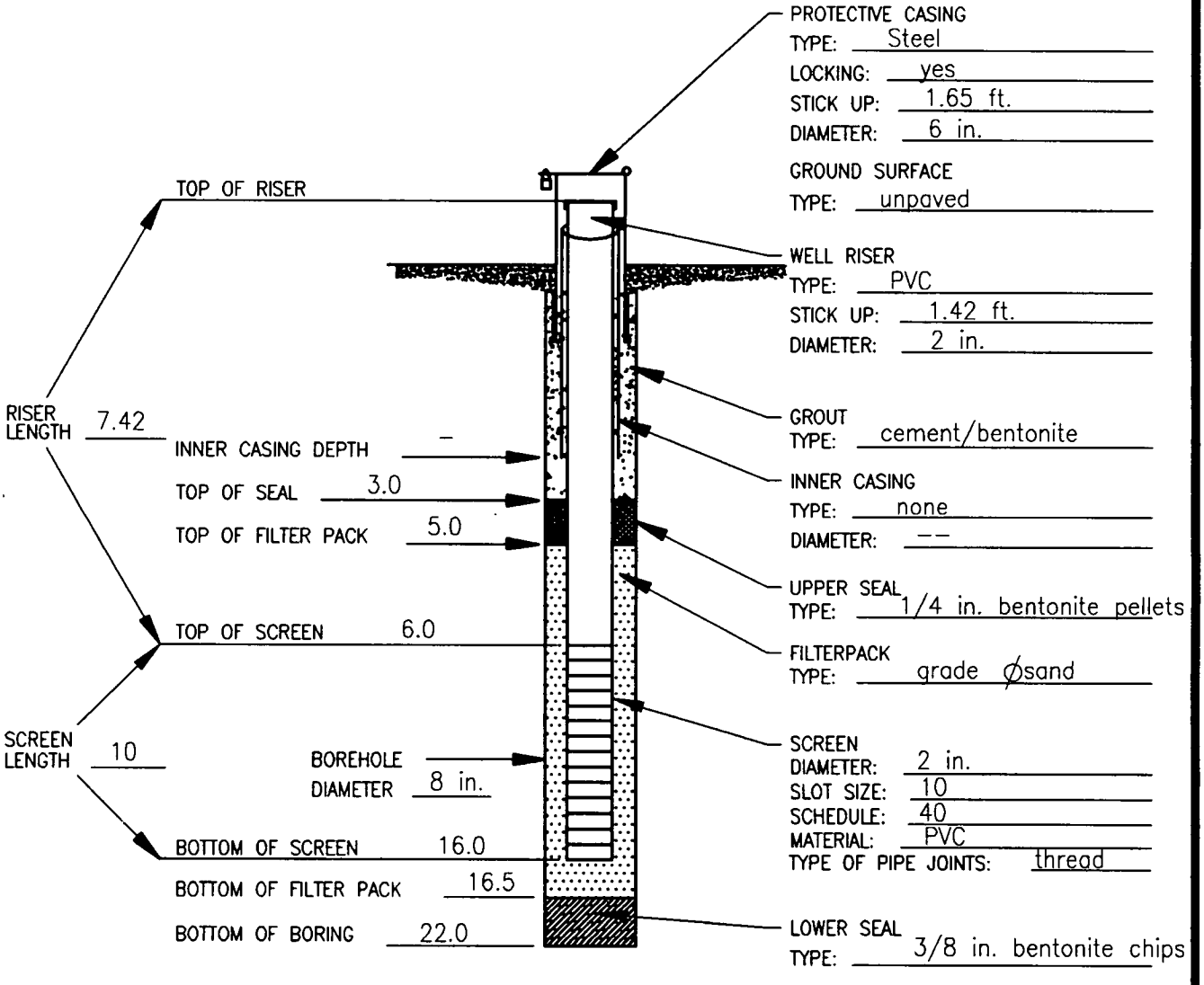

MONITORING WELL CONSTRUCTION
(ALL DEPTH MEASURMENTS IN FT. BELOW GROUND SURFACE)

EA ENGINEERING, SCIENCE, AND TECHNOLOGY

DWG. FILE No. F:\29600.32\3291\DWG\MW-21S

MONITORING WELL CONSTRUCTION

CLIENT/SITE NAME: NCBC Davisville / IR Program Site 09 / Allen Harbor Landfill	
DATE INSTALLED: 3/7/95	PROJECT No. 29600.32.3291
ELEVATION OF GROUND SURFACE: 7.6	COORDINATES: N: 196816.7 E: 522229.0
ELEVATION TOP OF WELL RISER: 8.70	EA INSPECTOR: D. Acampora
DEPTH TO WATER: DATE/TIME	WELL No. MW09-22S
DRILLING METHOD/DEPTH: 4 1/4 in. Hollow-Stem Auger 0-12'	

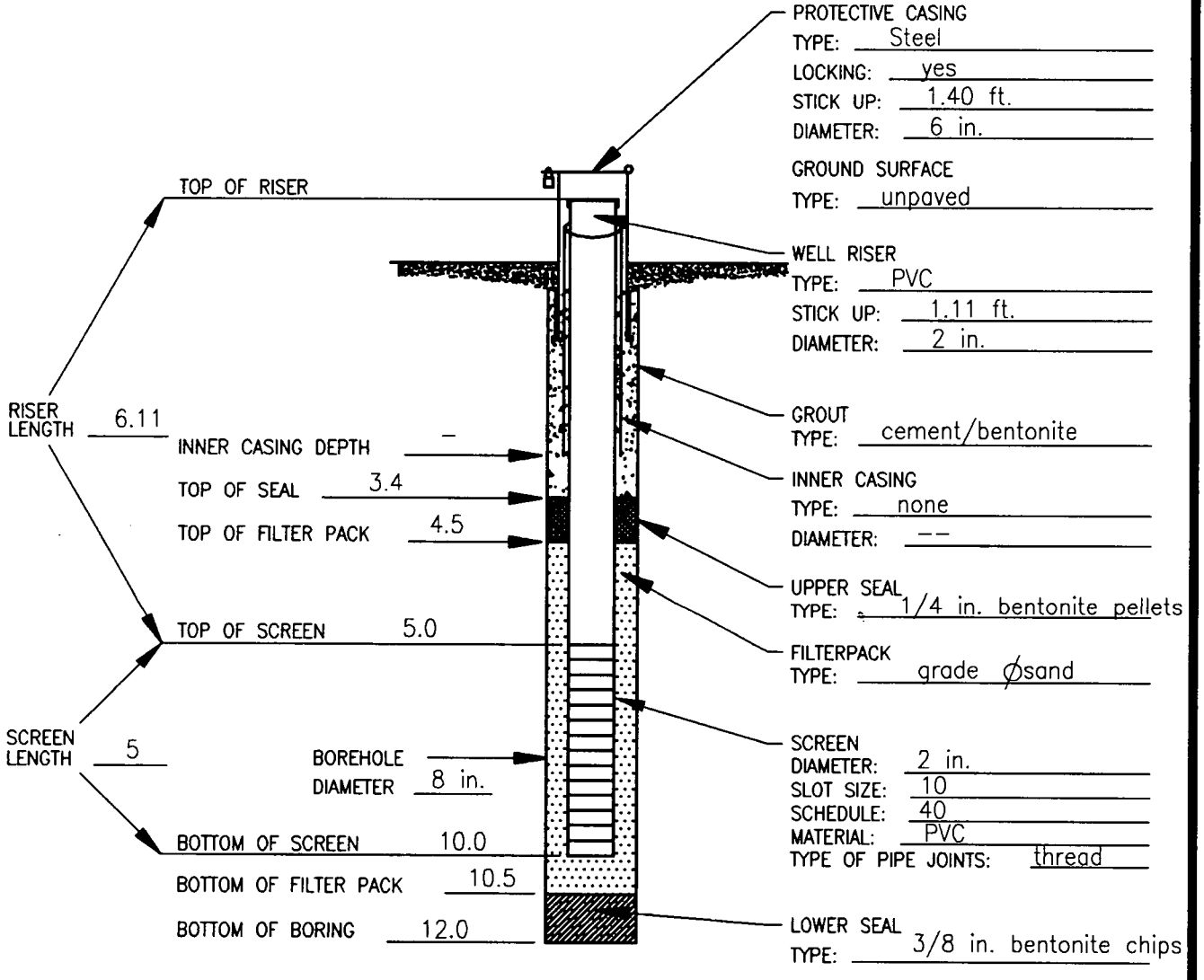

MONITORING WELL CONSTRUCTION
(ALL DEPTH MEASURMENTS IN FT. BELOW GROUND SURFACE)

EA ENGINEERING, SCIENCE, AND TECHNOLOGY

DWG. FILE No. F:\29600.32\3291\DWG\MW-22S

MONITORING WELL CONSTRUCTION

CLIENT/SITE NAME: NCBC Davisville / IR Program Site 09 / Allen Harbor Landfill	
DATE INSTALLED: 4/3/95	PROJECT No. 29600.32.3291
ELEVATION OF GROUND SURFACE: 18.8	COORDINATES: N: 196840.8 E: 522762.3
ELEVATION TOP OF WELL RISER: 20.7	EA INSPECTOR: J. Shapiro
DEPTH TO WATER: DATE/TIME	WELL No. MW09-23D
DRILLING METHOD/DEPTH: 8 1/4 in. Hollow-Stem Auger 0-33', 5 7/8 in. Rollerbit 33-67', HX core 68.3-73.3'	

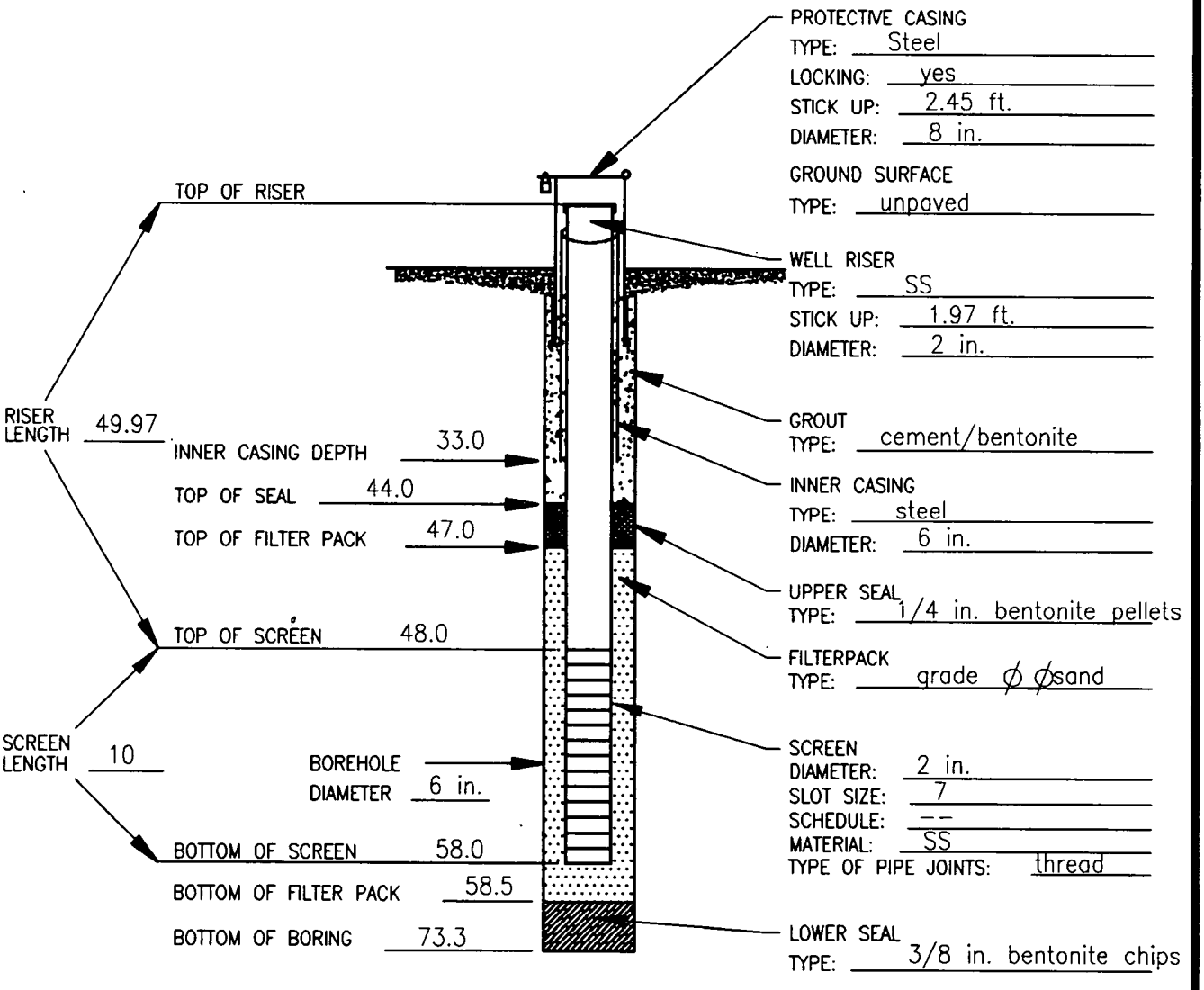

MONITORING WELL CONSTRUCTION
(ALL DEPTH MEASURMENTS IN FT. BELOW GROUND SURFACE)

EA ENGINEERING, SCIENCE, AND TECHNOLOGY

DWG. FILE No. F:\29600.32\3291\DWG\MW-23D

MONITORING WELL CONSTRUCTION

CLIENT/SITE NAME: NCBC Davisville / IR Program Site 09 / Allen Harbor Landfill	
DATE INSTALLED: 3/7/95	PROJECT No. 29600.32.3291
ELEVATION OF GROUND SURFACE: 18.5	COORDINATES: N: 196845.8 E: 522766.6
ELEVATION TOP OF WELL RISER: 19.84	EA INSPECTOR: J. Shapiro
DEPTH TO WATER: DATE/TIME	WELL No. MW09-23S
DRILLING METHOD/DEPTH: 4 1/4 in. Hollow-Stem Auger 0-26'	

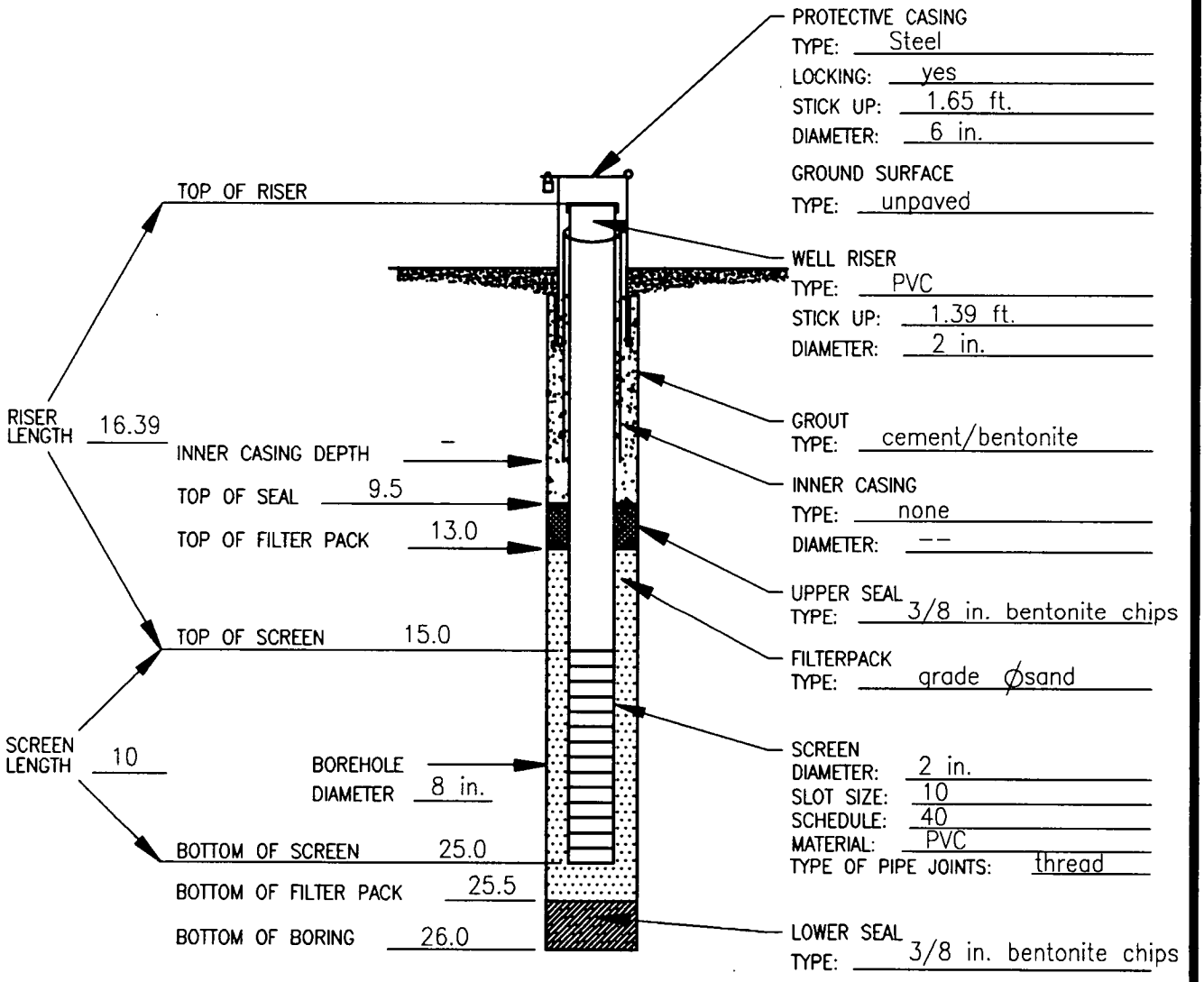

MONITORING WELL CONSTRUCTION
(ALL DEPTH MEASURMENTS IN FT. BELOW GROUND SURFACE)

EA ENGINEERING, SCIENCE, AND TECHNOLOGY

DWG. FILE No. F:\2960032\3291\DWG\MW-23S

MONITORING WELL CONSTRUCTION

CLIENT/SITE NAME: NCBC Davisville / IR Program Site 09 / Allen Harbor Landfill	
DATE INSTALLED: 4/5/95	PROJECT No. 29600.32.3291
ELEVATION OF GROUND SURFACE: 8.9	COORDINATES: N: 196546.7 E: 522124.0
ELEVATION TOP OF WELL RISER: 10.49	EA INSPECTOR: J. Shapiro
DEPTH TO WATER: DATE/TIME	WELL No. MW09-24D
DRILLING METHOD/DEPTH: 8 1/4 in. Hollow-Stem Auger 0-16', 5 7/8 in. Rollerbit 16-18', 5 in. flush-joint casing 18-33', HX core 33-38'	

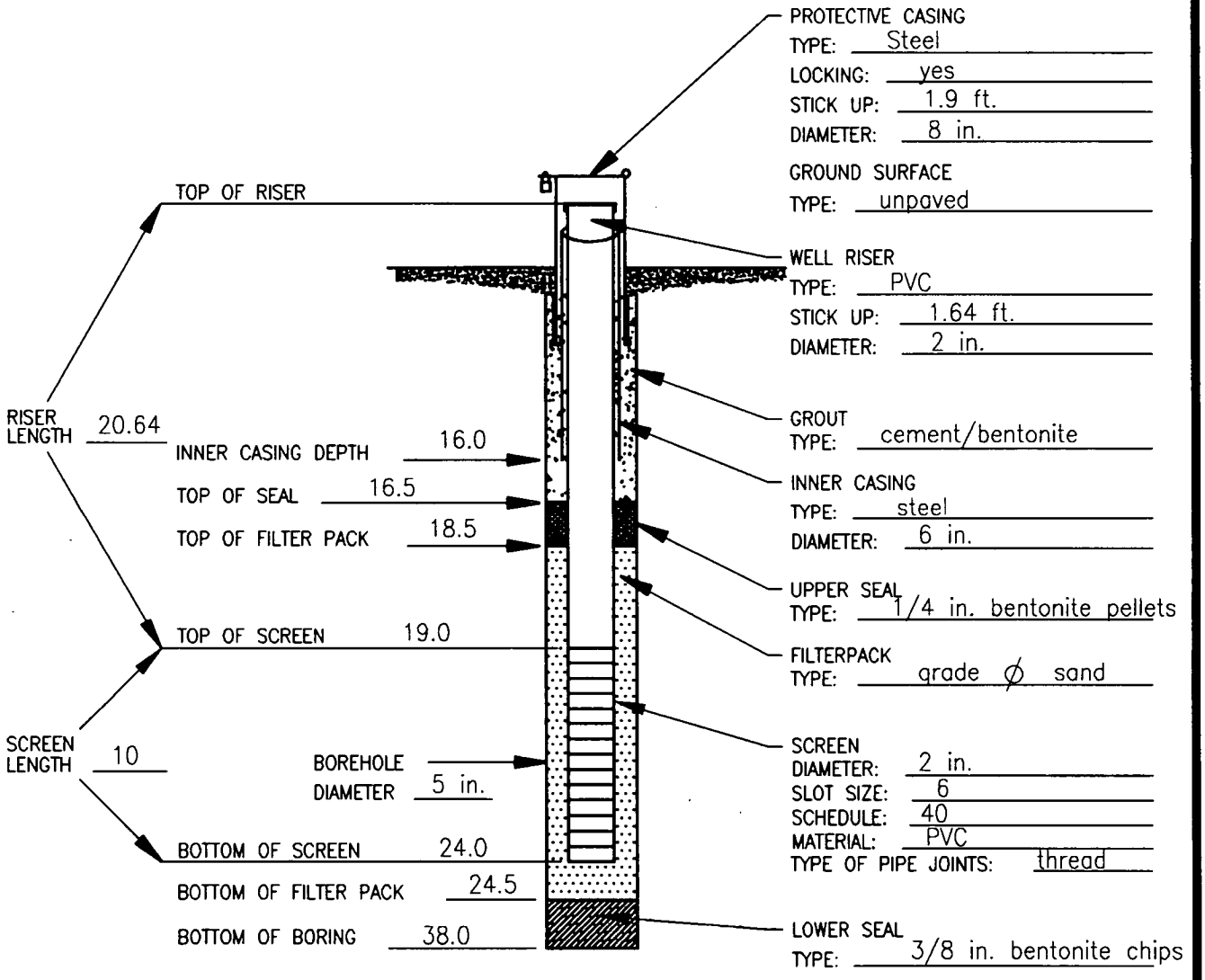

MONITORING WELL CONSTRUCTION
(ALL DEPTH MEASURMENTS IN FT. BELOW GROUND SURFACE)

EA ENGINEERING, SCIENCE, AND TECHNOLOGY

DWG. FILE No. F:\29600032\3291\DWG\MW-24D

MONITORING WELL CONSTRUCTION

CLIENT/SITE NAME: NCBC Davisville / IR Program Site 09 / Allen Harbor Landfill	
DATE INSTALLED: 3/7/95	PROJECT No. 29600.32.3291
ELEVATION OF GROUND SURFACE: 8.5	COORDINATES: N: 196541.0 E: 522125.4
ELEVATION TOP OF WELL RISER: 9.75	EA INSPECTOR: D. Acampora
DEPTH TO WATER: DATE/TIME	WELL No. MW09-24S
DRILLING METHOD/DEPTH: 4 1/4 in. Hollow-Stem Auger	

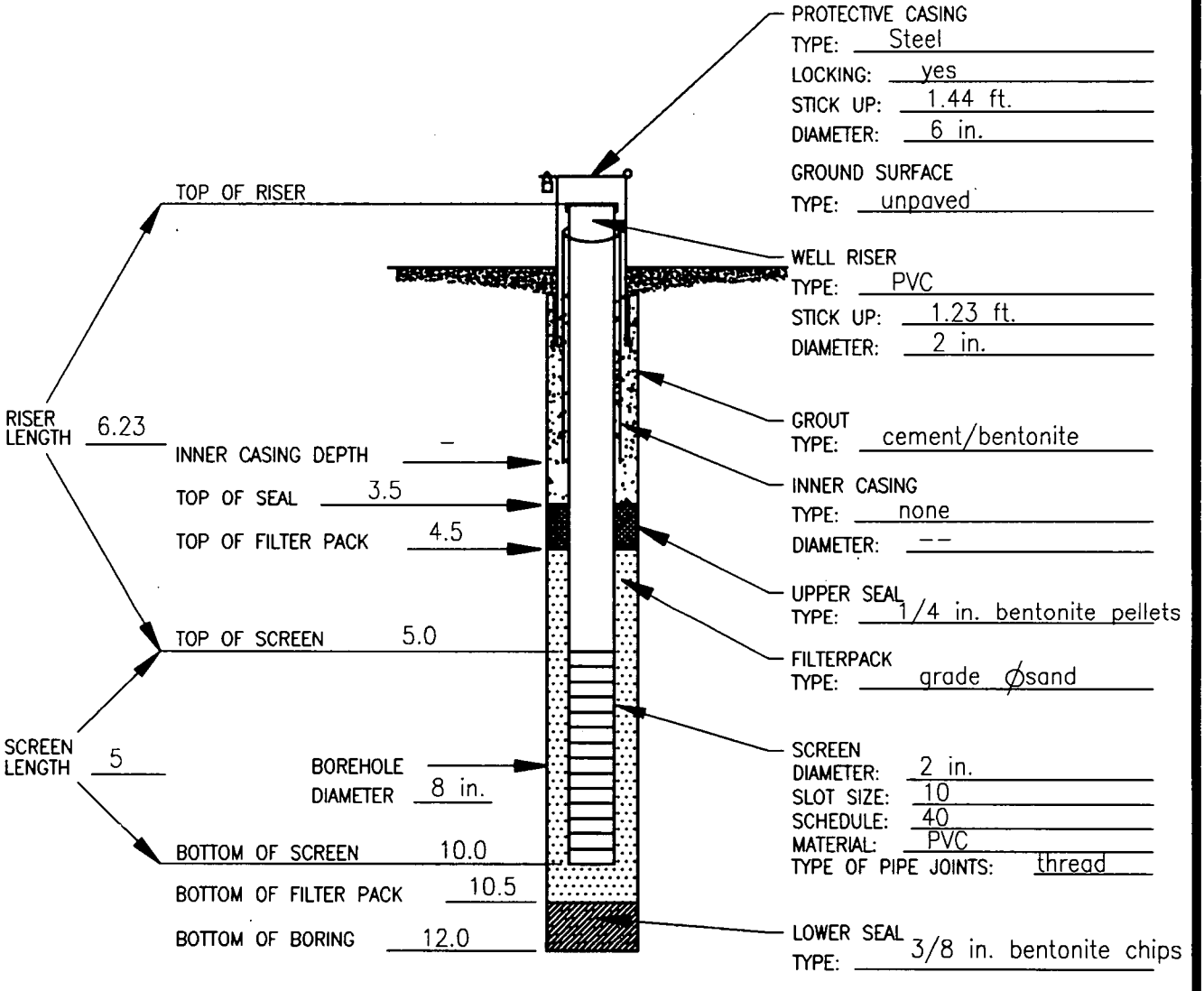

MONITORING WELL CONSTRUCTION
(ALL DEPTH MEASURMENTS IN FT. BELOW GROUND SURFACE)

EA ENGINEERING, SCIENCE, AND TECHNOLOGY

DWG. FILE No. F:\29600032\3291\DWGS\MW-24S

APPENDIX D

PHASE I AND II RI BORING LOGS AND WELL DIAGRAMS

TRC Companies, Inc.	Project: NCBC DAVISVILLE RI/FS	Project N.: 8900063	Sheet: 1 of 1	Boring No.: B-09-01
Boring Log	Location: SITE 9 BORING 1		Date Begun: 16 OCT 89	Date Comp.: 16 OCT 8
Client: NORTHERN DIVISION NAVAL FACILITIES ENGINEERING COMMAND	Boring Contractor/Foreman: EMPIRE SOILS INVESTIGATIONS\RAY MONTANA		TRCC Geologist: E KOLM	

	CASING	SAMPLER	CORER
TYPE		SPLIT SPOON	
DIA.		2+3" OD	
WT.		140 LBS	
FALL		30"	

Rock Cored (ft)	Overburden (ft)	Ground Elevation	Coordinates
NA		7.01 MSL	
Core Recovery (ft)	**Samples Coll.**	**Depth/EL Top of Bedrock**	**Well Installed**
NA	6	-	(Yes) No
Core Boxes	**Total Depth**	**Depth/EL Ground Water**	**Well No.**
NA	17.0'	2.7'	MW-9-1

Depth	Sample No.	Rock Core/Rec (in.)	Rock RQD	Soil Interval (ft)	Soil Pen/Rec (in.)	Soil Blows/6"	Lab Sample No.	Sample Description	Field Testing Observations
	1			0-2	29\14*	21-22-26-26	B-09-01-00-S	d brown c-m+-f SAND, little gravel tr silt (SW)	
1									
2	2			2-4	18\10*	29-26-36		0-4" d brown c-m SAND, tr gravel tr f sand (SW) 4-10" wet lt brown c SAND + gravel (SP-GP)	water table
3									
4	3			4-6	29\7	7-4-2-2		d brown PEAT, org material PT	
5									
6	4			6-8	29\22	6-9-10-13		0-8" brown PEAT (PT) 8-15" wet d brown f SAND + silt (SP-SM) 15-22" wet brown m-f SAND (SP)	600 ppm
7									
8									
9									
10	5			10-12	29\16	8-11-15-18		saturated gray f-vf SAND, little silt (SP)	
11									
12									
13									
14									
15	6			15-17	29\9	40-33-38-28		SAME (SP)	
16									

Granular Soils		Cohesive Soils		Proportions Used	
Blows/ft	Density	Blows/ft	Density		
0-4	V. Loose	<2	V. Soft	trace	0 to 10%
4-10	Loose	2-4	Soft	little	10 to 20%
10-30	M. Dense	4-8	M. Stiff	some	20 to 35%
30-50	Dense	8-15	Stiff	and	35 to 50%
		15-30	V. Stiff		

Notes:

Field screening done w/ OVA

* Designates a 3" OD split spoon sampler.

AF-083

TRC Companies, Inc. Boring Log	Project: NCBC DAVISVILLE RI\FS	Project No.: 8900063	Sheet: 1 of 2	Boring No.: B-09-02
	Location: SITE 9 BORING 2		Date Begun: 17 OCT 89	Date Comp.: 17 OCT 89
Client: NORTHERN DIVISION NAVAL FACILITIES ENGINEERING COMMAND	Boring Contractor/Foreman: EMPIRE SOILS INVESTIGATIONS/RAY MONTANA		TRCC Geologist: E KOLM	

	CASING	SAMPLER	CORER
TYPE		SPLITSPOON	
DIA.		2" OD	
WT.		140 LBS	
FALL		30"	

Rock Cored (ft)	Overburden (ft)	Ground Elevation	Coordinates
NA			
Core Recovery (ft)	**Samples Coll.**	**Depth/El. Top of Bedrock**	**Well Installed**
NA	6		(Yes) No
Core Boxes	**Total Depth**	**Depth/El. Ground Water**	**Well No.**
NA	22.0'	4.0'	MW-9-2

Depth	Sample No.	Rock Core/Rec (In.)	Rock RQD	Soil Interval (ft)	Soil Pen/Rec (In.)	Soil Blows/6"	Lab Sample No.	Sample Description	Field Testing/ Observations
	1			0-2	24\14*	17-41-72-112	B-09-02-00-S	0-9" brown m SAND, orgs, tr gravel, tr silt (SP)	Ø ppm
1								9-7" d brown m-f SAND, tr gravel, tr silt (SW)	
								7-14" brown c-m SAND, tr silt (SW)	
2	2			2-4	24\20*	197-115-93-61	B-09-02-02-S	0-13" moist d gray f SAND, tr gravel tr silt (SP)	0.2 ppm
3								13-20" moist orange-brown c-m-f SAND little gravel, tr silt, odiferous (SW)	
4	3			4-6	24\13*	18-23-39-20			water table
5								0-7" SAME (SW) wet	25.2 ppm
6								7-13" wet d gray f SAND little silt odiferous (SP-SM)	
7									
8									
9									
10	4			10-12	24\19	11-19-17-6		wet d gray SILT, tr vf sand (ML)	17 ppm
11									
12									
13									
14									
15	5			15-17	24\12	3-4-3-4		d gray SILT, little vf SAND (ML)	17 ppm
16									

Granular Soils Blows/ft	Density	Cohesive Soils Blows/ft	Density	Proportions Used	
0-4	V. Loose	<2	V. Soft	trace	0 to 10%
4-10	Loose	2-4	Soft	little	10 to 20%
10-30	M. Dense	4-8	M. Stiff	some	20 to 35%
30-50	Dense	8-15	Stiff	and	35 to 50%
		15-30	V. Stiff		

Notes:
Field screening done w/ OVA Model 128
* Designates use of 3" OD Split Spoon Sampler.

AF-083

TRC Companies, Inc.

Boring Log

Project	Project No.	Sheet	Boring N
NCBC DAVISVILLE RI\FS	8400063	2 of 2	B-09-0

Location	Date Begun	Date Comp
SITE 9 BORING 2	17 OCT 89	17 OCT

Depth	Sample No.	Rock Core/Rec (In.)	Rock RQD	Soil Interval (ft)	Soil Perv/Rec (In.)	Soil Blows/6"	Lab Sample No.	Sample Description	Field T g/ Observati s
18	6			18-20	24\12	4-6-6-9		d gray SILT (ML)	
19									
20									
21									
22								END OF BORING	
23									
24									
25									
26									
27									
28									
29									
30									
31									
32									
33									
34									
35									
36									
37									

Granular Soils		Cohesive Soils		Proportions Used	
Blows/ft	Density	Blows/ft	Density		
0-4	V. Loose	<2	V. Soft	trace	0 to 10%
4-10	Loose	2-4	Soft	little	10 to 20%
10-30	M. Dense	4-8	M. Stiff	some	20 to 35%
30-50	Dense	8-15	Stiff	and	35 to 50%
		15-30	V. Stiff		

Notes:

AF-083

TRC Companies, Inc.

Boring Log

Project	Project No.	Sheet	Boring No.
NCBC DAVISVILLE RI\FS	8400063	1 of 1	B-09-03

Location	Date Begun	Date Comp.
SITE 9 ALLEN HARBOR	10/16/89	10/16/89

Client	Boring Contractor/Foreman	TRCC Geologist
NORTHERN DIVISION NAVAL FACILITIES ENGINEERING COMMAND	EMPIRE SOILS INVESTIGATIONS\RAY MONTANA	D MC CABE

	CASING	SAMPLER	CORER
TYPE		Shelby tube split spoon	
DIA.		2+3" OD	
WT.		140 LBS	
FALL		30"	

Rock Cored (ft)	Overburden (ft)	Ground Elevation	Coordinates
NA			
Core Recovery (ft)	**Samples Coll.**	**Depth/El. Top of Bedrock**	**Well Installed**
NA	7 spoons, 1 shelby	NA	(Yes) No
Core Boxes	**Total Depth**	**Depth/El. Ground Water**	**Well No.**
N/A	17'		MW-9

Depth	Sample No.	Rock Core/Rec (in.)	Rock RQD	Soil Interval (ft)	Soil Pen/Rec (in.)	Soil Blows/6"	Lab Sample No.	Sample Description	Field Testing/ Observations
	1			0-2	24\18*	9-11-15-12	B-9-3-00-5	0-4" Sandy loam, top soil 4-18" brown f SAND, tr silt (SP)	
1									
2	2			2-4	24\16*	10-9-9-8		lt brown f SAND, tr silt (SP)	
3									
4	3			4-6	24/18*	7-6-6-7	B-9-3-04-5	tan f SAND, little silt (SP)	
5									
6	4			6-8	24/20			gray-tan f SAND, little silt (SP) layering evident	
7									
8									
9									
10	5			10-12	24\16			dk gray vf silty SAND (SM)	
11									
12									
13	6			12.5-14.5	NREC				shelby tube collected here
14									
15	7			15-17	24\20			dk gray SILT, little-tr f SAND (ML)	shelby tube
16									

Granular Soils		Cohesive Soils		Proportions Used	
Blows/ft	Density	Blows/ft	Density		
0-4	V. Loose	<2	V. Soft	trace	0 to 10%
4-10	Loose	2-4	Soft	little	10 to 20%
10-30	M. Dense	4-8	M. Stiff	some	20 to 35%
30-50	Dense	8-15	Stiff	and	35 to 50%
		15-30	V. Stiff		

Notes:
* denotes use of 3" OD split spoon sampler

AF-083

TRC Companies, Inc.

Boring Log

Project	Project No.	Sheet	Boring No.
NCBC DAVISVILLE RI\FS	84000063	1 of 3	B-9-4

Location	Date Begun	Date Comp.
SITE 9 ALLEN HARBOR	10/25/89	10/26/89

Client	Boring Contractor/Foreman	TRCC Geologist
NORTHERN DIVISION NAVAL FACILITIES ENGINEERING COMMAND	EMPIRE SOILS INVESTIGATIONS\RAY MONTANA	D MCCABE

	CASING	SAMPLER	CORER
TYPE		SPLIT SPOON	NX
DIA.		2"OD	2" ID
WT.		140 LBS	
FALL		30"	

Rock Cored (ft)	Overburden (ft)	Ground Elevation	Coordinates
6.0'	37.0'		
Core Recovery (ft)	**Samples Coll.**	**Depth/El. Top of Bedrock**	**Well Installed**
2.0'	4 SPLIT SPOONS	37.0'	(Yes) No
Core Boxes	**Total Depth**	**Depth/El. Ground Water**	**Well No.**
1	43.0'		MW-9-3

Depth	Sample No.	Rock: Core/Rec (in.)	Rock: RQD	Soil: Interval (ft)	Soil: Pen/Rec (in.)	Soil: Blows/6"	Lab Sample No.	Sample Description	Field Testing/ Observations
1									
2									
3									
4									
5									
6									
7									
8									
9									
10									
11									
12									
13									
14									
15									
16									

Granular Soils		Cohesive Soils		Proportions Used	
Blows/ft	Density	Blows/ft	Density		
0-4	V. Loose	<2	V. Soft	trace	0 to 10%
4-10	Loose	2-4	Soft	little	10 to 20%
10-30	M. Dense	4-8	M. Stiff	some	20 to 35%
30-50	Dense	8-15	Stiff	and	35 to 50%
		15-30	V. Stiff		

Notes:

NO SAMPLES COLLECTED FROM 0-20'
STRATA INFERRED FROM ADJACENT BORING B-9-2.

AF-083

TRC Companies, Inc.	Project: NCBC DAVISVILLE RI/FS	Project No. 840063	Sheet 2 of 3	Boring No. B-9-4
Boring Log	Location: SITE 9 ALLEN HARBOR		Date Begun 10/25/89	Date Comp. 10/26/89

Depth	Sample No.	Rock Core/Rec (in.)	Rock RQD	Soil Interval (ft)	Soil Pen/Rec (in.)	Soil Blows/6"	Lab Sample No.	Sample Description	Field Test Observations
18									
19									
20	1			20-22	24\20	4-3-1-3		d gray SILT, little f sand quick dilatancy. layer of gray-tan m-f SAND (ML)	
21									
22									
23									
24									
25	2			25-27	24\20	w-w-1-2		d gray SILT, tr vf sand, tr clay (ML)	water added to well-hole running sand
26									
27									
28									
29									
30	3			30-32	24\16	w-1-2-1		0-12" gray vf-f+ SAND, little silt (SM)	
31								12-16" gray SILT, tr f SAND (ML)	
32									
33									
34									
35	4			35-37	24\16	3-3-15-12		gray f SAND, some silt (SP-SM) alternating layers of sandy silt + silty sand.	
36									
37		6.0/2.0		37-43					auger refusal

Granular Soils		Cohesive Soils		Proportions Used	
Blows/ft	Density	Blows/ft	Density		
0-4	V. Loose	<2	V. Soft	trace	0 to 10%
4-10	Loose	2-4	Soft	little	10 to 20%
10-30	M. Dense	4-8	M. Stiff	some	20 to 35%
30-50	Dense	8-15	Stiff	and	35 to 50%
		15-30	V. Stiff		

Notes:

w- denotes spoon advanced under weight of hammer.

AF-083

TRC Companies, Inc.

Boring Log

Project	Project No.	Sheet	Boring No.
NCBC DAVISVILLE ~~HRS~~ RI/FS	8900063	3 of 3	B-9-4
Location		**Date Begun**	**Date Comp.**
SITE 9 ALLEN HARBOR		10/25/89	10/26/89

Depth	Sample No.	Rock Core/Rec (In.)	Rock RQD	Soil Interval (ft)	Soil Pen/Rec (In.)	Soil Blows/6"	Lab Sample No.	Sample Description	Field Testing/ Observation
39									
40									
41									
42									
43								END OF BORING	
44									
45									
46									
47									
48									
49									
50									
51									
52									
53									
54									
55									
56									
57									
58									

Granular Soils		Cohesive Soils		Proportions Used	
Blows/ft	Density	Blows/ft	Density		
0-4	V. Loose	<2	V. Soft	trace	0 to 10%
4-10	Loose	2-4	Soft	little	10 to 20%
10-30	M. Dense	4-8	M. Stiff	some	20 to 35%
30-50	Dense	8-15	Stiff	and	35 to 50%
		15-30	V. Stiff		

Notes:

AF-083

TRC Companies

Monitoring Well Construction Summary

Well No. MW-9-2

Pr ject: NCBC DAVISVILLE RI\FS No.: 8900063

Client: NOR DIV NAVAL FAC ENG COM Date Completed: 17 OCT 89

Location: SITE 9

B ring Contractor: EMPIRE SOILS INC Method: AUGERS

Alliance Geologist: E KULM

Reference Elevation:

Elev. Ground Surface:

Depth to Ground Water:

Development Date:

Development Method: SURGE + PURGE

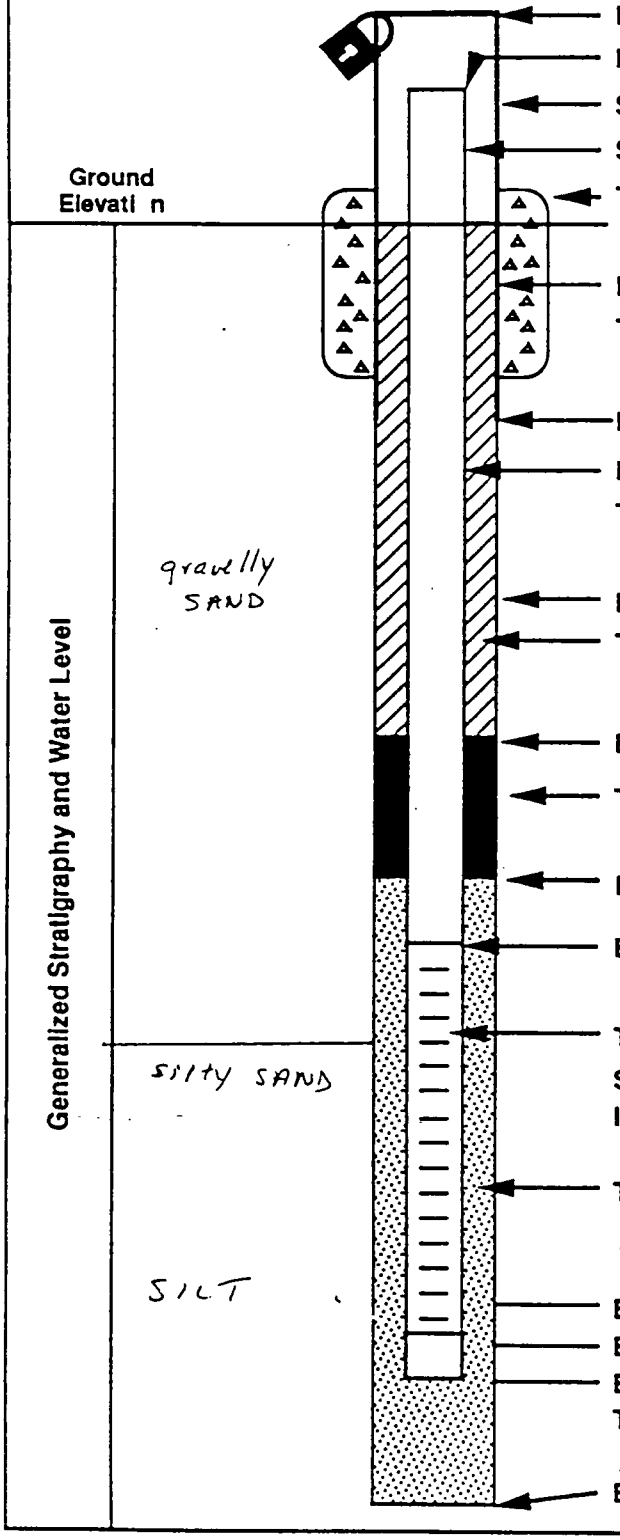

Elevation top of protective casing:

Elevation of top riser pipe:

Stick-up of protective casing:

Stick-up of riser pipe:

Type of surface seal: CEMENT APRON

I.D. of protective casing: 6"

Type of protective casing: STEEL STAND PIPE

Depth bottom of protective casing

Riser pipe I.D. 2"

Type of riser pipe: SCHEDULE 40 PVC

Borehole diameter: 8"

Type of backfill: CEMENT/BENTONITE GROUT 10:1 RATIO BY WEIGHT

Elevation/depth top of seal: 1.0'

Type and thickness of seal: BENTONITE PELLETS

Depth top of filter pack: 1.5'

Elevation/Depth top of screen: 2.0'

Type of screen: SLOTTED PVC

Slot size: 10 SLOT

I.D. of screen 2"

Type of filter/sand pack: #1 MORIE SILICA SAND

Elevation/depth bottom of screen: 12.0'

Elevation/depth bottom of well: 12.0'

Elevation/depth bottom of filter pack:

Type of backfill below bservation well: NATURAL SILT MATERIALS

Elevation/depth of boreh le: 22.0'

BL/2

TRC Companies

Monitoring Well Construction Summary

Well No. B9-4 MW-9-3

Project: NCBC DAVISVILLE RI/FS No.: 8900063

Client: NOR DIV NAVAL FAC ENG COM Date Completed: 10/26/89

Location: SITE 9 ALLEN HARBOR BORING B-09-04

Boring Contractor: EMPIRE SOILS INC Method: AUGERS

Alliance Geologist: D McCABE

Reference Elevati n:

Elev. Ground Surface:

Depth to Ground Water:

Development Date:

Development Method: SURGE & PURGE

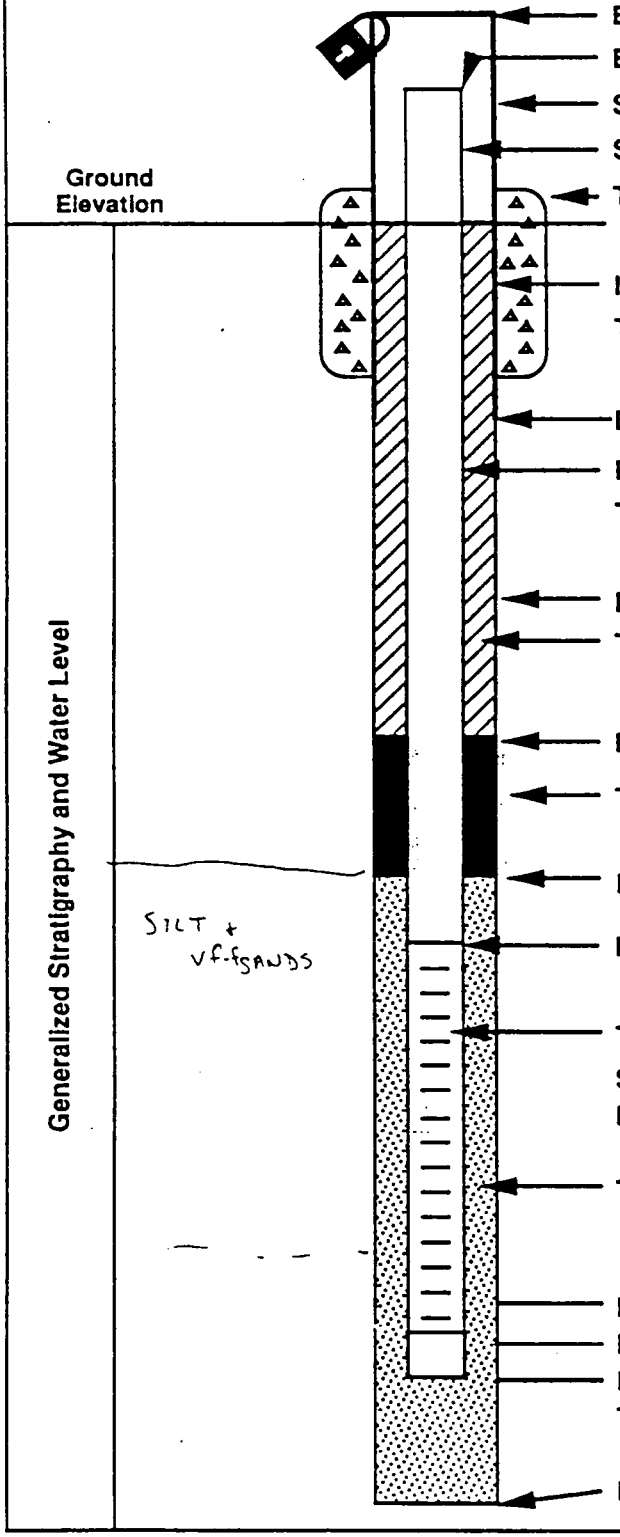

Elevation top of protective casing:

Elevation of top riser pipe:

Stick-up of protective casing:

Stick-up of riser pipe:

Type of surface seal: CEMENT APRON

I.D. of protective casing: 6"

Type of protective casing: STEEL STAND PIPE

Depth bottom of protective casing

Riser pipe I.D. 2"

Type of riser pipe: SCHEDULE 40 PVC

Borehole diameter: 8"

Type of backfill: CEMENT/BENTONITE GROUT 10:1 RATIO BY WEIGHT

Elevation/depth top of seal: 21.0'

Type and thickness of seal: BENTONITE PELLETS: 2'

Depth top of filter pack: 23.0'

Elevation/Depth top of screen: 24.5'

Type of screen: SLOTTED PVC

Slot size: 10 SLOT

I.D. of screen 2"

Type of filter/sand pack: #1 MORIE SILICA SAND

Elevation/depth bottom of screen: 34.5'

Elevation/depth bottom of well: 35.0'

Elevation/depth bottom of filter pack: 35.0'

Type of backfill below observation well: NATURAL SANDS

Elevation/depth of bor h l : 43.0'

8L/2

Test Boring: B-01
Site 09 - Allen Harbor Landfill
NCBC - Davisville
Boring Depth: 20 FEET

Drilling Company: D.L. Maher
Drillers: J. Graglia & B. Burns
TRC Inspector: T. McMorrow
Test Boring Coordinates:
N 196,442.81
E 522,149.93

Date Started: May 27, 1993
Date Completed: May 27, 1993
Depth to Water: 13 FEET
Ground Elevation: 13.50 FEET

Depth (feet)	Blow Counts		Field Measurements OVA (ppm)	HNu (ppm)	Soil Description	Lithology
0-2	3	7	0	0	Black/Grey FILL, M-C sand, tr wood & pottery debris, dry, no odor.	0.0
	12	20			16" recovery.	
2-4	14	7	0	0	Black FILL, M sand, tr metal & glass debris.	
	9	8			10" recovery.	
4-6	7	8	0	0	Dk Brown FILL, M-C sand, tr metal debris, moist, no odor.	
	15	24			16" recovery.	
6-8	30	32	0.4	0	0-8" Dk Brown FILL, F-M sand, little gravel.	
	26	49			8-12" Concrete fragments. 12-16" Dk Brown F SAND, tr silt & gravel, dry.	
9-11	10	13	2	0	Dk Brown FILL, M-F sand, moist, no odor.	
	100/3"				8" recovery.	11.0
11-13	4	12	0	0	Dk Brown F-M SAND, little gravel, moist.	
	5	8			8" recovery.	
13-15	8	7	4	0	0-10" Same as above.	14.0
	12	18			10-22" Brown/Grey SILT, little F sand, wet.	
18-20	8	7	2	0	Dk Grey SILT, tr F sand, wet, no odor.	
	7	9			20" recovery.	20.0

Sample 09-B1-01 collected from 0-2'
Sample 09-B1-07 collected from 12-14'

Test Boring: B-02
Site 09 - Allen Harbor Landfill
NCBC - Davisville
Boring Depth: 13 FEET

Drilling Company: D.L. Maher
Drillers: J. Graglia & B. Burns
TRC Inspector: T. McMorrow
Monitoring Well Coordinates:
N 196,674.89
E 522,325.34

Date Started: May 21, 1993
Date Completed: May 21, 1993
Depth to Water: 6 FEET
Ground Elevation: 10.94 FEET

Depth (feet)	Blow Counts		Field Measurements OVA (ppm)	HNu (ppm)	Soil Description	Lithology
0-2	-	-	0	0	0-12" Asphalt	0.0
	10	50/0"			12-20" Dk Brown FILL, F-M sand, tr silt, moist, no odor.	
2-4	100/4"		-	-	No Recovery. Wood in tip of split-spoon.	4.0
4-6	8	14	0	0	Brown/Grey F-M SAND, moist, no odor.	
	14	15			17" recovery.	6.0
6-8	10	10	0	0	Grey/brown F SAND, tr silt, wet, no odor.	
	14	14			24" Recovery.	
11-13	6	6	0	0	0-22" Same as above.	12.0
	5	4			22-24" Dk Grey SILT, tr fine sand, wet, no odor.	13.0

Sample 09-B2-01 collected from 0-2'
Sample 09-B2-03 collected from 4-6'

Test Boring: B-03
Site 09 - Allen Harbor Landfill
NCBC - Davisville
Boring Depth: 13 FEET

Drilling Company: D.L. Maher
Drillers: J. Graglia & B. Burns
TRC Inspector: T. McMorrow
Monitoring Well Coordinates:
N 196,436.11
E 522,370.84

Date Started: May 27, 1993
Date Completed: May 27, 1993
Depth to Water: 5 FEET
Ground Elevation: 9.44 FEET

Depth (feet)	Blow Counts		Field Measurements OVA (ppm)	HNu (ppm)	Soil Description	Lithology
0-2	3	12	10	0	Brown FILL, M-C sand, little gravel, wood & glass debris, no odor,	0.0
	30	30			dry. 16" recovery.	
2-4	50/2"		-	-	No Recovery.	
4-6	10	20	200	2	0-4" Dk Brown/black F-M SAND, little gravel, slight petroleum	
	13	10			odor. 4-18" Brown F SAND, tr silt, wet.	
6-8	50/0"		-	-	No Recovery.	
7-9	9	15	60	13	Black FILL, M-C sand, little gravel, strong odor, wet.	
	13	10			14" recovery.	
9-11	8	10	-	-	Black F-M SAND, tr silt, wet, no odor.	9.0
	10	11			4" recovery.	
11-13	12	12	40	0	Dk Grey SILT, little F sand, no odor.	11.0
	12	10			18" recovery.	
						13.0

Sample 09-B3-01 collected from 0-2'
Sample 09-B3-03 collected from 4-6'

Test Boring: B-04
Site 09 - Allen Harbor Landfill
NCBC - Davisville
Boring Depth: 21 FEET

Drilling Company: D.L. Maher
Drillers: J. Graglia & B. Burns
TRC Inspector: T. McMorrow
Monitoring Well Coordinates:
N 196,768.96
E 522,456.76

Date Started: MAY 19, 1993
Date Completed: MAY 19, 1993
Depth to Water: 12 FEET
Ground Elevation: 17.20 FEET

Depth (feet)	Blow Counts		OVA (ppm)	HNu (ppm)	Soil Description	Lithology
	Field Measurements					
0-2	14	24	0	0	0-8" Dk Brown F-M SAND, little gravel.	0.0
	50	44			8-17" Lt Brown M-C SAND, little gravel, no odor, moist.	
2-4	28	13	0	0	Brown M-F SAND, little gravel, moist, no odor.	
	22	15				
4-6	12	7	1	0	Grey FILL, M-C SAND, little/some gravel, paper in tip of split-spoon, moist, no odor. 8" recovery.	
	50/5"					
6-8	26	100/5"	15	2	Dk Brown/Black FILL, M-F sand, little paper and wood debris, moist, slight odor. 12" recovery.	
8-10	14	16	11	1	Black FILL, M-F sand, some/little glass and metal debris, moist, slight odor. 16" recovery.	
	19	30				
10-12	23	100/3"	-	-	No Recovery.	
12-14	15	36	200	-	Black FILL, F sand, some silt, petroleum odor, visible sheen.	
	100/3"					14.0
14-16	12	20	-	-	Dk Brown F SAND, tr silt, slight petroleum odor, wet. 18" recovery.	
	33	28				
19-21	1	1	-	-	Black F SAND, little silt, petroleum odor, wet. 20" recovery.	
	3	5				21.0

Sample 09-B4-01 collected from 0-2'
Sample 09-B4-05 collected from 8-10'

Test Boring: B-05
Site 09 - Allen Harbor Landfill
NCBC - Davisville
Boring Depth: 12 FEET

Drilling Company: D.L. Maher
Drillers: J. Graglia & B. Burns
TRC Inspector: T. McMorrow
Monitoring Well Coordinates:
N 196,560.73
E 522,524.47

Date Started: MAY 20, 1993
Date Completed: MAY 20, 1993
Depth to Water: Not determined
Ground Elevation: 18.80 FEET

Depth (feet)	Blow Counts		Field Measurements OVA (ppm)	HNu (ppm)	Soil Description	Lithology
0-2	3	13	0	-	Black FILL, M-F sand, tr silt, moist. 20" recovery.	0.0
	19	62				
2-4	39	42	0	-	Brown FILL, M-F sand, little gravel, asphalt pieces, moist, no odor. 20" recovery.	
	37	26				
4-6	15	23	3	-	0-4" Black FILL, F sand, little silt, moist, no odor.	
	30	14			4-12" Brown FILL, M-F sand, little gravel, moist.	
6-8	8	11	0	-	Brown F SAND, little silt, tr gravel, moist, no odor. 8" recovery.	
	14	23				
8-10	21	43	7	-	0-7" Brown FILL, F-M sand, little gravel, asphalt debris, moist.	
	80	100/3"			7-12" Black FILL, F SAND, little gravel & silt, moist, slight odor.	
10-12	70	100/3"	80	-	Black FILL, M-F sand, tr silt, trace wood & copper debris, moist, strong petroleum odor. 6" recovery.	12.0

Auger refusal at 11 feet.

Sample 09-B5-01 collected from 0-2'
Sample 09-B5-06 collected from 10-12'

Test Boring: B-06
Site 09 - Allen Harbor Landfill
NCBC - Davisville
Boring Depth: 18 FEET

Drilling Company: D.L. Maher
Drillers: J. Graglia & B. Burns
TRC Inspector: T. McMorrow
Monitoring Well Coordinates:
N 196,618.69
E 522,710.07

Date Started: MAY 20, 1993
Date Completed: MAY 20, 1993
Depth to Water: 16 FEET
Gound Elevation: 19.06 FEET

Depth (feet)	Blow Counts		Field Measurements OVA (ppm)	HNu (ppm)	Soil Description
0-2	10	23	0	1	Brown F-M SAND, little gravel, dry, no odor.
	27	18			14" recovery.
2-4	26	75	0	3	Same as above, 4" recovery.
	53	32			
4-6	25	24	0	0	Brown F-M SAND, tr gravel, dry, no odor. 2" recovery.
	19	12			
6-8	10	10	0	3	Same as above with thin wire pieces, dry, no odor.
	40	40			6" recovery.
8-10	6	9	0	6	Dk Brown F-M SAND, tr gravel & silt, moist, no odor.
	11	18			16" recovery.
10-12	20	19	7	1	0-6" Same as above
	21	100/3"			6-12" FILL, rags, nails, little fine sand, moist.
12-14	100/3"		60	12	Dk Grey F-M SAND and FILL (glass, wire), slight odor, moist.
					3" recovery.
14-16	20	85	90	-	Dk Grey F-M SAND, little silt, tr gravel, moist, no odor.
	66	34			2" recovery.
16-18	100/4"		100	-	Black FILL, F sand, little silt, wire screen & wood in tip of spoon,
					wet. 4" recovery.
17.5-19.5	100/0"		-	-	No recovery, wood in tip of split-spoon.

Lithology

Sample 09-B6-01 collected from 0-2'
Sample 09-B6-07 collected from 12-14'

Test Boring: B-07
Site 09 - Allen Harbor Landfill
NCBC - Davisville
Boring Depth: 24 FEET

Drilling Company: D.L. Maher
Drillers: J. Graglia & B. Burns
TRC Inspector: T. McMorrow
Monitoring Well Coordinates:
N 197,272.76
E 522,684.80

Date Started: MAY 19, 1993
Date Completed: MAY 19, 1993
Depth to Water: 12 FEET
Ground Elevation: 16.87 FEET

Depth (feet)	Blow Counts	Field Measurements OVA (ppm)	HNu (ppm)	Soil Description
0-2	7 18 27 100/5"	2	-	Dk Brown/black FILL, F-C sand, little gravel & concrete and asphalt debris, no odor, dry. 18" recovery.
2-4	80 100/5"	13	13	Dk Brown/Black FILL, M-C sand, some asphalt, slight odor, dry. 8" recovery.
4-6	35 80 47 27	12	-	Black FILL, tar paper, no odor. 20" recovery.
6-8	25 34 41 31	70	5	Black FILL, M-C sand, little gravel, wood in tip of split-spoon, strong odor, wet.
8-10	21 36 100/4"	90	14	Black FILL, F-M sand, little gravel, fiber material, strong odor, wet. 8" recovery.
10-12	45 54 49 29	600	50	0-6" Same as above. 6-18" Brown F-M SAND, strong petroleum odor, dry.
12-14	17 16 9 15	550	0	0-6" Black F-M SAND, little gravel, organic material. 6-12" Black F SAND & SILT with organic material.
17-19	4 6 10 10	20	0	Dk Grey SILT, some clay, wet. 16" recovery.
22-24	6 11 15 16	10	-	Same as above. 12" recovery.

Lithology

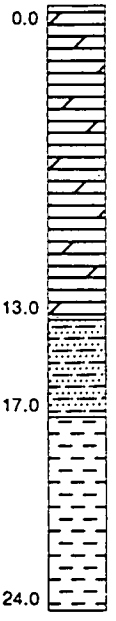

Sample 09-B7-01 collected from 0-2'
Sample 09-B7-04 collected from 6-8'
Sample 09-B7-06 collected from 10-12'

Test Boring: B-08
Site 09 - Allen Harbor Landfill
NCBC - Davisville
Boring Depth: 22 FEET

Drilling Company: D.L. Maher
Drillers: J. Graglia & B. Burns
TRC Inspector: T. McMorrow
Monitoring Well Coordinates:
N 197,601.71
E 522,806.23

Date Started: MAY 21, 1993
Date Completed: MAY 21, 1993
Depth to Water: 12 FEET
Ground Elevation: 11.33 FEET

Depth (feet)	Blow Counts		Field Measurements OVA (ppm)	HNu (ppm)	Soil Description
0-2	55	40	0	0	0-6" Brown F-M SAND, little gravel. 6-9" Concrete.
	38	25			9-16" Dk Brown F-M SAND, tr silt, dry, no odor.
2-3.5	48	4	-	-	No Recovery. Only 1.5' interval collected due to rods going off-line.
	22				
4-6	23	16	-	-	No Recovery.
	17	50/3"			
6-8	34	10	60	40	Black FILL, wood with F-M sand, tr gravel, strong odor, moist.
	7	11			12" recovery.
8-10	6	3	400	7	0-2" Black FILL, wood with F-M sand.
	4	7			2-24" Dk Brown PEAT
10-12	3	12	0	0	Dk Grey F-M SAND, little silt, organic material, wet at tip of split-spoon.
	21	30			
15-17	6	9	0	3	Grey SILT, little clay, wet, no odor.
	11	11			14" recovery.
20-22	7	14	0	0	Dk Grey SILT, very cohesive, moist, no odor.
	17	25			

Lithology

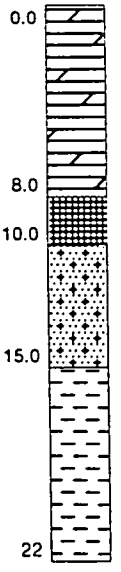

Sample 09-B8-01 collected from 0-2'
Sample 09-B8-04 collected from 6-8'
Sample 09-B8-06 collected from 10-12'

Monitoring Well: MW-5S
Site 09 - Allen Harbor Landfill
NCBC - Davisville
Well Depth: 15.5 FEET

Drilling Company: D.L. Maher
Drillers: J. Graglia & B. Burns
TRC Inspector: T. McMorrow
Monitoring Well Coordinates:
N 196,420.51
E 522,247.25

Date Started: JUNE 7, 1993
Date Completed: JUNE 7, 1993
Depth to Water: 8 Feet
Monitoring Well Elevations:
Top of PVC = 14.81
Ground Elevation = 12.71

Depth (feet)	Blow Counts		Field Measurements OVA (ppm)	HNu (ppm)	Soil Description
0-2	3 16	6 25	0	0	Brown FILL: F-M SAND, little gravel, moist, no odor, 10" recovery.
2-4	13 26	28 17	4	0	Black/brown FILL: F-M SAND, some debris (glass & plastic), moist, no odor, 20" recovery.
4-6	84	50/2	3	0	Dark brown FILL: F-M SAND, broken cobble fragments, moist, no odor, 13' recovery.
6-8	25 100/5	35	4	0	Brown FILL: F-M SAND, some debris (wood, wire, cloth), moist, no odor, 9" recovery.
8-10	100/4		20	2	Black FILL: F-M SAND, little gravel, strong Kerosene odor, moist, 4" recovery.
10-12	85	100/2	5	6	Same as above, strong Kerosene odor, 12" recovery.
13-15			9	-	Gray SILT, some F sand, wet, slight Kerosene odor, 14" recovery.

Lithology

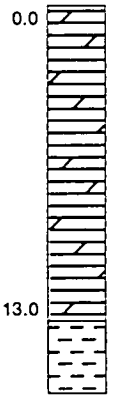

Monitoring Well Construction

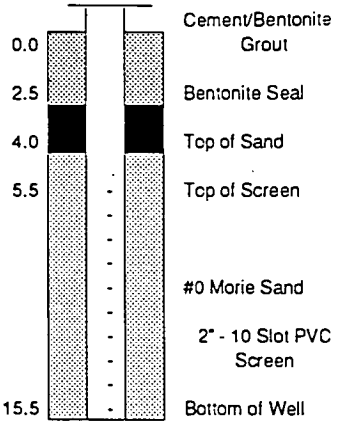

Sample 09-MW5-01 collected from 0-2'
Sample 09-MW5-04 collected from 6-8'
Sample 09-MW5-06 collected from 10-12'

Monitoring Well: MW-6S
Site 09 - Allen Harbor Landfill
NCBC - Davisville
Well Depth: 26.5 FEET

Drilling Company: D.L. Maher
Drillers: J. Graglia & B. Burns
TRC Inspector: T. McMorrow
Monitoring Well Coordinates:
N 196,621.45
E 522,451.95

Date Started: JUNE 10, 1993
Date Completed: JUNE 11, 1993
Depth to Water: 16 Feet
Monitoring Well Elevations:
Top of PVC = 24.13
Ground Elevation = 21.78

Depth (feet)	Blow Counts		Field Measurements OVA (ppm)	HNu (ppm)	Soil Description
0-2	2	5	0	0	Dk brown F-M SAND, tr gravel, dry, no odor,
	10	23			20" recovery.
2-4	40	44	0	0	Dk brown F SAND, little M sand, tr gravel, shell fragments
	60	67			moist, no odor, 16" recovery.
4-6	8	24	0	1	0-6" same as above. 6-14" Brown FILL: M-F SAND,
	22	25			little gravel, asphalt fragments, dry, no odor, 14" recovery.
6-8	15	6	0	0	Brown FILL: F-M SAND, little gravel, asphalt, wood,
	8	18			yellow material, moist, no odor, 18" recovery.
8-10	100/5"		0	0	Black FILL: F-M SAND, wood & metal debris, dry,
					no odor, 2" recovery.
10-12	31	69	0	0	No recovery.
12-14	27	66	2	0	Dk brown FILL: F-M SAND, wood & metal debris,
	100/5"				cobbles, moist, slight odor, 4" recovery.
14-16	50	23	18	13	Black FILL: F-M SAND, little gravel, debris (wire, rags,
	20	30			bricks), moist, slight odor, 18" recovery.
16-18	17	16	290	0	Black FILL: F-M SAND, little silt, debris (wire & cloth),
	15	14			wet, slight odor, 9" recovery.
18-20	27	20	-	-	No recovery.
	14	9			
20-22	13	40	7	0	Black FILL: F-M SAND, little silt & gravel, wet,
	100/5"				petroleum odor, 8" recovery.
22-24	38	90	12	0	0-6" Black M-C SAND, some gravel. 6-18' Black
	140/6"				F-M SAND, little silt, wet, no odor, 18" recovery.
24-26	10	7	4	0	Black FILL: SILT, some F sand, little gravel & debris
	8	12			(metal, glass, wire), wet, slight odor, 8'recovery.
26-28	4	4	20	0	Black FILL: F-M SAND, some silt, little gravel, trace
	1	1			debris (wire & metal fragments), wet, no odor,
					6" recovery.

Lithology

Monitoring Well Construction

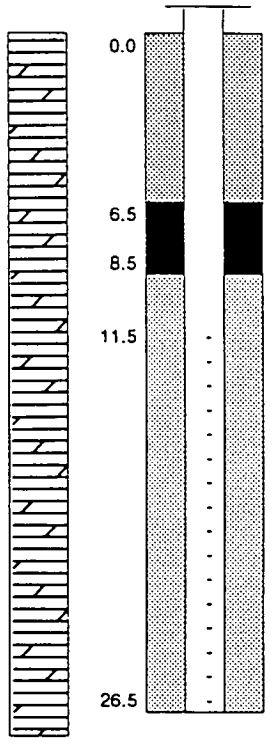

Sample 09-MW6-01 collected from 0-2'
Sample 09-MW6-08 collected from 14-16'

Monitoring Well: MW-6D
Site 09 - Allen Harbor Landfill
NCBC - Davisville
Well Depth: 67 FEET

Drilling Company: D.L. Maher
Drillers: J. Graglia & B. Burns
TRC Inspector: T. McMorrow
Monitoring Well Coordinates:
N 196,619.51
E 522,457.27

Date Started: JUNE 8, 1993
Date Completed: JUNE 10, 1993
Depth to Water: 16 Feet
Monitoring Well Elevations:
Top of PVC = 24.72
Ground Elevation = 22.37

Depth (feet)	Blow Counts		Field Measurements OVA (ppm)	HNu (ppm)	Soil Description
0-2	2	5	0	0	Dk brown F-M SAND, tr gravel, dry, no odor,
	10	23			20" recovery.
2-4	40	44	0	0	Dk brown F SAND, little M sand, tr gravel, shell fragments
	60	67			moist, no odor, 16" recovery.
4-6	8	24	0	1	0-6" same as above. 6-14" Brown FILL: M-F SAND,
	22	25			little gravel, asphalt fragments, dry, no odor, 14" recovery.
6-8	15	6	0	0	Brown FILL: F-M SAND, little gravel, asphalt, wood,
	8	18			yellow material, moist, no odor, 18" recovery.
8-10	100/5"		0	0	Black FILL: F-M SAND, wood & metal debris, dry,
					no odor, 2" recovery.
10-12	31	69	-	-	No recovery.
12-14	27	66	2	0	Dk brown FILL: F-M SAND, wood & metal debris, cobbles,
	100/5"				moist, slight odor, 4" recovery.
14-16	50	23	18	13	Black FILL: F-M SAND, little gravel, debris (wire, rags, bricks),
	20	30			moist, slight odor, 18" recovery.
16-18	17	16	290	0	Black FILL: F-M SAND, little silt, debris (wire & cloth),
	15	14			wet, slight odor, 9" recovery.
18-20	27	20			No recovery.
	14	9			
20-22	13	40	7	0	Black FILL: F-M SAND, little silt & gravel, wet,
	100/5"				petroleum odor, 8" recovery.
22-24	38	90	12	0	0-6" Black M-C SAND, some gravel. 6-18' Black
	140/6"				F-M SAND, little silt, wet, no odor, 18" recovery.
24-26	10	7	4	0	Black FILL: SILT, some F sand, little gravel & debris
	8	12			(metal, glass, wire), wet, slight odor, 8'recovery.
26-28	4	4	20	0	Black FILL: F-M SAND, some silt, little gravel, trace
	1	1			debris (wire & metal fragments), wet, no odor, 6" recovery.
29-31	7	8	300	0	Gray F SAND, little silt, wet, no odor, 14" recovery.
	5	6			
34-36	2	1	10	0	Gray SILT, little F sand, wet, no odor, 6" recovery.
	2	3			
39-41	2	4	10	0	Gray SILT, tr F sand, wet, no odor, 12" recovery.
	5	4			
44-46	3	2	0.5	0	Same as above, 21" recovery.
	2	3			
49-51	3	3	0	0	Same as above, 11" recovery.
	4	5			
54-56	3	3	0	0	Same as above, 16" recovery.
	3	6			
59-61	6	3	0	0	Same as above, 17" recovery.
	3	8			

Lithology

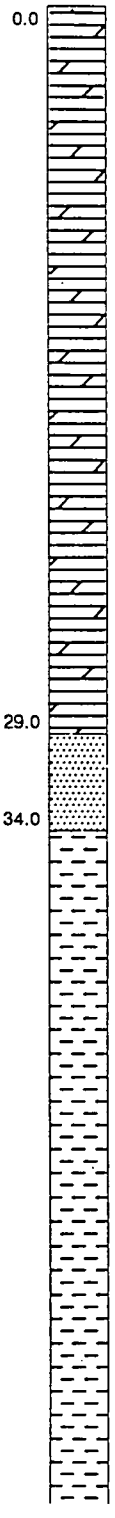

Monitoring Well Construction

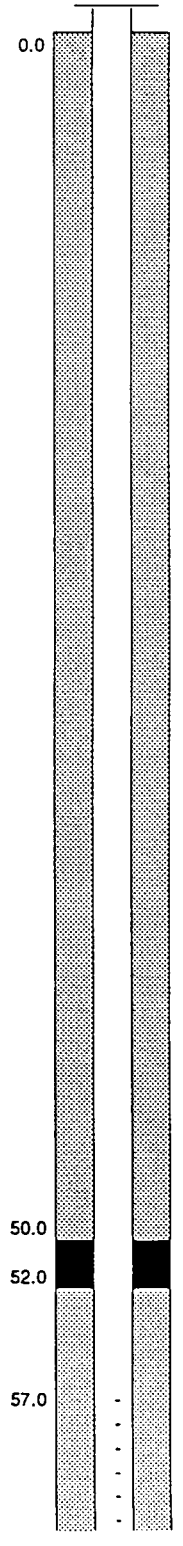

Monitoring Well: MW-6D (continued)
Site 09 - Allen Harbor Landfill
NCBC - Davisville
Well Depth: 67 FEET

Drilling Company: D.L. Maher
Drillers: J. Graglia & B. Burns
TRC Inspector: T. McMorrow
Monitoring Well Coordinates:
N 196,619.51
E 522,457.27

Date Started: JUNE 8, 1993
Date Completed: JUNE 10, 1993
Depth to Water: 16 Feet
Monitoring Well Elevations:
Top of PVC = 24.72
Ground Elevation = 22.37

Depth (feet)	Blow Counts	Field Measurements OVA (ppm)	HNu (ppm)	Soil Description	Lithology	Monitoring Well Construction
64-66	23 23 20 32	0	0	Gray M-C SAND, some gravel, little silt, wet, no odor, 10" recovery.	64.0	2" - 10 Slot PVC Screen
67-69	100/5"			Bedrock	67.0	67.0 Bottom of Well
68.2-78.7 5' Core Run #1 2.8' recovery				0.0-0.5' Light gray, fine-medium grained META SANDSTONE GNEISS, massive and competent. Mineralogy: primarily quartz, plagioclase, biotite and muscovite. 0.5-1.6' Dark gray SCHIST, brittle and shattered. Mineralogy: biotite, muscovite, horneblende. 1.6-7.1' Light gray , fine-medium grained META SANDSTONE GNEISS, massive, competent. Mineralogy same as 0-0.5'. Few iron stained fractures dipping from 10-60 degrees.		Bentonite Chips
5' Core Run #1 4.3' recovery					78.7	Bottom of Core

Monitoring Well: MW-7S
Site 09 - Allen Harbor Landfill
NCBC - Davisville
Well Depth: 24.5 FEET

Drilling Company: D.L. Maher
Drillers: J. Graglia & B. Burns
TRC Inspector: T. McMorrow
Monitoring Well Coordinates:
N 196,794.42
E 522,590.30

Date Started: MAY 27, 1993
Date Completed: MAY 28, 1993
Depth to Water: 15 Feet
Monitoring Well Elevations:
Top of PVC = 21.40
Ground Elevation = 19.47

Depth (feet)	Blow Counts		Field Measurements OVA (ppm)	HNu (ppm)	Soil Description
0-2	4	100/3"	4	0	0-6" Black M-C SAND, tr. gravel.
					6-12" Brown F-M SAND, little gravel, no odor.
2-4	6	6	>1000	0	0-4" Black F-M SAND, little gravel.
	6	6			4-18" Lt brown M-C SAND, some gravel, dry, no odor.
4-6	7	8	30	0	0-6" Lt. brown M-C SAND, little gravel.
	9	13			6-12" Lt gray M-C SAND, little gravel, dry, no odor.
6-8	31	76	50	8	0-6" Brown F-M SAND, little gravel.
	70	80			6-12" FILL, paper, plastic, wood, metal.
					12-18" Same as 0-6" interval.
9-11	49	40	800	4	0-6" FILL, garbage, paper, glass, sand, wood, rock fragments,
	46	35			dry garbage odor.
11-13	18	45	120	0	Black FILL, some f-m sand, wood fragments, paper, metal,
	35	57			rock in tip, slight odor, dry, recovery = 14".
13-15	42	50			No recovery, cloth stuck in basket of split spoon, wet.
	48	32			
15-17	16	10	1000	1	Black F-M SAND, tr. gravel, no odor, wet,
	9	9			16" recovery.
20-22	5	5	300	0	Brown M-C SAND, wet.
	8	10			24" recovery
24-26	10	10	25	0	0-8" Gray SILT, little f sand.
	12	18			8-12" Gray F-M SAND, wet.

Lithology

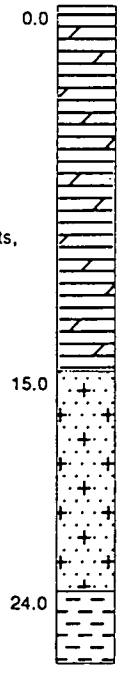

Monitoring Well Construction

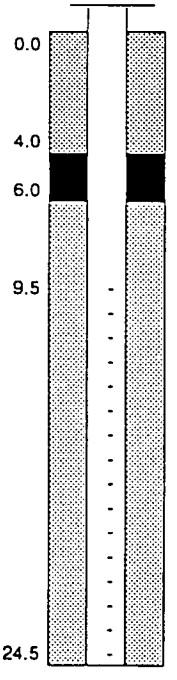

Cement/Bentonite Grout
Bentonite Seal
Top of Sand
Top of Screen
#0 Morie Sand
2" - 10 Slot PVC Screen
Bottom of Well

Sample 09-MW7-02 collected from 2-4'
Sample 09-MW7-06 collected from 10-12'

Monitoring Well: MW-7D
Site 09 - Allen Harbor Landfill
NCBC - Davisville
Well Depth: 54 FEET

Drilling Company: D.L. Maher
Drillers: J. Graglia & B. Burns
TRC Inspector: T. McMorrow
Monitoring Well Coordinates:
N 196,790.27
E 522,584.88

Date Started: JUNE 4, 1993
Date Completed: JUNE 4, 1993
Depth to Water: 15 Feet
Monitoring Well Elevations:
Top of PVC = 21.39
Ground Elevation = 19.35

Depth (feet)	Blow Counts		Field Measurements OVA (ppm)	HNu (ppm)	Soil Description
0-2	4	100/3"	4	0	0-6" Black M-C SAND, tr. gravel.
					6-12" Brown F-M SAND, little gravel, no odor.
2-4	6	6	>1000	0	0-4" Black F-M SAND, little gravel.
	6	6			4-18" Lt Brown M-C SAND, some gravel, dry, no odor.
4-6	7	8	30	0	0-6" Lt. Brown M-C SAND, little gravel.
	9	13			6-12" Lt gray M-C SAND, little gravel, dry, on odor.
6-8	31	76	50	8	0-6" Brown F-M SAND, little gravel.
	70	80			6-12" FILL, paper, plastic, wood, metal.
					12-18 Same as 0-6" interval, garbage odor, dry.
9-11	49	40	800	4	0-6" FILL, garbage, paper, glass.
	46	35			6-24" Black FILL, sand, wood, glass, dry, garbage odor.
11-13	18	45	120	0	Same as 6-24" interval above, rock in tip, slight odor, dry.
	35	57			14" recovery.
13-15	42	50			No recovery, cloth stuck in basket of split spoon, wet.
	48	32			
15-17	16	10	1000	1	Black F-M SAND, tr gravel, no odor, wet.
	9	9			16" recovery.
20-22	5	5	300	0	Brown M-C SAND, wet.
	8	10			12" recovery.
24-26	10	10	25	0	0-8" Gray SILT, little f sand.
	12	18			8-12" Gray F-M Sand, wet.
					12" recovery.
29-31	7	8	70	-	Gray M-C SAND, some silt & silt layers, wet, TCE odor.
	8	8			15" recovery.
34-36	8	2	20	-	Gray SILT, tr F sand, wet, TCE odor.
	4	3			6" recovery.
39-41	2	1	90	-	Gray SILT, tr f sand, wet, TCE odor.
	2	2			14" recovery.
44-46	3	2	40	-	Gray stiff SILT, tr f sand, little TCE odor.
	2	3			20" recovery.
49-51	6	2	10	-	Same as above, weak TCE odor.
	2	4			10" recovery.
54-56	100/3"		-	-	No recovery, augered into bedrock at 54.5'.

Sample 09-MW7-23 collected from 44-46'

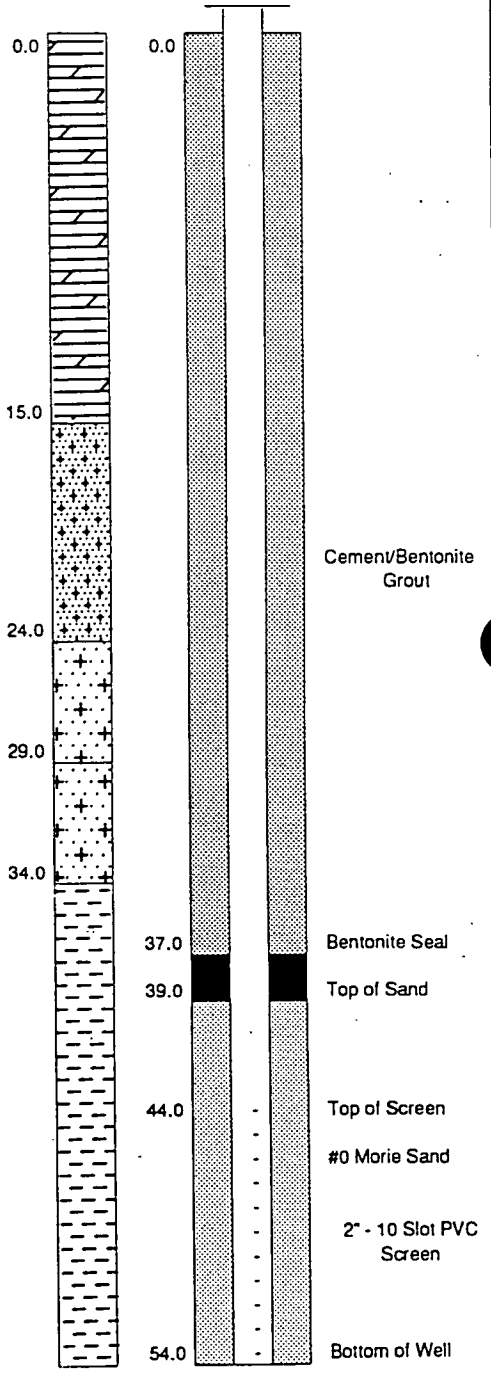

Monitoring Well: MW-8S
Site 09 - Allen Harbor Landfill
NCBC - Davisville
Well Depth: 22.5 FEET

Drilling Company: D.L. Maher
Drillers: J. Graglia & B. Burns
TRC Inspector: T. McMorrow
Monitoring Well Coordinates:
N 196,317.98
E 522,557.70

Date Started: JUNE 2, 1993
Date Completed: JUNE 3, 1993
Depth to Water: 12 Feet
Monitoring Well Elevations:
Top of PVC = 15.78
Ground Elevation = 13.44

Depth (feet)	Blow Counts		Field Measurements OVA (ppm)	HNu (ppm)	Soil Description
0-2	6	18	0	0	Brown F-M SAND, little gravel, asphalt fragments, dry,
	22	29			no odor. 18" recovery.
2-4	28	17	0	0	Same as above, no asphalt fragments.
	18	15			16" recovery.
4-6	16	17	0	0	Brown F-M SAND, little gravel, glass & plastic debris,
	8	4			dry, no odor. 4" recovery.
6-8	7	15	0	8	Dk. Brown F-M SAND, FILL, wire, glass, little "white paste"
	25	22			and "orange paste", moist, no odor. 20" recovery.
8-10	24	38	2.5	0	Brown/black FILL, M-F SAND, some black & white mix
	100	78			material, moist, no odor. 6" recovery.
10-12	38	14	35	0	0-6" Brown FILL, F-M SAND, little metal & glass.
	10	8			6-8" Black FILL, F-M SAND, tr. wood & wire, moist, no odor.
12-14	18	19	6	0	Black FILL, F-M SAND, little c sand, tr gravel, wire, wet,
	19	20			no odor. 16" recovery.
14-16	14	6	15	0	Black FILL, M-C SAND, little gravel, wire debris, wet, no odor.
	3	3			6" recovery.
16-18	6	4	80	0	0-8" Same as above, no wire.
	3	3			8-14" Gray F SAND, little silt, wet, no odor.
					14" recovery.
21-23	5	4	12	0	Gray SILT, tr f sand, wet, no odor.
	4	5			24" recovery.

Lithology

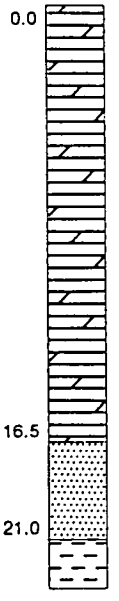

Monitoring Well Construction

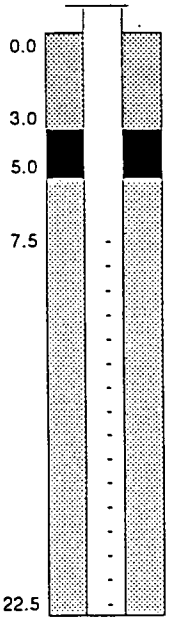

Cement/Bentonite Grout
Bentonite Seal
Top of Sand
Top of Screen
#0 Morie Sand
2" - 10 Slot PVC Screen
Bottom of Well

Sample 09-MW8-01 collected from 0-2'
Sample 09-MW8-04 collected from 6-8'
Sample 09-MW8-06 collected from 10-12'

Monitoring Well: MW-8D
Site 09 - Allen Harbor Landfill
NCBC - Davisville
Well Depth: 65 FEET

Drilling Company: D.L. Maher
Drillers: J. Graglia & B. Burns
TRC Inspector: T. McMorrow
Monitoring Well Coordinates:
N 196,313.05
E 522,554.13

Date Started: JUNE 1, 1993
Date Completed: JUNE 2, 1993
Depth to Water: 12 Feet
Monitoring Well Elevations:
Top of PVC = 15.85
Ground Elevation = 13.43

Depth (feet)	Blow Counts		Field Measurements OVA (ppm)	HNu (ppm)	Soil Description
0-2	6	18	0	0	Brown F-M SAND, little gravel, asphalt fragments, dry,
	22	29			no odor, 18" recovery.
2-4	28	17	0	0	Same as above, no asphalt fragments, 16" recovery.
	18	15			
4-6	16	17	0	0	Brown F-M SAND, little gravel, glass & plastic debris,
	8	4			dry, no odor, 4" recovery.
6-8	7	15	0	8	Dk. Brown F-M SAND, FILL: wire, glass, little "white paste",
	25	22			and "orange paste", moist, no odor, 20" recovery.
8-10	24	38	2.5	0	Brown-black FILL: M-F SAND, some black & white mix
	100	78			material, moist, no odor, 6" recovery.
10-12	38	14	35	0	0-6" Brown FILL: F-M SAND, little metal & glass. 6-8"
	10	8			Black FILL: F-M SAND, tr. wood & wire, moist, no odor.
12-14	18	19	6	0	Black FILL: F-M SAND, little C sand, tr. gravel, wire, wet,
	19	20			no odor, 16" recovery.
14-16	14	6	15	0	Black FILL: M-C SAND, little gravel, wire debris,
	3	3			wet, no odor, 6" recovery.
16-18	6	4	80	0	0-8" Same as above, no wire. 8-14" Gray F SAND
	3	3			little silt, wet, no odor.
					14" recovery.
21-23	5	4	12	0	Gray SILT, tr. f sand, wet, no odor, 24" recovery.
	4	5			
26-28	62	2	5	0	Same as above interval.
	2	5			16" recovery.
31-33	3	3	5	0	Same as above interval.
	2	3			24" recovery.
36-38	1	1	0	0	Gray SILT, little to tr. F sand, wet, no odor.
	2	2			24" recovery.
41-43			0	0	Gray SILT and F SAND, wet, no odor, 18" recovery.
					18" recovery.
46-48	4	4	2	0	Gray F-M SAND, little - tr. silt, wet, no odor, 14" recovery.
	6	8			14" recovery.
51-53	3	4	6	0	Gray F-M SAND, wet, no odor, 16" recovery.
	4	16			16" recovery.
56-58	3	3	60	0	Same as above interval.
	8	10			14" recovery.
61-63	62	40	2	0	Gray M-C SAND, little F sand, little gravel, wet, no odor.
	26	23			10" recovery.

Lithology

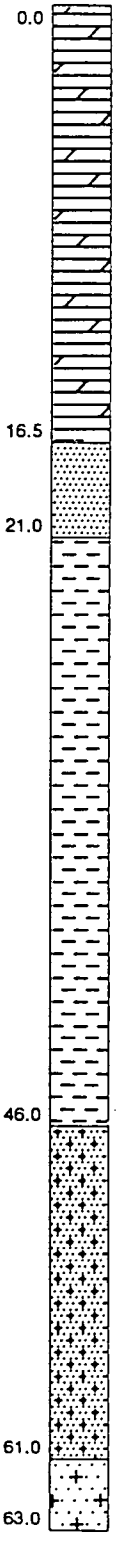

Monitoring Well Construction

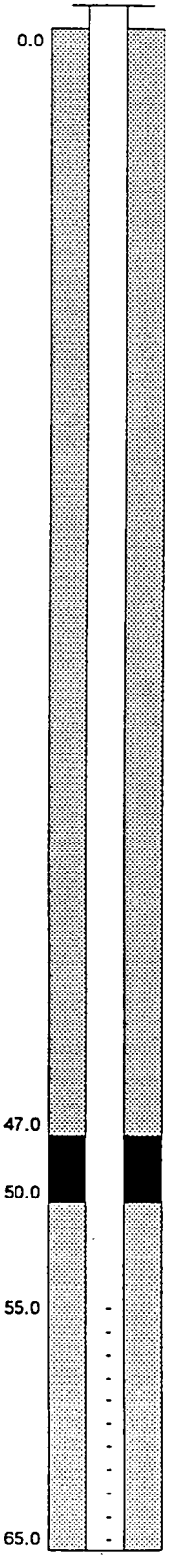

Monitoring Well: MW-9S
Site 09 - Allen Harbor Landfill
NCBC - Davisville
Well Depth: 25 FEET

Drilling Company: D.L. Maher
Drillers: J. Graglia & B. Burns
TRC Inspector: T. McMorrow
Monitoring Well Coordinates:
N 196,544.12
E 522,741.66

Date Started: JUNE 17, 1993
Date Completed: JUNE 17, 1993
Depth to Water: 15 Feet
Monitoring Well Elevations:
Top of PVC = 20.81
Ground Elevation = 18.47

Depth (feet)	Blow Counts		Field Measurements OVA (ppm)	HNu (ppm)	Soil Description
0-2	2	14	0	0	Brown F-M SAND, some gravel, dry, no odor, 20" recovery.
	18	27			
2-4	47	50/1"	0	0	Same as above, moist, gray rock fragments, 6" recovery.
4-6	12	18	-	-	No recovery.
	12	15			
6-8	14	34	0	0	Brown FILL: F-M SAND, little debris (glass & metal),
	57	46			moist, no odor, 9" recovery.
8-10	2	23	2	0	Dk brown FILL: F-M SAND, little debris (wood & metal),
	100/2"				tr gravel, moist, no odor, 10" recovery.
10-12	5	9	15	0	Dk brown FILL: F-M SAND, some debris (wood & metal),
	10	33			little gray rock, moist, no odor, 12" recovery.
12-14	26	32	2	0	Gray FILL: F-M SAND, some wood, little rock fragments,
	52	50			moist, no odor, 10" recovery.
14-16	11	5	45	0	0-5" Dk brown FILL: F-M SAND, some debris (wood & metal).
	12	18			5-9" Black FILL: M SAND, some debris, wet, slight odor.
16-18	12	14	-	-	No recovery.
	7	4			
19-21	17	21	20	0	Black FILL: M-C SAND, some F sand, some debris (wire),
	12	12			wet, no odor, 1" recovery.
21-23	11	23	24	0	0-3" Brown PEAT.
	15	17			3-14" Brown F-M SAND.
					14-18" Gray SILT, tr f sand, wet, organic odor, 18" recovery.
24-26	3	12	34	0	Gray SILT, wet, no dor, 6" recovery.
	17	17			

Lithology

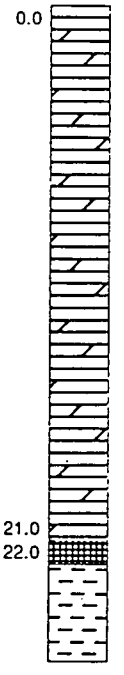

Monitoring Well Construction

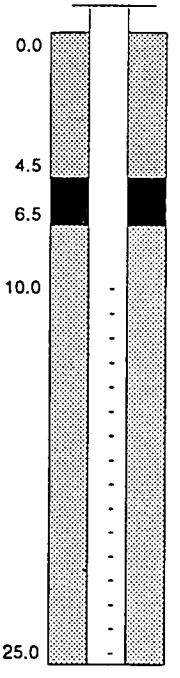

Cement/Bentonite Grout
Bentonite Seal
Top of Sand
Top of Screen
#0 Morie Sand
2" - 10 Slot PVC Screen
Bottom of Well

Sample 09-MW9-01 collected from 0-2".
Sample 09-MW9-08 collected from 14-16".

Monitoring Well: MW-9D
Site 09 - Allen Harbor Landfill
NCBC - Davisville
Well Depth: 66 FEET

Drilling Company: D.L. Maher
Drillers: J. Graglia & B. Burns
TRC Inspector: T. McMorrow
Monitoring Well Coordinates:
N 196,546.59
E 522,736.19

Date Started: JUNE 11, 1993
Date Completed: JUNE 16, 1993
Depth to Water: 15 Feet
Monitoring Well Elevations:
Top of PVC = 20.78
Ground Elevation = 18.43

Depth (feet)	Blow Counts		Field Measurements OVA (ppm)	HNu (ppm)	Soil Description
0-2	2 18	14 27	0	0	Brown F-M SAND, some gravel, dry, no odor, 20" recovery.
2-4	47	50/1"	0	0	Same as above, moist, gray rock fragments, 6" recovery.
4-6	12 12	18 15	-	-	No recovery.
6-8	14 57	34 46	0	0	Brown FILL: F-M SAND, little debris (glass & metal), moist, no odor, 9" recovery.
8-10	2 100/2"	23	2	0	Dk brown FILL: F-M SAND, little debris (wood & metal), tr gravel, moist, no odor, 10" recovery.
10-12	5 10	9 33	15	0	Dk brown FILL: F-M SAND, some debris (wood & metal), little gray rock, moist, no odor, 12" recovery.
12-14	26 52	32 50	2	0	Gray FILL: F-M SAND, some wood, little rock fragments, moist, no odor, 10" recovery.
14-16	11 12	5 18	45	0	0-5" Dk brown FILL: F-M SAND, some debris (wood & metal). 5-9" Black FILL: M SAND, some debris, wet, slight odor.
16-18	12 7	14 4	-	-	No recovery.
19-21	17 12	21 12	20	0	Black FILL: M-C SAND, some F sand, some debris (wire), wet, no odor, 1" recovery.
21-23	11 15	23 17	24	0	0-3" Brown PEAT. 3-14" Brown F-M SAND. 14-18" Gray SILT, tr F sand, wet, organic odor, 18" recovery.
24-26	3 17	12 17	34	0	Gray SILT, wet, no odor, 6" recovery.
29-31	13 14	22 13	10	0	Same as above, some brick fragments, 12" recovery.
34-36	4 20	8 23	22	0	Same as above, 18" recovery.
39-41	10 9	10 10	44	0	Same as above, 18" recovery.
44-46	4 2	2 1	12	1	Same as above, less tight, 21" recovery.
49-51	1 3	2 5	18	0	Same as above, 20" recovery.
54-56	1 1	1 3	1	0	Same as above, 20" recovery.
59-61	2 3	4 7	0	0	Same as above, 13" recovery.
64-66	2 2	2 3	0	0	Gray SILT, tr C sand & F gravel, wet, no odor, 3" recovery.
					Auger refusal @ 65.5 feet.

Monitoring Well Construction

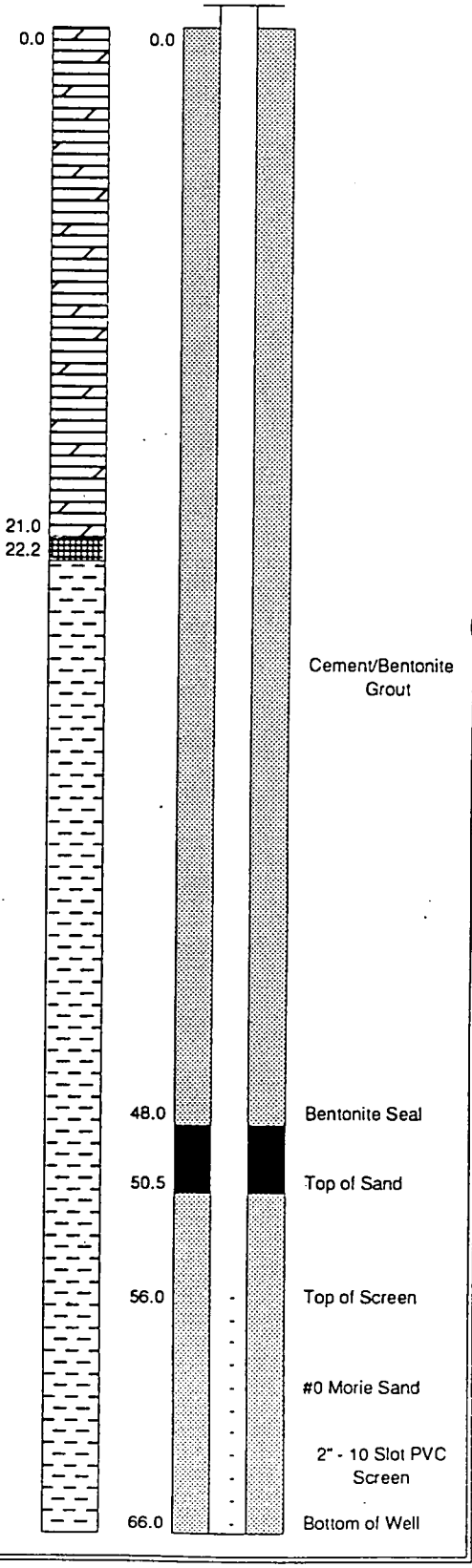

Monitoring Well: MW-10S
Site 09 - Allen Harbor Landfill
NCBC - Davisville
Well Depth: 28 FEET

Drilling Company: D.L. Maher
Drillers: J. Graglia & B. Burns
TRC Inspector: T. McMorrow
Monitoring Well Coordinates:
N 197,172.07
E 522,765.15

Date Started: JUNE 3, 1993
Date Completed: JUNE 3, 1993
Depth to Water: 18 Feet
Monitoring Well Elevations:
Top of PVC = 21.37
Ground Elevation = 18.80

Depth (feet)	Blow Counts		Field Measurements OVA (ppm)	HNu (ppm)	Soil Description
0-2	14	100/3"	1	0	Dk brown, F-M SAND, little gravel, dry, no odor. Recovery = 4"
2-4	6	9	0	0	Dk brown, F-M SAND, little gravel, pieces of oxidized
	5	10			metal & glass, dry, no odor. Recovery = 18"
4-6	15	11	0	0	Dk brown, F-M SAND, little gravel, metal wire in tip of
	8	8			split-spoon, dry, no odor. Recovery = 3"
6-8	8	5	2	0	Black, F-M SAND, little gravel, dry, no odor
	3	4			Recovery = 16"
8-10	5	5	0	0	0-8" Same as above. 8-14" Brown M-C SAND, little
	9	11			gravel, wood & glass fragments, dry, no odor.
10-12	5	5	0	0	0-4" Black, F-M SAND, little gravel. 4-18" Brown/
	10	17			Black F-M SAND, little gravel, wood, glass & metal.
12-14	20	24	15	5	0-4" Brown F SAND, trace silt, trace fill debris, moist.
	15	17			4-14" Black F-M SAND, trace silt & gravel, metal.
14-16	17	18	15	0	0-18" Brown F SAND, trace silt & gravel.
	14	15			18-20" Black M-C SAND, trace gravel, metal, wood, & glass.
16-18	8	14	70	0	Dk brown/black F SAND, little gravel, trace silt, moist,
	17	16			glass & wood fragments.
18-20	9	16	110	0	0-18" Black F SAND, little silt, trace gravel, wood, wet.
	17	18			18-20" Brown PEAT, wet.
20-22	3	6	7	0	Gray F SAND, little silt, wet, slight odor. Recovery = 8".
	9	15			
22-24	6	12	10	0	Gray SILT, tr clay, moist, no odor. Recovery = 14".
	7	16			
24-26	5	5	30	0	Same as above. Recovery = 8".
	10	20			
26-28	15	12	5	0	Same as above. Recovery = 16".
	16	20			
28-30	25	20	5	-	Same as above. Recovery = 14".
	16	20			

Lithology

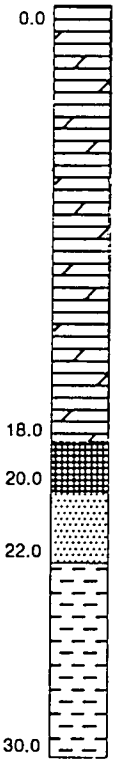

Monitoring Well Construction

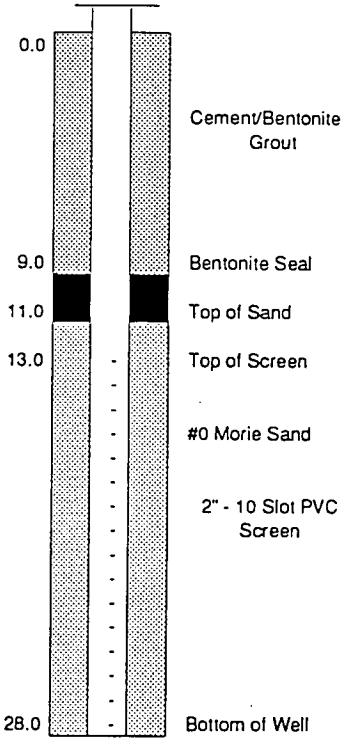

Sample 09-MW10-01 collected from 0-2'
Sample 09-MW10-09 collected from 16-18'.

Monitoring Well: MW-10D
Site 09 - Allen Harbor Landfill
NCBC - Davisville
Well Depth: 77 FEET

Drilling Company: D.L. Maher
Drillers: J. Graglia & B. Burns
TRC Inspector: T. McMorrow
Monitoring Well Coordinates:
N 197,166.77
E 522,764.24

Date Started: MAY 24, 1993
Date Completed: MAY 26, 1993
Depth to Water: 18 Feet
Monitoring Well Elevations:
Top of PVC = 21.48
Ground Elevation = 19.25

Depth (feet)	Blow Counts		Field Measurements OVA (ppm)	HNu (ppm)	Soil Description
0-2	14	100/3"	1	0	Dk brown F-M SAND, little gravel, dry, no odor Recovery = 4"
2-4	6	9	0	0	Dk brown F-M SAND, little gravel, pieces of oxidized metal & glass, dry, no odor. Recovery = 18"
	5	10			
4-6	15	11	0	0	Dk brown F-M SAND, little gravel, metal wire in tip of split-spoon, dry, no odor. Recovery = 3"
	8	8			
6-8	8	5	2	0	Black F-M SAND, little gravel, dry, no odor Recovery = 16"
	3	4			
8-10	5	5	0	0	0-8" Same as above. 8-14" Brown M-C SAND, little gravel, wood & glass fragments, dry, no odor
	9	11			
10-12	5	5	0	0	0-4" Black F-M SAND, little gravel. 4-18" Brown/ Black F-M SAND, little gravel, wood, glass & metal.
	10	17			
12-14	20	24	15	5	0-4" Brown F SAND, trace silt, trace fill debris, moist. 4-14" Black F-M SAND, trace silt & gravel, metal & wood.
	15	17			
14-16	17	18	15	0	0-18" Brown F SAND, trace silt & gravel. 18-20" Black M-C SAND, trace gravel, metal, wood, & glass.
	14	15			
16-18	8	14	70	0	Dk brown/black F SAND, little gravel, trace silt, moist, glass & wood fragments.
	17	16			
18-20	9	16	110	0	0-18" Black F SAND, little silt, trace gravel, wood, wet 18-20" Brown PEAT, wet.
	17	18			
20-22	3	6	7	0	Gray F. SAND, little silt, wet, slight odor. Recovery = 8".
	9	15			
22-24	6	12	10	0	Gray SILT, tr clay, moist, no odor. Recovery = 14".
	7	16			
24-26	5	5	30	0	Same as above. Recovery = 8".
	10	20			
26-28	15	12	5	0	Same as above. Recovery = 16".
	16	20			
28-30	25	20	5	•	Same as above. Recovery = 14".
	16	20			
30-32	10	15	4	•	Grey SILT, tr f sand, moist, no odor. Recovery = 18".
	20	30			
32-34	10	12	50	•	Grey SILT, little f sand, wet, no odor. Recovery = 14".
	12	14			
34-36	7	12	70	•	Grey SILT, tr f sand, moist, no odor. Recovery = 18".
	9	10			
36-38	7	10	60	0	Grey SILT, tr f sand. Recovery = 14".
	11	11			
38-40	4	5	30	0	Grey SILT, tr clay, tr f sand, less cohesive than previous spoons. Recovery = 16".
	5	5			
40-42	3	2	50	0	Same as above. Recovery = 12".
	2	3			
42-44	2	1	10	0	Same as above. Recovery = 16".
	1	2			
44-46	4	2	20	0	Same as above. Recovery = 18".
	1	1			
46-48	2	1	10	0	Same as above. Recovery = 12".
	3	2			
48-50	6	4	10	0	Same as above. Recovery = 14".
	3	3			
50-52	7	4	3	0	Same as above. Recovery = 8".
	2	3			
52-54	3	3	1	0	Same as above. Recovery = 20".
	3	4			
54-56	6	4	0	0	Same as above. Recovery = 18".
	3	5			
56-58	5	3	0	0	Same as above. Recovery = 18".
	3	4			
58-60	5	6	0	0	Gray SILT, tr clay, tr f sand. Recovery = 16".
	5	4			
60-62	3	3	0	0	Same as above. Recovery = 4".
	3	4			
62-64	3	2	0	0	Same as above. Recovery = 20".
	3	4			

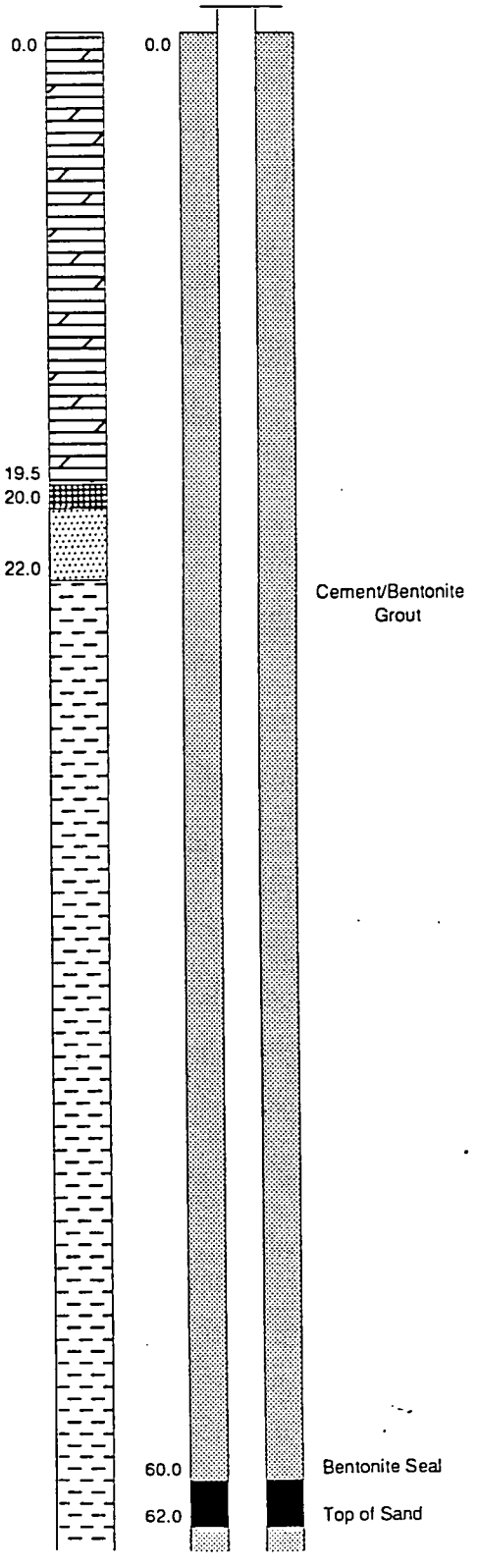

Monitoring Well: MW-10D (continued)
Site 09 - Allen Harbor Landfill
NCBC - Davisville
Well Depth: 77 FEET

Drilling Company: D.L. Maher
Drillers: J. Graglia & B. Burns
TRC Inspector: T. McMorrow
Monitoring Well Coordinates:
N 197,166.77
E 522,764.24

Date Started: MAY 24, 1993
Date Completed: MAY 26, 1993
Depth to Water: 18 Feet
Monitoring Well Elevations:
Top of PVC = 21.48
Ground Elevation = 19.25

Depth (feet)	Blow Counts		Field Measurements OVA (ppm)	HNu (ppm)	Soil Description
64-66	8 5	5 4	0	0	Gray SILT, little to trace f sand. Recovery = 16".
70-72	3 4	4 4	0	0	Same as above. Recovery = 14".
73-75	30 19	25 15	0	0	Gray F. SAND, little silt, little gravel. Recovery = 4".
77-79	60/2"				Gray SHALE in nose of split spoon. No Recovery.

Lithology

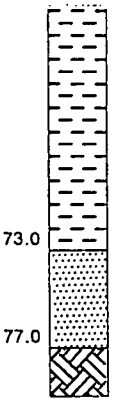

Monitoring Well Construction

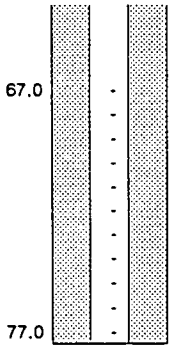

Top of Screen
#0 Morie Sand
2" - 10 Slot PVC Screen
Bottom of Well

Monitoring Well: MW-11S
Site 09 - Allen Harbor Landfill
NCBC - Davisville
Well Depth: 21 FEET

Drilling Company: D.L. Maher
Drillers: J. Graglia & B. Burns
TRC Inspector: T. McMorrow
Monitoring Well Coordinates:
N 197,471.38
E 522,783.02

Date Started: JUNE 8, 1993
Date Completed: JUNE 8, 1993
Depth to Water: 9.5 Feet
Monitoring Well Elevations:
Top of PVC = 14.63
Ground Elevation = 12.35

Depth (feet)	Blow Counts		Field Measurements OVA (ppm)	HNu (ppm)	Soil Description
0-2	3	19	0	0	Dk brown FILL: F SAND, tr silt, debris (glass, metal), dry,
	100/4"				no odor, 12" recovery.
2-4	6	3	0	0	Black FILL: F SAND, little silt & gravel, debris (metal,
	16	9			glass, white powder), dry, no odor, 8" recovery.
4-6	28	18	0	0	Dk brown FILL: F SAND, tr silt & gravel, debris (glass,
					wood, brick), dry, no odor, 14" recovery.
6-8	18	10	1	8	Dk brown FILL: F SAND, tr silt & gravel, debris (wire, metal,
	14	8			wood, glass), moist, no odor, 8" recovery.
8-10	5	6	320	20	0-8" Dk brown FILL: same as above, strong trash odor.
	7	10			8-20" Br/gray F SAND, tr silt, moist, slight odor.
10-12	6	16	30	0	0-4" Black PEAT, wet, slight odor. 4-22" Black F-M
	21	20			SAND, wet, no odor, 22" recovery.
15-17	12	10	0	0	Gray SILT, tr F sand, wet, no odor, 12" recovery.
	11	12			
17-19					Shelby tube collected, down presure 500 psi.

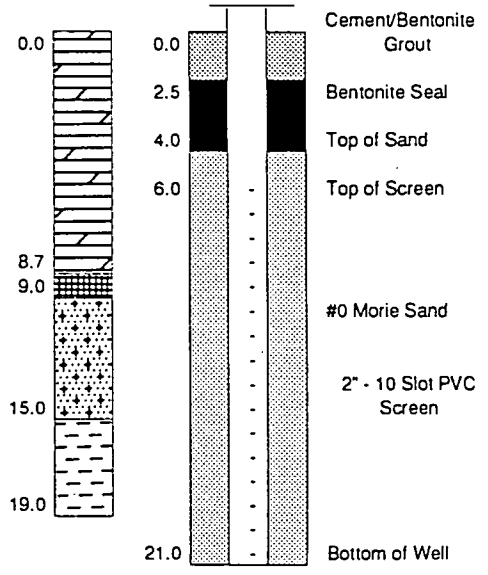

Sample 09-MW11-01 collected from 0-2'
Sample 09-MW11-05 collected from 8-10'

Monitoring Well: MW-12D
Site 09 - Allen Harbor Landfill
NCBC - Davisville
Well Depth: 67.5 FEET

Drilling Company: D.L. Maher
Drillers: Bill Putnam
TRC Inspector: J. Smith
Monitoring Well Coordinates:
N 197,457.50
E 522,609.80

Date Started: AUGUST 9, 1993
Date Completed: AUGUST 10, 1993
Depth to Water: 5.5 Feet
Monitoring Well Elevations:
Top of PVC = 13.10
Ground Elevation = 13.53

Depth (feet)	Blow Counts	Field Measurements OVA (ppm)	HNu (ppm)	Soil Description
0-2	14 9 7 8	0	–	0-20" Brown F SAND, little medium sand & silt, trace gravel, no odor, moist
2-4	7 5 6 5	0	–	0-20" Brown F SAND, little medium sand & silt, trace gravel, marsh odor, moist
4-6	5 5 4 5	0	–	0-20" Brown F SAND, little med sand & silt, trace gravel, marsh odor, wet
9-11	3 4 4 4	0	–	0-18" Gray/brown F SAND & SILT, little med sand, trace clay, no odor, wet.
14-16	3 3 2 2	0	–	0-18" Gray/black SILT, little clay, trace fine sand, no odor, wet.
19-21	8 10 10 17	0	–	0-20" Gray/black SILT, trace fine sand & clay, salt water odor, moist.
24-26	6 7 14 22	0	–	0-20" Gray/black SILT, little fine sand, trace clay, no odor, moist.
29-31	10 10 20 10	0	–	0-22" Gray/black SILT, trace fine sand & clay, no odor, moist.
34-36	3 2 1 1	0	–	0-20". Gray/black SILT, no odor, wet.
39-41	2 3 3 3	0	–	0-22" Gray/black SILT, little clay, no odor, wet.
44-46	3 2 2 4	0	–	0-22" Gray/black SILT, little clay, no odor, wet.
49-51	3 1 2 3	0	–	0-22" Gray/black SILT, little clay, no odor, wet.
54-56	2 1 2 4	0	–	0-22" Gray/black SILT, little clay, no odor, wet.
59-61	3 2 2 4	0	–	0-20" Gray/black SILT, little clay, no odor, wet.

Lithology

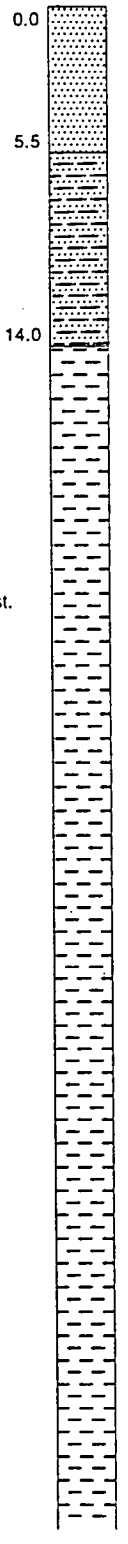

Monitoring Well Construction

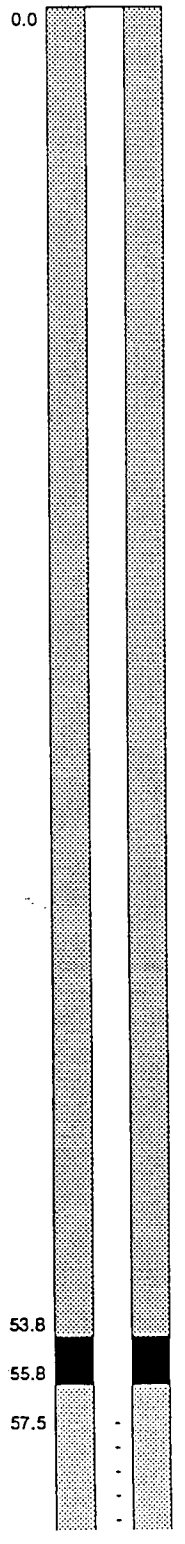

Curb box

Cement/Bentonite

Top of Bentonite

Top of Sand

Top of Screen

#0 Morie Sand

Monitoring Well: MW-12D (continued)
Site 09 - Allen Harbor Landfill
NCBC - Davisville
Well Depth: 67.5 FEET

Drilling Company: D.L. Maher
Drillers: Bill Putnam
TRC Inspector: J. Smith
Monitoring Well Coordinates:
N 197,457.50
E 522,609.80

Date Started: AUGUST 9, 1993
Date Completed: AUGUST 10, 1993
Depth to Water: 5.5 Feet
Monitoring Well Elevations:
Top of PVC = 13.10
Ground Elevation = 13.53

Depth (feet)	Blow Counts		Field Measurements OVA (ppm)	HNu (ppm)	Soil Description	Lithology	Monitoring Well Construction
64-66	2 1	2 25	0	--	0-23" Gray/black SILT, little clay, no odor, wet.		2" - 10 Slot PVC Screen
67-69	40 20	40 40	0	--	0-8" Grayish/black SILT, some rounded pieces of rock, little clay, no odor.	68.0	67.5 Bottom of Well
68.0-78.0 5' Core Run #1 2.9' recovery					Light to medium gray, fine-medium grained META SANDSTONE GNEISS with scattered shaly zones, brittle in upper 3.5', massive competent bottom 5'. Mineralogy: primarily quartz, plagioclase, hornblende, biotite, and clay minerals.		Bentonite Chips
5' Core Run #2 5.5' recovery						78.0	78.0 Bottom of Core

Sample 09-MW12-01 collected from 0-2'
Sample 09-MW12-03 collected from 4-6'

NOTE:
-- = Split spoon samples not scanned with HNu.

Monitoring Well: MW-13S
Site 09 - Allen Harbor Landfill
NCBC - Davisville
Well Depth: 13 FEET

Drilling Company: D.L. Maher
Drillers: J. Graglia & B. Burns
TRC Inspector: T. McMorrow
Monitoring Well Coordinates:
N 197,117.79
E 522,300.74

Date Started: JUNE 29, 1993
Date Completed: JUNE 29, 1993
Depth to Water: 1.5 Feet
Monitoring Well Elevations:
Top of PVC = 8.83
Ground Elevation = 6.31

Depth (feet)	Blow Counts		Field Measurements OVA (ppm)	HNu (ppm)	Soil Description
0-2	1	3	0.5	0.5	0-12" Brown SILT & F SAND, organic
	4	9			12-18" Brown/gray F-M SAND, tr silt, wet @ 1.5'.
4-6	7	4	0	5	0-12" Orange/brown M SAND, tr fine sand.
	4	6			12-18" Brown F SAND, little silt
9-11	6	5	0	0	0-4" Brown F SAND, little M sand, tr silt.
	4	5			4-14" Grey F SAND, tr silt.

Lithology

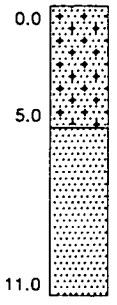

Monitoring Well Construction

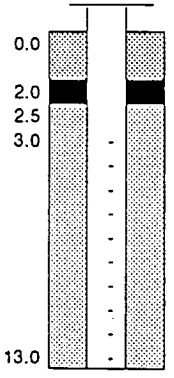

Sample 09-MW13-01 collected from 0-2'

Monitoring Well: MW-13D
Site 09 - Allen Harbor Landfill
NCBC - Davisville
Well Depth: 50 FEET

Drilling Company: D.L. Maher
Drillers: J. Graglia & B. Burns
TRC Inspector: T. McMorrow
Monitoring Well Coordinates:
N 197,121.47
E 522,298.89

Date Started: JUNE 25, 1993
Date Completed: JUNE 28, 1993
Depth to Water: 1.5 Feet
Monitoring Well Elevations:
Top of PVC = 9.28
Ground Elevation = 6.47

Depth (feet)	Blow Counts		Field Measurements OVA (ppm)	HNu (ppm)	Soil Description
0-2	1 4	3 9	0.5	0.5	0-12" Brown SILT & F SAND, organic 12-18" Brown/gray F-M SAND, tr silt, wet @ 1.5'.
4-6	7 4	4 6	0	5	0-12" Orange/brown M SAND, tr fine sand. 12-18" Brown F SAND, little silt
9-11	6 4	5 5	0	0	0-4" Brown F SAND, little M sand, tr silt. 4-14" Grey F SAND, tr silt.
14-16	2 3	2 4	0	0	Grey SILT, tr. fine sand, 10" recovery.
19-21	3 4	3 8	0	0	Same as above, 12" recovery.
24-26	4 7	5 7	0	0	Same as above, 16" recovery.
29-31	4 6	6 8	0	0	Same as above, 14" recovery.
34-36	6 9	6 8	0	0	Same as above, 8" recovery.
39-41	6 40	20 67	0	0	Grey SILT, little gravel, tr fine sand, 12" recovery.
44-46	14 19	12 18	0	0	Grey TILL, F-M sand, little gravel, tr silt, 14" recovery.
49-51	100/3"		0	0	Grey highly weathered BEDROCK, 3" recovery.
50-55 5' Core Run #1 4.8' recovery					0.0-4.2' Dark gray SHALE, brittle, shattered. 4.2-6.4' Light gray GNEISS, massive, competent. 6.4-8.3' Same as 0.0'-4.2' 8.3-9.8' Same as 4.2'-6.4' Mineralogy: quartz, plagioclase, biotite, muscovite, vein-healed fractures. Shale sections have some partings.
55-60 5' Core Run #2 5.0' recovery					

Lithology

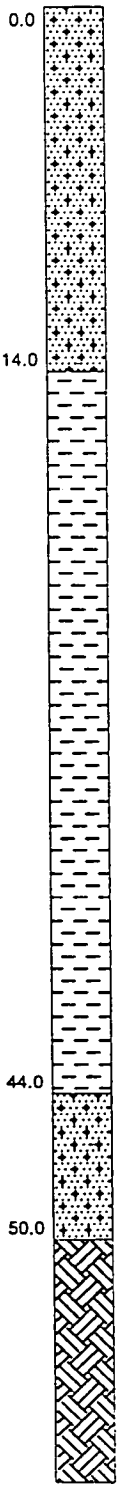

Monitoring Well Construction

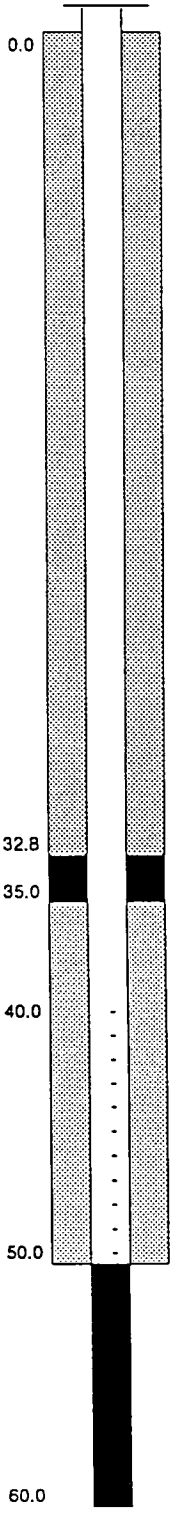

Piezometer Nest: PZ-1
Site 09 - Allen Harbor Landfill
NCBC - Davisville

Drilling Company: D.L. Maher
Drillers: J. Graglia & B. Burns
TRC Inspector: T. McMorrow

Date Started: JUNE 21, 1993
Date Completed: JUNE 22, 1993
Depth to Water: 9 FEET

Depth (feet)	Blow Counts		Field Measurements OVA (ppm)	HNu (ppm)	Soil Description
0-2	3	6	0	0	Brown Topsoil, M-F SAND, little gravel & organics, trace fill debris, dry, no odor. 12" recovery.
	38	100/1"			
2-4	47	60	10	0	Dk Brown/Black FILL, M-F sand, little gravel, metal & wood debris, strong odor, dry. 14" recovery.
	46	50			
4-6	32	27	>1000	0	0-8" Brown FILL, M-F sand, little gravel, dry.
	60	37			8-24" Black FILL, M-F sand, little gravel, strong odor, moist.
6-8	7	18	550	0	Dk Brown FILL, M-F sand, little gravel, wood frags., strong odor, moist. 10" recovery.
	14	25			
8-10	12	19	250	0	Dk Brown FILL, M-F sand, trace gravel, metal debris, slight odor, wet. 6" recovery.
	9	5			
13-15	10	10	350	0	0-4" Same as above.
	12	16			4-18" Lt Brown/Grey F SAND, some silt, organic material.
					18-20" Grey SILT, trace fine sand.
18-20	14	14	10	0	Grey SILT, very cohesive, moist. 20" recovery.
	16	21			

Lithology

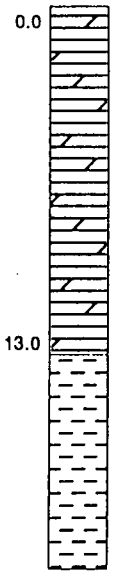

Piezometer Nest Construction

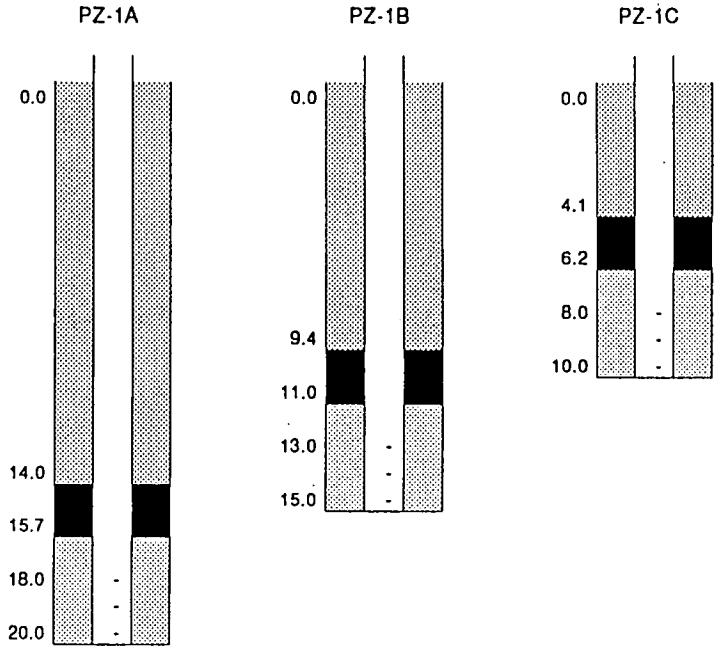

Notes: All piezometer wells are constructed with a 2' section of 1" - 10 slot PVC screen and 1" PVC riser.

- Screen section.
- Sand pack.
- Bentonite seal.
- Backfilled cuttings.

	PZ-1A	PZ-1B	PZ-1C
Ground Elevation:	11.21	11.80	12.07
Top of PVC Elevation:	13.20	13.69	13.89

Piezometer Nest: PZ-2
Site 09 - Allen Harbor Landfill
NCBC - Davisville

Drilling Company: D.L. Maher
Drillers: J. Graglia & B. Burns
TRC Inspector: T. McMorrow

Date Started: JUNE 17, 1993
Date Completed: JUNE 21, 1993
Depth to Water: 15 FEET

Depth (feet)	Blow Counts		Field Measurements OVA (ppm)	HNu (ppm)	Soil Description
0-2	3	15	0	0	Lt Brown F-M SAND, little gravel & asphalt, dry.
	10	7			16" recovery.
2-4	8	3	0	0	0-4" Same as above.
	2	3			4-8" Brown/orange FILL, M-C sand, wood, plastic, dry.
4-6	4	3	0	0	Lt. Brown FILL, F-M sand, little gravel, pieces of glass,
	3	9			metal, and wood, dry, no odor. 12" recovery.
6-8	15	55	4	0	Brown/Black FILL, M-C sand, rock fragments, asphalt &
	85	40			glass, dry, slight odor. 16" recovery.
8-10	20	39	20	14	Dk Brown FILL, M-F sand, little gravel, petroleum odor, moist.
	26	18			10" recovery.
10-12	15	19	5	2	Dk Brown FILL, wood, metal, glass debris, M-F sand, moist.
	30	10			6" recovery.
12-14	12	11	18	0	Black FILL, M-F sand, little gravel, metal & wood debris,
	40	100			trace of a white powder material, moist. 8" recovery.
14-16	24	40	90	2	Dk Brown/Black FILL, M-F sand, little debris (glass, metal),
	80	38			slight odor, moist/wet. 10" recovery.
16-18	12	14	20	0	Dk Brown FILL, F-M sand, little gravel, wet, no odor.
	16	12			4" recovery.
20-22	2	2	72	5	Dk Brown/Black FILL, F sand, little silt, tr gravel, wet, slight
	4	14			odor. 8" recovery.
25-27	3	10	80	1	0-4" Same as above.
	11	15			4-20" Grey F SAND & SILT, wet, slight odor.

Lithology

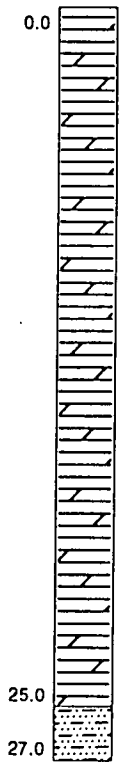

Piezometer Nest Construction

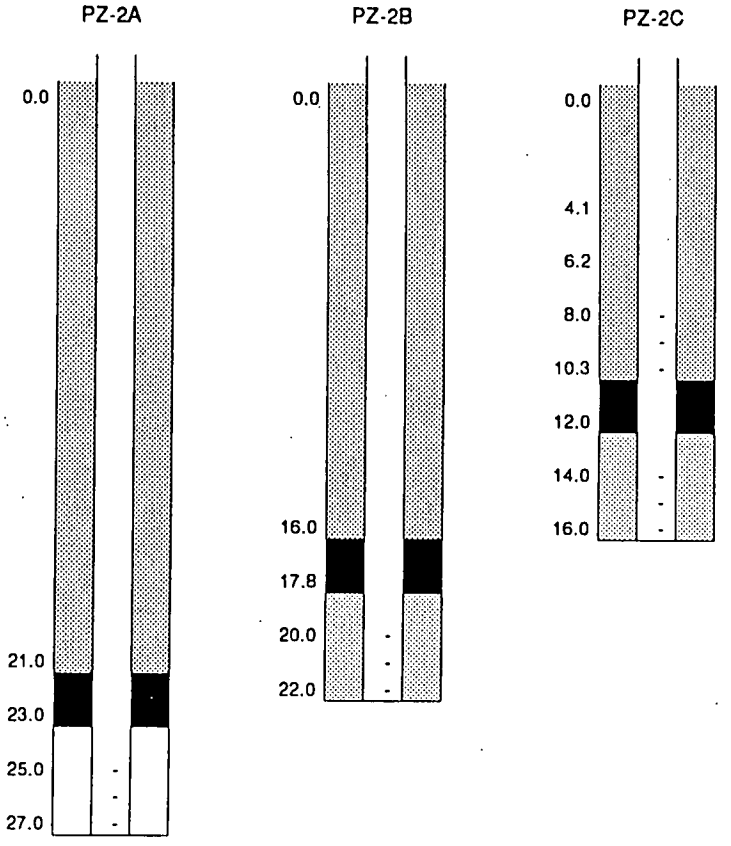

Notes: All piezometer wells are constructed with a 2' section of 1" - 10 slot PVC screen and 1" PVC riser.

- Screen section.
- Sand pack.
- Bentonite seal.
- Cement/Bentonite grout.

	PZ-2A	PZ-2B	PZ-2C
Ground Elevation:	16.95	16.61	16.67
Top of PVC Elevation:	18.17	19.32	19.37

Piezometer Nest: PZ-3
Site 09 - Allen Harbor Landfill
NCBC - Davisville

Drilling Company: D.L. Maner
Drillers: J. Graglia & B. Burns
TRC Inspector: T. McMorrow

Date Started: JUNE 22, 1993
Date Completed: JUNE 23, 1993
Depth to Water: 17 FEET

Depth (feet)	Blow Counts		Field Measurements OVA (ppm)	HNu (ppm)	Soil Description
0-2	6	9	0	0	Brown Topsoil w/ asphalt fragments, dry.
	5	5			3" recovery.
2-4	3	5	0	0	Brown F-M SAND, little asphalt & glass fragments, dry.
	13	11			4" recovery.
4-6	30	13			No Recovery
	10	11			
6-8	28	30	1	2	Dk Brown F-M SAND, some gravel, tr silt, dry.
	25	12			6" recovery.
8-10	30	10	10	0	0-12" Dk Brown F-M SAND, tr silt, glass fragments.
	17	36			12-23" Brown F-M SAND, some gravel, wood fragments, dry.
10-12	14	28	18	1	0-4" Dk Brown F-C SAND, some gravel, tr silt.
	29	18			4-12" Brown F SAND & SILT, damp.
12-14	7	11	1.2	1	0-12" Brown/Orange F-M SAND, some gravel, tr silt, dry.
	7	12			12-15" Dk Brown F SAND & SILT, damp.
14-16	15	20	0	0	Brown/Orange F-C SAND, some gravel & wood fragments,
	17	13			tr silt, damp. 12" recovery.
16-18	9	3	140	1	Dk Brown F-M SAND & SILT, tr gravel, wood & wire
	3	12			fragments, wet. 12" recovery.
22-24	20	20	1.2	0.6	Grey SILT, no odor, wet. 12" recovery.
	27	30			
27-29	17	21	1.8	0	Same as above. 24" recovery.
	25	32			

Lithology

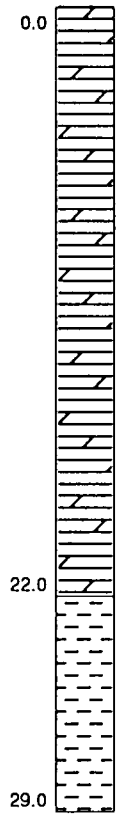

Piezometer Nest Construction

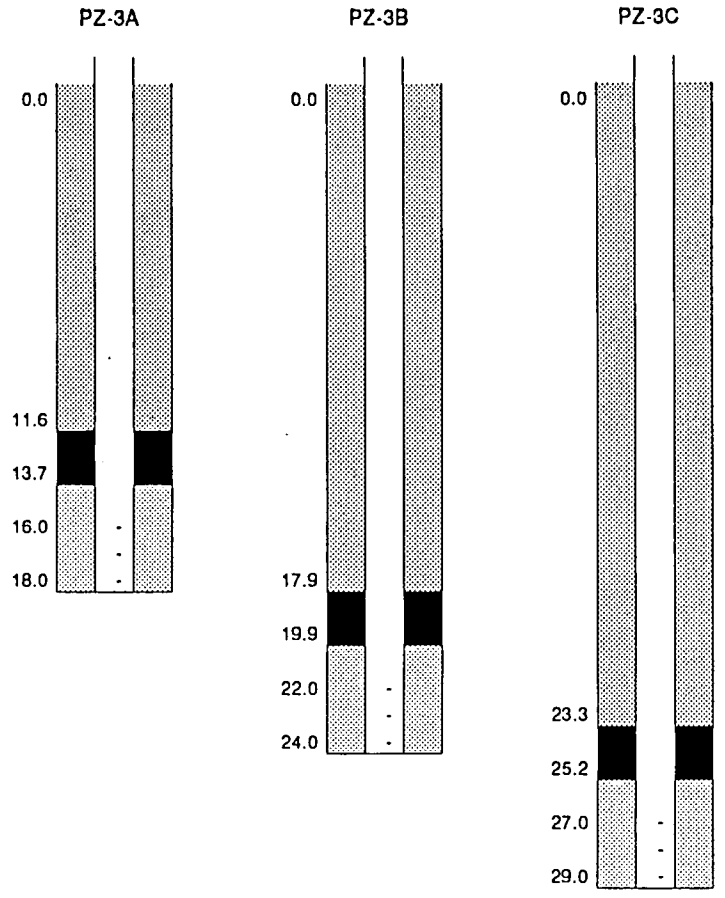

	Ground Elevation	Top of PVC Elevation
PZ-3A	8.13	19.56
PZ-3B	18.02	20.89
PZ-3C	18.34	21.17

Notes: All piezometer wells are constructed with a 2' section of 1" - 10 slot PVC screen and 1" PVC riser.

Screen section. Sand pack.

Bentonite seal. Cement/Bentonite grout.

Piezometer Nest PZ-4
Site 09 - Allen Harbor Landfill
NCBC - Davisville

Drilling Company: D.L. Maher
Drillers: J. Graglia & B. Burns
TRC Inspector: T. McMorrow

Date Started: JUNE 23, 1993
Date Completed: JUNE 24, 1993
Depth to Water: 11 FEET

Depth (feet)	Blow Counts		Field Measurements OVA (ppm)	HNu (ppm)	Soil Description
0-2	9	19	35	9	Lt Brown F-M SAND, little gravel, rock & asphalt pieces, dry.
	18	11			6" recovery.
2-4	18	22	200	50	Brown FILL, F-M sand, little gravel, asphalt, brick & wood
	21	28			debris, dry, no odor.
4-6	10	10	-	-	No Recovery.
	9	11			
6-8	20	28	-	-	No Recovery.
	10	25			
8-10	12	12	6.8	1	0-8" Wood
	5	9			8-16" Dk Brown/Red FILL, M-F sand, tr gravel & glass, moist.
10-12	2	3	1.5	1	Brown/orange FILL, F-M sand, little gravel, glass fragments,
	8	6			wet. 6" recovery.
15-17	2	4	950	18	0-6" Brown FILL, F-M sand, little gravel, wood fragments.
	9	15			6-10" Black M-F SAND, wire pieces.
					10-12" Brown PEAT.
					12-24" Grey SILT, tr F sand, wet, slight odor.
20-22	3	9	18	1	Grey SILT, very cohesive, moist. 12" recovery.
	15	19			

Lithology

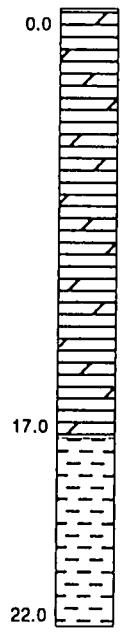

Piezometer Nest Construction

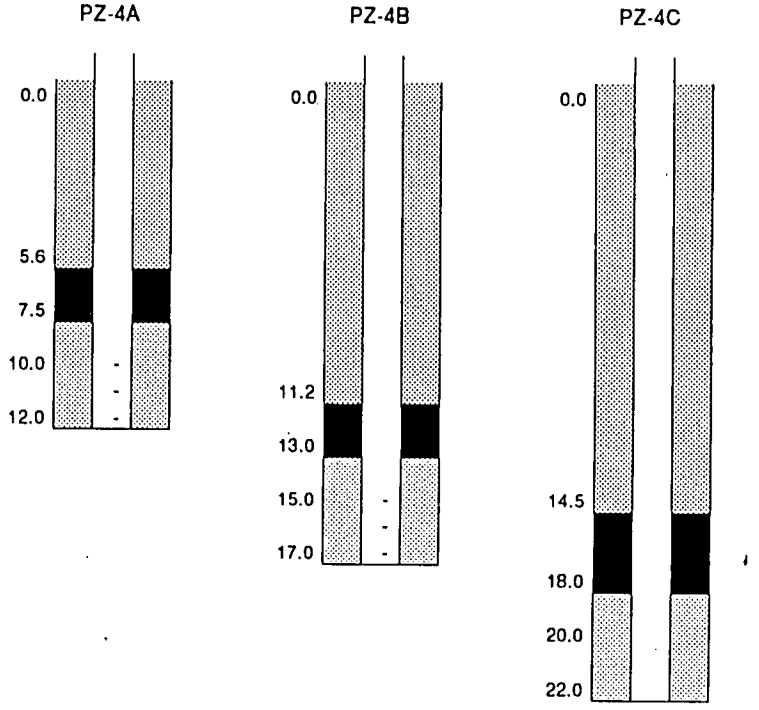

Notes: All piezometer wells are constructed with a 2' section of 1" - 10 slot PVC screen and 1" PVC riser.

Screen section. Sand pack.

Bentonite seal. Cement/Bentonite grout.

	PZ-4A	PZ-4B	PZ-4C
Ground Elevation:	12.41	12.67	12.95
Top of PVC Elevation	14.83	15.40	15.79

APPENDIX E

PHASE III RI WELL DEVELOPMENT FORMS

WELL DEVELOPMENT LOG

Client: NORDIV, NAVFAC
Project Title: IR Program Site 09, Allen Harbor Landfill
Project No.: 29600.32
Staff: J. Shapiro, D. Street

Well No.: MW-07I

1. Total Riser and Screen Length (ft)	36.6
2. Screen Internal Diameter (in.)	2
3. Water Level Below Measuring Point (ft)	15.48
4. Volume of Water in Well (gal) V = (1-3)*(5)	3.5

Screen ID	5. Volume/Ft (gal/ft)
1 in.	0.04
2 in.	0.17
4 in.	0.66
6 in.	1.50
8 in.	2.60

Parameters

				Surge			Surge		
Date	2/22/95	2/22/95	2/22/95	2/22/95	2/22/95	2/22/95	2/22/95	2/22/95	2/22/95
Total Gallons	0	3.5	7	10.5	14	17.5	21	24.5	28
Time (hrs)	1244	1247	1254	1301	1308	1316	1322	1330	1339
Temperature (°C)	10.9	11.4	12.2	12.5	12.5	12.6	12.6	12.4	12.2
Conductivity (μmhos)	980	697	945	954	899	933	953	973	985
pH	6.65	6.92	6.79	6.77	6.74	6.79	6.82	6.86	6.88
Turbidity (NTU)	21.1	002	179	106	60.1	95	66.5	160	90.2
Dissolved Oxygen (mg/L)	8.25	8.26	7.87	8.09	7.87	8.20	8.02	7.86	7.68
Microtip in bucket PID units	0.3	1.1	1.0	1.0	1.2	1.2	1.3	0.6	2.4

NOTES:125 Hz
Alchohol-like odor detected periodically.
Well head 0-2 ppm after being open for 20 minutes.
21 gal headspace on vial = 3.3 PID units. 24.5 gal headspace on vial = 8.1 PID units.
3.1 headspace on vial = 10.4
Recovery equals approximately 1 ft/min.

WELL DEVELOPMENT LOG

Client: NORDIV, NAVFAC
Project Title: IR Program IR Program Site 09, Allen Harbor Landfill
Project No.: 29600.32
Staff: J. Shapiro, D. Street

Well No.: MW-07I

1. Total Riser and Screen Length (ft)	36.6
2. Screen Internal Diameter (in.)	2
3. Water Level Below Measuring Point (ft)	15.48
4. Volume of Water in Well (gal) V = (1-3)*(5)	3.5

Screen ID	5. Volume/Ft (gal/ft)
1 in.	0.04
2 in.	0.17
4 in.	0.66
6 in.	1.50
8 in.	2.60

Parameters

Date	2/22/95	2/22/95							
Total Gallons	31.5	34							
Time (hrs)	1347	1355							
Temperature (°C)	12.4	12.4							
Conductivity (μmhos)	993	1,030							
pH	6.87	6.89							
Turbidity (NTU)	46.5	25.6							
Dissolved Oxygen (mg/L)	8.08	8.06							
Microtip in Bucket PID Units	1.0	2.4							

NOTES: Turbidity readings taken with an HF Scientific DRT 15C turbidimeter.

WELL DEVELOPMENT LOG

Client: NORDIV, NAVFAC
Project Title: IR Program Site 09, Allen Harbor Landfill
Project No.: 29600.32
Staff: J. Chon, J. Ropp

Well No.: MW-07R

1. Total Riser and Screen Length (ft)	84.73
2. Screen Internal Diameter (in.)	2
3. Water Level Below Measuring Point (ft)	17.91
4. Volume of Water in Well (gal) V = (1-3)*(5)	(66.82) (0.17) = 11.36

Screen ID	5. Volume/Ft (gal/ft)
1 in.	0.04
2 in.	0.17
4 in.	0.66
6 in.	1.50
8 in.	2.60

Parameters

Date	4/02/95	4/02/95	4/02/95	4/03/95	4/03/95	4/03/95	4/03/95
Total Gallons	0	11	16.5	16.5	22.0	27.5	33
Time (hrs)	1616	1646	1708	0855	0916	0938	1546
Temperature (°C)	13.7	13.3	12.3	11.7	12.0	11.6	12.5
Conductivity (μmhos)	322	285	268	356	329	386	822
pH	9.42	9.58	9.67	8.91	9.05	7.59	7.06
Turbidity (NTU)	10.1	10.1	127.0	20.8	10.8	57.3	126
Dissolved Oxygen (mg/L)	6.03	5.02	4.13	2.37	2.22	2.47	6.24
Salinity (%)	0.03	0.03	0.03	0.03	0.03	0.03	0.03
Eh	5.7	5.8	6.3	28.3	17.4	22.8	68.7

NOTES:

Let it recharge overnight. Well was hand bailed. 0845 hrs: 34.07 ft to H_2O from TOC (not recharged fully from the night before). 1007 hrs: 82.41 ft to H_2O and 84.73 ft to bottom - H_2O brownish; cloudy. Stop after 30 gal. 1515 hrs: 61.6 ft to H_2O. Dry at 1600 hrs. Bailed well dry each time and parameters would not stabilize.

WELL DEVELOPMENT LOG

Client: NORDIV, NAVFAC
Project Title: IR Program Site 09, Allen Harbor Landfill
Project No.: 29600.32
Staff: J. Shapiro, D. Street

Well No.: MW-14I

1. Total Riser and Screen Length (ft)	36.9
2. Screen Internal Diameter (in.)	2
3. Water Level Below Measuring Point (ft)	14.40
4. Volume of Water in Well (gal) V = (1-3)*(5)	3.8

Screen ID	5. Volume/Ft (gal/ft)
1 in.	0.04
2 in.	0.17
4 in.	0.66
6 in.	1.50
8 in.	2.60

Parameters

Surge

WL = 31.85

Date	2/21/95	2/21/95	2/22/95	2/22/95	2/22/95	2/22/95	2/22/95	2/22/95	2/22/95
Total Gallons	0	4	0	8	12	16	20	24	28
Time (hrs)	1514	1522	0830	0839	0850	0902	0913	0923	0930
Temperature (°C)	10.4	12.7	11.7	12.0	12.7	12.4	13	12.6	12.2
Conductivity (μmhos)	910	930	870	830	860	860	850	860	860
pH	6.89	6.93	6.67	6.91	6.96	7.02	6.94	6.98	6.88
Turbidity (NTU)	194	153	111	007	173	166	121	11.5	172
Dissolved Oxygen (mg/L)	8.50	7.69	8.65	8.4	7.99	7.78	7.73	7.58	7.54
Microtip ppm	0.0	0.3	0.2	1.9	1.7	2.3	2.2	2.7	3.2

NOTES: Turbidity readings taken with an HF Scientific DRT 15C turbidimeter.
125 Hz - 150 Hz. 3.7 ppm, odor detected at about 5 gal, well pumped dry.
Odor (alcohol-like) detected periodically.
0858 hrs: recalibrate microtip to 100 ppm isobutylene.
2/22 - 115 Hz - 127 (20 gal) 1 gal/2.5 min.

WELL DEVELOPMENT LOG

Client: NORDIV, NAVFAC
Project Title: IR Program Site 09, Allen Harbor Landfill
Project No.: 29600.32
Staff: J. Shapiro, D. Street

Well No.: MW-14I

1. Total Riser and Screen Length (ft)	36.9
2. Screen Internal Diameter (in.)	2
3. Water Level Below Measuring Point (ft)	14.40
4. Volume of Water in Well (gal) V = (1-3)*(5)	3.8

Screen ID	5. Volume/Ft (gal/ft)
1 in.	0.04
2 in.	0.17
4 in.	0.66
6 in.	1.50
8 in.	2.60

Parameters

Date	2/22/95	2/22/95	2/22/95	2/22/95	2/22/95			
Total Gallons	32	36	40	44	48			
Time (hrs)	0937	1010	1023	1036	1048			
Temperature (°C)	11.6	11.3	12.7	12.7	12.9			
Conductivity (μmhos)	820	890	920	930	940			
pH	6.89	6.66	6.81	6.87	6.90			
Turbidity (NTU)	001	011	16.1	133	157			
Dissolved Oxygen (mg/L)	7.61	7.59	6.96	7.23	7.18			
Microtip ppm				2.1	0.4			

NOTES:
Pumped dry after 32 gal; recovery = 1 ft/min.
1002 hrs: Well recovered to 18 ft BMP restart pump.

WELL DEVELOPMENT LOG

Client: NORDIV, NAVFAC
Project Title: IR Program Site 09, Allen Harbor Landfill
Project No.: 29600.32
Staff: J. Shapiro, D. Street

Well No.: MW-14D

1. Total Riser and Screen Length (ft)	61.7
2. Screen Internal Diameter (in.)	2
3. Water Level Below Measuring Point (ft)	16.6
4. Volume of Water in Well (gal) V = (1-3)*(5)	7.5

Screen ID	5. Volume/Ft (gal/ft)
1 in.	0.04
2 in.	0.17
4 in.	0.66
6 in.	1.50
8 in.	2.60

Parameters

				Surge WL=17.48			Surge WL =19.06		
Date	2/21/95	2/21/95	2/21/95	2/21/95	2/21/95	2/21/95	2/21/95	2/21/95	2/21/95
Total Gallons	0	7.5	15	22.5	30	37.5	45	52.5	60
Time (hrs)	1230	1242	1250	1256	1303	1310	1316	1324	1332
Temperature (°C)	11	10.9	10.5	10.8	11.5	11.7	11.9	12.0	11.7
Conductivity (μmhos)	2,260	1,420	1,370	1,370	1,310	1,260	1,260	1,300	1,280
pH	6.20	6.57	6.68	6.69	6.75	6.80	6.82	6.78	6.81
Turbidity (NTU)	37.2	1,802	194	147	185	185	118	113	138
Dissolved Oxygen (mg/L)	9.18	8.85	8.60	8.11	7.98	8.02	8.38	8.34	8.09
Microtip ppm		-0.06/1.5	2.6	3.0	3.2	—	1.4	0.8	1.6

NOTES: * Odors
At 100 Hz on controller, 1 gal per 3/4 min.
1315 hrs: Recalibration tip. 60 gal - put to bottom - little to no silt.
WL 17.04 ft after 1 hour.

WELL DEVELOPMENT LOG

Client: NORDIV, NAVFAC
Project Title: IR Program Site 09, Allen Harbor Landfill
Project No.: 29600.32
Staff: J. Shapiro/D. Street

Well No.: MW-14D

1. Total Riser and Screen Length (ft)	61.7
2. Screen Internal Diameter (in.)	2
3. Water Level Below Measuring Point (ft)	16.6
4. Volume of Water in Well (gal) V = (1-3)*(5)	7.5

Screen ID	5. Volume/Ft (gal/ft)
1 in.	0.04
2 in.	0.17
4 in.	0.66
6 in.	1.50
8 in.	2.60

Parameters

Date	2/21/95	2/21/95							
Total Gallons	67.5	75							
Time (hrs)	1343	1354							
Temperature (°C)	11.7	11.7							
Conductivity (μmhos)	1,220	1,280							
pH	6.76	6.85							
Turbidity (NTU)	114	91							
Dissolved Oxygen (mg/L)	8.03	7.90							
Microtip ppm	1.3	1.3							

NOTES:

WELL DEVELOPMENT LOG

Client: NORDIV, NAVFAC
Project Title: IR Program Site 09, Allen Harbor Landfill
Project No.: 29600.32
Staff: D. Acampora

Well No.: MW-15I (Pumping at 1.25 gal/min)

1. Total Riser and Screen Length (ft)	35.12 (TOC)
2. Screen Internal Diameter (in.)	2
3. Water Level Below Measuring Point (ft)	14.42
4. Volume of Water in Well (gal) V = (1-3)*(5)	(20.7) (0.17) = 3.5

Screen ID	5. Volume/Ft (gal/ft)
1 in.	0.04
2 in.	0.17
4 in.	0.66
6 in.	1.50
8 in.	2.60

Parameters

			Surge		Surge		Surge		Surge
Date	3/23/95	3/23/95	3/23/95	3/23/95	3/23/95	3/23/95	3/23/95	3/23/95	3/23/95
Total Gallons	0	3.5	7.0	10.5	14.0	17.5	21	24.5	28
Time (hrs)	1236	1239	1243	1247	1250	1258	1403	1408	1412
Temperature	12.5	12.9	12.9	12.6	12.6	12.8	12.3	12.5	12.3
Conductivity	1,380	1,350	1,340	1,330	1,300	1,320	1,300	1,330	1,330
pH	6.95	7.16	7.17	7.21	7.22	7.22	7.22	7.23	7.24
Turbidity	259*	63*	>999*	125*	472*	31*	842*	56*	435*
Dissolved Oxygen	3.6	1.25	0.30	1.50	1.05	2.79	0.80	6.06	1.42
Salinity (%)	0.6	0.6	0.6	0.5	0.5	0.5	0.6	0.6	0.6

NOTES:
* Readings taken with an Horiba U-10 sampling device. All other turbidity readings were taken with a
HACH 2100P.
Sheen on water - some odor - not petroleum. Getting a bitter taste in my mouth.

WELL DEVELOPMENT LOG

Client: NORDIV, NAVFAC
Project Title: IR Program Site 09, Allen Harbor Landfill
Project No.: 29600.32
Staff: D. Acampora

Well No.: MW-15I

1. Total Riser and Screen Length (ft)	35.12 (TOC)
2. Screen Internal Diameter (in.)	2
3. Water Level Below Measuring Point (ft)	14.42
4. Volume of Water in Well (gal) V = (1-3)*(5)	(20.7) (0.17) = 3.5

Screen ID	5. Volume/Ft (gal/ft)
1 in.	0.04
2 in.	0.17
4 in.	0.66
6 in.	1.50
8 in.	2.60

Parameters

Date	3/23/95	3/23/95	3/23/95	3/23/95	3/23/95	3/23/95	3/23/95	3/23/95
Total Gallons	31.5	35.0	38.5	42	45.5	49	52.5	56
Time (hrs)	1417	1421	NR	NR	NR	NR	NR	NR
Temperature	12.6	12.2	11.9	12.0	12.2	12.1	12.2	12.3
Conductivity	1,330	1,330	1,360	1,320	1,340	1,330	1,330	1,340
pH	7.23	7.23	7.41	7.33	7.31	7.27	7.28	7.26
Turbidity	40*	148*	169*	64.5*	54*	8.71	8.71	27.2
Dissolved Oxygen	0.64	1.54	1.67	0.50	1.92	1.93	0.65	0.56
Salinity (%)	0.6	0.6	0.6	0.6	0.6	0.6	0.6	0.6

NOTES:
* Readings taken with a Horiba U-10 sampling device. All other turbidity readings were taken with a HACH 2100P.
Still oil sheen and odor.

WELL DEVELOPMENT LOG

Client: NORDIV, NAVFAC
Project Title: IR Program Site 09, Allen Harbor Landfill
Project No.: 29600.32
Staff: D. Acampora

Well No.: MW-15I

1. Total Riser and Screen Length (ft)	35.12 (TOC)
2. Screen Internal Diameter (in.)	2
3. Water Level Below Measuring Point (ft)	14.42
4. Volume of Water in Well (gal) V = (1-3)*(5)	(20.7) (0.17) = 3.5

Screen ID	5. Volume/Ft (gal/ft)
1 in.	0.04
2 in.	0.17
4 in.	0.66
6 in.	1.50
8 in.	2.60

Parameters

Date	3/23/95	3/23/95	3/23/95	3/23/95	3/23/95	3/23/95		
Total Gallons	59.5	63	66.5	70.0	73.0	77.0		
Time (hrs)	NR	1506	1517	1525	1534	1540		
Temperature	12.2	12.2	12.0	12.2	12.3	12.3		
Conductivity	1,310	1,340	1,330	1,310	1,310	1,320		
pH	7.26	7.30	7.25	7.23	7.24	7.28		
Turbidity	17.4	8.14	4.49	3.65	2.27	2.55		
Dissolved Oxygen	1.87	0.97	0.61	1.71	1.52	0.26		
Salinity (%)	0.5	0.6	0.6	0.6	0.5	0.5		

NOTES:
Water still has sheen, foamy when poured.

WELL DEVELOPMENT LOG

Client: NORDIV, NAVFAC
Project Title: IR Program Site 09, Allen Harbor Landfill
Project No.: 29600.32
Staff: D. Acampora

Well No.: MW-16S (Pumping rate between 2/3 and 3/4 gal/min)

1. Total Riser and Screen Length (ft)	13.2
2. Screen Internal Diameter (in.)	2
3. Water Level Below Measuring Point (ft)	5.30
4. Volume of Water in Well (gal) V = (1-3)*(5)	(7.9) (0.17) = 1.34

Screen ID	5. Volume/Ft (gal/ft)
1 in.	0.04
2 in.	0.17
4 in.	0.66
6 in.	1.50
8 in.	2.60

Parameters

						Surge			Surge
Date	3/24/95	3/24/95	3/24/95	3/24/95	3/24/95	3/24/95	3/24/95	3/24/95	3/24/95
Total Gallons	0	1.4	2.8	4.5	5.8	7.2	8.5	10.0	13.0
Time (hrs)	0813	0816	0819	0823	0826	0831	0834	0839	0849
Temperature (°C)	8.5	8.6	8.7	8.7	8.7	9.1	9.8	8.6	8.7
Conductivity (μmhos)	960	1,020	1,030	1,040	1,050	1,060	1,060	1,070	1,080
pH	7.06	7.02	7.00	7.03	6.92	6.97	6.95	6.97	6.96
Turbidity (NTU)	>999*	>999*	>999*	>999*	778*	587*	>999*	381*	37.7
Dissolved Oxygen (mg/L)	1.36	1.26	1.29	1.03	0.79	0.63	0.88	1.56	3.12
Salinity (%)	0.4	0.4	0.4	0.4	0.4	0.4	0.4	0.4	0.4

NOTES:
* Readings taken with an Horiba U-10 samping device. All other turbidity readings were taken with a
HACH 2100P.
Oil sheen.

WELL DEVELOPMENT LOG

Client: NORDIV, NAVFAC
Project Title: IR Program Site 09, Allen Harbor Landfill
Project No.: 29600.32
Staff: D. Acampora

Well No.: MW-16S

1. Total Riser and Screen Length (ft)	13.2
2. Screen Internal Diameter (in.)	2
3. Water Level Below Measuring Point (ft)	5.30
4. Volume of Water in Well (gal) V = (1-3)*(5)	(7.9) (0.17) = 1.34

Screen ID	5. Volume/Ft (gal/ft)
1 in.	0.04
2 in.	0.17
4 in.	0.66
6 in.	1.50
8 in.	2.60

Parameters

Date	3/24/95	3/24/95	3/24/95	3/24/95	3/24/95	3/24/95	3/24/95	3/24/95	3/24/95
Total Gallons	17.0	23.0	30.0	35.0	37.0	42.0	47.0	52.0	54.0
Time (hrs)	0858	0907	0928	0935	0943	NR	NR	1010	1013
Temperature (°C)	9.5	8.8	9.4	9.3	9.3	9.8	9.8	9.4	10.0
Conductivity (μmhos)	1,090	1,100	1,050	1,080	1,070	1,110	1,110	1,080	1,050
pH	7.07	7.05	6.95	7.09	7.12	7.26	7.30	7.22	7.27
Turbidity (NTU)	>999	37.7	>999	45.3	23	NR	13.4	13.1	NR
Dissolved Oxygen (mg/L)	0.20	1.71	1.65	2.17	1.88	1.33	2.18	1.95	2.33
Salinity (%)	0.4	0.4	0.4	0.4	0.4	0.4	0.4	0.4	0.4

NOTES:
NR = No readings were taken.
Sheen intensifiying at about 15 gals, foamy when poured; odor.
Ran dry after 25 gal.
Recovered to 16.5 ft after 15 minutes.

WELL DEVELOPMENT LOG

Client: NORDIV, NAVFAC
Project Title: IR Program Site 09, Allen Harbor Landfill
Project No.: 29600.32
Staff: D. Acampora

Well No.: MW-16S

1. Total Riser and Screen Length (ft)	13.2
2. Screen Internal Diameter (in.)	2
3. Water Level Below Measuring Point (ft)	5.30
4. Volume of Water in Well (gal) V = (1-3)*(5)	(7.9) (0.17) = 1.34

Screen ID	5. Volume/Ft (gal/ft)
1 in.	0.04
2 in.	0.17
4 in.	0.66
6 in.	1.50
8 in.	2.60

Parameters

Date	3/24/95	3/24/95	3/24/95	3/24/95	3/24/95	3/24/95	3/24/95	
Total Gallons	56	58	60	62	64	66	68	
Time (hrs)	1020	1028	1036	1044	1051	1057	NR	
Temperature (°C)	9.6	9.8	9.7	9.8	9.8	9.7	9.5	
Conductivity (μmhos)	1,090	1,090	1,090	1,080	1,070	1,090	1,080	
pH	7.28	7.31	7.25	7.24	7.26	7.23	7.26	
Turbidity (NTU)	13.1	11.4	9.52	8.57	8.15	7.55	7.55	
Dissolved Oxygen (mg/L)	2.58	2.45	2.63	2.23	1.76	4.74	2.03	
Salinity (%)	0.4	0.4	0.4	0.4	0.4	0.4	0.4	

NOTES:
Oil sheen, odor.
I have a bitter taste in my mouth.
Eyes feel a little irritated.

WELL DEVELOPMENT LOG

Client: NORDIV, NAVFAC
Project Title: IR Program Site 09, Allen Harbor Landfill
Project No.: 29600.32
Staff: D. Acampora

Well No.: MW-17I (1 gal/min)

1. Total Riser and Screen Length (ft)	TOC 16.69
2. Screen Internal Diameter (in.)	2
3. Water Level Below Measuring Point (ft)	5.62
4. Volume of Water in Well (gal) V = (1-3)*(5)	(11.07) (0.17) = 1.89

Screen ID	5. Volume/Ft (gal/ft)
1 in.	0.04
2 in.	0.17
4 in.	0.66
6 in.	1.50
8 in.	2.60

Parameters

				Surge					Surge
Date	3/27/95	3/27/95	3/27/95	3/27/95	3/27/95	3/27/95	3/27/95	3/27/95	3/27/95
Total Gallons	0	2.5	6.0	11.0	16.0	18.0	20.0	22.0	24.0
Time (hrs)	1136	1141	1144	1155	1200	1203	1205	1209	1214
Temperature	12.8	12.5	11.8	12.4	11.5	11.4	11.3	11.3	11.4
Conductivity	1,070	1,070	1,090	920	1,090	1,080	1,070	1,090	1,090
pH	6.48	6.88	6.92	6.89	6.88	6.97	6.91	6.86	6.96
Turbidity	662*	46*	31*	>999*	629*	95.6	36.4	21.4	17.0
Dissolved Oxygen	0.45	0.03	0.04	0.05	1.50	1.71	1.10	2.98	0.02
Salinity (%)	0.4	0.4	0.4	0.4	0.4	0.4	0.4	0.4	0.4

NOTES:
Odor.

WELL DEVELOPMENT LOG

Client: NORDIV, NAVFAC
Project Title: IR Program Site 09, Allen Harbor Landfill
Project No.: 29600.32
Staff: D. Acampora

Well No.: MW-17I

1. Total Riser and Screen Length (ft)	TOC 16.69
2. Screen Internal Diameter (in.)	2
3. Water Level Below Measuring Point (ft)	5.62
4. Volume of Water in Well (gal) V = (1-3)*(5)	(11.07) (0.17) = 1.89

Screen ID	5. Volume/Ft (gal/ft)
1 in.	0.04
2 in.	0.17
4 in.	0.66
6 in.	1.50
8 in.	2.60

Parameters

Date	3/27/95	3/27/95	3/27/95	3/27/95	3/27/95	3/27/95	3/27/95	3/27/95	3/27/95
Total Gallons	29.0	31.0	33.0	35.0	37.0	39.0	40.0	42.0	44.0
Time (hrs)	1217	1218	1225	1229	1409	1411	1413	1415	1424
Temperature	15.1	12.0	11.8	11.6	13.0	12.3	12.1	12.1	11.9
Conductivity	1,020	1,080	1,070	1,090	1,050	1,080	1,070	1,090	1,060
pH	6.81	6.81	6.71	7.04	6.80	7.01	6.89	6.99	6.98
Turbidity	>999	348	44.4	15.6	80.7	10.2	9.86	5.57	6.30
Dissolved Oxygen	0.28	1.68	1.61	1.72	0.40	1.39	1.35	0.91	1.20
Salinity (%)	0.4	0.4	0.4	0.4	0.4	0.4	0.4	0.4	0.4

NOTES:
Odor (Pumped 1 hour.)
1230 hrs: Break for lunch.
1305 hrs: Restart pump.

WELL DEVELOPMENT LOG

Client: NORDIV, NAVFAC
Project Title: IR Program Site 09, Allen Harbor Landfill
Project No.: 29600.32
Staff: D. Acampora

Well No.: MW-17I

1. Total Riser and Screen Length (ft)	TOC 16.69
2. Screen Internal Diameter (in.)	2
3. Water Level Below Measuring Point (ft)	5.62
4. Volume of Water in Well (gal) V = (1-3)*(5)	(11.07) (0.17) = 1.89

Screen ID	5. Volume/Ft (gal/ft)
1 in.	0.04
2 in.	0.17
4 in.	0.66
6 in.	1.50
8 in.	2.60

Parameters

Date	3/27/95	3/27/95	3/27/95	3/27/95	3/27/95	3/27/95	3/27/95	3/27/95	3/27/95
Total Gallons	46	48	50	52	54	56	58	60	62
Time (hrs)	1426	1428	1431	1434	1442	1444	1450	1452	1455
Temperature	11.7	11.7	11.6	11.6	11.6	11.7	11.7	11.6	11.5
Conductivity	1,060	1,080	1,090	1,090	1,080	1,070	1,060	1,080	1,040
pH	6.95	6.83	6.79	7.08	7.10	6.92	6.96	7.05	7.07
Turbidity	5.22	4.35	3.95	3.83	2.95	2.92	2.47	2.47	2.66
Dissolved Oxygen	0.79	1.53	1.60	0.56	2.36	0.76	0.47	1.74	1.36
Salinity (%)	0.4	0.4	0.4	0.4	0.4	0.4	0.4	0.4	0.4

NOTES:
Odor.
Sheen on water.
Foamy when poured.

WELL DEVELOPMENT LOG

Client: NORDIV, NAVFAC
Project Title: IR Program Site 09, Allen Harbor Landfill
Project No.: 29600.32
Staff: D. Acampora

Well No.: MW-17I

1. Total Riser and Screen Length (ft)	TOC 16.69
2. Screen Internal Diameter (in.)	2
3. Water Level Below Measuring Point (ft)	5.62
4. Volume of Water in Well (gal) V = (1-3)*(5)	(11.07) (0.17) = 1.89

Screen ID	5. Volume/Ft (gal/ft)
1 in.	0.04
2 in.	0.17
4 in.	0.66
6 in.	1.50
8 in.	2.60

Parameters

Date	3/27/95	3/27/95	3/27/95						
Total Gallons	64	66	68						
Time (hrs)	1158	1300	1507						
Temperature	11.3	11.3	11.5						
Conductivity	1,070	1,090	1,070						
pH	7.05	7.10	6.96						
Turbidity	2.59	2.63	2.41						
Dissolved Oxygen	1.25	2.40	1.25						
Salinity (%)	0.4	0.4	0.4						

NOTES:
Odor.
Sheen on water surface.
Foamy when poured.

WELL DEVELOPMENT LOG

Client: NORDIV, NAVFAC
Project Title: IR Program IR Program Site 09, Allen Harbor Landfill
Project No.: 29600.32
Staff: Dave Street

Well No.: MW-17D

1. Total Riser and Screen Length (ft)	78.5
2. Screen Internal Diameter (in.)	2 in.
3. Water Level Below Measuring Point (ft)	26.59
4. Volume of Water in Well (gal) V = (1-3)*(5)	8.8

Screen ID	5. Volume/Ft (gal/ft)
1 in.	0.04
2 in.	0.17
4 in.	0.66
6 in.	1.50
8 in.	2.60

Parameters

Date	4/02/95	4/02/95	4/02/95	4/02/95	4/02/95	4/02/95	4/02/95	4/02/95	4/02/95
Total Gallons	0	5	10	18	26	34	42	50	58
Time (hrs)	1315	1337	1403	1431	1452	1516	1533	1617	1637
Temperature	15.6	18.0	17.8	17.7	18.7	17.0	17.3	15.3	15.6
Conductivity (μmhos)	324	303	364	414	456	449	528	554	537
pH	6.40	6.38	6.25	6.45	6.50	6.60	6.56	6.43	6.60
Turbidity	189	189	537	226	513	405	51.4	51.3	710
Dissolved Oxygen	15.35	3.45	1.56	1.83	1.63	1.97	1.92	1.87	0.78
Salinity (%)	0.1	0.1	0.1	0.1	0.1	0.1	0.2	0.2	0.2
Eh	-51.4	-118.5	-122.3	-123.1	-130.2	-113.0	-103.7	-73.3	-68.1

NOTES:
1415 hrs: Well dry after 16 gal stop to recharge; recharging approximately 1 ft/min
1428 hrs: Restart

WELL DEVELOPMENT LOG

Client: NORDIV, NAVFAC
Project Title: IR Program IR Program Site 09, Allen Harbor Landfill
Project No.: 29600.32
Staff: J. Ropp

Well No.: MW-17D

1. Total Riser and Screen Length (ft)	78.5
2. Screen Internal Diameter (in.)	2 in.
3. Water Level Below Measuring Point (ft)	26.59
4. Volume of Water in Well (gal) V = (1-3)*(5)	8.8

Screen ID	5. Volume/Ft (gal/ft)
1 in.	0.04
2 in.	0.17
4 in.	0.66
6 in.	1.50
8 in.	2.60

Parameters

Date	4/03/95	4/03/95	4/03/95	4/03/95	4/03/95	4/03/95	4/03/95		
Total Gallons	66	74	82	90	98	106	111		
Time (hrs)	1000	1022	1045	1115	1135	1155	1209		
Temperature	12.6	15.6	15.8	16.4	16.1	15.5	17.6		
Conductivity (μmhos)	960	609	624	576	644	633	723		
pH	6.10	6.55	6.52	6.55	6.66	6.62	6.56		
Turbidity V-10/Mach	12.8	23.2	6.78	19.8	14.6	10.1	68		
Dissolved Oxygen	3.50	1.53	10.85	1.52	2.50	1.20	1.32		
Salinity (%)	0.4	0.2	0.2	0.2	0.2	0.2	0.3		
Eh	-61.7	-46.9	-53.2	-77.9	-64.8	-61.7	-56.3		

NOTES:

WELL DEVELOPMENT LOG

Client: NORDIV, NAVFAC
Project Title: IR Program Site 09, Allen Harbor Landfill
Project No.: 29600.32
Staff: D. Acampora; J. Ropp

Well No.: MW-18I

1. Total Riser and Screen Length (ft)	28.15
2. Screen Internal Diameter (in.)	2
3. Water Level Below Measuring Point (ft)	12.93
4. Volume of Water in Well (gal) V = (1-3)*(5)	(15.22) (0.17) = 2.59

Screen ID	5. Volume/Ft (gal/ft)
1 in.	0.04
2 in.	0.17
4 in.	0.66
6 in.	1.50
8 in.	2.60

Parameters

		Surge			Surge				
Date	3/30/95	3/30/95	3/30/95	3/30/95	3/30/95	3/30/95	3/30/95	3/30/95	3/30/95
Total Gallons	0	5	10	15	20	25	30	35	40
Time (hrs)	1348*	1352*	1355*	1359*	1401*	1404*	1406*	1411	1414
Temperature (°C)	11.9	11.4	11.5	11.3	11.2	11.2	11.4	11.5	11.4
Conductivity (μmhos)	930	940	905	895	893	887	890	886	886
pH	7.25	7.02	6.97	6.92	6.88	6.89	6.85	6.82	6.82
Turbidity (NTU)	>999**	688**	539	404	324	324	250	135	135
Dissolved Oxygen (mg/L)	0.25	0.25	0.41	0.32	0.66	0.56	0.27	0.32	0.88
Salinity (%)	0.4	0.4	0.3	0.3	0.3	0.3	0.3	0.3	0.3

NOTES:
* Oil sheen.
Strong odor.
** Readings taken with a Horiba U-10 samplng device. All other turbidity readings were taken with a
HACH 2100P.

WELL DEVELOPMENT LOG

Client: NORDIV, NAVFAC
Project Title: IR Program Site 09, Allen Harbor Landfill
Project No.: 29600.32
Staff: D. Acampora; J. Ropp

Well No.: MW-18I

1. Total Riser and Screen Length (ft)	28.15
2. Screen Internal Diameter (in.)	2
3. Water Level Below Measuring Point (ft)	12.93
4. Volume of Water in Well (gal) V = (1-3)*(5)	(15.22) (0.17) = 2.59

Screen ID	5. Volume/Ft (gal/ft)
1 in.	0.04
2 in.	0.17
4 in.	0.66
6 in.	1.50
8 in.	2.60

Parameters

			Surge*	Surge			Surge		
Date	3/30/95	3/30/95	3/30/95	3/30/95	3/30/95	3/30/95	3/30/95	3/30/95	3/30/95
Total Gallons	45	50	55	60	65	70	75	80	85
Time (hrs)	1417	1420	1426	1432	1438	1445	1451	1457	1503
Temperature (°C)	11.3	11.5	11.5	11.2	11.1	11.1	11.3	11.1	11.1
Conductivity (μmhos)	890	891	865	854	875	863	860	861	869
pH	6.83	6.82	6.78	6.77	6.95	6.80	6.77	6.75	6.75
Turbidity (NTU)	NR	33.6	12.4	94.2	230	230	22.8	22.8	NR
Dissolved Oxygen (mg/L)	0.72	0.68	0.55	0.48	0.40	0.68	0.44	0.40	0.48
Salinity (%)	0.3	0.3	0.3	0.3	0.3	0.3	0.3	0.3	0.3

NOTES:
NR = No reading was taken.
*Slowed pumping rate.
Strong odor. Slight sudsing when poured. Slight sheen.

WELL DEVELOPMENT LOG

Client: NORDIV, NAVFAC
Project Title: IR Program Site 09, Allen Harbor Landfill
Project No.: 29600.32
Staff: J. Ropp; D. Acampora

Well No.: MW-18I

1. Total Riser and Screen Length (ft)	28.15
2. Screen Internal Diameter (in.)	2
3. Water Level Below Measuring Point (ft)	12.93
4. Volume of Water in Well (gal) V = (1-3)*(5)	(15.22) (0.17) = 2.59

Screen ID	5. Volume/Ft (gal/ft)
1 in.	0.04
2 in.	0.17
4 in.	0.66
6 in.	1.50
8 in.	2.60

Parameters

	Surge	Surge							
Date	3/30/95	3/30/95	3/30/95	3/30/95	3/30/95	3/30/95			
Total Gallons	90	95	100	105	110	115			
Time (hrs)	1510	1520	1526	1534	1541	1549			
Temperature (°C)	11.2	10.9	10.8	10.9	11.0	10.9			
Conductivity (μmhos)	857	853	865	871	862	870			
pH	6.80	6.77	6.75	6.76	6.78	6.81			
Turbidity (NTU)	9.18	591	16.3	6.59	4.73	4.73			
Dissolved Oxygen (mg/L)	0.65	0.22	0.45	0.74	0.54	0.48			
Salinity (%)	0.3	0.3	0.3	0.3	0.3	0.3			

NOTES:

WELL DEVELOPMENT LOG

Client: NORDIV, NAVFAC
Project Title: IR Program Site 09, Allen Harbor Landfill
Project No.: 29600.32
Staff: J. Chon

Well No.: MW-19I

1. Total Riser and Screen Length (ft)	29.49 silty buttom
2. Screen Internal Diameter (in.)	2
3. Water Level Below Measuring Point (ft)	13.46
4. Volume of Water in Well (gal) V = (1-3)*(5)	(16.03) (0.17) = 2.73 (3)

Screen ID	5. Volume/Ft (gal/ft)
1 in.	0.04
2 in.	0.17
4 in.	0.66
6 in.	1.50
8 in.	2.60

Parameters

Date	3/31/95	3/31/95	3/31/95	3/31/95	3/31/95	3/31/95	3/31/95	3/31/95	3/31/95
Total Gallons	3.0	6.0	9.0	12.0	15.0	18.0	21.0	24.0	27.0
Time (hrs)	0903	0910	0918	0925	0930	0936	0941	0947	0953
Temperature	10.9	11.9	11.9	12.2	12.2	12.2	12.4	12.3	12.4
Conductivity (μmhos)	565	592	598	592	592	595	595	592	595
pH	7.31	7.22	7.19	7.24	7.21	7.20	7.18	7.18	7.17
Turbidity	>999	>999	>999	>999	>999	>999	>999	>999	>999
Dissolved Oxygen	0.87	1.10	0.92	0.95	1.51	1.82	1.41	1.71	1.57
Salinity (%)	0.06	0.09	0.09	0.09	0.09	0.09	0.1	0.1	0.09
Eh	120.2	108.7	111.2	111.3	80.4	97.3	96.5	94.2	95.2

NOTES:
Well was surged after each well volume. Very silty, charcoal colored H_2O.

WELL DEVELOPMENT LOG

Client: NORDIV, NAVFAC
Project Title: IR Program Site 09, Allen Harbor Landfill
Project No.: 29600.32
Staff: J. Chon

Well No.: MW-19I

1. Total Riser and Screen Length (ft)	29.49
2. Screen Internal Diameter (in.)	
3. Water Level Below Measuring Point (ft)	13.46
4. Volume of Water in Well (gal) V = (1-3)*(5)	(16.03) (.17) = 2.73 (3)

Screen ID	5. Volume/Ft (gal/ft)
1 in.	0.04
2 in.	0.17
4 in.	0.66
6 in.	1.50
8 in.	2.60

Parameters

Date	3/31/95	3/31/95	3/31/95	3/31/95	3/31/95	3/31/95	3/31/95	3/31/95	3/31/95
Total Gallons	30.0	33.0	36.0	39.0	42.0	45.0	48.0	51.0	54.0
Time (hrs)	1000	1008	1015	1022	1029	1036	1042	1049	1055
Temperature	12.8	12.7	12.6	12.6	12.6	12.7	12.5	12.9	12.6
Conductivity (μmhos)	596	585	595	596	582	597	595	598	598
pH	7.17	7.16	7.16	7.19	7.15	7.15	7.17	7.15	7.15
Turbidity	>999	>999	>999	>999	>999	>999	>999	>999	>999
Dissolved Oxygen	1.46	1.52	1.57	1.54	1.47	1.52	1.62	1.60	1.91
Salinity (%)	0.09	0.09	0.09	0.09	0.09	0.09	0.09	0.09	0.09
Eh	82.1	91.0	82.5	78.0	70.1	70.7	63.4	68.9	62.1

NOTES:
Well was surged after each well volume.

WELL DEVELOPMENT LOG

Client: NORDIV, NAVFAC
Project Title: IR Program Site 09, Allen Harbor Landfill
Project No.: 29600.32
Staff: J. Chon

Well No.: MW-19I

1. Total Riser and Screen Length (ft)	29.49
2. Screen Internal Diameter (in.)	2
3. Water Level Below Measuring Point (ft)	13.46
4. Volume of Water in Well (gal) V = (1-3)*(5)	(16.03) (0.17) = 2.73 3 gal

Screen ID	5. Volume/Ft (gal/ft)
1 in.	0.04
2 in.	0.17
4 in.	0.66
6 in.	1.50
8 in.	2.60

Parameters

Date	3/31/95	3/31/95	3/31/95	3/31/95	3/31/95			
Total Gallons	57.0	60.0	63.0	66.0	69.0			
Time (hrs)	1058	1101	1105	1109	1113			
Temperature	12.3	12.4	12.4	12.5	12.4			
Conductivity (μmhos)	598	596	590	596	593			
pH	7.15	7.15	7.14	7.15	7.15			
Turbidity	>999	212	315	201	187			
Dissolved Oxygen	1.63	1.51	1.86	1.71	1.83			
Salinity (%)	0.09	0.09	0.09	0.09	0.09			
Eh	62.7	56.2	66.5	53.4	54.2			

NOTES:
Surged MW-19I at 57.0 gal and discontinued surging/agitating H_2O in well. pH, TOC, conductivity, and salinity
stabilized. Turbidity decreased as surging was discontinued.

WELL DEVELOPMENT LOG

Client: NORDIV, NAVFAC
Project Title: IR Program Site 09, Allen Harbor Landfill
Project No.: 29600.32
Staff: D. Acampora

Well No.: MW-20S (1 gal/min)

1. Total Riser and Screen Length (ft)	21.68
2. Screen Internal Diameter (in.)	2
3. Water Level Below Measuring Point (ft)	15.66
4. Volume of Water in Well (gal) V = (1-3)*(5)	(6.02) (0.17) = 1.0

Screen ID	5. Volume/Ft (gal/ft)
1 in.	0.04
2 in.	0.17
4 in.	0.66
6 in.	1.50
8 in.	2.60

Parameters

						Surge			
Date	3/28/95	3/28/95	3/28/95	3/28/95	3/28/95	3/28/95	3/28/95	3/28/95	3/28/95
Total Gallons	0	2	4	6	8	10	12	14	16
Time (hrs)	0907	0910	0912	0916	0918	0919	0924	0926	NR
Temperature	9.8	10.0	10.6	10.7	10.7	10.8	10.5	10.9	11.0
Conductivity (μmhos)	5,190	1,540	1,450	1,390	1,390	1,370	1,390	1,410	1,350
pH	6.80	7.22	7.12	7.11	7.16	7.10	7.07	6.93	7.17
Turbidity	>999	>999	133	39.2	25.3	17.7	NR	43.5	NR
Dissolved Oxygen	0.48	3.65	1.77	0.45	2.26	3.37	1.87	2.09	1.44
Salinity (%)	2.6	0.6	0.6	0.6	0.6	0.6	0.6	0.6	0.6

NOTES:
NR = No reading was taken.
Odor not hydrocarbon.

WELL DEVELOPMENT LOG

Client: NORDIV, NAVFAC
Project Title: IR Program Site 09, Allen Harbor Landfill
Project No.: 29600.32
Staff: D. Acampora

Well No.: MW-20S

1. Total Riser and Screen Length (ft)	21.68
2. Screen Internal Diameter (in.)	2
3. Water Level Below Measuring Point (ft)	15.66
4. Volume of Water in Well (gal) V = (1-3)*(5)	(6.02) (0.17) = 1.0

Screen ID	5. Volume/Ft (gal/ft)
1 in.	0.04
2 in.	0.17
4 in.	0.66
6 in.	1.50
8 in.	2.60

Parameters

Surge

Date	3/28/95	3/28/95	3/28/95	3/28/95	3/28/95	3/28/95	3/28/95	3/28/95	3/28/95
Total Gallons	18	20	22	24	26	28	30	32	34
Time (hrs)	0934	0936	0939	0941	0944	0946	0949	0953	0955
Temperature	10.8	11.0	11.7	10.8	10.9	10.8	11.2	11.1	11.3
Conductivity (μmhos)	1,420	1,360	3,590	1,430	1,380	1,350	1,330	1,340	1,360
pH	7.07	7.07	7.03	7.04	7.05	7.04	7.21	7.00	7.23
Turbidity	10.9	7.98	>999	163	43.7	22.1	15.3	10.5	8.15
Dissolved Oxygen	1.97	1.22	0.37	1.42	1.42	1.70	0.91	0.76	8.98
Salinity (%)	0.6	0.5	1.7	0.6	0.6	0.5	0.5	0.5	0.6

NOTES:

WELL DEVELOPMENT LOG

Client: NORDIV, NAVFAC
Project Title: IR Program Site 09, Allen Harbor Landfill
Project No.: 29600.32
Staff: D. Acampora

Well No.: MW-20S

1. Total Riser and Screen Length (ft)	21.68
2. Screen Internal Diameter (in.)	2
3. Water Level Below Measuring Point (ft)	15.66
4. Volume of Water in Well (gal) V = (1-3)*(5)	(6.02) (0.17) = 1.0

Screen ID	5. Volume/Ft (gal/ft)
1 in.	0.04
2 in.	0.17
4 in.	0.66
6 in.	1.50
8 in.	2.60

Parameters

Date	3/28/95	3/28/95	3/28/95	3/28/95	3/28/95	3/28/95	3/28/95	3/28/95	3/28/95
Total Gallons	36	38	40	42	44	46	48	50	52
Time (hrs)	1000	1002	1005	1007	1010	1014	1017	1020	1023
Temperature	11.0	11.0	10.09	10.8	10.7	10.0	11.2	11.2	11.2
Conductivity (μmhos)	1,270	1,340	1,360	1,400	1,410	1,320	1,350	1,400	1,370
pH	7.09	7.24	7.31	7.34	7.32	7.15	7.23	7.25	7.27
Turbidity	6.48	6.04	3.79	4.16	3.15	3.44	3.13	2.41	2.33
Dissolved Oxygen	1.60	1.26	1.98	2.90	2.26	1.43	4.88	1.91	1.71
Salinity (%)	0.5	NR	NR	NR	NR	NR	NR	NR	NR

NOTES:
Odor-foamy when poured.

WELL DEVELOPMENT LOG

Client: NORDIV, NAVFAC
Project Title: IR Program Site 09, Allen Harbor Landfill
Project No.: 29600.32
Staff: D. Acampora

Well No.: MW-20S

1. Total Riser and Screen Length (ft)	21.68
2. Screen Internal Diameter (in.)	2
3. Water Level Below Measuring Point (ft)	15.66
4. Volume of Water in Well (gal) V = (1-3)*(5)	(6.02) (0.17) = 1.0

Screen ID	5. Volume/Ft (gal/ft)
1 in.	0.04
2 in.	0.17
4 in.	0.66
6 in.	1.50
8 in.	2.60

Parameters

Date	3/28/95	3/28/95	3/28/95	3/28/95	3/28/95	3/28/95	3/28/95	3/28/95	3/28/95
Total Gallons	54	56	58	60	62	64	66	68	70
Time (hrs)	1026	1030	1034	1037	1041	1046	1049	1052	1054
Temperature	11.0	11.0	11.3	11.5	11.5	11.1	11.1	11.2	11.5
Conductivity (μmhos)	1,340	1,350	1,360	1,330	1,310	1,310	1,310	1,330	1,290
pH	7.29	7.05	7.23	7.13	7.25	7.03	6.91	6.99	6.99
Turbidity	2.54	2.22	2.80	2.80	2.38	1.81	2.25	2.01	NR
Dissolved Oxygen	1.70	0.98	0.96	8.50	1.20	1.65	2.02	0.64	1.08
Salinity (%)	0.5	0.5	0.5	0.6	0.5	0.5	0.5	0.5	0.5

NOTES:
NR = No reading was taken.
Odor becoming foamy when poured at about 60 gal.
0.1 ppm HNu.

WELL DEVELOPMENT LOG

Client: NORDIV, NAVFAC
Project Title: IR Program Site 09, Allen Harbor Landfill
Project No.: 29600.32
Staff: D. Acampora

Well No.: MW-20S

1. Total Riser and Screen Length (ft)	21.68
2. Screen Internal Diameter (in.)	2
3. Water Level Below Measuring Point (ft)	15.66
4. Volume of Water in Well (gal) V = (1-3)*(5)	(6.02) (0.17) = 1.0

Screen ID	5. Volume/Ft (gal/ft)
1 in.	0.04
2 in.	0.17
4 in.	0.66
6 in.	1.50
8 in.	2.60

Parameters

Date	3/28/95	3/28/95	3/28/95	3/28/95				
Total Gallons	72	74	76	78				
Time (hrs)	1058	1101	1104	1108				
Temperature	11.4	11.1	11.4	11.3				
Conductivity (μmhos)	1,310	1,310	1,280	1,300				
pH	7.23	7.06	7.11	7.05				
Turbidity	1.51	1.54	1.54	1.51				
Dissolved Oxygen	1.41	0.80	1.23	1.76				
Salinity (%)	0.5	0.5	0.5	0.5				

NOTES:
Odor-foamy when poured.

WELL DEVELOPMENT LOG

Client: NORDIV, NAVFAC
Project Title: IR Program Site 09, Allen Harbor Landfill
Project No.: 29600.32
Staff: J. Chon

Well No.: MW-20I

1. Total Riser and Screen Length (ft)	33.24
2. Screen Internal Diameter (in.)	2
3. Water Level Below Measuring Point (ft)	15.46
4. Volume of Water in Well (gal) V = (1-3)*(5)	(17.78) (0.17) = 3.02

Screen ID	5. Volume/Ft (gal/ft)
1 in.	0.04
2 in.	0.17
4 in.	0.66
6 in.	1.50
8 in.	2.60

Parameters

Date	3/28/95	3/28/95	3/28/95	3/28/95	3/28/95	3/28/95	3/28/95	3/28/95	3/28/95
Total Gallons	0	3	6	9	15	18	21	24	27
Time (hrs)	1320	1327	1330	1334	1436	1503	1507	1511	1516
Temperature (°C)	12.5	12.6	12.5	12.6	12.3	11.8	13.0	12.7	13.3
Conductivity (μmhos)	2,160	2,420	2,410	2,270	2,060	2,170	2,010	2,100	2,060
pH	6.70	6.61	6.56	6.40	6.34	6.33	6.27	6.28	6.31
Turbidity (NTU)	>999	>999	>999	>999	>999	>999	>999	>999	>999
Dissolved Oxygen (mg/L)	0.70	1.13	3.44	1.02	1.78	2.35	2.78	2.30	2.40
Salinity (%)	1.0	1.1	1.1	1.0	0.9	1.0	0.9	1.0	1.0
Eh	NR	NR	NR	NR	NR	NR	NR	NR	NR

NOTES:
Solvent smell - very silty.
1345 hrs: Stop after 12 gal - surge and purge results in silty H_2O. HNu readings at 1,000 ppm and 20 ppm over
drum and 5-gal bucket while H_2O agitated and 2-5 ppm no agitation, no H_2O
1415 hrs: Draeger tube testing.
1444 hrs: Stop pumped dry at 17.5 gal.

WELL DEVELOPMENT LOG

Client: NORDIV, NAVFAC
Project Title: IR Program Site 09, Allen Harbor Landfill
Project No.: 29600.32
Staff: J. Chon

Well No.: MW-20I

1. Total Riser and Screen Length (ft)	33.24
2. Screen Internal Diameter (in.)	2
3. Water Level Below Measuring Point (ft)	15.46
4. Volume of Water in Well (gal) V = (1-3)*(5)	(17.78) (0.17) = 3.02

Screen ID	5. Volume/Ft (gal/ft)
1 in.	0.04
2 in.	0.17
4 in.	0.66
6 in.	1.50
8 in.	2.60

Parameters

Date	3/28/95	3/28/95	3/28/95	3/28/95	3/28/95	3/28/95	3/28/95	3/28/95	3/28/95
Total Gallons	30	33	36	39	42	45	48	51	54
Time (hrs)	1521	1527	1612	1616	1620	1624	1629	1637	1643
Temperature (°C)	13.7	13.8	12.9	13.2	13.0	13.2	12.9	12.7	12.7
Conductivity (μmhos)	2,040	2,060	2,120	2,150	2,160	2,050	2,050	2,030	2,050
pH	6.34	6.31	6.39	6.34	6.33	6.31	6.29	6.31	6.34
Turbidity (NTU)	>999	>999	>999	>999	>999	>999	>999	>999	>999
Dissolved Oxygen (mg/L)	1.34	8.65	3.07	2.29	1.90	1.80	1.23	1.36	0.96
Salinity (%)	1.0	0.9	0.9	1.0	1.0	0.9	0.9	1.0	0.9

NOTES:
Pumping varied: H_2O purged at an uneven rate. H_2O still very silty. Dark charcoal color - readings all taken
under constant surgining; 1528 hrs: stop.

WELL DEVELOPMENT LOG

Client: NORDIV, NAVFAC
Project Title: IR Program Site 09, Allen Harbor Landfill
Project No.: 29600.32
Staff: J. Chon

Well No.: MW-20I

1. Total Riser and Screen Length (ft)	33.24
2. Screen Internal Diameter (in.)	2
3. Water Level Below Measuring Point (ft)	15.46
4. Volume of Water in Well (gal) V = (1-3)*(5)	(17.78) (0.17) = 3.02

Screen ID	5. Volume/Ft (gal/ft)
1 in.	0.04
2 in.	0.17
4 in.	0.66
6 in.	1.50
8 in.	2.60

Parameters

Date	3/28/95	3/28/95	3/28/95	3/28/95	3/28/95			
Total Gallons	57	60	63	66	69			
Time (hrs)	1647	1652	1657	1701	1706			
Temperature (°C)	12.5	12.5	12.5	12.3	12.3			
Conductivity (μmhos)	1,970	1,990	2,010	2,020	2,030			
pH	6.34	6.32	6.27	6.29	6.28			
Turbidity (NTU)	>999	>999	>999	>999	>999			
Dissolved Oxygen (mg/L)	1.73	1.15	0.89	1.05	0.96			
Salinity (%)	0.9	0.9	0.9	0.9	0.9			

NOTES:
1704 hrs: HNu registering 4 ppm ambient adjacent to 55-gal drum with contained H_2O.
pH, T°C, conductivity, and salinity stabilized.
Turbidity still very high although it cleared up from initial reading.

WELL DEVELOPMENT LOG

Client: NORDIV, NAVFAC
Project Title: IR Program Site 09, Allen Harbor Landfill
Project No.: 29600.32
Staff: D. Acampora

Well No.: MW-20D; Pumping at 1 gal/min

1. Total Riser and Screen Length (ft)	62.50 TOC
2. Screen Internal Diameter (in.)	2
3. Water Level Below Measuring Point (ft)	14.82
4. Volume of Water in Well (gal) V = (1-3)*(5)	(47.68) (0.17) = 8.12

Screen ID	5. Volume/Ft (gal/ft)
1 in.	0.04
2 in.	0.17
4 in.	0.66
6 in.	1.50
8 in.	2.60

Parameters

						Surge		Surge	
Date	3/29/95	3/29/95	3/29/95	3/29/95	3/29/95	3/29/95	3/29/95	3/29/95	3/29/95
Total Gallons	0	8	16	24	32	40	48	56	64
Time (hrs)	0955	1005	1019	1032	1040	1053	1102	1112	1122
Temperature	13.5	13.5	14.5	14.2	14.0	14.2	14.1	14.0	14.2
Conductivity (μmhos)	505	520	494	481	503	500	500	518	480
pH	10.48	10.46	9.73	9.63	9.62	9.42	9.52	9.57	9.55
Turbidity	>999	>999	>999	>999	>999	>999	>999	192	>999
Dissolved Oxygen	0.46	0.89	0.66	0.76	1.20	0.96	1.02	9.45	1.08
Salinity (%)	0.2	0.2	0.1	0.1	0.2	0.2	0.2	0.2	0.2
Eh	NR	NR	NR	NR	NR	NR	100.2	82.9	82.0

NOTES:
Start 0955 hrs: Very silty dark grey.
HNu 0.2 background; S/N 901723
0.2 DH, BZ; span 9.02

WELL DEVELOPMENT LOG

Client: NORDIV, NAVFAC
Project Title: IR Program Site 09, Allen Harbor Landfill
Project No.: 29600.32
Staff: D. Acampora

Well No.: MW-20D; (1 gal/min)

1. Total Riser and Screen Length (ft)	62.50 TOC
2. Screen Internal Diameter (in.)	2
3. Water Level Below Measuring Point (ft)	14.82
4. Volume of Water in Well (gal) V = (1-3)*(5)	(47.68) (0.17) = 8.12

Screen ID	5. Volume/Ft (gal/ft)
1 in.	0.04
2 in.	0.17
4 in.	0.66
6 in.	1.50
8 in.	2.60

Parameters

	Surge		Surge						
Date	3/29/95	3/29/95	3/29/95	3/29/95	3/29/95	3/29/95	3/29/95	3/29/95	3/29/95
Total Gallons	72	80	88	96	104	112	120	128	136
Time (hrs)	1130	1137	1152	1204	1213	1225	1240	1253	1300
Temperature	13.9	13.8	14.1	14.2	13.9	14.1	13.9	14.0	14.1
Conductivity (μmhos)	495	489	497	497	512	516	517	519	524
pH	9.48	9.53	9.49	9.42	9.57	9.44	9.33	9.44	9.34
Turbidity	>999	>999	688*	747*	80.7	85.2	25.0	7.55	7.55
Dissolved Oxygen	1.01	1.16	1.77	0.93	2.20	1.59	0.17	1.31	1.58
Salinity (%)	0.2	0.1	0.2	0.2	0.2	0.2	0.2	0.2	0.2
Eh	77.5	86.4	69.9	80.7	76.90	68.2	69.0	70.6	73.0

NOTES:
* Readings taken with a Horiba U-10 samping device. All other turbidity readings were taken with a
HACH 2100P.

WELL DEVELOPMENT LOG

Client: NORDIV, NAVFAC
Project Title: IR Program Site 09, Allen Harbor Landfill
Project No.: 29600.32
Staff: J. Chon

Well No.: MW09-20R

1. Total Riser and Screen Length (ft)	82.58
2. Screen Internal Diameter (in.)	2
3. Water Level Below Measuring Point (ft)	15.30
4. Volume of Water in Well (gal) V = (1-3)*(5)	(67.20) (0.17) = 11.44

Screen ID	5. Volume/Ft (gal/ft)
1 in.	0.04
2 in.	0.17
4 in.	0.66
6 in.	1.50
8 in.	2.60

Parameters

Date	3/29/95	3/29/95	3/29/95	3/29/95	3/29/95	3/30/95	3/30/95	3/30/95	3/30/95
Total Gallons	0	11	19	22	30	31	36.5	42.0	47.5
Time (hrs)	1014	1211	1505	1520	1600	1604	1626	1648	1713
Temperature (°C)	13.4	12.6	14.1	13.2	12.4	12.8	12.4	11.9	11.3
Conductivity (μmhos)	664	1,060	1,270	1,330	1,350	NR	NR	NR	NR
pH	11.34	11.47	11.24	11.09	10.24	10.81	10.71	10.31	9.44
Turbidity (NTU)	192	12.4	10.2	5.31	28.0	3.53	9.34	21.2	NR
Dissolved Oxygen (mg/L)	3.82	2.66	4.17	3.13	7.20	4.94	4.37	5.45	5.43
Salinity (%)	0.2	0.4	0.5	0.6	0.6	0.6	0.6	0.6	0.6
Eh	59.6	45.7	47.8	52.8	85.6	121.9	70.1	135	NR

NOTES:
NR = No reading was taken.
1242 hrs: Dry after 18.0 gal. 1317 hrs: 73.04 ft to H_2O from TOC. 1500 hrs: 73.40 ft to H_2O from TOC.
1604 hrs: Dry after 30.0 gal - let it sit overnight in order to recharge 18.78 ft to H_2O from TOC.
3/30/95: Rainy - Last 2 readings fro H_2O quality are not as accurate - instruments getting wet.

WELL DEVELOPMENT LOG

Client: NORDIV, NAVFAC
Project Title: IR Program Site 09, Allen Harbor Landfill
Project No.: 29600.32
Staff: J. Chon

Well No.: MW09-20R

1. Total Riser and Screen Length (ft)	82.58
2. Screen Internal Diameter (in.)	2
3. Water Level Below Measuring Point (ft)	15.30
4. Volume of Water in Well (gal) V = (1-3)*(5)	(67.20) (0.17) = 11.44

Screen ID	5. Volume/Ft (gal/ft)
1 in.	0.04
2 in.	0.17
4 in.	0.66
6 in.	1.50
8 in.	2.60

Parameters

Date	4/02/95	4/02/95	4/02/95	4/02/95	4/02/95	4/03/95	4/03/95	4/03/95
Total Gallons	47.5	53.5	59.0	64.5	67.5	67.5	73.0	78.5
Time (hrs)	0945	1010	1032	1057	1117	1117	1135	1155
Temperature (°C)	11.9	12.0	11.9	12.0	12.1	13.4	12.9	13.3
Conductivity (μmhos)	594	600	598	639	641	607	600	599
pH	10.52	10.50	10.35	9.10	8.92	9.70	9.72	10.04
Turbidity (NTU)	11.8	11.8	30.2	30.7	30.7	51.3	12.6	52.3
Dissolved Oxygen (mg/L)	2.33	3.25	4.05	5.14	5.69	5.35	3.61	3.48
Salinity (%)	1.3	1.0	1.0	1.3	1.3	1.0	1.0	1.0
Eh	25.6	23.1	24.2	1.3	5.5	24.0	16.8	31.8

NOTES:
Well was bailed
1117 hrs: Well went dry; stopped bailing.
4/03/95: 1115 hrs: 14.35 ft to H_2O from TOC with bailer in well- totally recharged.

WELL DEVELOPMENT LOG

Client: NORDIV, NAVFAC
Project Title: IR Program Site 09, Allen Harbor Landfill
Project No.: 29600.32
Staff: J. Chon; J. Ropp

Well No.: MW09-20R

1. Total Riser and Screen Length (ft)	82.58
2. Screen Internal Diameter (in.)	2
3. Water Level Below Measuring Point (ft)	15.30
4. Volume of Water in Well (gal) V = (1-3)*(5)	11.44

Screen ID	5. Volume/Ft (gal/ft)
1 in.	0.04
2 in.	0.17
4 in.	0.66
6 in.	1.50
8 in.	2.60

Parameters

Surge

Date	4/03/95	4/03/95	4/03/95	4/03/95	4/04/95	4/04/95	4/04/95	4/04/95
Total Gallons	84.0	89.0	94.0	94.0	99.5	105.0	110.5	116.0
Time (hrs)	1225	1420	1447	0803	0821	0844	0915	1025
Temperature (°C)	13.1	14.1	14.4	11.9	11.7	11.0	11.8	11.2
Conductivity (μmhos)	660	1,440	1,600	597	598	592	589	602
pH	9.0	8.76	8.23	8.93	9.05	9.59	9.78	9.87
Turbidity (NTU)	18.4	15	NR	10.6	20.7	34.2	13.9	10.7
Dissolved Oxygen (mg/L)	4.45	4.71	8.20	3.75	3.91	3.52	4.65	7.71
Salinity (%)	1.0	0.06	0.07	0.08	0.08	0.08	0.08	0.08
Eh	14.1	51.5*	51.8*	18.7	13.9	27.2	7.0	12.0

WELL DEVELOPMENT LOG

NOTES:
* Readings taken with a Horiba U-10 sampling device. All other turbidity readings were taken with a HACH 2100P.
4/95: 1229 hrs: 79.03 ft to H_2O from TOC.
1447: Dry
4/95: Dry after 116.0 gal (22.0 gal = 2 well volume) 08:00 16.46 ft to H_2O from TOC; pH not dropping, not stabilizing.

WELL DEVELOPMENT LOG

Client: NORDIV, NAVFAC
Project Title: IR Program Site 09, Allen Harbor Landfill
Project No.: 29600.32
Staff: D. Acampora; J. Ropp

Well No.: MW-21D (approximately 1 gal/min)

1. Total Riser and Screen Length (ft)	46.96
2. Screen Internal Diameter (in.)	2
3. Water Level Below Measuring Point (ft)	9.48
4. Volume of Water in Well (gal) V = (1-3)*(5)	(37.48) (0.17) = 6.37

Screen ID	5. Volume/Ft (gal/ft)
1 in.	0.04
2 in.	0.17
4 in.	0.66
6 in.	1.50
8 in.	2.60

Parameters

	Surge				Surge		Surge		Surge
Date	3/30/95	3/30/95	3/30/95	3/30/95	3/30/95	3/30/95	3/30/95	3/30/95	3/30/95
Total Gallons	0	6	12	18	24	30	36	42	48
Time (hrs)	905	910	920	NR	944	952	1000	1004	1010
Temperature (°C)	10.2	11.4	10.9	11.6	12.0	11.07	11.9	12.1	12.4
Conductivity (μmhos)	8,270	6,460	2,130	982	863	838	767	769	766
pH	12.24	12.29	11.62	11.25	10.88	10.98	10.04	10.07	9.78
Turbidity (NTU)	73.2	73.8	73.2	98	42.9	NR	12	42.1	7.89
Dissolved Oxygen (mg/L)	9.04	0.65	1.58	1.52	0.52	1.00	0.79	1.02	1.47
Salinity (%)	4.4	3.4	1.0	0.4	0.3	0.3	0.3	0.3	0.3
Eh	27.2	16.0	126.5	139	89.5	75.3	49.8	45.3	33.7

NOTES:
NR = No reading was taken.
Water clean at about ½ gal. Surged at about 3 gal light grey color, sandy.

WELL DEVELOPMENT LOG

Client: NORDIV, NAVFAC
Project Title: IR Program Site 09, Allen Harbor Landfill
Project No.: 29600.32
Staff: D. Acampora; J. Ropp

Well No.: MW-21D

1. Total Riser and Screen Length (ft)	46.96
2. Screen Internal Diameter (in.)	2
3. Water Level Below Measuring Point (ft)	9.48
4. Volume of Water in Well (gal) V = (1-3)*(5)	(37.48) (0.17) = 6.37

Screen ID	5. Volume/Ft (gal/ft)
1 in.	0.04
2 in.	0.17
4 in.	0.66
6 in.	1.50
8 in.	2.60

Parameters

						Surge			
Date	3/30/95	3/30/95	3/30/95	3/30/95	3/30/95	3/30/95	3/30/95	3/30/95	3/30/95
Total Gallons	54	60	66	72	78	84	90	96	102
Time (hrs)	1015	1021	1028	1036	1046	1052	1059	1105	1111
Temperature (°C)	12.2	12.1	12.1	12.2	12.4	12.4	12.5	12.6	12.6
Conductivity (μmhos)	750	757	755	754	753	752	754	759	761
pH	9.74	9.52	9.39	9.27	9.14	9.06	9.22	8.95	8.91
Turbidity (NTU)	809	809	7.7	7.1	7.1	11.2	130	11	11
Dissolved Oxygen (mg/L)	0.40	1.05	0.94	0.64	1.09	0.68	0.58	0.65	1.10
Salinity (%)	0.3	0.3	0.3	0.3	0.3	0.3	0.3	0.3	0.3
Eh	28.9	16.6	8.4	5.3	8.4	10.8	8.6	6.3	10.9

NOTES:

WELL DEVELOPMENT LOG

Client: NORDIV, NAVFAC
Project Title: IR Program Site 09, Allen Harbor Landfill
Project No.: 29600.32
Staff: J. Chon

Well No.: MW-22S

1. Total Riser and Screen Length (ft)	11.50
2. Screen Internal Diameter (in.)	2
3. Water Level Below Measuring Point (ft)	3.12
4. Volume of Water in Well (gal) V = (1-3)*(5)	(8.38) (0.17) = 1.42 ~1.5

Screen ID	5. Volume/Ft (gal/ft)
1 in.	0.04
2 in.	0.17
4 in.	0.66
6 in.	1.50
8 in.	2.60

Parameters

Date	4/02/95	4/02/95	4/02/95	4/02/95	4/02/95	4/02/95	4/02/95	4/02/95	4/02/95
Total Gallons	0	3	6	9	12	15	18	21	24
Time (hrs)	1228	1237	1244	1254	1306	1322	1336	1351	1410
Temperature (°C)	7.70	8.20	8.50	9.40	8.8	9.6	9.2	9.6	8.6
Conductivity (μmhos)	532	412	435	469	454	469	432	460	460
pH	6.30	6.50	6.32	6.65	6.36	6.61	6.35	6.63	6.54
Turbidity (NTU)	>999	>999	224	547	132	177	140	149	>999
Dissolved Oxygen (mg/L)	2.10	1.86	2.00	2.32	2.40	2.54	3.57	2.63	2.52
Salinity (%)	0.4	0.4	0.4	0.4	0.4	0.4	0.4	0.4	0.4
Eh	28.1	29.4	30.5	31.3	15.2	19.2	11.3	11.6	11.3

NOTES:
H_2O quality taken every other well volume.
Surged well after each well volume. H_2O purged at an uneven rate, slow and fast.
1308 hrs: Stop pump, well went dry; wait 5 minutes; recharged; pumping well slower.
1358 hrs: Stop pump, well went dry; wait 5 minutes; recharged.

WELL DEVELOPMENT LOG

Client: NORDIV, NAVFAC
Project Title: IR Program Site 09, Allen Harbor Landfill
Project No.: 29600.32
Staff: J. Chon

Well No.: MW-22S

1. Total Riser and Screen Length (ft)	11.50
2. Screen Internal Diameter (in.)	2
3. Water Level Below Measuring Point (ft)	3.12
4. Volume of Water in Well (gal) V = (1-3)*(5)	(8.38) (0.17) = 1.42 ~1.5

Screen ID	5. Volume/Ft (gal/ft)
1 in.	0.04
2 in.	0.17
4 in.	0.66
6 in.	1.50
8 in.	2.60

Parameters

Date	4/02/95	4/02/95	4/02/95	4/02/95	4/02/95			
Total Gallons	25.5	27.0	28.5	30.0	31.5			
Time (hrs)	1415	1420	1425	1431	1438			
Temperature (°C)	9.1	9.7	9.2	9.3	9.6			
Conductivity (μmhos)	440	460	452	456	457			
pH	6.55	6.65	6.61	6.63	6.67			
Turbidity (NTU)	329	62.2	66.8	33.0	34.6			
Dissolved Oxygen (mg/L)	2.57	2.62	2.91	2.35	2.78			
Salinity (%)	0.4	0.4	0.4	0.4	0.4			
Eh	12.7	11.6	11.8	15.6	14.3			

NOTES:
H_2O quality stabilized with turbidity decreasing.

WELL DEVELOPMENT LOG

Client: NORDIV, NAVFAC
Project Title: IR Program Site 09, Allen Harbor Landfill
Project No.: 29600.32
Staff: J. Chon

Well No.: MW-23S

1. Total Riser and Screen Length (ft)	26.60
2. Screen Internal Diameter (in.)	2
3. Water Level Below Measuring Point (ft)	18.80
4. Volume of Water in Well (gal) V = (1-3)*(5)	(7.80) (0.17) = 1.33 (1)

Screen ID	5. Volume/Ft (gal/ft)
1 in.	0.04
2 in.	0.17
4 in.	0.66
6 in.	1.50
8 in.	2.60

Parameters

Date	4/04/95	4/04/95	4/04/95	4/04/95	4/04/95	4/04/95	4/05/95	4/05/95	4/05/95
Total Gallons	0	2	4	6	9	12	12	15	18
Time (hrs)	1436	1446	1456	1506	1515	1528	0933	0948	1003
Temperature (°C)	15.3	14.4	14.1	14.2	14.2	13.8	8.9	10.9	10.7
Conductivity (μmhos)	1,220	1,068	1,050	1,049	855	812	1,122	772	730
pH	6.76	7.01	6.86	7.04	6.93	7.07	6.79	7.11	6.89
Turbidity (NTU)	149	124	37.2	28.0	12.0	6.84	17.2	9.67	2.66
Dissolved Oxygen (mg/L)	0.81	0.79	0.71	0.92	0.60	0.66	0.71	0.96	0.94
Salinity (%)	206.0	60.0	45.0	42.0	35.0	30.0	108.0	25.0	20.0
Eh	6.5	6.0	22.6	15.9	23.8	46.8	14.4	57.9	43.2

NOTES:
Peristaltic pump used for purging.
1400 hrs: H_2O level readings taken.
4/05/95: Sunny with clouds; high of 30°F; very windy.

WELL DEVELOPMENT LOG

Client: NORDIV, NAVFAC
Project Title: IR Program Site 09, Allen Harbor Landfill
Project No.: 29600.32
Staff: J. Chon

Well No.: MW-23S

1. Total Riser and Screen Length (ft)	26.60
2. Screen Internal Diameter (in.)	2
3. Water Level Below Measuring Point (ft)	18.80
4. Volume of Water in Well (gal) V = (1-3)*(5)	(7.8) (0.17) = 1.33 (1)

Screen ID	5. Volume/Ft (gal/ft)
1 in.	0.04
2 in.	0.17
4 in.	0.66
6 in.	1.50
8 in.	2.60

Parameters

Date	4/05/95	4/05/95	4/05/95	4/05/95	4/05/95	4/05/95		
Total Gallons	21	24	27	30	33	36		
Time (hrs)	1018	1034	1050	1107	1128	1146		
Temperature (°C)	10.8	10.6	10.8	10.7	10.6	10.5		
Conductivity (μmhos)	701	682	675	668	658	648		
pH	6.94	7.05	6.92	7.02	6.95	6.94		
Turbidity (NTU)	1.28	0.92	1.00	0.47	0.71	0.74		
Dissolved Oxygen (mg/L)	1.43	1.39	1.48	1.47	1.38	1.43		
Salinity (%)	19.0	18.0	18.0	15.0	15.0	15.0		
Eh	93.1	100.7	101.4	111.8	113.4	112.3		

NOTES: 1150 hrs: Stop purging.
Eh, temperature °C, pH, salinity, and DO stabilized.
Conductivity and turbidity decreased. Total purge time: 5 hours, 8 minutes.

WELL DEVELOPMENT LOG

Client: NORDIV, NAVFAC
Project Title: IR Program Site 09, Allen Harbor Landfill
Project No.: 29600.32
Staff: J. Chon

Well No.: MW-23D

1. Total Riser and Screen Length (ft)	60.20
2. Screen Internal Diameter (in.)	2
3. Water Level Below Measuring Point (ft)	11.94
4. Volume of Water in Well (gal) V = (1-3)*(5)	(48.26) (0.17) = 8.2 (18)

Screen ID	5. Volume/Ft (gal/ft)
1 in.	0.04
2 in.	0.17
4 in.	0.66
6 in.	1.50
8 in.	2.60

Parameters

Date	4/05/95	4/05/95	4/05/95	4/05/95	4/05/95	4/05/95	4/05/95	4/06/95	4/06/95
Total Gallons	0	8	16	24	32	40	48	48	56
Time (hrs)	1432	1442	1503	1522	1605	1640	1701	0850	0856
Temperature (°C)	13.3	17.4	15.2	17.5	15.1	16.1	14.5	12.1	14.9
Conductivity (μmhos)	463	370	441	558	580	595	585	608	620
pH	10.84	10.07	7.50	7.47	7.07	7.76	6.99	7.18	7.20
Turbidity (NTU)	>999	>999	>999	>999	>999	>999	>999	>999	>999
Dissolved Oxygen (mg/L)	2.41	3.50	2.16	3.15	3.36	4.25	4.65	4.53	3.26
Salinity (%)	0.5	0.5	0.4	0.5	0.5	0.5	0.5	0.5	10.0
Eh	68.3	98.8	127.5	105.7	76.1	45.9	44.0	82.7	2.4

NOTES:
1535 hrs: Dry after 28 gal - wait for 25 minutes.
1555 hrs: Start purging.
4/5/95 Total purge time = 4 hours.
4/6/95 Total purge time = 7 hours.

WELL DEVELOPMENT LOG

Client: NORDIV, NAVFAC
Project Title: IR Program IR Program Site 09, Allen Harbor Landfill, Allen Harbor Landfill
Project No.: 29600.32
Staff: J. Chon

Well No.: MW-23D

1. Total Riser and Screen Length (ft)	60.20
2. Screen Internal Diameter (in.)	2
3. Water Level Below Measuring Point (ft)	11.94
4. Volume of Water in Well (gal) V = (1-3)*(5)	(48.26) (0.17) = 8.2

Screen ID	5. Volume/Ft (gal/ft)
1 in.	0.04
2 in.	0.17
4 in.	0.66
6 in.	1.50
8 in.	2.60

Parameters

Date	4/06/95	4/06/95	4/06/95	4/06/95	4/06/95	4/06/95	4/06/95	
Total Gallons	64	72	80	88	96	104	112	
Time (hrs)	0913	1005	1027	1251	1318	1352	1420	
Temperature (°C)	15.4	14.3	16.8	17.2	17.6	18.0	19.4	
Conductivity (μmhos)	800	1,950	1,470	2,220	1,750	2,580	2,620	
pH	7.06	7.03	6.97	6.94	6.73	6.90	6.94	
Turbidity (NTU)	>999	>999	>999	>999	>999	>999	843	
Dissolved Oxygen (mg/L)	1.92	5.53	2.95	3.95	2.87	2.30	2.47	
Salinity (%)	7.0	17.0	13.0	10.0	13.0	22.0	22.0	
Eh	11.7	17.9	87.1	-18.2	-74.7	-80.1	-91.9	

NOTES: 0935 hrs: Stop purging, wait for well to recharge 25 minutes.
1030 hrs: Stop purging, H_2O level 59.1 ft.
1100 hrs: H_2O level 29.1 ft.
1230: 18.56 ft to H_2O - 2 hours.
1237 hrs: Start pumping and surging entire H_2O column, purging at a slower rate.
1420 hrs: Stop purging per D. Street - drillers need to set outer casing and cement pad.

WELL DEVELOPMENT LOG

Client: NORDIV, NAVFAC
Project Title: IR Program Site 09, Allen Harbor Landfill
Project No.: 29600.32
Staff: J. Ropp; D. Acampora

Well No.: MW-24S (1/2 gal/min)

1. Total Riser and Screen Length (ft)	11.02
2. Screen Internal Diameter (in.)	2
3. Water Level Below Measuring Point (ft)	4.02
4. Volume of Water in Well (gal) V = (1-3)*(5)	(7) (0.17) = 1.19

Screen ID	5. Volume/Ft (gal/ft)
1 in.	0.04
2 in.	0.17
4 in.	0.66
6 in.	1.50
8 in.	2.60

Parameters

				Surge			Surge		
Date	3/31/95	3/31/95	3/31/95	3/31/95	3/31/95	3/31/95	3/31/95	3/31/95	3/31/95
Total Gallons	0	2	4	6	8	10	12	14	16
Time (hrs)	1045	1048	1053	1057	1102	1105	1107	1111	1115
Temperature (°C)	7.9	10.1	8.0	8.0	8.0	8.0	7.9	7.8	8.0
Conductivity (μmhos)	278	387	396	385	378	391	398	389	395
pH	7.51	7.25	7.10	7.03	7.04	7.00	7.04	7.04	7.02
Turbidity (NTU)	>999	>999	215	123	>999	150	130	NR	140
Dissolved Oxygen (mg/L)	1.43	0.51	0.64	0.52	0.51	0.42	0.46	0.76	0.70
Salinity (%)	0.1	0.1	0.1	0.1	0.1	0.1	0.1	0.1	0.1

NOTES:
NR = No reading was taken.
Start 1043 hrs: Medium grey silty water. HNu background 2.7, H_2O 2.7 ppm (rain earlier, clearing).
Water clears up quickly after each surge.

WELL DEVELOPMENT LOG

Client: NORDIV, NAVFAC
Project Title: IR Program Site 09, Allen Harbor Landfill
Project No.: 29600.32
Staff: J. Ropp, D. Acampora

Well No.: MW-24S (1 gal/min)

1. Total Riser and Screen Length (ft)	11.02
2. Screen Internal Diameter (in.)	2
3. Water Level Below Measuring Point (ft)	4.02
4. Volume of Water in Well (gal) V = (1-3)*(5)	(7) (0.17) = 1.19

Screen ID	5. Volume/Ft (gal/ft)
1 in.	0.04
2 in.	0.17
4 in.	0.66
6 in.	1.50
8 in.	2.60

Parameters

	Surge			Surge				Surge	
Date	3/31/95	3/31/95	3/31/95	3/31/95	3/31/95	3/31/95	3/31/95	3/31/95	3/31/95
Total Gallons	18	20	22	24	26	28	30	32	34
Time (hrs)	1120	1124	1128	1132	1136	1140	1145	1150	1155
Temperature (°C)	8.3	9.2	8.1	8.4	8.3	8.0	8.1	8.2	8.4
Conductivity (μmhos)	390	385	405	400	389	406	400	395	392
pH	6.99	6.94	7.02	7.03	6.95	7.01	6.98	7.00	7.05
Turbidity (NTU)	96.4	>999	100	67.2	>999	121	58.0	30	409
Dissolved Oxygen (mg/L)	0.90	0.62	0.39	0.92	0.58	0.65	0.74	1.38	1.12
Salinity (%)	0.1	0.1	0.1	0.1	0.1	0.1	0.1	0.1	0.1

NOTES:
HNu 2.0 ppm - same as background.
Water light grey color after each surge. Clears within a minute, contains some fine sand grains.

WELL DEVELOPMENT LOG

Client: NORDIV, NAVFAC
Project Title: IR Program Site 09, Allen Harbor Landfill
Project No.: 29600.32
Staff: J. Ropp; D. Acampora

Well No.: MW-24S

1. Total Riser and Screen Length (ft)	11.02
2. Screen Internal Diameter (in.)	2
3. Water Level Below Measuring Point (ft)	4.02
4. Volume of Water in Well (gal) V = (1-3)*(5)	(7) (0.17) = 1.19

Screen ID	5. Volume/Ft (gal/ft)
1 in.	0.04
2 in.	0.17
4 in.	0.66
6 in.	1.50
8 in.	2.60

Parameters

		Surge			Surge				
Date	3/31/95	3/31/95	3/31/95	3/31/95	3/31/95	3/31/95	3/31/95	3/31/95	3/31/95
Total Gallons	36	38	40	42	44	46	48	50	52
Time (hrs)	1158	1200	1205	1210	1213	1215	1220	1225	1230
Temperature (°C)	8.2	8.1	8.0	8.0	8.0	7.9	8.0	8.4	8.5
Conductivity (μmhos)	399	402	391	398	395	385	398	397	402
pH	7.04	7.02	7.00	7.08	7.06	6.97	6.97	6.99	7.06
Turbidity (NTU)	66.5	40.3	>999	77	23.7	540	49.4	19.7	19.7
Dissolved Oxygen (mg/L)	0.55	0.60	0.74	0.58	0.50	0.51	0.34	0.47	0.41
Salinity (%)	0.1	0.1	0.1	0.1	0.1	0.1	0.1	0.1	0.1
Eh	NR	NR	NR	-151.4	136.1	128.1	-127.1	-124.0	-118.2

NOTES:

WELL DEVELOPMENT LOG

Client: NORDIV, NAVFAC
Project Title: IR Program Site 09, Allen Harbor Landfill
Project No.: 29600.32
Staff: J. Ropp; D. Acampora

Well No.: MW-24S

1. Total Riser and Screen Length (ft)	11.02
2. Screen Internal Diameter (in.)	2
3. Water Level Below Measuring Point (ft)	4.02
4. Volume of Water in Well (gal) V = (1-3)*(5)	(7) (0.17) = 1.19

Screen ID	5. Volume/Ft (gal/ft)
1 in.	0.04
2 in.	0.17
4 in.	0.66
6 in.	1.50
8 in.	2.60

Parameters

Date	3/31/95								
Total Gallons	100								
Time (hrs)	1304								
Temperature (°C)	8.1								
Conductivity (μmhos)	378								
pH	7.13								
Turbidity (NTU)	20.3								
Dissolved Oxygen (mg/L)	0.69								
Salinity (%)	0.1								
Eh	-116.3								

NOTES:

WELL DEVELOPMENT LOG

Client: NORDIV, NAVFAC
Project Title: IR Program Site 09, Allen Harbor Landfill
Project No.: 29600.32
Staff: J. Chon

Well No.: MW-24D

1. Total Riser and Screen Length (ft)	25.55
2. Screen Internal Diameter (in.)	2
3. Water Level Below Measuring Point (ft)	6.150
4. Volume of Water in Well (gal) V = (1-3)*(5)	(19.4) (0.17) = 3.3

Screen ID	5. Volume/Ft (gal/ft)
1 in.	0.04
2 in.	0.17
4 in.	0.66
6 in.	1.50
8 in.	2.60

Parameters

Date	4/07/95	4/07/95	4/07/95	4/07/95	4/07/95	4/07/95	4/07/95	4/07/95	4/07/95
Total Gallons	0	3	6	9	12	15	18	21	24
Time (hrs)	0854	0906	0915	0952	1035	1052	1123	1149	1225
Temperature (°C)	11.1	13.6	14.0	15.3	11.4	11.8	12.7	12.3	12.9
Conductivity (μmhos)	453	515	422	346	332	330	329	328	325
pH	9.24	9.04	7.91	7.15	7.34	7.41	7.42	7.53	7.46
Turbidity (NTU)	>999	>999	>999	>999	>999	76.9	6.50	1.47	0.78
Dissolved Oxygen (mg/L)	2.19	2.70	3.04	7.23	4.73	5.43	6.45	7.06	6.41
Salinity (%)	0.3	0.3	0.3	0.3	0.3	0.3	0.3	0.3	0.3
Eh	-85.3	-130.4	-103.1	30.3	29.5	19.7	89.0	113.9	112.9

NOTES:
Silty charcoal colored H_2O - pumped at lowest speed possible (approximately 0.25 to 0.5 gpm)
0915 hrs: Stop. Well dry after 6 gal. 0935 hrs: Start purging.
0952 hrs: Stop. Well dry after 9 gal. 1020 hrs: Start purging with peristaltic pump.
Even with peristaltic pump, well goes somewhat dry and pulls little H_2O.

APPENDIX F

PHASE III RI FIELD SAMPLING FORMS

Field Sampling Form

Project Name: NCBC Davisville IR Program Site 09 Project No.: 29600.32 Task: 3241 Date: 04/13/95
Well ID: MW-9S Personnel: J. Shapiro Start Time: 1430 Finish Time: 1515

Air Monitoring
Equipment Used (Make/Model/Serial No.): HNu 101, 11.7eV, S/N, 901723
Calibration Information: 70 ppm w 100 ppm isobutylene, SPAN = 6.18
Ambient Air Reading: 2.0 ppm Well Headspace Reading: 2.6 ppm

Well Data/Integrity
Well Locked X Yes __ No
Protective Casing Secure __ Yes __ No
Concrete Collar Intact __ Yes __ No
Other: _____
Protective Casing Stick-Up (ft): _____
Casing/Well Difference (ft): _____

Well Material: X PVC / __ SS / Other_____
Well Diameter: X 2-in. / __ 4-in. / __ 6-in. / Other_____
Water Level Equip. Used: __ Elect. Cond. Probe
__ Interface Probe
__ Press. Transducer
__ _____
__ _____

Water L vel Data
Measured from: Top of Riser

Depth to Bottom of Well: 27.91 (ft)
Depth to Top of Water: 17.52 (ft)
Height of Water Column: 10.39 (ft)

X

Volume/ft Gal/ft (Well ID)
__0.04 (1 in.) __1.04 (5 in.)
X0.17 (2 in.) __1.50 (6 in.)
__0.38 (3 in.) __2.60 (8 in.)
__0.66 (4 in.)

=

Gallons/Well Volume: 1.8

Purge Data Sample Collected Using: __ Bailer / X Pump / Other_____

Parameter	Initial	Volume 1	Volume 2	Volume 3	Volume 4	Volume __	Volume __
Gallons	0	2.5	6	8	10		
Time (hrs)	1450	1455	1500	1503	1506		
Temperature (°C)	15.3	14.7	13.7	13.7	13.2		
pH	6.54	6.62	6.62	6.63	6.67		
Conductivity	1,740	1,350	1,330	1,330	1,350		
DO (ppm)	11.99	12.23	12.56	12.57	12.51		
Turbidity (NTUs)	38.1	4.48	2.10	2.28	1.77		
Odor	Sulfur						
Salinity/Eh	0.8/-152.6	0.6/-168.6	0.6/-168.8	0.5/-167.0	0.06/-164.6		

Sample Collection

Analytical Parameter	X if Field Filtered	Volume Required/ Sample Container	Sample ID	Preservation Method
1515 collected sample and dup; pH not low enough in VOAs, recollected in vials with greater amount HCl				
TCL, VOC		4 VOA		
Na+Sodium		2 500-ml poly		
TDS, Cl, salinity		1 500-ml poly		

Equipment Decon Identify equipment used (i.e., pumps, bailers, tubing, filters, etc.)

P = Purge S = Sample		Equipment Used	Decon Method
P	S	Grundfos pump	Isopropanol, Distilled water
P	S	(Dedicated) teflon-lined polyethylene tubing	N/A
P	S		
P	S		

NOTES:

Fi ld Sampling Form

Project Name : NCBC Davisville IR Program Site 09 Project No.: 29600.32 Task: 3241 Date: 04/07/95
Well ID: MW-2S Personnel: DS, JF, JDR, J. Shapiro Start Time: 1120 Finish Time: 1215

Air Monitoring
Equipment Used (Make/Model/Serial No.): _____
Calibration Information: _____
Ambient Air Reading: 1 ppm Well Headspace Reading: 2.4 ppm

Well Data/Integrity

Well Locked	X Yes __ No	Well Material:	X PVC / __ SS / Other_____
Protective Casing Secure	X Yes __ No	Well Diameter:	X 2-in. / __ 4-in. / __ 6-in. / Other_____
Concrete Collar Intact	X Yes __ No	Water Level Equip. Used:	__ Elect. Cond. Probe
Other: _____			__ Interface Probe
Protective Casing Stick-Up (ft): _____			__ Press. Transducer
Casing/Well Difference (ft): _____			__ _____

Water L vel Data
Measured from: Top of PVC

Depth to Bottom of Well: 16.02 (ft)
Depth to Top of Water: 7.61 (ft)
Height of Water Column: 8.41 (ft)

X

Volume/ft Gal/ft (Well ID)

__0.04 (1 in.) __1.04 (5 in.)
X 0.17 (2 in.) __1.50 (6 in.)
__0.38 (3 in.) __2.60 (8 in.)
__0.66 (4 in.)

=

Gallons/Well Volume: 1.43

Purge Data Sample Collected Using: __ Bailer / X Pump / Other_____

Parameter	Initial	Volume 1	Volume 2	Volume 3	Volume __	Volume __	Volume __
Gallons	0	2	3.5	5			
Time (hrs)	1145	1149	1157	1206			
Temperature (°C)	7.5	7.7	8.6	9.2			
pH	6.53	6.61	6.65	6.61			
Conductivity	660	678	666	638			
DO (ppm)	5.60	11.27	10.21	6.11			
Turbidity (NTUs)	367	>999	49	150			
Odor							
Salinity/Eh	0.2/+58.3	0.2/+65.0	0.2/+73.4	0.2/+84.6			
HNu (bkgd 1.4)		4 ppm					

Sample Collection

Analytical Parameter	X if Field Filtered	Volume Required/ Sample Container	Sample ID	Preservation Method
TCL, VOC				
Sodium				
TDS, Cl, Salinity				

Equipment Decon Identify equipment used (i.e., pumps, bailers, tubing, filters, etc.)

P = Purge S = Sample		Equipment Used	Decon Method
P	S	Grundos pump	Isopropyl/Distilled Water
P	S	(Dedicated) teflon-lined polyethylene tubing	N/A
P	S		
P	S		
P	S		

NOTES: Interface probe not working.

Field Sampling Form

Project Name: NCBC Davisville IR Program Site 09 Project No.: 29600.32 Task : 3241 Date: 04/07/95
Well ID: MW-9-1S Personnel: DS, JF, JDR, JS Start Time: 0900 Finish Time: 1000

Air Monitoring
Equipment Used (Make/Model/Serial No.): Hnu
Calibration Information: _____
Ambient Air Reading: 1 ppm Well Headspace Reading: 20 ppm

Well Data/Integrity

Well Locked	X Yes __ No	Well Material:	X PVC / __ SS / Other_____
Protective Casing Secure	X Yes __ No	Well Diameter:	X 2-in. / __ 4-in. / __ 6-in. / Other_____
Concrete Collar Intact	X Yes __ No	Water Level Equip. Used:	__ Elect. Cond. Probe
Other: _____			X Interface Probe
Protective Casing Stick-Up (ft): _____			__ Press. Transducer
Casing/Well Difference (ft): _____			__ _____
			__ _____

Water Level Data
Measured from: Top of PVC

Depth to Bottom of Well: 15.61 (ft)
Depth to Top of Water: 6.83 (ft)
Height of Water Column: 8.78 (ft)

X

Volume/ft Gal/ft (Well ID)

__0.04 (1 in.) __1.04 (5 in.)
X 0.17 (2 in.) __1.50 (6 in.)
__0.38 (3 in.) __2.60 (8 in.)
__0.66 (4 in.)

=

Gallons/Well Volume: 1.5

Purge Data Sample Collected Using: __ Bailer / X Pump / Other_____

Parameter	Initial	Volume 1	Volume 2	Volume 3	Volume 4	Volume 5	Volume __
Gallons	0	3	6	9	10.5	12	
Time(hrs)		0915	0920	0930	0935	0940	
Temperature (°C)		8.4	8.8	9.0	8.7	8.3	
pH		7.07	7.01	7.01	7.00	6.94	
Conductivity		785	779	767	776	746	
DO (ppm)		0.74	10.64	2.73	10.39	3.04	
Turbidity (NTUs)		351	18.5	6.06	66	5.41	
Odor		0.3	0.3	0.3	0.3	0.3	
Salinity/Eh		0.3/-99.7	0.3/-96.3	0.3/-97.2	0.3/-105.3	0.3/-91.2	

Sample Collection

Analytical Parameter	X if Field Filtered	Volume Required/ Sample Container	Sample ID	Preservation Method
TCL, VOC				
Na+Sodium				
TDS,Cl, Salinity				

Equipment Decon Identify equipment used (i.e., pumps, bailers, tubing, filters, etc.)

P = Purge S = Sample		Equipment Used	Decon Method
P	S	Grundos pump	Isopropyl/Distilled Water
P	S	(Dedicated) teflon-lined polyethylene tubing	N/A
P	S		
P	S		
P	S		

NOTES:

Field Sampling Form

Project Name: NCBC Davisville IR Program Site 09 Project No.: 29600.32 Task: 3241 Date: 04/07/95
Well ID: MW-3D Personnel: JF, JDR, DS, J. Shapiro Start Time: 1400 Finish Time: 1500

Air Monitoring
Equipment Used (Make/Model/Serial No.): _____
Calibration Information: JF, JDR
Ambient Air Reading: 1 ppm Well Headspace Reading: 36 ppm

Well Data/Integrity

Well Locked	X Yes __ No	Well Material:	X PVC / __ SS / Other_____
Protective Casing Secure	X Yes __ No	Well Diameter:	X 2-in. / __ 4-in. / __ 6-in. / Other_____
Concrete Collar Intact	X Yes __ No	Water Level Equip. Used:	__ Elect. Cond. Probe
Other: _____			__ Interface Probe
Protective Casing Stick-Up (ft): _____			__ Press. Transducer
Casing/Well Difference (ft): _____			__ _____
			__ _____

Water L vel Data
Measured from: Top of PVC

Depth to Bottom of Well: 37.31 (ft)
Depth to Top of Water: 7.02 (ft)
Height of Water Column: 30.29 (ft)

X

Volume/ft Gal/ft (Well ID)

__0.04 (1 in.) __1.04 (5 in.)
X 0.17 (2 in.) __1.50 (6 in.)
__0.38 (3 in.) __2.60 (8 in.)
__0.66 (4 in.)

=

Gallons/Well Volume: 5.15

Purge Data Sample Collected Using: __ Bailer / __ Pump / Other_____

Parameter	Initial	Volume 1	Volume 2	Volume 3	Volume __	Volume __	Volume __
Gallons	0	5	10	15			
Time (hrs)	1404	1412	1425	1445			
Temperature (°C)	10.5	12.0	12.5	11.8			
pH	6.46	6.42	6.42	6.39			
Conductivity	587	595	574	571			
DO (ppm)	2.29	9.77	2.32	2.76			
Turbidity (NTUs)	202	102	13.6	4.46			
Odor							
Salinity/Eh	0.2/+59.7	0.2/+52.1	0.2/+54.3	0.2/+71.1			
HNu				0 ppm			

Sample Collection

Analytical Parameter	X if Field Filtered	Volume Required/ Sample Container	Sample ID	Preservation Method
TCL, VOC				
Sodium				
Na+Sodium				
TDS, Cl, salinity				

Equipment Decon Identify equipment used (i.e., pumps, bailers, tubing, filters, etc.)

P = Purge S = Sample		Equipment Used	Decon Method
P	S	Grundos pump	Isopropyl/Distilled Water
P	S	(Dedicated) teflon-lined polyethylene tubing	N/A
P	S		
P	S		
P	S		

NOTES: Pumped dry at 8 gal - let it recharge. Pumped dry at 12 gal - let it recharge.

Field Sampling F rm

Project Name: NCBC Davisville IR Program Site 09 Project No.: 29600.32 Task: 3241 Date: 04/07/95
Well ID: MW-9-4S Personnel: JF, JDR Start Time: 0320 Finish Time: 1600

Air Monit ring
Equipment Used (Make/Model/Serial No.): _____
Calibration Information: _____
Ambient Air Reading: 0.5 ppm Well Headspace Reading: 5.5 ppm

Well Data/Integrity

Well Locked	X Yes __ No	Well Material:	X PVC / __ SS / Other_____
Protective Casing Secure	X Yes __ No	Well Diameter:	X 2-in. / __ 4-in. / __ 6-in. / Other_____
Concrete Collar Intact	X Yes __ No	Water Level Equip. Used:	__ Elect. Cond. Probe
Other: _____			__ Interface Probe
Protective Casing Stick-Up (ft): _____			__ Press. Transducer
Casing/Well Difference (ft): _____			__ _____
			__ _____

Water L vel Data
Measured from: Top of PVC

Depth to Bottom of Well: 15.33 (ft)
Depth to Top of Water: 9.27 (ft)
Height of Water Column: 6.06 (ft)

X

Volume/ft
Gal/ft (Well ID)

__0.04 (1 in.) __1.04 (5 in.)
X 0.17 (2 in.) __1.50 (6 in.)
__0.38 (3 in.) __2.60 (8 in.)
__0.66 (4 in.)

=

Gallons/Well Volume: 1.03

Purge Data Sample Collected Using: __ Bailer / __ Pump / Other_____

Parameter	Initial	Volume 1	Volume 2	Volume 3	Volume __	Volume __	Volume __
Gallons	0	1	2	3			
Time	1549	1552	1555	1558			
Temperature (°C)	10.2	9.7	9.6	9.6			
pH	5.93	6.00	6.04	6.02			
Conductivity	54	57	56	56			
DO (ppm)	4.58	4.90	5.22	5.46			
Turbidity (NTUs)	>999	38.3	16.1	13.2			
Odor							
Salinity/Eh	0.0/+58.8	0.0/+35.8	0.0/+44.6	0.0/+50.5			

Sample Collection

Analytical Parameter	X if Field Filtered	Volume Required/ Sample Container	Sample ID	Preservation Method
TCL, VOC				
Na+Sodium				
TDS, Cl, salinity				

Equipment Decon Identify equipment used (i.e., pumps, bailers, tubing, filters, etc.)

P = Purge S = Sample		Equipment Used	Decon Method
P	S	Grundfos pump	Isopropanol, Distilled water
P	S	(Dedicated) teflon-lined	N/A
P	S	polyethylene tubing	
P	S		

NOTES:

Fi ld Sampling Form

Project Name: NCBC Davisville IR Program Site 09 Project No.: 29600.32 Task: 3241 Date: 04/16/95
Well ID: MW-5S Personnel: J. Shapiro, J. Friesen Start Time: 1520 Finish Time : 1700

Air Monitoring
Equipment Used (Make/Model/Serial No.): Hnu 101, 11.7 eV, S/N 501027
Calibration Information: 70 ppm with 100 ppm isobutylene; Span = 0.12
Ambient Air Reading: 3 ppm Well Headspace Reading: 80 ppm

Well Data/Integrity

Well Locked	X Yes __ No	Well Material:	X PVC / __ SS / Other_____
Protective Casing Secure	X Yes __ No	Well Diameter:	X 2-in. / __ 4-in. / __ 6-in. / Other_____
Concrete Collar Intact	X Yes __ No	Water Level Equip. Used:	X Elect. Cond. Probe
Other: _____			__ Interface Probe
Protective Casing Stick-Up (ft): _____			__ Press. Transducer
Casing/Well Difference (ft): _____			__ _____
			__ _____

Water L v l Data
Measured from: Top of PVC

Depth to Bottom of Well: 17.96 (ft)
Depth to Top of Water: 10.20 (ft)
Height of Water Column: 7.76 (ft)

X

Volume/ft
Gal/ft (Well ID)

__0.04 (1 in.) __1.04 (5 in.)
X 0.17 (2 in.) __1.50 (6 in.)
__0.38 (3 in.) __2.60 (8 in.)
__0.66 (4 in.)

=

Gallons/Well Volume: 1.3

Purge Data Sample Collected Using: __ Bailer / X Pump / Other_____

Parameter	Initial	Volume 1	Volume 2	Volume 3	Volume __	Volume __	Volume __
Gallons	0	3	4	5			
Time (hrs)	1525	1535	1555	1600			
Temperature (°C)	10.0	10.6	11.2	10.0			
pH	6.72	6.87	6.71	6.93			
Conductivity	570	611	611	613			
DO (ppm)	12.04	11.60	10.98	11.31			
Turbidity (NTUs)	>999	604	167	204			
Odor	*	*	*	*			
Salinity/Eh	0.2/-0.67	0.2/-135.1	0.2/-129.8	0.2/-129.3			

* Wore respirator.

Sample Collection

Analytical Parameter	X if Field Filtered	Volume Required/ Sample Container	Sample ID	Preservation Method
1515 collected sample and dup; pH not low enough in VOAs, recollected in vials with greater amount HCl				
TCL, VOC				
Na+Sodium				
TDS, Cl, salinity				

Equipment Decon Identify equipment used (i.e., pumps, bailers, tubing, filters, etc.)

P = Purge S = Sample		Equipment Used	Decon Method
P	S	Grundfos pump	Isopropanol, Distilled water
P	S	(Dedicated) teflon-lined polyethylene tubing	N/A
P	S		
P	S		

NOTES: First 3 gal were rust-colored coagulated material; orange consistently, although not as high concentration solids. Well pumped dry after approximately 4 gal - will let recharge. Pumped 2 vol. shut off pump; pumped third volume.

Field Sampling Form

Project Name: NCBC Davisville IR Program Site 09 Project No.: 29600.32 Task: 3241 Date: 04/14/95
Well ID: MW-6S Personnel: JDR, JPS Start Time: 0950 Finish Time: 0951

Air Monitoring
Equipment Used (Make/Model/Serial No.): _____
Calibration Information: _____
Ambient Air Reading: ____ ppm Well Headspace Reading: ____ ppm

Well Data/Integrity

Well Locked	X Yes __ No	Well Material:	X PVC / __ SS / Other_____
Protective Casing Secure	X Yes __ No	Well Diameter:	X 2-in. / __ 4-in. / __ 6-in. / Other_____
Concrete Collar Intact	X Yes __ No	Water Level Equip. Used:	__ Elect. Cond. Probe
Other: _____			X Interface Probe
Protective Casing Stick-Up (ft): _____			__ Press. Transducer
Casing/Well Difference (ft): _____			__ _____
			__ _____

Water Level Data
Measured from: Top of PVC

Depth to Bottom of Well: ____ (ft)
Depth to Top of Water: DRY (ft)
Height of Water Column: ____ (ft)

X

Volume/ft
Gal/ft (Well ID)

__0.04 (1 in.) __1.04 (5 in.)
X 0.17 (2 in.) __1.50 (6 in.)
__0.38 (3 in.) __2.60 (8 in.)
__0.66 (4 in.)

= Gallons/Well Volume:

Purge Data Sample Collected Using: __ Bailer / X Pump / Other_____

Parameter	Initial	Volume 1	Volume 2	Volume 3	Volume __	Volume __	Volume __
Gallons	0						
Time (hrs)							
Temperature (°C)							
pH							
Conductivity	DRY						
DO (ppm)							
Turbidity (NTUs)	DRY						
Odor							
Salinity/Eh							

Sample Collection

Analytical Parameter	X if Field Filtered	Volume Required/ Sample Container	Sample ID	Preservation Method
1515 collected sample and dup; pH not low enough in VOAs, recollected in vials with greater amount HCl				
TCL, VOC				
Na+Sodium				
TDS, Cl, salinity				

Equipment Decon Identify equipment used (i.e., pumps, bailers, tubing, filters, etc.)

P = Purge S = Sample		Equipment Used	Decon Method
P	S	Grundfos pump	Isopropanol, Distilled water
P	S	(Dedicated) teflon-lined polyethylene tubing	N/A
P	S		
P	S		

NOTES:

Fi ld Sampling Form

Project Name: NCBC Davisville IR Program Site 09 Project No.: 29600.32 Task: 3241 Date: 04/14/95
Well ID: MW-6S Personnel: JDR, JPS Start Time: 0950 Finish Time: 0951

Air Monitoring
Equipment Used (Make/Model/Serial No.): _____
Calibration Information: _____
Ambient Air Reading: ____ ppm Well Headspace Reading: ____ ppm

Well Data/Integrity

Well Locked	X Yes __ No	Well Material:	X PVC / __ SS / Other_____
Protective Casing Secure	X Yes __ No	Well Diameter:	X 2-in. / __ 4-in. / __ 6-in. / Other_____
Concrete Collar Intact	X Yes __ No	Water Level Equip. Used:	__ Elect. Cond. Probe
Other: _____			X Interface Probe
Protective Casing Stick-Up (ft): _____			__ Press. Transducer
Casing/Well Difference (ft): _____			__ _____
			__ _____

Water Level Data
Measured from: Top of PVC

Depth to Bottom of Well: ____ (ft)
Depth to Top of Water: DRY (ft)
Height of Water Column: ____ (ft)

X

Volume/ft
Gal/ft (Well ID)

__0.04 (1 in.) __1.04 (5 in.)
X 0.17 (2 in.) __1.50 (6 in.)
__0.38 (3 in.) __2.60 (8 in.)
__0.66 (4 in.)

= Gallons/Well Volume:

Purge Data Sample Collected Using: __ Bailer / X Pump / Other_____

Parameter	Initial	Volume 1	Volume 2	Volume 3	Volume __	Volume __	Volume __
Gallons	0						
Time (hrs)							
Temperature (°C)							
pH							
Conductivity	DRY						
DO (ppm)							
Turbidity (NTUs)	DRY						
Odor							
Salinity/Eh							

Sample Collection

Analytical Parameter	X if Field Filtered	Volume Required/ Sample Container	Sample ID	Preservation Method
1515 collected sample and dup; pH not low enough in VOAs, recollected in vials with greater amount HCl				
TCL, VOC				
Na+Sodium				
TDS, Cl, salinity				

Equipment Decon Identify equipment used (i.e., pumps, bailers, tubing, filters, etc.)

P = Purge S = Sample		Equipment Used	Decon Method
P	S	Grundfos pump	Isopropanol, Distilled water
P	S	(Dedicated) teflon-lined polyethylene tubing	N/A
P	S		
P	S		
P	S		

NOTES: _____

Field Sampling Form

Project Name: NCBC Davisville IR Program Site 09 Project No.: 29600.32 Task: 3241 Date: 04/14/95
Well ID: MW-6D Personnel: JDR, JPS Start Time: 0952 Finish Time: 1100

Air Monitoring
Equipment Used (Make/Model/Serial No.): HNu PI101, 901723
Calibration Information: SPAN = 8.37
Ambient Air Reading: 3 ppm Well Headspace Reading: 3 ppm

Well Data/Integrity

Well Locked	X Yes __ No	Well Material:	X PVC / __ SS / Other_____
Protective Casing Secure	X Yes __ No	Well Diameter:	X 2-in. / __ 4-in. / __ 6-in. / Other_____
Concrete Collar Intact	X Yes __ No	Water Level Equip. Used:	__ Elect. Cond. Probe
Other: _____			X Interface Probe
Protective Casing Stick-Up (ft): _____			__ Press. Transducer
Casing/Well Difference (ft): _____			__ _____
			__ _____

Water Lev l Data
Measured from: Top of PVC

Depth to Bottom of Well: 69.80 (ft)
Depth to Top of Water: 20.73 (ft)
Height of Water Column: 49.07 (ft)

X

Volume/ft Gal/ft (Well ID)

__0.04 (1 in.) __1.04 (5 in.)
X 0.17 (2 in.) __1.50 (6 in.)
__0.38 (3 in.) __2.60 (8 in.)
__0.66 (4 in.)

=

Gallons/Well Volume: 8.34

Purge Data Sample Collected Using: __ Bailer / X Pump / Other_____

Parameter	Initial	Volume 1	Volume 2	Volume 3	Volume __	Volume __	Volume __
Gallons	0	8	16	24			
Time (hrs)	1014	1027	1040	1055			
Temperature (°C)	11.4	12.7	13.7	13.4			
pH	7.64	6.85	6.80	6.77			
Conductivity	135	154	147	150			
DO (ppm)	1.57	1.16	1.22	1.16			
Turbidity (NTUs)	>999	757	159	91.9			
Odor							
Salinity/Eh (Orion)	0.0/-74.2	0.0/-76.6	0.0/-79.1	0.0/-68.6			

Sample Collection

Analytical Parameter	X if Field Filtered	Volume Required/ Sample Container	Sample ID	Preservation Method
1515 collected sample and dup; pH not low enough in VOAs, recollected in vials with greater amount HCl				
TCL, VOC				
Na+Sodium				
TDS, Cl, salinity				

Equipment Decon Identify equipment used (i.e., pumps, bailers, tubing, filters, etc.)

P = Purge S = Sample		Equipment Used	Decon Method
P	S	Grundfos pump	Isopropanol, Distilled water
P	S	(Dedicated) teflon-lined polyethylene tubing	N/A
P	S		
P	S		

NOTES:

Fi ld Sampling Form

Project Name: NCBC Davisville IR Program Site 09 Project No.: 29600.32 Task: 3241 Date: 04/11/95
Well ID: MW-7I Personnel: J. Shapiro, J. Friesen Start Time: 1220 Finish Time: 1500

Air Monitoring
Equipment Used (Make/Model/Serial No.): HNu 101, 11.7CU, S/N, 901723
Calibration Information: 70 ppm w 100 ppm isobutylene, SPAN = 6.63
Ambient Air Reading: 1 ppm Well Headspace Reading: 18.6 ppm

Well Data/Integrity
Well Locked X Yes __ No
Protective Casing Secure X Yes __ No
Concrete Collar Intact X Yes __ No
Other: _____
Protective Casing Stick-Up (ft): _____
Casing/Well Difference (ft): _____

Well Material: X PVC / __ SS / Other_____
Well Diameter: X 2-in. / __ 4-in. / __ 6-in. / Other_____
Water Level Equip. Used: __ Elect. Cond. Probe
__ Interface Probe
__ Press. Transducer
__ _____
__ _____

Water Lev l Data
Measured from: Top of Riser

Depth to Bottom of Well: 36.75 (ft)
Depth to Top of Water: 15.65 (ft)
Height of Water Column: 21.1 (ft)

X

Volume/ft
Gal/ft (Well ID)

__0.04 (1 in.) __1.04 (5 in.)
X 0.17 (2 in.) __1.50 (6 in.)
__0.38 (3 in.) __2.60 (8 in.)
__0.66 (4 in.)

=

Gallons/Well Volume: 3.6

Purge Data Sample Collected Using: __ Bailer / x Pump / Other_____

Parameter	Initial	Volume 1	Volume 2	Volume 3	Volume 4	Volume	Volume 5	Volume 6
Gallons	0	3.5	7.0	10.5	14.0	Init.	17.5	21.0
Time	1220	1225	1231	1240	1255	1445	1450	1455
Temperature (°C)	14.9	13	13.4	14.4	13.3	12.6	13.3	13.1
pH	6.7	6.99	6.91	6.95	6.94	6.76	6.89	6.80
Conductivity	800	800	800	390	830	800	800	800
DO (ppm)	1.66	1.06	1.10	2.14	2.76	2.06	1.94	1.60
Turbidity (NTUs)	77.5	302	83.0	124	36.4	59.6	20.5	73.9
Odor	Solvent	Solvent	Solvent	Solvent	Solvent	Solvent	Solvent	Solvent
Salinity/Eh	0.8/-54.5	0.8/-65.2	0.8/-70.9	0.5/-93.9	0.8/-89.2	0.8/-114.2	0.8/-111.8	0.8/-109.7

Sample Collection

Analytical Parameter	X if Field Filtered	Volume Required/ Sample Container	Sample ID	Preservation Method
TCL VOC				
Na+ Sodium				
TDS, Cl, salinity				

Equipment Decon Identify equipment used (i.e., pumps, bailers, tubing, filters, etc.)

P = Purge S = Sample		Equipment Used	Decon Method
P	S	Grundfos pump	Isopropanol, Distilled Water
P	S	(Dedicated) teflon-lined	N/A
P	S	polyetheylene tubing	
P	S		
P	S		

NOTES:

Field Sampling Form

Project Name: NCBC Davisville IR Program Site 09 Project No.: 29600.32 Task: 3241 Date: 04/11/95
Well ID: MW-7S Personnel: J. Shapiro, J. Friesen Start Time: 1050 Finish Time: 1205

Air Monitoring
Equipment Used (Make/Model/Serial No.): HNu 101, 11.7CU, S/N, 901723
Calibration Information: 70 ppm w 100 ppm isobutylene, SPAN = 6.63
Ambient Air Reading: 0.8 ppm Well Headspace Reading: 1.6 ppm

Well Data/Integrity

Well Locked	X Yes __ No	Well Material:	X PVC / __ SS / Other_____
Protective Casing Secure	X Yes __ No	Well Diameter:	__ 2-in. / __ 4-in. / __ 6-in. / Other_____
Concrete Collar Intact	__ Yes __ No	Water Level Equip. Used:	__ Elect. Cond. Probe
Other: _____			__ Interface Probe
Protective Casing Stick-Up (ft): _____			__ Press. Transducer
Casing/Well Difference (ft): _____			__ _____
			__ _____

Water Level Data
Measured from: Top of Riser

Depth to Bottom of Well: 26.68 (ft)
Depth to Top of Water: 14.86 (ft)
Height of Water Column: 11.82 (ft)

X

Volume/ft Gal/ft (Well ID)

__0.04 (1 in.) __1.04 (5 in.)
X 0.17 (2 in.) __1.50 (6 in.)
__0.38 (3 in.) __2.60 (8 in.)
__0.66 (4 in.)

=

Gallons/Well Volume: 2

Purge Data Sample Collected Using: __ Bailer / X Pump / Other_____

Parameter	Initial	Volume 1	Volume 2	Volume 3	Volume __	Volume __	Volume __
Gallons	0	2.5	4.5	6.5	8.5		
Time (hrs)	1110	1115	1120	1125	1130		
Temperature (°C)	12.9	13.2	13.4	13.1	13.2		
pH	7.23	7.23	7.24	7.23	7.21		
Conductivity	375	780	750	730	730		
DO (ppm)	1.4	1.32	1.07	1.09	1.12		
Turbidity (NTUs)	49.5	3.95	2.4	2.43	1.72		
HNu/Odor	2.6/Slight	Sulfur/diesel					
Salinity/Eh	0.5/-139.5	0.5/---	0.5/-138.0	0.8/-134.8	0.5/-130.5		

Sample Collection

Analytical Parameter	X if Field Filtered	Volume Required/ Sample Container	Sample ID	Preservation Method
1515 collected sample and dup; pH not low enough in VOAs, recollected in vials with greater amount HCl				
TCL, VOC				
Na+Sodium				
TDS, Cl, salinity				

Equipment Decon Identify equipment used (i.e., pumps, bailers, tubing, filters, etc.)

P = Purge S = Sample		Equipment Used	Decon Method
P	S	Grundfos pump	Isopropanol, Distilled water
P	S	(Dedicated) teflon-lined polyethylene tubing	N/A
P	S		
P	S		

NOTES:

Field Sampling Form

Project Name: NCBC Davisville IR Program Site 09 Project No.: 29600.32 Task: 3241 Date: 07/11/94
Well ID: MW-7D Personnel: JDR, JS Start Time: 1158 Finish Time: 1315

Air Monitoring
Equipment Used (Make/Model/Serial No.): HNu
Calibration Information: SPAN = 0.52
Ambient Air Reading: 0 ppm Well Headspace Reading: 18 ppm

Well Data/Integrity

Well Locked	X Yes __ No	Well Material:	X PVC / __ SS / Other
Protective Casing Secure	X Yes __ No	Well Diameter:	X 2-in. / __ 4-in. / __ 6-in. / Other
Concrete Collar Intact	X Yes __ No	Water Level Equip. Used:	__ Elect. Cond. Probe
Other:			X Interface Probe
Protective Casing Stick-Up (ft):			__ Press. Transducer
Casing/Well Difference (ft):			

Water Level Data
Measured from: Top of PVC

Depth to Bottom of Well: 57.70 (ft)
Depth to Top of Water: 18.14 (ft)
Height of Water Column: 39.56 (ft)

X

Volume/ft
Gal/ft (Well ID)

__0.04 (1 in.) __1.04 (5 in.)
X 0.17 (2 in.) __1.50 (6 in.)
__0.38 (3 in.) __2.60 (8 in.)
__0.66 (4 in.)

=

Gallons/Well Volume: 6.72

Purge Data Sample Collected Using: __ Bailer / X Pump / Other

Parameter	Initial	Volume 1	Volume 2	Volume 3	Volume __	Volume __	Volume __
Gallons	0	7	14	21			
Time (hrs)	1215	1234	1249	1303			
Temperature (°C)	14.0	14.6	15.2	15.1			
pH	6.65	6.64	6.55	6.53			
Conductivity	1,740	1,900	2,240	2,250			
DO (ppm)	3.05	2.07	2.09	3.23			
Turbidity (NTUs)	106	103	64.7	154			
Odor	YES*	YES*	YES*	YES*			
Salinity/Eh	0.8/+3.83	0.8/+40.3	1.0/+45.7	1.1/+54.6			
HNu	4 in bucket			7 in bucket			

Sample Collection

Analytical Parameter	X if Field Filtered	Volume Required/ Sample Container	Sample ID	Preservation Method
1515 collected sample and dup; pH not low enough in VOAs, recollected in vials with greater amount HCl				
TCL, VOC		4 VOA		
Na+Sodium		500-mol poly		
TDS, Cl, salinity		1,500-mol poly		

Equipment Decon Identify equipment used (i.e., pumps, bailers, tubing, filters, etc.)

P = Purge S = Sample		Equipment Used	Decon Method
P	S	Grundfos pump	Isopropanol, Distilled water
P	S	(Dedicated) teflon-lined polyethylene tubing	N/A
P	S		
P	S		

NOTES: * Acetone

Field Sampling Form

Project Name: NCBC Davisville IR Program Site 09 Project No.: 29600.32 Task: 3241 Date: 04/11/95
Well ID: MW-7R Personnel: J. Shapiro, J. Friesen Start Time: 0905 Finish Time: 0951

Air Monitoring
Equipment Used (Make/Model/Serial No.): HNu 101, 11.7 eV, S/N 901723
Calibration Information: 70 ppm w/100 ppm isobutylene, SPAN = 6.63
Ambient Air Reading: 0.8 ppm Well Headspace Reading: 4.6 ppm

Well Data/Integrity

Well Locked	X Yes __ No	Well Material:	__ PVC / X SS / Other_____
Protective Casing Secure	X Yes __ No	Well Diameter:	X 2-in. / __ 4-in. / __ 6-in. / Other_____
Concrete Collar Intact	X Yes __ No	Water Level Equip. Used:	X Elect. Cond. Probe
Other: _____			__ Interface Probe
Protective Casing Stick-Up (ft): _____			__ Press. Transducer
Casing/Well Difference (ft): _____			__ _____
			__ _____

Water Level Data
Measured from: Top of Riser

Depth to Bottom of Well: 84.71 (ft)
Depth to Top of Water: 19.84 (ft)
Height of Water Column: 64.87 (ft)

X

Volume/ft
Gal/ft (Well ID)

__0.04 (1 in.) __1.04 (5 in.)
X 0.17 (2 in.) __1.50 (6 in.)
__0.38 (3 in.) __2.60 (8 in.)
__0.66 (4 in.)

=

Gallons/Well Volume: 11

Purge Data Sample Collected Using: __ Bailer / X Pump / Other_____

Parameter	Initial	Volume 1	Volume 2	Volume 3	Volume __	Volume __	Volume __
Gallons	0	5					
Time (hrs)	0940	1024					
Temperature (°C)	11.7	12.2					
pH	7.03	7.77					
Conductivity	510	348					
DO (ppm)	2.40	1.58					
Turbidity (NTUs)	14.5	18.7					
Odor	---	---					
Salinity/Eh	0.5/151.6	0.5/130.7					
NOTE: Continued on 17 April 1995.							

Sample Collection

Analytical Parameter	X if Field Filtered	Volume Required/ Sample Container	Sample ID	Preservation Method
1515 collected sample and dup; pH not low enough in VOAs, recollected in vials with greater amount HCl				
TCL, VOC				
Na+Sodium				
TDS, Cl, salinity				

Equipment Decon Identify equipment used (i.e., pumps, bailers, tubing, filters, etc.)

P = Purge S = Sample		Equipment Used	Decon Method
P	S	Grundfos pump	Isopropanol, Distilled water
P	S	(Dedicated) teflon-lined polyethylene tubing	N/A
P	S		
P	S		

NOTES:

Field Sampling Form

Project Name: NCBC Davisville IR Program Site 09 Project No.: 29600.32 Task: 3241 Date: 04/17/95
Well ID: MW7R Personnel: J. Shapiro, D. Street Start Time: 1200 Finish Time: 1500

Air Monitoring
Equipment Used (Make/Model/Serial No.): HNu 101, 11.7 eV, S/N 501723
Calibration Information: 70 ppm w/100 ppm isobutylene, (D Street calibration)
Ambient Air Reading: 0.8 ppm Well Headspace Reading: 4.6 ppm

Well Data/Integrity

Well Locked	X Yes __ No	Well Material:	X PVC / __ SS / Other_____
Protective Casing Secure	X Yes __ No	Well Diameter:	X 2-in. / __ 4-in. / __ 6-in. / Other_____
Concrete Collar Intact	X Yes __ No	Water Level Equip. Used:	__ Elect. Cond. Probe
Other: _____			__ Interface Probe
Protective Casing Stick-Up (ft): _____			__ Press. Transducer
Casing/Well Difference (ft): _____			__ _____
			__ _____

Water Level Data
Measured from:

Depth to Bottom of Well: 85 (ft)
Depth to Top of Water: 17.77 (ft)
Height of Water Column: 67.23 (ft)

X

Volume/ft
Gal/ft (Well ID)

__0.04 (1 in.) __1.04 (5 in.)
X 0.17 (2 in.) __1.50 (6 in.)
__0.38 (3 in.) __2.60 (8 in.)
__0.66 (4 in.)

=

Gallons/Well Volume: 11.4

Purge Data Sample Collected Using: __ Bailer / X Pump / Other_____

Parameter	Initial	Volume 1	Volume 2	Volume 3	Volume __	Volume __	Volume __
Gallons	0	4					
Time (hrs)	1421	1451					
Temperature (°C)	12.7	13.7					
pH	7.60	7.81					
Conductivity	722	722					
DO (ppm)	1.98	2.20					
Turbidity (NTUs)	4.94	11.2					
Odor	—	—					
Salinity/Eh	0.3/55.7	0.3/49.0					

Sample Collection

Analytical Parameter	X if Field Filtered	Volume Required/ Sample Container	Sample ID	Preservation Method
1500 collected samples		VOA - 2 vials (40 ml)		Hu
		NA+ - 500 ml poly		HNO_3
		TDS, Salinity Cl - 500 ml		HNO_3

Equipment Decon Identify equipment used (i.e., pumps, bailers, tubing, filters, etc.)

P = Purge S = Sample		Equipment Used	Decon Method
P	S		
P	S		
P	S		
P	S		
P	S		

NOTES: Collected initial sample for parameters and then pump stopped. DS thinks generator is low on oil. Having difficulty pumping well. Collected samples after approximately 6 gal.

Fi ld Sampling Form

Project Name: NCBC Davisville IR Program Site 09 Project No.: 29600.32 Task: 3241 Date: 04/17/95
Well ID: MW-8S Personnel: JPS Start Time: 1539 Finish Time: 1635

Air Monitoring
Equipment Used (Make/Model/Serial No.): _____
Calibration Information: _____
Ambient Air Reading: 0.4 ppm Well Headspace Reading: 0.4 ppm

Well Data/Integrity

Well Locked	X Yes __ No	Well Material:	X PVC / __ SS / Other_____
Protective Casing Secure	X Yes __ No	Well Diameter:	X 2-in. / __ 4-in. / __ 6-in. / Other_____
Concrete Collar Intact	X Yes __ No	Water Level Equip. Used:	__ Elect. Cond. Probe
Other: _____			X Interface Probe
Protective Casing Stick-Up (ft): _____			__ Press. Transducer
Casing/Well Difference (ft): _____			__ _____
			__ _____

Water Level Data
Measured from: Top of Riser

Depth to Bottom of Well: 22.50 (ft)
Depth to Top of Water: 13.09 (ft)
Height of Water Column: 9.41 (ft)

X

Volume/ft Gal/ft (Well ID)

__0.04 (1 in.) __1.04 (5 in.)
X 0.17 (2 in.) __1.50 (6 in.)
__0.38 (3 in.) __2.60 (8 in.)
__0.66 (4 in.)

=

Gallons/Well Volume: 0.75

Purge Data Sample Collected Using: __ Bailer / x Pump / Other_____

Parameter	Initial	Volume 1	Volume 2	Volume 3	Volume __	Volume __	Volume __
Gallons	0	2	4	6			
Time (hrs)	1557	1606	1612	1620			
Temperature (°C)	12.8	12.9	13.3	13.0			
pH	6.14	6.19	6.26	6.33			
Conductivity	2,060	2,010	1,930	1,890			
DO (ppm)	14.77	2.68	14.00	2.28			
Turbidity (NTUs)	>999	11.4	4.82	2.61			
Odor	---	---	---	---			
Salinity/Eh	0.9/-13.5	0.9/-39.1	0.9/-65.9	0.8/-75.1			

Sample Collection

Analytical Parameter	X if Field Filtered	Volume Required/ Sample Container	Sample ID	Preservation Method
TCL VOC				
Na+ Sodium				
TDS, Cl, salinity				

Equipment Decon Identify equipment used (i.e., pumps, bailers, tubing, filters, etc.)

P = Purge S = Sample		Equipment Used	Decon Method
P	S	Grundfos pump	Isopropanol, Distilled Water
P	S	(Dedicated) teflon-lined	N/A
P	S	polyetheylene tubing	
P	S		
P	S		

NOTES: Samples taken at 1635.

Fi ld Sampling Form

Project Name: NCBC Davisville IR Program Site 09 Project No.: 29600.32 Task: 3241 Date: 04/17/95
Well ID: MW-8D Personnel: JPS, JMF Start Time: 1419 Finish Time: 1510

Air Monitoring
Equipment Used (Make/Model/Serial No.): _____
Calibration Information: _____
Ambient Air Reading: 0.4 ppm Well Headspace Reading: 0.4 ppm

Well Data/Integrity

Well Locked	X Yes __ No	Well Material:	X PVC / __ SS / Other_____
Protective Casing Secure	X Yes __ No	Well Diameter:	X 2-in. / __ 4-in. / __ 6-in. / Other_____
Concrete Collar Intact	X Yes __ No	Water Level Equip. Used:	__ Elect. Cond. Probe
Other: _____			X Interface Probe
Protective Casing Stick-Up (ft): _____			__ Press. Transducer
Casing/Well Difference (ft): _____			__ _____
			__ _____

Water Level Data
Measured from: Top of PVC

Depth to Bottom of Well: 26.99 (ft)
Depth to Top of Water: 13.01 (ft)
Height of Water Column: 13.98 (ft)

X

Volume/ft
Gal/ft (Well ID)

__0.04 (1 in.) __1.04 (5 in.)
X 0.17 (2 in.) __1.50 (6 in.)
__0.38 (3 in.) __2.60 (8 in.)
__0.66 (4 in.)

=

Gallons/Well Volume: 1.11

Purge Data Sample Collected Using: __ Bailer / x Pump / Other_____

Parameter	Initial	Volume 1	Volume 2	Volume 3	Volume 4	Volume 5	Volume __
Gallons	0	2	4	6	8	10	
Time	1427	1433	1445	1452	1500	1508	
Temperature (°C)	13.1	13.3	13.6	13.6	13.5	14.0	
pH	8.29	7.31	6.76	6.53	6.49	6.44	
Conductivity	1,070	1,200	1,200	1,210	1,230	1,210	
DO (ppm)	1.17	12.75	1.75	1.33	13.42	1.06	
Turbidity (NTUs)	30.2	242	743	288	154	42.5	
Odor	>999	—	—	—	—	—	
Salinity/Eh	0.4/-21.6	0.5/-134.6	0.5/-89.0	0.5/-79.8	0.5/-79.8	0.5/-79.7	
Hnu							

Sample Collection

Analytical Parameter	X if Field Filtered	Volume Required/ Sample Container	Sample ID	Preservation Method
TCL VOC				
Na+ Sodium				
TDS, Cl, salinity				

Equipment Decon Identify equipment used (i.e., pumps, bailers, tubing, filters, etc.)

P = Purge S = Sample		Equipment Used	Decon Method
P	S	Grundfos pump	Isopropanol, Distilled Water
P	S	(Dedicated) teflon-lined	N/A
P	S	polyetheylene tubing	
P	S		
P	S		

NOTE: Samples taken at 1510.

Field Sampling Form

Project Name: NCBC Davisville IR Program Site 09 Project No.: 29600.32 Task: 3241 Date: 04/13/95
Well ID: MW-9D Personnel: JDR, JPS Start Time: 1405 Finish Time: 1550

Air Monitoring
Equipment Used (Make/Model/Serial No.): HNu PI101, 501027
Calibration Information: _____
Ambient Air Reading: 1.5 ppm Well Headspace Reading: 20 ppm

Well Data/Integrity

Well Locked	X Yes __ No	Well Material:	X PVC / __ SS / Other_____
Protective Casing Secure	X Yes __ No	Well Diameter:	X 2-in. / __ 4-in. / __ 6-in. / Other_____
Concrete Collar Intact	X Yes __ No	Water Level Equip. Used:	__ Elect. Cond. Probe
Other: _____			X Interface Probe
Protective Casing Stick-Up (ft): _____			__ Press. Transducer
Casing/Well Difference (ft): _____			__ _____
			__ _____

Water L vel Data
Measured from: Top of PVC

Depth to Bottom of Well: 64.00 (ft)
Depth to Top of Water: 18.15 (ft)
Height of Water Column: 45.85 (ft)

X

Volume/ft
Gal/ft (Well ID)

__0.04 (1 in.) __1.04 (5 in.)
X 0.17 (2 in.) __1.50 (6 in.)
__0.38 (3 in.) __2.60 (8 in.)
__0.66 (4 in.)

=

Gallons/Well Volume: 7.80

Purge Data Sample Collected Using: __ Bailer / X Pump / Other_____

Parameter	Initial	Volume 1	Volume 2	Volume 3	Volume __	Volume __	Volume __
Gallons	0	8	16	24			
Time		1445	1502	1517			
Temperature (°C)		15.1	14.8	15.4			
pH		6.60	6.54	6.63			
Conductivity		2,270	1,970	1,920			
DO (ppm)		1.40	1.99	1.24			
Turbidity (NTUs)		>999	>999	>999			
Odor		Slight	No				
Salinity/Eh		1.1/*	0.9/*	0.9/*			

* Eh meter never settled.

Sample Collection

Analytical Parameter	X if Field Filtered	Volume Required/ Sample Container	Sample ID	Preservation Method
TCL VOC				
Na+ Sodium				
TDS, Cl, salinity				

Equipment Decon Identify equipment used (i.e., pumps, bailers, tubing, filters, etc.)

P = Purge S = Sample		Equipment Used	Decon Method
P	S	Grundfos pump	Isopropanol, Distilled Water
P	S	(Dedicated) teflon-lined	N/A
P	S	polyetheylene tubing	
P	S		
P	S		

NOTES: _____

Fi ld Sampling Form

Project Name: NCBC Davisville IR Program Site 09 Project No.: 29600.32 Task: 3241 Date: 04/14/95
Well ID: MW-10S Personnel: JDR, JPS Start Time: 1520 Finish Time: 1550

Air Monitoring
Equipment Used (Make/Model/Serial No.): HNu PI101, 901723
Calibration Information: SPAN = 8.37
Ambient Air Reading: 1.5 ppm Well Headspace Reading: 1.5 ppm

Well Data/Integrity

Well Locked	X Yes __ No	Well Material:	X PVC / __ SS / Other_____
Protective Casing Secure	X Yes __ No	Well Diameter:	X 2-in. / __ 4-in. / __ 6-in. / Other_____
Concrete Collar Intact	X Yes __ No	Water Level Equip. Used:	__ Elect. Cond. Probe
Other: 15' Screen			X Interface Probe
Protective Casing Stick-Up (ft): _____			__ Press. Transducer
Casing/Well Difference (ft): _____			__ _____
			__ _____

Water Level Data
Measured from: Top of PVC

Depth to Bottom of Well: 30.75 (ft)
Depth to Top of Water: 19.45 (ft)
Height of Water Column: 11.30 (ft)

X

Volume/ft Gal/ft (Well ID)

__0.04 (1 in.) __1.04 (5 in.)
X 0.17 (2 in.) __1.50 (6 in.)
__0.38 (3 in.) __2.60 (8 in.)
__0.66 (4 in.)

=

Gallons/Well Volume: 1.92

Purge Data Sample Collected Using: __ Bailer / X Pump / Other_____

Parameter	Initial	Volume 1	Volume 2	Volume 3	Volume __	Volume __	Volume __
Gallons	0	2	4	6			
Time	1533	1537	1538	1545			
Temperature (°C)	12.4	12.4	13.4	13.1			
pH	6.47	6.75	6.67	6.40			
Conductivity	1,370	1,260	1,230	1,150			
DO (ppm)	1.24	1.17	2.43	1.27			
Turbidity (NTUs)	430	92.7	42.5	82.1			
Odor			Sulfur				
Salinity/Eh	0.6/*	0.6/-55.7	0.5/-54.9	0.5/-31.1			

Sample Collection

Analytical Parameter	X if Field Filtered	Volume Required/ Sample Container	Sample ID	Preservation Method
TCL VOC				
Na+ Sodium				
TDS, Cl, salinity				

Equipment Decon Identify equipment used (i.e., pumps, bailers, tubing, filters, etc.)

P = Purge S = Sample		Equipment Used	Decon Method
P	S	Grundfos pump	Isopropanol, Distilled Water
P	S	(Dedicated) teflon-lined	N/A
P	S	polyetheylene tubing	
P	S		
P	S		

NOTES: * Meter never settled.

Fi ld Sampling Form

Project Name: NCBC Davisville IR Program Site 09 Project No.: 29600.32 Task: 3241 Date: 04/14/95
Well ID: MW-10D Personnel: JDR, JPS Start Time: 1320 Finish Time: 1510

Air Monitoring
Equipment Used (Make/Model/Serial No.): HNu, PI101, GO1723
Calibration Information: SPAN=8.37
Ambient Air Reading: 1.5 ppm Well Headspace Reading: 7 ppm

Well Data/Integrity

Well Locked	X Yes __ No	Well Material:	X PVC / __ SS / Other_____
Protective Casing Secure	X Yes __ No	Well Diameter:	X 2-in. / __ 4-in. / __ 6-in. / Other_____
Concrete Collar Intact	X Yes __ No	Water Level Equip. Used:	__ Elect. Cond. Probe
Other: _____			X Interface Probe
Protective Casing Stick-Up (ft): _____			__ Press. Transducer
Casing/Well Difference (ft): _____			__ _____
			__ _____

Water Level Data
Measured from: Top of PVC

Depth to Bottom of Well: 81.50 (ft)
Depth to Top of Water: 18.30 (ft)
Height of Water Column: 63.20 (ft)

X

Volume/ft Gal/ft (Well ID)

__0.04 (1 in.) __1.04 (5 in.)
X 0.17 (2 in.) __1.50 (6 in.)
__0.38 (3 in.) __2.60 (8 in.)
__0.66 (4 in.)

=

Gallons/Well Volume: 10.7

Purge Data Sample Collected Using: __ Bailer / X Pump / Other_____

Parameter	Initial	Volume 1	Volume 2	Volume 3	Volume 4	Volume __	Volume __
Gallons	0	11	22	33	35		
Time	1332	1359	1415	1436	1505		
Temperature (°C)	13.1	14.0	14.3	13.8	13.1		
pH	8.35	7.29	7.29	7.06	7.10		
Conductivity	0.192	0.195	0.210	0.209	0.195		
DO (ppm)	2.51	1.50	1.04	3.64	2.31		
Turbidity (NTUs)	366	39.3	11.8	64.1	14.1		
Odor	Yes*	Yes*	Sulfur				
Salinity/Eh (Orion)	0.0/-175.5	0.0/-160.6	0.0/-140.5	0.0/-18.3	0.0		

Sample Collection

Analytical Parameter	X if Field Filtered	Volume Required/ Sample Container	Sample ID	Preservation Method
TCL VOC				
Na+ Sodium				
TDS, Cl, salinity				

Equipment Decon Identify equipment used (i.e., pumps, bailers, tubing, filters, etc.)

P = Purge S = Sample		Equipment Used	Decon Method
P	S	Grundfos pump	Isopropanol, Distilled Water
P	S	(Dedicated) teflon-lined	N/A
P	S	polyetheylene tubing	
P	S		
P	S		

NOTES: * Sulfur and/or acetone, pumped dry a couple of times.

Fi ld Sampling Form

Project Name: NCBC Davisville IR Program Site 09 Project No.: 29600.32 Task: 3241 Date: 04/10/95
Well ID: MW-11S Personnel: J. Simmons, J. Shapiro Start Time: 1420 Finish Time: 1650

Air Monitoring
Equipment Used (Make/Model/Serial No.): HNu 101, 11.7eV, S/N, 901723
Calibration Information: 70 ppm w/100 ppm isobutylene, SPAN = 6.63
Ambient Air Reading: 0.4 ppm Well Headspace Reading: 1.4 ppm

Well Data/Int grity

Well Locked	X Yes __ No	Well Material:	X PVC / __ SS / Other_____
Protective Casing Secure	X Yes __ No	Well Diameter:	X 2-in. / __ 4-in. / __ 6-in. / Other_____
Concrete Collar Intact	__ Yes __ No	Water Level Equip. Used:	X Elect. Cond. Probe
Other: 15-ft Screen			__ Interface Probe
Protective Casing Stick-Up (ft): _____			__ Press. Transducer
Casing/Well Difference (ft): _____			__ _____
			__ _____

Water L vel Data
Measured from: Top of Riser

Depth to Bottom of Well: 23.33 (ft)
Depth to Top of Water: 8.976 (ft)
Height of Water Column: 14.36 (ft)

X

Volume/ft Gal/ft (Well ID)

__0.04 (1 in.) __1.04 (5 in.)
X 0.17 (2 in.) __1.50 (6 in.)
__0.38 (3 in.) __2.60 (8 in.)
__0.66 (4 in.)

=

Gallons/Well Volume: 2.4

Purge Data Sample Collected Using: __ Bailer / x Pump / Other_____

Parameter	Initial	Volume 1	Volume 2	Volume 3	Volume 4	Volume 5	Volume 6
Gallons	0	2.5	5.0	7.5	10.0	12.5	17.5
Time	1440	1452	1500	1510	1515	1525	1600
Temperature (°C)	11	12	11.6	12.3	12.2	12.7	10.3
pH	6.28	6.57	6.74	6.72	6.4	6.77	6.71
Conductivity	90	212	310	225	120	280	410
DO (ppm)	3.4	1.17	1.50	1.36	1.42	5.37	5.42
Turbidity (NTUs)	225	11	112	29	28.3	>999	396
Odor	---	---	---	---	---	---	---
Salinity/Eh	0.2/110.7	0.2/0.9	0.2/-42.9	0.0/-20.1	0.0/12.7	0.2/-10.2	0.5/-2.0

Sample Collection

Analytical Parameter	X if Field Filtered	Volume Required/ Sample Container	Sample ID	Preservation Method
TCL VOC				
Na+ Sodium				
TDS, Cl, salinity				

Equipment Decon Identify equipment used (i.e., pumps, bailers, tubing, filters, etc.)

P = Purge S = Sample		Equipment Used	Decon Method
P	S	Grundfos pump	Isopropanol, Distilled Water
P	S	(Dedicated) teflon-lined	N/A
P	S	polyetheylene tubing	
P	S		
P	S		

NOTES: Volume 5: very dark gray silty

Field Sampling Form

Project Name: NCBC Davisville IR Program Site 09 Project No.: 29600.32 Task: 3241 Date: 04/10/95
Well ID: MW-11S Personnel: J. Simmons, J. Shapiro Start Time: 1420 Finish Time: 1650

Air Monit ring
Equipment Used (Make/Model/Serial No.): HNu 101, 11.7eV, S/N, 901723
Calibration Information: 70 ppm w/100 ppm isobutylene, SPAN = 6.63
Ambient Air Reading: ____ ppm Well Headspace Reading: _____ ppm

Well Data/Integrity

Well Locked __ Yes __ No
Protective Casing Secure __ Yes __ No
Concrete Collar Intact __ Yes __ No
Other: _____
Protective Casing Stick-Up (ft): _____
Casing/Well Difference (ft): _____

Well Material: __ PVC / __ SS / Other_____
Well Diameter: __ 2-in. / __ 4-in. / __ 6-in. / Other_____
Water Level Equip. Used: __ Elect. Cond. Probe
__ Interface Probe
__ Press. Transducer
__ _____
__ _____

Water Level Data
Measured from: Top of Riser

Depth to Bottom of Well: _____ (ft)
Depth to Top of Water: _____ (ft)
Height of Water Column: _____ (ft)

X

Volume/ft
Gal/ft (Well ID)

_0.04 (1 in.) _1.04 (5 in.)
_0.17 (2 in.) _1.50 (6 in.)
_0.38 (3 in.) _2.60 (8 in.)
_0.66 (4 in.)

=

Gallons/Well Volume: 2.4

Purge Data Sample Collected Using: __ Bailer / _x_ Pump / Other_____

Parameter	Initial	Volume 7	Volume 8	Volume 9	Volume __	Volume __	Volume __
Gallons		20	22.5	25			
Time		1605	1615	1643			
Temperature (°C)		11.9	11.4	10.6			
pH		6.71	6.67	6.69			
Conductivity		290	250	440			
DO (ppm)		5.01	6.51	6.01			
Turbidity (NTUs)		108	371	523			
Odor		---	---	---			
Salinity/Eh		0.2/11.1	0.2/39.0	0.3/-10.1			

Sample Collection

Analytical Parameter	X if Field Filtered	Volume Required/ Sample Container	Sample ID	Preservation Method
1643 Samples collected VOA		2 VOA vials		HCl
TCL VOC				
NA+ Sodium		1 poly		HNO_3
TDS, Cl, salinity		1 poly		

Equipment Decon Identify equipment used (i.e., pumps, bailers, tubing, filters, etc.)

P = Purge S = Sample		Equipment Used	Decon Method
P	S	Grundfos pump	Isopropanol, Distilled Water
P	S	(Dedicated) teflon-lined	N/A
P	S	polyetheylene tubing	
P	S		
P	S		

NOTES:

Fi ld Sampling Form

Project Name: NCBC Davisville IR Program Site 09 Project No.: 29600.32 Task: 3241 Date: 04/10/95
Well ID: MW-12D Personnel: JDR, JF Start Time: 1345 Finish Time: 1530

Air Monitoring
Equipment Used (Make/Model/Serial No.): _____
Calibration Information: _____
Ambient Air Reading: 0.5 ppm Well Headspace Reading: 9 ppm

Well Data/Integrity
Well Locked __ Yes X No (no lock)
Protective Casing Secure X Yes __ No
Concrete Collar Intact X Yes __ No
Other: _____
Protective Casing Stick-Up (ft): Flush Mount
Casing/Well Difference (ft): _____

Well Material: X PVC / __ SS / Other_____
Well Diameter: X 2-in. / __ 4-in. / __ 6-in. / Other_____
Water Level Equip. Used: __ Elect. Cond. Probe
__ Interface Probe
__ Press. Transducer
__ _____
__ _____

Water L vel Data
Measured from: Top of PVC

Depth to Bottom of Well: 68.35 (ft)
Depth to Top of Water: 9.32 (ft)
Height of Water Column: 59.03 (ft)

X

Volume/ft
Gal/ft (Well ID)

__0.04 (1 in.) __1.04 (5 in.)
X 0.17 (2 in.) __1.50 (6 in.)
__0.38 (3 in.) __2.60 (8 in.)
__0.66 (4 in.)

=

Gallons/Well Volume: 10.04

Purge Data Sample Collected Using: __ Bailer / x Pump / Other_____

Parameter	Initial	Volume 1	Volume 2	Volume 3	Volume __	Volume __	Volume __
Gallons	0	10	20	30			
Time	1431	1452	1507	1523			
Temperature (°C)	13.2	14.9	14.5	14.6			
pH	6.24	6.49	6.58	6.50			
Conductivity	105	165	175	177			
DO (ppm)	6.83	2.93	2.43	2.06			
Turbidity (NTUs)	400	65.5	23.7	13			
Odor							
Salinity/Eh	0.00/+96.5	0.00/+21.2	0.00/+22.1	0.00/+26.0			
In Well HNu	15 ppm (0.5,6.2)	7 ppm (0.5,6.2)		0.5 BZ			

Sample Collection

Analytical Parameter	X if Field Filtered	Volume Required/ Sample Container	Sample ID	Preservation Method
TCL VOC				
Na+ Sodium				
TDS, Cl, salinity				

Equipment Decon Identify equipment used (i.e., pumps, bailers, tubing, filters, etc.)

P = Purge S = Sample		Equipment Used	Decon Method
P	S	Grundfos pump	Isopropanol, Distilled Water
P	S	(Dedicated) teflon-lined	N/A
P	S	polyetheylene tubing	
P	S		
P	S		

NOTES: BZ = Breathing Zone

Fi ld Sampling Form

Project Name: NCBC Davisville IR Program Site 09 Project No.: 29600.32 Task: 3241 Date: 04/07/95
Well ID: MW-13S Personnel: J. Chon, J. Simmons, J. Shapiro Start Time: 1400 Finish Time: 1440

Air Monitoring
Equipment Used (Make/Model/Serial No.): _____
Calibration Information: _____
Ambient Air Reading: ____ ppm Well Headspace Reading: ____ ppm

Well Data/Integrity

Well Locked	X Yes __ No	Well Material:	X PVC / __ SS / Other_____
Protective Casing Secure	X Yes __ No	Well Diameter:	X 2-in. / __ 4-in. / __ 6-in. / Other_____
Concrete Collar Intact	X Yes __ No	Water Level Equip. Used:	X Elect. Cond. Probe
Other: _____			__ Interface Probe
Protective Casing Stick-Up (ft): _____			__ Press. Transducer
Casing/Well Difference (ft): _____			__ _____
			__ _____

Water L vel Data
Measured from: Top of Riser

Depth to Bottom of Well: 1553 (ft)
Depth to Top of Water: 4.06 (ft)
Height of Water Column: 11.47 (ft)

X

Volume/ft Gal/ft (Well ID)

__0.04 (1 in.) __1.04 (5 in.)
x0.17 (2 in.) __1.50 (6 in.)
__0.38 (3 in.) __2.60 (8 in.)
__0.66 (4 in.)

=

Gallons/Well Volume: 1.9

Purge Data Sample Collected Using: __ Bailer / x Pump / Other_____

Parameter	Initial	Volume 1	Volume 2	Volume 3	Volume 4	Volume 5	Volume 6
Gallons	0	4	6	8	10	12	14
Time	1406	1409	1414	1418	1423	1430	1434
Temperature (°C)	8.6	8.6	8.8	8.4	8.4	8.5	8.2
pH	6.27	6.16	6.18	6.12	6.12	6.14	6.12
Conductivity	82	80	75	73	72	72	72
DO (ppm)	1.22	1.39	4.48	2.48	2.77	3.41	3.03
Turbidity (NTUs)	825	159	308	30.6	21.8	14.2	12.4
Odor	---	---	---	---	---	---	---
Salinity/Eh	0.02/32.5	0.02/83.8	0.02/99.2	0.02/114.8	0.02/124.5	0.02/127.6	0.02/130.6

Hnu = 0 ppm

Sample Collection

Analytical Parameter	X if Field Filtered	Volume Required/ Sample Container	Sample ID	Preservation Method
TCL VOC				
Na+ Sodium				
TDS, Cl, salinity				

Equipment Decon Identify equipment used (i.e., pumps, bailers, tubing, filters, etc.)

P = Purge S = Sample		Equipment Used	Decon Method
P	S	Grundfos pump	Isopropanol, Distilled Water
P	S	(Dedicated) teflon-lined	N/A
P	S	polyetheylene tubing	
P	S		
P	S		

NOTES:

Field Sampling Form

Project Name: NCBC Davisville IR Program Site 09 Project No.: 29600.32 Task: 3241 Date: 04/07/95
Well ID: MW-13D Personnel: J. Chon, J. Simmons, J. Shapiro Start Time: 1500 Finish Time: 1630

Air Monitoring
Equipment Used (Make/Model/Serial No.): _____
Calibration Information: _____
Ambient Air Reading: 1 ppm Well Headspace Reading: 24 ppm

Well Data/Integrity

Well Locked	x Yes __ No	Well Material:	x PVC / __ SS / Other_____
Protective Casing Secure	x Yes __ No	Well Diameter:	x 2-in. / __ 4-in. / __ 6-in. / Other_____
Concrete Collar Intact	__ Yes __ No	Water Level Equip. Used:	__ Elect. Cond. Probe
Other: _____			__ Interface Probe
Protective Casing Stick-Up (ft): _____			__ Press. Transducer
Casing/Well Difference (ft): _____			__ _____
			__ _____

Water Lev l Data
Measured from: Top of Riser

Depth to Bottom of Well: 53.3 (ft)
Depth to Top of Water: 4.41 (ft)
Height of Water Column: 48.89 (ft)

X

Volume/ft
Gal/ft (Well ID)

__0.04 (1 in.) __1.04 (5 in.)
X 0.17 (2 in.) __1.50 (6 in.)
__0.38 (3 in.) __2.60 (8 in.)
__0.66 (4 in.)

=

Gallons/Well Volume: 8.3

Purge Data Sample Collected Using: __ Bailer / x Pump / Other_____

Parameter	Initial	Volume 1	Volume 2	Volume 3	Volume 4	Volume __	Volume __
Gallons	0	8	16	24	32		
Time	1508	1523	1540	1558	1615		
Temperature (°C)	10.9	11.5	11.5	11.4	11.4		
pH	9.89	7.44	7.47	7.34	7.38		
Conductivity	97	80	85	82	82		
DO (ppm)	2.83	1.20	1.11	0.97	1.18		
Turbidity (NTUs)	>999	157	70.7	111	99.8		
Odor							
Salinity/Eh	0.02/60.7	0.02/-69.7	0.02/-99.6	0.02/-112.9	0.02/-114.6		

Sample Collection

Analytical Parameter	X if Field Filtered	Volume Required/ Sample Container	Sample ID	Preservation Method
TCL VOC				
Na+ Sodium				
TDS, Cl, salinity				

Equipment Decon Identify equipment used (i.e., pumps, bailers, tubing, filters, etc.)

P = Purge S = Sample		Equipment Used	Decon Method
P	S	Grundfos pump	Isopropanol, Distilled Water
P	S	(Dedicated) teflon-lined	N/A
P	S	polyetheylene tubing	
P	S		
P	S		

NOTES:

Field Sampling Form

Project Name: NCBC Davisville IR Program Site 09 Project No.: 29600.32 Task: 3241 Date: 04/07/95
Well ID: MW-14I Personnel: JDR, JS Start Time: 1042 Finish Time: 1140

Air Monitoring
Equipment Used (Make/Model/Serial No.): HNu
Calibration Information: SPAN = 0.52
Ambient Air Reading: 0.5 ppm Well Headspace Reading: 0.5 ppm

Well Data/Integrity

Well Locked	X Yes __ No	Well Material:	X PVC / __ SS / Other_____
Protective Casing Secure	X Yes __ No	Well Diameter:	X 2-in. / __ 4-in. / __ 6-in. / Other_____
Concrete Collar Intact	X Yes __ No	Water Level Equip. Used:	__ Elect. Cond. Probe
Other: _____			X Interface Probe
Protective Casing Stick-Up (ft): _____			__ Press. Transducer
Casing/Well Difference (ft): _____			__ _____
			__ _____

Wat r Level Data
Measured from: Top of PVC

Depth to Bottom of Well: 37.60 (ft)
Depth to Top of Water: 14.47 (ft)
Height of Water Column: 23.13 (ft)

X

Volume/ft
Gal/ft (Well ID)

__0.04 (1 in.) __1.04 (5 in.)
X 0.17 (2 in.) __1.50 (6 in.)
__0.38 (3 in.) __2.60 (8 in.)
__0.66 (4 in.)

=

Gallons/Well Volume: 3.93

Purge Data Sample Collected Using: __ Bailer / x Pump / Other_____

Parameter	Initial	Volume 1	Volume 2	Volume 3	Volume __	Volume __	Volume __
Gallons	0	4	8	12			
Time	1102	1109	1115	1126			
Temperature (°C)	12.9	13.5	14.0	14.0			
pH	7.23	7.26	7.22	7.25			
Conductivity	970	903	935	953			
DO (ppm)		3.04	1.10	1.47			
Turbidity (NTUs)	219	534	>999	>999			
Odor	Yes(?)	Yes*					
Salinity/Eh	0.4/-11.0	0.3/-79.3	0.4/-79.3	0.4/-82.4			

Hnu = 0 ppm

Sample Collection

Analytical Parameter	X if Field Filtered	Volume Required/ Sample Container	Sample ID	Preservation Method
TCL VOC				
Na+ Sodium				
TDS, Cl, salinity				

Equipment Decon Identify equipment used (i.e., pumps, bailers, tubing, filters, etc.)

P = Purge S = Sample		Equipment Used	Decon Method
P	S	Grundfos pump	Isopropanol, Distilled Water
P	S	(Dedicated) teflon-lined	N/A
P	S	polyetheylene tubing	
P	S		
P	S		

NOTES: * Acetone?

Field Sampling Form

Project Name: NCBC Davisville IR Program Site 09 Project No.: 29600.32 Task: 3241 Date: 04/11/95
Well ID: MW-14D Personnel: JDR, JS Start Time: 0915 Finish Time: 1030

Air M nitoring
Equipment Used (Make/Model/Serial No.): HNu
Calibration Information: SPAN = 0.52
Ambient Air Reading: 0.8 ppm Well Headspace Reading: 0.8 ppm

Well Data/Integrity

Well Locked	X Yes __ No	Well Material:	__ PVC / X SS / Other_____
Protective Casing Secure	X Yes __ No	Well Diameter:	X 2-in. / __ 4-in. / __ 6-in. / Other_____
Concrete Collar Intact	X Yes __ No	Water Level Equip. Used:	__ Elect. Cond. Probe
Other: _____			X Interface Probe
Protective Casing Stick-Up (ft): _____			__ Press. Transducer
Casing/Well Difference (ft): _____			__ _____
			__ _____

Water L vel Data
Measured from: Top of SS

Depth to Bottom of Well: 63.35 (ft)
Depth to Top of Water: 17.93 (ft)
Height of Water Column: 45.42 (ft)

X

Volume/ft
Gal/ft (Well ID)

__0.04 (1 in.) __1.04 (5 in.)
X 0.17 (2 in.) __1.50 (6 in.)
__0.38 (3 in.) __2.60 (8 in.)
__0.66 (4 in.)

=

Gallons/Well Volume: 7.72

Purge Data Sample Collected Using: __ Bailer / X Pump / Other_____

Parameter	Initial	Volume 1	Volume 2	Volume 3	Volume __	Volume __	Volume __
Gallons	0	7.7	15.4	23.1			
Time	0942	0954	1007	1020			
Temperature (°C)	11.2	12.6	12.5	12.5			
pH	7.01	6.62	6.81	6.73			
Conductivity	1,010	1,370	1,390	1,380			
DO (ppm)	2.33	3.11	10.88	11.27			
Turbidity (NTUs)	68.7	13.2	4.34	2.76			
Odor							
Salinity/Eh	0.4	0.6/-54.1	0.6/-48.1	0.6/-53.2			
HNu		0.8 in well	10 in well (0.8,BZ)	0.8 in well			

Sample Collection

Analytical Parameter	X if Field Filtered	Volume Required/ Sample Container	Sample ID	Preservation Method
TCL VOC				
Na+ Sodium				
TDS, Cl, salinity				

Equipment Decon Identify equipment used (i.e., pumps, bailers, tubing, filters, etc.)

P = Purge S = Sample		Equipment Used	Decon Method
P	S	Grundfos pump	Isopropanol, Distilled Water
P	S	(Dedicated) teflon-lined	N/A
P	S	polyetheylene tubing	
P	S		
P	S		

NOTES: BZ = Breathing Zone

Field Sampling Form

Project Name: NCBC Davisville IR Program Site 09 Project No.: 29600.32 Task: 3241 Date: 04/14/95
Well ID: MW-15I Personnel: JDR, JPS Start Time: 0842 Finish Time: 0930

Air Monitoring
Equipment Used (Make/Model/Serial No.): HNu, PI 101, 901723
Calibration Information: SPAN = 8.37
Ambient Air Reading: 2.5 ppm Well Headspace Reading: 6 ppm

Well Data/Integrity

Well Locked X Yes __ No
Protective Casing Secure X Yes __ No
Concrete Collar Intact X Yes __ No
Other: _____
Protective Casing Stick-Up (ft): _____
Casing/Well Difference (ft): _____

Well Material: __ PVC / X SS / Other_____
Well Diameter: X 2-in. / __ 4-in. / __ 6-in. / Other_____
Water Level Equip. Used: __ Elect. Cond. Probe
X Interface Probe
__ Press. Transducer
__ _____
__ _____

Wat r Level Data
Measured from: Top of Riser

Depth to Bottom of Well: 33.06 (ft)
Depth to Top of Water: 14.91 (ft)
Height of Water Column: 18.05 (ft)

X

Volume/ft Gal/ft (Well ID)

__0.04 (1 in.) __1.04 (5 in.)
X 0.17 (2 in.) __1.50 (6 in.)
__0.38 (3 in.) __2.60 (8 in.)
__0.66 (4 in.)

=

Gallons/Well Volume: 3.09

Purge Data Sample Collected Using: __ Bailer / X Pump / Other_____

Parameter	Initial	Volume 1	Volume 2	Volume 3	Volume __	Volume __	Volume __
Gallons	0	3	6	9			
Time	0900	0906	0913	0917			
Temperature (°C)	11.4	12.3	12.5	12.5			
pH	6.81	6.92	6.91	6.90			
Conductivity	1,300	1,290	1,270	1,300			
DO (ppm)	1.63	1.49	1.10	0.79			
Turbidity (NTUs)	59.6	15.7	5.84	5.89			
Odor	Slight						
Salinity/Eh (Orion)	0.5/*	0.5/-91.1	0.5/-93.3	0.5/-86.5			

Sample Collection

Analytical Parameter	X if Field Filtered	Volume Required/ Sample Container	Sample ID	Preservation Method
TCL VOC				
Na+ Sodium				
TDS, Cl, salinity				

Equipment Decon Identify equipment used (i.e., pumps, bailers, tubing, filters, etc.)

P = Purge S = Sample		Equipment Used	Decon Method
P	S	Grundfos pump	Isopropyl/distilled water
P	S	Grundfos pump	Isopropyl/distilled water
P	S	(Dedicated) teflon-lined polyethene tubing	N/A
P	S		
P	S		

NOTES: *Meter never settled.

Field Sampling Form

Project Name: NCBC Davisville IR Program Site 09 Project No.: 29600.32 Task: 3241 Date: 04/12/95
Well ID: MW-16S Personnel: J. Shapiro Start Time: 1400 Finish Time: 1450

Air M nit ring

Equipment Used (Make/Model/Serial No.): HNu, 101, 11.7 eV, S/N 901723
Calibration Information: 70 ppm w 100 ppm isobutylene, SPAN = 7.13
Ambient Air Reading: 1.5 ppm Well Headspace Reading: 1.2 ppm

Well Data/Integrity

Well Locked X Yes __ No
Protective Casing Secure X Yes __ No
Concrete Collar Intact X Yes __ No
Other: _____
Protective Casing Stick-Up (ft): _____
Casing/Well Difference (ft): _____

Well Material: __ PVC / X SS / Other_____
Well Diameter: X 2-in. / __ 4-in. / __ 6-in. / Other_____
Water Level Equip. Used: X Elect. Cond. Probe
__ Interface Probe
__ Press. Transducer
__ _____
__ _____

Water L v l Data
Measured from: Top of Riser

Depth to Bottom of Well: 25.01 (ft)
Depth to Top of Water: 16.06 (ft)
Height of Water Column: 8.95 (ft)

X

Volume/ft
Gal/ft (Well ID)

__0.04 (1 in.) __1.04 (5 in.)
X 0.17 (2 in.) __1.50 (6 in.)
__0.38 (3 in.) __2.60 (8 in.)
__0.66 (4 in.)

=

Gallons/Well Volume: 1.5

Purge Data Sample Collected Using: __ Bailer / X Pump / Other_____

Parameter	Initial	Volume 1	Volume 2	Volume 3	Volume 4	Volume 5	Volume __
Gallons	0	2	4	6	8	10	
Time	1422	1427	1431	1435	1438	1443	
Temperature (°C)	12.0	11.1	11.5	11.6	11.6	11.2	
pH	6.35	6.37	6.38	6.37	6.48	6.47	
Conductivity	782	797	803	806	813	803	
DO (ppm)	13.19	13.36	12.89	12.63	12.59	12.37	
Turbidity (NTUs)	>999	191	114	53.8	28.0	17.9	
Odor	---	Solv	Solv	Solv	Solv		
Salinity/Eh	0.3/-106.3	0.3/-109.7	0.3/-117.5	0.3/-121.2	0.3/-123.3	0.3/-126.3	

Sample Collection

Analytical Parameter	X if Field Filtered	Volume Required/ Sample Container	Sample ID	Preservation Method
TCL VOC				
Na+ Sodium				
TDS, Cl, salinity				

Equipment Decon Identify equipment used (i.e., pumps, bailers, tubing, filters, etc.)

P = Purge S = Sample		Equipment Used	Decon Method
P	S	Horiba	
P	S	Orion - eH	
P	S	Hach 2100P	
P	S	Grundfos pump	Isopropanol, Distilled Water
P	S	Dedicated teflon-lined polyethylene tubing	N/A

NOTES:

Field Sampling Form

Project Name: NCBC Davisville IR Program Site 09 Project No.: 29600.32 Task: 3241 Date: 04/12/95
Well ID: MW-17I Personnel: JDR, JPS Start Time: 0900 Finish Time: 0945

Air Monitoring
Equipment Used (Make/Model/Serial No.): HNu, PI101, 501027
Calibration Information: SPAN = 0.28
Ambient Air Reading: 11 ppm Well Headspace Reading: 13 ppm

Well Data/Integrity

Well Locked X Yes __ No
Protective Casing Secure X Yes __ No
Concrete Collar Intact X Yes __ No
Other: _____
Protective Casing Stick-Up (ft): _____
Casing/Well Difference (ft): _____

Well Material: __ PVC / X SS / Other_____
Well Diameter: X 2-in. / __ 4-in. / __ 6-in. / Other_____
Water Level Equip. Used: __ Elect. Cond. Probe
X Interface Probe
__ Press. Transducer
__ _____
__ _____

Water Level Data
Measured from: Top of Riser

Depth to Bottom of Well: 26.70 (ft)
Depth to Top of Water: 15.96 (ft)
Height of Water Column: 10.74 (ft)

X

Volume/ft Gal/ft (Well ID)

__0.04 (1 in.) __1.04 (5 in.)
X 0.17 (2 in.) __1.50 (6 in.)
__0.38 (3 in.) __2.60 (8 in.)
__0.66 (4 in.)

=

Gallons/Well Volume: 1.8

Purge Data Sample Collected Using: __ Bailer / x Pump / Other_____

Parameter	Initial	Volume 1	Volume 2	Volume 3	Volume __	Volume __	Volume __
Gallons	0	2	4	6	8		
Time	0915	0920	0925	0926	0932		
Temperature (°C)	10.3	10.6	10.9	10.6	10.5		
pH	6.86	7.03	7.12	7.11	7.09		
Conductivity	1,120	1,100	1,120	1,090	1,100		
DO (ppm)	1.18	1.88	1.00	2.21	2.16		
Turbidity (NTUs)	>999	50.8	6.25	3.33	2.98		
Odor	Yes*						
Salinity/Eh	0.4/NR	0.4**	0.4**	0.4/**(~110)	0.4/-105.7		

Sample Collection

Analytical Parameter	X if Field Filtered	Volume Required/ Sample Container	Sample ID	Preservation Method
TCL VOC				
Na+ Sodium				
TDS, Cl, salinity				

Equipment Decon Identify equipment used (i.e., pumps, bailers, tubing, filters, etc.)

P = Purge S = Sample		Equipment Used	Decon Method
P	S	Grundfos pump	Isopropanol, Distilled Water
P	S	(Dedicated) teflon-lined	N/A
P	S	polyetheylene tubing	
P	S		
P	S		

NOTES: * Acetone?
** Meter never settled.

Field Sampling Form

Project Name: NCBC Davisville IR Program Site 09 Project No.: 29600.32 Task: 3241 Date: 04/11/95
Well ID: MW-17D Personnel: JDR, JPS Start Time: 1500 Finish Time: 1700

Air Monitoring
Equipment Used (Make/Model/Serial No.): HNu
Calibration Information: SPAN = 0.52
Ambient Air Reading: 0.5 ppm Well Headspace Reading: 1.0 ppm

Well Data/Integrity

Well Locked	__ Yes X No	Well Material:	X PVC / __ SS / Other
Protective Casing Secure	X Yes __ No	Well Diameter:	X 2-in. / __ 4-in. / __ 6-in. / Other
Concrete Collar Intact	X Yes __ No	Water Level Equip. Used:	__ Elect. Cond. Probe
Other:			X Interface Probe
Protective Casing Stick-Up (ft):			__ Press. Transducer
Casing/Well Difference (ft):			

Water Level Data
Measured from: Top of PVC

Depth to Bottom of Well: 70.60 (ft)
Depth to Top of Water: 17.50 (ft)
Height of Water Column: 53.10 (ft)

X

Volume/ft Gal/ft (Well ID)

__0.04 (1 in.) __1.04 (5 in.)
X 0.17 (2 in.) __1.50 (6 in.)
__0.38 (3 in.) __2.60 (8 in.)
__0.66 (4 in.)

=

Gallons/Well Volume: 9.03

Purge Data Sample Collected Using: __ Bailer / x Pump / Other

Parameter	Initial	Volume 1	Volume 2	Volume 3	Volume __	Volume __	Volume __
Gallons	0	9	18	24	36	45	
Time	1530	1545	1600	1613	1633	1645	
Temperature (°C)	13.4	14.2	13.9	13.6	13.4	13.5	
pH	7.11	7.03	7.22	7.06	7.08	7.10	
Conductivity	786	798	747	614	962	612	
DO (ppm)	1.46	2.49	3.06	3.20	4.40	4.45	
Turbidity (NTUs)*	11.9*	13.1*	46.3*	48.6*	29.5*	6.22*	
Odor							
Salinity/Eh	0.3/+72.7	0.3/**	0.3/+8.1	0.2/-33.8	0.4/NR	0.2/NR	
HNu			0.5 in well				

Hnu = 0 ppm

Sample Collection

Analytical Parameter	X if Field Filtered	Volume Required/ Sample Container	Sample ID	Preservation Method
TCL VOC				
Na+ Sodium				
TDS, Cl, salinity				

Equipment Decon Identify equipment used (i.e., pumps, bailers, tubing, filters, etc.)

P = Purge S = Sample		Equipment Used	Decon Method
P	S	Grundfos pump	Isopropanol, Distilled Water
P	S	(Dedicated) teflon-lined	N/A
P	S	polyetheylene tubing	
P	S		

NOTES: NR = No reading. Well ran dry at 1624; let it recharge. Well ran dry at 1651; let it recharge.
* Turbidity meter does not appear operative.
** Meter never settled.

Fi ld Sampling Form

Project Name: NCBC Davisville IR Program Site 09 Project No.: 29600.32 Task: 3241 Date: 04/13/95
Well ID: MW-18I Personnel: J. Friesen, J. Shapiro Start Time: 1340 Finish Time: 1700

Air Monitoring
Equipment Used (Make/Model/Serial No.): Hnu, 101, 11.7 eV, S/N 901723
Calibration Information: 70 ppm w 100 ppm isobutylene, SPAN = 6.18
Ambient Air Reading: 0.8 ppm Well Headspace Reading: 20 ppm

Well Data/Integrity

Well Locked	X Yes __ No	Well Material:	__ PVC / X SS / Other_____
Protective Casing Secure	X Yes __ No	Well Diameter:	X 2-in. / __ 4-in. / __ 6-in. / Other_____
Concrete Collar Intact	X Yes __ No	Water Level Equip. Used:	X Elect. Cond. Probe
Other: _____			__ Interface Probe
Protective Casing Stick-Up (ft): _____			__ Press. Transducer
Casing/Well Difference (ft): _____			__ _____
			__ _____

Water L vel Data
Measured from:

Depth to Bottom of Well: 28.93 (ft)
Depth to Top of Water: 13.25 (ft)
Height of Water Column: 15.68 (ft)

X

Volume/ft
Gal/ft (Well ID)

__0.04 (1 in.) __1.04 (5 in.)
X 0.17 (2 in.) __1.50 (6 in.)
__0.38 (3 in.) __2.60 (8 in.)
__0.66 (4 in.)

=

Gallons/Well Volume: 2.7

Purge Data Sample Collected Using: __ Bailer / x Pump / Other_____

Parameter	Initial	Volume 1	Volume 2	Volume 3	Volume 4	Volume 5	Volume __
Gallons	0	3	6	9	12		
Time	1630	1640	1643	1646	1650		
Temperature (°C)	15.6	14.0	13.4	13.6	13.1		
pH	6.73	6.58	6.66	6.63	6.65		
Conductivity	797	842	910	850	852		
DO (ppm)	11.85	11.42	11.49	11.46	11.82		
Turbidity (NTUs)	321	16.9	5.73	6.53	7.94		
Odor	Solv/Sulfur	Solv/Sulfur	*	*	*		
Salinity/Eh	0.3/-163.4	0.3/-153.4	0.4/-154.9	0.3/-149.6	0.3/-145.6		

Sample Collection

Analytical Parameter	X if Field Filtered	Volume Required/ Sample Container	Sample ID	Preservation Method
TCL VOC				
Na+ Sodium				
TDS, Cl, salinity				

Equipment Decon Identify equipment used (i.e., pumps, bailers, tubing, filters, etc.)

P = Purge S = Sample		Equipment Used	Decon Method
P	S	Horiba - pH, cond., salinity, T, DO	
P	S	Orion - Eh	
P	S	Hach 2100P - turbidimeter	
P	S	Grundfos pump	Isopropanol, Distilled Water
P	S	Dedicated teflon-lined polyethylene tubing	N/A

NOTES: * Had respirator on.

Field Sampling Form

Project Name: NCBC Davisville IR Program Site 09 Project No.: 29600.32 Task: 3241 Date: 04/13/95
Well ID: MW-19I Personnel: JDR, JPS Start Time: 1600 Finish Time: 1700

Air M nit ring

Equipment Used (Make/Model/Serial No.): HNu, 101, 11.7 eV, S/N 901723
Calibration Information: 70 ppm w 100 ppm isobutylene, SPAN = 6.18
Ambient Air Reading: 0.8 ppm Well Headspace Reading: 20 ppm

Well Data/Integrity

Well Locked X Yes __ No
Protective Casing Secure X Yes __ No
Concrete Collar Intact X Yes __ No
Other: _____
Protective Casing Stick-Up (ft): _____
Casing/Well Difference (ft): _____

Well Material: __ PVC / X SS / Other_____
Well Diameter: X 2-in. / __ 4-in. / __ 6-in. / Other_____
Water Level Equip. Used: X Elect. Cond. Probe
__ Interface Probe
__ Press. Transducer
__ _____
__ _____

Water Level Data
Measured from:

Depth to Bottom of Well: 31.00 (ft)
Depth to Top of Water: 13.69 (ft)
Height of Water Column: 17.31 (ft)

X

Volume/ft
Gal/ft (Well ID)

__0.04 (1 in.) __1.04 (5 in.)
X 0.17 (2 in.) __1.50 (6 in.)
__0.38 (3 in.) __2.60 (8 in.)
__0.66 (4 in.)

=

Gallons/Well Volume: 2.94

Purge Data Sample Collected Using: __ Bailer / X Pump / Other_____

Parameter	Initial	Volume 1	Volume 2	Volume 3	Volume 4	Volume 5	Volume __
Gallons	0	3	6	9			
Time	1620	1629	1638	1644			
Temperature (°C)	13.4	14.2	14.0	13.6			
pH	6.84	6.89	6.95	6.94			
Conductivity	1,290	1,270	1,240	1,250			
DO (ppm)	14.38	12.91	1.85	12.30			
Turbidity (NTUs)	NR*	702	219	190			
Odor							
Salinity/Eh	0.5	0.6	0.5	0.5			

Sample Collection

Analytical Parameter	X if Field Filtered	Volume Required/ Sample Container	Sample ID	Preservation Method
TCL VOC				
Na+ Sodium				
TDS, Cl, salinity				

Equipment Decon Identify equipment used (i.e., pumps, bailers, tubing, filters, etc.)

P = Purge S = Sample		Equipment Used	Decon Method
P	S	Grundfos pump	Isopropanol, Distilled Water
P	S	(Dedicated) teflon-lined	N/A
P	S	polyetheylene tubing	
P	S		
P	S		

NOTES: * NR = No reading was taken.

Field Sampling F rm

Project Name: NCBC Davisville IR Program Site 09 Project No.: 29600.32 Task: 3241 Date: 04/12/95
Well ID: MW-20S Personnel: JDR, JS Start Time: 1030 Finish Time: 1335

Air Monitoring
Equipment Used (Make/Model/Serial No.): HNu, PI101, 501027
Calibration Information: SPAN = 0.28
Ambient Air Reading: 0.8 ppm Well Headspace Reading: 0.8 ppm

Well Data/Integrity

Well Locked	X Yes __ No	Well Material:	X PVC / __ SS / Other_____
Protective Casing Secure	X Yes __ No	Well Diameter:	X 2-in. / __ 4-in. / __ 6-in. / Other_____
Concrete Collar Intact	X Yes __ No	Water Level Equip. Used:	__ Elect. Cond. Probe
Other: _____			X Interface Probe
Protective Casing Stick-Up (ft): _____			__ Press. Transducer
Casing/Well Difference (ft): _____			__ _____
			__ _____

Water Level Data
Measured from: Top of PVC

Depth to Bottom of Well: 21.69 (ft)
Depth to Top of Water: 16.33 (ft)
Height of Water Column: 5.36 (ft)

X

Volume/ft
Gal/ft (Well ID)

__0.04 (1 in.) __1.04 (5 in.)
X 0.17 (2 in.) __1.50 (6 in.)
__0.38 (3 in.) __2.60 (8 in.)
__0.66 (4 in.)

=

Gallons/Well Volume: 0.91

Purge Data Sample Collected Using: __ Bailer / x Pump / Other_____

Parameter	Initial	Volume 1	Volume 2	Volume 3	Volume __	Volume __	Volume __
Gallons	0	2	4	6			
Time	1317	1321	1325	1329			
Temperature (°C)	10.8	11.5	11.7	11.6			
pH	7.18	7.24	7.22	7.22			
Conductivity	1,370	1,410	1,370	1,380			
DO (ppm)	0.94	1.74	1.98	2.55			
Turbidity (NTUs)	>999	14.2	5.14	3.93			
Odor	Yes*	Yes	Yes	Yes			
Salinity/Eh	0.6/NR	0.6/-121.6	0.6/-121.5	0.6/-120.1			

Sample Collection

Analytical Parameter	X if Field Filtered	Volume Required/ Sample Container	Sample ID	Preservation Method
TCL VOC				
Na+ Sodium				
TDS, Cl, salinity				

Equipment Decon Identify equipment used (i.e., pumps, bailers, tubing, filters, etc.)

P = Purge S = Sample		Equipment Used	Decon Method
P	S	Grundfos pump	Isopropanol, Distilled Water
P	S	(Dedicated) teflon-lined	N/A
P	S	polyetheylene tubing	
P	S		
P	S		

NOTES: * Unknown, possibly acetone.
NR = No reading

Field Sampling F rm

Project Name: NCBC Davisville IR Program Site 09 Project No.: 29600.32 Task: 3241 Date: 04/13/95
Well ID: MW-20I Personnel: JDR, JS Start Time: 1315 Finish Time: 1400

Air Monitoring
Equipment Used (Make/Model/Serial No.): HNu, PI101, 501027
Calibration Information: SPAN = 0.28
Ambient Air Reading: 0.8 ppm Well Headspace Reading: 50 ppm

Well Data/Integrity

Well Locked X Yes __ No
Protective Casing Secure X Yes __ No
Concrete Collar Intact X Yes __ No
Other: _____
Protective Casing Stick-Up (ft): _____
Casing/Well Difference (ft): _____

Well Material: __ PVC / X SS / Other_____
Well Diameter: X 2-in. / __ 4-in. / __ 6-in. / Other_____
Water Level Equip. Used: __ Elect. Cond. Probe
X Interface Probe
__ Press. Transducer
__ _____
__ _____

Water Level Data
Measured from: Top of SS Riser

Depth to Bottom of Well: 33.65 (ft)
Depth to Top of Water: 15.90 (ft)
Height of Water Column: 17.75 (ft)

X

Volume/ft
Gal/ft (Well ID)

__0.04 (1 in.) __1.04 (5 in.)
X 0.17 (2 in.) __1.50 (6 in.)
__0.38 (3 in.) __2.60 (8 in.)
__0.66 (4 in.)

=

Gallons/Well Volume: 3.02

Purge Data Sample Collected Using: __ Bailer / X Pump / Other_____

Parameter	Initial	Volume 1	Volume 2*	Volume 1	Volume 2	Volume 3	Volume 4
Gallons	0	3		0	3	6	9
Time	1605	1612		1317	1323	1330	1335
Temperature (°C)	11.2	12.4		13.3	14.2	14.2	14.2
pH	6.58	6.52		6.56	6.56	6.51	6.48
Conductivity	3,010	2,830		2,810	2,760	2,680	2,480
DO (ppm)	1.78	2.26		11.97	11.32	1.98	2.54
Turbidity (NTUs)	>999	>999		512	262	>999	>999
Odor	Yes	Yes		(IN RESPIRATORS)			
Salinity/Eh	1.4/NR	1.3/NR		0.13/+110.4	0.1**	0.13/-28.7	0.11/-19
HNu						90 ppm in bucket	

Sample Collection

Analytical Parameter	X if Field Filtered	Volume Required/ Sample Container	Sample ID	Preservation Method
TCL VOC				
Na+ Sodium				
TDS, Cl, salinity				

Equipment Decon Identify equipment used (i.e., pumps, bailers, tubing, filters, etc.)

P = Purge S = Sample		Equipment Used	Decon Method
P	S	Grundfos pump	Isopropanol, Distilled Water
P	S	(Dedicated) teflon-lined	N/A
P	S	polyetheylene tubing	
P	S		

NOTES: * Canceled 4/12 due to fumes from well. Restarted 4/13/95.
** Meter never settled.

Fi ld Sampling F rm

Project Name: NCBC Davisville IR Program Site 09 Project No.: 29600.32 Task: 3241 Date: 04/13/95
Well ID: MW-20D Personnel: JDR, JPS Start Time: 1415 Finish Time: 1545

Air Monitoring
Equipment Used (Make/Model/Serial No.): HNu, PI101, 501027
Calibration Information: SPAN = 0.28
Ambient Air Reading: 2.5 ppm Well Headspace Reading: 2.8 ppm

Well Data/Integrity

Well Locked	X Yes __ No	Well Material:	__ PVC / X SS / Other_____
Protective Casing Secure	X Yes __ No	Well Diameter:	X 2-in. / __ 4-in. / __ 6-in. / Other_____
Concrete Collar Intact	X Yes __ No	Water Level Equip. Used:	__ Elect. Cond. Probe
Other: _____			X Interface Probe
Protective Casing Stick-Up (ft): _____			__ Press. Transducer
Casing/Well Difference (ft): _____			__ _____
			__ _____

Water Lev l Data
Measured from: Top of Riser

Depth to Bottom of Well: 62.90 (ft)
Depth to Top of Water: 16.40 (ft)
Height of Water Column: 46.50 (ft)

X

Volume/ft
Gal/ft (Well ID)

__0.04 (1 in.) __1.04 (5 in.)
X 0.17 (2 in.) __1.50 (6 in.)
__0.38 (3 in.) __2.60 (8 in.)
__0.66 (4 in.)

=

Gallons/Well Volume: 7.90

Purge Data Sample Collected Using: __ Bailer / x Pump / Other_____

Parameter	Initial	Volume 1	Volume 2	Volume 3	Volume __	Volume __	Volume __
Gallons	0	8	16	24	32		
Time	1432	1447	1505	1520	1536		
Temperature (°C)	11.4	12.6	12.5	12.5	12.4		
pH	9.15	8.81	8.83	8.81	8.74		
Conductivity	541	596	578	608	580		
DO (ppm)	2.90	10.23	2.43	10.27	10.23		
Turbidity (NTUs)	151	163	13.0	3.28	2.33		
Odor							
Salinity/Eh	0.2/*	0.2/*	0.2/-3.6	0.2/+20.66	0.2/+31.26		

* Meter never settled.

Sample Collection

Analytical Parameter	X if Field Filtered	Volume Required/ Sample Container	Sample ID	Preservation Method
TCL VOC				
Na+ Sodium				
TDS, Cl, salinity				

Equipment Decon Identify equipment used (i.e., pumps, bailers, tubing, filters, etc.)

P = Purge S = Sample		Equipment Used	Decon Method
P	S	Horiba - pH, cond., salinity, T, DO	
P	S	Orion - Eh, pH	
P	S	Hach 2100P - turbidimeter	
P	S	Grundfos pump	Isopropanol, Distilled Water
P	S	Dedicated teflon-lined polyethylene tubing	N/A

NOTES: *Meter never settled

Fi ld Sampling Form

Project Name: NCBC Davisville IR Program Site 09 Project No.: 29600.32 Task: 3241 Date: 04/17/95
Well ID: MW-20R Personnel: J. Shapiro Start Time: 1611 Finish Time: 1740

Air Monitoring
Equipment Used (Make/Model/Serial No.): _____
Calibration Information: _____
Ambient Air Reading: 1.4 ppm Well Headspace Reading: 8.4 ppm

Well Data/Integrity

Well Locked	X Yes __ No	Well Material:	X PVC / __ SS / Other_____
Protective Casing Secure	X Yes __ No	Well Diameter:	X 2-in. / __ 4-in. / __ 6-in. / Other_____
Concrete Collar Intact	X Yes __ No	Water Level Equip. Used:	X Elect. Cond. Probe
Other: _____			__ Interface Probe
Protective Casing Stick-Up (ft): _____			__ Press. Transducer
Casing/Well Difference (ft): _____			__ _____
			__ _____

Water Lev l Data
Measured from: Top of Riser

Depth to Bottom of Well: 82.58 (ft)
Depth to Top of Water: 16.27 (ft)
Height of Water Column: 66.31 (ft)

X

Volume/ft
Gal/ft (Well ID)

__0.04 (1 in.) __1.04 (5 in.)
X 0.17 (2 in.) __1.50 (6 in.)
__0.38 (3 in.) __2.60 (8 in.)
__0.66 (4 in.)

= Gallons/Well Volume: 11.3

Purge Data Sample Collected Using: __ Bailer / x Pump / Other_____

Parameter	Initial	Volume 1	Volume 2	Volume 3	Volume __	Volume __	Volume __
Gallons	0	5	8				
Time	1635	1643	1730				
Temperature (°C)	13.9	14.2	14.5				
pH	7.12	7.80	8.26				
Conductivity	1,330	1,380	1,790				
DO (ppm)	2.16	3.03	2.95				
Turbidity (NTUs)	6.18	6.18	17.9				
Odor	---	---	---				
Salinity/Eh	0.6/12.3	0.6/38.6	0.8/46.4				

Sample Collection

Analytical Parameter	X if Field Filtered	Volume Required/ Sample Container	Sample ID	Preservation Method
TCL VOC				
Na+ Sodium				
TDS, Cl, salinity				

Equipment Decon Identify equipment used (i.e., pumps, bailers, tubing, filters, etc.)

P = Purge S = Sample		Equipment Used	Decon Method
P	S	YSI - DO	
P	S	Horiba	
P	S	Hach 2100P - turbidity	
P	S	Orion - Eh	
P	S	Grundfos pump	Isopropanol, Distilled Water
P	S	Dedicated teflon-lined polyethylene tubing	N.A

NOTES: Pumped out approximately 5 gal. Collected parameter sample except for eH and DO. Pump kicked out. Collected DO and eH sample approximately 10 minutes after other parameter samples.

Field Sampling Form

Project Name: NCBC Davisville IR Program Site 09 Project No.: 29600.32 Task: 3241 Date: 04/14/95
Well ID: MW-21S Personnel: J. Friesen, J. Shapiro Start Time: 1248 Finish Time: 1500

Air Monitoring
Equipment Used (Make/Model/Serial No.): _____
Calibration Information: _____
Ambient Air Reading: 0.8 ppm Well Headspace Reading: 6 ppm

Well Data/Integrity

Well Locked	X Yes __ No	Well Material:	__ PVC / __ SS / Other_____
Protective Casing Secure	X Yes __ No	Well Diameter:	X 2-in. / __ 4-in. / __ 6-in. / Other_____
Concrete Collar Intact	X Yes __ No	Water Level Equip. Used:	X Elect. Cond. Probe
Other: _____			__ Interface Probe
Protective Casing Stick-Up (ft): _____			__ Press. Transducer
Casing/Well Difference (ft): _____			__ _____
			__ _____

Water Level Data
Measured from: Top of Riser

Depth to Bottom of Well: 17.36 (ft)
Depth to Top of Water: 9.08 (ft)
Height of Water Column: 8.28 (ft)

X

Volume/ft Gal/ft (Well ID)

__0.04 (1 in.) __1.04 (5 in.)
X 0.17 (2 in.) __1.50 (6 in.)
__0.38 (3 in.) __2.60 (8 in.)
__0.66 (4 in.)

=

Gallons/Well Volume: 1.4

Purge Data Sample Collected Using: __ Bailer / X Pump / Other_____

Parameter	Initial	Volume 1	Volume 2	Volume 3	Volume 4	Volume 5	Vol. 6	Vol. 7
Gallons	0	1.5	3.0	4.5	6.0	7.5	9.0	10.0
Time	1300	1310	1315	1335	1340	1420	1425	1450
Temperature (°C)	9.9	10.7	11.3	9.5	10.9	9.4	10.8	10.6
pH	6.85	6.95	6.94	6.94	6.99	6.96	7.00	6.96
Conductivity	832	846	1,370	829	1,170	821	1,040	849
DO (ppm)	13.18	12.21	11.06	13.15	11.95	13.06	11.9	11.84
Turbidity (NTUs)	410	277	>999	228	416	115	>999	246
Odor	Solv	Solv/Sulfur	Solv/Sulfur	Solv/Sulfur	---	Slight solv	---	Solv
Salinity/Eh	0.3/ -133.2	0.3/ -154.7	0.6/ -145.6	0.3/ -122.6	0.5/ -140.4	0.3/ -132.5	0.4/ -131.6	0.3/ -132.8

Sample Collection

Analytical Parameter	X if Field Filtered	Volume Required/ Sample Container	Sample ID	Preservation Method
1455 ? collected samples				
VOA		2 40 mil VOA		HCl
TCL. VOC				
Na+ Sodium		1 500 ml poly		HNO_3
TDS, Cl, Salinity		1 500 ml poly		

Equipment Decon Identify equipment used (i.e., pumps, bailers, tubing, filters, etc.)

P = Purge S = Sample		Equipment Used	Decon Method
P	S	Grundfos pump	Isopropanol, Distilled Water
P	S	(Dedicated) teflon-lined	N/A
P	S	polyetheylene tubing	
P	S		

NOTES: Well going dry after approximately 2 gal. Will let well recharge. Volume 2 got very silty, throwing parameters off.
1330 - began purging; 1340 - pumped dry after fourth volume; 1425 - pumped dry after approximately 9 gallons

Field Sampling Form

Project Name: NCBC Davisville IR Program Site 09 Project No.: 29600.32 Task: 3241 Date: 04/14/95
Well ID: MW-21D Personnel: J. Shapiro Start Time: 0910 Finish Time: 1120

Air Monitoring
Equipment Used (Make/Model/Serial No.): _____
Calibration Information: _____
Ambient Air Reading: 8 ppm Well Headspace Reading: 20 ppm

Well Data/Integrity

Well Locked	X Yes __ No	Well Material:	X PVC / __ SS / Other_____
Protective Casing Secure	X Yes __ No	Well Diameter:	X 2-in. / __ 4-in. / __ 6-in. / Other_____
Concrete Collar Intact	X Yes __ No	Water Level Equip. Used:	X Elect. Cond. Probe
Other: _____			__ Interface Probe
Protective Casing Stick-Up (ft): _____			__ Press. Transducer
Casing/Well Difference (ft): _____			__ _____
			__ _____

Water L vel Data
Measured from: Top of Riser

Depth to Bottom of Well: 47.61 (ft)
Depth to Top of Water: 9.60 (ft)
Height of Water Column: 38.01 (ft)

X

Volume/ft
Gal/ft (Well ID)

__0.04 (1 in.) __1.04 (5 in.)
X 0.17 (2 in.) __1.50 (6 in.)
__0.38 (3 in.) __2.60 (8 in.)
__0.66 (4 in.)

=

Gallons/Well Volume: 6.5

Purge Data Sample Collected Using: __ Bailer / x Pump / Other_____

Parameter	Initial	Volume 1	Volume 2	Volume 3	Volume 4	Volume 5	Volume 6
Gallons	0	6.5	13.0	19.5	27	33.5	40
Time	0915	0925	0940	0955	1010	1025	1040
Temperature (°C)	10.6	11.9	12.2	12.1	12.2	12.2	12.4
pH	11.17	10.21	9.40	9.00	8.83	8.44	8.15
Conductivity	834	713	653	651	663	668	685
DO (ppm)	10.94	10.83	11.06	11.54	11.26	11.46	11.78
Turbidity (NTUs)	87.9	10.1	13.2	9.05	8.20	6.36	4.99
Odor	---	---	---	---	---	---	---
Salinity/Eh	0.3/-9.5	0.3/-70.0	0.2/-36.4	0.2/-96.4	0.2/-139.0	0.2/-160.6	0.2/-183.3

Sample Collection

Analytical Parameter	X if Field Filtered	Volume Required/ Sample Container	Sample ID	Preservation Method
TCL VOC				
Na+ Sodium				
TDS, Cl, salinity				

Equipment Decon Identify equipment used (i.e., pumps, bailers, tubing, filters, etc.)

P = Purge S = Sample		Equipment Used	Decon Method
P	S	Grundfos pump	Isopropanol, Distilled Water
P	S	(Dedicated) teflon-lined	N/A
P	S	polyetheylene tubing	
P	S		
P	S		

NOTES:

Fi ld Sampling Form

Project Name: NCBC Davisville IR Program Site 09 Project No.: 29600.32 Task: 3241 Date: 04/14/95
Well ID: MW-21D Personnel: J. Shapiro Start Time: 0910 Finish Time: 1120

Air Monitoring
Equipment Used (Make/Model/Serial No.): _____
Calibration Information: _____
Ambient Air Reading: 8 ppm Well Headspace Reading: 20 ppm

Well Data/Integrity

Well Locked	X Yes __ No	Well Material:	X PVC / __ SS / Other_____
Protective Casing Secure	X Yes __ No	Well Diameter:	X 2-in. / __ 4-in. / __ 6-in. / Other_____
Concrete Collar Intact	X Yes __ No	Water Level Equip. Used:	X Elect. Cond. Probe
Other: _____			__ Interface Probe
Protective Casing Stick-Up (ft): _____			__ Press. Transducer
Casing/Well Difference (ft): _____			__ _____
			__ _____

Water Level Data
Measured from: Top of Riser

Depth to Bottom of Well: _____ (ft)
Depth to Top of Water: _____ (ft)
Height of Water Column: _____ (ft)

X

Volume/ft Gal/ft (Well ID)

_0.04 (1 in.) _1.04 (5 in.)
X 0.17 (2 in.) _1.50 (6 in.)
_0.38 (3 in.) _2.60 (8 in.)
_0.66 (4 in.)

=

Gallons/Well Volume: 6.5

Purge Data Sample Collected Using: __ Bailer / x Pump / Other_____

Parameter	Volume 7	Volume 8	Volume 9	Volume 10	Volume __	Volume __	Volume __
Gallons	46.5	53.0	59.5	66			
Time	1050	1100	1110	1120			
Temperature (°C)	12.2	12.2	12.3	12.3			
pH	7.80	7.54	7.42	7.22			
Conductivity	684	683	677	674			
DO (ppm)	11.69	11.71	11.69	11.82			
Turbidity (NTUs)	6.22	4.89	3.21	1.5			
Odor	Slight sulfur	Slight sulfur	—	Slight sulfur			
Salinity/Eh	0.2/-195.9	0.2/-183.5	0.2/-173.7	0.2/-162.6			

Sample Collection

Analytical Parameter	X if Field Filtered	Volume Required/ Sample Container	Sample ID	Preservation Method
TCL VOC				
Na+ Sodium				
TDS, Cl, salinity				

Equipment Decon Identify equipment used (i.e., pumps, bailers, tubing, filters, etc.)

P = Purge S = Sample		Equipment Used	Decon Method
P	S	Grundfos pump	Isopropanol, Distilled Water
P	S	(Dedicated) teflon-lined	N/A
P	S	polyetheylene tubing	
P	S		
P	S		

NOTES: 1120 - JF collected samples.

Fi ld Sampling Form

Project Name: NCBC Davisville IR Program Site 09 Project No.: 29600.32 Task: 3241 Date: 04/07/95
Well ID: MW-22S Personnel: JDR, JF, JS, DS Start Time: 1000 Finish Time: 1115

Air Monitoring
Equipment Used (Make/Model/Serial No.): _____
Calibration Information: _____
Ambient Air Reading: 1.2 ppm Well Headspace Reading: 1.8 ppm

Well Data/Integrity

Well Locked	X Yes __ No	Well Material:	X PVC / __ SS / Other_____
Protective Casing Secure	X Yes __ No	Well Diameter:	X 2-in. / __ 4-in. / __ 6-in. / Other_____
Concrete Collar Intact	X Yes __ No	Water Level Equip. Used:	__ Elect. Cond. Probe
Other: _____			X Interface Probe
Protective Casing Stick-Up (ft): _____			__ Press. Transducer
Casing/Well Difference (ft): _____			__ _____
			__ _____

Water L vel Data
Measured from: Top of PVC

Depth to Bottom of Well: 11.42 (ft)
Depth to Top of Water: 3.24 (ft)
Height of Water Column: 8.18 (ft)

X

Volume/ft Gal/ft (Well ID)
__0.04 (1 in.) __1.04 (5 in.)
__0.17 (2 in.) __1.50 (6 in.)
__0.38 (3 in.) __2.60 (8 in.)
__0.66 (4 in.)

=

Gallons/Well Volume: 1.4

Purge Data Sample Collected Using: __ Bailer / x Pump / Other_____

Parameter	Initial	Volume 1	Volume 2	Volume 3	Volume 4	Volume 5	Volume __
Gallons	0	1.5	3	5.5	6		
Time	1012	1017	1024	1040	1058		
Temperature (°C)	6.6	8.0	9.0	8.9	8.3		
pH	6.04	6.16	6.36	6.44	6.48		
Conductivity	446	575	634	695	682		
DO (ppm)	12.45	10.95	2.32	10.89	2.20		
Turbidity (NTUs)	16.5	>999	>999	>999	290		
Odor				H_2S			
Salinity/Eh	0.01/+48.6	0.02/+33.5	0.02/+13	0.02/-12.6	0.02/-28.8		

Sample Collection

Analytical Parameter	X if Field Filtered	Volume Required/ Sample Container	Sample ID	Preservation Method
TCL VOC				
Na+ Sodium				
TDS, Cl, salinity				

Equipment Decon Identify equipment used (i.e., pumps, bailers, tubing, filters, etc.)

P = Purge S = Sample		Equipment Used	Decon Method
P	S	Grundfos pump	Isopropanol, Distilled Water
P	S	(Dedicated) teflon-lined	N/A
P	S	polyetheylene tubing	
P	S		
P	S		

NOTES: Heavy silt. Well pumped dry at 4 gal - let it recharge. Well pumped dry at 6 gal - let it recharge.

Field Sampling Form

Project Name: NCBC Davisville IR Program Site 09 Project No.: 29600.32 Task: 3241 Date: 04/07/95
Well ID: MW-22S Personnel: JDR, JF, JS, DS Start Time: 1000 Finish Time: 1115

Air Monitoring
Equipment Used (Make/Model/Serial No.): _____
Calibration Information: _____
Ambient Air Reading: 1.2 ppm Well Headspace Reading: 1.8 ppm

Well Data/Integrity

Well Locked	X Yes __ No	Well Material:	X PVC / __ SS / Other_____
Protective Casing Secure	X Yes __ No	Well Diameter:	X 2-in. / __ 4-in. / __ 6-in. / Other_____
Concrete Collar Intact	X Yes __ No	Water Level Equip. Used:	__ Elect. Cond. Probe
Other: _____			X Interface Probe
Protective Casing Stick-Up (ft): _____			__ Press. Transducer
Casing/Well Difference (ft): _____			__ _____
			__ _____

Water Level Data
Measured from: Top of PVC

Depth to Bottom of Well: 11.42 (ft)
Depth to Top of Water: 3.24 (ft)
Height of Water Column: 8.18 (ft)

X

Volume/ft
Gal/ft (Well ID)

__0.04 (1 in.) __1.04 (5 in.)
__0.17 (2 in.) __1.50 (6 in.)
__0.38 (3 in.) __2.60 (8 in.)
__0.66 (4 in.)

=

Gallons/Well Volume: 1.4

Purge Data Sample Collected Using: __ Bailer / X Pump / Other_____

Parameter	Initial	Volume 1	Volume 2	Volume 3	Volume 4	Volume 5	Volume __
Gallons	0	1.5	3	5.5	6		
Time	1012	1017	1024	1040	1058		
Temperature (°C)	6.6	8.0	9.0	8.9	8.3		
pH	6.04	6.16	6.36	6.44	6.48		
Conductivity	446	575	634	695	682		
DO (ppm)	12.45	10.95	2.32	10.89	2.20		
Turbidity (NTUs)	16.5	>999	>999	>999	290		
Odor				H_2S			
Salinity/Eh	0.01/+48.6	0.02/+33.5	0.02/+13	0.02/-12.6	0.02/-28.8		

Sample Collection

Analytical Parameter	X if Field Filtered	Volume Required/ Sample Container	Sample ID	Preservation Method

Equipment Decon Identify equipment used (i.e., pumps, bailers, tubing, filters, etc.)

P = Purge S = Sample		Equipment Used	Decon Method
P	S		
P	S		
P	S		
P	S		
P	S		

NOTES: Heavy silt. Well pumped dry at 4 gal - let it recharge. Well pumped dry at 6 gal - let it recharge.

Field Sampling Form

Project Name: NCBC Davisville IR Program Site 09 Project No.: 29600.32 Task: 3241 Date: 04/12/95
Well ID: MW-23S Personnel: J. Friesen J. Shapiro Start Time: 0940 Finish Time: 1100

Air Monitoring
Equipment Used (Make/Model/Serial No.): _____
Calibration Information: _____
Ambient Air Reading: 4 ppm Well Headspace Reading: 3 ppm

Well Data/Integrity

Well Locked	X Yes __ No	Well Material:	X PVC / __ SS / Other_____
Protective Casing Secure	X Yes __ No	Well Diameter:	X 2-in. / __ 4-in. / __ 6-in. / Other_____
Concrete Collar Intact	X Yes __ No	Water Level Equip. Used:	X Elect. Cond. Probe
Other: _____			__ Interface Probe
Protective Casing Stick-Up (ft): _____			__ Press. Transducer
Casing/Well Difference (ft): _____			__ _____
			__ _____

Wat r Level Data
Measured from: Top of Riser

Depth to Bottom of Well: 28.60 (ft)
Depth to Top of Water: 18.28 (ft)
Height of Water Column: 10.32 (ft)

X

Volume/ft Gal/ft (Well ID)

__0.04 (1 in.) __1.04 (5 in.)
X 0.17 (2 in.) __1.50 (6 in.)
__0.38 (3 in.) __2.60 (8 in.)
__0.66 (4 in.)

=

Gallons/Well Volume: 1.8

Purge Data Sample Collected Using: __ Bailer / x Pump / Other_____

Parameter	Initial	Volume 1	Volume 2	Volume 3	Initial	Volume 4	Volume 5	Volume 6	Volume 7
Gallons	0	2	5	7	(7)	9	11	13	15
Time	0950	0955	1000	1005	1025	1028	1032	1047	1052
Temperature (°C)	12.2	13.8	13.2	13.9	13.0	13.1	13.7	12.4	13.6
pH	7.10	7.23	7.16	7.07	7.22	7.22	7.17	7.21	7.16
Conductivity	412	1,380	1,780	3,250	1,200	1,320	1,410	1,250	1,400
DO (ppm)	1.34	1.42	1.36	1.15	1.57	0.99	NR	1.51	0.69
Turbidity (NTUs)	33.9	209	32.3	23.5	81.6	142	21.3	198	28.9
Odor	—	Sulfur/Solv							
Salinity/Eh	4.0/-65.6	1.2/-143	1.5/-118.2	3.0/-76.3	1.2/-144.9	1.2/-145.8	1.2/-130.6	1.0/-140.6	1.2/-135.8

Sample Collection

Analytical Parameter	X if Field Filtered	Volume Required/ Sample Container	Sample ID	Preservation Method
TCL VOC				
Na+ Sodium				
TDS, Cl, salinity				

Equipment Decon Identify equipment used (i.e., pumps, bailers, tubing, filters, etc.)

P = Purge S = Sample		Equipment Used	Decon Method
P	S	Orion - Eh, pH	
P	S	Hach 2100P - turbid	
P	S	YSI - DO, conductivity, salinity	
P	S	Grundfos pump	Isopropanol, Distilled Water
P	S	Dedicated teflon-lined polyethylene tubing	N/A

NOTES:

Fi ld Sampling Form

Project Name: NCBC Davisville IR Program Site 09 Project No.: 29600.32 Task: 3241 Date: 04/11&12/95
Well ID: MW-23D Personnel: J. Friesen, J. Shapiro Start Time: 1620 Finish Time: 1145

Air Monitoring
Equipment Used (Make/Model/Serial No.): _____
Calibration Information: _____
Ambient Air Reading: 1 ppm Well Headspace Reading: 6 ppm

Well Data/Integrity

Well Locked	X Yes __ No	Well Material:	__ PVC / X SS / Other_____
Protective Casing Secure	X Yes __ No	Well Diameter:	X 2-in. / __ 4-in. / __ 6-in. / Other_____
Concrete Collar Intact	X Yes __ No	Water Level Equip. Used:	X Elect. Cond. Probe
Other: _____			__ Interface Probe
Protective Casing Stick-Up (ft): _____			__ Press. Transducer
Casing/Well Difference (ft): _____			__ _____
			__ _____

Water Level Data
Measured from: Top of Riser

Depth to Bottom of Well: 60.35 (ft)
Depth to Top of Water: 17.67 (ft)
Height of Water Column: 42.68 (ft)

X

Volume/ft
Gal/ft (Well ID)

__0.04 (1 in.) __1.04 (5 in.)
X 0.17 (2 in.) __1.50 (6 in.)
__0.38 (3 in.) __2.60 (8 in.)
__0.66 (4 in.)

=

Gallons/Well Volume: 7.3

Purge Data Sample Collected Using: __ Bailer / x Pump / Other_____

Parameter	Initial	Volume 1	Initial	Volume 2	Initial	Volume 3	Volume __
Gallons	0	7.5	7.5	15	15	22.5	
Time	1620	1630	0843	0900	1133	1145	
Temperature (°C)	13.8	15.1	12.5	13.5	12.8	14.1	
pH	6.90	6.83	6.89	6.87	7.05	6.92	
Conductivity	1,700	1,700	1,120	1,100	1,580	1,800	
DO (ppm)	2.31	1.06	3.63	1.22	2.34	2.10	
Turbidity (NTUs)	176	362	847	209	>999	251	
Odor	---	---	---	---	---	---	
Salinity/Eh	1.5/88.6	1.5/12.1	1.0/40.5	1.0/-10.5	1.5/-19.0	1.5/-5.7	

Sample Collection

Analytical Parameter	X if Field Filtered	Volume Required/ Sample Container	Sample ID	Preservation Method
TCL VOC				
Na+ Sodium				
TDS, Cl, salinity				

Equipment Decon Identify equipment used (i.e., pumps, bailers, tubing, filters, etc.)

P = Purge S = Sample		Equipment Used	Decon Method
P	S	Grundfos submersible	Deconned grundfos; tubing discarded
P	S	Teflon-lined tubing	
P	S	Orion - Eh, pH, Hach 2100P	Isopropanol
P	S	Turbidimeter, YSI	Distilled water

NOTES: 4/11 purged 7.5 gals. 4/12 purged 7.5 gals, let well recharge, purged another 7.5 gals.

Field Sampling Form

Project Name: NCBC Davisville IR Program Site 09 Project No.: 29600.32 Task: 3241 Date: 04/17/95
Well ID: MW09-24S Personnel: J. Shapiro, JS Start Time: 1000 Finish Time: 1120

Air Monitoring
Equipment Used (Make/Model/Serial No.): Grunfos
Calibration Information:
Ambient Air Reading: 0.4 ppm Well Headspace Reading: 2.0 ppm

Well Data/Integrity

Well Locked X Yes __ No
Protective Casing Secure X Yes __ No
Concrete Collar Intact X Yes __ No
Other:
Protective Casing Stick-Up (ft):
Casing/Well Difference (ft):

Well Material: X PVC / __ SS / Other
Well Diameter: X 2-in. / __ 4-in. / __ 6-in. / Other
Water Level Equip. Used: __ Elect. Cond. Probe
X Interface Probe
__ Press. Transducer
__
__

Water L vel Data
Measured from: Top of Riser

Depth to Bottom of Well: 11.40 (ft)
Depth to Top of Water: 4.16 (ft)
Height of Water Column: 7.24 (ft)

X

Volume/ft Gal/ft (Well ID)

0.04 (1 in.) 1.04 (5 in.)
X 0.17 (2 in.) 1.50 (6 in.)
0.38 (3 in.) 2.60 (8 in.)
0.66 (4 in.)

=

Gallons/Well Volume: 1.2

Purge Data Sample Collected Using: __ Bailer / x Pump / Other

Parameter	Initial	Volume 1	Volume 2	Volume 3	Volume 4	Volume 5	Volume 6
Gallons	0	2	4	6	8	10	12
Time	1023	1036	1043	1047	1052	1059	1105
Temperature (°C)	8.0	8.5	9.3	9.1	9.6	9.8	9.6
pH	6.33	6.58	6.68	6.63	6.70	6.71	6.70
Conductivity	382	428	522	426	493	469	496
DO (ppm)	19.2	1.45	1.77	1.52	1.87	1.33	1.05
Turbidity (NTUs)	48.1	6.17	4.86	8.14	2.38	2.51	1.61
Odor	---	---	---	---	---	---	---
Salinity/Eh	0.1/-48.5	0.1/105.4	0.2/-87.9	0.1/-97.8	0.1/-123.8	0.1/-127.1	0.1/-137.7

Sample Collection

Analytical Parameter	X if Field Filtered	Volume Required/ Sample Container	Sample ID	Preservation Method
1108 Samples collected at approximately 14 gal				
TCL VOC				
Na+ Sodium				
TDS, Cl, salinity				

Equipment Decon Identify equipment used (i.e., pumps, bailers, tubing, filters, etc.)

P = Purge S = Sample		Equipment Used	Decon Method
P	S	Grundfos pump	Isopropanol, Distilled Water
P	S	(Dedicated) teflon-lined	N/A
P	S	polyetheylene tubing	
P	S		
P	S		

NOTES:

Field Sampling Form

Project Name: NCBC Davisville IR Program Site 09 Project No.: 29600.32 Task: 3241 Date: 04/17/95
Well ID: MW-24D Personnel: J. Shapiro Start Time: 0945 Finish Time: 1200

Air Monitoring
Equipment Used (Make/Model/Serial No.): _____
Calibration Information: _____
Ambient Air Reading: 0.4 ppm Well Headspace Reading: 4.6 ppm

Well Data/Integrity

Well Locked	X Yes __ No	Well Material:	X PVC / __ SS / Other_____
Protective Casing Secure	X Yes __ No	Well Diameter:	X 2-in. / __ 4-in. / __ 6-in. / Other_____
Concrete Collar Intact	X Yes __ No	Water Level Equip. Used:	__ Elect. Cond. Probe
Other: _____			X Interface Probe
Protective Casing Stick-Up (ft): _____			__ Press. Transducer
Casing/Well Difference (ft): _____			__ _____
			__ _____

Water Level Data
Measured from: Top of Riser

Depth to Bottom of Well: 25.55 (ft)
Depth to Top of Water: 5.86 (ft)
Height of Water Column: 19.69 (ft)

X

Volume/ft
Gal/ft (Well ID)

__0.04 (1 in.) __1.04 (5 in.)
X 0.17 (2 in.) __1.50 (6 in.)
__0.38 (3 in.) __2.60 (8 in.)
__0.66 (4 in.)

=

Gallons/Well Volume: 3.3

Purge Data Sample Collected Using: __ Bailer / x Pump / Other_____

Parameter	Initial	Volume 1	Volume 2	Volume 3	Volume __	Volume __	Volume __
Gallons	0	3.3	3.0	3.0			
Time	1032	1037	1115	1147			
Temperature (°C)	14.6	14.5	13.8	13.4			
pH	6.58	6.61	6.67	6.63			
Conductivity	503	467	457	460			
DO (ppm)	13.20	1.90	2.73	2.67			
Turbidity (NTUs)	18.4	18.8	83.2	26.2			
Odor	No	---	---	---			
Salinity/Eh	0.2/-99.5	0.1/-113.7	0.1/-62.0	0.1/-76.2			

Sample Collection

Analytical Parameter	X if Field Filtered	Volume Required/ Sample Container	Sample ID	Preservation Method
TCL VOC				
Na+ Sodium				
TDS, Cl, salinity				

Equipment Decon Identify equipment used (i.e., pumps, bailers, tubing, filters, etc.)

P = Purge S = Sample		Equipment Used	Decon Method
P	S	Grundfos pump	Isopropanol, Distilled Water
P	S	(Dedicated) teflon-lined	N/A
P	S	polyetheylene tubing	
P	S		
P	S		

NOTES: Pumped dry at 1040; dry again at 1115.

APPENDIX G

PHASE III RI SLUG TEST DATA AND CALCULATIONS

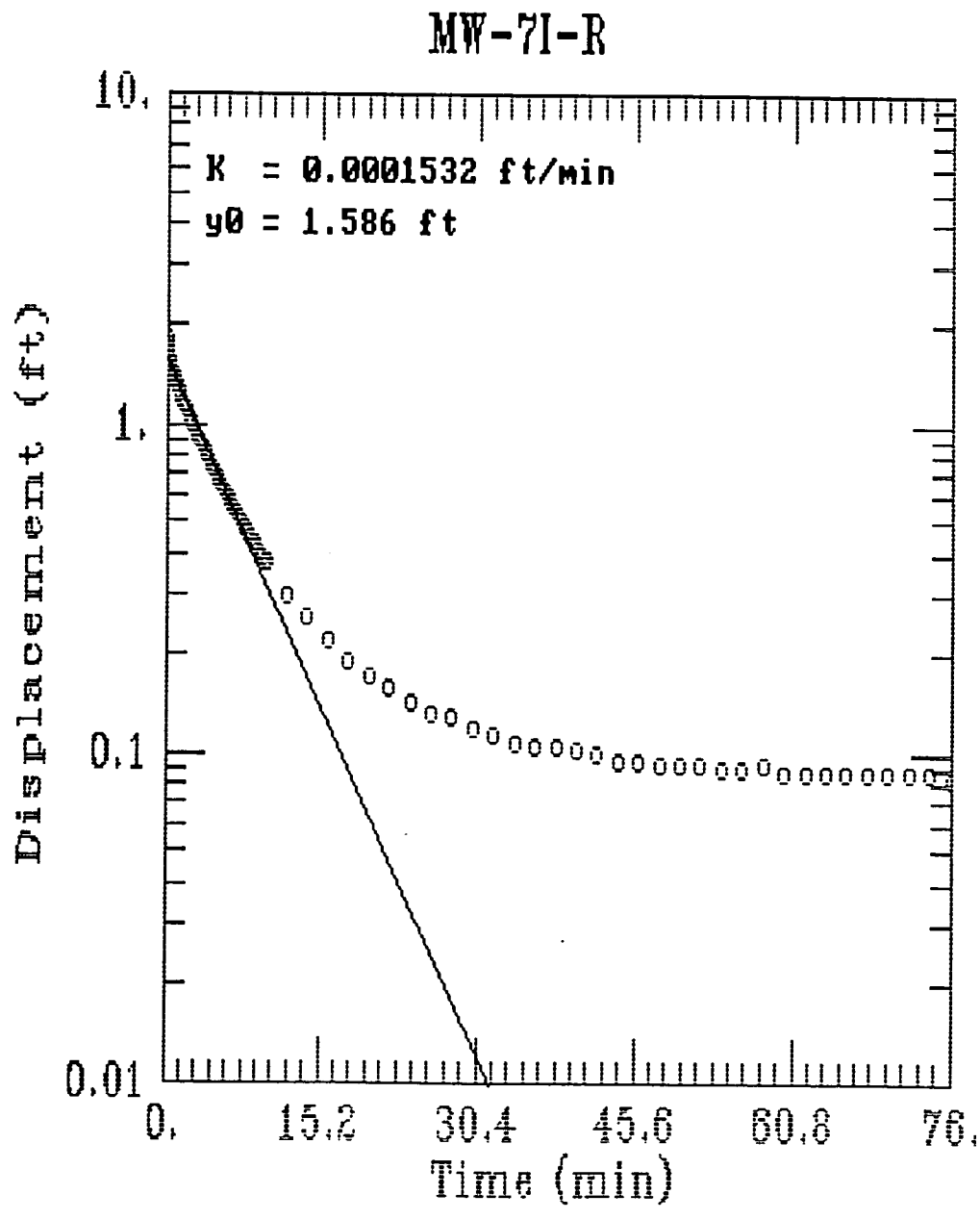
MW-7I-R
K = 0.0001532 ft/min
y0 = 1.586 ft
10.
1.
0.1
0.01
Displacement (ft)
0.
15.2
30.4
45.6
60.8
76.
Time (min)

SE1000C
Environmental Logger
04/27 07:49
MW09-7I-R
Unit# 05001 Test 5

Setups: INPUT 1

Type	Level (F)
Mode	TOC
I.D.	00073
Reference	15.210
Linearity	0.040
Scale factor	10.020
Offset	-0.010
Delay mSEC	50.000

Step 2 04/21 11:43:56

Elapsed Time	INPUT 1
0.0000	15.063
0.0033	15.060
0.0066	15.053
0.0100	15.538
0.0133	17.137
0.0166	18.029
0.0200	17.692
0.0233	17.144
0.0266	17.504
0.0300	17.520
0.0333	17.220
0.0366	17.631
0.0400	17.972
0.0433	18.838
0.0466	18.045
0.0500	16.755
0.0533	16.370
0.0566	16.542
0.0600	17.459
0.0633	17.781
0.0666	16.847
0.0700	16.191
0.0733	16.672
0.0766	17.274
0.0800	17.102
0.0833	16.621
0.0866	16.599
0.0900	16.924
0.0933	17.029
0.0966	16.812
0.1000	16.675
0.1033	16.796
0.1066	16.924
0.1100	16.867
0.1133	16.752
0.1166	16.758
0.1200	16.844
0.1233	16.857
0.1266	16.787
0.1300	16.774
0.1333	16.816
0.1366	16.822
0.1400	16.796
0.1433	16.774
0.1466	16.790
0.1500	16.806
0.1533	16.793
0.1566	16.781
0.1600	16.777
0.1633	16.784
0.1666	16.787
0.1700	16.781
0.1733	16.774
0.1766	16.771
0.1800	16.777
0.1833	16.777
0.1866	16.771
0.1900	16.768
0.1933	16.765
0.1966	16.768
0.2000	16.765
0.2033	16.765
0.2066	16.762
0.2100	16.762
0.2133	16.758
0.2166	16.755
0.2200	16.758
0.2233	16.758
0.2266	16.752
0.2300	16.746
0.2333	16.746
0.2366	16.749
0.2400	16.749
0.2433	16.742
0.2466	16.746
0.2500	16.742
0.2533	16.739
0.2566	16.739
0.2600	16.739
0.2633	16.736
0.2666	16.739
0.2700	16.733
0.2733	16.733
0.2766	16.733
0.2800	16.733
0.2833	16.730
0.2866	16.730
0.2900	16.726
0.2933	16.730
0.2966	16.726
0.3000	16.723
0.3033	16.723
0.3066	16.720
0.3100	16.720
0.3133	16.723
0.3166	16.717
0.3200	16.714
0.3233	16.717
0.3266	16.717
0.3300	16.714
0.3333	16.711
0.3500	16.704
0.3666	16.698
0.3833	16.688
0.4000	16.685
0.4166	16.679
0.4333	16.672
0.4500	16.666
0.4666	16.660
0.4833	16.653
0.5000	16.650
0.5166	16.647
0.5333	16.640
0.5500	16.634
0.5666	16.631
0.5833	16.628
0.6000	16.621
0.6166	16.618
0.6333	16.612
0.6500	16.609
0.6666	16.602
0.6833	16.599
0.7000	16.596
0.7166	16.589
0.7333	16.586
0.7500	16.580
0.7666	16.580
0.7833	16.570
0.8000	16.567
0.8166	16.564
0.8333	16.561
0.8500	16.554
0.8666	16.551
0.8833	16.548
0.9000	16.545
0.9166	16.539
0.9333	16.535
0.9500	16.529
0.9666	16.526
0.9833	16.526
1.0000	16.519
1.2000	16.459
1.4000	16.414
1.6000	16.376
1.8000	16.334
2.0000	16.300
2.2000	16.264
2.4000	16.233
2.6000	16.201
2.8000	16.169
3.0000	16.140
3.2000	16.111
3.4000	16.086
3.6000	16.057
3.8000	16.032
4.0000	16.010
4.2000	15.987
4.4000	15.965
4.6000	15.943
4.8000	15.927
5.0000	15.904
5.2000	15.885
5.4000	15.866
5.6000	15.850
5.8000	15.834
6.0000	15.815
6.2000	15.802
6.4000	15.783
6.6000	15.770
6.8000	15.755
7.0000	15.742
7.2000	15.729
7.4000	15.716
7.6000	15.704
7.8000	15.694
8.0000	15.681
8.2000	15.675
8.4000	15.659
8.6000	15.649
8.8000	15.640
9.0000	15.630
9.2000	15.621
9.4000	15.611
9.6000	15.605
9.8000	15.592
10.0000	15.586
12.0000	15.515
14.0000	15.468
16.0000	15.429
18.0000	15.401
20.0000	15.382
22.0000	15.366
24.0000	15.353
26.0000	15.340
28.0000	15.337
30.0000	15.328
32.0000	15.324
34.0000	15.318
36.0000	15.315
38.0000	15.315
40.0000	15.312
42.0000	15.308
44.0000	15.305
46.0000	15.305
48.0000	15.302
50.0000	15.302
52.0000	15.302
54.0000	15.299
56.0000	15.299
58.0000	15.302
60.0000	15.296
62.0000	15.296
64.0000	15.296
66.0000	15.296
68.0000	15.296
70.0000	15.296
72.0000	15.296
74.0000	15.296
76.0000	15.292

DATA USED IN AQTESOLV MW09-07I-R

0	-0.147	0	0.2	1.555	1	0.6666	1.392	1	9	0.42	1
0.0033	-0.15	0	0.2033	1.555	1	0.6833	1.389	1	9.2	0.411	1
0.0066	-0.157	0	0.2066	1.552	1	0.7	1.386	1	9.4	0.401	1
0.01	0.328	1	0.21	1.552	1	0.7166	1.379	1	9.6	0.395	1
0.0133	1.927	1	0.2133	1.548	1	0.7333	1.376	1	9.8	0.382	1
0.0166	2.819	1	0.2166	1.545	1	0.75	1.37	1	10	0.376	1
0.02	2.482	1	0.22	1.548	1	0.7666	1.37	1	12	0.305	1
0.0233	1.934	1	0.2233	1.548	1	0.7833	1.36	1	14	0.258	1
0.0266	2.294	1	0.2266	1.542	1	0.8	1.357	1	16	0.219	1
0.03	2.31	1	0.23	1.536	1	0.8166	1.354	1	18	0.191	1
0.0333	2.01	1	0.2333	1.536	1	0.8333	1.351	1	20	0.172	1
0.0366	2.421	1	0.2366	1.539	1	0.85	1.344	1	22	0.156	1
0.04	2.762	1	0.24	1.539	1	0.8666	1.341	1	24	0.143	1
0.0433	3.628	1	0.2433	1.532	1	0.8833	1.338	1	26	0.13	1
0.0466	2.835	1	0.2466	1.536	1	0.9	1.335	1	28	0.127	1
0.05	1.545	1	0.25	1.532	1	0.9166	1.329	1	30	0.118	1
0.0533	1.16	1	0.2533	1.529	1	0.9333	1.325	1	32	0.114	1
0.0566	1.332	1	0.2566	1.529	1	0.95	1.319	1	34	0.108	1
0.06	2.249	1	0.26	1.529	1	0.9666	1.316	1	36	0.105	1
0.0633	2.571	1	0.2633	1.526	1	0.9833	1.316	1	38	0.105	1
0.0666	1.637	1	0.2666	1.529	1	1	1.309	1	40	0.102	1
0.07	0.981	1	0.27	1.523	1	1.2	1.249	1	42	0.098	1
0.0733	1.462	1	0.2733	1.523	1	1.4	1.204	1	44	0.095	1
0.0766	2.064	1	0.2766	1.523	1	1.6	1.166	1	46	0.095	1
0.08	1.892	1	0.28	1.523	1	1.8	1.124	1	48	0.092	1
0.0833	1.411	1	0.2833	1.52	1	2	1.09	1	50	0.092	1
0.0866	1.389	1	0.2866	1.52	1	2.2	1.054	1	52	0.092	1
0.09	1.714	1	0.29	1.516	1	2.4	1.023	1	54	0.089	1
0.0933	1.819	1	0.2933	1.52	1	2.6	0.991	1	56	0.089	1
0.0966	1.602	1	0.2966	1.516	1	2.8	0.959	1	58	0.092	1
0.1	1.465	1	0.3	1.513	1	3	0.93	1	60	0.086	1
0.1033	1.586	1	0.3033	1.513	1	3.2	0.901	1	62	0.086	1
0.1066	1.714	1	0.3066	1.51	1	3.4	0.876	1	64	0.086	1
0.11	1.657	1	0.31	1.51	1	3.6	0.847	1	66	0.086	1
0.1133	1.542	1	0.3133	1.513	1	3.8	0.822	1	68	0.086	1
0.1166	1.548	1	0.3166	1.507	1	4	0.8	1	70	0.086	1
0.12	1.634	1	0.32	1.504	1	4.2	0.777	1	72	0.086	1
0.1233	1.647	1	0.3233	1.507	1	4.4	0.755	1	74	0.086	1
0.1266	1.577	1	0.3266	1.507	1	4.6	0.733	1	76	0.082	1
0.13	1.564	1	0.33	1.504	1	4.8	0.717	1			
0.1333	1.606	1	0.3333	1.501	1	5	0.694	1			
0.1366	1.612	1	0.35	1.494	1	5.2	0.675	1			
0.14	1.586	1	0.3666	1.488	1	5.4	0.656	1			
0.1433	1.564	1	0.3833	1.478	1	5.6	0.64	1			
0.1466	1.58	1	0.4	1.475	1	5.8	0.624	1			
0.15	1.596	1	0.4166	1.469	1	6	0.605	1			
0.1533	1.583	1	0.4333	1.462	1	6.2	0.592	1			
0.1566	1.571	1	0.45	1.456	1	6.4	0.573	1			
0.16	1.567	1	0.4666	1.45	1	6.6	0.56	1			
0.1633	1.574	1	0.4833	1.443	1	6.8	0.545	1			
0.1666	1.577	1	0.5	1.44	1	7	0.532	1			
0.17	1.571	1	0.5166	1.437	1	7.2	0.519	1			
0.1733	1.564	1	0.5333	1.43	1	7.4	0.506	1			
0.1766	1.561	1	0.55	1.424	1	7.6	0.494	1			
0.18	1.567	1	0.5666	1.421	1	7.8	0.484	1			
0.1833	1.567	1	0.5833	1.418	1	8	0.471	1			
0.1866	1.561	1	0.6	1.411	1	8.2	0.465	1			
0.19	1.558	1	0.6166	1.408	1	8.4	0.449	1			
0.1933	1.555	1	0.6333	1.402	1	8.6	0.439	1			
0.1966	1.558	1	0.65	1.399	1	8.8	0.43	1			

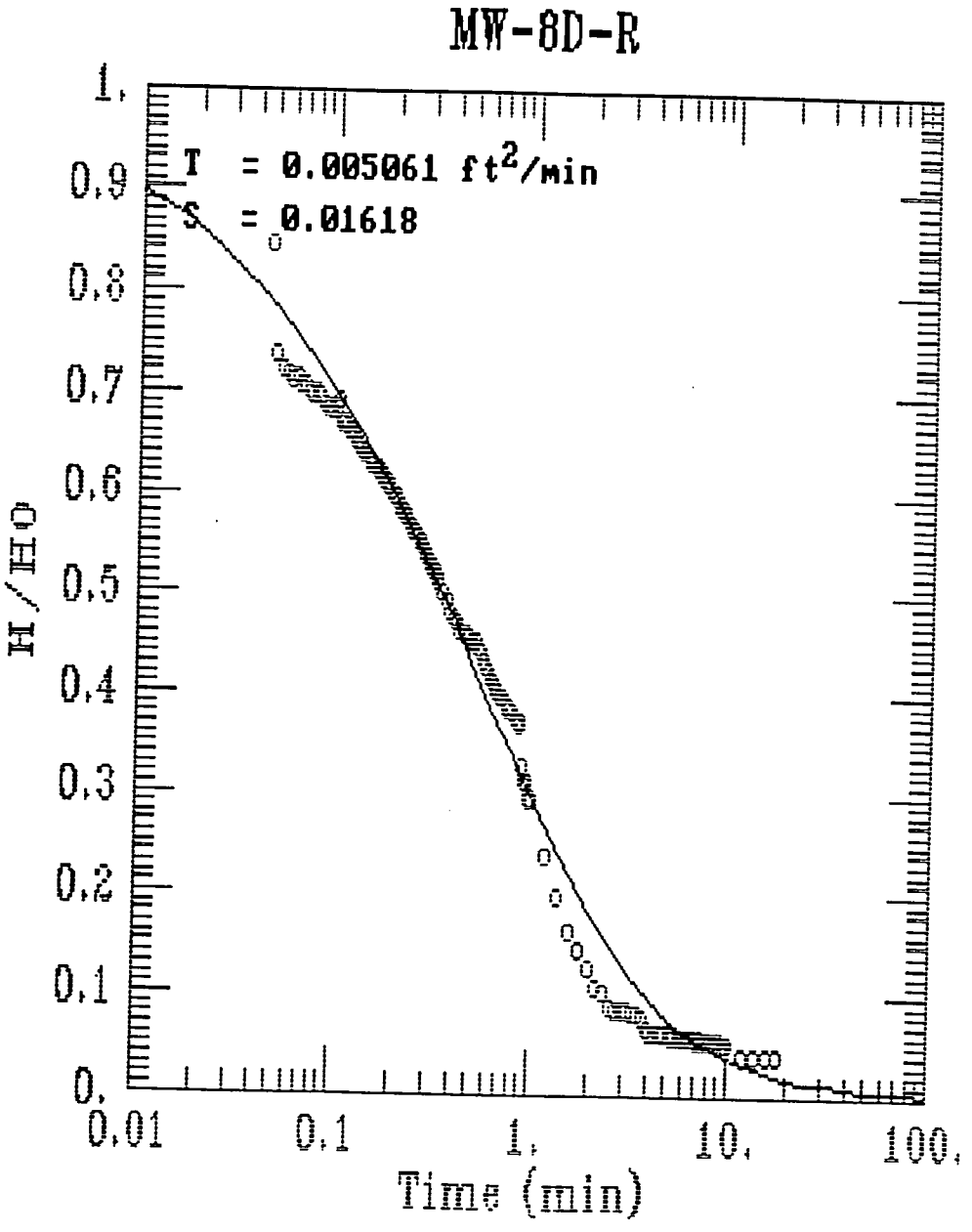
MW-8D-R
T = 0.005061 ft²/min
S = 0.01618
H/H0
1.
0.9
0.8
0.7
0.6
0.5
0.4
0.3
0.2
0.1
0.
0.01
0.1
1.
10.
100.
Time (min)

SE1000C
Environmental Logger
04/27 18:40
MW09-08D-R
Unit# 05001 Test 11
Setups: INPUT 1

Type	Level (F)
Mode	TOC
I.D.	00081
Reference	12.750
Linearity	0.040
Scale factor	10.020
Offset	-0.010
Delay mSEC	50.000

Step 2 04/24 11:52:07
Elapsed Time INPUT 1

0.0000	12.724
0.0033	12.715
0.0066	12.721
0.0100	12.998
0.0133	15.939
0.0166	16.562
0.0200	15.687
0.0233	16.839
0.0266	17.122
0.0300	16.569
0.0333	16.352
0366	14.319
0400	15.067
0.0433	14.809
0.0466	14.701
0.0500	14.456
0.0533	14.421
0.0566	14.405
0.0600	14.389
0.0633	14.396
0.0666	14.386
0.0700	14.383
0.0733	14.367
0.0766	14.357
0.0800	14.364
0.0833	14.354
0.0866	14.338
0.0900	14.335
0.0933	14.335
0.0966	14.319
0.1000	14.332
0.1033	14.351
0.1066	14.294
0.1100	14.297
0.1133	14.287
0.1166	14.278
0.1200	14.275
0.1233	14.268
0.1266	14.256
300	14.246
1333	14.246
0.1366	14.233
0.1400	14.230
0.1433	14.224
0.1466	14.221
0.1500	14.211
0.1533	14.205
0.1566	14.205
0.1600	14.195
0.1633	14.192
0.1666	14.186
0.1700	14.179
0.1733	14.173
0.1766	14.166
0.1800	14.160
0.1833	14.154
0.1866	14.147
0.1900	14.144
0.1933	14.138
0.1966	14.131
0.2000	14.128
0.2033	14.125
0.2066	14.115
0.2100	14.115
0.2133	14.106
0.2166	14.100
0.2200	14.096
0.2233	14.090
0.2266	14.090
0.2300	14.084
0.2333	14.074
0.2366	14.068
0.2400	14.065
0.2433	14.065
0.2466	14.055
0.2500	14.049
0.2533	14.049
0.2566	14.042
0.2600	14.036
0.2633	14.033
0.2666	14.030
0.2700	14.023
0.2733	14.017
0.2766	14.014
0.2800	14.010
0.2833	14.004
0.2866	13.995
0.2900	13.991
0.2933	13.985
0.2966	13.985
0.3000	13.979
0.3033	13.975
0.3066	13.969
0.3100	13.963
0.3133	13.959
0.3166	13.956
0.3200	13.950
0.3233	13.950
0.3266	13.944
0.3300	13.934
0.3333	13.934
0.3500	13.909
0.3666	13.889
0.3833	13.867
0.4000	13.848
0.4166	13.835
0.4333	13.823
0.4500	13.813
0.4666	13.810
0.4833	13.800
0.5000	13.797
0.5166	13.791
0.5333	13.778
0.5500	13.769
0.5666	13.753
0.5833	13.737
0.6000	13.724
0.6166	13.711
0.6333	13.698
0.6500	13.689
0.6666	13.683
0.6833	13.676
0.7000	13.667
0.7166	13.660
0.7333	13.654
0.7500	13.648
0.7666	13.641
0.7833	13.635
0.8000	13.632
0.8166	13.625
0.8333	13.619
0.8500	13.616
0.8666	13.609
0.8833	13.603
0.9000	13.507
0.9166	13.507
0.9333	13.469
0.9500	13.469
0.9666	13.466
0.9833	13.434
1.0000	13.431
1.2000	13.297
1.4000	13.208
1.6000	13.129
1.8000	13.081
2.0000	13.043
2.2000	12.995
2.4000	12.992
2.6000	12.953
2.8000	12.947
3.0000	12.944
3.2000	12.941
3.4000	12.937
3.6000	12.934
3.8000	12.931
4.0000	12.899
4.2000	12.896
4.4000	12.893
4.6000	12.896
4.8000	12.890
5.0000	12.890
5.2000	12.890
5.4000	12.887
5.6000	12.887
5.8000	12.887
6.0000	12.887
6.2000	12.883
6.4000	12.883
6.6000	12.880
6.8000	12.880
7.0000	12.880
7.2000	12.877
7.4000	12.880
7.6000	12.877
7.8000	12.877
8.0000	12.874
8.2000	12.874
8.4000	12.877
8.6000	12.874
8.8000	12.874
9.0000	12.874
9.2000	12.874
9.4000	12.874
9.6000	12.871
9.8000	12.871
10.0000	12.871
12.0000	12.839
14.0000	12.842
16.0000	12.839
18.0000	12.839

DATA USED IN AQTEESOLV MW09-08D-R

0	-0.026	0	0.2	1.378	1	0.6833	0.926	1
0.0033	-0.035	0	0.2033	1.375	1	0.7	0.917	1
0.0066	-0.029	0	0.2066	1.365	1	0.7166	0.91	1
0.01	0.248	1	0.21	1.365	1	0.7333	0.904	1
0.0133	3.189	1	0.2133	1.356	1	0.75	0.898	1
0.0166	3.812	1	0.2166	1.35	1	0.7666	0.891	1
0.02	2.937	1	0.22	1.346	1	0.7833	0.885	1
0.0233	4.089	1	0.2233	1.34	1	0.8	0.882	1
0.0266	4.372	1	0.2266	1.34	1	0.8166	0.875	1
0.03	3.819	1	0.23	1.334	1	0.8333	0.869	1
0.0333	3.602	1	0.2333	1.324	1	0.85	0.866	1
0.0366	1.569	1	0.2366	1.318	1	0.8666	0.859	1
0.04	2.317	1	0.24	1.315	1	0.8833	0.853	1
0.0433	2.059	1	0.2433	1.315	1	0.9	0.757	1
0.0466	1.951	1	0.2466	1.305	1	0.9166	0.757	1
0.05	1.706	1	0.25	1.299	1	0.9333	0.719	1
0.0533	1.671	1	0.2533	1.299	1	0.95	0.719	1
0.0566	1.655	1	0.2566	1.292	1	0.9666	0.716	1
0.06	1.639	1	0.26	1.286	1	0.9833	0.684	1
0.0633	1.646	1	0.2633	1.283	1	1	0.681	1
0.0666	1.636	1	0.2666	1.28	1	1.2	0.547	1
0.07	1.633	1	0.27	1.273	1	1.4	0.458	1
0.0733	1.617	1	0.2733	1.267	1	1.6	0.379	1
0.0766	1.607	1	0.2766	1.264	1	1.8	0.331	1
0.08	1.614	1	0.28	1.26	1	2	0.293	1
0.0833	1.604	1	0.2833	1.254	1	2.2	0.245	1
0.0866	1.588	1	0.2866	1.245	1	2.4	0.242	1
0.09	1.585	1	0.29	1.241	1	2.6	0.203	1
0.0933	1.585	1	0.2933	1.235	1	2.8	0.197	1
0.0966	1.569	1	0.2966	1.235	1	3	0.194	1
0.1	1.582	1	0.3	1.229	1	3.2	0.191	1
0.1033	1.601	1	0.3033	1.225	1	3.4	0.187	1
0.1066	1.544	1	0.3066	1.219	1	3.6	0.184	1
0.11	1.547	1	0.31	1.213	1	3.8	0.181	1
0.1133	1.537	1	0.3133	1.209	1	4	0.149	1
0.1166	1.528	1	0.3166	1.206	1	4.2	0.146	1
0.12	1.525	1	0.32	1.2	1	4.4	0.143	1
0.1233	1.518	1	0.3233	1.2	1	4.6	0.146	1
0.1266	1.506	1	0.3266	1.194	1	4.8	0.14	1
0.13	1.496	1	0.33	1.184	1	5	0.14	1
0.1333	1.496	1	0.3333	1.184	1	5.2	0.14	1
0.1366	1.483	1	0.35	1.159	1	5.4	0.137	1
0.14	1.48	1	0.3666	1.139	1	5.6	0.137	1
0.1433	1.474	1	0.3833	1.117	1	5.8	0.137	1
0.1466	1.471	1	0.4	1.098	1	6	0.137	1
0.15	1.461	1	0.4166	1.085	1	6.2	0.133	1
0.1533	1.455	1	0.4333	1.073	1	6.4	0.133	1
0.1566	1.455	1	0.45	1.063	1	6.6	0.13	1
0.16	1.445	1	0.4666	1.06	1	6.8	0.13	1
0.1633	1.442	1	0.4833	1.05	1	7	0.13	1
0.1666	1.436	1	0.5	1.047	1	7.2	0.127	1
0.17	1.429	1	0.5166	1.041	1	7.4	0.13	1
0.1733	1.423	1	0.5333	1.028	1	7.6	0.127	1
0.1766	1.416	1	0.55	1.019	1	7.8	0.127	1
0.18	1.41	1	0.5666	1.003	1	8	0.124	1
0.1833	1.404	1	0.5833	0.987	1	8.2	0.124	1
0.1866	1.397	1	0.6	0.974	1	8.4	0.127	1
0.19	1.394	1	0.6166	0.961	1	8.6	0.124	1
0.1933	1.388	1	0.6333	0.948	1	8.8	0.124	1
0.1966	1.381	1	0.65	0.939	1	9	0.124	1
			0.6666	0.933	1	9.2	0.124	1
						9.4	0.124	1
						9.6	0.121	1
						9.8	0.121	1
						10	0.121	1
						12	0.089	1
						14	0.092	1
						16	0.089	1
						18	0.089	1

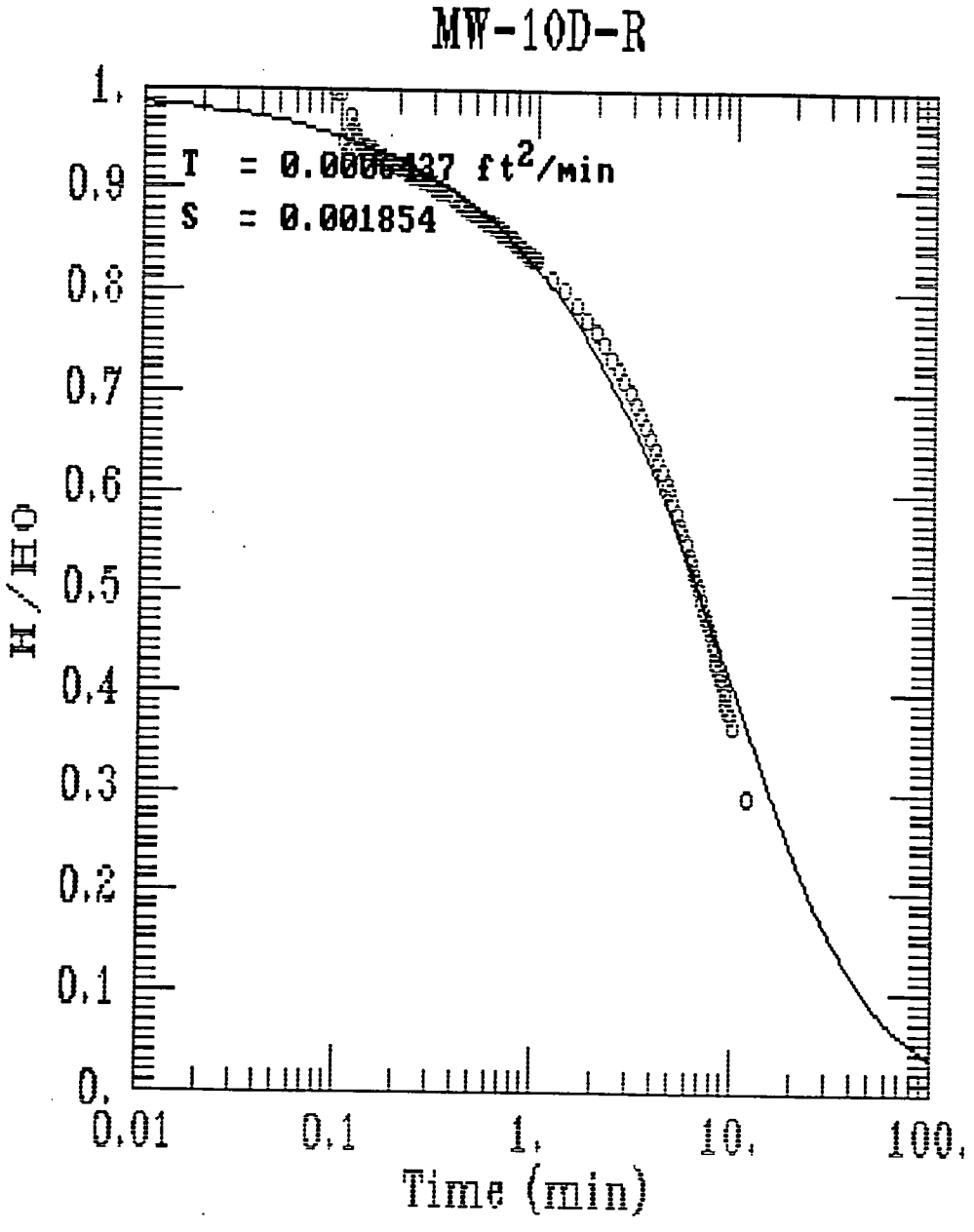
MW-10D-R
T = 0.000437 ft²/min
S = 0.001854
H/H0
Time (min)
1.
0.9
0.8
0.7
0.6
0.5
0.4
0.3
0.2
0.1
0.
0.01
0.1
1.
10.
100.

SE1000C
Environmental Logger
04/27 18:49
MW09-10D-R
Unit# 05001 Test 12
Setups: INPUT 1

Type	Level (F)
Mode	TOC
I.D.	00101
Reference	18.300
Linearity	0.040
Scale factor	10.020
Offset	-0.010
Delay mSEC	50.000

Step 2 04/24 12:56:41
Elapsed Time INPUT 1
L>>>>>>>>>>>**L>>>>>>>>

0.0000	18.079
0.0033	18.079
0.0066	18.079
0.0100	17.760
0.0133	23.115
0.0166	22.949
0.0200	23.370
0.0233	23.921
0.0266	22.934
0.0300	23.443
0.0333	22.809
0.0366	22.758
0.0400	21.735
0.0433	23.106
0.0466	21.365
0.0500	21.633
0.0533	19.257
0.0566	19.825
0.0600	19.554
0.0633	19.815
0.0666	19.933
0.0700	20.102
0.0733	20.042
0.0766	19.949
0.0800	19.837
0.0833	19.809
0.0866	19.796
0.0900	19.908
0.0933	19.930
0.0966	19.920
0.1000	19.924
0.1033	19.841
0.1066	19.828
0.1100	19.857
0.1133	19.885
0.1166	19.866
0.1200	19.857
0.1233	19.841
0.1266	19.837
0.1300	19.828
0.1333	19.837
0.1366	19.837
0.1400	19.834
0.1433	19.828
0.1466	19.834
0.1500	19.825
0.1533	19.825
0.1566	19.822
0.1600	19.822
0.1633	19.818
0.1666	19.818
0.1700	19.815
0.1733	19.809
0.1766	19.812
0.1800	19.812
0.1833	19.812
0.1866	19.809
0.1900	19.806
0.1933	19.806
0.1966	19.806
0.2000	19.802
0.2033	19.802
0.2066	19.802
0.2100	19.799
0.2133	19.799
0.2166	19.799
0.2200	19.796
0.2233	19.796
0.2266	19.796
0.2300	19.793
0.2333	19.793
0.2366	19.790
0.2400	19.790
0.2433	19.790
0.2466	19.790
0.2500	19.786
0.2533	19.786
0.2566	19.786
0.2600	19.783
0.2633	19.783
0.2666	19.783
0.2700	19.783
0.2733	19.780
0.2766	19.780
0.2800	19.780
0.2833	19.777
0.2866	19.777
0.2900	19.777
0.2933	19.777
0.2966	19.774
0.3000	19.774
0.3033	19.774
0.3066	19.771
0.3100	19.771
0.3133	19.771
0.3166	19.771
0.3200	19.767
0.3233	19.767
0.3266	19.767
0.3300	19.764
0.3333	19.764
0.3500	19.761
0.3666	19.758
0.3833	19.751
0.4000	19.748
0.4166	19.745
0.4333	19.742
0.4500	19.735
0.4666	19.732
0.4833	19.729
0.5000	19.726
0.5166	19.723
0.5333	19.719
0.5500	19.716
0.5666	19.713
0.5833	19.713
0.6000	19.710
0.6166	19.707
0.6333	19.704
0.6500	19.700
0.6666	19.697
0.6833	19.697
0.7000	19.694
0.7166	19.691
0.7333	19.688
0.7500	19.688
0.7666	19.684
0.7833	19.681
0.8000	19.678
0.8166	19.678
0.8333	19.675
0.8500	19.672
0.8666	19.668
0.8833	19.668
0.9000	19.665
0.9166	19.662
0.9333	19.662
0.9500	19.659
0.9666	19.656
0.9833	19.656
1.0000	19.653
1.2000	19.624
1.4000	19.602
1.6000	19.579
1.8000	19.557
2.0000	19.538
2.2000	19.519
2.4000	19.496
2.6000	19.477
2.8000	19.458
3.0000	19.439
3.2000	19.420
3.4000	19.404
3.6000	19.384
3.8000	19.365
4.0000	19.349
4.2000	19.330
4.4000	19.314
4.6000	19.295
4.8000	19.279
5.0000	19.263
5.2000	19.244
5.4000	19.228
5.6000	19.212
5.8000	19.196
6.0000	19.180
6.2000	19.164
6.4000	19.148
6.6000	19.136
6.8000	19.120
7.0000	19.104
7.2000	19.088
7.4000	19.075
7.6000	19.059
7.8000	19.046
8.0000	19.030
8.2000	19.018
8.4000	19.002
8.6000	18.989
8.8000	18.976
9.0000	18.963
9.2000	18.951
9.4000	18.935
9.6000	18.922
9.8000	18.912
10.0000	18.896
12.0000	18.778

DATA USED IN AQTESOLV MW09-10D-R

0.0133	4.815	1	0.2133	1.499	1	0.7333	1.388	1
0.0166	4.649	1	0.2166	1.499	1	0.75	1.388	1
0.02	5.07	1	0.22	1.496	1	0.7666	1.384	1
0.0233	5.621	1	0.2233	1.496	1	0.7833	1.381	1
0.0266	4.634	1	0.2266	1.496	1	0.8	1.378	1
0.03	5.143	1	0.23	1.493	1	0.8166	1.378	1
0.0333	4.509	1	0.2333	1.493	1	0.8333	1.375	1
0.0366	4.458	1	0.2366	1.49	1	0.85	1.372	1
0.04	3.435	1	0.24	1.49	1	0.8666	1.368	1
0.0433	4.806	1	0.2433	1.49	1	0.8833	1.368	1
0.0466	3.065	1	0.2466	1.49	1	0.9	1.365	1
0.05	3.333	1	0.25	1.486	1	0.9166	1.362	1
0.0533	0.957	1	0.2533	1.486	1	0.9333	1.362	1
0.0566	1.525	1	0.2566	1.486	1	0.95	1.359	1
0.06	1.254	1	0.26	1.483	1	0.9666	1.356	1
0.0633	1.515	1	0.2633	1.483	1	0.9833	1.356	1
0.0666	1.633	1	0.2666	1.483	1	1	1.353	1
0.07	1.802	1	0.27	1.483	1	1.2	1.324	1
0.0733	1.742	1	0.2733	1.48	1	1.4	1.302	1
0.0766	1.649	1	0.2766	1.48	1	1.6	1.279	1
0.08	1.537	1	0.28	1.48	1	1.8	1.257	1
0.0833	1.509	1	0.2833	1.477	1	2	1.238	1
0.0866	1.496	1	0.2866	1.477	1	2.2	1.219	1
0.09	1.608	1	0.29	1.477	1	2.4	1.196	1
0.0933	1.63	1	0.2933	1.477	1	2.6	1.177	1
0.0966	1.62	1	0.2966	1.474	1	2.8	1.158	1
0.1	1.624	1	0.3	1.474	1	3	1.139	1
0.1033	1.541	1	0.3033	1.474	1	3.2	1.12	1
0.1066	1.528	1	0.3066	1.471	1	3.4	1.104	1
0.11	1.557	1	0.31	1.471	1	3.6	1.084	1
0.1133	1.585	1	0.3133	1.471	1	3.8	1.065	1
0.1166	1.566	1	0.3166	1.471	1	4	1.049	1
0.12	1.557	1	0.32	1.467	1	4.2	1.03	1
0.1233	1.541	1	0.3233	1.467	1	4.4	1.014	1
0.1266	1.537	1	0.3266	1.467	1	4.6	0.995	1
0.13	1.528	1	0.33	1.464	1	4.8	0.979	1
0.1333	1.537	1	0.3333	1.464	1	5	0.963	1
0.1366	1.537	1	0.35	1.461	1	5.2	0.944	1
0.14	1.534	1	0.3666	1.458	1	5.4	0.928	1
0.1433	1.528	1	0.3833	1.451	1	5.6	0.912	1
0.1466	1.534	1	0.4	1.448	1	5.8	0.896	1
0.15	1.525	1	0.4166	1.445	1	6	0.88	1
0.1533	1.525	1	0.4333	1.442	1	6.2	0.864	1
0.1566	1.522	1	0.45	1.435	1	6.4	0.848	1
0.16	1.522	1	0.4666	1.432	1	6.6	0.836	1
0.1633	1.518	1	0.4833	1.429	1	6.8	0.82	1
0.1666	1.518	1	0.5	1.426	1	7	0.804	1
0.17	1.515	1	0.5166	1.423	1	7.2	0.788	1
0.1733	1.509	1	0.5333	1.419	1	7.4	0.775	1
0.1766	1.512	1	0.55	1.416	1	7.6	0.759	1
0.18	1.512	1	0.5666	1.413	1	7.8	0.746	1
0.1833	1.512	1	0.5833	1.413	1	8	0.73	1
0.1866	1.509	1	0.6	1.41	1	8.2	0.718	1
0.19	1.506	1	0.6166	1.407	1	8.4	0.702	1
0.1933	1.506	1	0.6333	1.404	1	8.6	0.689	1
0.1966	1.506	1	0.65	1.4	1	8.8	0.676	1
0.2	1.502	1	0.6666	1.397	1	9	0.663	1
0.2033	1.502	1	0.6833	1.397	1	9.2	0.651	1
0.2066	1.502	1	0.7	1.394	1	9.4	0.635	1
0.21	1.499	1	0.7166	1.391	1	9.6	0.622	1
						9.8	0.612	1
						10	0.596	1
						12	0.478	1

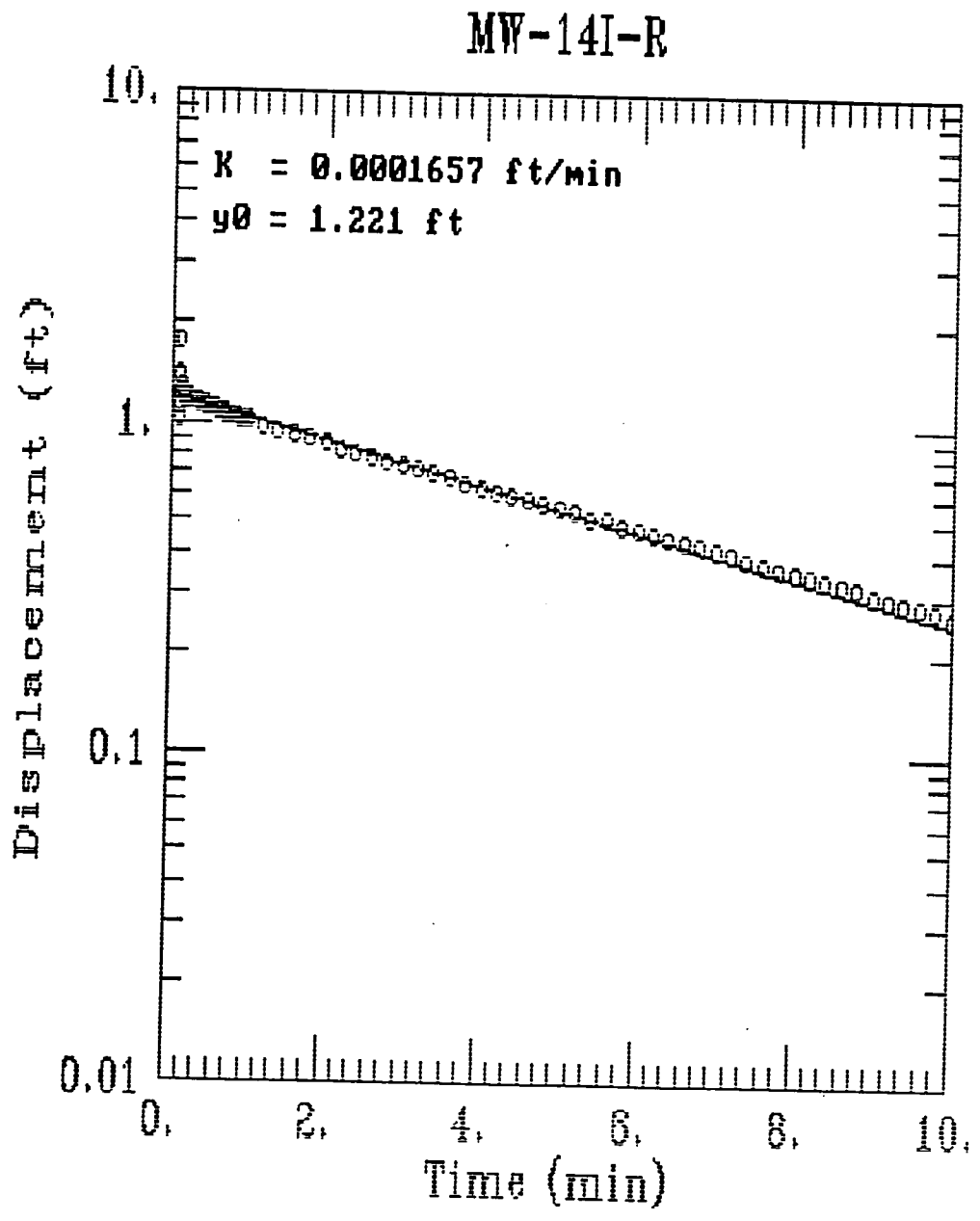
MW-14I-R
K = 0.0001657 ft/min
y0 = 1.221 ft
10.
1.
0.1
0.01
Displacement (ft)
0.
2.
4.
6.
8.
10.
Time (min)

SE1000C
Environmental Logger
04/26 18:43
MW09-14I-R
Unit# 05001 Test 4
Setups: INPUT 1

Type Level (F)
Mode TOC
I.D. 00143
Reference 14.510
Linearity 0.040
Scale factor 10.020
Offset -0.010
Delay mSEC 50.000
Step 2 04/21 10:28:35
Elapsed Time INPUT 1

0	14.05
0.0033	14.04
0.0066	14.011
0.01	14.324
0.0133	15.266
0.0166	17.069
0.02	18.766
0.0233	18.868
0.0266	16.849
0.03	15.675
0.0333	16.61
0.0366	18.642
0.04	19.349
0.0433	16.811
0.0466	13.184
0.05	12.964
0.0533	14.918
0.0566	16.422
0.06	15.882
0.0633	14.749
0.0666	14.28
0.07	14.992
0.0733	15.47
0.0766	15.388
0.08	14.976
0.0833	14.784
0.0866	14.963
0.09	15.202
0.0933	15.563
0.0966	15.962
0.1	16.243
0.1033	15.905
0.1066	15.525
0.11	15.598
0.1133	15.866
0.1166	15.901
0.12	15.729
0.1233	15.64
0.1266	15.719
0.13	15.806
0.1333	15.78
0.1366	15.707
0.14	15.694
0.1433	15.735
0.1466	15.758
0.15	15.732
0.1533	15.703
0.1566	15.71
0.16	15.726
0.1633	15.726
0.1666	15.703
0.17	15.684
0.1733	15.694
0.1766	15.694
0.18	15.691
0.1833	15.681
0.1866	15.678
0.19	15.694
0.1933	15.697
0.1966	15.707
0.2	15.707
0.2033	15.7
0.2066	15.697
0.21	15.697
0.2133	15.7
0.2166	15.694
0.22	15.694
0.2233	15.694
0.2266	15.697
0.23	15.697
0.2333	15.688
0.2366	15.681
0.24	15.684
0.2433	15.688
0.2466	15.688
0.25	15.684
0.2533	15.681
0.2566	15.681
0.26	15.681
0.2633	15.681
0.2666	15.678
0.27	15.678
0.2733	15.675
0.2766	15.675
0.28	15.675
0.2833	15.678
0.2866	15.675
0.29	15.672
0.2933	15.675
0.2966	15.672
0.3	15.668
0.3033	15.672
0.3066	15.672
0.31	15.668
0.3133	15.665
0.3166	15.665
0.32	15.665
0.3233	15.665
0.3266	15.665
0.33	15.659
0.3333	15.662
0.35	15.656
0.3666	15.649
0.3833	15.643
0.4	15.64
0.4166	15.633
0.4333	15.63
0.45	15.627
0.4666	15.624
0.4833	15.621
0.5	15.617
0.5166	15.611
0.5333	15.608
0.55	15.605
0.5666	15.601
0.5833	15.598
0.6	15.595
0.6166	15.592
0.6333	15.585
0.65	15.585
0.6666	15.579
0.6833	15.579
0.7	15.573
0.7166	15.569
0.7333	15.569
0.75	15.566
0.7666	15.563
0.7833	15.56
0.8	15.557
0.8166	15.553
0.8333	15.55
0.85	15.547
0.8666	15.544
0.8833	15.541
0.9	15.537
0.9166	15.534
0.9333	15.534
0.95	15.531
0.9666	15.528
0.9833	15.525
1	15.522
1.2	15.483
1.4	15.455
1.6	15.426
1.8	15.397
2	15.372
2.2	15.346
2.4	15.324
2.6	15.298
2.8	15.276
3	15.253
3.2	15.234
3.4	15.212
3.6	15.193
3.8	15.174
4	15.154
4.2	15.139
4.4	15.119
4.6	15.1
4.8	15.084
5	15.068
5.2	15.052
5.4	15.036
5.6	15.024
5.8	15.008
6	14.995
6.2	14.979
6.4	14.969
6.6	14.957
6.8	14.941
7	14.931
7.2	14.918
7.4	14.905
7.6	14.893
7.8	14.883
8	14.874
8.2	14.861
8.4	14.854
8.6	14.842
8.8	14.832
9	14.823
9.2	14.813
9.4	14.807
9.6	14.797
9.8	14.787
10	14.778

DATA USED IN AQTESOLV MW09-14I-R

0.0133	0.756	1	0.22	1.184	1	0.8	1.047	1
0.0166	2.559	1	0.2233	1.184	1	0.8166	1.043	1
0.02	4.256	1	0.2266	1.187	1	0.8333	1.04	1
0.0233	4.358	1	0.23	1.187	1	0.85	1.037	1
0.0266	2.339	1	0.2333	1.178	1	0.8666	1.034	1
0.03	1.165	1	0.2366	1.171	1	0.8833	1.031	1
0.0333	2.1	1	0.24	1.174	1	0.9	1.027	1
0.0366	4.132	1	0.2433	1.178	1	0.9166	1.024	1
0.04	4.839	1	0.2466	1.178	1	0.9333	1.024	1
0.0433	2.301	1	0.25	1.174	1	0.95	1.021	1
0.0466	-1.326	1	0.2533	1.171	1	0.9666	1.018	1
0.05	-1.546	1	0.2566	1.171	1	0.9833	1.015	1
0.0533	0.408	1	0.26	1.171	1	1	1.012	1
0.0566	1.912	1	0.2633	1.171	1	1.2	0.973	1
0.06	1.372	1	0.2666	1.168	1	1.4	0.945	1
0.0633	0.239	1	0.27	1.168	1	1.6	0.916	1
0.0666	-0.23	1	0.2733	1.165	1	1.8	0.887	1
0.07	0.482	1	0.2766	1.165	1	2	0.862	1
0.0733	0.96	1	0.28	1.165	1	2.2	0.836	1
0.0766	0.878	1	0.2833	1.168	1	2.4	0.814	1
0.08	0.466	1	0.2866	1.165	1	2.6	0.788	1
0.0833	0.274	1	0.29	1.162	1	2.8	0.766	1
0.0866	0.453	1	0.2933	1.165	1	3	0.743	1
0.09	0.692	1	0.2966	1.162	1	3.2	0.724	1
0.0933	1.053	1	0.3	1.158	1	3.4	0.702	1
0.0966	1.452	1	0.3033	1.162	1	3.6	0.683	1
0.1	1.733	1	0.3066	1.162	1	3.8	0.664	1
0.1033	1.395	1	0.31	1.158	1	4	0.644	1
0.1066	1.015	1	0.3133	1.155	1	4.2	0.629	1
0.11	1.088	1	0.3166	1.155	1	4.4	0.609	1
0.1133	1.356	1	0.32	1.155	1	4.6	0.59	1
0.1166	1.391	1	0.3233	1.155	1	4.8	0.574	1
0.12	1.219	1	0.3266	1.155	1	5	0.558	1
0.1233	1.13	1	0.33	1.149	1	5.2	0.542	1
0.1266	1.209	1	0.3333	1.152	1	5.4	0.526	1
0.13	1.296	1	0.35	1.146	1	5.6	0.514	1
0.1333	1.27	1	0.3666	1.139	1	5.8	0.498	1
0.1366	1.197	1	0.3833	1.133	1	6	0.485	1
0.14	1.184	1	0.4	1.13	1	6.2	0.469	1
0.1433	1.225	1	0.4166	1.123	1	6.4	0.459	1
0.1466	1.248	1	0.4333	1.12	1	6.6	0.447	1
0.15	1.222	1	0.45	1.117	1	6.8	0.431	1
0.1533	1.193	1	0.4666	1.114	1	7	0.421	1
0.1566	1.2	1	0.4833	1.111	1	7.2	0.408	1
0.16	1.216	1	0.5	1.107	1	7.4	0.395	1
0.1633	1.216	1	0.5166	1.101	1	7.6	0.383	1
0.1666	1.193	1	0.5333	1.098	1	7.8	0.373	1
0.17	1.174	1	0.55	1.095	1	8	0.364	1
0.1733	1.184	1	0.5666	1.091	1	8.2	0.351	1
0.1766	1.184	1	0.5833	1.088	1	8.4	0.344	1
0.18	1.181	1	0.6	1.085	1	8.6	0.332	1
0.1833	1.171	1	0.6166	1.082	1	8.8	0.322	1
0.1866	1.168	1	0.6333	1.075	1	9	0.313	1
0.19	1.184	1	0.65	1.075	1	9.2	0.303	1
0.1933	1.187	1	0.6666	1.069	1	9.4	0.297	1
0.1966	1.197	1	0.6833	1.069	1	9.6	0.287	1
0.2	1.197	1	0.7	1.063	1	9.8	0.277	1
0.2033	1.19	1	0.7166	1.059	1	10	0.268	1
0.2066	1.187	1	0.7333	1.059	1			
0.21	1.187	1	0.75	1.056	1			
0.2133	1.19	1	0.7666	1.053	1			
0.2166	1.184	1	0.7833	1.05	1			

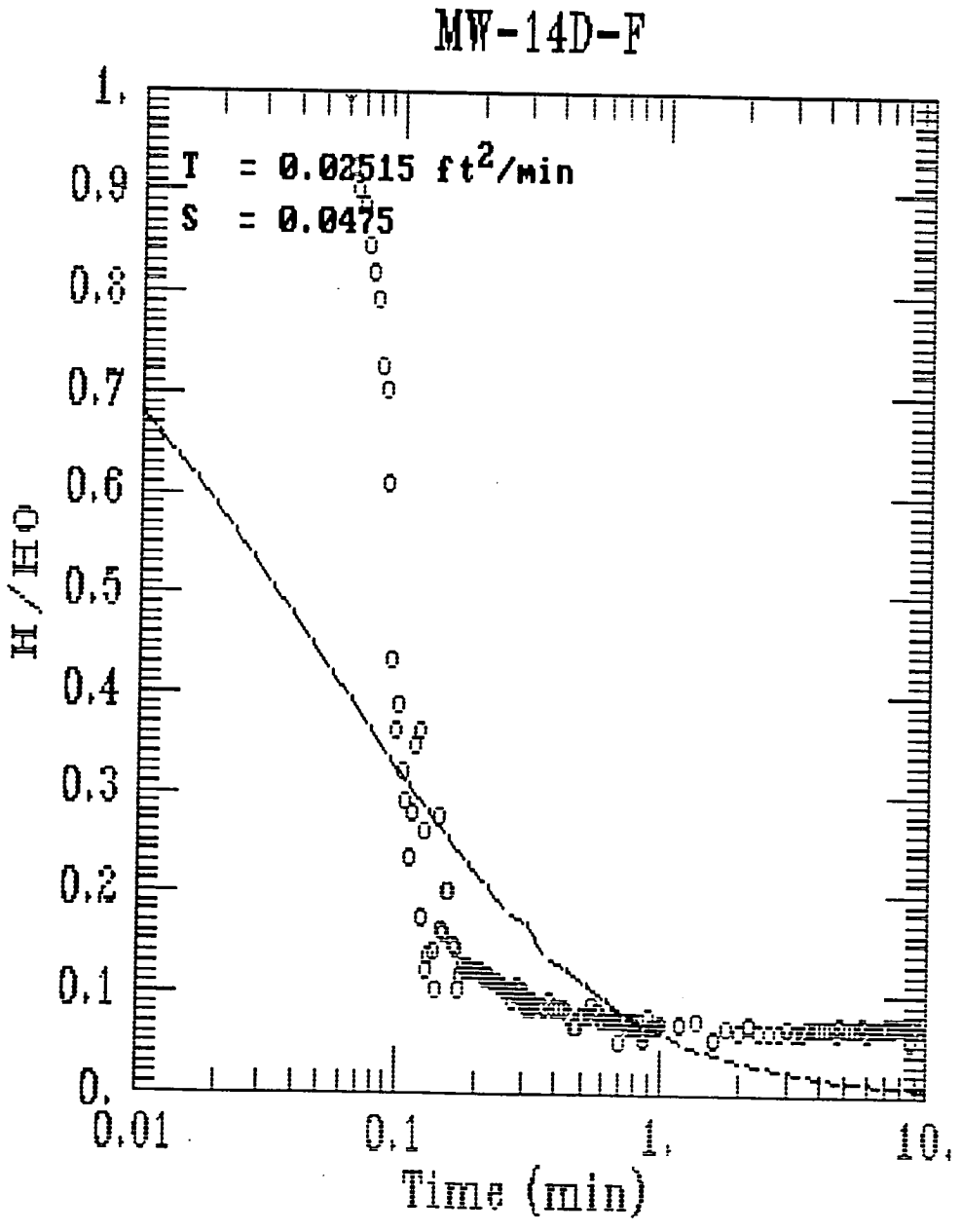
MW-14D-F
T = 0.02515 ft²/min
S = 0.0475
H/H0
Time (min)
1.
0.9
0.8
0.7
0.6
0.5
0.4
0.3
0.2
0.1
0.
0.01
0.1
1.
10.

SE1000C
Environmental Logger
:5/01 17:48
MW09-14D-F
Unit# 05014 Test 2
INPUT 1: Level (F) TOC
Reference 17.860
Linearity 0.040
Scale factor 10.020
Offset -0.010
Delay mSEC 50.000
Step 1 04/21 10:38:16
Elapsed Time INPUT 1

0.0000	17.777
0.0033	17.777
0.0066	17.780
0.0100	17.774
0.0133	17.777
0.0166	17.774
0.0200	17.764
0.0233	17.761
0.0266	17.767
0.0300	17.754
0.0333	16.058
0.0366	17.238
0.0400	15.563
0.0433	16.425
0.0466	16.157
0.0500	16.361
0533	15.895
.0566	16.609
0.0600	16.383
0.0633	16.492
0.0666	16.527
0.0700	16.552
0.0733	16.609
0.0766	16.651
0.0800	16.686
0.0833	16.788
0.0866	16.820
0.0900	16.960
0.0933	17.219
0.0966	17.327
0.1000	17.289
0.1033	17.388
0.1066	17.432
0.1100	17.512
0.1133	17.445
0.1166	17.349
0.1200	17.327
0.1233	17.601
0.1266	17.477
0.1300	17.678
0.1333	17.659
0.1366	17.652
0.1400	17.707
0.1433	17.451
166	17.620
500	17.624
0.1533	17.566
0.1566	17.566
0.1600	17.904
0.1633	17.640
0.1666	17.649
0.1700	17.710
0.1733	17.684
0.1766	17.672
0.1800	17.675
0.1833	17.678
0.1866	17.675
0.1900	17.678
0.1933	17.678
0.1966	17.678
0.2000	17.678
0.2033	17.678
0.2066	17.681
0.2100	17.684
0.2133	17.684
0.2166	17.691
0.2200	17.684
0.2233	17.687
0.2266	17.691
0.2300	17.694
0.2333	17.694
0.2366	17.697
0.2400	17.697
0.2433	17.697
0.2466	17.703
0.2500	17.703
0.2533	17.703
0.2566	17.707
0.2600	17.710
0.2633	17.707
0.2666	17.710
0.2700	17.710
0.2733	17.710
0.2766	17.723
0.2800	17.713
0.2833	17.713
0.2866	17.707
0.2900	17.703
0.2933	17.707
0.2966	17.707
0.3000	17.710
0.3033	17.729
0.3066	17.719
0.3100	17.723
0.3133	17.735
0.3166	17.729
0.3200	17.735
0.3233	17.726
0.3266	17.735
0.3300	17.732
0.3333	17.732
0.3500	17.732
0.3666	17.738
0.3833	17.726
0.4000	17.735
0.4166	17.738
0.4333	17.738
0.4500	17.745
0.4666	17.761
0.4833	17.764
0.5000	17.745
0.5166	17.745
0.5333	17.748
0.5500	17.732
0.5666	17.742
0.5833	17.742
0.6000	17.754
0.6166	17.754
0.6333	17.754
0.6500	17.751
0.6666	17.748
0.6833	17.751
0.7000	17.783
0.7166	17.751
0.7333	17.751
0.7500	17.761
0.7666	17.751
0.7833	17.754
0.8000	17.761
0.8166	17.761
0.8333	17.751
0.8500	17.767
0.8666	17.777
0.8833	17.770
0.9000	17.745
0.9166	17.761
0.9333	17.761
0.9500	17.761
0.9666	17.761
0.9833	17.764
1.0000	17.758
1.2000	17.758
1.4000	17.754
1.6000	17.777
1.8000	17.764
2.0000	17.767
2.2000	17.758
2.4000	17.767
2.6000	17.767
2.8000	17.767
3.0000	17.761
3.2000	17.767
3.4000	17.767
3.6000	17.764
3.8000	17.764
4.0000	17.764
4.2000	17.764
4.4000	17.764
4.6000	17.767
4.8000	17.758
5.0000	17.764
5.2000	17.761
5.4000	17.761
5.6000	17.761
5.8000	17.758
6.0000	17.770
6.2000	17.761
6.4000	17.761
6.6000	17.761
6.8000	17.761
7.0000	17.761
7.2000	17.758
7.4000	17.761
7.6000	17.758
7.8000	17.758
8.0000	17.758
8.2000	17.758
8.4000	17.758
8.6000	17.777
8.8000	17.758
9.0000	17.758
9.2000	17.761
9.4000	17.754
9.6000	17.754
9.8000	17.754
10.0000	17.754

DATA USED IN AQTESOLV MW09-14D-F

0	0.038	1	0.2	1.734	1	0.6666	1.482	1
0.0033	0.035	1	0.2033	1.498	1	0.6833	1.479	1
0.0066	0.038	1	0.2066	1.456	1	0.7	1.475	1
0.01	0.042	1	0.21	1.84	1	0.7166	1.472	1
0.0133	0.038	1	0.2133	1.929	1	0.7333	1.469	1
0.0166	0.038	1	0.2166	1.287	1	0.75	1.466	1
0.02	0.048	1	0.22	1.306	1	0.7666	1.46	1
0.0233	0.051	1	0.2233	1.511	1	0.7833	1.456	1
0.0266	0.051	1	0.2266	1.744	1	0.8	1.453	1
0.03	0.24	1	0.23	1.776	1	0.8166	1.45	1
0.0333	2.166	1	0.2333	1.632	1	0.8333	1.447	1
0.0366	0.006	1	0.2366	1.511	1	0.85	1.444	1
0.04	-0.492	0	0.24	1.511	1	0.8666	1.44	1
0.0433	1.466	1	0.2433	1.59	1	0.8833	1.437	1
0.0466	2.482	1	0.2466	1.651	1	0.9	1.434	1
0.05	1.881	1	0.25	1.635	1	0.9166	1.428	1
0.0533	-0.041	0	0.2533	1.587	1	0.9333	1.428	1
0.0566	1.214	1	0.2566	1.498	1	0.95	1.424	1
0.06	3.214	1	0.26	1.578	1	0.9666	1.418	1
0.0633	2.479	1	0.2633	1.645	1	0.9833	1.418	1
0.0666	1.785	1	0.2666	1.638	1	1	1.415	1
0.07	1.878	1	0.27	1.59	1	1.2	1.37	1
0.0733	2.233	1	0.2733	1.555	1	1.4	1.335	1
0.0766	2.348	1	0.2766	1.562	1	1.6	1.3	1
0.08	2.21	1	0.28	1.587	1	1.8	1.265	1
0.0833	1.789	1	0.2833	1.603	1	2	1.236	1
0.0866	1.626	1	0.2866	1.594	1	2.2	1.204	1
0.09	1.948	1	0.29	1.578	1	2.4	1.175	1
0.0933	2.498	1	0.2933	1.568	1	2.6	1.146	1
0.0966	2.166	1	0.2966	1.575	1	2.8	1.121	1
0.1	1.606	1	0.3	1.581	1	3	1.092	1
0.1033	1.549	1	0.3033	1.581	1	3.2	1.07	1
0.1066	1.878	1	0.3066	1.578	1	3.4	1.044	1
0.11	2.127	1	0.31	1.571	1	3.6	1.019	1
0.1133	2.233	1	0.3133	1.568	1	3.8	0.996	1
0.1166	1.999	1	0.3166	1.571	1	4	0.974	1
0.12	1.718	1	0.32	1.575	1	4.2	0.955	1
0.1233	1.565	1	0.3233	1.571	1	4.4	0.933	1
0.1266	1.795	1	0.3266	1.568	1	4.6	0.91	1
0.13	1.9	1	0.33	1.568	1	4.8	0.891	1
0.1333	1.811	1	0.3333	1.565	1	5	0.872	1
0.1366	1.571	1	0.35	1.565	1	5.2	0.853	1
0.14	1.744	1	0.3666	1.559	1	5.4	0.833	1
0.1433	1.856	1	0.3833	1.555	1	5.6	0.818	1
0.1466	2.041	1	0.4	1.549	1	5.8	0.798	1
0.15	1.622	1	0.4166	1.546	1	6	0.782	1
0.1533	1.265	1	0.4333	1.539	1	6.2	0.766	1
0.1566	1.546	1	0.45	1.536	1	6.4	0.75	1
0.16	2.111	1	0.4666	1.533	1	6.6	0.734	1
0.1633	1.923	1	0.4833	1.527	1	6.8	0.718	1
0.1666	1.741	1	0.5	1.523	1	7	0.706	1
0.17	1.683	1	0.5166	1.52	1	7.2	0.69	1
0.1733	1.543	1	0.5333	1.514	1	7.4	0.677	1
0.1766	1.715	1	0.55	1.511	1	7.6	0.661	1
0.18	1.913	1	0.5666	1.508	1	7.8	0.648	1
0.1833	1.757	1	0.5833	1.504	1	8	0.636	1
0.1866	1.731	1	0.6	1.498	1	8.2	0.623	1
0.19	1.67	1	0.6166	1.495	1	8.4	0.61	1
0.1933	1.501	1	0.6333	1.491	1	8.6	0.597	1
0.1966	1.651	1	0.65	1.485	1	8.8	0.584	1
						9	0.575	1
						9.2	0.562	1
						9.4	0.552	1
						9.6	0.543	1
						9.8	0.53	1
						10	0.521	1

MW-15I- R

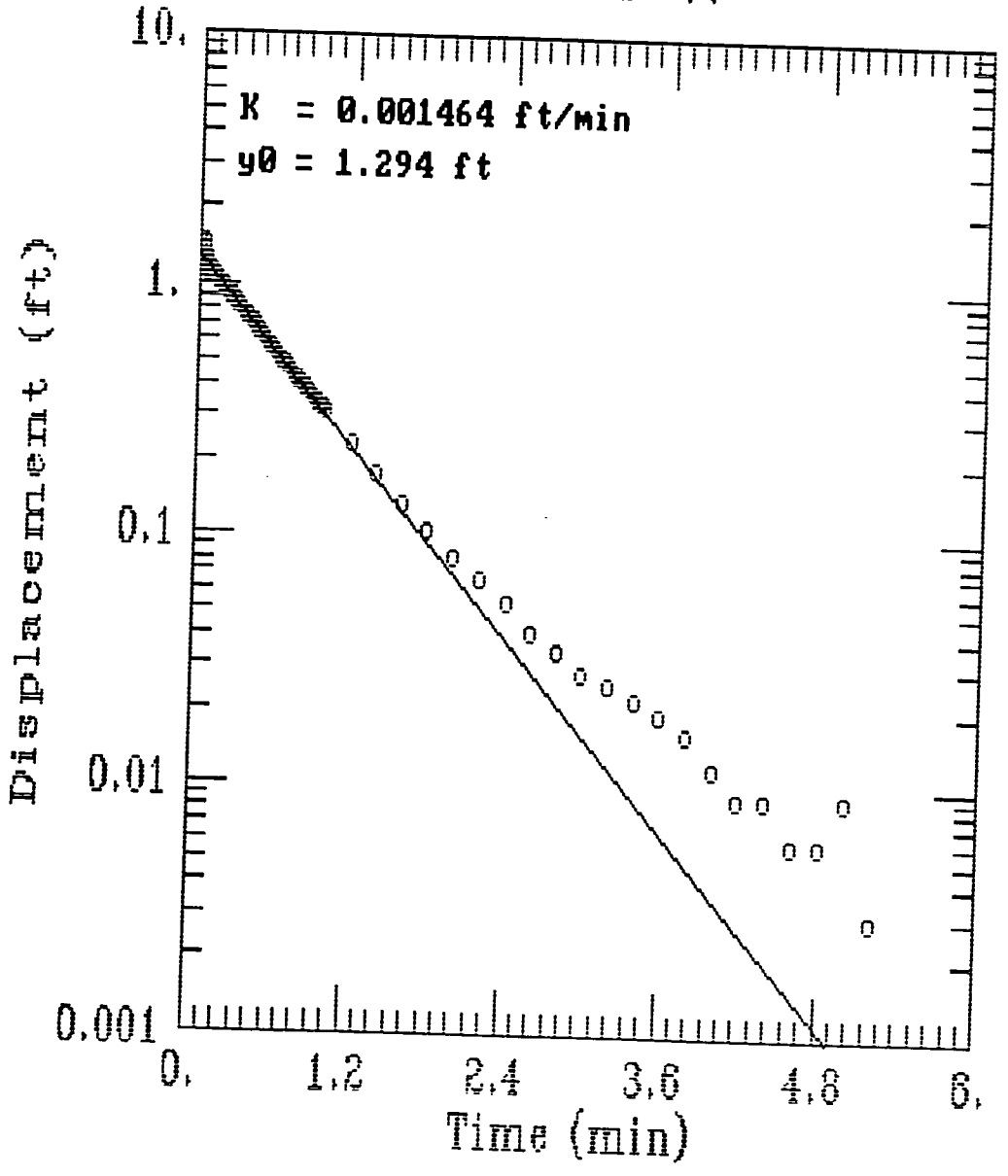
K = 0.001464 ft/min
y0 = 1.294 ft
10.
1.
0.1
0.01
0.001
Displacement (ft)
0.
1.2
2.4
3.6
4.8
6.
Time (min)

SE1000C
Environmental Logger
05/02 08:26
MW09-15I-R
Unit# 05014 Test 3
INPUT 1: Level (F) TOC
Reference 14.910
Linearity 0.040
Scale factor 10.050
Offset -0.060
Delay mSEC 50.000
Step 2 04/21 12:58:47
Elapsed Time INPUT 1

0.0000	14.910
0.0033	14.910
0.0066	14.910
0.0100	15.073
0.0133	16.268
0.0166	17.973
0.0200	18.625
0.0233	16.351
0.0266	14.942
0.0300	14.903
0.0333	16.050
0.0366	17.082
0.0400	16.549
0.0433	15.776
0.0466	15.884
0.0500	16.341
0.0533	16.268
0.0566	15.999
0.0600	16.054
0.0633	16.172
0.0666	16.102
0.0700	16.050
0.0733	16.083
0.0766	16.086
0.0800	16.057
0.0833	16.054
0.0866	16.057
0.0900	16.050
0.0933	16.038
0.0966	16.031
0.1000	16.025
0.1033	16.019
0.1066	16.012
0.1100	16.009
0.1133	15.999
0.1166	15.993
0.1200	15.990
0.1233	15.987
0.1266	15.977
0.1300	15.967
0.1333	15.967
0.1366	15.958
0.1400	15.955
0.1433	15.948
0.1466	15.942
0.1500	15.939
0.1533	15.932
0.1566	15.929
0.1600	15.923
0.1633	15.920
0.1666	15.913
0.1700	15.907
0.1733	15.904
0.1766	15.897
0.1800	15.894
0.1833	15.891
0.1866	15.884
0.1900	15.881
0.1933	15.875
0.1966	15.872
0.2000	15.865
0.2033	15.859
0.2066	15.856
0.2100	15.852
0.2133	15.849
0.2166	15.843
0.2200	15.837
0.2233	15.833
0.2266	15.830
0.2300	15.827
0.2333	15.820
0.2366	15.817
0.2400	15.811
0.2433	15.808
0.2466	15.808
0.2500	15.801
0.2533	15.798
0.2566	15.795
0.2600	15.792
0.2633	15.785
0.2666	15.779
0.2700	15.776
0.2733	15.769
0.2766	15.769
0.2800	15.763
0.2833	15.760
0.2866	15.757
0.2900	15.750
0.2933	15.750
0.2966	15.747
0.3000	15.744
0.3033	15.737
0.3066	15.731
0.3100	15.734
0.3133	15.725
0.3166	15.725
0.3200	15.718
0.3233	15.715
0.3266	15.712
0.3300	15.709
0.3333	15.705
0.3500	15.683
0.3666	15.664
0.3833	15.648
0.4000	15.629
0.4166	15.613
0.4333	15.597
0.4500	15.578
0.4666	15.565
0.4833	15.549
0.5000	15.530
0.5166	15.517
0.5333	15.501
0.5500	15.485
0.5666	15.472
0.5833	15.459
0.6000	15.447
0.6166	15.434
0.6333	15.424
0.6500	15.411
0.6666	15.399
0.6833	15.389
0.7000	15.379
0.7166	15.367
0.7333	15.357
0.7500	15.347
0.7666	15.341
0.7833	15.328
0.8000	15.319
0.8166	15.309
0.8333	15.303
0.8500	15.293
0.8666	15.287
0.8833	15.274
0.9000	15.271
0.9166	15.261
0.9333	15.252
0.9500	15.245
0.9666	15.239
0.9833	15.233
1.0000	15.223
1.2000	15.137
1.4000	15.085
1.6000	15.044
1.8000	15.015
2.0000	14.993
2.2000	14.977
2.4000	14.964
2.6000	14.951
2.8000	14.945
3.0000	14.938
3.2000	14.935
3.4000	14.932
3.6000	14.929
3.8000	14.926
4.0000	14.922
4.2000	14.919
4.4000	14.919
4.6000	14.916
4.8000	14.916
5.0000	14.919
5.2000	14.913
5.4000	14.913
5.6000	14.913
5.8000	14.913
6.0000	14.910
6.2000	14.913
6.4000	14.910
6.6000	14.910
6.8000	14.910
7.0000	14.910
7.2000	14.910
7.4000	14.910
7.6000	14.913
7.8000	14.910
8.0000	14.913
8.2000	14.913
8.4000	14.913
8.6000	14.913
8.8000	14.916
9.0000	14.913
9.2000	14.910
9.4000	14.910
9.6000	14.910
9.8000	14.913
10.0000	14.913
12.0000	14.906
14.0000	14.910
16.0000	14.906

DATA USED IN AQTESOLV MW09-15I-R

0	0	0	0.2	0.955	1	0.6833	0.479	1
0.0033	0	0	0.2033	0.949	1	0.7	0.469	1
0.0066	0	0	0.2066	0.946	1	0.7166	0.457	1
0.01	0.163	1	0.21	0.942	1	0.7333	0.447	1
0.0133	1.358	1	0.2133	0.939	1	0.75	0.437	1
0.0166	3.063	1	0.2166	0.933	1	0.7666	0.431	1
0.02	3.715	1	0.22	0.927	1	0.7833	0.418	1
0.0233	1.441	1	0.2233	0.923	1	0.8	0.409	1
0.0266	0.032	1	0.2266	0.92	1	0.8166	0.399	1
0.03	-0.007	0	0.23	0.917	1	0.8333	0.393	1
0.0333	1.14	1	0.2333	0.91	1	0.85	0.383	1
0.0366	2.172	1	0.2366	0.907	1	0.8666	0.377	1
0.04	1.639	1	0.24	0.901	1	0.8833	0.364	1
0.0433	0.866	1	0.2433	0.898	1	0.9	0.361	1
0.0466	0.974	1	0.2466	0.898	1	0.9166	0.351	1
0.05	1.431	1	0.25	0.891	1	0.9333	0.342	1
0.0533	1.358	1	0.2533	0.888	1	0.95	0.335	1
0.0566	1.089	1	0.2566	0.885	1	0.9666	0.329	1
0.06	1.144	1	0.26	0.882	1	0.9833	0.323	1
0.0633	1.262	1	0.2633	0.875	1	1	0.313	1
0.0666	1.192	1	0.2666	0.869	1	1.2	0.227	1
0.07	1.14	1	0.27	0.866	1	1.4	0.175	1
0.0733	1.173	1	0.2733	0.859	1	1.6	0.134	1
0.0766	1.176	1	0.2766	0.859	1	1.8	0.105	1
0.08	1.147	1	0.28	0.853	1	2	0.083	1
0.0833	1.144	1	0.2833	0.85	1	2.2	0.067	1
0.0866	1.147	1	0.2866	0.847	1	2.4	0.054	1
0.09	1.14	1	0.29	0.84	1	2.6	0.041	1
0.0933	1.128	1	0.2933	0.84	1	2.8	0.035	1
0.0966	1.121	1	0.2966	0.837	1	3	0.028	1
0.1	1.115	1	0.3	0.834	1	3.2	0.025	1
0.1033	1.109	1	0.3033	0.827	1	3.4	0.022	1
0.1066	1.102	1	0.3066	0.821	1	3.6	0.019	1
0.11	1.099	1	0.31	0.824	1	3.8	0.016	1
0.1133	1.089	1	0.3133	0.815	1	4	0.012	1
0.1166	1.083	1	0.3166	0.815	1	4.2	0.009	1
0.12	1.08	1	0.32	0.808	1	4.4	0.009	1
0.1233	1.077	1	0.3233	0.805	1	4.6	0.006	1
0.1266	1.067	1	0.3266	0.802	1	4.8	0.006	1
0.13	1.057	1	0.33	0.799	1	5	0.009	1
0.1333	1.057	1	0.3333	0.795	1	5.2	0.003	1
0.1366	1.048	1	0.35	0.773	1	5.4	0.003	1
0.14	1.045	1	0.3666	0.754	1	5.6	0.003	1
0.1433	1.038	1	0.3833	0.738	1	5.8	0.003	1
0.1466	1.032	1	0.4	0.719	1	6	0	1
0.15	1.029	1	0.4166	0.703	1	6.2	0.003	1
0.1533	1.022	1	0.4333	0.687	1	6.4	0	1
0.1566	1.019	1	0.45	0.668	1	6.6	0	1
0.16	1.013	1	0.4666	0.655	1	6.8	0	1
0.1633	1.01	1	0.4833	0.639	1	7	0	1
0.1666	1.003	1	0.5	0.62	1	7.2	0	1
0.17	0.997	1	0.5166	0.607	1	7.4	0	1
0.1733	0.994	1	0.5333	0.591	1	7.6	0.003	1
0.1766	0.987	1	0.55	0.575	1	7.8	0	1
0.18	0.984	1	0.5666	0.562	1	8	0.003	1
0.1833	0.981	1	0.5833	0.549	1	8.2	0.003	1
0.1866	0.974	1	0.6	0.537	1	8.4	0.003	1
0.19	0.971	1	0.6166	0.524	1	8.6	0.003	1
0.1933	0.965	1	0.6333	0.514	1	8.8	0.006	1
0.1966	0.962	1	0.65	0.501	1	9	0.003	1
			0.6666	0.489	1	9.2	0	1
						9.4	0	1
						9.6	0	1
						9.8	0.003	1
						10	0.003	1
						12	-0.004	0
						14	0	1
						16	-0.004	0

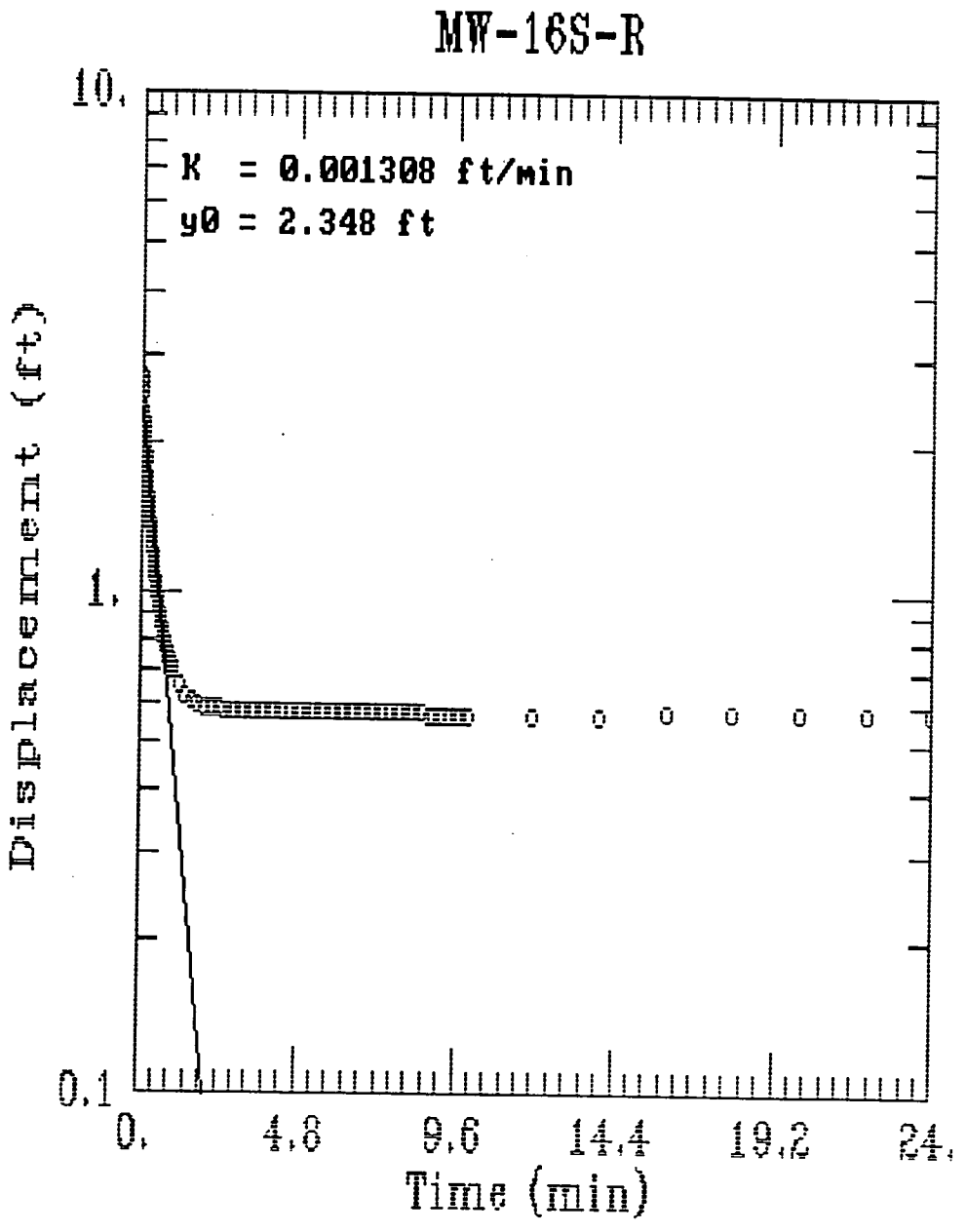
MW-16S-R
K = 0.001308 ft/min
y0 = 2.348 ft
10.
1.
0.1
Displacement (ft)
0.
4.8
9.6
14.4
19.2
24.
Time (min)

SE1000C
Environmental Logger
05/02 08:36
MW09-16S-R
Unit# 05014 Test 4
INPUT 1: Level (F) TOC
Reference 16.550
Linearity 0.040
Scale factor 10.050
Offset -0.060
Delay mSEC 50.000
Step 2 04/21 13:59:48
Elapsed Time INPUT 1

0.0000	16.470
0.0033	16.473
0.0066	19.219
0.0100	19.244
0.0133	19.142
0.0166	19.072
0.0200	18.859
0.0233	18.865
0.0266	18.859
0.0300	18.853
0.0333	18.846
0.0366	18.840
0.0400	18.834
0.0433	18.824
0.0466	18.818
0.0500	18.808
0.0533	18.799
0.0566	18.789
0.0600	18.779
0.0633	18.767
0.0666	18.757
0.0700	18.748
0.0733	18.735
0.0766	18.725
0.0800	18.716
0.0833	18.703
0.0866	18.694
0.0900	18.681
0.0933	18.668
0.0966	18.655
0.1000	18.643
0.1033	18.630
0.1066	18.617
0.1100	18.608
0.1133	18.592
0.1166	18.582
0.1200	18.569
0.1233	18.557
0.1266	18.487
0.1300	18.477
0.1333	18.467
0.1366	18.455
0.1400	18.445
0.1433	18.432
0.1466	18.420
0.1500	18.410
0.1533	18.397
0.1566	18.273
0.1600	18.276
0.1633	18.273
0.1666	18.264
0.1700	18.254
0.1733	18.244
0.1766	18.235
0.1800	18.225
0.1833	18.216
0.1866	18.206
0.1900	18.197
0.1933	18.184
0.1966	18.174
0.2000	18.165
0.2033	18.155
0.2066	18.146
0.2100	18.136
0.2133	18.127
0.2166	18.117
0.2200	18.108
0.2233	18.098
0.2266	18.088
0.2300	18.082
0.2333	18.072
0.2366	18.063
0.2400	18.053
0.2433	18.044
0.2466	18.037
0.2500	18.028
0.2533	18.018
0.2566	18.012
0.2600	18.002
0.2633	17.993
0.2666	17.986
0.2700	17.977
0.2733	17.971
0.2766	17.961
0.2800	17.955
0.2833	17.945
0.2866	17.939
0.2900	17.932
0.2933	17.923
0.2966	17.916
0.3000	17.910
0.3033	17.900
0.3066	17.894
0.3100	17.888
0.3133	17.878
0.3166	17.872
0.3200	17.865
0.3233	17.859
0.3266	17.853
0.3300	17.846
0.3333	17.840
0.3500	17.802
0.3666	17.770
0.3833	17.738
0.4000	17.706
0.4166	17.677
0.4333	17.652
0.4500	17.630
0.4666	17.604
0.4833	17.582
0.5000	17.563
0.5166	17.540
0.5333	17.525
0.5500	17.509
0.5666	17.489
0.5833	17.474
0.6000	17.461
0.6166	17.445
0.6333	17.432
0.6500	17.419
0.6666	17.407
0.6833	17.397
0.7000	17.384
0.7166	17.375
0.7333	17.362
0.7500	17.356
0.7666	17.346
0.7833	17.337
0.8000	17.327
0.8166	17.321
0.8333	17.311
0.8500	17.305
0.8666	17.298
0.8833	17.292
0.9000	17.286
0.9166	17.279
0.9333	17.273
0.9500	17.266
0.9666	17.263
0.9833	17.257
1.0000	17.251
1.2000	17.196
1.4000	17.171
1.6000	17.155
1.8000	17.145
2.0000	17.139
2.2000	17.136
2.4000	17.133
2.6000	17.129
2.8000	17.129
3.0000	17.126
3.2000	17.126
3.4000	17.126
3.6000	17.126
3.8000	17.126
4.0000	17.126
4.2000	17.126
4.4000	17.126
4.6000	17.126
4.8000	17.126
5.0000	17.126
5.2000	17.129
5.4000	17.126
5.6000	17.126
5.8000	17.126
6.0000	17.126
6.2000	17.126
6.4000	17.126
6.6000	17.126
6.8000	17.123
7.0000	17.123
7.2000	17.126
7.4000	17.123
7.6000	17.123
7.8000	17.123
8.0000	17.123
8.2000	17.123
8.4000	17.123
8.6000	17.123
8.8000	17.120
9.0000	17.120
9.2000	17.120
9.4000	17.120
9.6000	17.120
9.8000	17.120
10.0000	17.120
12.0000	17.120
14.0000	17.120
16.0000	17.123
18.0000	17.123
20.0000	17.123
22.0000	17.126
24.0000	17.123

DATA USED IN AQTESOLV MW09-16S-R

0	-0.08	0	0.2	1.615	1	0.6833	0.847	1
0.0033	-0.077	0	0.2033	1.605	1	0.7	0.834	1
0.0066	2.669	1	0.2066	1.596	1	0.7166	0.825	1
0.01	2.694	1	0.21	1.586	1	0.7333	0.812	1
0.0133	2.592	1	0.2133	1.577	1	0.75	0.806	1
0.0166	2.522	1	0.2166	1.567	1	0.7666	0.796	1
0.02	2.309	1	0.22	1.558	1	0.7833	0.787	1
0.0233	2.315	1	0.2233	1.548	1	0.8	0.777	1
0.0266	2.309	1	0.2266	1.538	1	0.8166	0.771	1
0.03	2.303	1	0.23	1.532	1	0.8333	0.761	1
0.0333	2.296	1	0.2333	1.522	1	0.85	0.755	1
0.0366	2.29	1	0.2366	1.513	1	0.8666	0.748	1
0.04	2.284	1	0.24	1.503	1	0.8833	0.742	1
0.0433	2.274	1	0.2433	1.494	1	0.9	0.736	1
0.0466	2.268	1	0.2466	1.487	1	0.9166	0.729	1
0.05	2.258	1	0.25	1.478	1	0.9333	0.723	1
0.0533	2.249	1	0.2533	1.468	1	0.95	0.716	1
0.0566	2.239	1	0.2566	1.462	1	0.9666	0.713	1
0.06	2.229	1	0.26	1.452	1	0.9833	0.707	1
0.0633	2.217	1	0.2633	1.443	1	1	0.701	1
0.0666	2.207	1	0.2666	1.436	1	1.2	0.646	1
0.07	2.198	1	0.27	1.427	1	1.4	0.621	1
0.0733	2.185	1	0.2733	1.421	1	1.6	0.605	1
0.0766	2.175	1	0.2766	1.411	1	1.8	0.595	1
0.08	2.166	1	0.28	1.405	1	2	0.589	1
0.0833	2.153	1	0.2833	1.395	1	2.2	0.586	1
0.0866	2.144	1	0.2866	1.389	1	2.4	0.583	1
0.09	2.131	1	0.29	1.382	1	2.6	0.579	1
0.0933	2.118	1	0.2933	1.373	1	2.8	0.579	1
0.0966	2.105	1	0.2966	1.366	1	3	0.576	1
0.1	2.093	1	0.3	1.36	1	3.2	0.576	1
0.1033	2.08	1	0.3033	1.35	1	3.4	0.576	1
0.1066	2.067	1	0.3066	1.344	1	3.6	0.576	1
0.11	2.058	1	0.31	1.338	1	3.8	0.576	1
0.1133	2.042	1	0.3133	1.328	1	4	0.576	1
0.1166	2.032	1	0.3166	1.322	1	4.2	0.576	1
0.12	2.019	1	0.32	1.315	1	4.4	0.576	1
0.1233	2.007	1	0.3233	1.309	1	4.6	0.576	1
0.1266	1.937	1	0.3266	1.303	1	4.8	0.576	1
0.13	1.927	1	0.33	1.296	1	5	0.576	1
0.1333	1.917	1	0.3333	1.29	1	5.2	0.579	1
0.1366	1.905	1	0.35	1.252	1	5.4	0.576	1
0.14	1.895	1	0.3666	1.22	1	5.6	0.576	1
0.1433	1.882	1	0.3833	1.188	1	5.8	0.576	1
0.1466	1.87	1	0.4	1.156	1	6	0.576	1
0.15	1.86	1	0.4166	1.127	1	6.2	0.576	1
0.1533	1.847	1	0.4333	1.102	1	6.4	0.576	1
0.1566	1.723	1	0.45	1.08	1	6.6	0.576	1
0.16	1.726	1	0.4666	1.054	1	6.8	0.573	1
0.1633	1.723	1	0.4833	1.032	1	7	0.573	1
0.1666	1.714	1	0.5	1.013	1	7.2	0.576	1
0.17	1.704	1	0.5166	0.99	1	7.4	0.573	1
0.1733	1.694	1	0.5333	0.975	1	7.6	0.573	1
0.1766	1.685	1	0.55	0.959	1	7.8	0.573	1
0.18	1.675	1	0.5666	0.939	1	8	0.573	1
0.1833	1.666	1	0.5833	0.924	1	8.2	0.573	1
0.1866	1.656	1	0.6	0.911	1	8.4	0.573	1
0.19	1.647	1	0.6166	0.895	1	8.6	0.573	1
0.1933	1.634	1	0.6333	0.882	1	8.8	0.57	1
0.1966	1.624	1	0.65	0.869	1	9	0.57	1
			0.6666	0.857	1	9.2	0.57	1
						9.4	0.57	1
						9.6	0.57	1
						9.8	0.57	1
						10	0.57	1
						12	0.57	1
						14	0.57	1
						16	0.573	1
						18	0.573	1
						20	0.573	1
						22	0.576	1
						24	0.573	1

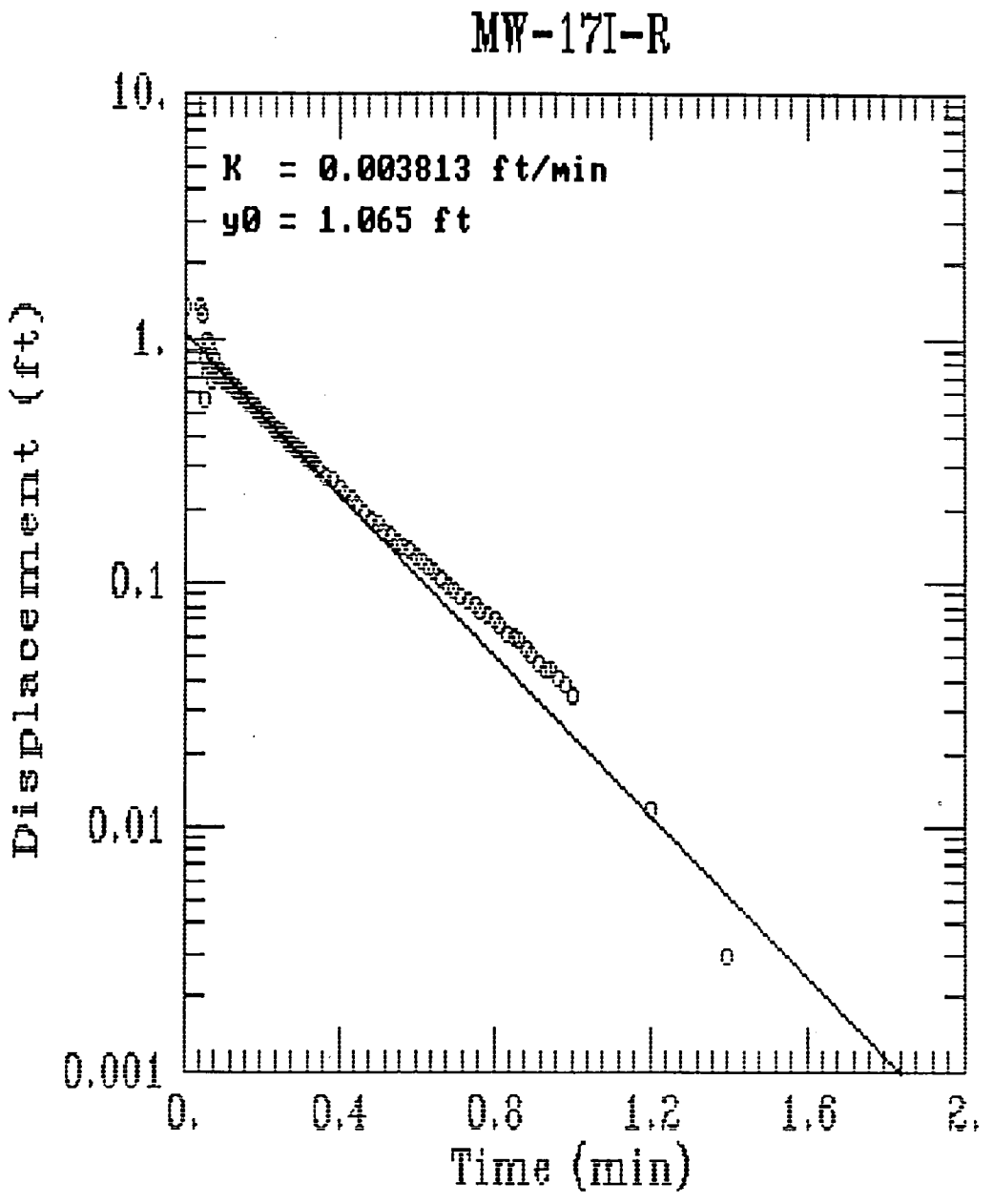
MW-17I-R
K = 0.003813 ft/min
y0 = 1.065 ft
10.
1.
0.1
0.01
0.001
Displacement (ft)
0.
0.4
0.8
1.2
1.6
2.
Time (min)

SE1000C
Environmental Logger
05/02 08:55
MW-09-17I-R
Unit# 05014 Test 6
INPUT 1: Level (F) TOC
Reference 15.880
Linearity 0.040
Scale factor 10.050
Offset -0.060
Delay mSEC 50.000
Step 2 04/21 16:37:45
Elapsed Time INPUT 1

0.0000	15.848
0.0033	15.838
0.0066	15.797
0.0100	15.838
0.0133	16.100
0.0166	17.964
0.0200	18.375
0.0233	18.349
0.0266	17.862
0.0300	17.024
0.0333	16.603
0.0366	16.259
0.0400	16.508
0.0433	17.241
0.0466	17.142
0.0500	16.740
0.0533	16.450
0.0566	16.616
0.0600	16.861
0.0633	16.845
0.0666	16.648
0.0700	16.552
0.0733	16.629
0.0766	16.715
0.0800	16.686
0.0833	16.600
0.0866	16.571
0.0900	16.600
0.0933	16.632
0.0966	16.603
0.1000	16.562
0.1033	16.555
0.1066	16.562
0.1100	16.568
0.1133	16.546
0.1166	16.527
0.1200	16.527
0.1233	16.527
0.1266	16.517
0.1300	16.508
0.1333	16.498
0.1366	16.495
0.1400	16.492
0.1433	16.482
0.1466	16.472
0.1500	16.466
0.1533	16.460
0.1566	16.453
0.1600	16.447
0.1633	16.441
0.1666	16.431
0.1700	16.425
0.1733	16.418
0.1766	16.415
0.1800	16.406
0.1833	16.399
0.1866	16.393
0.1900	16.390
0.1933	16.383
0.1966	16.377
0.2000	16.370
0.2033	16.364
0.2066	16.358
0.2100	16.351
0.2133	16.348
0.2166	16.342
0.2200	16.339
0.2233	16.332
0.2266	16.329
0.2300	16.323
0.2333	16.316
0.2366	16.313
0.2400	16.307
0.2433	16.300
0.2466	16.297
0.2500	16.291
0.2533	16.288
0.2566	16.281
0.2600	16.278
0.2633	16.272
0.2666	16.268
0.2700	16.262
0.2733	16.259
0.2766	16.256
0.2800	16.253
0.2833	16.246
0.2866	16.243
0.2900	16.240
0.2933	16.233
0.2966	16.230
0.3000	16.227
0.3033	16.224
0.3066	16.217
0.3100	16.214
0.3133	16.211
0.3166	16.208
0.3200	16.208
0.3233	16.202
0.3266	16.195
0.3300	16.192
0.3333	16.192
0.3500	16.173
0.3666	16.154
0.3833	16.141
0.4000	16.125
0.4166	16.109
0.4333	16.100
0.4500	16.087
0.4666	16.074
0.4833	16.064
0.5000	16.055
0.5166	16.045
0.5333	16.039
0.5500	16.029
0.5666	16.023
0.5833	16.017
0.6000	16.010
0.6166	16.004
0.6333	15.997
0.6500	15.991
0.6666	15.985
0.6833	15.978
0.7000	15.975
0.7166	15.969
0.7333	15.966
0.7500	15.962
0.7666	15.956
0.7833	15.953
0.8000	15.950
0.8166	15.946
0.8333	15.943
0.8500	15.940
0.8666	15.937
0.8833	15.934
0.9000	15.931
0.9166	15.927
0.9333	15.924
0.9500	15.924
0.9666	15.921
0.9833	15.918
1.0000	15.915
1.2000	15.892
1.4000	15.883
1.6000	15.876
1.8000	15.873
2.0000	15.870
2.2000	15.870
2.4000	15.870
2.6000	15.867
2.8000	15.867
3.0000	15.867
3.2000	15.867
3.4000	15.867
3.6000	15.864
3.8000	15.867
4.0000	15.864
4.2000	15.864
4.4000	15.864
4.6000	15.864
4.8000	15.864
5.0000	15.864
5.2000	15.864
5.4000	15.864
5.6000	15.860
5.8000	15.860
6.0000	15.860
6.2000	15.857
6.4000	15.860
6.6000	15.860
6.8000	15.860
7.0000	15.860
7.2000	15.864
7.4000	15.864
7.6000	15.860
7.8000	15.864
8.0000	15.864
8.2000	15.867
8.4000	15.870
8.6000	15.870
8.8000	15.873
9.0000	15.873
9.2000	15.873
9.4000	15.873
9.6000	15.876
9.8000	15.876
10.0000	15.876

DATA USED IN AQTESOLV MW09-17I-R

0	-0.032	0	0.2	0.49	1	0.6833	0.098	1
0.0033	-0.042	0	0.2033	0.484	1	0.7	0.095	1
0.0066	-0.083	0	0.2066	0.478	1	0.7166	0.089	1
0.01	-0.042	0	0.21	0.471	1	0.7333	0.086	1
0.0133	0.22	1	0.2133	0.468	1	0.75	0.082	1
0.0166	2.084	1	0.2166	0.462	1	0.7666	0.076	1
0.02	2.495	1	0.22	0.459	1	0.7833	0.073	1
0.0233	2.469	1	0.2233	0.452	1	0.8	0.07	1
0.0266	1.982	1	0.2266	0.449	1	0.8166	0.066	1
0.03	1.144	1	0.23	0.443	1	0.8333	0.063	1
0.0333	0.723	1	0.2333	0.436	1	0.85	0.06	1
0.0366	0.379	1	0.2366	0.433	1	0.8666	0.057	1
0.04	0.628	1	0.24	0.427	1	0.8833	0.054	1
0.0433	1.361	1	0.2433	0.42	1	0.9	0.051	1
0.0466	1.262	1	0.2466	0.417	1	0.9166	0.047	1
0.05	0.86	1	0.25	0.411	1	0.9333	0.044	1
0.0533	0.57	1	0.2533	0.408	1	0.95	0.044	1
0.0566	0.736	1	0.2566	0.401	1	0.9666	0.041	1
0.06	0.981	1	0.26	0.398	1	0.9833	0.038	1
0.0633	0.965	1	0.2633	0.392	1	1	0.035	1
0.0666	0.768	1	0.2666	0.388	1	1.2	0.012	1
0.07	0.672	1	0.27	0.382	1	1.4	0.003	1
0.0733	0.749	1	0.2733	0.379	1	1.6	-0.004	0
0.0766	0.835	1	0.2766	0.376	1	1.8	-0.007	0
0.08	0.806	1	0.28	0.373	1	2	-0.01	0
0.0833	0.72	1	0.2833	0.366	1	2.2	-0.01	0
0.0866	0.691	1	0.2866	0.363	1	2.4	-0.01	0
0.09	0.72	1	0.29	0.36	1	2.6	-0.013	0
0.0933	0.752	1	0.2933	0.353	1	2.8	-0.013	0
0.0966	0.723	1	0.2966	0.35	1	3	-0.013	0
0.1	0.682	1	0.3	0.347	1	3.2	-0.013	0
0.1033	0.675	1	0.3033	0.344	1	3.4	-0.013	0
0.1066	0.682	1	0.3066	0.337	1	3.6	-0.016	0
0.11	0.688	1	0.31	0.334	1	3.8	-0.013	0
0.1133	0.666	1	0.3133	0.331	1	4	-0.016	0
0.1166	0.647	1	0.3166	0.328	1	4.2	-0.016	0
0.12	0.647	1	0.32	0.328	1	4.4	-0.016	0
0.1233	0.647	1	0.3233	0.322	1	4.6	-0.016	0
0.1266	0.637	1	0.3266	0.315	1	4.8	-0.016	0
0.13	0.628	1	0.33	0.312	1	5	-0.016	0
0.1333	0.618	1	0.3333	0.312	1	5.2	-0.016	0
0.1366	0.615	1	0.35	0.293	1	5.4	-0.016	0
0.14	0.612	1	0.3666	0.274	1	5.6	-0.02	0
0.1433	0.602	1	0.3833	0.261	1	5.8	-0.02	0
0.1466	0.592	1	0.4	0.245	1	6	-0.02	0
0.15	0.586	1	0.4166	0.229	1	6.2	-0.023	0
0.1533	0.58	1	0.4333	0.22	1	6.4	-0.02	0
0.1566	0.573	1	0.45	0.207	1	6.6	-0.02	0
0.16	0.567	1	0.4666	0.194	1	6.8	-0.02	0
0.1633	0.561	1	0.4833	0.184	1	7	-0.02	0
0.1666	0.551	1	0.5	0.175	1	7.2	-0.016	0
0.17	0.545	1	0.5166	0.165	1	7.4	-0.016	0
0.1733	0.538	1	0.5333	0.159	1	7.6	-0.02	0
0.1766	0.535	1	0.55	0.149	1	7.8	-0.016	0
0.18	0.526	1	0.5666	0.143	1	8	-0.016	0
0.1833	0.519	1	0.5833	0.137	1	8.2	-0.013	0
0.1866	0.513	1	0.6	0.13	1	8.4	-0.01	0
0.19	0.51	1	0.6166	0.124	1	8.6	-0.01	0
0.1933	0.503	1	0.6333	0.117	1	8.8	-0.007	0
0.1966	0.497	1	0.65	0.111	1	9	-0.007	0
			0.6666	0.105	1	9.2	-0.007	0
						9.4	-0.007	0
						9.6	-0.004	0
						9.8	-0.004	0
						10	-0.004	0

MW-17D-R

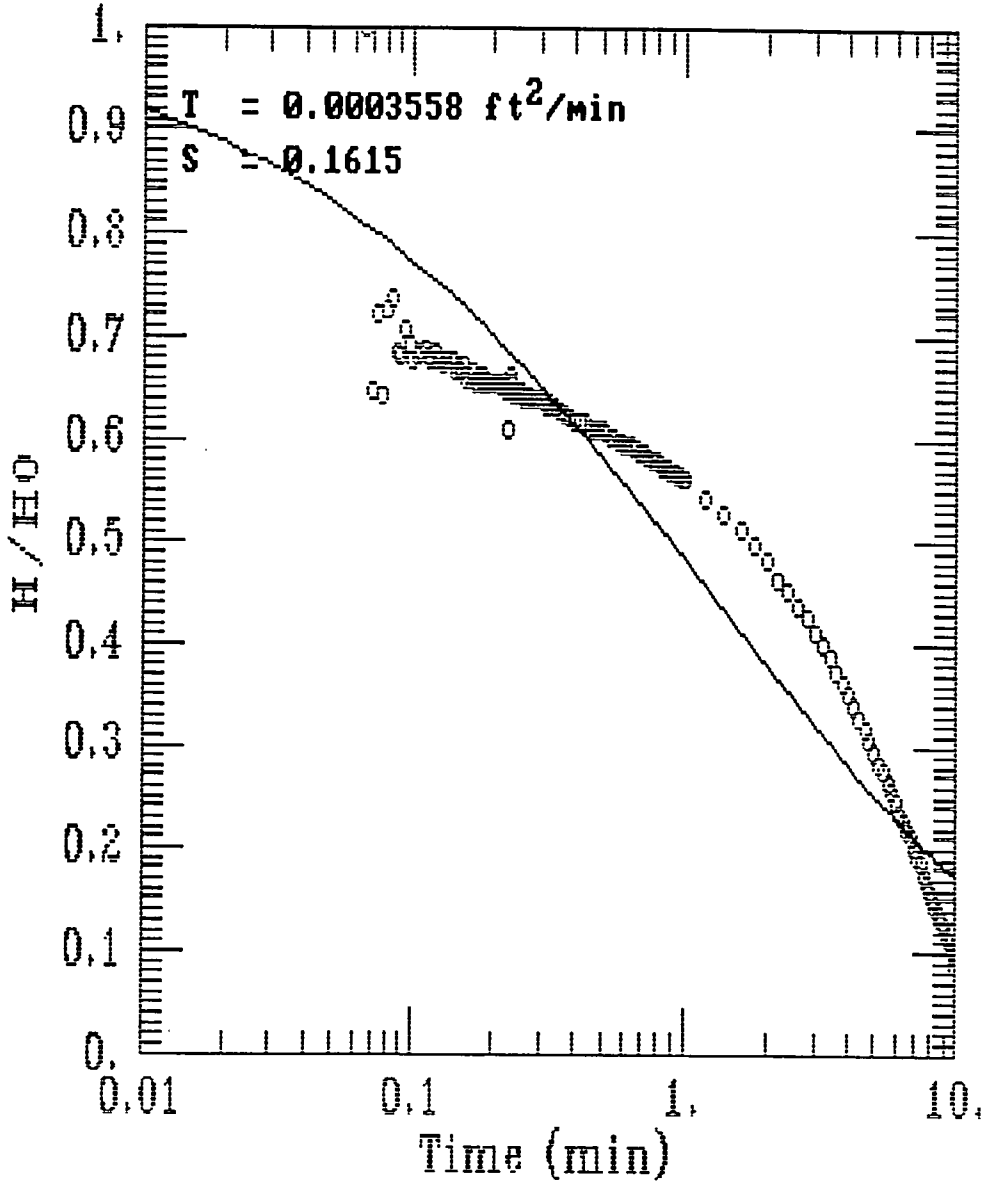
T = 0.0003558 ft²/min
S = 0.1615
H/H0
Time (min)
1.
0.9
0.8
0.7
0.6
0.5
0.4
0.3
0.2
0.1
0.
0.01
0.1
1.
10.

SE1000C
Environmental Logger
04/27 18:14
MW09-17D-R
Unit# 05001 Test 8
Setups: INPUT 1
——— ———
Type Level (F)
Mode TOC
I.D. 00171
Reference 17.440
Linearity 0.040
Scale factor 10.020
Offset -0.010
Delay mSEC 50.000
Step 2 04/21 16:53:11
Elapsed Time INPUT 1
SE1000C
Environmental Logger
04/27 18:14
Unit# 05001 Test 8
Setups: INPUT 1
——— ———
Type Level (F)
Mode TOC
I.D. 00171
Reference 17.440
Linearity 0.040
Scale factor 10.020
Offset -0.010
Delay mSEC 50.000
Step 2 04/21 16:53:11
Elapsed Time INPUT 1
——— ———

0.0000	16.341
0.0033	16.341
0.0066	16.341
0.0100	16.309
0.0133	16.421
0.0166	17.008
0.0200	18.263
0.0233	20.159
0.0266	21.292
0.0300	20.622
0.0333	18.576
0.0366	18.659
0.0400	19.926
0.0433	19.939
0.0466	18.391
0.0500	18.653
0.0533	18.503
0.0566	18.398
0.0600	18.050
0.0633	18.340
0.0666	18.710
0.0700	18.260
0.0733	18.356
0766	18.257
0800	18.362
0.0833	18.375
0.0866	18.308
0.0900	18.305
0.0933	18.337
0.0966	18.318
0.1000	18.302
0.1033	18.305
0.1066	18.311
0.1100	18.315
0.1133	18.305
0.1166	18.302
0.1200	18.311
0.1233	18.302
0.1266	18.299
0.1300	18.295
0.1333	18.302
0.1366	18.299
0.1400	18.302
0.1433	18.286
0.1466	18.289
0.1500	18.286
0.1533	18.295
0.1566	18.276
0.1600	18.279
0.1633	18.286
0.1666	18.283
0.1700	18.273
0.1733	18.270
0.1766	18.279
0.1800	18.276
0.1833	18.279
0.1866	18.270
0.1900	18.270
0.1933	18.273
0.1966	18.270
0.2000	18.270
0.2033	18.270
0.2066	18.270
0.2100	18.267
0.2133	18.270
0.2166	18.267
0.2200	18.267
0.2233	18.260
0.2266	18.216
0.2300	18.279
0.2333	18.270
0.2366	18.257
0.2400	18.263
0.2433	18.257
0.2466	18.257
0.2500	18.257
0.2533	18.260
0.2566	18.257
0.2600	18.254
0.2633	18.257
0.2666	18.257
0.2700	18.254
0.2733	18.254
0.2766	18.254
0.2800	18.251
0.2833	18.254
0.2866	18.251
0.2900	18.251
0.2933	18.251
0.2966	18.251
0.3000	18.251
0.3033	18.247
0.3066	18.247
0.3100	18.247
0.3133	18.244
0.3166	18.247
0.3200	18.244
0.3233	18.244
0.3266	18.244
0.3300	18.241
0.3333	18.241
0.3500	18.238
0.3666	18.232
0.3833	18.228
0.4000	18.225
0.4166	18.222
0.4333	18.222
0.4500	18.216
0.4666	18.216
0.4833	18.212
0.5000	18.212
0.5166	18.209
0.5333	18.206
0.5500	18.203
0.5666	18.200
0.5833	18.200
0.6000	18.196
0.6166	18.196
0.6333	18.193
0.6500	18.190
0.6666	18.190
0.6833	18.187
0.7000	18.184
0.7166	18.184
0.7333	18.181
0.7500	18.177
0.7666	18.177
0.7833	18.177
0.8000	18.174
0.8166	18.171
0.8333	18.168
0.8500	18.168
0.8666	18.164
0.8833	18.161
0.9000	18.161
0.9166	18.161
0.9333	18.158
0.9500	18.158
0.9666	18.155
0.9833	18.152
1.0000	18.152
1.2000	18.126
1.4000	18.107
1.6000	18.088
1.8000	18.069
2.0000	18.050
2.2000	18.030
2.4000	18.014
2.6000	17.995
2.8000	17.979
3.0000	17.960
3.2000	17.947
3.4000	17.931
3.6000	17.915
3.8000	17.899
4.0000	17.887
4.2000	17.871
4.4000	17.855
4.6000	17.842
4.8000	17.829
5.0000	17.816
5.2000	17.800
5.4000	17.791
5.6000	17.778
5.8000	17.765
6.0000	17.753
6.2000	17.740
6.4000	17.730
6.6000	17.717
6.8000	17.708
7.0000	17.695
7.2000	17.685
7.4000	17.676
7.6000	17.663
7.8000	17.654
8.0000	17.644
8.2000	17.634
8.4000	17.625
8.6000	17.615
8.8000	17.606
9.0000	17.596
9.2000	17.587
9.4000	17.580
9.6000	17.570
9.8000	17.564
10.0000	17.554

DATA USED IN AQTESOLV MW09-17D-R

0.02	0.823	1	0.2166	0.827	1	0.75	0.737	1
0.0233	2.719	1	0.22	0.827	1	0.7666	0.737	1
0.0266	3.852	1	0.2233	0.82	1	0.7833	0.737	1
0.03	3.182	1	0.2266	0.776	1	0.8	0.734	1
0.0333	1.136	1	0.23	0.839	1	0.8166	0.731	1
0.0366	1.219	1	0.2333	0.83	1	0.8333	0.728	1
0.04	2.486	1	0.2366	0.817	1	0.85	0.728	1
0.0433	2.499	1	0.24	0.823	1	0.8666	0.724	1
0.0466	0.951	1	0.2433	0.817	1	0.8833	0.721	1
0.05	1.213	1	0.2466	0.817	1	0.9	0.721	1
0.0533	1.063	1	0.25	0.817	1	0.9166	0.721	1
0.0566	0.958	1	0.2533	0.82	1	0.9333	0.718	1
0.06	0.61	1	0.2566	0.817	1	0.95	0.718	1
0.0633	0.9	1	0.26	0.814	1	0.9666	0.715	1
0.0666	1.27	1	0.2633	0.817	1	0.9833	0.712	1
0.07	0.82	1	0.2666	0.817	1	1	0.712	1
0.0733	0.916	1	0.27	0.814	1	1.2	0.686	1
0.0766	0.817	1	0.2733	0.814	1	1.4	0.667	1
0.08	0.922	1	0.2766	0.814	1	1.6	0.648	1
0.0833	0.935	1	0.28	0.811	1	1.8	0.629	1
0.0866	0.868	1	0.2833	0.814	1	2	0.61	1
0.09	0.865	1	0.2866	0.811	1	2.2	0.59	1
0.0933	0.897	1	0.29	0.811	1	2.4	0.574	1
0.0966	0.878	1	0.2933	0.811	1	2.6	0.555	1
0.1	0.862	1	0.2966	0.811	1	2.8	0.539	1
0.1033	0.865	1	0.3	0.811	1	3	0.52	1
0.1066	0.871	1	0.3033	0.807	1	3.2	0.507	1
0.11	0.875	1	0.3066	0.807	1	3.4	0.491	1
0.1133	0.865	1	0.31	0.807	1	3.6	0.475	1
0.1166	0.862	1	0.3133	0.804	1	3.8	0.459	1
0.12	0.871	1	0.3166	0.807	1	4	0.447	1
0.1233	0.862	1	0.32	0.804	1	4.2	0.431	1
0.1266	0.859	1	0.3233	0.804	1	4.4	0.415	1
0.13	0.855	1	0.3266	0.804	1	4.6	0.402	1
0.1333	0.862	1	0.33	0.801	1	4.8	0.389	1
0.1366	0.859	1	0.3333	0.801	1	5	0.376	1
0.14	0.862	1	0.35	0.798	1	5.2	0.36	1
0.1433	0.846	1	0.3666	0.792	1	5.4	0.351	1
0.1466	0.849	1	0.3833	0.788	1	5.6	0.338	1
0.15	0.846	1	0.4	0.785	1	5.8	0.325	1
0.1533	0.855	1	0.4166	0.782	1	6	0.313	1
0.1566	0.836	1	0.4333	0.782	1	6.2	0.3	1
0.16	0.839	1	0.45	0.776	1	6.4	0.29	1
0.1633	0.846	1	0.4666	0.776	1	6.6	0.277	1
0.1666	0.843	1	0.4833	0.772	1	6.8	0.268	1
0.17	0.833	1	0.5	0.772	1	7	0.255	1
0.1733	0.83	1	0.5166	0.769	1	7.2	0.245	1
0.1766	0.839	1	0.5333	0.766	1	7.4	0.236	1
0.18	0.836	1	0.55	0.763	1	7.6	0.223	1
0.1833	0.839	1	0.5666	0.76	1	7.8	0.214	1
0.1866	0.83	1	0.5833	0.76	1	8	0.204	1
0.19	0.83	1	0.6	0.756	1	8.2	0.194	1
0.1933	0.833	1	0.6166	0.756	1	8.4	0.185	1
0.1966	0.83	1	0.6333	0.753	1	8.6	0.175	1
0.2	0.83	1	0.65	0.75	1	8.8	0.166	1
0.2033	0.83	1	0.6666	0.75	1	9	0.156	1
0.2066	0.83	1	0.6833	0.747	1	9.2	0.147	1
0.21	0.827	1	0.7	0.744	1	9.4	0.14	1
0.2133	0.83	1	0.7166	0.744	1	9.6	0.13	1
			0.7333	0.741	1	9.8	0.124	1
						10	0.114	1

MW-18I-F

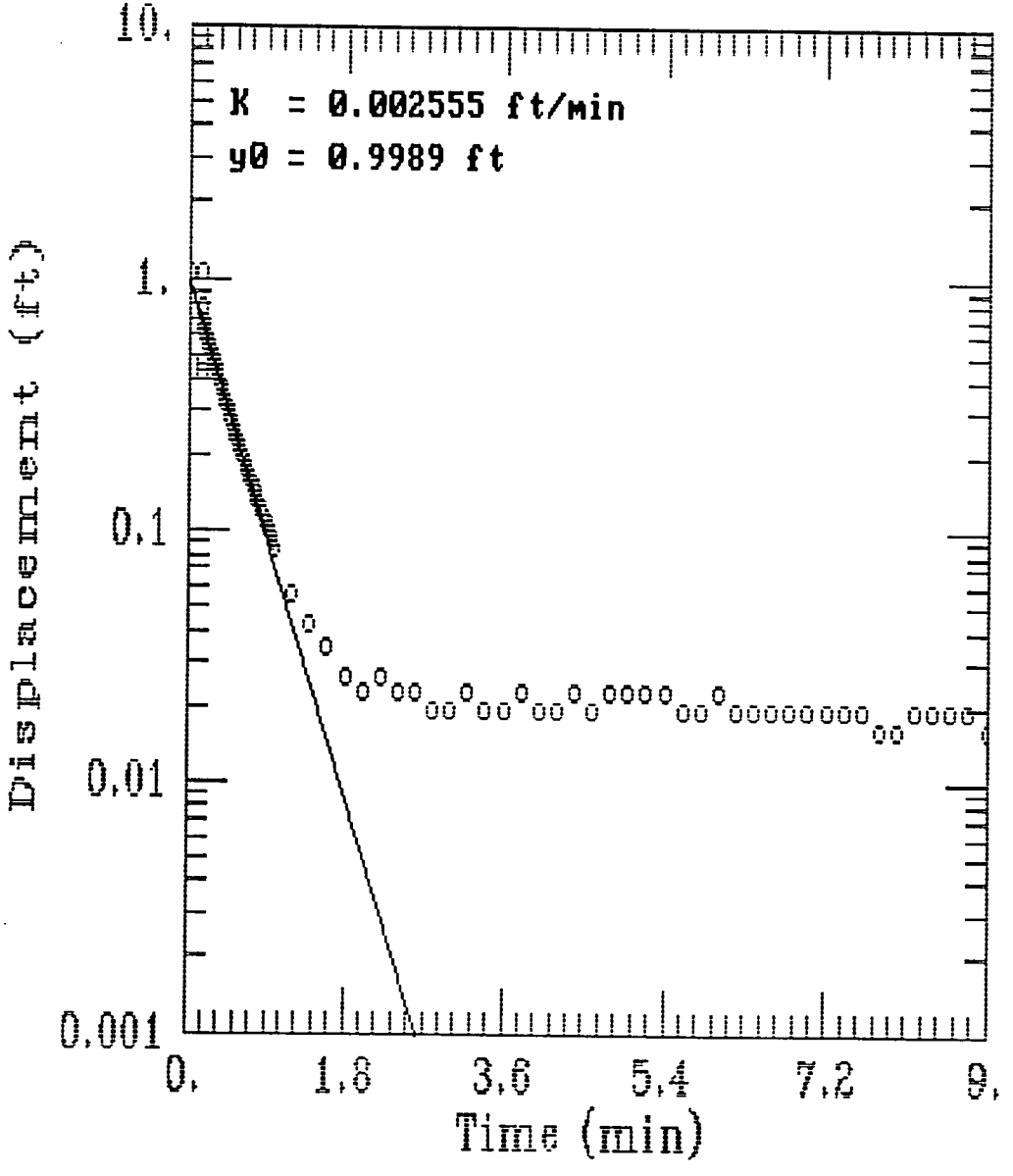
K = 0.002555 ft/min
y0 = 0.9989 ft
10.
1.
0.1
0.01
0.001
Displacement (ft)
0.
1.8
3.6
5.4
7.2
9.
Time (min)

SE1000C
Environmental Logger
4/27 17:48
MW09-18I-F
Unit# 05001 Test 6
Setups: INPUT 1

Type	Level (F)
Mode	TOC
I.D.	00183
Reference	13.280
Linearity	0.040
Scale factor	10.020
Offset	-0.010
Delay mSEC	50.000

Step 1 04/21 14:06:33
Elapsed Time INPUT 1

0.0000	13.270
0.0033	13.270
0.0066	13.264
0.0100	13.261
0.0133	13.251
0.0166	13.267
0.0200	12.725
0.0233	12.292
0.0266	11.817
0.0300	12.053
0.0333	12.381
0.0366	12.101
0400	11.858
0433	11.925
0.0466	12.094
0.0500	12.158
0.0533	12.270
0.0566	12.177
0.0600	11.868
0.0633	11.801
0.0666	11.808
0.0700	11.967
0.0733	12.145
0.0766	11.945
0.0800	11.763
0.0833	11.782
0.0866	11.699
0.0900	11.674
0.0933	11.814
0.0966	12.136
0.1000	12.416
0.1033	12.372
0.1066	12.199
0.1100	11.894
0.1133	12.231
0.1166	12.356
0.1200	12.400
0.1233	12.642
0.1266	12.773
0.1300	12.843
1333	12.795
1366	12.620
0.1400	12.301
0.1433	12.215
0.1466	12.521
0.1500	12.853
0.1533	12.821
0.1566	12.652
0.1600	12.518
0.1633	12.540
0.1666	12.646
0.1700	12.697
0.1733	12.662
0.1766	12.623
0.1800	12.636
0.1833	12.668
0.1866	12.681
0.1900	12.678
0.1933	12.674
0.1966	12.687
0.2000	12.690
0.2033	12.700
0.2066	12.703
0.2100	12.709
0.2133	12.716
0.2166	12.716
0.2200	12.722
0.2233	12.728
0.2266	12.735
0.2300	12.738
0.2333	12.744
0.2366	12.748
0.2400	12.754
0.2433	12.760
0.2466	12.760
0.2500	12.770
0.2533	12.773
0.2566	12.779
0.2600	12.783
0.2633	12.789
0.2666	12.789
0.2700	12.792
0.2733	12.802
0.2766	12.805
0.2800	12.808
0.2833	12.811
0.2866	12.818
0.2900	12.818
0.2933	12.827
0.2966	12.830
0.3000	12.834
0.3033	12.837
0.3066	12.843
0.3100	12.843
0.3133	12.846
0.3166	12.850
0.3200	12.856
0.3233	12.862
0.3266	12.859
0.3300	12.866
0.3333	12.872
0.3500	12.888
0.3666	12.904
0.3833	12.920
0.4000	12.939
0.4166	12.955
0.4333	12.964
0.4500	12.980
0.4666	12.993
0.4833	13.002
0.5000	13.015
0.5166	13.028
0.5333	13.038
0.5500	13.047
0.5666	13.057
0.5833	13.063
0.6000	13.076
0.6166	13.079
0.6333	13.085
0.6500	13.098
0.6666	13.104
0.6833	13.111
0.7000	13.117
0.7166	13.124
0.7333	13.130
0.7500	13.133
0.7666	13.139
0.7833	13.146
0.8000	13.152
0.8166	13.155
0.8333	13.159
0.8500	13.165
0.8666	13.165
0.8833	13.171
0.9000	13.174
0.9166	13.178
0.9333	13.181
0.9500	13.184
0.9666	13.187
0.9833	13.190
1.0000	13.194
1.2000	13.225
1.4000	13.238
1.6000	13.245
1.8000	13.254
2.0000	13.257
2.2000	13.254
2.4000	13.257
2.6000	13.257
2.8000	13.261
3.0000	13.261
3.2000	13.257
3.4000	13.261
3.6000	13.261
3.8000	13.257
4.0000	13.261
4.2000	13.261
4.4000	13.257
4.6000	13.261
4.8000	13.257
5.0000	13.257
5.2000	13.257
5.4000	13.257
5.6000	13.261
5.8000	13.261
6.0000	13.257
6.2000	13.261
6.4000	13.261
6.6000	13.261
6.8000	13.261
7.0000	13.261
7.2000	13.261
7.4000	13.261
7.6000	13.261
7.8000	13.264
8.0000	13.264
8.2000	13.261
8.4000	13.261
8.6000	13.261
8.8000	13.261
9.0000	13.264
9.2000	13.264
9.4000	13.267
9.6000	13.264
9.8000	13.264
10.0000	13.264
12.0000	13.264
14.0000	13.264
16.0000	13.264
18.0000	13.264

DATA USED IN AQTESOLV MW09-18I-F

0	0.01	1	0.2033	0.58	1	0.6833	0.169	1
0.0033	0.01	1	0.2066	0.577	1	0.7	0.163	1
0.0066	0.016	1	0.21	0.571	1	0.7166	0.156	1
0.01	0.019	1	0.2133	0.564	1	0.7333	0.15	1
0.0133	0.029	1	0.2166	0.564	1	0.75	0.147	1
0.0166	0.013	1	0.22	0.558	1	0.7666	0.141	1
0.02	0.555	1	0.2233	0.552	1	0.7833	0.134	1
0.0233	0.988	1	0.2266	0.545	1	0.8	0.128	1
0.0266	1.463	1	0.23	0.542	1	0.8166	0.125	1
0.03	1.227	1	0.2333	0.536	1	0.8333	0.121	1
0.0333	0.899	1	0.2366	0.532	1	0.85	0.115	1
0.0366	1.179	1	0.24	0.526	1	0.8666	0.115	1
0.04	1.422	1	0.2433	0.52	1	0.8833	0.109	1
0.0433	1.355	1	0.2466	0.52	1	0.9	0.106	1
0.0466	1.186	1	0.25	0.51	1	0.9166	0.102	1
0.05	1.122	1	0.2533	0.507	1	0.9333	0.099	1
0.0533	1.01	1	0.2566	0.501	1	0.95	0.096	1
0.0566	1.103	1	0.26	0.497	1	0.9666	0.093	1
0.06	1.412	1	0.2633	0.491	1	0.9833	0.09	1
0.0633	1.479	1	0.2666	0.491	1	1	0.086	1
0.0666	1.472	1	0.27	0.488	1	1.2	0.055	1
0.07	1.313	1	0.2733	0.478	1	1.4	0.042	1
0.0733	1.135	1	0.2766	0.475	1	1.6	0.035	1
0.0766	1.335	1	0.28	0.472	1	1.8	0.026	1
0.08	1.517	1	0.2833	0.469	1	2	0.023	1
0.0833	1.498	1	0.2866	0.462	1	2.2	0.026	1
0.0866	1.581	1	0.29	0.462	1	2.4	0.023	1
0.09	1.606	1	0.2933	0.453	1	2.6	0.023	1
0.0933	1.466	1	0.2966	0.45	1	2.8	0.019	1
0.0966	1.144	1	0.3	0.446	1	3	0.019	1
0.1	0.864	1	0.3033	0.443	1	3.2	0.023	1
0.1033	0.908	1	0.3066	0.437	1	3.4	0.019	1
0.1066	1.081	1	0.31	0.437	1	3.6	0.019	1
0.11	1.386	1	0.3133	0.434	1	3.8	0.023	1
0.1133	1.049	1	0.3166	0.43	1	4	0.019	1
0.1166	0.924	1	0.32	0.424	1	4.2	0.019	1
0.12	0.88	1	0.3233	0.418	1	4.4	0.023	1
0.1233	0.638	1	0.3266	0.421	1	4.6	0.019	1
0.1266	0.507	1	0.33	0.414	1	4.8	0.023	1
0.13	0.437	1	0.3333	0.408	1	5	0.023	1
0.1333	0.485	1	0.35	0.392	1	5.2	0.023	1
0.1366	0.66	1	0.3666	0.376	1	5.4	0.023	1
0.14	0.979	1	0.3833	0.36	1	5.6	0.019	1
0.1433	1.065	1	0.4	0.341	1	5.8	0.019	1
0.1466	0.759	1	0.4166	0.325	1	6	0.023	1
0.15	0.427	1	0.4333	0.316	1	6.2	0.019	1
0.1533	0.459	1	0.45	0.3	1	6.4	0.019	1
0.1566	0.628	1	0.4666	0.287	1	6.6	0.019	1
0.16	0.762	1	0.4833	0.278	1	6.8	0.019	1
0.1633	0.74	1	0.5	0.265	1	7	0.019	1
0.1666	0.634	1	0.5166	0.252	1	7.2	0.019	1
0.17	0.583	1	0.5333	0.242	1	7.4	0.019	1
0.1733	0.618	1	0.55	0.233	1	7.6	0.019	1
0.1766	0.657	1	0.5666	0.223	1	7.8	0.016	1
0.18	0.644	1	0.5833	0.217	1	8	0.016	1
0.1833	0.612	1	0.6	0.204	1	8.2	0.019	1
0.1866	0.599	1	0.6166	0.201	1	8.4	0.019	1
0.19	0.602	1	0.6333	0.195	1	8.6	0.019	1
0.1933	0.606	1	0.65	0.182	1	8.8	0.019	1
0.1966	0.593	1	0.6666	0.176	1	9	0.016	1
0.2	0.59	1				9.2	0.016	1
						9.4	0.013	1
						9.6	0.016	1
						9.8	0.016	1
						10	0.016	1
						12	0.016	1
						14	0.016	1
						16	0.016	1
						18	0.016	1

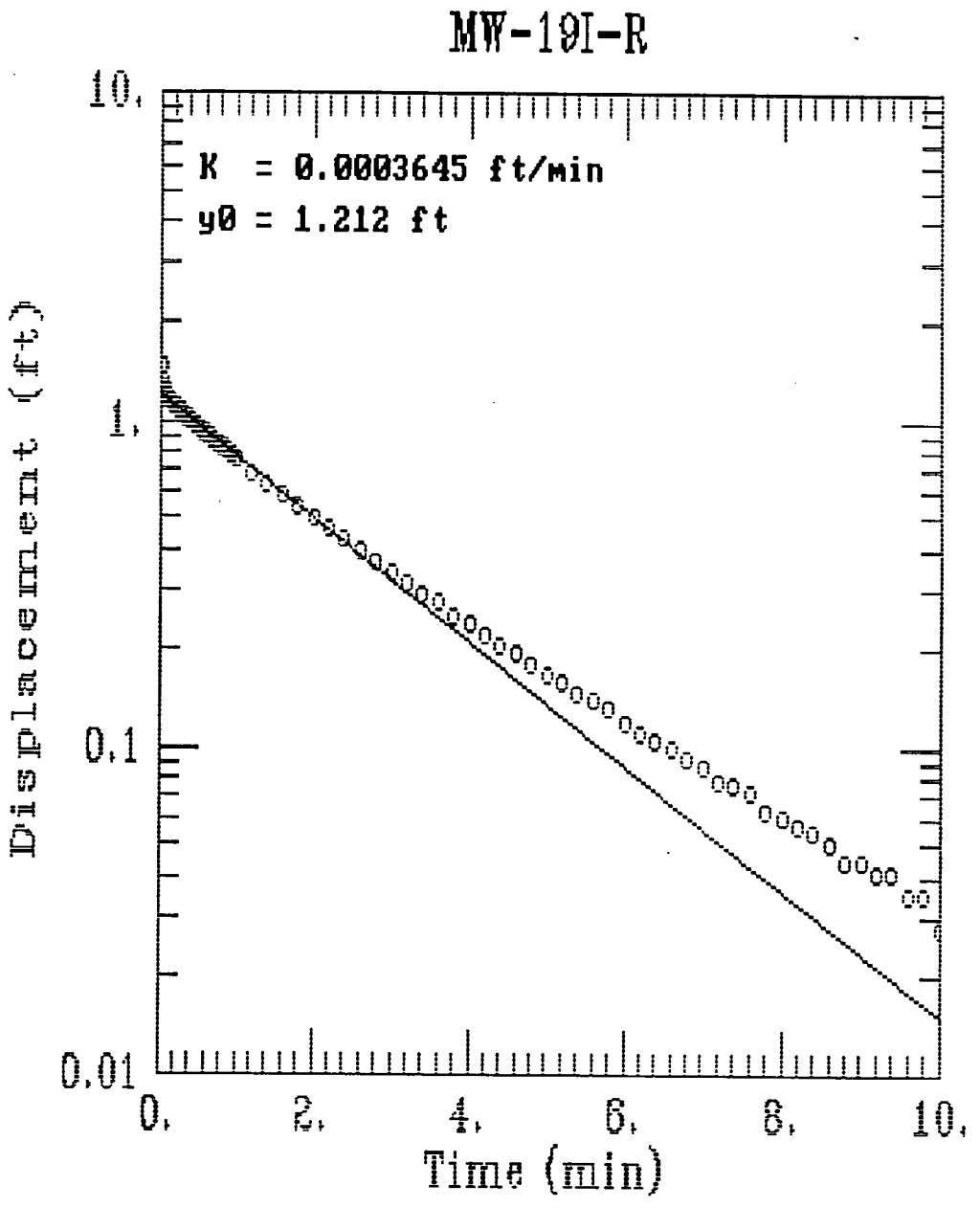
MW-19I-R
K = 0.0003645 ft/min
y0 = 1.212 ft
10.
1.
0.1
0.01
Displacement (ft)
0.
2.
4.
6.
8.
10.
Time (min)

SE1000C
Environmental Logger
04/27 18:31
MW09-19I-R
Unit# 05001 Test 10
Setups: INPUT 1

Type	Level (F)
Mode	TOC
I.D.	00193
Reference	13.560
Linearity	0.040
Scale factor	10.020
Offset	-0.010
Delay mSEC	50.000

Step 2 04/24 10:47:15
Elapsed Time INPUT 1

0.0000	13.509
0.0033	13.505
0.0066	13.499
0.0100	13.582
0.0133	15.299
0.0166	17.321
0.0200	19.479
0.0233	17.175
0.0266	16.433
0.0300	16.306
0.0333	16.710
0.0366	15.685
0.0400	15.544
0.0433	15.261
0.0466	14.117
0.0500	14.707
0.0533	14.764
0.0566	15.016
0.0600	14.882
0.0633	14.707
0.0666	14.790
0.0700	14.825
0.0733	14.751
0.0766	14.770
0.0800	14.770
0.0833	14.758
0.0866	14.751
0.0900	14.745
0.0933	14.748
0.0966	14.742
0.1000	14.742
0.1033	14.739
0.1066	14.732
0.1100	14.726
0.1133	14.726
0.1166	14.726
0.1200	14.723
0.1233	14.720
0.1266	14.716
0.1300	14.713
0.1333	14.707
0.1366	14.710
0.1400	14.707
0.1433	14.707
0.1466	14.704
0.1500	14.697
0.1533	14.697
0.1566	14.694
0.1600	14.691
0.1633	14.684
0.1666	14.684
0.1700	14.684
0.1733	14.681
0.1766	14.678
0.1800	14.678
0.1833	14.675
0.1866	14.669
0.1900	14.672
0.1933	14.672
0.1966	14.665
0.2000	14.665
0.2033	14.665
0.2066	14.662
0.2100	14.659
0.2133	14.659
0.2166	14.653
0.2200	14.653
0.2233	14.649
0.2266	14.649
0.2300	14.649
0.2333	14.646
0.2366	14.643
0.2400	14.643
0.2433	14.640
0.2466	14.640
0.2500	14.640
0.2533	14.637
0.2566	14.633
0.2600	14.630
0.2633	14.627
0.2666	14.624
0.2700	14.627
0.2733	14.624
0.2766	14.624
0.2800	14.621
0.2833	14.621
0.2866	14.618
0.2900	14.614
0.2933	14.614
0.2966	14.611
0.3000	14.611
0.3033	14.608
0.3066	14.605
0.3100	14.602
0.3133	14.602
0.3166	14.602
0.3200	14.598
0.3233	14.595
0.3266	14.595
0.3300	14.595
0.3333	14.592
0.3500	14.579
0.3666	14.573
0.3833	14.566
0.4000	14.557
0.4166	14.551
0.4333	14.541
0.4500	14.531
0.4666	14.525
0.4833	14.519
0.5000	14.509
0.5166	14.503
0.5333	14.493
0.5500	14.490
0.5666	14.484
0.5833	14.477
0.6000	14.471
0.6166	14.465
0.6333	14.455
0.6500	14.449
0.6666	14.446
0.6833	14.436
0.7000	14.430
0.7166	14.423
0.7333	14.420
0.7500	14.414
0.7666	14.407
0.7833	14.401
0.8000	14.391
0.8166	14.388
0.8333	14.382
0.8500	14.379
0.8666	14.372
0.8833	14.366
0.9000	14.363
0.9166	14.353
0.9333	14.350
0.9500	14.343
0.9666	14.337
0.9833	14.331
1.0000	14.328
1.2000	14.251
1.4000	14.197
1.6000	14.149
1.8000	14.101
2.0000	14.063
2.2000	14.025
2.4000	13.993
2.6000	13.961
2.8000	13.929
3.0000	13.904
3.2000	13.881
3.4000	13.856
3.6000	13.837
3.8000	13.814
4.0000	13.799
4.2000	13.783
4.4000	13.767
4.6000	13.754
4.8000	13.738
5.0000	13.728
5.2000	13.719
5.4000	13.706
5.6000	13.697
5.8000	13.690
6.0000	13.678
6.2000	13.671
6.4000	13.665
6.6000	13.658
6.8000	13.652
7.0000	13.646
7.2000	13.639
7.4000	13.636
7.6000	13.633
7.8000	13.623
8.0000	13.620
8.2000	13.617
8.4000	13.614
8.6000	13.611
8.8000	13.604
9.0000	13.604
9.2000	13.601
9.4000	13.601
9.6000	13.595
9.8000	13.595
10.0000	13.588

DATA USED IN AQTESOLV MW09-19I-R

0.01	0.022	1	0.2066	1.102	1	0.7166	0.863	1
0.0133	1.739	1	0.21	1.099	1	0.7333	0.86	1
0.0166	3.761	1	0.2133	1.099	1	0.75	0.854	1
0.02	5.919	1	0.2166	1.093	1	0.7666	0.847	1
0.0233	3.615	1	0.22	1.093	1	0.7833	0.841	1
0.0266	2.873	1	0.2233	1.089	1	0.8	0.831	1
0.03	2.746	1	0.2266	1.089	1	0.8166	0.828	1
0.0333	3.15	1	0.23	1.089	1	0.8333	0.822	1
0.0366	2.125	1	0.2333	1.086	1	0.85	0.819	1
0.04	1.984	1	0.2366	1.083	1	0.8666	0.812	1
0.0433	1.701	1	0.24	1.083	1	0.8833	0.806	1
0.0466	0.557	1	0.2433	1.08	1	0.9	0.803	1
0.05	1.147	1	0.2466	1.08	1	0.9166	0.793	1
0.0533	1.204	1	0.25	1.08	1	0.9333	0.79	1
0.0566	1.456	1	0.2533	1.077	1	0.95	0.783	1
0.06	1.322	1	0.2566	1.073	1	0.9666	0.777	1
0.0633	1.147	1	0.26	1.07	1	0.9833	0.771	1
0.0666	1.23	1	0.2633	1.067	1	1	0.768	1
0.07	1.265	1	0.2666	1.064	1	1.2	0.691	1
0.0733	1.191	1	0.27	1.067	1	1.4	0.637	1
0.0766	1.21	1	0.2733	1.064	1	1.6	0.589	1
0.08	1.21	1	0.2766	1.064	1	1.8	0.541	1
0.0833	1.198	1	0.28	1.061	1	2	0.503	1
0.0866	1.191	1	0.2833	1.061	1	2.2	0.465	1
0.09	1.185	1	0.2866	1.058	1	2.4	0.433	1
0.0933	1.188	1	0.29	1.054	1	2.6	0.401	1
0.0966	1.182	1	0.2933	1.054	1	2.8	0.369	1
0.1	1.182	1	0.2966	1.051	1	3	0.344	1
0.1033	1.179	1	0.3	1.051	1	3.2	0.321	1
0.1066	1.172	1	0.3033	1.048	1	3.4	0.296	1
0.11	1.166	1	0.3066	1.045	1	3.6	0.277	1
0.1133	1.166	1	0.31	1.042	1	3.8	0.254	1
0.1166	1.166	1	0.3133	1.042	1	4	0.239	1
0.12	1.163	1	0.3166	1.042	1	4.2	0.223	1
0.1233	1.16	1	0.32	1.038	1	4.4	0.207	1
0.1266	1.156	1	0.3233	1.035	1	4.6	0.194	1
0.13	1.153	1	0.3266	1.035	1	4.8	0.178	1
0.1333	1.147	1	0.33	1.035	1	5	0.168	1
0.1366	1.15	1	0.3333	1.032	1	5.2	0.159	1
0.14	1.147	1	0.35	1.019	1	5.4	0.146	1
0.1433	1.147	1	0.3666	1.013	1	5.6	0.137	1
0.1466	1.144	1	0.3833	1.006	1	5.8	0.13	1
0.15	1.137	1	0.4	0.997	1	6	0.118	1
0.1533	1.137	1	0.4166	0.991	1	6.2	0.111	1
0.1566	1.134	1	0.4333	0.981	1	6.4	0.105	1
0.16	1.131	1	0.45	0.971	1	6.6	0.098	1
0.1633	1.124	1	0.4666	0.965	1	6.8	0.092	1
0.1666	1.124	1	0.4833	0.959	1	7	0.086	1
0.17	1.124	1	0.5	0.949	1	7.2	0.079	1
0.1733	1.121	1	0.5166	0.943	1	7.4	0.076	1
0.1766	1.118	1	0.5333	0.933	1	7.6	0.073	1
0.18	1.118	1	0.55	0.93	1	7.8	0.063	1
0.1833	1.115	1	0.5666	0.924	1	8	0.06	1
0.1866	1.109	1	0.5833	0.917	1	8.2	0.057	1
0.19	1.112	1	0.6	0.911	1	8.4	0.054	1
0.1933	1.112	1	0.6166	0.905	1	8.6	0.051	1
0.1966	1.105	1	0.6333	0.895	1	8.8	0.044	1
0.2	1.105	1	0.65	0.889	1	9	0.044	1
0.2033	1.105	1	0.6666	0.886	1	9.2	0.041	1
			0.6833	0.876	1	9.4	0.041	1
			0.7	0.87	1	9.6	0.035	1
						9.8	0.035	1
						10	0.028	1

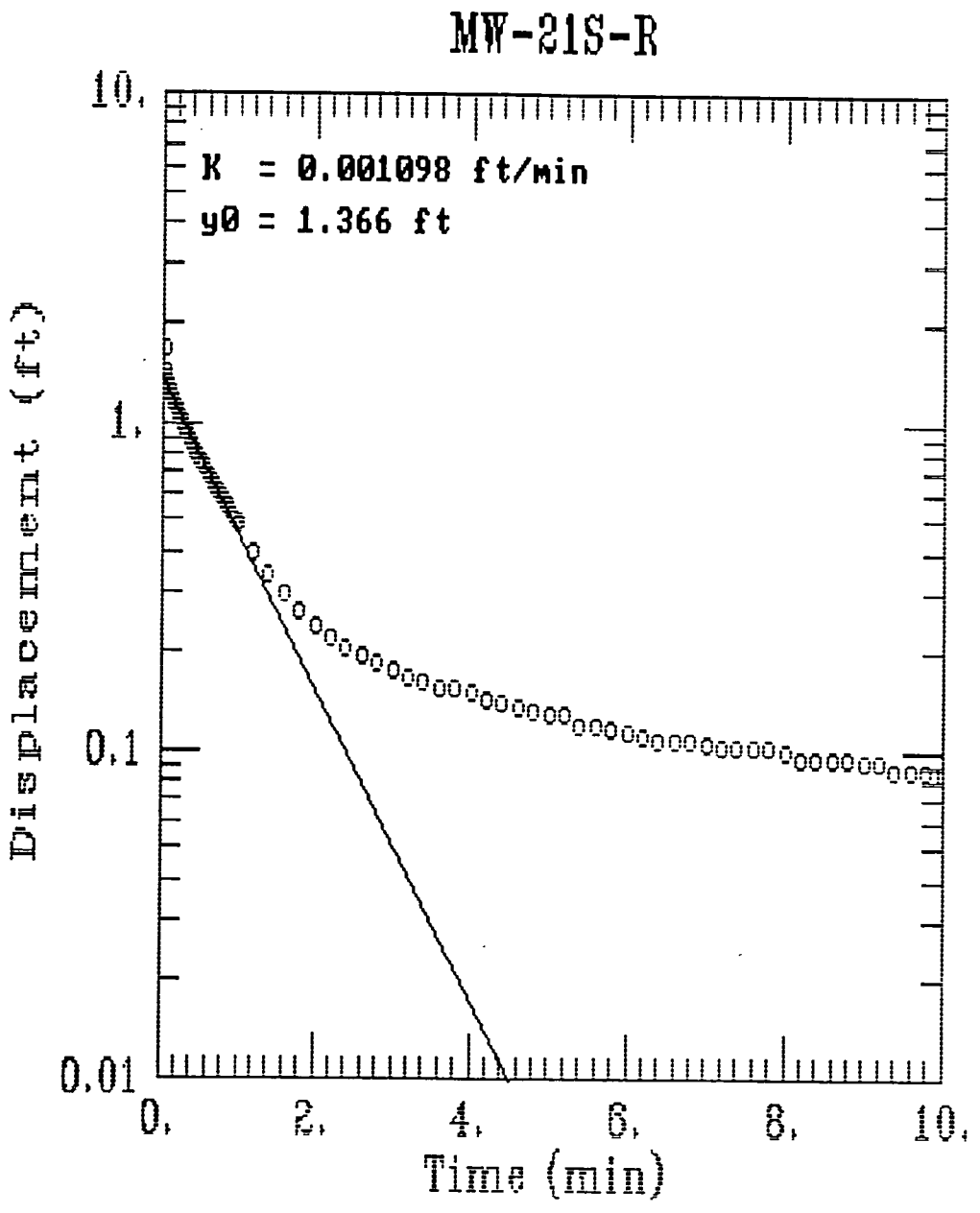
MW-21S-R
K = 0.001098 ft/min
y0 = 1.366 ft
10.
1.
0.1
0.01
Displacement (ft)
0.
2.
4.
6.
8.
10.
Time (min)

SE1000C
Environmental Logger
)4/26 07:32
MW09-21S-R
Unit# 05001 Test 3
Setups: INPUT 1

Type	Level (F)
Mode	TOC
I.D.	00212
Reference	8.930
Linearity	0.040
Scale factor	10.020
Offset	-0.010
Delay mSEC	50.000

Step 2 04/21 09:30:40
Elapsed Time INPUT 1

0.0000	8.841
0.0033	8.834
0.0066	8.802
0.0100	8.984
0.0133	9.549
0.0166	10.470
0.0200	10.543
0.0233	10.620
0.0266	11.131
0.0300	11.048
0.0333	11.487
0.0366	10.699
.0400	9.988
0.0433	10.613
0.0466	10.277
0.0500	10.289
0.0533	10.353
0.0566	10.264
0.0600	10.296
0.0633	10.267
0.0666	10.254
0.0700	10.254
0.0733	10.235
0.0766	10.229
0.0800	10.219
0.0833	10.213
0.0866	10.207
0.0900	10.194
0.0933	10.185
0.0966	10.175
0.1000	10.172
0.1033	10.165
0.1066	10.159
0.1100	10.156
0.1133	10.146
0.1166	10.137
0.1200	10.137
0.1233	10.131
0.1266	10.121
1300	10.115
1333	10.111
0.1366	10.105
0.1400	10.099
0.1433	10.092
0.1466	10.086
0.1500	10.080
0.1533	10.073
0.1566	10.070
0.1600	10.064
0.1633	10.061
0.1666	10.054
0.1700	10.048
0.1733	10.048
0.1766	10.038
0.1800	10.035
0.1833	10.032
0.1866	10.023
0.1900	10.019
0.1933	10.016
0.1966	10.010
0.2000	10.003
0.2033	10.003
0.2066	9.997
0.2100	9.988
0.2133	9.991
0.2166	9.984
0.2200	9.978
0.2233	9.975
0.2266	9.968
0.2300	9.965
0.2333	9.959
0.2366	9.956
0.2400	9.953
0.2433	9.949
0.2466	9.946
0.2500	9.940
0.2533	9.937
0.2566	9.930
0.2600	9.927
0.2633	9.924
0.2666	9.921
0.2700	9.914
0.2733	9.914
0.2766	9.905
0.2800	9.905
0.2833	9.902
0.2866	9.895
0.2900	9.892
0.2933	9.889
0.2966	9.886
0.3000	9.883
0.3033	9.876
0.3066	9.873
0.3100	9.870
0.3133	9.867
0.3166	9.864
0.3200	9.860
0.3233	9.854
0.3266	9.851
0.3300	9.848
0.3333	9.845
0.3500	9.825
0.3666	9.810
0.3833	9.791
0.4000	9.775
0.4166	9.759
0.4333	9.743
0.4500	9.730
0.4666	9.717
0.4833	9.702
0.5000	9.692
0.5166	9.679
0.5333	9.670
0.5500	9.657
0.5666	9.644
0.5833	9.635
0.6000	9.625
0.6166	9.616
0.6333	9.603
0.6500	9.597
0.6666	9.587
0.6833	9.575
0.7000	9.565
0.7166	9.559
0.7333	9.546
0.7500	9.540
0.7666	9.527
0.7833	9.521
0.8000	9.511
0.8166	9.501
0.8333	9.495
0.8500	9.489
0.8666	9.479
0.8833	9.470
0.9000	9.463
0.9166	9.454
0.9333	9.447
0.9500	9.441
0.9666	9.432
0.9833	9.428
1.0000	9.419
1.2000	9.330
1.4000	9.273
1.6000	9.228
1.8000	9.193
2.0000	9.168
2.2000	9.149
2.4000	9.133
2.6000	9.123
2.8000	9.114
3.0000	9.104
3.2000	9.098
3.4000	9.092
3.6000	9.085
3.8000	9.082
4.0000	9.079
4.2000	9.072
4.4000	9.069
4.6000	9.066
4.8000	9.060
5.0000	9.057
5.2000	9.057
5.4000	9.050
5.6000	9.050
5.8000	9.047
6.0000	9.044
6.2000	9.041
6.4000	9.038
6.6000	9.038
6.8000	9.038
7.0000	9.034
7.2000	9.031
7.4000	9.031
7.6000	9.031
7.8000	9.031
8.0000	9.028
8.2000	9.025
8.4000	9.025
8.6000	9.025
8.8000	9.025
9.0000	9.022
9.2000	9.022
9.4000	9.018
9.6000	9.018
9.8000	9.018
10.0000	9.015

DATA USED IN AQESOLV MW09-21S-R

0	-0.089	0	0.2	1.073	1	0.6666	0.657	1
0.0033	-0.096	0	0.2033	1.073	1	0.6833	0.645	1
0.0066	-0.128	0	0.2066	1.067	1	0.7	0.635	1
0.01	0.054	1	0.21	1.058	1	0.7166	0.629	1
0.0133	0.619	1	0.2133	1.061	1	0.7333	0.616	1
0.0166	1.54	1	0.2166	1.054	1	0.75	0.61	1
0.02	1.613	1	0.22	1.048	1	0.7666	0.597	1
0.0233	1.69	1	0.2233	1.045	1	0.7833	0.591	1
0.0266	2.201	1	0.2266	1.038	1	0.8	0.581	1
0.03	2.118	1	0.23	1.035	1	0.8166	0.571	1
0.0333	2.557	1	0.2333	1.029	1	0.8333	0.565	1
0.0366	1.769	1	0.2366	1.026	1	0.85	0.559	1
0.04	1.058	1	0.24	1.023	1	0.8666	0.549	1
0.0433	1.683	1	0.2433	1.019	1	0.8833	0.54	1
0.0466	1.347	1	0.2466	1.016	1	0.9	0.533	1
0.05	1.359	1	0.25	1.01	1	0.9166	0.524	1
0.0533	1.423	1	0.2533	1.007	1	0.9333	0.517	1
0.0566	1.334	1	0.2566	1	1	0.95	0.511	1
0.06	1.366	1	0.26	0.997	1	0.9666	0.502	1
0.0633	1.337	1	0.2633	0.994	1	0.9833	0.498	1
0.0666	1.324	1	0.2666	0.991	1	1	0.489	1
0.07	1.324	1	0.27	0.984	1	1.2	0.4	1
0.0733	1.305	1	0.2733	0.984	1	1.4	0.343	1
0.0766	1.299	1	0.2766	0.975	1	1.6	0.298	1
0.08	1.289	1	0.28	0.975	1	1.8	0.263	1
0.0833	1.283	1	0.2833	0.972	1	2	0.238	1
0.0866	1.277	1	0.2866	0.965	1	2.2	0.219	1
0.09	1.264	1	0.29	0.962	1	2.4	0.203	1
0.0933	1.255	1	0.2933	0.959	1	2.6	0.193	1
0.0966	1.245	1	0.2966	0.956	1	2.8	0.184	1
0.1	1.242	1	0.3	0.953	1	3	0.174	1
0.1033	1.235	1	0.3033	0.946	1	3.2	0.168	1
0.1066	1.229	1	0.3066	0.943	1	3.4	0.162	1
0.11	1.226	1	0.31	0.94	1	3.6	0.155	1
0.1133	1.216	1	0.3133	0.937	1	3.8	0.152	1
0.1166	1.207	1	0.3166	0.934	1	4	0.149	1
0.12	1.207	1	0.32	0.93	1	4.2	0.142	1
0.1233	1.201	1	0.3233	0.924	1	4.4	0.139	1
0.1266	1.191	1	0.3266	0.921	1	4.6	0.136	1
0.13	1.185	1	0.33	0.918	1	4.8	0.13	1
0.1333	1.181	1	0.3333	0.915	1	5	0.127	1
0.1366	1.175	1	0.35	0.895	1	5.2	0.127	1
0.14	1.169	1	0.3666	0.88	1	5.4	0.12	1
0.1433	1.162	1	0.3833	0.861	1	5.6	0.12	1
0.1466	1.156	1	0.4	0.845	1	5.8	0.117	1
0.15	1.15	1	0.4166	0.829	1	6	0.114	1
0.1533	1.143	1	0.4333	0.813	1	6.2	0.111	1
0.1566	1.14	1	0.45	0.8	1	6.4	0.108	1
0.16	1.134	1	0.4666	0.787	1	6.6	0.108	1
0.1633	1.131	1	0.4833	0.772	1	6.8	0.108	1
0.1666	1.124	1	0.5	0.762	1	7	0.104	1
0.17	1.118	1	0.5166	0.749	1	7.2	0.101	1
0.1733	1.118	1	0.5333	0.74	1	7.4	0.101	1
0.1766	1.108	1	0.55	0.727	1	7.6	0.101	1
0.18	1.105	1	0.5666	0.714	1	7.8	0.101	1
0.1833	1.102	1	0.5833	0.705	1	8	0.098	1
0.1866	1.093	1	0.6	0.695	1	8.2	0.095	1
0.19	1.089	1	0.6166	0.686	1	8.4	0.095	1
0.1933	1.086	1	0.6333	0.673	1	8.6	0.095	1
0.1966	1.08	1	0.65	0.667	1	8.8	0.095	1
						9	0.092	1
						9.2	0.092	1
						9.4	0.088	1
						9.6	0.088	1
						9.8	0.088	1
						10	0.085	1

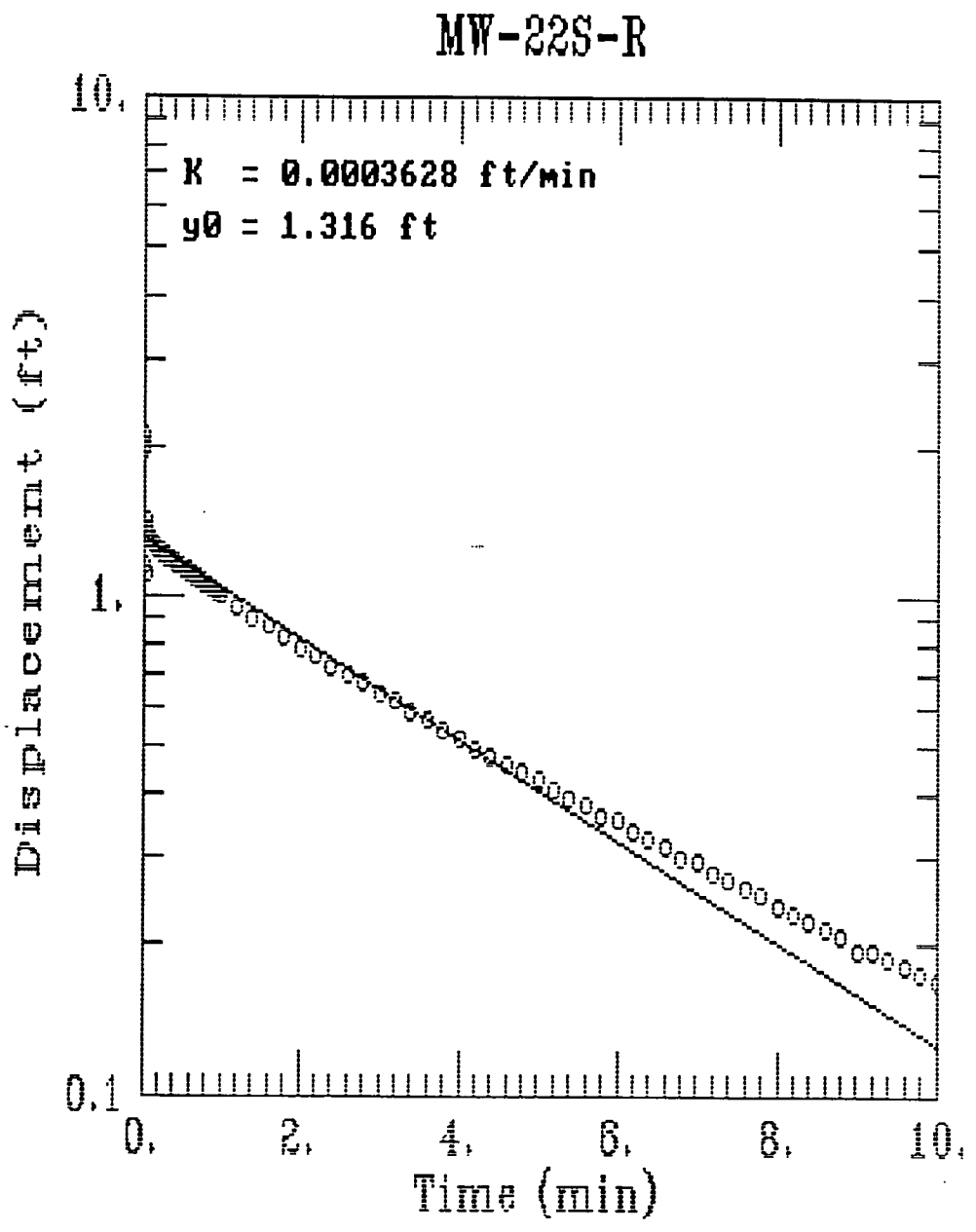
MW-22S-R
K = 0.0003628 ft/min
y0 = 1.316 ft
10.
1.
0.1
Displacement (ft)
0.
2.
4.
6.
8.
10.
Time (min)

SE1000C
Environmental Logger
14/27 18:23
MW09-22S-R
Unit# 05001 Test 9
Setups: INPUT 1

Type	Level (F)
Mode	TOC
I.D.	00222
Reference	2.990
Linearity	0.040
Scale factor	10.020
Offset	-0.010
Delay mSEC	50.000

Step 2 04/24 09:51:17
Elapsed Time INPUT 1

0.0000	2.792
0.0033	2.792
0.0066	2.789
0.0100	3.253
0.0133	4.956
0.0166	5.673
0.0200	5.105
0.0233	4.133
0.0266	4.953
0.0300	4.984
0.0333	4.102
0.0366	4.356
.0400	4.416
.0433	4.302
0.0466	4.359
0.0500	4.330
0.0533	4.317
0.0566	4.330
0.0600	4.298
0.0633	4.305
0.0666	4.311
0.0700	4.295
0.0733	4.295
0.0766	4.292
0.0800	4.286
0.0833	4.286
0.0866	4.283
0.0900	4.283
0.0933	4.279
0.0966	4.279
0.1000	4.273
0.1033	4.270
0.1066	4.267
0.1100	4.267
0.1133	4.267
0.1166	4.264
0.1200	4.260
0.1233	4.264
0.1266	4.260
0.1300	4.260
1333	4.260
1366	4.254

0.1400	4.254	0.3833	4.168	5.8000	3.355
0.1433	4.251	0.4000	4.159	6.0000	3.345
0.1466	4.248	0.4166	4.155	6.2000	3.329
0.1500	4.248	0.4333	4.149	6.4000	3.317
0.1533	4.244	0.4500	4.146	6.6000	3.304
0.1566	4.244	0.4666	4.143	6.8000	3.291
0.1600	4.244	0.4833	4.133	7.0000	3.282
0.1633	4.241	0.5000	4.130	7.2000	3.269
0.1666	4.241	0.5166	4.124	7.4000	3.260
0.1700	4.241	0.5333	4.117	7.6000	3.250
0.1733	4.241	0.5500	4.114	7.8000	3.241
0.1766	4.238	0.5666	4.114	8.0000	3.231
0.1800	4.235	0.5833	4.105	8.2000	3.221
0.1833	4.235	0.6000	4.098	8.4000	3.215
0.1866	4.232	0.6166	4.095	8.6000	3.206
0.1900	4.232	0.6333	4.095	8.8000	3.199
0.1933	4.229	0.6500	4.089	9.0000	3.186
0.1966	4.225	0.6666	4.082	9.2000	3.183
0.2000	4.229	0.6833	4.079	9.4000	3.177
0.2033	4.225	0.7000	4.076	9.6000	3.171
0.2066	4.225	0.7166	4.070	9.8000	3.164
0.2100	4.222	0.7333	4.063	10.0000	3.158
0.2133	4.222	0.7500	4.057		
0.2166	4.222	0.7666	4.054		
0.2200	4.219	0.7833	4.051		
0.2233	4.219	0.8000	4.047		
0.2266	4.219	0.8166	4.044		
0.2300	4.213	0.8333	4.038		
0.2333	4.216	0.8500	4.032		
0.2366	4.216	0.8666	4.028		
0.2400	4.210	0.8833	4.025		
0.2433	4.210	0.9000	4.022		
0.2466	4.206	0.9166	4.016		
0.2500	4.206	0.9333	4.013		
0.2533	4.210	0.9500	4.009		
0.2566	4.206	0.9666	4.003		
0.2600	4.203	0.9833	4.000		
0.2633	4.206	1.0000	3.997		
0.2666	4.203	1.2000	3.943		
0.2700	4.200	1.4000	3.898		
0.2733	4.200	1.6000	3.857		
0.2766	4.200	1.8000	3.816		
0.2800	4.200	2.0000	3.784		
0.2833	4.200	2.2000	3.749		
0.2866	4.197	2.4000	3.717		
0.2900	4.197	2.6000	3.685		
0.2933	4.197	2.8000	3.660		
0.2966	4.194	3.0000	3.628		
0.3000	4.190	3.2000	3.606		
0.3033	4.194	3.4000	3.581		
0.3066	4.190	3.6000	3.555		
0.3100	4.194	3.8000	3.533		
0.3133	4.190	4.0000	3.511		
0.3166	4.184	4.2000	3.488		
0.3200	4.187	4.4000	3.469		
0.3233	4.187	4.6000	3.453		
0.3266	4.184	4.8000	3.434		
0.3300	4.187	5.0000	3.418		
0.3333	4.184	5.2000	3.399		
0.3500	4.175	5.4000	3.383		
0.3666	4.175	5.6000	3.371		

DATA USED IN AQTESOLV MW09-22S-R

0	-0.198	0	0.1966	1.235	1	0.6666	1.092	1
0.0033	-0.198	0	0.2	1.239	1	0.6833	1.089	1
0.0066	-0.201	0	0.2033	1.235	1	0.7	1.086	1
0.01	0.263	1	0.2066	1.235	1	0.7166	1.08	1
0.0133	1.966	1	0.21	1.232	1	0.7333	1.073	1
0.0166	2.683	1	0.2133	1.232	1	0.75	1.067	1
0.02	2.115	1	0.2166	1.232	1	0.7666	1.064	1
0.0233	1.143	1	0.22	1.229	1	0.7833	1.061	1
0.0266	1.963	1	0.2233	1.229	1	0.8	1.057	1
0.03	1.994	1	0.2266	1.229	1	0.8166	1.054	1
0.0333	1.112	1	0.23	1.223	1	0.8333	1.048	1
0.0366	1.366	1	0.2333	1.226	1	0.85	1.042	1
0.04	1.426	1	0.2366	1.226	1	0.8666	1.038	1
0.0433	1.312	1	0.24	1.22	1	0.8833	1.035	1
0.0466	1.369	1	0.2433	1.22	1	0.9	1.032	1
0.05	1.34	1	0.2466	1.216	1	0.9166	1.026	1
0.0533	1.327	1	0.25	1.216	1	0.9333	1.023	1
0.0566	1.34	1	0.2533	1.22	1	0.95	1.019	1
0.06	1.308	1	0.2566	1.216	1	0.9666	1.013	1
0.0633	1.315	1	0.26	1.213	1	0.9833	1.01	1
0.0666	1.321	1	0.2633	1.216	1	1	1.007	1
0.07	1.305	1	0.2666	1.213	1	1.2	0.953	1
0.0733	1.305	1	0.27	1.21	1	1.4	0.908	1
0.0766	1.302	1	0.2733	1.21	1	1.6	0.867	1
0.08	1.296	1	0.2766	1.21	1	1.8	0.826	1
0.0833	1.296	1	0.28	1.21	1	2	0.794	1
0.0866	1.293	1	0.2833	1.21	1	2.2	0.759	1
0.09	1.293	1	0.2866	1.207	1	2.4	0.727	1
0.0933	1.289	1	0.29	1.207	1	2.6	0.695	1
0.0966	1.289	1	0.2933	1.207	1	2.8	0.67	1
0.1	1.283	1	0.2966	1.204	1	3	0.638	1
0.1033	1.28	1	0.3	1.2	1	3.2	0.616	1
0.1066	1.277	1	0.3033	1.204	1	3.4	0.591	1
0.11	1.277	1	0.3066	1.2	1	3.6	0.565	1
0.1133	1.277	1	0.31	1.204	1	3.8	0.543	1
0.1166	1.274	1	0.3133	1.2	1	4	0.521	1
0.12	1.27	1	0.3166	1.194	1	4.2	0.498	1
0.1233	1.274	1	0.32	1.197	1	4.4	0.479	1
0.1266	1.27	1	0.3233	1.197	1	4.6	0.463	1
0.13	1.27	1	0.3266	1.194	1	4.8	0.444	1
0.1333	1.27	1	0.33	1.197	1	5	0.428	1
0.1366	1.264	1	0.3333	1.194	1	5.2	0.409	1
0.14	1.264	1	0.35	1.185	1	5.4	0.393	1
0.1433	1.261	1	0.3666	1.185	1	5.6	0.381	1
0.1466	1.258	1	0.3833	1.178	1	5.8	0.365	1
0.15	1.258	1	0.4	1.169	1	6	0.355	1
0.1533	1.254	1	0.4166	1.165	1	6.2	0.339	1
0.1566	1.254	1	0.4333	1.159	1	6.4	0.327	1
0.16	1.254	1	0.45	1.156	1	6.6	0.314	1
0.1633	1.251	1	0.4666	1.153	1	6.8	0.301	1
0.1666	1.251	1	0.4833	1.143	1	7	0.292	1
0.17	1.251	1	0.5	1.14	1	7.2	0.279	1
0.1733	1.251	1	0.5166	1.134	1	7.4	0.27	1
0.1766	1.248	1	0.5333	1.127	1	7.6	0.26	1
0.18	1.245	1	0.55	1.124	1	7.8	0.251	1
0.1833	1.245	1	0.5666	1.124	1	8	0.241	1
0.1866	1.242	1	0.5833	1.115	1	8.2	0.231	1
0.19	1.242	1	0.6	1.108	1	8.4	0.225	1
0.1933	1.239	1	0.6166	1.105	1	8.6	0.216	1
			0.6333	1.105	1	8.8	0.209	1
			0.65	1.099	1	9	0.196	1
						9.2	0.193	1
						9.4	0.187	1
						9.6	0.181	1
						9.8	0.174	1
						10	0.168	1

MW-20S-R

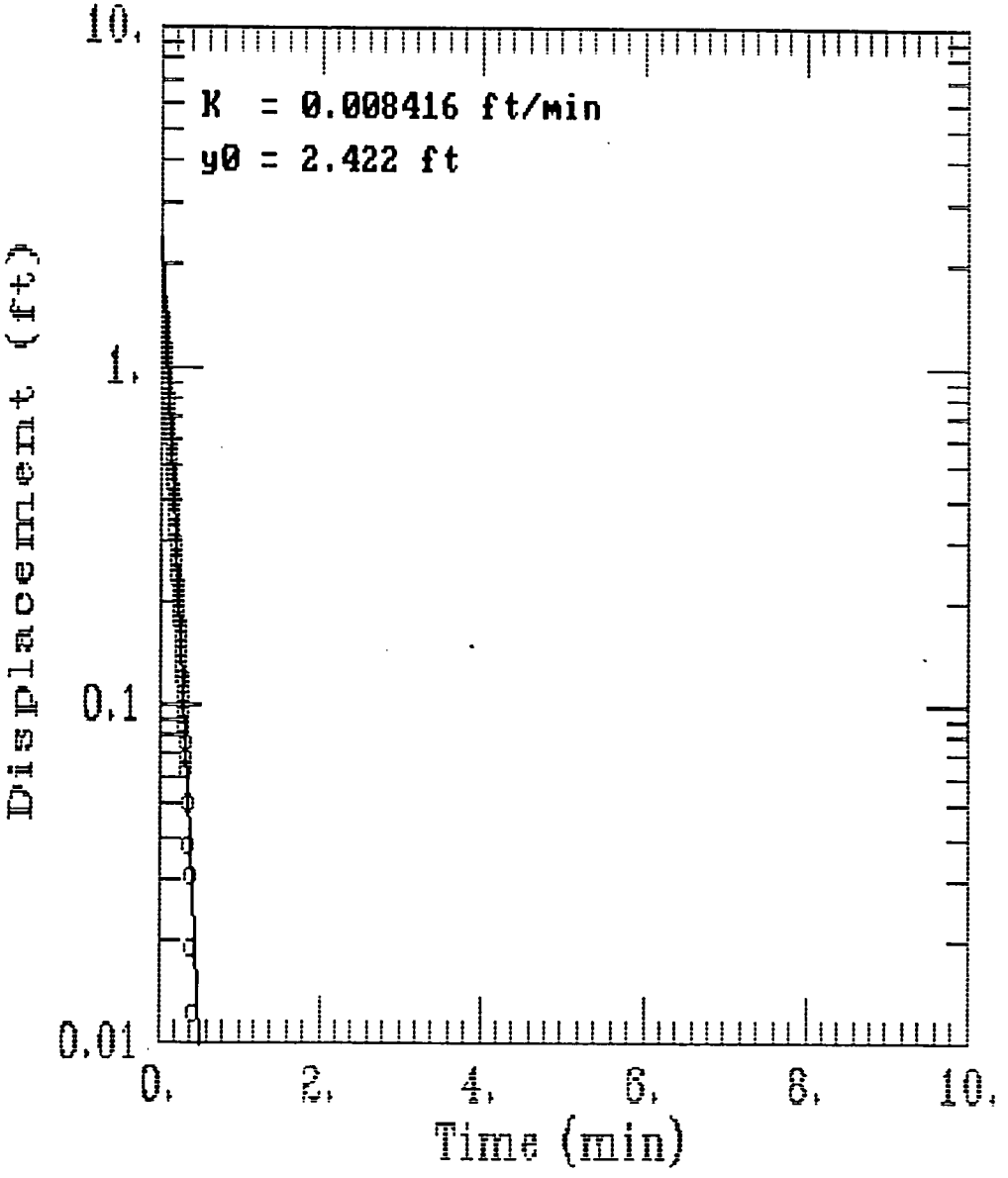
K = 0.008416 ft/min
y0 = 2.422 ft
10.
1.
0.1
0.01
Displacement (ft)
0.
2.
4.
6.
8.
10.
Time (min)

SE1000C
Environmental Logger
05/02 09:03
MW09-20S-R
Unit# 05014 Test 7
INPUT 1: Level (F) TOC
Reference 15.870
Linearity 0.120
Scale factor 20.010
Offset -0.130
Delay mSEC 50.000
Step 2 04/24 17:05:53
Elapsed Time INPUT 1

0.0000	15.584
0.0033	15.578
0.0066	15.578
0.0100	15.578
0.0133	15.578
0.0166	15.578
0.0200	17.169
0.0233	17.397
0.0266	17.314
0.0300	17.289
0.0333	17.245
0.0366	17.219
0.0400	17.194
0.0433	17.169
0.0466	17.150
0.0500	17.118
0.0533	17.092
0.0566	17.067
0.0600	17.035
0.0633	16.991
0.0666	16.959
0.0700	16.928
0.0733	16.896
0.0766	16.864
0.0800	16.833
0.0833	16.801
0.0866	16.769
0.0900	16.738
0.0933	16.712
0.0966	16.687
0.1000	16.655
0.1033	16.630
0.1066	16.605
0.1100	16.579
0.1133	16.554
0.1166	16.529
0.1200	16.510
0.1233	16.484
0.1266	16.465
0.1300	16.440
0.1333	16.421
0.1366	16.402
0.1400	16.383
0.1433	16.364
0.1466	16.345
0.1500	16.332
0.1533	16.313
0.1566	16.300
0.1600	16.281
0.1633	16.269
0.1666	16.256
0.1700	16.243
0.1733	16.231
0.1766	16.218
0.1800	16.205
0.1833	16.199
0.1866	16.186
0.1900	16.174
0.1933	16.161
0.1966	16.155
0.2000	16.142
0.2033	16.136
0.2066	16.129
0.2100	16.117
0.2133	16.110
0.2166	16.104
0.2200	16.098
0.2233	16.091
0.2266	16.085
0.2300	16.079
0.2333	16.072
0.2366	16.066
0.2400	16.060
0.2433	16.053
0.2466	16.047
0.2500	16.041
0.2533	16.034
0.2566	16.034
0.2600	16.022
0.2633	16.015
0.2666	16.015
0.2700	16.009
0.2733	16.003
0.2766	15.996
0.2800	15.990
0.2833	15.990
0.2866	15.984
0.2900	15.977
0.2933	15.971
0.2966	15.971
0.3000	15.965
0.3033	15.958
0.3066	15.958
0.3100	15.952
0.3133	15.946
0.3166	15.946
0.3200	15.946
0.3233	15.939
0.3266	15.939
0.3300	15.933
0.3333	15.933
0.3500	15.920
0.3666	15.908
0.3833	15.901
0.4000	15.889
0.4166	15.882
0.4333	15.882
0.4500	15.876
0.4666	15.870
0.4833	15.863
0.5000	15.863
0.5166	15.863
0.5333	15.863
0.5500	15.857
0.5666	15.857
0.5833	15.857
0.6000	15.857
0.6166	15.857
0.6333	15.857
0.6500	15.857
0.6666	15.857
0.6833	15.851
0.7000	15.851
0.7166	15.851
0.7333	15.851
0.7500	15.851
0.7666	15.851
0.7833	15.851
0.8000	15.851
0.8166	15.851
0.8333	15.851
0.8500	15.851
0.8666	15.851
0.8833	15.851
0.9000	15.851
0.9166	15.844
0.9333	15.851
0.9500	15.851
0.9666	15.851
0.9833	15.851
1.0000	15.851
1.2000	15.844
1.4000	15.844
1.6000	15.844
1.8000	15.844
2.0000	15.844
2.2000	15.844
2.4000	15.844
2.6000	15.844
2.8000	15.844
3.0000	15.844
3.2000	15.838
3.4000	15.838
3.6000	15.844
3.8000	15.838
4.0000	15.838
4.2000	15.838
4.4000	15.838
4.6000	15.838
4.8000	15.838
5.0000	15.838
5.2000	15.838
5.4000	15.838
5.6000	15.838
5.8000	15.838
6.0000	15.838
6.2000	15.838
6.4000	15.838
6.6000	15.832
6.8000	15.832
7.0000	15.838
7.2000	15.838
7.4000	15.838
7.6000	15.838
7.8000	15.832
8.0000	15.832
8.2000	15.832
8.4000	15.832
8.6000	15.832
8.8000	15.838
9.0000	15.838
9.2000	15.838
9.4000	15.832
9.6000	15.832
9.8000	15.832
10.0000	15.832

DATA USED IN AQTESOLV MW09-20S-R

0	-0.286	0	0.2	0.272	1	0.6666	-0.013	0
0.0033	-0.292	0	0.2033	0.266	1	0.6833	-0.019	0
0.0066	-0.292	0	0.2066	0.259	1	0.7	-0.019	0
0.01	-0.292	0	0.21	0.247	1	0.7166	-0.019	0
0.0133	-0.292	0	0.2133	0.24	1	0.7333	-0.019	0
0.0166	-0.292	0	0.2166	0.234	1	0.75	-0.019	0
0.02	1.299	1	0.22	0.228	1	0.7666	-0.019	0
0.0233	1.527	1	0.2233	0.221	1	0.7833	-0.019	0
0.0266	1.444	1	0.2266	0.215	1	0.8	-0.019	0
0.03	1.419	1	0.23	0.209	1	0.8166	-0.019	0
0.0333	1.375	1	0.2333	0.202	1	0.8333	-0.019	0
0.0366	1.349	1	0.2366	0.196	1	0.85	-0.019	0
0.04	1.324	1	0.24	0.19	1	0.8666	-0.019	0
0.0433	1.299	1	0.2433	0.183	1	0.8833	-0.019	0
0.0466	1.28	1	0.2466	0.177	1	0.9	-0.019	0
0.05	1.248	1	0.25	0.171	1	0.9166	-0.026	0
0.0533	1.222	1	0.2533	0.164	1	0.9333	-0.019	0
0.0566	1.197	1	0.2566	0.164	1	0.95	-0.019	0
0.06	1.165	1	0.26	0.152	1	0.9666	-0.019	0
0.0633	1.121	1	0.2633	0.145	1	0.9833	-0.019	0
0.0666	1.089	1	0.2666	0.145	1	1	-0.019	0
0.07	1.058	1	0.27	0.139	1	1.2	-0.026	0
0.0733	1.026	1	0.2733	0.133	1	1.4	-0.026	0
0.0766	0.994	1	0.2766	0.126	1	1.6	-0.026	0
0.08	0.963	1	0.28	0.12	1	1.8	-0.026	0
0.0833	0.931	1	0.2833	0.12	1	2	-0.026	0
0.0866	0.899	1	0.2866	0.114	1	2.2	-0.026	0
0.09	0.868	1	0.29	0.107	1	2.4	-0.026	0
0.0933	0.842	1	0.2933	0.101	1	2.6	-0.026	0
0.0966	0.817	1	0.2966	0.101	1	2.8	-0.026	0
0.1	0.785	1	0.3	0.095	1	3	-0.026	0
0.1033	0.76	1	0.3033	0.088	1	3.2	-0.032	0
0.1066	0.735	1	0.3066	0.088	1	3.4	-0.032	0
0.11	0.709	1	0.31	0.082	1	3.6	-0.026	0
0.1133	0.684	1	0.3133	0.076	1	3.8	-0.032	0
0.1166	0.659	1	0.3166	0.076	1	4	-0.032	0
0.12	0.64	1	0.32	0.076	1	4.2	-0.032	0
0.1233	0.614	1	0.3233	0.069	1	4.4	-0.032	0
0.1266	0.595	1	0.3266	0.069	1	4.6	-0.032	0
0.13	0.57	1	0.33	0.063	1	4.8	-0.032	0
0.1333	0.551	1	0.3333	0.063	1	5	-0.032	0
0.1366	0.532	1	0.35	0.05	1	5.2	-0.032	0
0.14	0.513	1	0.3666	0.038	1	5.4	-0.032	0
0.1433	0.494	1	0.3833	0.031	1	5.6	-0.032	0
0.1466	0.475	1	0.4	0.019	1	5.8	-0.032	0
0.15	0.462	1	0.4166	0.012	1	6	-0.032	0
0.1533	0.443	1	0.4333	0.012	1	6.2	-0.032	0
0.1566	0.43	1	0.45	0.006	1	6.4	-0.032	0
0.16	0.411	1	0.4666	0	1	6.6	-0.038	0
0.1633	0.399	1	0.4833	-0.007	0	6.8	-0.038	0
0.1666	0.386	1	0.5	-0.007	0	7	-0.032	0
0.17	0.373	1	0.5166	-0.007	0	7.2	-0.032	0
0.1733	0.361	1	0.5333	-0.007	0	7.4	-0.032	0
0.1766	0.348	1	0.55	-0.013	0	7.6	-0.032	0
0.18	0.335	1	0.5666	-0.013	0	7.8	-0.038	0
0.1833	0.329	1	0.5833	-0.013	0	8	-0.038	0
0.1866	0.316	1	0.6	-0.013	0	8.2	-0.038	0
0.19	0.304	1	0.6166	-0.013	0	8.4	-0.038	0
0.1933	0.291	1	0.6333	-0.013	0	8.6	-0.038	0
0.1966	0.285	1	0.65	-0.013	0	8.8	-0.032	0
						9	-0.032	0
						9.2	-0.032	0
						9.4	-0.038	0
						9.6	-0.038	0
						9.8	-0.038	0
						10	-0.038	0

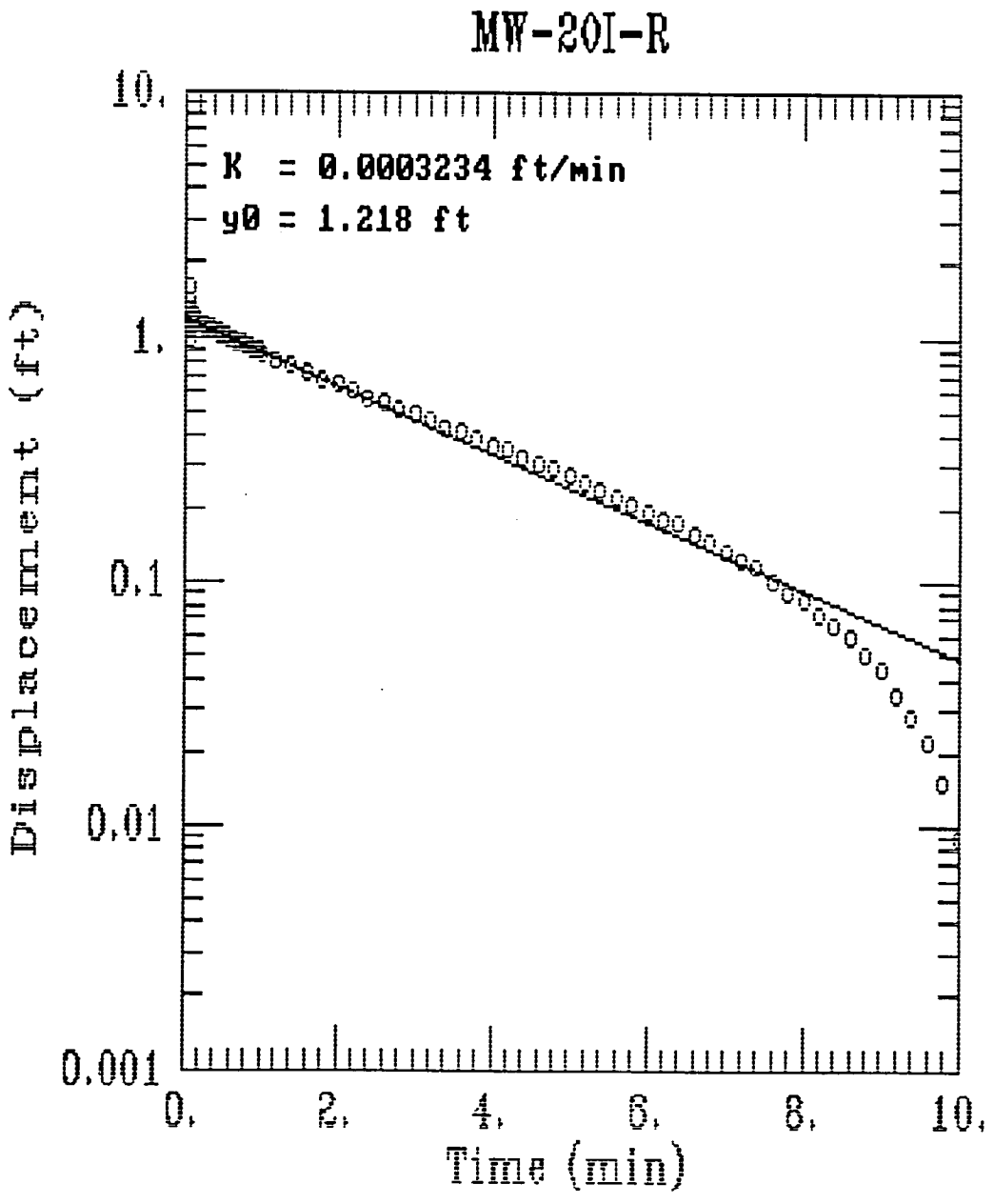
MW-20I-R
K = 0.0003234 ft/min
y0 = 1.218 ft
10.
1.
0.1
0.01
0.001
Displacement (ft)
0.
2.
4.
6.
8.
10.
Time (min)

SE1000C
Environmental Logger
04/27 19:06
MW09-20I-R
Unit# 05001 Test 14
Setups: INPUT 1

Type	Level (F)
Mode	TOC
I.D.	00203
Reference	15.180
Linearity	0.040
Scale factor	10.020
Offset	-0.010
Delay mSEC	50.000

Step 2 04/24 16:45:33
Elapsed Time INPUT 1

0.0000	14.959
0.0033	14.959
0.0066	14.956
0.0100	14.953
0.0133	15.486
0.0166	17.181
0.0200	18.188
0.0233	17.809
0.0266	16.515
0.0300	17.223
0.0333	17.519
0.0366	16.270
.0400	15.568
0.0433	15.973
0.0466	16.764
0.0500	17.465
0.0533	16.028
0.0566	15.390
0.0600	15.820
0.0633	16.773
0.0666	16.799
0.0700	16.302
0.0733	16.171
0.0766	16.554
0.0800	16.560
0.0833	16.273
0.0866	16.318
0.0900	16.493
0.0933	16.410
0.0966	16.298
0.1000	16.375
0.1033	16.426
0.1066	16.349
0.1100	16.337
0.1133	16.388
0.1166	16.372
0.1200	16.330
0.1233	16.343
0.1266	16.359
1300	16.337
1333	16.324
0.1366	16.340
0.1400	16.340
0.1433	16.327
0.1466	16.327
0.1500	16.334
0.1533	16.330
0.1566	16.324
0.1600	16.324
0.1633	16.330
0.1666	16.327
0.1700	16.324
0.1733	16.324
0.1766	16.327
0.1800	16.324
0.1833	16.321
0.1866	16.321
0.1900	16.321
0.1933	16.318
0.1966	16.318
0.2000	16.314
0.2033	16.311
0.2066	16.311
0.2100	16.311
0.2133	16.308
0.2166	16.308
0.2200	16.308
0.2233	16.305
0.2266	16.305
0.2300	16.305
0.2333	16.302
0.2366	16.302
0.2400	16.298
0.2433	16.298
0.2466	16.292
0.2500	16.295
0.2533	16.292
0.2566	16.292
0.2600	16.292
0.2633	16.289
0.2666	16.286
0.2700	16.286
0.2733	16.286
0.2766	16.283
0.2800	16.283
0.2833	16.279
0.2866	16.279
0.2900	16.279
0.2933	16.279
0.2966	16.276
0.3000	16.276
0.3033	16.273
0.3066	16.273
0.3100	16.270
0.3133	16.270
0.3166	16.267
0.3200	16.267
0.3233	16.267
0.3266	16.267
0.3300	16.263
0.3333	16.263
0.3500	16.254
0.3666	16.247
0.3833	16.241
0.4000	16.235
0.4166	16.228
0.4333	16.222
0.4500	16.216
0.4666	16.209
0.4833	16.203
0.5000	16.200
0.5166	16.193
0.5333	16.187
0.5500	16.181
0.5666	16.177
0.5833	16.168
0.6000	16.168
0.6166	16.161
0.6333	16.155
0.6500	16.149
0.6666	16.142
0.6833	16.139
0.7000	16.133
0.7166	16.130
0.7333	16.123
0.7500	16.120
0.7666	16.114
0.7833	16.110
0.8000	16.104
0.8166	16.101
0.8333	16.098
0.8500	16.091
0.8666	16.085
0.8833	16.079
0.9000	16.079
0.9166	16.072
0.9333	16.066
0.9500	16.063
0.9666	16.059
0.9833	16.056
1.0000	16.050
1.2000	15.989
1.4000	15.941
1.6000	15.900
1.8000	15.859
2.0000	15.823
2.2000	15.788
2.4000	15.753
2.6000	15.725
2.8000	15.693
3.0000	15.667
3.2000	15.639
3.4000	15.616
3.6000	15.591
3.8000	15.568
4.0000	15.546
4.2000	15.524
4.4000	15.505
4.6000	15.489
4.8000	15.470
5.0000	15.451
5.2000	15.435
5.4000	15.419
5.6000	15.403
5.8000	15.390
6.0000	15.377
6.2000	15.364
6.4000	15.352
6.6000	15.339
6.8000	15.326
7.0000	15.313
7.2000	15.304
7.4000	15.294
7.6000	15.282
7.8000	15.272
8.0000	15.266
8.2000	15.253
8.4000	15.246
8.6000	15.240
8.8000	15.231
9.0000	15.224
9.2000	15.215
9.4000	15.208
9.6000	15.202
9.8000	15.195
10.0000	15.189
12.0000	15.135

DATA USED IN AQTESOLV MW09-20I-R

0	-0.221	0	0.2	1.134	1	0.6833	0.959	1
0.0033	-0.221	0	0.2033	1.131	1	0.7	0.953	1
0.0066	-0.224	0	0.2066	1.131	1	0.7166	0.95	1
0.01	-0.227	0	0.21	1.131	1	0.7333	0.943	1
0.0133	0.306	1	0.2133	1.128	1	0.75	0.94	1
0.0166	2.001	1	0.2166	1.128	1	0.7666	0.934	1
0.02	3.008	1	0.22	1.128	1	0.7833	0.93	1
0.0233	2.629	1	0.2233	1.125	1	0.8	0.924	1
0.0266	1.335	1	0.2266	1.125	1	0.8166	0.921	1
0.03	2.043	1	0.23	1.125	1	0.8333	0.918	1
0.0333	2.339	1	0.2333	1.122	1	0.85	0.911	1
0.0366	1.09	1	0.2366	1.122	1	0.8666	0.905	1
0.04	0.388	1	0.24	1.118	1	0.8833	0.899	1
0.0433	0.793	1	0.2433	1.118	1	0.9	0.899	1
0.0466	1.584	1	0.2466	1.112	1	0.9166	0.892	1
0.05	2.285	1	0.25	1.115	1	0.9333	0.886	1
0.0533	0.848	1	0.2533	1.112	1	0.95	0.883	1
0.0566	0.21	1	0.2566	1.112	1	0.9666	0.879	1
0.06	0.64	1	0.26	1.112	1	0.9833	0.876	1
0.0633	1.593	1	0.2633	1.109	1	1	0.87	1
0.0666	1.619	1	0.2666	1.106	1	1.2	0.809	1
0.07	1.122	1	0.27	1.106	1	1.4	0.761	1
0.0733	0.991	1	0.2733	1.106	1	1.6	0.72	1
0.0766	1.374	1	0.2766	1.103	1	1.8	0.679	1
0.08	1.38	1	0.28	1.103	1	2	0.643	1
0.0833	1.093	1	0.2833	1.099	1	2.2	0.608	1
0.0866	1.138	1	0.2866	1.099	1	2.4	0.573	1
0.09	1.313	1	0.29	1.099	1	2.6	0.545	1
0.0933	1.23	1	0.2933	1.099	1	2.8	0.513	1
0.0966	1.118	1	0.2966	1.096	1	3	0.487	1
0.1	1.195	1	0.3	1.096	1	3.2	0.459	1
0.1033	1.246	1	0.3033	1.093	1	3.4	0.436	1
0.1066	1.169	1	0.3066	1.093	1	3.6	0.411	1
0.11	1.157	1	0.31	1.09	1	3.8	0.388	1
0.1133	1.208	1	0.3133	1.09	1	4	0.366	1
0.1166	1.192	1	0.3166	1.087	1	4.2	0.344	1
0.12	1.15	1	0.32	1.087	1	4.4	0.325	1
0.1233	1.163	1	0.3233	1.087	1	4.6	0.309	1
0.1266	1.179	1	0.3266	1.087	1	4.8	0.29	1
0.13	1.157	1	0.33	1.083	1	5	0.271	1
0.1333	1.144	1	0.3333	1.083	1	5.2	0.255	1
0.1366	1.16	1	0.35	1.074	1	5.4	0.239	1
0.14	1.16	1	0.3666	1.067	1	5.6	0.223	1
0.1433	1.147	1	0.3833	1.061	1	5.8	0.21	1
0.1466	1.147	1	0.4	1.055	1	6	0.197	1
0.15	1.154	1	0.4166	1.048	1	6.2	0.184	1
0.1533	1.15	1	0.4333	1.042	1	6.4	0.172	1
0.1566	1.144	1	0.45	1.036	1	6.6	0.159	1
0.16	1.144	1	0.4666	1.029	1	6.8	0.146	1
0.1633	1.15	1	0.4833	1.023	1	7	0.133	1
0.1666	1.147	1	0.5	1.02	1	7.2	0.124	1
0.17	1.144	1	0.5166	1.013	1	7.4	0.114	1
0.1733	1.144	1	0.5333	1.007	1	7.6	0.102	1
0.1766	1.147	1	0.55	1.001	1	7.8	0.092	1
0.18	1.144	1	0.5666	0.997	1	8	0.086	1
0.1833	1.141	1	0.5833	0.988	1	8.2	0.073	1
0.1866	1.141	1	0.6	0.988	1	8.4	0.066	1
0.19	1.141	1	0.6166	0.981	1	8.6	0.06	1
0.1933	1.138	1	0.6333	0.975	1	8.8	0.051	1
0.1966	1.138	1	0.65	0.969	1	9	0.044	1
			0.6666	0.962	1	9.2	0.035	1
						9.4	0.028	1
						9.6	0.022	1
						9.8	0.015	1
						10	0.009	1
						12	-0.045	0

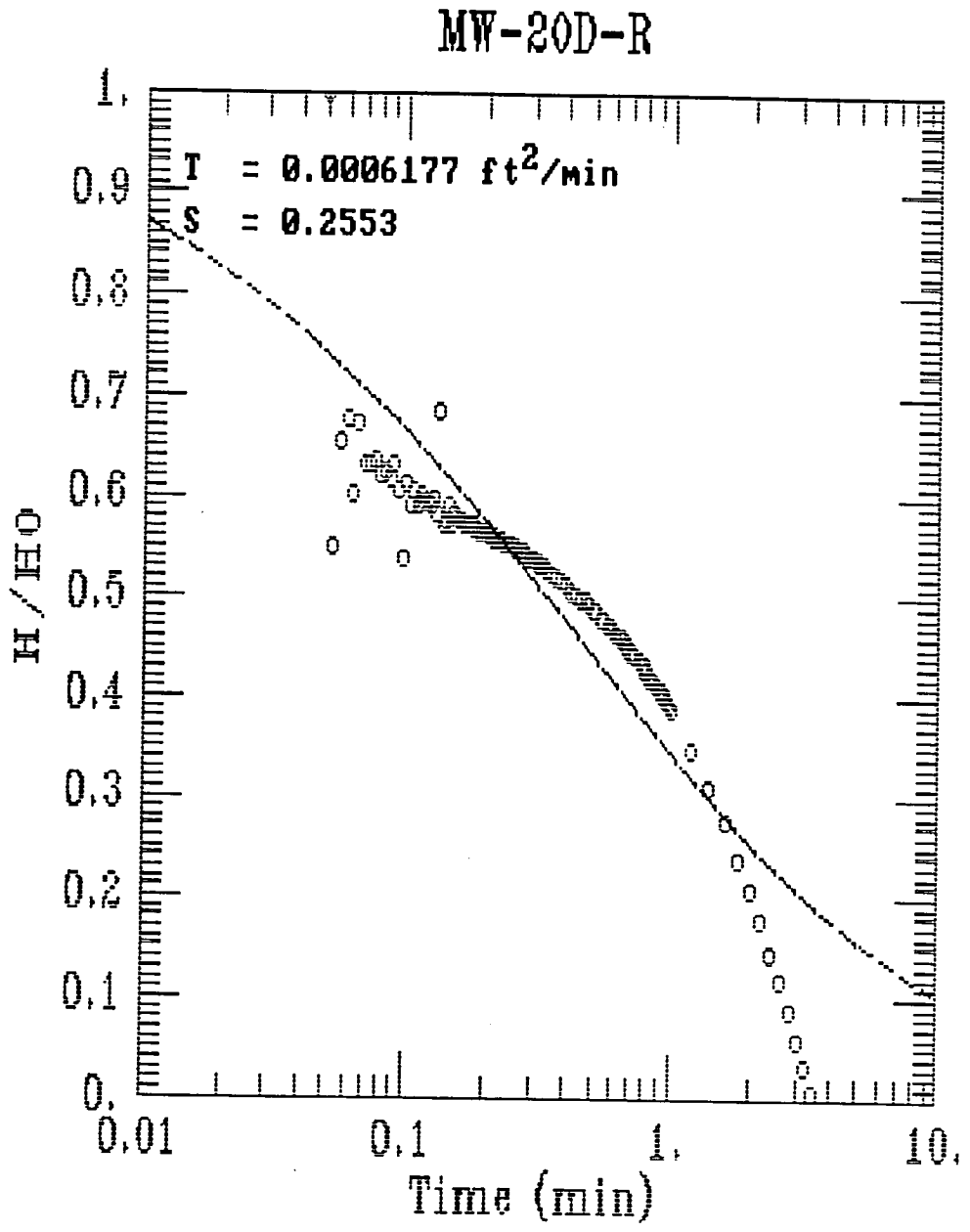
MW-20D-R
T = 0.0006177 ft²/min
S = 0.2553
H/H0
Time (min)
1.
0.9
0.8
0.7
0.6
0.5
0.4
0.3
0.2
0.1
0.
0.01
0.1
1.
10.

SE1000C
Environmental Logger
MW09-20D-R
04/27 18:57
Unit# 05001 Test 13
Setups: INPUT 1

Type	Level (F)
Mode	TOC
I.D.	00201
Reference	16.250
Linearity	0.040
Scale factor	10.020
Offset	-0.010
Delay mSEC	50.000

Step 2 04/24 15:34:28
Elapsed Time INPUT 1

0.0000	15.059
0.0033	19.242
0.0066	23.990
0.0100	21.499
0.0133	20.827
0.0166	20.960
0.0200	21.639
0.0233	19.191
0.0266	23.318
0.0300	20.498
0.0333	22.002
0.0366	18.438
0.0400	19.255
0.0433	18.595
0.0466	16.339
0.0500	17.580
0.0533	16.981
0.0566	17.118
0.0600	17.150
0.0633	17.051
0.0666	17.143
0.0700	17.089
0.0733	17.089
0.0766	17.095
0.0800	17.073
0.0833	17.079
0.0866	17.070
0.0900	17.092
0.0933	17.057
0.0966	16.968
0.1000	17.063
0.1033	17.035
0.1066	17.057
0.1100	17.035
0.1133	17.051
0.1166	17.041
0.1200	17.041
0.1233	17.035
0.1266	17.044
.1300	17.025
.1333	17.159
0.1366	17.009
0.1400	17.016
0.1433	17.038
0.1466	17.012
0.1500	17.025
0.1533	17.019
0.1566	17.016
0.1600	17.016
0.1633	17.012
0.1666	17.012
0.1700	17.012
0.1733	17.009
0.1766	17.009
0.1800	17.006
0.1833	17.006
0.1866	17.003
0.1900	17.003
0.1933	17.003
0.1966	17.000
0.2000	17.000
0.2033	16.996
0.2066	16.996
0.2100	16.996
0.2133	16.993
0.2166	16.993
0.2200	16.990
0.2233	16.990
0.2266	16.990
0.2300	16.987
0.2333	16.987
0.2366	16.987
0.2400	16.984
0.2433	16.984
0.2466	16.984
0.2500	16.981
0.2533	16.981
0.2566	16.981
0.2600	16.977
0.2633	16.977
0.2666	16.974
0.2700	16.974
0.2733	16.974
0.2766	16.971
0.2800	16.971
0.2833	16.968
0.2866	16.968
0.2900	16.968
0.2933	16.965
0.2966	16.965
0.3000	16.965
0.3033	16.961
0.3066	16.961
0.3100	16.961
0.3133	16.958
0.3166	16.958
0.3200	16.958
0.3233	16.955
0.3266	16.955
0.3300	16.955
0.3333	16.952
0.3500	16.945
0.3666	16.939
0.3833	16.936
0.4000	16.929
0.4166	16.923
0.4333	16.917
0.4500	16.913
0.4666	16.910
0.4833	16.904
0.5000	16.897
0.5166	16.894
0.5333	16.888
0.5500	16.885
0.5666	16.878
0.5833	16.875
0.6000	16.872
0.6166	16.866
0.6333	16.862
0.6500	16.859
0.6666	16.853
0.6833	16.850
0.7000	16.843
0.7166	16.840
0.7333	16.837
0.7500	16.830
0.7666	16.827
0.7833	16.824
0.8000	16.818
0.8166	16.815
0.8333	16.808
0.8500	16.805
0.8666	16.802
0.8833	16.795
0.9000	16.792
0.9166	16.789
0.9333	16.786
0.9500	16.779
0.9666	16.776
0.9833	16.773
1.0000	16.767
1.2000	16.709
1.4000	16.661
1.6000	16.617
1.8000	16.569
2.0000	16.527
2.2000	16.486
2.4000	16.444
2.6000	16.406
2.8000	16.368
3.0000	16.329
3.2000	16.291
3.4000	16.256
3.6000	16.224
3.8000	16.189
4.0000	16.157
4.2000	16.125
4.4000	16.096
4.6000	16.068
4.8000	16.039
5.0000	16.010
5.2000	15.981
5.4000	15.956
5.6000	15.930
5.8000	15.905
6.0000	15.883
6.2000	15.857
6.4000	15.835
6.6000	15.812
6.8000	15.793
7.0000	15.771
7.2000	15.752
7.4000	15.732
7.6000	15.710
7.8000	15.694
8.0000	15.675
8.2000	15.659
8.4000	15.640
8.6000	15.624
8.8000	15.608
9.0000	15.592
9.2000	15.576
9.4000	15.560
9.6000	15.547
9.8000	15.531
10.0000	15.519
12.0000	15.400
14.0000	15.314

DATA USED IN AQTESOLV MW09-20D-R

0	-1.191	0	0.1966	0.75	1	0.6833	0.6	1
0.0033	2.992	1	0.2	0.75	1	0.7	0.593	1
0.0066	7.74	1	0.2033	0.746	1	0.7166	0.59	1
0.01	5.249	1	0.2066	0.746	1	0.7333	0.587	1
0.0133	4.577	1	0.21	0.746	1	0.75	0.58	1
0.0166	4.71	1	0.2133	0.743	1	0.7666	0.577	1
0.02	5.389	1	0.2166	0.743	1	0.7833	0.574	1
0.0233	2.941	1	0.22	0.74	1	0.8	0.568	1
0.0266	7.068	1	0.2233	0.74	1	0.8166	0.565	1
0.03	4.248	1	0.2266	0.74	1	0.8333	0.558	1
0.0333	5.752	1	0.23	0.737	1	0.85	0.555	1
0.0366	2.188	1	0.2333	0.737	1	0.8666	0.552	1
0.04	3.005	1	0.2366	0.737	1	0.8833	0.545	1
0.0433	2.345	1	0.24	0.734	1	0.9	0.542	1
0.0466	0.089	1	0.2433	0.734	1	0.9166	0.539	1
0.05	1.33	1	0.2466	0.734	1	0.9333	0.536	1
0.0533	0.731	1	0.25	0.731	1	0.95	0.529	1
0.0566	0.868	1	0.2533	0.731	1	0.9666	0.526	1
0.06	0.9	1	0.2566	0.731	1	0.9833	0.523	1
0.0633	0.801	1	0.26	0.727	1	1	0.517	1
0.0666	0.893	1	0.2633	0.727	1	1.2	0.459	1
0.07	0.839	1	0.2666	0.724	1	1.4	0.411	1
0.0733	0.839	1	0.27	0.724	1	1.6	0.367	1
0.0766	0.845	1	0.2733	0.724	1	1.8	0.319	1
0.08	0.823	1	0.2766	0.721	1	2	0.277	1
0.0833	0.829	1	0.28	0.721	1	2.2	0.236	1
0.0866	0.82	1	0.2833	0.718	1	2.4	0.194	1
0.09	0.842	1	0.2866	0.718	1	2.6	0.156	1
0.0933	0.807	1	0.29	0.718	1	2.8	0.118	1
0.0966	0.718	1	0.2933	0.715	1	3	0.079	1
0.1	0.813	1	0.2966	0.715	1	3.2	0.041	1
0.1033	0.785	1	0.3	0.715	1	3.4	0.006	1
0.1066	0.807	1	0.3033	0.711	1	3.6	-0.026	0
0.11	0.785	1	0.3066	0.711	1	3.8	-0.061	0
0.1133	0.801	1	0.31	0.711	1	4	-0.093	0
0.1166	0.791	1	0.3133	0.708	1	4.2	-0.125	0
0.12	0.791	1	0.3166	0.708	1	4.4	-0.154	0
0.1233	0.785	1	0.32	0.708	1	4.6	-0.182	0
0.1266	0.794	1	0.3233	0.705	1	4.8	-0.211	0
0.13	0.775	1	0.3266	0.705	1	5	-0.24	0
0.1333	0.909	1	0.33	0.705	1	5.2	-0.269	0
0.1366	0.759	1	0.3333	0.702	1	5.4	-0.294	0
0.14	0.766	1	0.35	0.695	1	5.6	-0.32	0
0.1433	0.788	1	0.3666	0.689	1	5.8	-0.345	0
0.1466	0.762	1	0.3833	0.686	1	6	-0.367	0
0.15	0.775	1	0.4	0.679	1	6.2	-0.393	0
0.1533	0.769	1	0.4166	0.673	1	6.4	-0.415	0
0.1566	0.766	1	0.4333	0.667	1	6.6	-0.438	0
0.16	0.766	1	0.45	0.663	1	6.8	-0.457	0
0.1633	0.762	1	0.4666	0.66	1	7	-0.479	0
0.1666	0.762	1	0.4833	0.654	1	7.2	-0.498	0
0.17	0.762	1	0.5	0.647	1	7.4	-0.518	0
0.1733	0.759	1	0.5166	0.644	1	7.6	-0.54	0
0.1766	0.759	1	0.5333	0.638	1	7.8	-0.556	0
0.18	0.756	1	0.55	0.635	1	8	-0.575	0
0.1833	0.756	1	0.5666	0.628	1	8.2	-0.591	0
0.1866	0.753	1	0.5833	0.625	1	8.4	-0.61	0
0.19	0.753	1	0.6	0.622	1	8.6	-0.626	0
0.1933	0.753	1	0.6166	0.616	1	8.8	-0.642	0
			0.6333	0.612	1	9	-0.658	0
			0.65	0.609	1	9.2	-0.674	0
			0.6666	0.603	1	9.4	-0.69	0
						9.6	-0.703	0
						9.8	-0.719	0
						10	-0.731	0
						12	-0.85	0
						14	-0.936	0

MW-21D-R

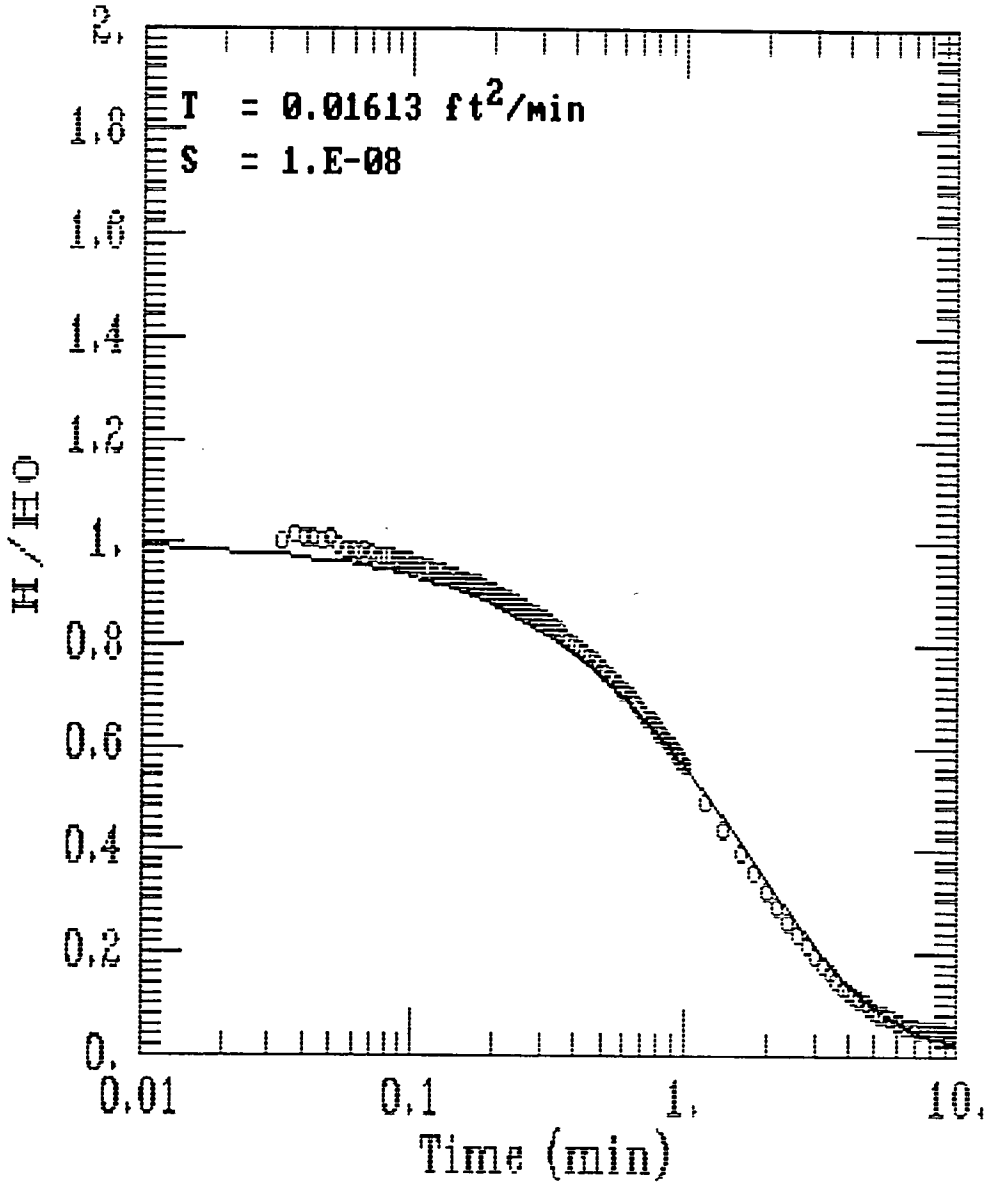
T = 0.01613 ft²/min
S = 1.E-08
H / H0
2.
1.8
1.6
1.4
1.2
1.
0.8
0.6
0.4
0.2
0.
0.01
0.1
1.
10.
Time (min)

SE1000C
Environmental Logger
04/26 07:19
MW09-21D-R
Unit# 05001 Test 2
Setups: INPUT 1

Type	Level (F)
Mode	TOC
I.D.	00211
Reference	10.460
Linearity	0.030
Scale factor	10.070
Offset	-0.100
Delay mSEC	50.000

Step 2 04/20 17:47:03
Elapsed Time INPUT 1

0.0000	10.530
0.0033	10.539
0.0066	12.729
0.0100	12.470
0.0133	13.768
0.0166	14.299
0.0200	12.572
0.0233	12.658
0.0266	13.369
0.0300	12.348
0.0333	12.415
0.0366	12.450
0.0400	12.428
0.0433	12.425
0.0466	12.418
0.0500	12.428
0.0533	12.406
0.0566	12.393
0.0600	12.393
0.0633	12.377
0.0666	12.386
0.0700	12.377
0.0733	12.348
0.0766	12.361
0.0800	12.358
0.0833	12.364
0.0866	12.351
0.0900	12.348
0.0933	12.345
0.0966	12.342
0.1000	12.332
0.1033	12.332
0.1066	12.326
0.1100	12.322
0.1133	12.313
0.1166	12.310
0.1200	12.287
0.1233	12.303
0.1266	12.300
0.1300	12.297
0.1333	12.290
0.1366	12.287
0.1400	12.284
0.1433	12.281
0.1466	12.278
0.1500	12.274
0.1533	12.271
0.1566	12.265
0.1600	12.261
0.1633	12.258
0.1666	12.255
0.1700	12.252
0.1733	12.249
0.1766	12.246
0.1800	12.242
0.1833	12.236
0.1866	12.233
0.1900	12.230
0.1933	12.230
0.1966	12.223
0.2000	12.220
0.2033	12.217
0.2066	12.213
0.2100	12.210
0.2133	12.207
0.2166	12.204
0.2200	12.201
0.2233	12.198
0.2266	12.191
0.2300	12.188
0.2333	12.185
0.2366	12.182
0.2400	12.178
0.2433	12.175
0.2466	12.172
0.2500	12.169
0.2533	12.166
0.2566	12.162
0.2600	12.159
0.2633	12.156
0.2666	12.153
0.2700	12.149
0.2733	12.146
0.2766	12.143
0.2800	12.140
0.2833	12.137
0.2866	12.134
0.2900	12.130
0.2933	12.127
0.2966	12.124
0.3000	12.121
0.3033	12.118
0.3066	12.114
0.3100	12.111
0.3133	12.108
0.3166	12.105
0.3200	12.102
0.3233	12.098
0.3266	12.095
0.3300	12.092
0.3333	12.089
0.3500	12.073
0.3666	12.057
0.3833	12.041
0.4000	12.025
0.4166	12.009
0.4333	11.996
0.4500	11.980
0.4666	11.964
0.4833	11.951
0.5000	11.938
0.5166	11.922
0.5333	11.906
0.5500	11.894
0.5666	11.881
0.5833	11.865
0.6000	11.852
0.6166	11.839
0.6333	11.826
0.6500	11.813
0.6666	11.801
0.6833	11.788
0.7000	11.775
0.7166	11.762
0.7333	11.749
0.7500	11.737
0.7666	11.727
0.7833	11.714
0.8000	11.701
0.8166	11.689
0.8333	11.679
0.8500	11.666
0.8666	11.657
0.8833	11.644
0.9000	11.634
0.9166	11.622
0.9333	11.612
0.9500	11.602
0.9666	11.589
0.9833	11.580
1.0000	11.570
1.2000	11.426
1.4000	11.324
1.6000	11.234
1.8000	11.154
2.0000	11.084
2.2000	11.020
2.4000	10.965
2.6000	10.917
2.8000	10.872
3.0000	10.834
3.2000	10.802
3.4000	10.773
3.6000	10.744
3.8000	10.722
4.0000	10.703
4.2000	10.684
4.4000	10.668
4.6000	10.652
4.8000	10.639
5.0000	10.626
5.2000	10.616
5.4000	10.607
5.6000	10.597
5.8000	10.594
6.0000	10.588
6.2000	10.581
6.4000	10.575
6.6000	10.572
6.8000	10.568
7.0000	10.565
7.2000	10.562
7.4000	10.559
7.6000	10.556
7.8000	10.556
8.0000	10.552
8.2000	10.552
8.4000	10.549
8.6000	10.549
8.8000	10.549
9.0000	10.546
9.2000	10.546
9.4000	10.546
9.6000	10.543
9.8000	10.543
10.0000	10.543

DATA USED IN AQTESOLV MW09-21D-R

0.0033	0.079	1	0.2033	1.757	1	0.6833	1.328	1
0.0066	2.269	1	0.2066	1.753	1	0.7	1.315	1
0.01	2.01	1	0.21	1.75	1	0.7166	1.302	1
0.0133	3.308	1	0.2133	1.747	1	0.7333	1.289	1
0.0166	3.839	1	0.2166	1.744	1	0.75	1.277	1
0.02	2.112	1	0.22	1.741	1	0.7666	1.267	1
0.0233	2.198	1	0.2233	1.738	1	0.7833	1.254	1
0.0266	2.909	1	0.2266	1.731	1	0.8	1.241	1
0.03	1.888	1	0.23	1.728	1	0.8166	1.229	1
0.0333	1.955	1	0.2333	1.725	1	0.8333	1.219	1
0.0366	1.99	1	0.2366	1.722	1	0.85	1.206	1
0.04	1.968	1	0.24	1.718	1	0.8666	1.197	1
0.0433	1.965	1	0.2433	1.715	1	0.8833	1.184	1
0.0466	1.958	1	0.2466	1.712	1	0.9	1.174	1
0.05	1.968	1	0.25	1.709	1	0.9166	1.162	1
0.0533	1.946	1	0.2533	1.706	1	0.9333	1.152	1
0.0566	1.933	1	0.2566	1.702	1	0.95	1.142	1
0.06	1.933	1	0.26	1.699	1	0.9666	1.129	1
0.0633	1.917	1	0.2633	1.696	1	0.9833	1.12	1
0.0666	1.926	1	0.2666	1.693	1	1	1.11	1
0.07	1.917	1	0.27	1.689	1	1.2	0.966	1
0.0733	1.888	1	0.2733	1.686	1	1.4	0.864	1
0.0766	1.901	1	0.2766	1.683	1	1.6	0.774	1
0.08	1.898	1	0.28	1.68	1	1.8	0.694	1
0.0833	1.904	1	0.2833	1.677	1	2	0.624	1
0.0866	1.891	1	0.2866	1.674	1	2.2	0.56	1
0.09	1.888	1	0.29	1.67	1	2.4	0.505	1
0.0933	1.885	1	0.2933	1.667	1	2.6	0.457	1
0.0966	1.882	1	0.2966	1.664	1	2.8	0.412	1
0.1	1.872	1	0.3	1.661	1	3	0.374	1
0.1033	1.872	1	0.3033	1.658	1	3.2	0.342	1
0.1066	1.866	1	0.3066	1.654	1	3.4	0.313	1
0.11	1.862	1	0.31	1.651	1	3.6	0.284	1
0.1133	1.853	1	0.3133	1.648	1	3.8	0.262	1
0.1166	1.85	1	0.3166	1.645	1	4	0.243	1
0.12	1.827	1	0.32	1.642	1	4.2	0.224	1
0.1233	1.843	1	0.3233	1.638	1	4.4	0.208	1
0.1266	1.84	1	0.3266	1.635	1	4.6	0.192	1
0.13	1.837	1	0.33	1.632	1	4.8	0.179	1
0.1333	1.83	1	0.3333	1.629	1	5	0.166	1
0.1366	1.827	1	0.35	1.613	1	5.2	0.156	1
0.14	1.824	1	0.3666	1.597	1	5.4	0.147	1
0.1433	1.821	1	0.3833	1.581	1	5.6	0.137	1
0.1466	1.818	1	0.4	1.565	1	5.8	0.134	1
0.15	1.814	1	0.4166	1.549	1	6	0.128	1
0.1533	1.811	1	0.4333	1.536	1	6.2	0.121	1
0.1566	1.805	1	0.45	1.52	1	6.4	0.115	1
0.16	1.801	1	0.4666	1.504	1	6.6	0.112	1
0.1633	1.798	1	0.4833	1.491	1	6.8	0.108	1
0.1666	1.795	1	0.5	1.478	1	7	0.105	1
0.17	1.792	1	0.5166	1.462	1	7.2	0.102	1
0.1733	1.789	1	0.5333	1.446	1	7.4	0.099	1
0.1766	1.786	1	0.55	1.434	1	7.6	0.096	1
0.18	1.782	1	0.5666	1.421	1	7.8	0.096	1
0.1833	1.776	1	0.5833	1.405	1	8	0.092	1
0.1866	1.773	1	0.6	1.392	1	8.2	0.092	1
0.19	1.77	1	0.6166	1.379	1	8.4	0.089	1
0.1933	1.77	1	0.6333	1.366	1	8.6	0.089	1
0.1966	1.763	1	0.65	1.353	1	8.8	0.089	1
0.2	1.76	1	0.6666	1.341	1	9	0.086	1
						9.2	0.086	1
						9.4	0.086	1
						9.6	0.083	1
						9.8	0.083	1
						10	0.083	1

MW-23S-R

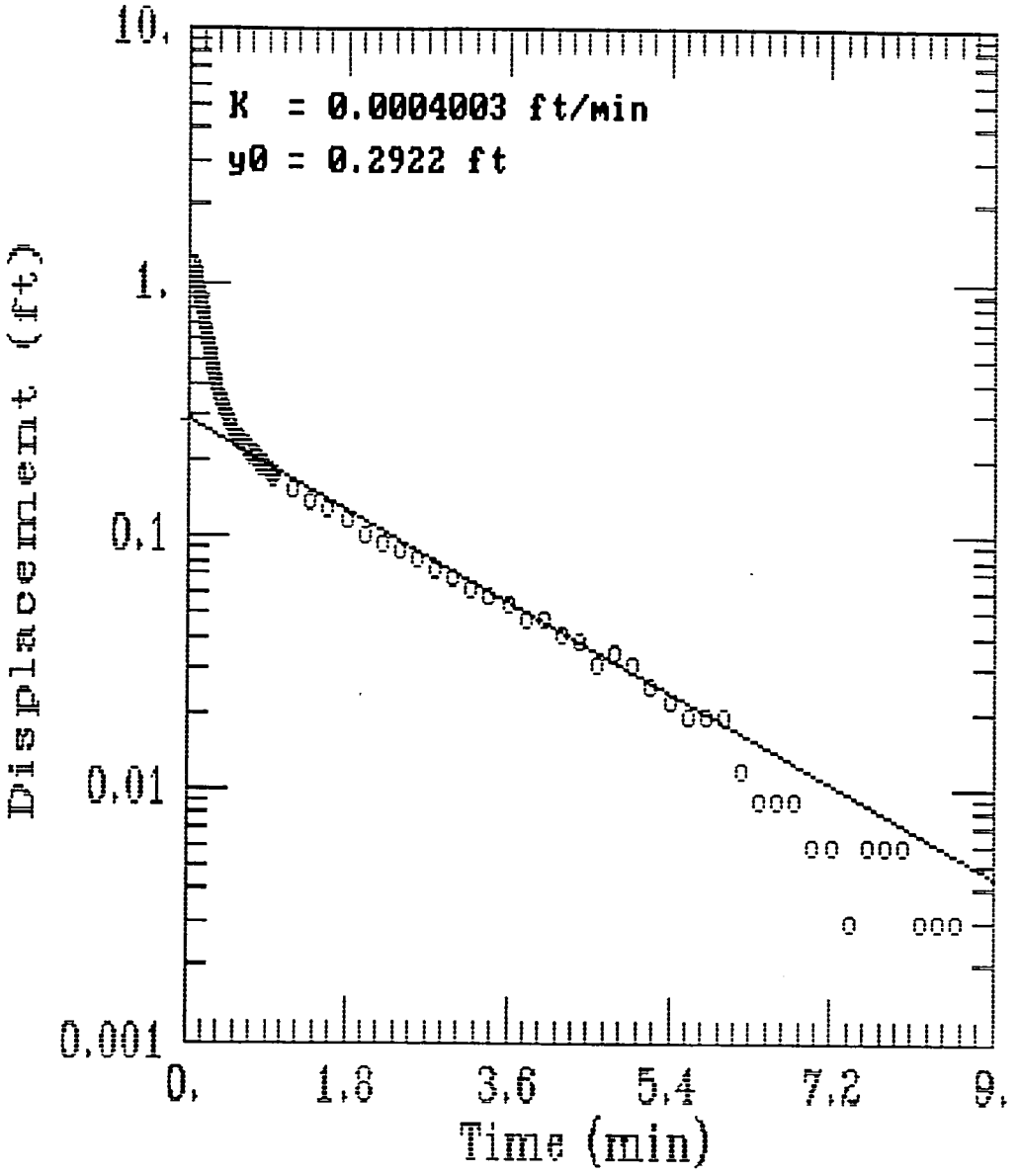
K = 0.0004003 ft/min
y0 = 0.2922 ft
10.
1.
0.1
0.01
0.001
Displacement (ft)
0.
1.8
3.6
5.4
7.2
9.
Time (min)

SE1000C
Environmental Logger
)4/27 18:05
MW09-23S-R
Unit# 05001 Test 7
Setups: INPUT 1
--- ---
Type Level (F)
Mode TOC
I.D. 00232
Reference 17.920
Linearity ⁸0.040
Scale factor 10.020
Offset -0.010
Delay mSEC 50.000
Step 2 04/21 15:41:57
Elapsed Time INPUT 1
--- ---

0.0000	17.850
0.0033	17.850
0.0066	17.837
0.0100	18.037
0.0133	19.238
0.0166	20.328
0.0200	21.213
0.0233	21.124
0.0266	19.680
0.0300	18.930
0.0333	19.889
0.0366	19.470
).0400	18.835
).0433	19.225
0.0466	19.565
0.0500	19.143
0.0533	18.965
0.0566	19.267
0.0600	19.289
0.0633	19.025
0.0666	19.038
0.0700	19.200
0.0733	19.117
0.0766	18.987
0.0800	19.032
0.0833	19.076
0.0866	19.006
0.0900	18.978
0.0933	18.997
0.0966	18.984
0.1000	18.940
0.1033	18.920
0.1066	18.940
0.1100	18.920
0.1133	18.879
0.1166	18.866
0.1200	18.873
0.1233	18.870
0.1266	18.835
0.1300	18.819
0.1333	18.806
.1366	18.806
0.1400	18.787
0.1433	18.768
0.1466	18.762
0.1500	18.752
0.1533	18.730
0.1566	18.717
0.1600	18.708
0.1633	18.698
0.1666	18.685
0.1700	18.673
0.1733	18.663
0.1766	18.663
0.1800	18.644
0.1833	18.625
0.1866	18.619
0.1900	18.612
0.1933	18.600
0.1966	18.584
0.2000	18.577
0.2033	18.571
0.2066	18.561
0.2100	18.549
0.2133	18.539
0.2166	18.533
0.2200	18.523
0.2233	18.514
0.2266	18.504
0.2300	18.495
0.2333	18.492
0.2366	18.479
0.2400	18.466
0.2433	18.463
0.2466	18.460
0.2500	18.450
0.2533	18.441
0.2566	18.434
0.2600	18.425
0.2633	18.418
0.2666	18.412
0.2700	18.406
0.2733	18.399
0.2766	18.393
0.2800	18.387
0.2833	18.383
0.2866	18.374
0.2900	18.364
0.2933	18.361
0.2966	18.358
0.3000	18.352
0.3033	18.349
0.3066	18.339
0.3100	18.339
0.3133	18.333
0.3166	18.326
0.3200	18.323
0.3233	18.317
0.3266	18.314
0.3300	18.310
0.3333	18.307
0.3500	18.285
0.3666	18.269
0.3833	18.256
0.4000	18.244
0.4166	18.231
0.4333	18.221
0.4500	18.212
0.4666	18.202
0.4833	18.196
0.5000	18.190
0.5166	18.177
0.5333	18.177
0.5500	18.171
0.5666	18.167
0.5833	18.161
0.6000	18.158
0.6166	18.155
0.6333	18.152
0.6500	18.148
0.6666	18.142
0.6833	18.142
0.7000	18.136
0.7166	18.129
0.7333	18.132
0.7500	18.129
0.7666	18.126
0.7833	18.120
0.8000	18.120
0.8166	18.117
0.8333	18.110
0.8500	18.113
0.8666	18.107
0.8833	18.107
0.9000	18.101
0.9166	18.098
0.9333	18.098
0.9500	18.094
0.9666	18.094
0.9833	18.091
1.0000	18.094
1.2000	18.072
1.4000	18.056
1.6000	18.047
1.8000	18.037
2.0000	18.021
2.2000	18.015
2.4000	18.009
2.6000	18.002
2.8000	17.993
3.0000	17.989
3.2000	17.983
3.4000	17.977
3.6000	17.974
3.8000	17.967
4.0000	17.967
4.2000	17.961
4.4000	17.958
4.6000	17.951
4.8000	17.954
5.0000	17.951
5.2000	17.945
5.4000	17.942
5.6000	17.939
5.8000	17.939
6.0000	17.939
6.2000	17.932
6.4000	17.929
6.6000	17.929
6.8000	17.929
7.0000	17.926
7.2000	17.926
7.4000	17.923
7.6000	17.926
7.8000	17.926
8.0000	17.926
8.2000	17.923
8.4000	17.923
8.6000	17.923
8.8000	17.920
9.0000	17.916
9.2000	17.916
9.4000	17.920
9.6000	17.916
9.8000	17.910
10.0000	17.913

DATA USED IN AQTESOLV MW09-23S-R

0	-0.07	0	0.1966	0.664	1	0.6666	0.222	1
0.0033	-0.07	0	0.2	0.657	1	0.6833	0.222	1
0.0066	-0.083	0	0.2033	0.651	1	0.7	0.216	1
0.01	0.117	1	0.2066	0.641	1	0.7166	0.209	1
0.0133	1.318	1	0.21	0.629	1	0.7333	0.212	1
0.0166	2.408	1	0.2133	0.619	1	0.75	0.209	1
0.02	3.293	1	0.2166	0.613	1	0.7666	0.206	1
0.0233	3.204	1	0.22	0.603	1	0.7833	0.2	1
0.0266	1.76	1	0.2233	0.594	1	0.8	0.2	1
0.03	1.01	1	0.2266	0.584	1	0.8166	0.197	1
0.0333	1.969	1	0.23	0.575	1	0.8333	0.19	1
0.0366	1.55	1	0.2333	0.572	1	0.85	0.193	1
0.04	0.915	1	0.2366	0.559	1	0.8666	0.187	1
0.0433	1.305	1	0.24	0.546	1	0.8833	0.187	1
0.0466	1.645	1	0.2433	0.543	1	0.9	0.181	1
0.05	1.223	1	0.2466	0.54	1	0.9166	0.178	1
0.0533	1.045	1	0.25	0.53	1	0.9333	0.178	1
0.0566	1.347	1	0.2533	0.521	1	0.95	0.174	1
0.06	1.369	1	0.2566	0.514	1	0.9666	0.174	1
0.0633	1.105	1	0.26	0.505	1	0.9833	0.171	1
0.0666	1.118	1	0.2633	0.498	1	1	0.174	1
0.07	1.28	1	0.2666	0.492	1	1.2	0.152	1
0.0733	1.197	1	0.27	0.486	1	1.4	0.136	1
0.0766	1.067	1	0.2733	0.479	1	1.6	0.127	1
0.08	1.112	1	0.2766	0.473	1	1.8	0.117	1
0.0833	1.156	1	0.28	0.467	1	2	0.101	1
0.0866	1.086	1	0.2833	0.463	1	2.2	0.095	1
0.09	1.058	1	0.2866	0.454	1	2.4	0.089	1
0.0933	1.077	1	0.29	0.444	1	2.6	0.082	1
0.0966	1.064	1	0.2933	0.441	1	2.8	0.073	1
0.1	1.02	1	0.2966	0.438	1	3	0.069	1
0.1033	1	1	0.3	0.432	1	3.2	0.063	1
0.1066	1.02	1	0.3033	0.429	1	3.4	0.057	1
0.11	1	1	0.3066	0.419	1	3.6	0.054	1
0.1133	0.959	1	0.31	0.419	1	3.8	0.047	1
0.1166	0.946	1	0.3133	0.413	1	4	0.047	1
0.12	0.953	1	0.3166	0.406	1	4.2	0.041	1
0.1233	0.95	1	0.32	0.403	1	4.4	0.038	1
0.1266	0.915	1	0.3233	0.397	1	4.6	0.031	1
0.13	0.899	1	0.3266	0.394	1	4.8	0.034	1
0.1333	0.886	1	0.33	0.39	1	5	0.031	1
0.1366	0.886	1	0.3333	0.387	1	5.2	0.025	1
0.14	0.867	1	0.35	0.365	1	5.4	0.022	1
0.1433	0.848	1	0.3666	0.349	1	5.6	0.019	1
0.1466	0.842	1	0.3833	0.336	1	5.8	0.019	1
0.15	0.832	1	0.4	0.324	1	6	0.019	1
0.1533	0.81	1	0.4166	0.311	1	6.2	0.012	1
0.1566	0.797	1	0.4333	0.301	1	6.4	0.009	1
0.16	0.788	1	0.45	0.292	1	6.6	0.009	1
0.1633	0.778	1	0.4666	0.282	1	6.8	0.009	1
0.1666	0.765	1	0.4833	0.276	1	7	0.006	1
0.17	0.753	1	0.5	0.27	1	7.2	0.006	1
0.1733	0.743	1	0.5166	0.257	1	7.4	0.003	1
0.1766	0.743	1	0.5333	0.257	1	7.6	0.006	1
0.18	0.724	1	0.55	0.251	1	7.8	0.006	1
0.1833	0.705	1	0.5666	0.247	1	8	0.006	1
0.1866	0.699	1	0.5833	0.241	1	8.2	0.003	1
0.19	0.692	1	0.6	0.238	1	8.4	0.003	1
0.1933	0.68	1	0.6166	0.235	1	8.6	0.003	1
			0.6333	0.232	1	8.8	0	1
			0.65	0.228	1	9	-0.004	0
						9.2	-0.004	0
						9.4	0	1
						9.6	-0.004	0
						9.8	-0.01	0
						10	-0.007	0

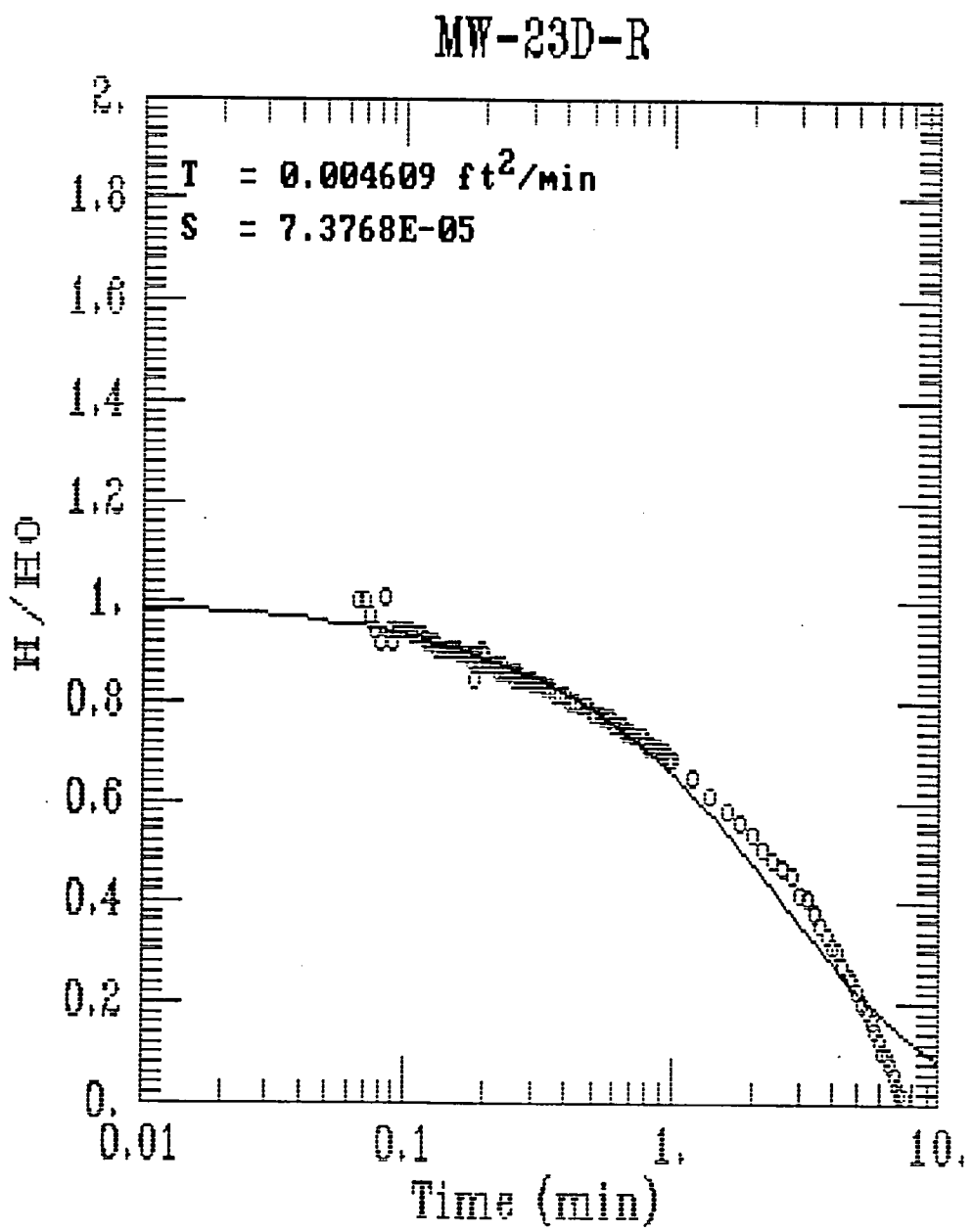
MW-23D-R
T = 0.004609 ft²/min
S = 7.3768E-05
H/H0
Time (min)
2.
1.8
1.6
1.4
1.2
1.
0.8
0.6
0.4
0.2
0.
0.01
0.1
1.
10.

SE1000C
Environmental Logger
05/02 08:46
MW09-23D-R
Unit# 05014 Test 5
INPUT 1: Level (F) TOC
Reference 17.480
Linearity 0.040
Scale factor 10.050
Offset -0.060
Delay mSEC 50.000
Step 2 04/21 15:28:50
Elapsed Time INPUT 1

0.0000	18.714
0.0033	18.759
0.0066	18.436
0.0100	17.684
0.0133	17.624
0.0166	17.544
0.0200	17.873
0.0233	17.963
0.0266	17.825
0.0300	17.320
0.0333	17.508
0.0366	17.799
0.0400	17.972
0.0433	17.729
0.0466	17.678
0.0500	17.748
.0533	17.809
.0566	17.790
0.0600	17.729
0.0633	17.736
0.0666	17.755
0.0700	17.755
0.0733	17.748
0.0766	17.739
0.0800	17.732
0.0833	17.758
0.0866	17.739
0.0900	17.732
0.0933	17.739
0.0966	17.739
0.1000	17.739
0.1033	17.739
0.1066	17.736
0.1100	17.736
0.1133	17.736
0.1166	17.736
0.1200	17.732
0.1233	17.732
0.1266	17.732
0.1300	17.732
0.1333	17.729
0.1366	17.729
0.1400	17.729
0.1433	17.729
0.1466	17.729
.1500	17.729
0.1533	17.729
0.1566	17.729
0.1600	17.726
0.1633	17.726
0.1666	17.726
0.1700	17.726
0.1733	17.726
0.1766	17.723
0.1800	17.723
0.1833	17.713
0.1866	17.726
0.1900	17.723
0.1933	17.729
0.1966	17.720
0.2000	17.726
0.2033	17.720
0.2066	17.720
0.2100	17.720
0.2133	17.720
0.2166	17.720
0.2200	17.720
0.2233	17.720
0.2266	17.716
0.2300	17.720
0.2333	17.720
0.2366	17.716
0.2400	17.716
0.2433	17.716
0.2466	17.716
0.2500	17.716
0.2533	17.716
0.2566	17.716
0.2600	17.713
0.2633	17.716
0.2666	17.713
0.2700	17.713
0.2733	17.713
0.2766	17.713
0.2800	17.713
0.2833	17.713
0.2866	17.713
0.2900	17.713
0.2933	17.713
0.2966	17.713
0.3000	17.710
0.3033	17.710
0.3066	17.710
0.3100	17.710
0.3133	17.710
0.3166	17.710
0.3200	17.710
0.3233	17.710
0.3266	17.710
0.3300	17.710
0.3333	17.707
0.3500	17.707
0.3666	17.703
0.3833	17.703
0.4000	17.703
0.4166	17.700
0.4333	17.700
0.4500	17.697
0.4666	17.697
0.4833	17.697
0.5000	17.694
0.5166	17.694
0.5333	17.694
0.5500	17.691
0.5666	17.691
0.5833	17.691
0.6000	17.688
0.6166	17.688
0.6333	17.688
0.6500	17.688
0.6666	17.684
0.6833	17.684
0.7000	17.684
0.7166	17.681
0.7333	17.681
0.7500	17.681
0.7666	17.681
0.7833	17.678
0.8000	17.678
0.8166	17.675
0.8333	17.678
0.8500	17.675
0.8666	17.675
0.8833	17.675
0.9000	17.672
0.9166	17.672
0.9333	17.672
0.9500	17.672
0.9666	17.668
0.9833	17.668
1.0000	17.668
1.2000	17.659
1.4000	17.649
1.6000	17.640
1.8000	17.633
2.0000	17.627
2.2000	17.620
2.4000	17.614
2.6000	17.608
2.8000	17.604
3.0000	17.595
3.2000	17.592
3.4000	17.585
3.6000	17.579
3.8000	17.572
4.0000	17.566
4.2000	17.563
4.4000	17.556
4.6000	17.550
4.8000	17.547
5.0000	17.540
5.2000	17.534
5.4000	17.531
5.6000	17.524
5.8000	17.521
6.0000	17.515
6.2000	17.508
6.4000	17.505
6.6000	17.502
6.8000	17.496
7.0000	17.489
7.2000	17.486
7.4000	17.483
7.6000	17.480
7.8000	17.473
8.0000	17.470
8.2000	17.464
8.4000	17.457
8.6000	17.454
8.8000	17.451
9.0000	17.447
9.2000	17.441
9.4000	17.438
9.6000	17.435
9.8000	17.428
10.0000	17.425

DATA USED IN AQTESOLV MW09-23D-R

0	0.314	1	0.1966	1.799	1	0.6833	1.754	1
0.0033	0.314	1	0.2	1.789	1	0.7	1.754	1
0.0066	0.32	1	0.2033	1.777	1	0.7166	1.754	1
0.01	0.32	1	0.2066	1.777	1	0.7333	1.751	1
0.0133	1.857	1	0.21	1.783	1	0.75	1.751	1
0.0166	1.994	1	0.2133	1.786	1	0.7666	1.751	1
0.02	1.617	1	0.2166	1.783	1	0.7833	1.751	1
0.0233	1.271	1	0.22	1.777	1	0.8	1.751	1
0.0266	1.514	1	0.2233	1.78	1	0.8166	1.748	1
0.03	2.324	1	0.2266	1.78	1	0.8333	1.748	1
0.0333	2.334	1	0.23	1.783	1	0.85	1.748	1
0.0366	2.286	1	0.2333	1.78	1	0.8666	1.748	1
0.04	2.247	1	0.2366	1.78	1	0.8833	1.745	1
0.0433	1.741	1	0.24	1.78	1	0.9	1.745	1
0.0466	1.738	1	0.2433	1.78	1	0.9166	1.745	1
0.05	1.982	1	0.2466	1.78	1	0.9333	1.745	1
0.0533	1.822	1	0.25	1.777	1	0.95	1.741	1
0.0566	1.751	1	0.2533	1.777	1	0.9666	1.741	1
0.06	2.171	1	0.2566	1.78	1	0.9833	1.741	1
0.0633	2.491	1	0.26	1.777	1	1	1.741	1
0.0666	2.407	1	0.2633	1.777	1	1.2	1.732	1
0.07	1.847	1	0.2666	1.777	1	1.4	1.726	1
0.0733	1.607	1	0.27	1.777	1	1.6	1.716	1
0.0766	1.793	1	0.2733	1.777	1	1.8	1.709	1
0.08	1.774	1	0.2766	1.777	1	2	1.703	1
0.0833	1.818	1	0.28	1.777	1	2.2	1.697	1
0.0866	1.764	1	0.2833	1.777	1	2.4	1.687	1
0.09	2.078	1	0.2866	1.777	1	2.6	1.681	1
0.0933	2.241	1	0.29	1.777	1	2.8	1.671	1
0.0966	2.331	1	0.2933	1.777	1	3	1.668	1
0.1	2.174	1	0.2966	1.777	1	3.2	1.661	1
0.1033	1.898	1	0.3	1.777	1	3.4	1.655	1
0.1066	2.247	1	0.3033	1.774	1	3.6	1.649	1
0.11	2.167	1	0.3066	1.774	1	3.8	1.639	1
0.1133	2.113	1	0.31	1.774	1	4	1.636	1
0.1166	2.01	1	0.3133	1.774	1	4.2	1.626	1
0.12	1.479	1	0.3166	1.774	1	4.4	1.62	1
0.1233	1.412	1	0.32	1.774	1	4.6	1.613	1
0.1266	1.655	1	0.3233	1.774	1	4.8	1.607	1
0.13	1.604	1	0.3266	1.774	1	5	1.601	1
0.1333	1.732	1	0.33	1.774	1	5.2	1.594	1
0.1366	1.668	1	0.3333	1.77	1	5.4	1.588	1
0.14	2.02	1	0.35	1.77	1	5.6	1.581	1
0.1433	2.164	1	0.3666	1.77	1	5.8	1.575	1
0.1466	2.094	1	0.3833	1.77	1	6	1.569	1
0.15	1.588	1	0.4	1.77	1	6.2	1.562	1
0.1533	1.469	1	0.4166	1.767	1	6.4	1.556	1
0.1566	1.802	1	0.4333	1.767	1	6.6	1.549	1
0.16	1.77	1	0.45	1.767	1	6.8	1.546	1
0.1633	1.885	1	0.4666	1.764	1	7	1.54	1
0.1666	1.748	1	0.4833	1.764	1	7.2	1.533	1
0.17	1.745	1	0.5	1.764	1	7.4	1.527	1
0.1733	1.738	1	0.5166	1.764	1	7.6	1.524	1
0.1766	1.809	1	0.5333	1.761	1	7.8	1.514	1
0.18	1.809	1	0.55	1.761	1	8	1.511	1
0.1833	1.809	1	0.5666	1.761	1	8.2	1.505	1
0.1866	1.767	1	0.5833	1.757	1	8.4	1.498	1
0.19	1.764	1	0.6	1.757	1	8.6	1.492	1
0.1933	1.783	1	0.6166	1.757	1	8.8	1.489	1
			0.6333	1.757	1	9	1.482	1
			0.65	1.757	1	9.2	1.479	1
			0.6666	1.757	1	9.4	1.473	1
						9.6	1.466	1
						9.8	1.46	1
						10	1.453	1
						12	1.402	1
						14	1.357	1

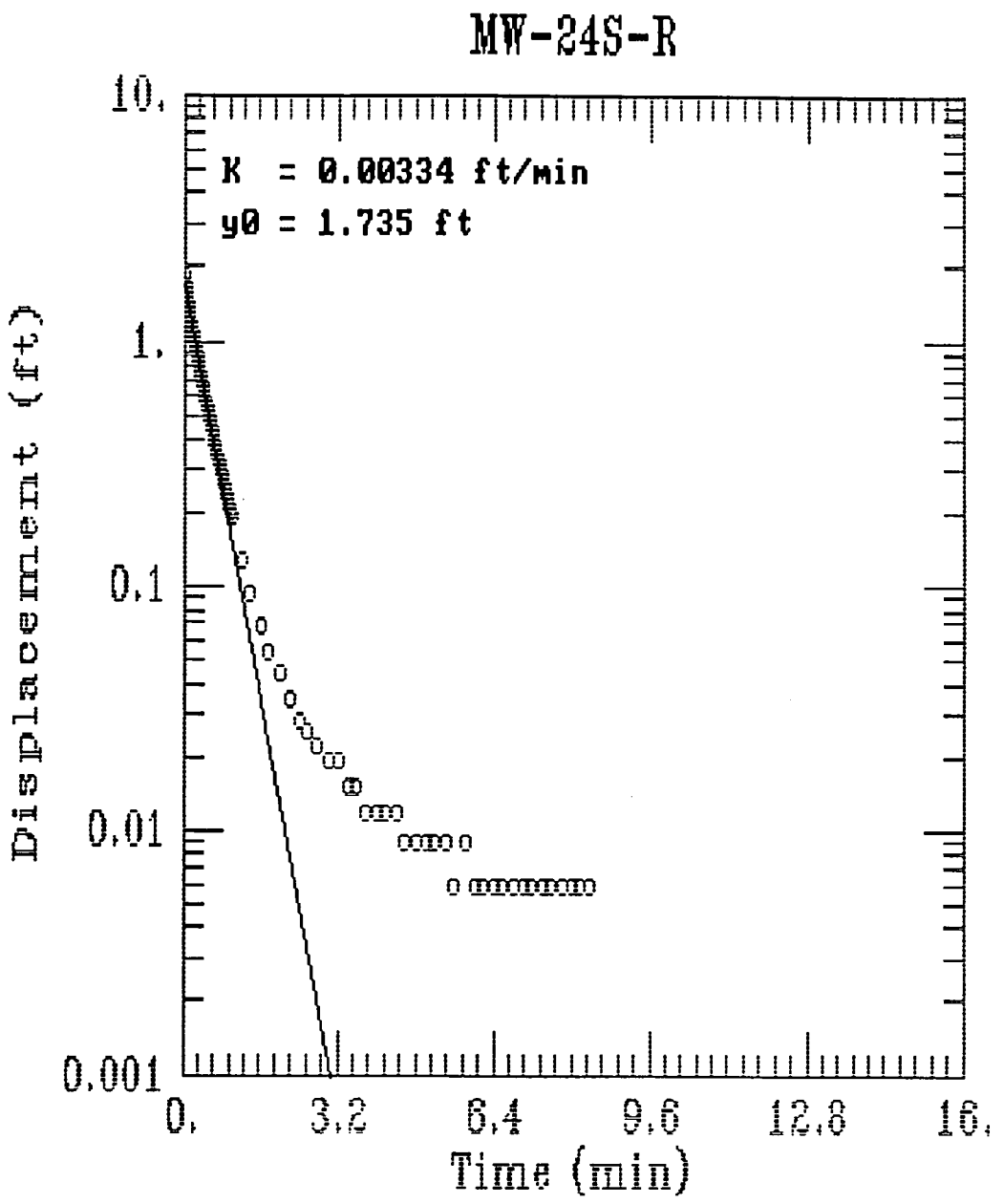
MW-24S-R
K = 0.00334 ft/min
y0 = 1.735 ft
10.
1.
0.1
0.01
0.001
Displacement (ft)
0.
3.2
6.4
9.6
12.8
16.
Time (min)

SE1000C
Environmental Logger
04/28 08:03
MW09-24S-R
Unit# 05014 Test 1
Setups: INPUT 1

Type	Level (F)
Mode	TOC
I.D.	00242
Reference	3.760
Linearity	0.040
Scale factor	10.020
Offset	-0.010
Delay mSEC	50.000

Step 2 04/20 16:39:41
Elapsed Time INPUT 1

0.0000	3.756
0.0033	3.753
0.0066	3.747
0.0100	3.880
0.0133	4.296
0.0166	4.814
0.0200	4.846
0.0233	4.531
0.0266	4.293
0.0300	4.007
0.0333	4.506
0.0366	5.414
.0400	5.490
.0433	5.452
0.0466	5.573
0.0500	5.404
0.0533	5.369
0.0566	5.328
0.0600	5.309
0.0633	5.290
0.0666	5.274
0.0700	5.249
0.0733	5.230
0.0766	5.220
0.0800	5.201
0.0833	5.188
0.0866	5.169
0.0900	5.157
0.0933	5.134
0.0966	5.131
0.1000	5.128
0.1033	5.100
0.1066	5.087
0.1100	5.071
0.1133	5.065
0.1166	5.049
0.1200	5.036
0.1233	5.027
0.1266	5.014
0.1300	5.004
1333	4.992
1366	4.992

0.1400	4.969	0.3833	4.442	5.8000	3.769
0.1433	4.960	0.4000	4.417	6.0000	3.766
0.1466	4.950	0.4166	4.392	6.2000	3.766
0.1500	4.938	0.4333	4.369	6.4000	3.766
0.1533	4.928	0.4500	4.347	6.6000	3.766
0.1566	4.919	0.4666	4.325	6.8000	3.766
0.1600	4.909	0.4833	4.306	7.0000	3.766
0.1633	4.900	0.5000	4.287	7.2000	3.766
0.1666	4.890	0.5166	4.268	7.4000	3.766
0.1700	4.881	0.5333	4.249	7.6000	3.766
0.1733	4.871	0.5500	4.233	7.8000	3.766
0.1766	4.861	0.5666	4.217	8.0000	3.766
0.1800	4.852	0.5833	4.198	8.2000	3.766
0.1833	4.842	0.6000	4.185	8.4000	3.766
0.1866	4.836	0.6166	4.169	8.6000	3.763
0.1900	4.830	0.6333	4.157	8.8000	3.766
0.1933	4.820	0.6500	4.141	9.0000	3.763
0.1966	4.811	0.6666	4.131	9.2000	3.763
0.2000	4.801	0.6833	4.118	9.4000	3.763
0.2033	4.795	0.7000	4.106	9.6000	3.763
0.2066	4.785	0.7166	4.093	9.8000	3.763
0.2100	4.779	0.7333	4.083	10.0000	3.763
0.2133	4.769	0.7500	4.071	12.0000	3.766
0.2166	4.763	0.7666	4.061	14.0000	3.766
0.2200	4.753	0.7833	4.052	16.0000	3.766
0.2233	4.744	0.8000	4.042		
0.2266	4.738	0.8166	4.033		
0.2300	4.731	0.8333	4.026		
0.2333	4.722	0.8500	4.017		
0.2366	4.715	0.8666	4.010		
0.2400	4.709	0.8833	4.001		
0.2433	4.703	0.9000	3.995		
0.2466	4.693	0.9166	3.988		
0.2500	4.687	0.9333	3.982		
0.2533	4.680	0.9500	3.975		
0.2566	4.674	0.9666	3.969		
0.2600	4.665	0.9833	3.963		
0.2633	4.658	1.0000	3.956		
0.2666	4.652	1.2000	3.890		
0.2700	4.646	1.4000	3.855		
0.2733	4.639	1.6000	3.829		
0.2766	4.633	1.8000	3.814		
0.2800	4.627	2.0000	3.804		
0.2833	4.620	2.2000	3.794		
0.2866	4.611	2.4000	3.788		
0.2900	4.604	2.6000	3.785		
0.2933	4.601	2.8000	3.782		
0.2966	4.595	3.0000	3.779		
0.3000	4.588	3.2000	3.779		
0.3033	4.582	3.4000	3.775		
0.3066	4.576	3.6000	3.775		
0.3100	4.569	3.8000	3.772		
0.3133	4.563	4.0000	3.772		
0.3166	4.557	4.2000	3.772		
0.3200	4.550	4.4000	3.772		
0.3233	4.544	4.6000	3.769		
0.3266	4.541	4.8000	3.769		
0.3300	4.534	5.0000	3.769		
0.3333	4.528	5.2000	3.769		
0.3500	4.499	5.4000	3.769		
0.3666	4.471	5.6000	3.766		

DATA USED IN AQTESOLV MW09-24S-R

0	-0.004	0	0.1966	1.051	1	0.65	0.381	1
0.0033	-0.007	0	0.2	1.041	1	0.6666	0.371	1
0.0066	-0.013	0	0.2033	1.035	1	0.6833	0.358	1
0.01	0.12	1	0.2066	1.025	1	0.7	0.346	1
0.0133	0.536	1	0.21	1.019	1	0.7166	0.333	1
0.0166	1.054	1	0.2133	1.009	1	0.7333	0.323	1
0.02	1.086	1	0.2166	1.003	1	0.75	0.311	1
0.0233	0.771	1	0.22	0.993	1	0.7666	0.301	1
0.0266	0.533	1	0.2233	0.984	1	0.7833	0.292	1
0.03	0.247	1	0.2266	0.978	1	0.8	0.282	1
0.0333	0.746	1	0.23	0.971	1	0.8166	0.273	1
0.0366	1.654	1	0.2333	0.962	1	0.8333	0.266	1
0.04	1.73	1	0.2366	0.955	1	0.85	0.257	1
0.0433	1.692	1	0.24	0.949	1	0.8666	0.25	1
0.0466	1.813	1	0.2433	0.943	1	0.8833	0.241	1
0.05	1.644	1	0.2466	0.933	1	0.9	0.235	1
0.0533	1.609	1	0.25	0.927	1	0.9166	0.228	1
0.0566	1.568	1	0.2533	0.92	1	0.9333	0.222	1
0.06	1.549	1	0.2566	0.914	1	0.95	0.215	1
0.0633	1.53	1	0.26	0.905	1	0.9666	0.209	1
0.0666	1.514	1	0.2633	0.898	1	0.9833	0.203	1
0.07	1.489	1	0.2666	0.892	1	1	0.196	1
0.0733	1.47	1	0.27	0.886	1	1.2	0.13	1
0.0766	1.46	1	0.2733	0.879	1	1.4	0.095	1
0.08	1.441	1	0.2766	0.873	1	1.6	0.069	1
0.0833	1.428	1	0.28	0.867	1	1.8	0.054	1
0.0866	1.409	1	0.2833	0.86	1	2	0.044	1
0.09	1.397	1	0.2866	0.851	1	2.2	0.034	1
0.0933	1.374	1	0.29	0.844	1	2.4	0.028	1
0.0966	1.371	1	0.2933	0.841	1	2.6	0.025	1
0.1	1.368	1	0.2966	0.835	1	2.8	0.022	1
0.1033	1.34	1	0.3	0.828	1	3	0.019	1
0.1066	1.327	1	0.3033	0.822	1	3.2	0.019	1
0.11	1.311	1	0 3066	0.816	1	3.4	0.015	1
0.1133	1.305	1	0.31	0.809	1	3.6	0.015	1
0.1166	1.289	1	0.3133	0.803	1	3.8	0.012	1
0.12	1.276	1	0.3166	0.797	1	4	0.012	1
0.1233	1.267	1	0.32	0.79	1	4.2	0.012	1
0.1266	1.254	1	0.3233	0.784	1	4.4	0.012	1
0.13	1.244	1	0.3266	0.781	1	4.6	0.009	1
0.1333	1.232	1	0.33	0.774	1	4.8	0.009	1
0.1366	1.232	1	0.3333	0.768	1	5	0.009	1
0.14	1.209	1	0.35	0.739	1	5.2	0.009	1
0.1433	1.2	1	0.3666	0.711	1	5.4	0.009	1
0.1466	1.19	1	0.3833	0.682	1	5.6	0.006	1
0.15	1.178	1	0.4	0.657	1	5.8	0.009	1
0.1533	1.168	1	0.4166	0.632	1	6	0.006	1
0.1566	1.159	1	0.4333	0.609	1	6.2	0.006	1
0.16	1.149	1	0.45	0.587	1	6.4	0.006	1
0.1633	1.14	1	0.4666	0.565	1	6.6	0.006	1
0.1666	1.13	1	0.4833	0.546	1	6.8	0.006	1
0.17	1.121	1	0.5	0.527	1	7	0.006	1
0.1733	1.111	1	0.5166	0.508	1	7.2	0.006	1
0.1766	1.101	1	0.5333	0.489	1	7.4	0.006	1
0.18	1.092	1	0.55	0.473	1	7.6	0.006	1
0.1833	1.082	1	0.5666	0.457	1	7.8	0.006	1
0.1866	1.076	1	0.5833	0.438	1	8	0.006	1
0.19	1.07	1	0.6	0.425	1	8.2	0.006	1
0.1933	1.06	1	0.6166	0.409	1	8.4	0.006	1
			0.6333	0.397	1	8.6	0.003	1
						8.8	0.006	1
						9	0.003	1
						9.2	0.003	1
						9.4	0.003	1
						9.6	0.003	1
						9.8	0.003	1
						10	0.003	1
						12	0.006	1
						14	0.006	1
						16	0.006	1

MW-24D-R

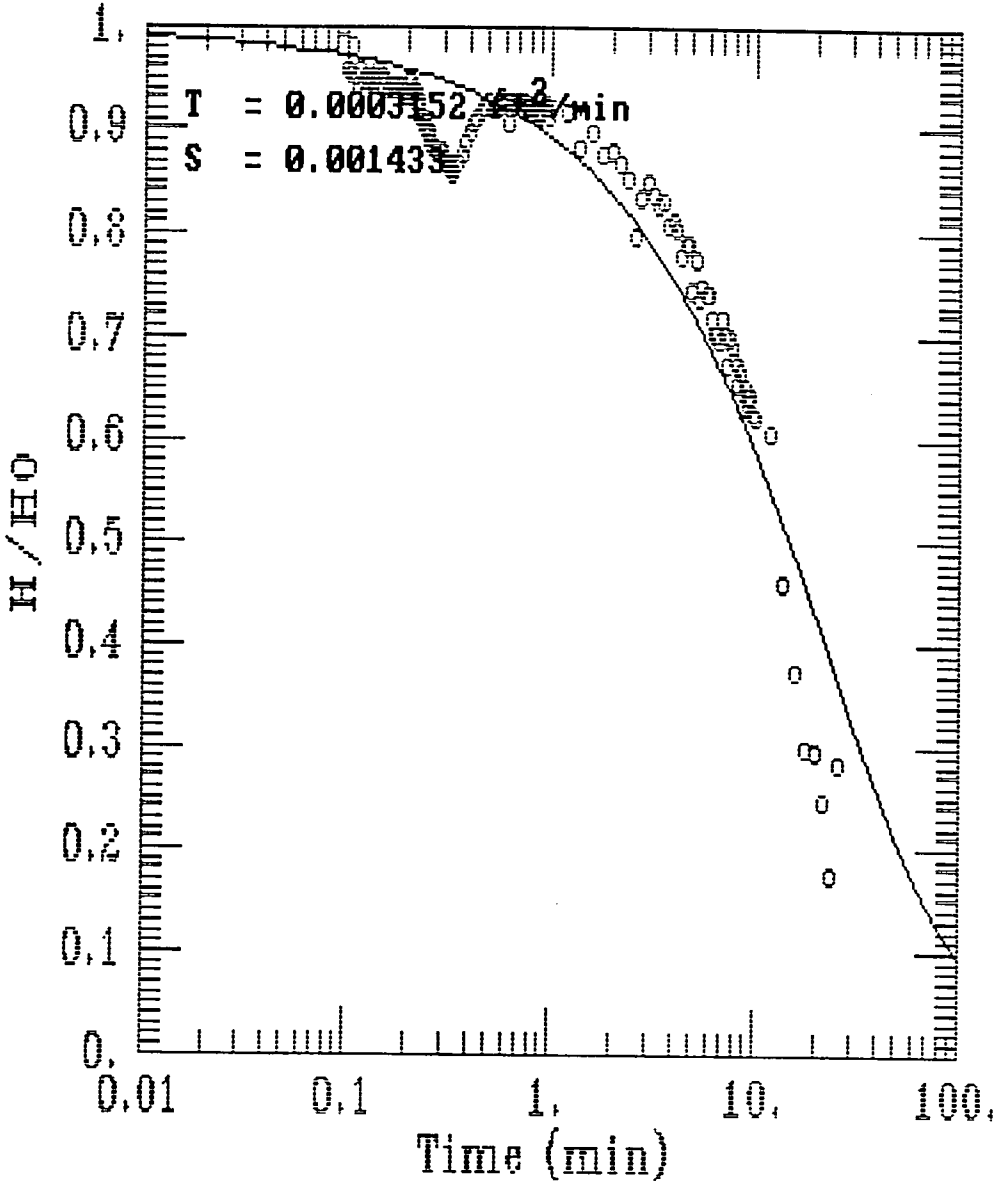
T = 0.0003152 ft²/min
S = 0.001433
H/H0
Time (min)
1.
0.9
0.8
0.7
0.6
0.5
0.4
0.3
0.2
0.1
0.
0.01
0.1
1.
10.
100.

SE1000C
Environmental Logger
04/25 18:28
MW09-24D-R
Unit# 05001 Test 1
Setups: INPUT 1

Type	Level (F)
Mode	TOC
I.D.	00241
Reference	6.010
Linearity	0.030
Scale factor	9.970
Offset	0.010
Delay mSEC	50.000

Step 2 04/20 15:53:47
Elapsed Time INPUT 1

0.0000	5.217
0.0033	5.239
0.0066	5.249
0.0100	5.430
0.0133	6.615
0.0166	8.424
0.0200	7.157
0.0233	6.403
0.0266	7.680
0.0300	6.564
0.0333	5.978
0.0366	7.623
0.0400	7.981
0.0433	7.486
0.0466	7.094
0.0500	6.447
0.0533	6.767
0.0566	8.009
0.0600	7.208
0.0633	6.618
0.0666	7.413
0.0700	7.166
0.0733	6.903
0.0766	7.249
0.0800	7.119
0.0833	6.998
0.0866	7.169
0.0900	7.090
0.0933	7.055
0.0966	7.125
0.1000	7.078
0.1033	7.074
0.1066	7.103
0.1100	7.068
0.1133	7.062
0.1166	7.078
0.1200	7.065
0.1233	7.071
0.1266	7.071
0.1300	7.062
0.1333	7.065
0.1366	7.062
0.1400	7.068
0.1433	7.078
0.1466	7.071
0.1500	7.068
0.1533	7.062
0.1566	7.065
0.1600	7.059
0.1633	7.062
0.1666	7.062
0.1700	7.059
0.1733	7.059
0.1766	7.062
0.1800	7.062
0.1833	7.062
0.1866	7.055
0.1900	7.049
0.1933	7.052
0.1966	7.049
0.2000	7.055
0.2033	7.065
0.2066	7.052
0.2100	7.065
0.2133	7.059
0.2166	7.049
0.2200	7.052
0.2233	7.040
0.2266	7.043
0.2300	7.030
0.2333	7.030
0.2366	7.024
0.2400	7.017
0.2433	7.024
0.2466	7.011
0.2500	7.011
0.2533	7.011
0.2566	6.998
0.2600	6.998
0.2633	6.998
0.2666	6.995
0.2700	6.989
0.2733	6.992
0.2766	6.986
0.2800	6.986
0.2833	6.989
0.2866	6.989
0.2900	6.989
0.2933	6.989
0.2966	6.982
0.3000	6.982
0.3033	6.982
0.3066	6.982
0.3100	6.976
0.3133	6.973
0.3166	6.973
0.3200	6.976
0.3233	6.970
0.3266	6.967
0.3300	6.970
0.3333	6.970
0.3500	6.976
0.3666	6.986
0.3833	6.998
0.4000	7.011
0.4166	7.021
0.4333	7.024
0.4500	7.033
0.4666	7.036
0.4833	7.036
0.5000	7.043
0.5166	7.036
0.5333	7.040
0.5500	7.036
0.5666	7.049
0.5833	7.040
0.6000	7.046
0.6166	7.021
0.6333	7.036
0.6500	7.043
0.6666	7.040
0.6833	7.043
0.7000	7.043
0.7166	7.036
0.7333	7.043
0.7500	7.040
0.7666	7.033
0.7833	7.036
0.8000	7.033
0.8166	7.040
0.8333	7.036
0.8500	7.033
0.8666	7.033
0.8833	7.030
0.9000	7.033
0.9166	7.046
0.9333	7.036
0.9500	7.036
0.9666	7.040
0.9833	7.030
1.0000	7.036
1.2000	7.033
1.4000	6.995
1.6000	7.011
1.8000	6.986
2.0000	6.992
2.2000	6.976
2.4000	6.960
2.6000	6.900
2.8000	6.941
3.0000	6.957
3.2000	6.944
3.4000	6.932
3.6000	6.935
3.8000	6.910
4.0000	6.916
4.2000	6.907
4.4000	6.878
4.6000	6.891
4.8000	6.891
5.0000	6.840
5.2000	6.872
5.4000	6.830
5.6000	6.843
5.8000	6.837
6.0000	6.837
6.2000	6.811
6.4000	6.796
6.6000	6.792
6.8000	6.786
7.0000	6.811
7.2000	6.796
7.4000	6.761
7.6000	6.789
7.8000	6.780
8.0000	6.764
8.2000	6.761
8.4000	6.739
8.6000	6.751
8.8000	6.716
9.0000	6.735
9.2000	6.720
9.4000	6.729
9.6000	6.729
9.8000	6.707
10.0000	6.704
12.0000	6.685
14.0000	6.523
16.0000	6.425
18.0000	6.342
20.0000	6.339
22.0000	6.282
24.0000	6.206
26.0000	6.327

DATA USED IN AQTESOLV MW09-24D-R

0	-0.793	0	0.2	1.045	1	0.6666	1.03	1
0.0033	-0.771	0	0.2033	1.055	1	0.6833	1.033	1
0.0066	-0.761	0	0.2066	1.042	1	0.7	1.033	1
0.01	-0.58	0	0.21	1.055	1	0.7166	1.026	1
0.0133	0.605	1	0.2133	1.049	1	0.7333	1.033	1
0.0166	2.414	1	0.2166	1.039	1	0.75	1.03	1
0.02	1.147	1	0.22	1.042	1	0.7666	1.023	1
0.0233	0.393	1	0.2233	1.03	1	0.7833	1.026	1
0.0266	1.67	1	0.2266	1.033	1	0.8	1.023	1
0.03	0.554	1	0.23	1.02	1	0.8166	1.03	1
0.0333	-0.032	1	0.2333	1.02	1	0.8333	1.026	1
0.0366	1.613	1	0.2366	1.014	1	0.85	1.023	1
0.04	1.971	1	0.24	1.007	1	0.8666	1.023	1
0.0433	1.476	1	0.2433	1.014	1	0.8833	1.02	1
0.0466	1.084	1	0.2466	1.001	1	0.9	1.023	1
0.05	0.437	1	0.25	1.001	1	0.9166	1.036	1
0.0533	0.757	1	0.2533	1.001	1	0.9333	1.026	1
0.0566	1.999	1	0.2566	0.988	1	0.95	1.026	1
0.06	1.198	1	0.26	0.988	1	0.9666	1.03	1
0.0633	0.608	1	0.2633	0.988	1	0.9833	1.02	1
0.0666	1.403	1	0.2666	0.985	1	1	1.026	1
0.07	1.156	1	0.27	0.979	1	1.2	1.023	1
0.0733	0.893	1	0.2733	0.982	1	1.4	0.985	1
0.0766	1.239	1	0.2766	0.976	1	1.6	1.001	1
0.08	1.109	1	0.28	0.976	1	1.8	0.976	1
0.0833	0.988	1	0.2833	0.979	1	2	0.982	1
0.0866	1.159	1	0.2866	0.979	1	2.2	0.966	1
0.09	1.08	1	0.29	0.979	1	2.4	0.95	1
0.0933	1.045	1	0.2933	0.979	1	2.6	0.89	1
0.0966	1.115	1	0.2966	0.972	1	2.8	0.931	1
0.1	1.068	1	0.3	0.972	1	3	0.947	1
0.1033	1.064	1	0.3033	0.972	1	3.2	0.934	1
0.1066	1.093	1	0.3066	0.972	1	3.4	0.922	1
0.11	1.058	1	0.31	0.966	1	3.6	0.925	1
0.1133	1.052	1	0.3133	0.963	1	3.8	0.9	1
0.1166	1.068	1	0.3166	0.963	1	4	0.906	1
0.12	1.055	1	0.32	0.966	1	4.2	0.897	1
0.1233	1.061	1	0.3233	0.96	1	4.4	0.868	1
0.1266	1.061	1	0.3266	0.957	1	4.6	0.881	1
0.13	1.052	1	0.33	0.96	1	4.8	0.881	1
0.1333	1.055	1	0.3333	0.96	1	5	0.83	1
0.1366	1.052	1	0.35	0.966	1	5.2	0.862	1
0.14	1.058	1	0.3666	0.976	1	5.4	0.82	1
0.1433	1.068	1	0.3833	0.988	1	5.6	0.833	1
0.1466	1.061	1	0.4	1.001	1	5.8	0.827	1
0.15	1.058	1	0.4166	1.011	1	6	0.827	1
0.1533	1.052	1	0.4333	1.014	1	6.2	0.801	1
0.1566	1.055	1	0.45	1.023	1	6.4	0.786	1
0.16	1.049	1	0.4666	1.026	1	6.6	0.782	1
0.1633	1.052	1	0.4833	1.026	1	6.8	0.776	1
0.1666	1.052	1	0.5	1.033	1	7	0.801	1
0.17	1.049	1	0.5166	1.026	1	7.2	0.786	1
0.1733	1.049	1	0.5333	1.03	1	7.4	0.751	1
0.1766	1.052	1	0.55	1.026	1	7.6	0.779	1
0.18	1.052	1	0.5666	1.039	1	7.8	0.77	1
0.1833	1.052	1	0.5833	1.03	1	8	0.754	1
0.1866	1.045	1	0.6	1.036	1	8.2	0.751	1
0.19	1.039	1	0.6166	1.011	1	8.4	0.729	1
0.1933	1.042	1	0.6333	1.026	1	8.6	0.741	1
0.1966	1.039	1	0.65	1.033	1	8.8	0.706	1
						9	0.725	1
						9.2	0.71	1
						9.4	0.719	1
						9.6	0.719	1
						9.8	0.697	1
						10	0.694	1
						12	0.675	1
						14	0.513	1
						16	0.415	1
						18	0.332	1
						20	0.329	1
						22	0.272	1
						24	0.196	1
						26	0.317	1

APPENDIX H

PHASE III PACKER TEST FORMS

PACKER TEST LOG

Project Name: IR Program Site 09, Allen Harbor Landfill					Hole No.	MW09-20R
Project Number: 29600.32					Test No.	1
Client: NORDIV, NAVFAC					Location:	Site 09
Contractor: A&W Environmental Drilling					Date:	21 March 1995
	Packer System	Water Meter	Water Gauge	Surge Chamber	Driller:	Don Sylvia
Type					Inspector:	D. Acampora
Mfg.					Hole Size:	HX-Core
Model No.					Length of Section:	5 ft

GPmax = (0.566 to 1.0) × H1 _____ Rock Type _____

Computed Max Gauge Pressure: (GPmax) _____ Recovery _____

Computed Internal Friction _____ RQD (%) _____

Depths: (all distances measured from ground surface in feet)

To Top of Rock 70 ft To Top Lower Packer _____

To Bottom of Boring 84.5 ft To Bottom Upper Packer (H1) _____

To Water (H2) _____

Height of Water Pressure Gauge Above Ground Surface (H3) 0 ft, at ground surface

GPmax = [(H1 + H3) (1 psi/ft)] - Ps _____

Minimum Inflation Pressure (MIP) _____

Static Pressure Head (Ps) = (H1 - H2 × 0.43 psi/ft) _____

Packer Inflation Pressure (PIP) = (MIP + Ps + GPmax) _____

Maximum Water Pressure (Pmax) _____

Time	Elapsed Time (min)	Packer Pressure (psi)	Gauge Pressure (psi)	Meter Reading (gal)	Volume of Flow (gal/min)	Remarks
1453	0.0	140	23	6754.0	0	
1453	0.5	140	23	6754.0	0	
1454	1.0	140	23	6754.0	0	
1454	1.5	140	23	6754.0	0	
1455	2.0	140	23	6754.0	0	
1455	2.5	140	23	6754.0	0	
1456	3.0	140	23	6754.0	0	
1458	0.0	140	45	6754.0	0	
1458	0.5	140	45	6754.0	0	
1459	1.0	140	45	6754.0	0	
1459	1.5	140	45	6754.0	0	
1500	2.0	140	45	6754.0	0	
1500	2.5	140	45	6754.0	0	
1501	3.0	140	45	6754.0	0	
1502	0.0	160	45	6754.0	0	
1503	0.5	160	45	6754.0	0	
1503	1.0	160	45	6754.0	0	
1504	1.5	160	45	6754.0	0	
1504	2.0	160	45	6754.0	0	
1505	2.5	160	45	6754.0	0	
1505	3.0	160	45	6754.0	0	

PACKER TEST LOG

Project Name: IR Program Site 09, Allen Harbor Landfill					Hole No.	MW09-20R
Project Number: 29600.32					Test No.	2
Client: NORDIV, NAVFAC					Location:	Site 09
Contractor: A&W Environmental Drilling					Date:	21 March 1995
	Packer System	Water Meter	Water Gauge	Surge Chamber	Driller:	Don Sylvia
Type					Inspector:	D. Acampora
Mfg.					Hole Size:	HX-Core
Model No.					Length of Section:	5 ft

GPmax = (0.566 to 1.0) × H1 _____ Rock Type _____

Computed Max Gauge Pressure: (GPmax) _____ Recovery _____

Computed Internal Friction _____ RQD (%) _____

Depths: (all distances measured from ground surface in feet)

To Top of Rock 70 ft To Top Lower Packer _____

To Bottom of Boring 84.5 ft To Bottom Upper Packer (H1) _____

To Water (H2) _____

Height of Water Pressure Gauge Above Ground Surface (H3) _____

GPmax = [(H1 + H3) (1 psi/ft)] - Ps _____

Minimum Inflation Pressure (MIP) _____

Static Pressure Head (Ps) = (H1 - H2 × 0.43 psi/ft) _____

Packer Inflation Pressure (PIP) = (MIP + Ps + GPmax) _____

Maximum Water Pressure (Pmax) _____

Time	Elapsed Time (min)	Packer Pressure (psi)	Gauge Pressure (psi)	Meter Reading (gal)	Volume of Flow (gal/min)	Remarks
1528	0.0	140	24	6755.6	0	
1528	0.5	140	24	6755.6	0	
1529	1.0	140	24	6755.6	0	
1529	1.5	140	24	6755.6	0	
1530	2.0	140	24	6755.6	0	
1530	2.5	140	24	6755.6	0	
1531	3.0	140	24	6755.6	0	
1533	0.0	140	24	6755.6	0	
1533	0.5	140	24	6755.6	0	
1534	1.0	140	24	6755.6	0	
1534	1.5	140	24	6755.6	0	
1535	2.0	140	24	6755.6	0	
1535	2.5	140	24	6755.6	0	
1536	3.0	140	24	6755.6	0	
1538	0.0	160	45	6755.8	0	
1538	0.5	160	45	6755.8	0	
1539	1.0	160	45	6755.8	0	
1539	1.5	160	45	6755.8	0	
1540	2.0	160	45	6755.8	0	
1540	2.5	160	45	6755.8	0	
1541	3.0	160	45	6755.8	0	

APPENDIX I

PHASE III GROUND-WATER/TIDAL LEVEL MONITORING

Barometric Pressures from the National Weather Service, Providence, R.I.

	E.S.T	Daylight S.T.	Barometric Pressure (in. Hg)	Barometric Pressure (ft. of H2O)	
18 April 1995	852	952	30.035	34.030	
	950	1050	30.035	34.030	
	1051	1151	30.015	34.007	
	1153	1253	30.015	34.007	
	1252	1352	30.005	33.996	
	1352	1452	30	33.990	
	1450	1550	30	33.990	Closest to low
	1554	1654	30.005	33.996	tide time (16:01)
	1652	1752	30.015	34.007	(see tidal hydrograph)
	1754	1854	30.005	33.996	
	1853	1953	30.015	34.007	
	1952	2052	30.02	34.013	
	2053	2153	30.025	34.018	
	2150	2250	30.005	33.996	Closest to high
	2254	2354	29.995	33.984	tide time (23:17)
	2353	53	30.005	33.996	(see tidal hydrograph)
19 April 199	51	151	30.005	33.996	
	150	250	29.985	33.973	
	251	351	29.97	33.956	
	350	450	29.945	33.928	
	450	550	29.93	33.911	
	550	650	29.985	33.973	
	650	750	29.925	33.905	
	750	850	29.9	33.877	
	850	950	29.915	33.894	
	953	1053	29.865	33.837	
	1051	1151	29.825	33.792	
	1151	1251	29.775	33.735	
	1253	1353	29.745	33.701	
	1350	1450	29.725	33.678	
	1453	1553	29.71	33.661	
	1552	1652	29.705	33.656	
	1650	1750	29.695	33.644	
	1752	1852	29.7	33.650	
	1852	1952	29.705	33.656	
	1950	2050	29.725	33.678	
	2052	2152	29.725	33.678	
	2152	2252	29.715	33.667	
	2252	2352	29.72	33.673	
	2350	50	29.745	33.701	
20 April 199	50	150	29.74	33.695	
	150	250	29.755	33.712	
	250	350	29.765	33.724	
	350	450	29.795	33.758	
	450	550	29.8	33.763	
	550	650	29.835	33.803	
	652	752	29.85	33.820	
	750	850	29.855	33.826	
	850	950	29.86	33.831	

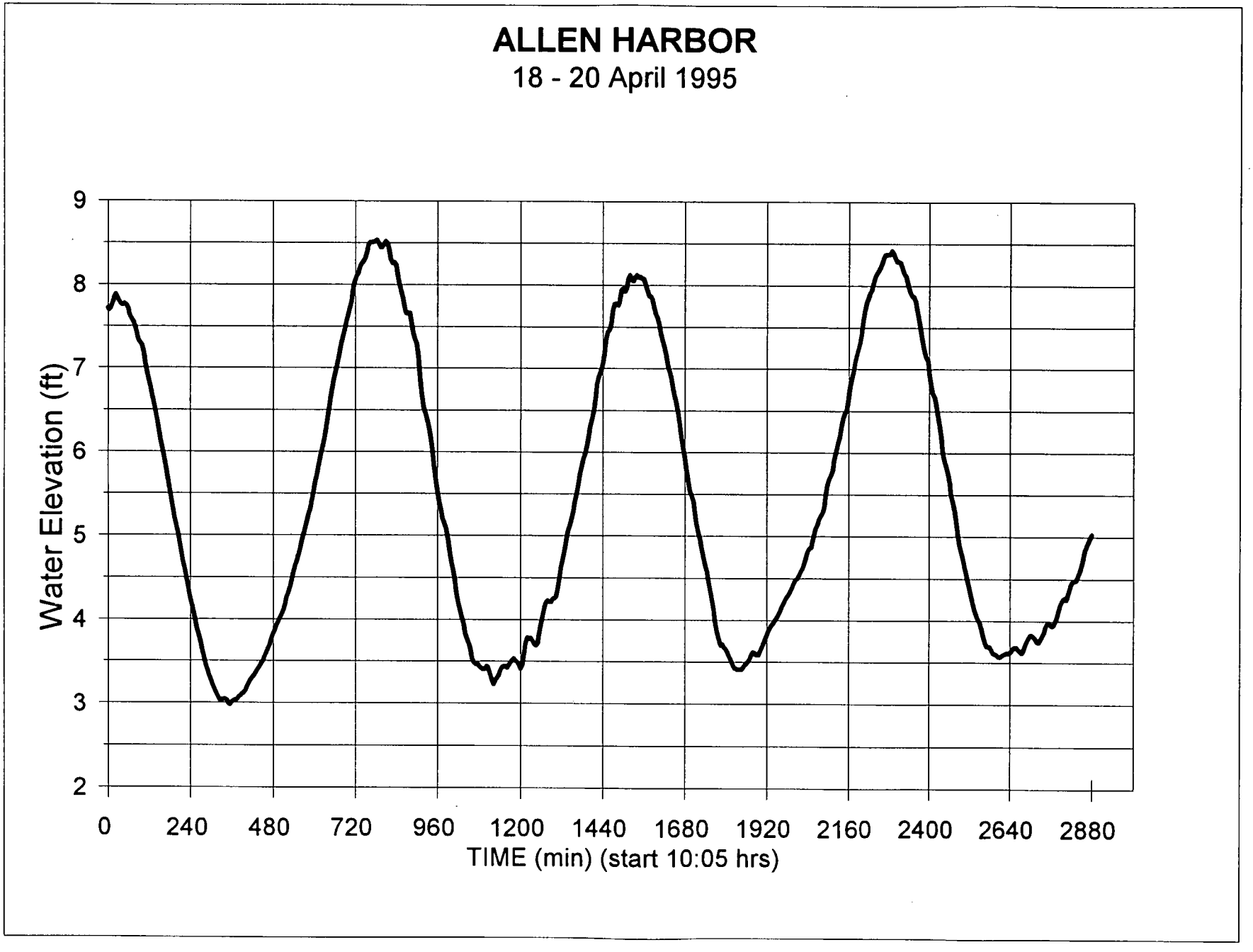
ALLEN HARBOR
18 - 20 April 1995
Water Elevation (ft)
9
8
7
6
5
4
3
2
0
240
480
720
960
1200
1440
1680
1920
2160
2400
2640
2880
TIME (min) (start 10:05 hrs)

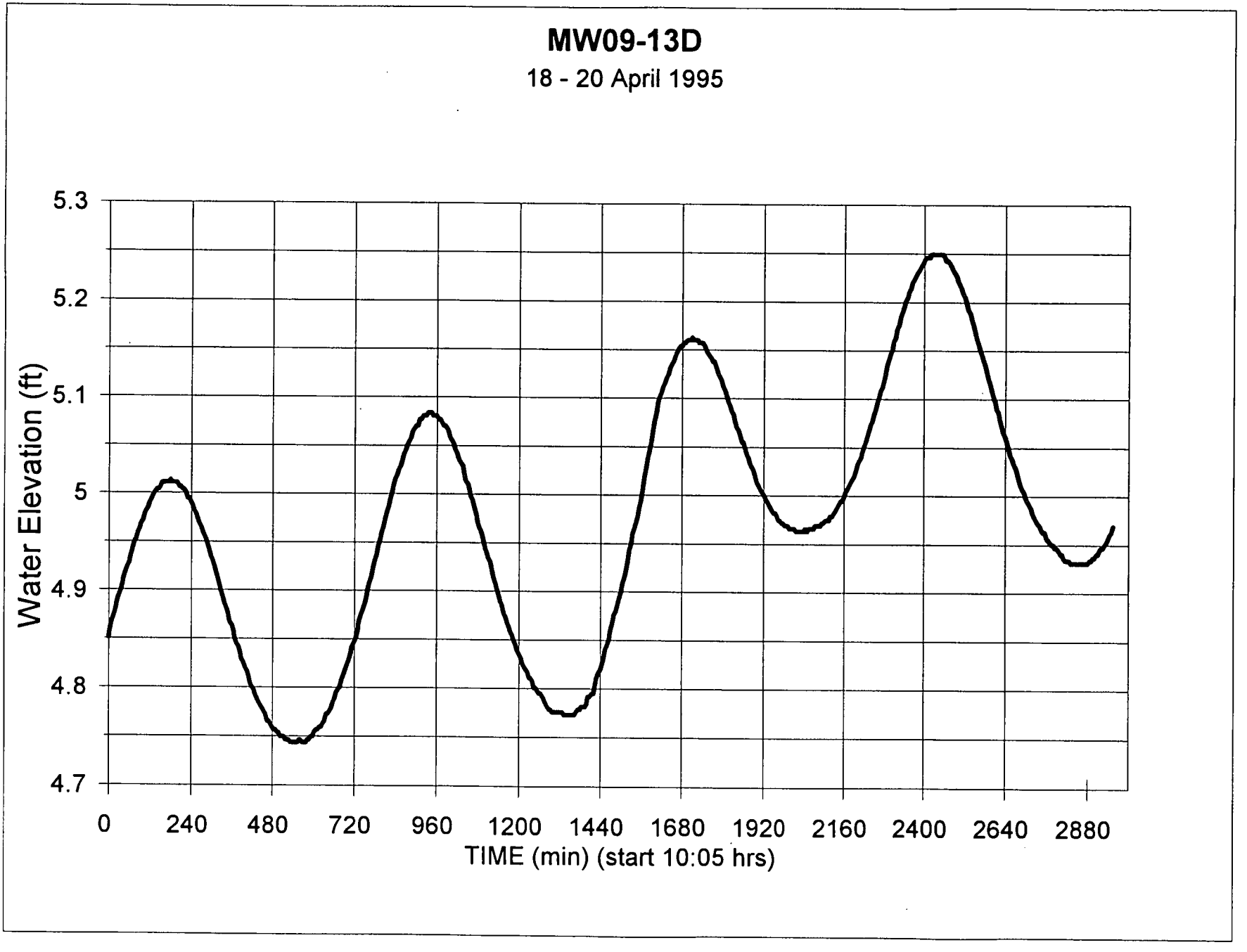
MW09-13D
18 - 20 April 1995
Water Elevation (ft)
5.3
5.2
5.1
5
4.9
4.8
4.7
0
240
480
720
960
1200
1440
1680
1920
2160
2400
2640
2880
TIME (min) (start 10:05 hrs)

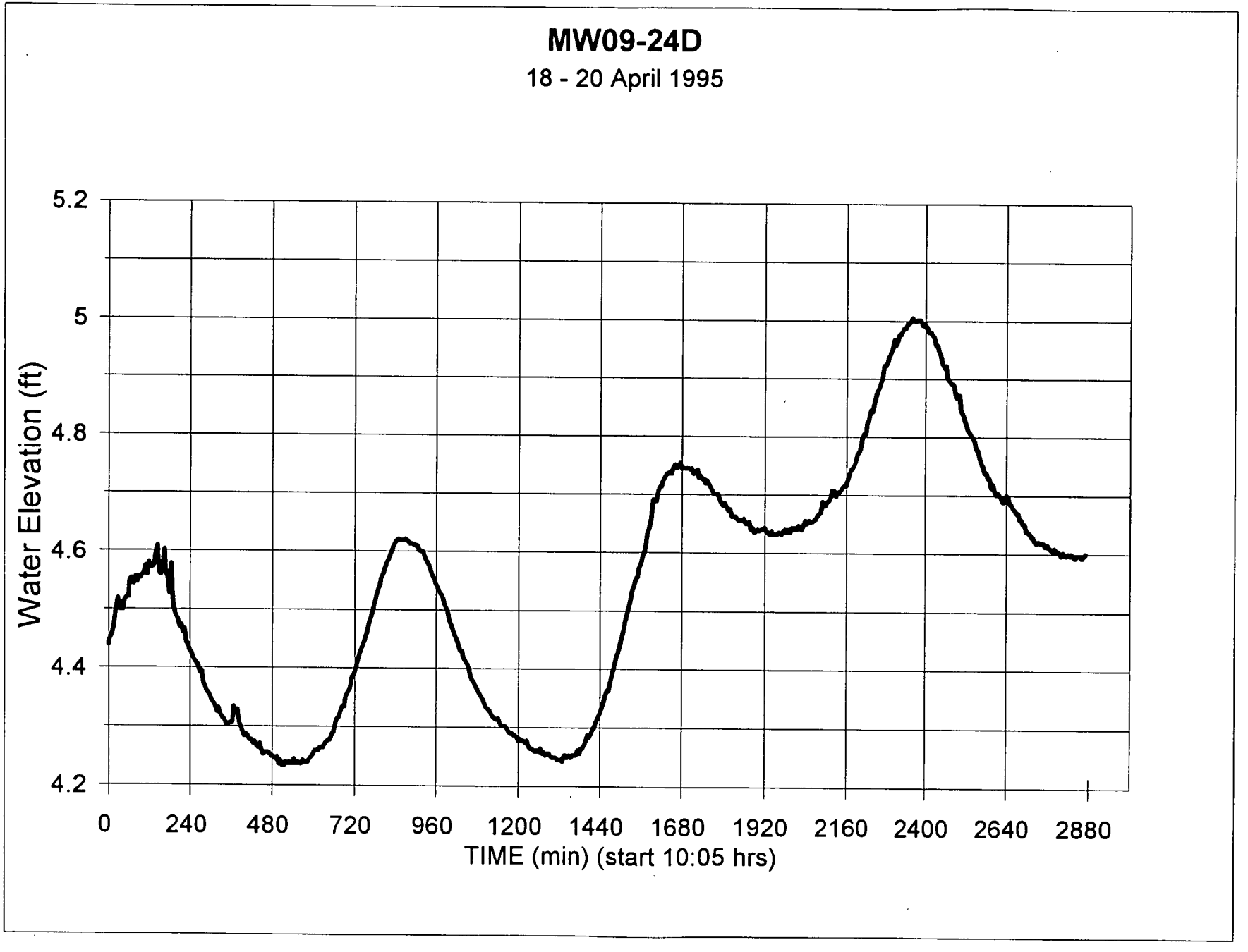
MW09-24D
18 - 20 April 1995
Water Elevation (ft)
5.2
5
4.8
4.6
4.4
4.2
0
240
480
720
960
1200
1440
1680
1920
2160
2400
2640
2880
TIME (min) (start 10:05 hrs)

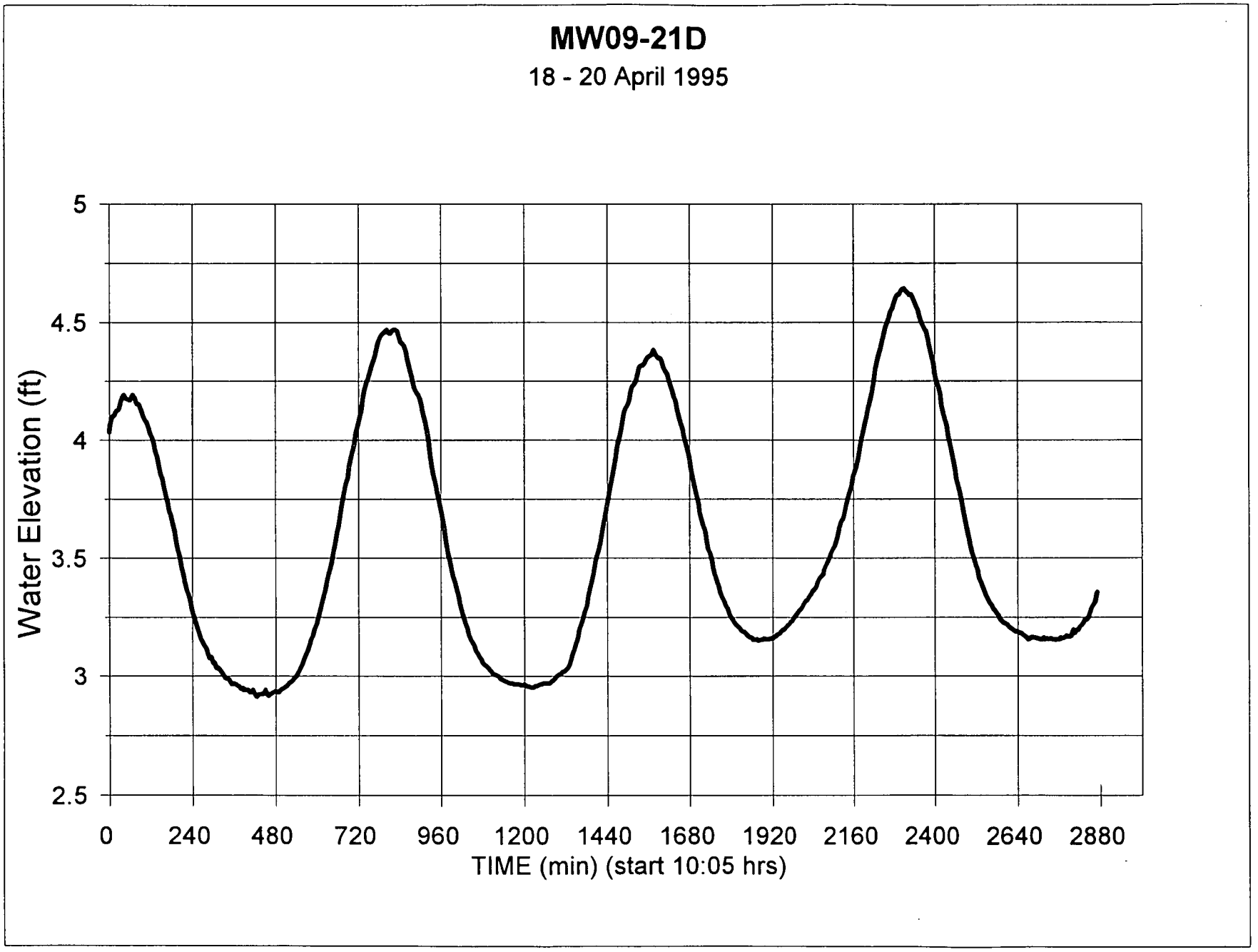
MW09-21D
18 - 20 April 1995
Water Elevation (ft)
5
4.5
4
3.5
3
2.5
0
240
480
720
960
1200
1440
1680
1920
2160
2400
2640
2880
TIME (min) (start 10:05 hrs)

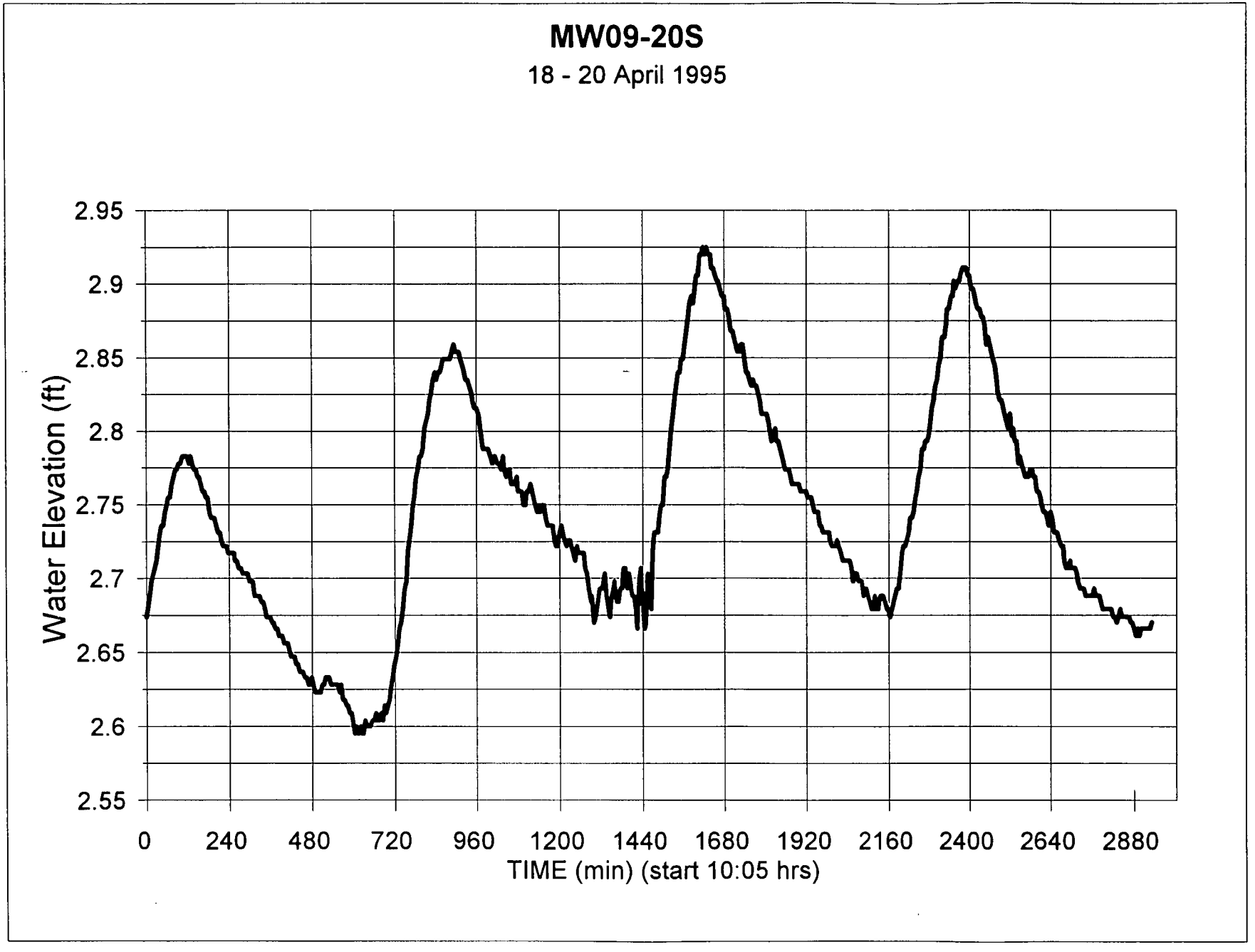
MW09-20S
18 - 20 April 1995
Water Elevation (ft)
2.95
2.9
2.85
2.8
2.75
2.7
2.65
2.6
2.55
0
240
480
720
960
1200
1440
1680
1920
2160
2400
2640
2880
TIME (min) (start 10:05 hrs)

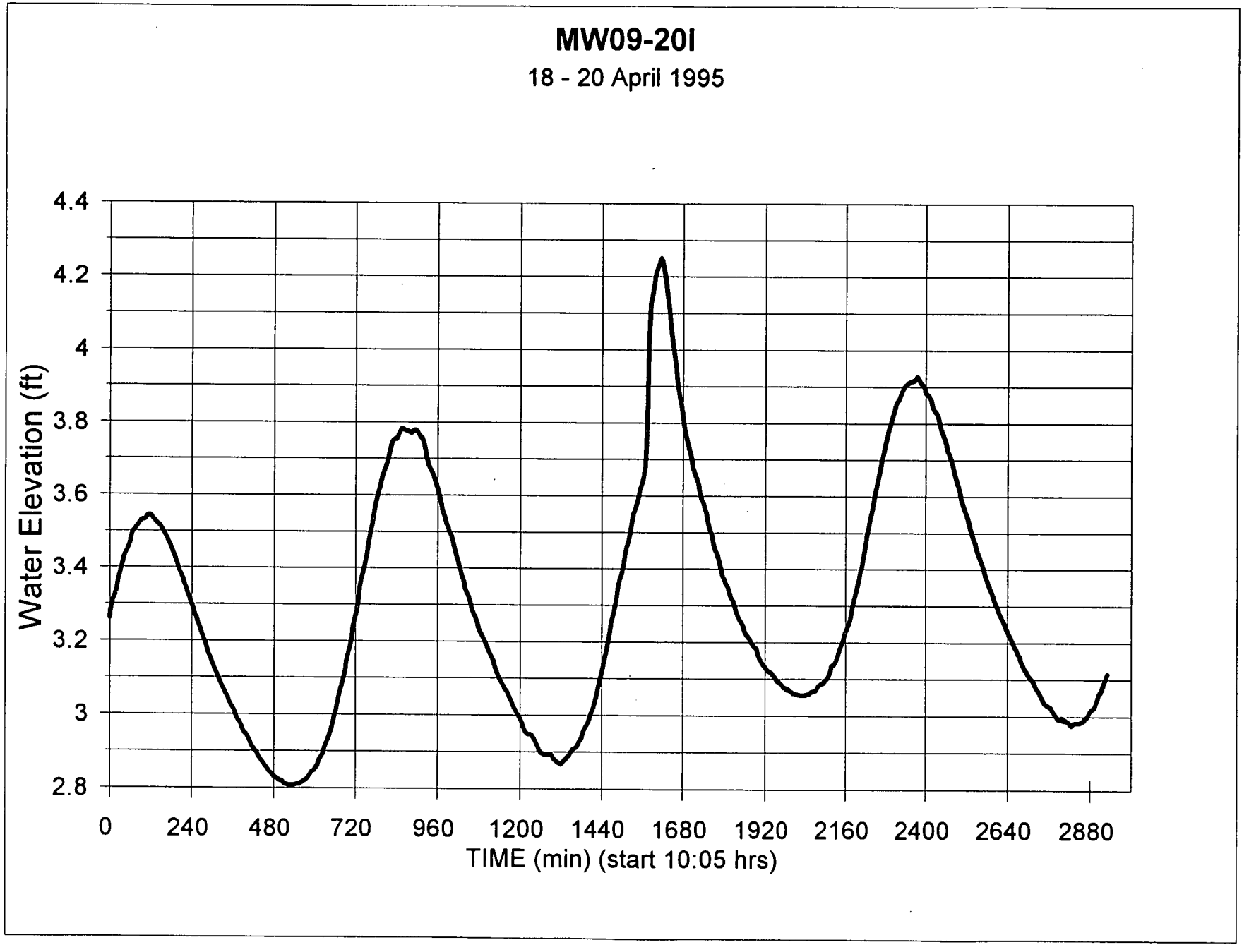
MW09-20I
18 - 20 April 1995
Water Elevation (ft)
4.4
4.2
4
3.8
3.6
3.4
3.2
3
2.8
0
240
480
720
960
1200
1440
1680
1920
2160
2400
2640
2880
TIME (min) (start 10:05 hrs)

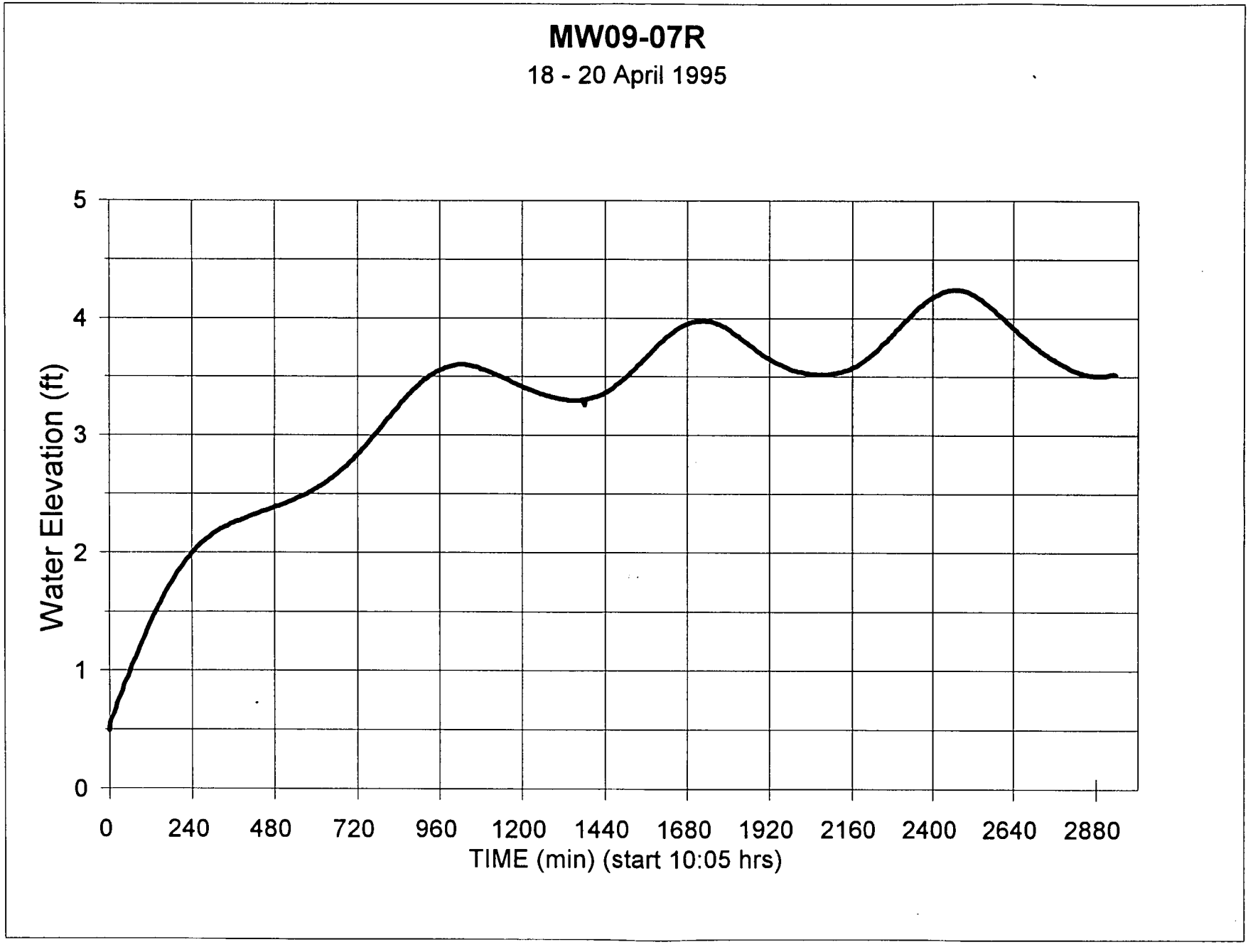
MW09-07R
18 - 20 April 1995
Water Elevation (ft)
0
1
2
3
4
5
0
240
480
720
960
1200
1440
1680
1920
2160
2400
2640
2880
TIME (min) (start 10:05 hrs)

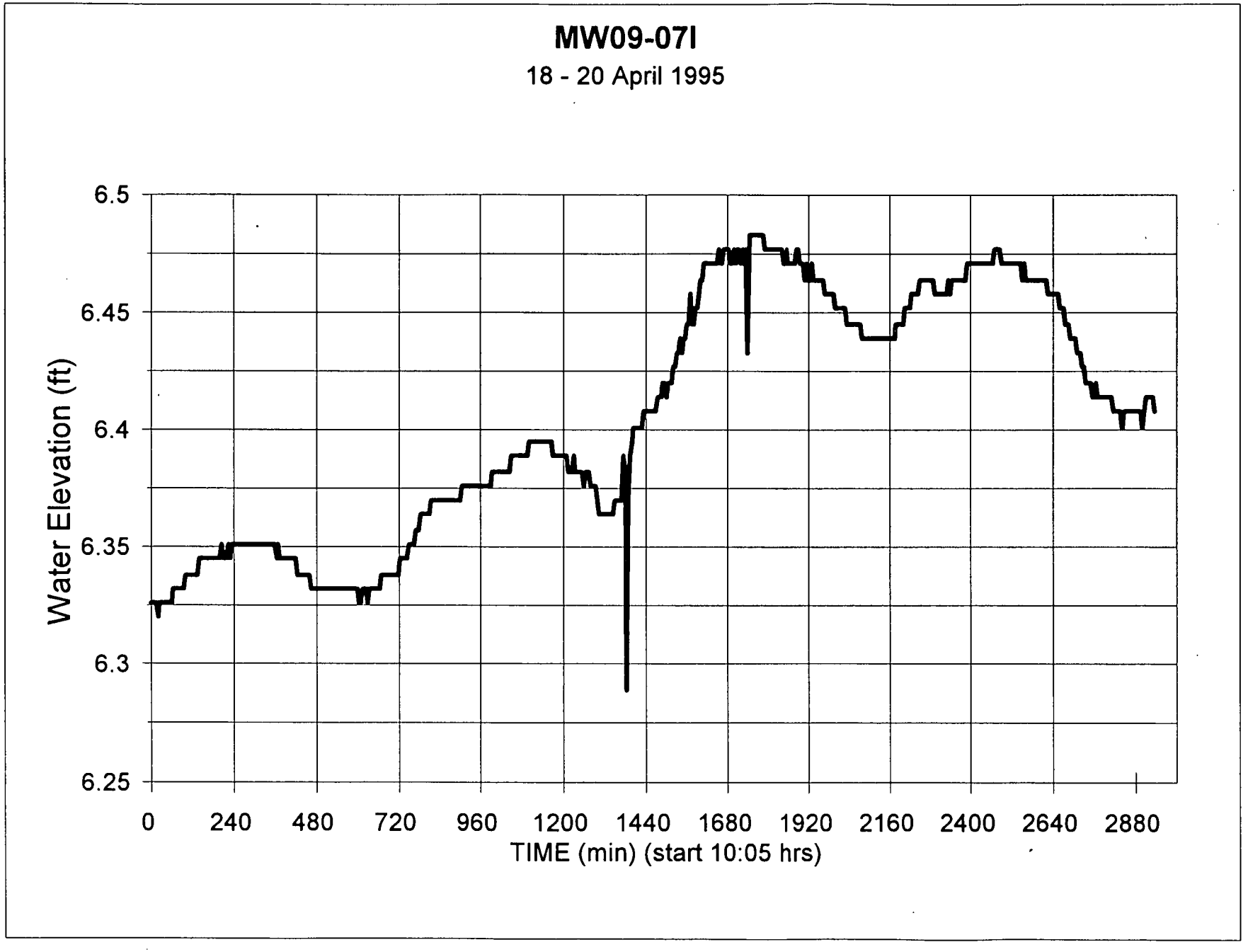
MW09-07I
18 - 20 April 1995
Water Elevation (ft)
6.5
6.45
6.4
6.35
6.3
6.25
0
240
480
720
960
1200
1440
1680
1920
2160
2400
2640
2880
TIME (min) (start 10:05 hrs)

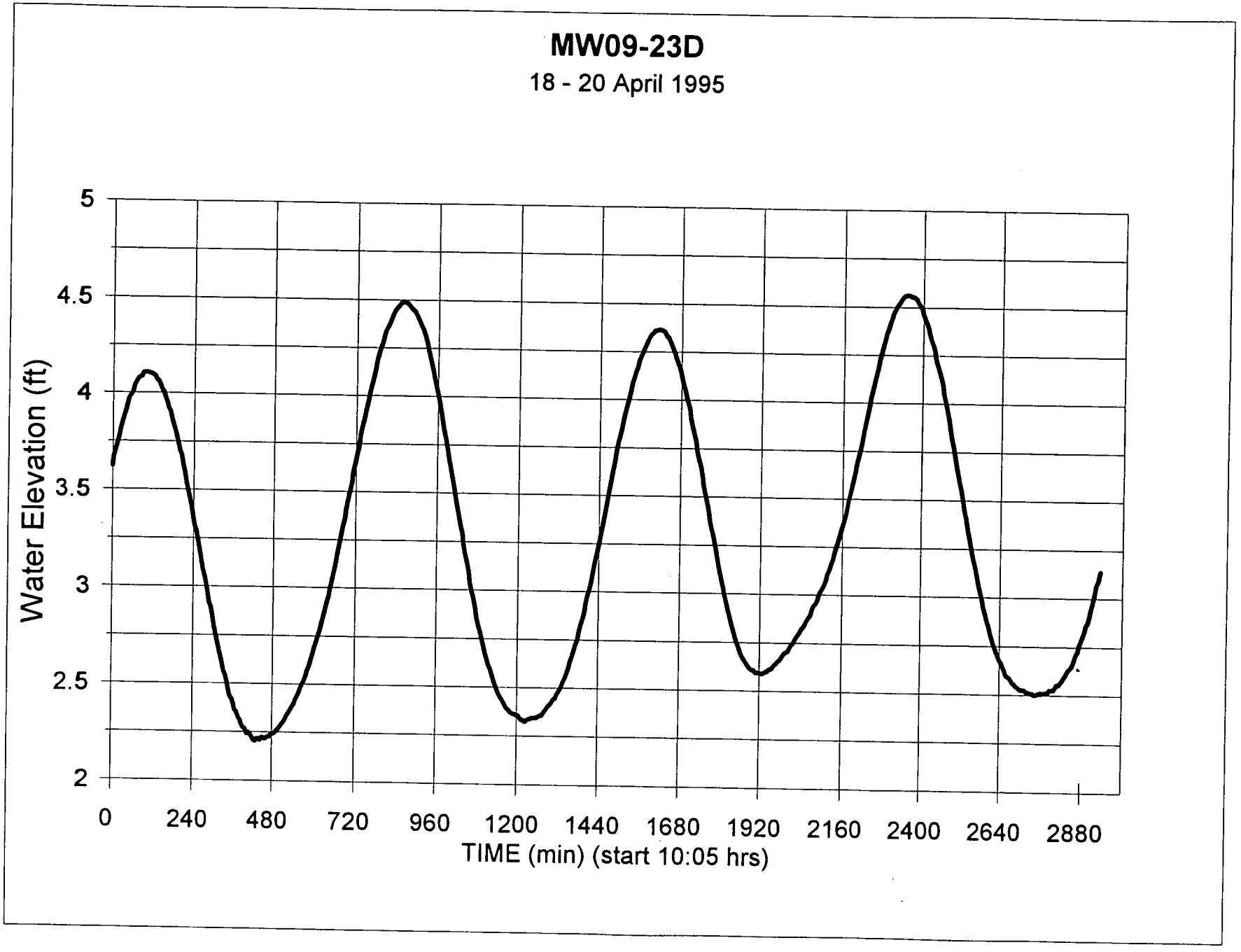
MW09-23D
18 - 20 April 1995
Water Elevation (ft)
5
4.5
4
3.5
3
2.5
2
0
240
480
720
960
1200
1440
1680
1920
2160
2400
2640
2880
TIME (min) (start 10:05 hrs)

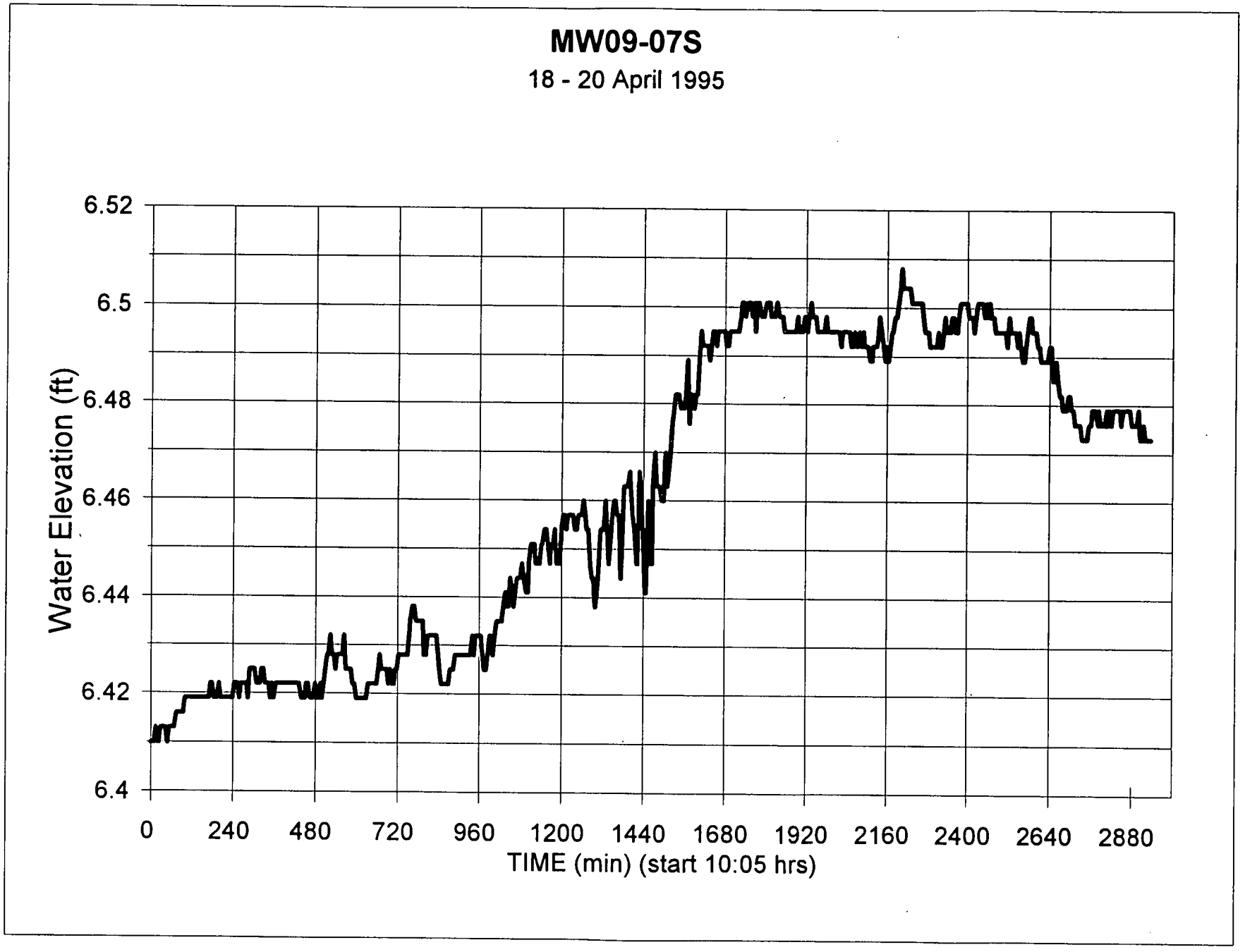
MW09-07S
18 - 20 April 1995
Water Elevation (ft)
6.52
6.5
6.48
6.46
6.44
6.42
6.4
0
240
480
720
960
1200
1440
1680
1920
2160
2400
2640
2880
TIME (min) (start 10:05 hrs)

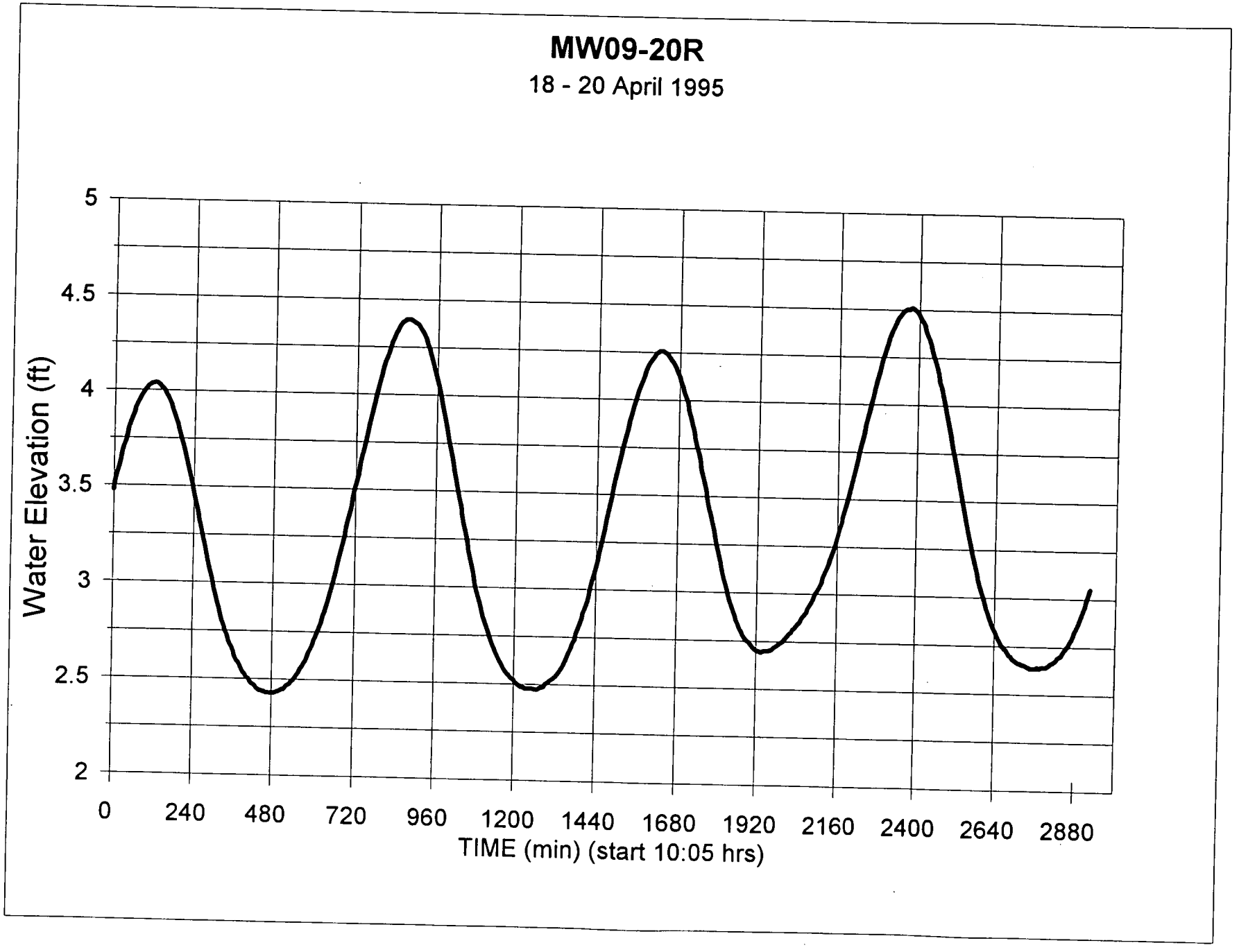
MW09-20R
18 - 20 April 1995
Water Elevation (ft)
5
4.5
4
3.5
3
2.5
2
0
240
480
720
960
1200
1440
1680
1920
2160
2400
2640
2880
TIME (min) (start 10:05 hrs)

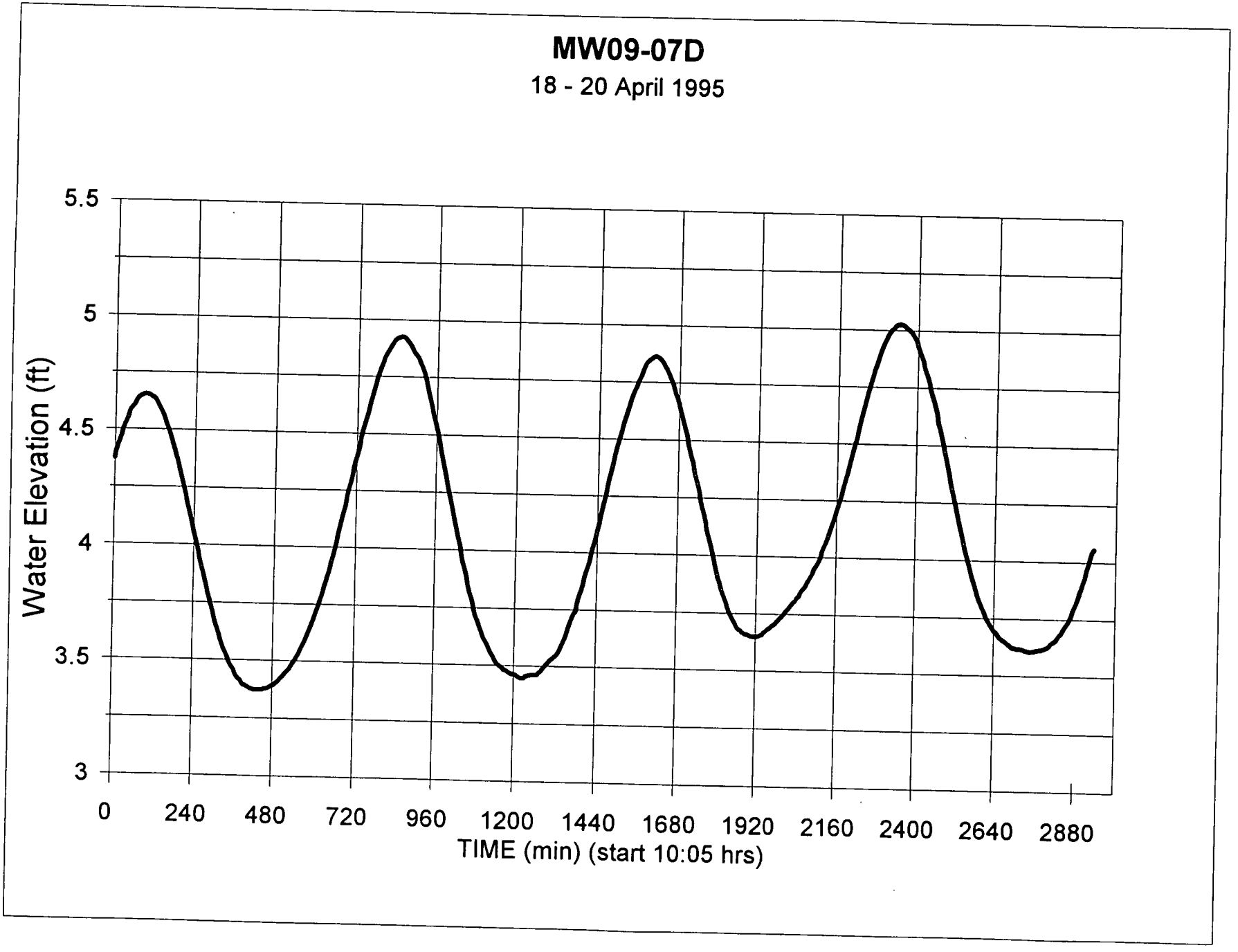
MW09-07D
18 - 20 April 1995
Water Elevation (ft)
5.5
5
4.5
4
3.5
3
0
240
480
720
960
1200
1440
1680
1920
2160
2400
2640
2880
TIME (min) (start 10:05 hrs)

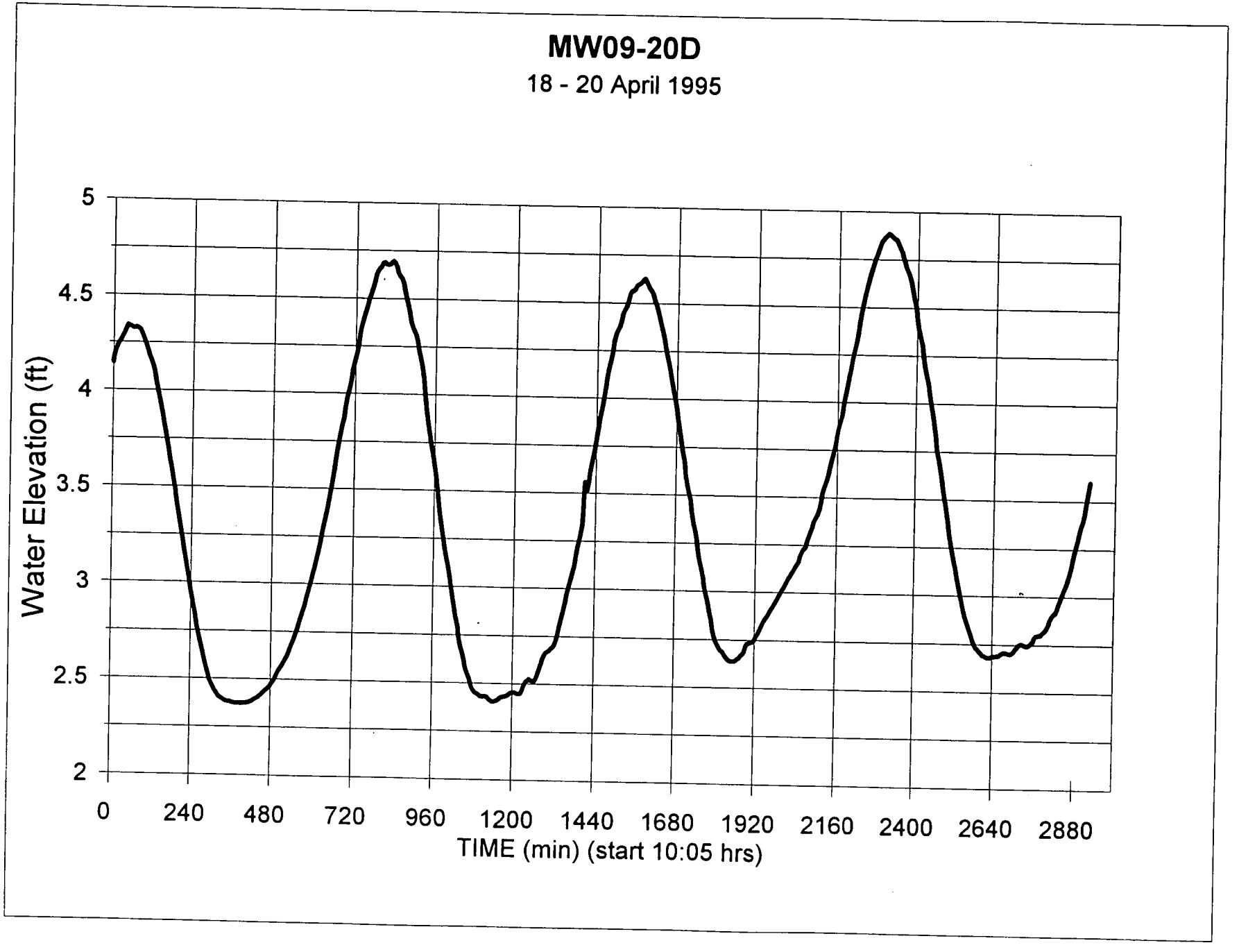
MW09-20D
18 - 20 April 1995
Water Elevation (ft)
5
4.5
4
3.5
3
2.5
2
0
240
480
720
960
1200
1440
1680
1920
2160
2400
2640
2880
TIME (min) (start 10:05 hrs)

APPENDIX J

PHASE III RI GROUND-WATER FLOW MODEL DATA

(TO BE PROVIDED)

APPENDIX K

ANALYTICAL LAB REPORTS—SUBSURFACE SOIL SAMPLES

IEA
An Aquarion Company

200 Monroe Turnpike
Monroe, Connecticut 06468

Phone 203·261·4458
Fax 203·268·5346

March 8, 1995

Mr. Nick Lanney
EA Engineering
2 Commercial Street
Sharon, MA 02067

Dear Mr. Lanney:

Please find enclosed the analytical results of three samples received at our laboratory on February 10, 1995. This report contains sections addressing the following information at a minimum:

- sample summary
- analytical methodology
- state certifications
- definitions of data qualifiers and terminology
- analytical results
- chain-of-custody

IEA Report #3095-0150	Purchase Order #L007326
Project ID: DAVISVILLE, NCBC	

Copies of this analytical report and supporting data are maintained in our files for a minimum of five years unless special arrangements have been made. Unless specifically indicated, all analytical testing was performed at this laboratory location and no portion of the testing was subcontracted.

We appreciate your selection of our services and welcome any questions or suggestions you may have relative to this report. Please contact your customer service representative at (203) 261-4458 for any additional information. Thank you for utilizing our services; we hope you will consider us for your future analytical needs.

I have reviewed and approved the enclosed data for final release.

Very truly yours,

Jeffrey C. Curran
Laboratory Manager

JCC/adj

The samples were analyzed for the parameters listed in the Analytical Summary Table.

METHODOLOGY/DISCUSSION

Volatile Organics - Volatile organics were determined by purge and trap GC/MS using USEPA CLP Protocols, OLM01.9. The instrumentation used was a Tekmar Dynamic Headspace Concentrator interfaced with a Hewlett-Packard Model 5995/5972A GC/MS/DS.

Due to a high target compound concentration, sample SBA44-46 was analyzed as a medium level soil.

Due to a high target compound concentration, samples SBB49-51 and SBC64-66 were analyzed at 1:5 dilution.

RESULTS

The results are presented in the following Tables. Also enclosed are the data packages containing all relevant data.

TABLE VO-1.0
3095-0150
EA ENGINEERING
EPA TCL VOLATILE ORGANICS

Soil

All values are ug/Kg dry weight basis.

Client Sample I.D.	Method Blank	SBB49-51	SBC64-66	Quant. Limits with no Dilution
Lab Sample I.D.	VBLKBE	0150002	0150003	
Method Blank I.D.	VBLKBE	VBLKBE	VBLKBE	
Dilution Factor	1.00	7.25	5.88	
Chloromethane	U	U	U	10
Bromomethane	U	U	U	10
Vinyl Chloride	U	U	U	10
Chloroethane	U	U	U	10
Methylene Chloride	U	18J	14J	10
Acetone	14	590B	1000B	10
Carbon Disulfide	U	U	U	10
1,1-Dichloroethene	U	U	U	10
1,1-Dichloroethane	U	U	U	10
1,2-Dichloroethene (total)	U	U	U	10
Chloroform	U	U	U	10
1,2-Dichloroethane	U	U	U	10
2-Butanone	U	82	U	10
1,1,1-Trichloroethane	U	U	U	10
Carbon Tetrachloride	U	U	U	10
Bromodichloromethane	U	U	U	10
1,2-Dichloropropane	U	U	U	10
cis-1,3-Dichloropropene	U	U	U	10
Trichloroethene	U	U	U	10
Dibromochloromethane	U	U	U	10
1,1,2-Trichloroethane	U	U	U	10
Benzene	U	U	U	10
trans-1,3-Dichloropropene	U	U	U	10
Bromoform	U	U	U	10
4-Methyl-2-Pentanone	U	U	U	10
2-Hexanone	U	U	U	10
Tetrachloroethene	U	U	U	10
1,1,2,2-Tetrachloroethane	U	U	U	10
Toluene	U	U	U	10
Chlorobenzene	U	U	U	10
Ethylbenzene	U	U	U	10
Styrene	U	U	U	10
Xylene (total)	U	U	U	10
Date Received		02/10/95	02/10/95	
Date Extracted	N/A	N/A	N/A	
Date Analyzed	02/17/95	02/17/95	02/17/95	

See Appendix for qualifier definitions
Note: Compound detection limit = quantitation limit x dilution factor

TABLE VO-1.1
3095-0150
EA ENGINEERING
EPA TCL VOLATILE ORGANICS

Soil
Medium

All values are ug/Kg dry weight basis.

Client Sample I.D. Lab Sample I.D. Method Blank I.D. Dilution Factor	Method Blank VBLKDB VBLKDB 1.00	SBA44-46 0150001 VBLKDB 1.47		Quant. Limits with no Dilution
Chloromethane	U	U		1200
Bromomethane	U	U		1200
Vinyl Chloride	U	U		1200
Chloroethane	U	U		1200
Methylene Chloride	U	U		1200
Acetone	U	6200		1200
Carbon Disulfide	U	U		1200
1,1-Dichloroethene	U	U		1200
1,1-Dichloroethane	U	U		1200
1,2-Dichloroethene (total)	U	U		1200
Chloroform	U	U		1200
1,2-Dichloroethane	U	U		1200
2-Butanone	U	4100		1200
1,1,1-Trichloroethane	U	U		1200
Carbon Tetrachloride	U	U		1200
Bromodichloromethane	U	U		1200
1,2-Dichloropropane	U	U		1200
cis-1,3-Dichloropropene	U	U		1200
Trichloroethene	U	U		1200
Dibromochloromethane	U	U		1200
1,1,2-Trichloroethane	U	U		1200
Benzene	U	U		1200
trans-1,3-Dichloropropene	U	U		1200
Bromoform	U	U		1200
4-Methyl-2-Pentanone	420J	U		1200
2-Hexanone	410J	U		1200
Tetrachloroethene	U	U		1200
1,1,2,2-Tetrachloroethane	270J	U		1200
Toluene	U	U		1200
Chlorobenzene	U	U		1200
Ethylbenzene	U	U		1200
Styrene	U	U		1200
Xylene (total)	U	U		1200
Date Received Date Extracted Date Analyzed	 N/A 02/17/95	02/10/95 N/A 02/17/95		

See Appendix for qualifier definitions
Note: Compound detection limit = quantitation limit x dilution factor

TABLE VO-2.0
3095-0150
EA ENGINEERING
MISCELLANEOUS

Sample Identification: Method Blank VBLKBE

CAS#	Compound	RT	Estimated Concentration, ug/Kg
	None detected		

Sample Identification: SBB49-51

CAS#	Compound	RT	Estimated Concentration, ug/Kg
	Unknown siloxane	26.02	300J
556672	Cyclotetrasiloxane,octamethyl	23.15	100JN

Sample Identification: SBC64-66

CAS#	Compound	RT	Estimated Concentration, ug/Kg
67630	2-Propanol	7.02	790JN

Sample Identification: Method Blank VBLKDB

CAS#	Compound	RT	Estimated Concentration, ug/Kg
	None detected		

Sample Identification: SBA44-46

CAS#	Compound	RT	Estimated Concentration, ug/Kg
	None detected		

See Appendix for qualifier definitions.

ORGANICS APPENDIX

U - Indicates that the compound was analyzed for but not detected.

J - Indicates that the compound was analyzed for and determined to be present in the sample. The mass spectrum of the compound meets the identification criteria of the method. The concentration listed is an estimated value, which is less than the specified minimum detection limit but is greater than zero.

B - This flag is used when the analyte is found in the blanks as well as the sample. It indicates possible sample contamination and warns the data user to use caution when applying the results of this analyte.

N - Indicates that the compound was analyzed for but not requested as an analyte. Value will not be listed on tabular result sheet.

S - Estimated due to surrogate outliers.

X - Matrix spike compound.

(1) - Cannot be separated.

(2) - Decomposes to azobenzene. Measured and calibrated as azobenzene.

A - This flag indicates that a TIC is a suspected aldol condensation product.

E - Indicates that it exceeds calibration curve range.

D - This flag identifies all compounds identified in an analysis at a secondary dilution factor.

C - Confirmed by GC/MS.

T - Compound present in TCLP blank.

P - This flag is used for a pesticide/aroclor target analyte when there is a greater than 25 percent difference for detected concentrations between the two GC columns (see Form X).

STATE CERTIFICATIONS

In some instances it may be necessary for environmental data to be reported to a regulatory authority with reference to a certified laboratory. For your convenience, the laboratory identification numbers for the IEA-Connecticut laboratory are provided in the following table. Many states certify laboratories for specific parameters or tests within a category (i.e. method 325.2 for wastewater). The information in the following table indicates the lab is certified in a general category of testing such as drinking water or wastewater analysis. The laboratory should be contacted directly if parameter-specific certification information is required.

IEA-Connecticut
Certification Summary (as of June 1993)

State	Responsible Agency	Certification	Lab Number
Connecticut	Department of Health Services	Drinking Water, Wastewater	PH-0497
Kansas	Department of Health and Environmental Services	Drinking Water, Wastewater/Solid, Hazardous Waste	E-210/E-1185
Massachusetts	Department of Environmental Protection	Potable/Non-Potable Water	CT023
New Hampshire	Department of Environmental Services	Drinking Water, Wastewater	252891
New Jersey	Department of Environmental Protection	Drinking Water, Wastewater	46410
New York	Department of Health	CLP, Drinking Water, Wastewater, Solid/ Hazardous Waste	10602
North Carolina	Division of Environmental Management	Wastewater	388
Rhode Island	Department of Health	Chemistry...Non-Potable Water and Wastewater	A43
California	Department of Health Services	Hazardous Waste	1778

30950-0150
EA ENGINEERING
SAMPLE SUMMARY

CLIENT ID	LAB ID	MATRIX	DATE COLLECTED	DATE RECEIVED
SBA44-46	0150001	SOIL	02/08/95	02/10/95
SBB49-51	0150002	SOIL	02/08/95	02/10/95
SBC64-66	0150003	SOIL	02/09/95	02/10/95

IEA, INC.
ANALYTICAL SUMMARY

EA ENGINEERING
DAVISVILLE,NCBC
3095-0150

#SAMPLES	MATRIX	#REPS	DESCRIPTION
3	SOIL	1	TARGET COMPOUND VOLS + TICS

SAMPLE IDs : SBC64-66, SBA44-46, SBB49-51

IEA
An Aquarion Company

200 Monroe Turnpike
Monroe, Connecticut 06468

Phone 203·261·4458
Fax 203·268·5346

March 6, 1995

Mr. Nick Lanney
EA Engineering
2 Commercial Street
Sharon, MA 02067

Dear Mr. Lanney:

Please find enclosed the analytical results of eight samples received at our laboratory on February 2, 3 and 7, 1995. This report contains sections addressing the following information at a minimum:

- sample summary
- analytical methodology
- state certifications
- definitions of data qualifiers and terminology
- analytical results
- chain-of-custody

IEA Report #3095-0118	Purchase Order #L007326
Project ID: DAVISVILLE,NCBC	

Copies of this analytical report and supporting data are maintained in our files for a minimum of five years unless special arrangements have been made. Unless specifically indicated, all analytical testing was performed at this laboratory location and no portion of the testing was subcontracted.

We appreciate your selection of our services and welcome any questions or suggestions you may have relative to this report. Please contact your customer service representative at (203) 261-4458 for any additional information. Thank you for utilizing our services; we hope you will consider us for your future analytical needs.

I have reviewed and approved the enclosed data for final release.

Very truly yours,

Jeffrey C. Curran
Laboratory Manager

JCC/adj

The samples were analyzed for the parameters listed in the Analytical Summary Table.

METHODOLOGY/DISCUSSION

Volatile Organics - Volatile organics were determined by purge and trap GC/MS using USEPA CLP Protocols, OLM01.9. The instrumentation used was a Tekmar Dynamic Headspace Concentrator interfaced with a Hewlett-Packard Model 5995/5972A GC/MS/DS.

RESULTS

The results are presented in the following Tables. Also enclosed are the data packages containing all relevant data.

Aqueous

TABLE VO-1.0
3095-0118
EA ENGINEERING
EPA TCL VOLATILE ORGANICS

All values are ug/L.

Client Sample I.D.	Method Blank	TB 020195	SOURCE WATER #1	Quant. Limits with no Dilution
Lab Sample I.D.	VBLKDX	0118003	0118005	
Method Blank I.D.	VBLKDX	VBLKDX	VBLKDX	
Dilution Factor	1.00	1.00	1.00	
Chloromethane	U	U	U	10
Bromomethane	U	U	U	10
Vinyl Chloride	U	U	U	10
Chloroethane	U	U	U	10
Methylene Chloride	U	U	U	10
Acetone	U	U	U	10
Carbon Disulfide	U	U	U	10
1,1-Dichloroethene	U	U	U	10
1,1-Dichloroethane	U	U	U	10
1,2-Dichloroethene (total)	U	U	U	10
Chloroform	U	U	U	10
1,2-Dichloroethane	U	U	U	10
2-Butanone	U	U	U	10
1,1,1-Trichloroethane	U	U	U	10
Carbon Tetrachloride	U	U	U	10
Bromodichloromethane	U	U	U	10
1,2-Dichloropropane	U	U	U	10
cis-1,3-Dichloropropene	U	U	U	10
Trichloroethene	U	U	U	10
Dibromochloromethane	U	U	U	10
1,1,2-Trichloroethane	U	U	U	10
Benzene	U	U	U	10
trans-1,3-Dichloropropene	U	U	U	10
Bromoform	U	U	U	10
4-Methyl-2-Pentanone	U	U	U	10
2-Hexanone	U	U	U	10
Tetrachloroethene	U	U	U	10
1,1,2,2-Tetrachloroethane	U	U	U	10
Toluene	U	U	U	10
Chlorobenzene	U	U	U	10
Ethylbenzene	U	U	U	10
Styrene	U	U	U	10
Xylene (total)	U	U	U	10
Date Received		02/02/95	02/02/95	
Date Extracted	N/A	N/A	N/A	
Date Analyzed	02/03/95	02/03/95	02/03/95	

See Appendix for qualifier definitions
Note: Compound detection limit = quantitation limit x dilution factor

Aqueous

TABLE VO-1.1
3095-0118
EA ENGINEERING
EPA TCL VOLATILE ORGANICS

All values are ug/L.

Client Sample I.D.	Method Blank	09SB-FB-01		Quant. Limits with no Dilution
Lab Sample I.D.	VBLKDY	0118004		
Method Blank I.D.	VBLKDY	VBLKDY		
Dilution Factor	1.00	1.00		
Chloromethane	U	U		10
Bromomethane	U	U		10
Vinyl Chloride	U	U		10
Chloroethane	U	U		10
Methylene Chloride	U	U		10
Acetone	U	U		10
Carbon Disulfide	U	U		10
1,1-Dichloroethene	U	U		10
1,1-Dichloroethane	U	U		10
1,2-Dichloroethene (total)	U	U		10
Chloroform	U	U		10
1,2-Dichloroethane	U	U		10
2-Butanone	U	U		10
1,1,1-Trichloroethane	U	U		10
Carbon Tetrachloride	U	U		10
Bromodichloromethane	U	U		10
1,2-Dichloropropane	U	U		10
cis-1,3-Dichloropropene	U	U		10
Trichloroethene	U	U		10
Dibromochloromethane	U	U		10
1,1,2-Trichloroethane	U	U		10
Benzene	U	U		10
trans-1,3-Dichloropropene	U	U		10
Bromoform	U	U		10
4-Methyl-2-Pentanone	U	U		10
2-Hexanone	U	U		10
Tetrachloroethene	U	U		10
1,1,2,2-Tetrachloroethane	U	U		10
Toluene	U	U		10
Chlorobenzene	U	U		10
Ethylbenzene	U	U		10
Styrene	U	U		10
Xylene (total)	U	U		10
Date Received		02/02/95		
Date Extracted	N/A	N/A		
Date Analyzed	02/06/95	02/06/95		

See Appendix for qualifier definitions
Note: Compound detection limit = quantitation limit x dilution factor

TABLE VO-1.2 Soil
3095-0118
EA ENGINEERING
EPA TCL VOLATILE ORGANICS

All values are ug/Kg dry weight basis.

Client Sample I.D.	Method Blank	09SB-07I-17.0-19.0	09SB-07I-15.0-17.0	Quant. Limits with no Dilution
Lab Sample I.D.	VBLKB6	0118001	0118002	
Method Blank I.D.	VBLKB6	VBLKB6	VBLKB6	
Dilution Factor	1.00	1.52	1.18	
Chloromethane	U	U	U	10
Bromomethane	U	U	U	10
Vinyl Chloride	U	U	U	10
Chloroethane	U	U	U	10
Methylene Chloride	U	10	2J	10
Acetone	14	39B	41B	10
Carbon Disulfide	U	U	U	10
1,1-Dichloroethene	U	U	U	10
1,1-Dichloroethane	U	U	U	10
1,2-Dichloroethene (total)	U	U	U	10
Chloroform	U	U	U	10
1,2-Dichloroethane	U	U	U	10
2-Butanone	U	U	14	10
1,1,1-Trichloroethane	U	U	U	10
Carbon Tetrachloride	U	U	U	10
Bromodichloromethane	U	U	U	10
1,2-Dichloropropane	U	U	U	10
cis-1,3-Dichloropropene	U	U	U	10
Trichloroethene	U	U	U	10
Dibromochloromethane	U	U	U	10
1,1,2-Trichloroethane	U	U	U	10
Benzene	U	48	U	10
trans-1,3-Dichloropropene	U	U	U	10
Bromoform	U	U	U	10
4-Methyl-2-Pentanone	U	U	U	10
2-Hexanone	U	U	U	10
Tetrachloroethene	U	U	U	10
1,1,2,2-Tetrachloroethane	U	U	U	10
Toluene	U	17	U	10
Chlorobenzene	U	2J	U	10
Ethylbenzene	U	93	U	10
Styrene	U	U	U	10
Xylene (total)	U	410	2J	10
Date Received		02/02/95	02/02/95	
Date Extracted	N/A	N/A	N/A	
Date Analyzed	02/06/95	02/06/95	02/06/95	

See Appendix for qualifier definitions
Note: Compound detection limit = quantitation limit x dilution factor

TABLE VO-1.3
3095-0118
EA ENGINEERING
EPA TCL VOLATILE ORGANICS

Soil

All values are ug/Kg dry weight basis.

Client Sample I.D.	09-SB14 I-10-12	09-SB14 I-29-31		Quant. Limits with no Dilution
Lab Sample I.D.	0118006	0118007		
Method Blank I.D.	VBLKB6	VBLKB6		
Dilution Factor	1.11	1.23		
Chloromethane	U	U		10
Bromomethane	U	U		10
Vinyl Chloride	U	U		10
Chloroethane	U	U		10
Methylene Chloride	U	2J		10
Acetone	76B	17B		10
Carbon Disulfide	2J	U		10
1,1-Dichloroethene	U	U		10
1,1-Dichloroethane	U	U		10
1,2-Dichloroethene (total)	U	2J		10
Chloroform	U	U		10
1,2-Dichloroethane	U	U		10
2-Butanone	24	U		10
1,1,1-Trichloroethane	U	U		10
Carbon Tetrachloride	U	U		10
Bromodichloromethane	U	U		10
1,2-Dichloropropane	U	U		10
cis-1,3-Dichloropropene	U	U		10
Trichloroethene	U	U		10
Dibromochloromethane	U	U		10
1,1,2-Trichloroethane	U	U		10
Benzene	U	1J		10
trans-1,3-Dichloropropene	U	U		10
Bromoform	U	U		10
4-Methyl-2-Pentanone	U	U		10
2-Hexanone	U	U		10
Tetrachloroethene	U	U		10
1,1,2,2-Tetrachloroethane	U	U		10
Toluene	U	48		10
Chlorobenzene	U	U		10
Ethylbenzene	U	9		10
Styrene	U	U		10
Xylene (total)	U	53		10
Date Received	02/03/95	02/03/95		
Date Extracted	N/A	N/A		
Date Analyzed	02/06/95	02/06/95		

See Appendix for qualifier definitions
Note: Compound detection limit = quantitation limit x dilution factor

TABLE VO-1.4
3095-0118
EA ENGINEERING
EPA TCL VOLATILE ORGANICS

Soil

All values are ug/Kg dry weight basis.

Client Sample I.D.	Method Blank	SB-MW09-14 D-39.0-41.		Quant. Limits with no Dilution
Lab Sample I.D.	VBLKBA	0118008		
Method Blank I.D.	VBLKBA	VBLKBA		
Dilution Factor	1.00	1.30		
Chloromethane	U	U		10
Bromomethane	U	U		10
Vinyl Chloride	U	47		10
Chloroethane	U	U		10
Methylene Chloride	U	8J		10
Acetone	11	81B		10
Carbon Disulfide	U	U		10
1,1-Dichloroethene	U	U		10
1,1-Dichloroethane	U	U		10
1,2-Dichloroethene (total)	U	87		10
Chloroform	U	U		10
1,2-Dichloroethane	U	4J		10
2-Butanone	U	U		10
1,1,1-Trichloroethane	U	U		10
Carbon Tetrachloride	U	U		10
Bromodichloromethane	U	U		10
1,2-Dichloropropane	U	U		10
cis-1,3-Dichloropropene	U	U		10
Trichloroethene	U	2J		10
Dibromochloromethane	U	U		10
1,1,2-Trichloroethane	U	U		10
Benzene	U	8J		10
trans-1,3-Dichloropropene	U	U		10
Bromoform	U	U		10
4-Methyl-2-Pentanone	U	14		10
2-Hexanone	U	26		10
Tetrachloroethene	U	U		10
1,1,2,2-Tetrachloroethane	U	U		10
Toluene	U	180		10
Chlorobenzene	U	U		10
Ethylbenzene	U	U		10
Styrene	U	U		10
Xylene (total)	U	U		10
Date Received		02/07/95		
Date Extracted	N/A	N/A		
Date Analyzed	02/13/95	02/13/95		

See Appendix for qualifier definitions
Note: Compound detection limit = quantitation limit x dilution factor

TABLE VO-2.0
3095-0118
EA ENGINEERING
VOLATILE TENTATIVELY IDENTIFIED COMPOUNDS

Sample Identification: Method Blank VBLKDX

CAS#	Compound	RT	Estimated Concentration, ug/L
	None detected		

Sample Identification: TB 020195

CAS#	Compound	RT	Estimated Concentration, ug/L
	None detected		

Sample Identification: SOURCE WATER #1

CAS#	Compound	RT	Estimated Concentration, ug/L
	None detected		

Sample Identification: Method Blank VBLKDY

CAS#	Compound	RT	Estimated Concentration, ug/L
	None detected		

Sample Identification: 09SB-FB-01

CAS#	Compound	RT	Estimated Concentration, ug/L
	None detected		

See Appendix for qualifier definitions.

TABLE VO-2.1
3095-0118
EA ENGINEERING
VOLATILE TENTATIVELY IDENTIFIED COMPOUNDS

Sample Identification: Method Blank VBLKB6

CAS#	Compound	RT	Estimated Concentration, ug/Kg
	None detected		

Sample Identification: 09SB-07I-17.0-19.0

CAS#	Compound	RT	Estimated Concentration, ug/Kg
	Unknown C_3 alkylbenzene	24.14	740J
	Unknown	14.44	660J
	Unknown C_3 alkylbenzene	23.50	530J
	Unknown cycloalkane	19.36	440J
	Unknown	21.10	440J
	Unknown brnached alkane	20.02	410J
	Unknown C_4 alkylbenzene	24.66	360J
	Unknown C_3 alkylbenzene	23.39	330J
	Unknown branched alkane	22.70	330J
	Unknown branched cycloalkane	22.31	310J

Sample Identification: 09SB-07I-15.0-17.0

CAS#	Compound	RT	Estimated Concentration, ug/Kg
	Unknown branched alkane	19.97	43J
	Unknown branched cycloalkane	21.07	36J
	Unknown branched alkane	20.25	35J
	Unknown branched cycloalkane	22.29	27J
	Unknown branched cycloalkane	19.33	26J
	Unknown branched alkane	21.76	17J
	Unknown branched alkane	22.59	17J
	Unknown	24.39	17J
	Unknown branched alkane	19.00	16J
	Unknown	23.50	15J

See Appendix for qualifier definitions.

TABLE VO-2.2
3095-0118
EA ENGINEERING
VOLATILE TENTATIVELY IDENTIFIED COMPOUNDS

Sample Identification: 09-SB14I-10-12

CAS#	Compound	RT	Estimated Concentration, ug/Kg
	Unknown branched cycloalkane	22.26	260J
	Unknown branched cycloalkane	23.47	230J
	Unknown branched alkene	23.06	220J
	Unknown branched alkane	24.00	190J
	Unknown	21.68	170J
	Unknown	24.35	170J
	Unknown branched alkane	22.01	150J
	Unknown	22.15	130J
	Unknown	24.55	130J
	Unknown branched alkane	22.56	120J

Sample Identification: 09-SB14I-29-31

CAS#	Compound	RT	Estimated Concentration, ug/Kg
	Unknown C_3 alkylbenzene	23.39	12J
	Unknown C_3 alkylbenzene	23.52	12J
	Unknown	26.37	11J
	Unknown C_4 alkylbenzene	24.68	10J
	Unknown	14.44	10J
	Unknown siloxane	25.93	8J
	Unknown C_3 alkylbenzene	24.16	8J
	Unknown	27.20	8J
21368683	Bicyclo[2.2.1]heptan-2-one,1,7,7-	27.58	8JN
	Unknown	25.21	7J

Sample Identification: Method Blank VBLKBA

CAS#	Compound	RT	Estimated Concentration, ug/Kg
	None detected		

See Appendix for qualifier definitions.

TABLE VO-2.3
3095-0118
EA ENGINEERING
VOLATILE TENTATIVELY IDENTIFIED COMPOUNDS

Sample Identification: SB-MW09-14D-39.0-41.0

CAS#	Compound	RT	Estimated Concentration, ug/Kg
	Unknown	21.07	16J
	Unknown siloxane	26.01	14J
	Unknown alkane	25.54	12J
	Unknown	20.74	12J
	Unknown	26.45	7J

See Appendix for qualifier definitions.

ORGANICS APPENDIX

U - Indicates that the compound was analyzed for but not detected.

J - Indicates that the compound was analyzed for and determined to be present in the sample. The mass spectrum of the compound meets the identification criteria of the method. The concentration listed is an estimated value, which is less than the specified minimum detection limit but is greater than zero.

B - This flag is used when the analyte is found in the blanks as well as the sample. It indicates possible sample contamination and warns the data user to use caution when applying the results of this analyte.

N - Indicates that the compound was analyzed for but not requested as an analyte. Value will not be listed on tabular result sheet.

S - Estimated due to surrogate outliers.

X - Matrix spike compound.

(1) - Cannot be separated.

(2) - Decomposes to azobenzene. Measured and calibrated as azobenzene.

A - This flag indicates that a TIC is a suspected aldol condensation product.

E - Indicates that it exceeds calibration curve range.

D - This flag identifies all compounds identified in an analysis at a secondary dilution factor.

C - Confirmed by GC/MS.

T - Compound present in TCLP blank.

P - This flag is used for a pesticide/aroclor target analyte when there is a greater than 25-percent difference for detected concentrations between the two GC columns (see Form X).

STATE CERTIFICATIONS

In some instances it may be necessary for environmental data to be reported to a regulatory authority with reference to a certified laboratory. For your convenience, the laboratory identification numbers for the IEA-Connecticut laboratory are provided in the following table. Many states certify laboratories for specific parameters or tests within a category (i.e. method 325.2 for wastewater). The information in the following table indicates the lab is certified in a general category of testing such as drinking water or wastewater analysis. The laboratory should be contacted directly if parameter-specific certification information is required.

IEA-Connecticut
Certification Summary (as of June 1993)

State	Responsible Agency	Certification	Lab Number
Connecticut	Department of Health Services	Drinking Water, Wastewater	PH-0497
Kansas	Department of Health and Environmental Services	Drinking Water, Wastewater/Solid, Hazardous Waste	E-210/E-1185
Massachusetts	Department of Environmental Protection	Potable/Non-Potable Water	CT023
New Hampshire	Department of Environmental Services	Drinking Water, Wastewater	252891
New Jersey	Department of Environmental Protection	Drinking Water, Wastewater	46410
New York	Department of Health	CLP, Drinking Water, Wastewater, Solid/ Hazardous Waste	10602
North Carolina	Division of Environmental Management	Wastewater	388
Rhode Island	Department of Health	Chemistry...Non-Potable Water and Wastewater	A43
California	Department of Health Services	Hazardous Waste	1778

30950-0118
EA ENGINEERING
SAMPLE SUMMARY

CLIENT ID	LAB ID	MATRIX	DATE COLLECTED	DATE RECEIVED
09SB-07I-17.0-19.0	0118001	SOIL	01/31/95	02/02/95
09SB-07I-15.0-17.0	0118002	SOIL	01/31/95	02/02/95
TB 020195	0118003	LIQUID		02/02/95
09SB-FB-01	0118004	LIQUID	02/01/95	02/02/95
SOURCE WATER #1	0118005	LIQUID	02/01/95	02/02/95
09-SB14I-10-12	0118006	SOIL	02/01/95	02/03/95
09-SB14I-29-31	0118007	SOIL	02/02/95	02/03/95
SB-MW09-14D-39.0-41.	0118008	SOIL	02/03/95	02/07/95

IEA, INC.
ANALYTICAL SUMMARY

EA ENGINEERING
DAVISVILLE.NCBC
3095-0118

#SAMPLES	MATRIX	#REPS	DESCRIPTION
5	SOIL	1	TARGET COMPOUND VOLS + TICS
SAMPLE IDs : 09SB-07I-17.0-19.0, 09SB-07I-15.0-17.0, : SB-MW09-14D-39.0-41., 09-SB14I-29-31, : 09-SB14I-10-12			
1	AQUEOUS	1	TARGET COMPOUND VOLS + TICS
SAMPLE IDs : SOURCE WATER #1			
1 QC-FB	AQUEOUS	1	FOR FOLLOWING PARAMETERS : TARGET COMPOUND VOLS + TICS
SAMPLE IDs : 09SB-FB-01			
1 QC-TB	AQUEOUS	1	FOR FOLLOWING PARAMETERS : TARGET COMPOUND VOLS + TICS
SAMPLE IDs : TB 020195			

IEA
An Aquarion Company

200 Monroe Turnpike
Monroe, Connecticut 06468

Phone 203·261·4458
Fax 203·268·5346

April 27, 1995

Mr. Nick Lanney
EA Engineering
2 Commercial Street
Sharon, MA 02067

Dear Mr. Lanney:

Please find enclosed the analytical results of seven samples received at our laboratory on April 4 and 6, 1995. This report contains sections addressing the following information at a minimum:

- sample summary
- analytical methodology
- state certifications
- definitions of data qualifiers and terminology
- analytical results
- chain-of-custody

IEA Report #3095-0302A	Purchase Order #L007326
Project ID: NCBC DAVISVILLE	

Copies of this analytical report and supporting data are maintained in our files for a minimum of five years unless special arrangements have been made. Unless specifically indicated, all analytical testing was performed at this laboratory location and no portion of the testing was subcontracted.

We appreciate your selection of our services and welcome any questions or suggestions you may have relative to this report. Please contact your customer service representative at (203) 261-4458 for any additional information. Thank you for utilizing our services; we hope you will consider us for your future analytical needs.

I have reviewed and approved the enclosed data for final release.

Very truly yours,

Jeffrey C. Curran
Laboratory Manager

JCC/adj

3095-0302A
EA ENGINEERING
PROJECT SUMMARY

The samples were analyzed for the parameters listed in the Analytical Summary Table.

METHODOLOGY/DISCUSSION

Volatile Organics - Volatile organics were determined by purge and trap GC/MS using USEPA CLP Protocols, OLM01.9. The instrumentation used was a Tekmar Dynamic Headspace Concentrator interfaced with a Hewlett-Packard Model 5995/5972A GC/MS/DS.

No problems were encountered.

RESULTS

The results are presented in the following Tables. Also enclosed are the data packages containing all relevant data.

Aqueous

TABLE VO-1.0
3095-0302A
EA ENGINEERING
EPA TCL VOLATILE ORGANICS

All values are ug/L.

Client Sample I.D.	Method Blank	SS09-17DQAFB		Quant. Limits with no Dilution
Lab Sample I.D.	VBLKDI	0302021		
Method Blank I.D.	VBLKDI	VBLKDI		
Dilution Factor	1.00	1.00		
Chloromethane	U	U		10
Bromomethane	U	U		10
Vinyl Chloride	U	U		10
Chloroethane	U	U		10
Methylene Chloride	U	U		10
Acetone	U	15		10
Carbon Disulfide	U	U		10
1,1-Dichloroethene	U	U		10
1,1-Dichloroethane	U	U		10
1,2-Dichloroethene (total)	U	U		10
Chloroform	U	U		10
1,2-Dichloroethane	U	U		10
2-Butanone	U	U		10
1,1,1-Trichloroethane	U	U		10
Carbon Tetrachloride	U	U		10
Bromodichloromethane	U	U		10
1,2-Dichloropropane	U	U		10
cis-1,3-Dichloropropene	U	U		10
Trichloroethene	U	U		10
Dibromochloromethane	U	U		10
1,1,2-Trichloroethane	U	U		10
Benzene	U	U		10
trans-1,3-Dichloropropene	U	U		10
Bromoform	U	U		10
4-Methyl-2-Pentanone	U	U		10
2-Hexanone	U	U		10
Tetrachloroethene	U	U		10
1,1,2,2-Tetrachloroethane	U	U		10
Toluene	U	U		10
Chlorobenzene	U	U		10
Ethylbenzene	U	U		10
Styrene	U	U		10
Xylene (total)	U	U		10
Date Received		03/31/95		
Date Extracted	N/A	N/A		
Date Analyzed	04/07/95	04/07/95		

See Appendix for qualifier definitions
Note: Compound detection limit = quantitation limit x dilution factor

Soil

TABLE VO-1.1
3095-0302A
EA ENGINEERING
EPA TCL VOLATILE ORGANICS

All values are ug/Kg dry weight basis.

Client Sample I.D.	Method Blank	SS09-23D-34.0-39.0	SS09-23D-49.0-54.0	Quant. Limits with no Dilution
Lab Sample I.D.	VBLKBN	0302022	0302023	
Method Blank I.D.	VBLKBN	VBLKBN	VBLKBN	
Dilution Factor	1.00	1.23	1.33	
Chloromethane	U	U	U	10
Bromomethane	U	U	U	10
Vinyl Chloride	U	U	U	10
Chloroethane	U	U	U	10
Methylene Chloride	U	U	U	10
Acetone	2J	73B	92B	10
Carbon Disulfide	U	U	U	10
1,1-Dichloroethene	U	U	U	10
1,1-Dichloroethane	U	U	U	10
1,2-Dichloroethene (total)	U	U	U	10
Chloroform	U	U	U	10
1,2-Dichloroethane	U	U	U	10
2-Butanone	1J	U	U	10
1,1,1-Trichloroethane	U	U	U	10
Carbon Tetrachloride	U	U	U	10
Bromodichloromethane	U	U	U	10
1,2-Dichloropropane	U	U	U	10
cis-1,3-Dichloropropene	U	U	U	10
Trichloroethene	U	U	U	10
Dibromochloromethane	U	U	U	10
1,1,2-Trichloroethane	U	U	U	10
Benzene	U	2J	1J	10
trans-1,3-Dichloropropene	U	U	U	10
Bromoform	U	U	U	10
4-Methyl-2-Pentanone	U	U	U	10
2-Hexanone	U	U	U	10
Tetrachloroethene	U	U	U	10
1,1,2,2-Tetrachloroethane	U	U	U	10
Toluene	U	12	5J	10
Chlorobenzene	U	U	U	10
Ethylbenzene	U	U	U	10
Styrene	U	U	U	10
Xylene (total)	U	4J	2J	10
Date Received		04/04/95	04/04/95	
Date Extracted	N/A	N/A	N/A	
Date Analyzed	04/12/95	04/12/95	04/12/95	

See Appendix for qualifier definitions
Note: Compound detection limit = quantitation limit x dilution factor

Soil

TABLE VO-1.2
3095-0302A
EA ENGINEERING
EPA TCL VOLATILE ORGANICS

All values are ug/Kg dry weight basis.

Client Sample I.D.	SS09-QADUP4	SS09-24D-19.0-24.0	SS09-24D-24.0-29.0	Quant. Limits with no Dilution
Lab Sample I.D.	0302024	0302025	0302026	
Method Blank I.D.	VBLKBN	VBLKBN	VBLKBN	
Dilution Factor	1.37	1.35	2.22	
Chloromethane	U	U	1J	10
Bromomethane	U	U	U	10
Vinyl Chloride	U	U	U	10
Chloroethane	U	U	U	10
Methylene Chloride	U	U	U	10
Acetone	35B	30B	190B	10
Carbon Disulfide	U	U	U	10
1,1-Dichloroethene	U	U	U	10
1,1-Dichloroethane	U	U	U	10
1,2-Dichloroethene (total)	U	U	U	10
Chloroform	U	U	U	10
1,2-Dichloroethane	U	U	U	10
2-Butanone	U	U	9JB	10
1,1,1-Trichloroethane	U	U	U	10
Carbon Tetrachloride	U	U	U	10
Bromodichloromethane	U	U	U	10
1,2-Dichloropropane	U	U	U	10
cis-1,3-Dichloropropene	U	U	U	10
Trichloroethene	U	U	U	10
Dibromochloromethane	U	U	U	10
1,1,2-Trichloroethane	U	U	U	10
Benzene	1J	0.6J	U	10
trans-1,3-Dichloropropene	U	U	U	10
Bromoform	U	U	U	10
4-Methyl-2-Pentanone	U	U	U	10
2-Hexanone	U	U	U	10
Tetrachloroethene	U	U	U	10
1,1,2,2-Tetrachloroethane	U	U	U	10
Toluene	5J	2J	1J	10
Chlorobenzene	U	U	U	10
Ethylbenzene	U	U	U	10
Styrene	U	U	U	10
Xylene (total)	U	2J	U	10
Date Received	04/04/95	04/06/95	04/06/95	
Date Extracted	N/A	N/A	N/A	
Date Analyzed	04/12/95	04/12/95	04/12/95	

See Appendix for qualifier definitions
Note: Compound detection limit = quantitation limit x dilution factor

Soil

TABLE VO-1.3
3095-0302A
EA ENGINEERING
EPA TCL VOLATILE ORGANICS

All values are ug/Kg dry weight basis.

Client Sample I.D.	Method Blank	SS09-QADUP5		Quant. Limits with no Dilution
Lab Sample I.D.	VBLKBO	0302027		
Method Blank I.D.	VBLKBO	VBLKBO		
Dilution Factor	1.00	2.35		
Chloromethane	U	U		10
Bromomethane	U	U		10
Vinyl Chloride	U	U		10
Chloroethane	U	U		10
Methylene Chloride	2J	12JB		10
Acetone	6J	270B		10
Carbon Disulfide	U	U		10
1,1-Dichloroethene	U	U		10
1,1-Dichloroethane	U	U		10
1,2-Dichloroethene (total)	U	U		10
Chloroform	U	U		10
1,2-Dichloroethane	0.5J	U		10
2-Butanone	U	U		10
1,1,1-Trichloroethane	U	U		10
Carbon Tetrachloride	U	U		10
Bromodichloromethane	U	U		10
1,2-Dichloropropane	U	U		10
cis-1,3-Dichloropropene	U	U		10
Trichloroethene	U	U		10
Dibromochloromethane	U	U		10
1,1,2-Trichloroethane	U	U		10
Benzene	U	U		10
trans-1,3-Dichloropropene	U	U		10
Bromoform	U	U		10
4-Methyl-2-Pentanone	U	U		10
2-Hexanone	U	U		10
Tetrachloroethene	U	U		10
1,1,2,2-Tetrachloroethane	U	U		10
Toluene	U	U		10
Chlorobenzene	U	U		10
Ethylbenzene	U	U		10
Styrene	U	U		10
Xylene (total)	U	U		10
Date Received		04/06/95		
Date Extracted	N/A	N/A		
Date Analyzed	04/13/95	04/13/95		

See Appendix for qualifier definitions
Note: Compound detection limit = quantitation limit x dilution factor

Aqueous

TABLE VOA-2.0
3095-0302A
EA ENGINEERING
VOLATILE TENTATIVELY IDENTIFIED COMPOUNDS

Related Method Blank: VBLKDI

Lab Sample Id: VBLKDI Client Sample Id: Method Blank

CAS#	Compound	RT	Estimated Conc., ug/L
	NONE DETECTED		

Lab Sample Id: 0302021 Client Sample Id: SS09-17DQAFB

CAS#	Compound	RT	Estimated Conc., ug/L
1634-04-4	PROPANE, 2-METHOXY-2-METHYL-	7.56	9JN

See Appendix for qualifier definitions

TABLE VOA-2.1
3095-0302A
EA ENGINEERING
VOLATILE TENTATIVELY IDENTIFIED COMPOUNDS

Related Method Blank: VBLKBN

Lab Sample Id: VBLKBN Client Sample Id: Method Blank

CAS#	Compound	RT	Estimated Conc., ug/Kg
	NONE DETECTED		

Lab Sample Id: 0302022 Client Sample Id: SS09-23D-34.0-39.0

CAS#	Compound	RT	Estimated Conc., ug/Kg
	UNKNOWN ALCOHOL	8.09	45J
	UNKNOWN SILOXANE	26.09	10J

Lab Sample Id: 0302023 Client Sample Id: SS09-23D-49.0-54.0

CAS#	Compound	RT	Estimated Conc., ug/Kg
	NONE DETECTED		

Lab Sample Id: 0302024 Client Sample Id: SS09-QADUP4

CAS#	Compound	RT	Estimated Conc., ug/Kg
	NONE DETECTED		

Lab Sample Id: 0302025 Client Sample Id: SS09-24D-19.0-24.0

CAS#	Compound	RT	Estimated Conc., ug/Kg
	UNKNOWN	24.97	31J
556672	CYCLOTETRASILOXANE, OCTAMETH	23.07	22JN
	UNKNOWN	8.07	18J
	UNKNOWN SILOXANE	25.91	18J
	UNKNOWN	6.91	15J

See Appendix for qualifier definitions

Soil

TABLE VOA-2.2
3095-0302A
EA ENGINEERING
VOLATILE TENTATIVELY IDENTIFIED COMPOUNDS

Related Method Blank: VBLKBN

Lab Sample Id: 0302026 Client Sample Id: SS09-24D-24.0-29.0

CAS#	Compound	RT	Estimated Conc., ug/Kg
	UNKNOWN	25.09	37J
	UNKNOWN SILOXANE	25.95	23J
556672	CYCLOTETRASILOXANE, OCTAMETH	23.11	21JN
	UNKNOWN ALCOHOL	6.75	21J

See Appendix for qualifier definitions

Soil

TABLE VOA-2.3
3095-0302A
EA ENGINEERING
VOLATILE TENTATIVELY IDENTIFIED COMPOUNDS

Related Method Blank: VBLKBO

Lab Sample Id: VBLKBO Client Sample Id: Method Blank

CAS#	Compound	RT	Estimated Conc., ug/Kg
	NONE DETECTED		

Lab Sample Id: 0302027 Client Sample Id: SS09-QADUP5

CAS#	Compound	RT	Estimated Conc., ug/Kg
	UNKNOWN ALCOHOL	6.85	27J

See Appendix for qualifier definitions

ORGANICS APPENDIX

U - Indicates that the compound was analyzed for but not detected.

J - Indicates that the compound was analyzed for and determined to be present in the sample. The mass spectrum of the compound meets the identification criteria of the method. The concentration listed is an estimated value, which is less than the specified minimum detection limit but is greater than zero.

B - This flag is used when the analyte is found in the blanks as well as the sample. It indicates possible sample contamination and warns the data user to use caution when applying the results of this analyte.

N - Indicates that the compound was analyzed for but not requested as an analyte. Value will not be listed on tabular result sheet.

S - Estimated due to surrogate outliers.

X - Matrix spike compound.

(1) - Cannot be separated.

(2) - Decomposes to azobenzene. Measured and calibrated as azobenzene.

A - This flag indicates that a TIC is a suspected aldol condensation product.

E - Indicates that it exceeds calibration curve range.

D - This flag identifies all compounds identified in an analysis at a secondary dilution factor.

C - Confirmed by GC/MS.

T - Compound present in TCLP blank.

P - This flag is used for a pesticide/aroclor target analyte when there is a greater than 25 percent difference for detected concentrations between the two GC columns (see Form X).

STATE CERTIFICATIONS

In some instances it may be necessary for environmental data to be reported to a regulatory authority with reference to a certified laboratory. For your convenience, the laboratory identification numbers for the IEA-Connecticut laboratory are provided in the following table. Many states certify laboratories for specific parameters or tests within a category (i.e. method 325.2 for wastewater). The information in the following table indicates the lab is certified in a general category of testing such as drinking water or wastewater analysis. The laboratory should be contacted directly if parameter-specific certification information is required.

IEA-Connecticut
Certification Summary (as of June 1993)

State	Responsible Agency	Certification	Lab Number
Connecticut	Department of Health Services	Drinking Water, Wastewater	PH-0497
Kansas	Department of Health and Environmental Services	Drinking Water, Wastewater/Solid, Hazardous Waste	E-210/E-1185
Massachusetts	Department of Environmental Protection	Potable/Non-Potable Water	CT023
New Hampshire	Department of Environmental Services	Drinking Water, Wastewater	252891
New Jersey	Department of Environmental Protection	Drinking Water, Wastewater	46410
New York	Department of Health	CLP, Drinking Water, Wastewater, Solid/ Hazardous Waste	10602
North Carolina	Division of Environmental Management	Wastewater	388
Rhode Island	Department of Health	Chemistry...Non-Potable Water and Wastewater	A43
California	Department of Health Services	Hazardous Waste	1778

30950-0302A
EA ENGINEERING
SAMPLE SUMMARY

CLIENT ID	LAB ID	MATRIX	DATE COLLECTED	DATE RECEIVED
SS09-17D0FB	0302021	LIQUID	03/30/95	03/31/95
SS09-23D-34.0-39.0	0302022	SOIL	03/31/95	04/04/95
SS09-23D-49.0-54.0	0302023	SOIL	03/31/95	04/04/95
SS09-DADUP4	0302024	SOIL	03/31/95	04/04/95
SS09-24D-19.0-24.0	0302025	SOIL	04/04/95	04/06/95
SS09-24D-24.0-29.0	0302026	SOIL	04/04/95	04/06/95
SS09-DADUP5	0302027	SOIL	04/04/95	04/06/95

IEA, INC.
ANALYTICAL SUMMARY

EA ENGINEERING
NCBC DAVISVILLE
3095-0302A

#SAMPLES	MATRIX	#REPS	DESCRIPTION
6	SOIL	1	TARGET COMPOUND VOLS + TICS

SAMPLE IDs : SS09-24D-19.0-24.0, SS09-24D-24.0-29.0,
: SS09-QADUP5, SS09-23D-34.0-39.0,
: SS09-23D-49.0-54.0, SS09-QADUP4

1 QC-FB	AQUEOUS		FOR FOLLOWING PARAMETERS :
		1	TARGET COMPOUND VOLS + TICS

SAMPLE IDs : SS09-17DQAFB

IEA
An Aquarion Company

200 Monroe Turnpike
Monroe, Connecticut 06468

Phone 203·261·4458
Fax 203·268·5346

Replaces report rec'd 4/28/95

April 27, 1995

RECEIVED
MAY 11 1995
EA Engineering, Science, and Technology
New England Operations

Mr. Nick Lanney
EA Engineering
2 Commercial Street
Sharon, MA 02067

Dear Mr. Lanney:

Please find enclosed the analytical results of 20 samples received at our laboratory on March 16 - 31, 1995. This report contains sections addressing the following information at a minimum:

- sample summary
- analytical methodology
- state certifications
- definitions of data qualifiers and terminology
- analytical results
- chain-of-custody

IEA Report #3095-0302	Purchase Order #L007326
Project ID: NCBC DAVISVILLE	

Copies of this analytical report and supporting data are maintained in our files for a minimum of five years unless special arrangements have been made. Unless specifically indicated, all analytical testing was performed at this laboratory location and no portion of the testing was subcontracted.

We appreciate your selection of our services and welcome any questions or suggestions you may have relative to this report. Please contact your customer service representative at (203) 261-4458 for any additional information. Thank you for utilizing our services; we hope you will consider us for your future analytical needs.

I have reviewed and approved the enclosed data for final release.

Very truly yours,

Jeffrey C. Curran
Laboratory Manager

JCC/adj

The samples were analyzed for the parameters listed in the Analytical Summary Table.

METHODOLOGY/DISCUSSION

Volatile Organics - Volatile organics were determined by purge and trap GC/MS using USEPA CLP Protocols, OLM01.9. The instrumentation used was a Tekmar Dynamic Headspace Concentrator interfaced with a Hewlett-Packard Model 5995/5972A GC/MS/DS.

Due to a high target compound concentration, sample SS09-20D-64.0-6.0 was analyzed at a 1:5 dilution.

Due to high concentrations of acetone in previous low level analyses, samples SS09-23D-29.0-31.0 and SS09-20D-44.0-46.0 were analyzed as medium level soils.

Due to high target compound concentrations, samples SS09-07R-38-43, SS09-23D-29-31, SS09-07R-15-17, SS09-07R-30-34, SS09-QADUP1, SS09-23D-31-33, SS09-21D-34-36, SS09-21D-39-41, and SS09-20D-44-46.

RESULTS

The results are presented in the following Tables. Also enclosed are the data packages containing all relevant data.

TABLE VO-1.0
3095-0302
EA ENGINEERING
EPA TCL VOLATILE ORGANICS

Soil

All values are ug/Kg dry weight basis.

Client Sample I.D.	Method Blank	SS09-17D-39.0-44.0		Quant. Limits with no Dilution
Lab Sample I.D.	VBLKDJ	0302018		
Method Blank I.D.	VBLKDJ	VBLKDJ		
Dilution Factor	1.00	1.23		
Chloromethane	U	U		10
Bromomethane	U	U		10
Vinyl Chloride	U	U		10
Chloroethane	U	U		10
Methylene Chloride	0.5J	U		10
Acetone	9J	83B		10
Carbon Disulfide	U	U		10
1,1-Dichloroethene	U	U		10
1,1-Dichloroethane	U	U		10
1,2-Dichloroethene (total)	U	U		10
Chloroform	U	U		10
1,2-Dichloroethane	U	U		10
2-Butanone	U	U		10
1,1,1-Trichloroethane	U	U		10
Carbon Tetrachloride	U	U		10
Bromodichloromethane	U	U		10
1,2-Dichloropropane	U	U		10
cis-1,3-Dichloropropene	U	U		10
Trichloroethene	U	U		10
Dibromochloromethane	U	U		10
1,1,2-Trichloroethane	U	U		10
Benzene	U	U		10
trans-1,3-Dichloropropene	U	U		10
Bromoform	U	U		10
4-Methyl-2-Pentanone	U	U		10
2-Hexanone	U	U		10
Tetrachloroethene	U	U		10
1,1,2,2-Tetrachloroethane	U	U		10
Toluene	U	1J		10
Chlorobenzene	U	U		10
Ethylbenzene	U	U		10
Styrene	U	U		10
Xylene (total)	U	U		10
Date Received		03/31/95		
Date Extracted	N/A	N/A		
Date Analyzed	04/08/95	04/08/95		

See Appendix for qualifier definitions
Note: Compound detection limit = quantitation limit x dilution factor

TABLE VO-1.1
3095-0302
EA ENGINEERING
EPA TCL VOLATILE ORGANICS

Soil

All values are ug/Kg dry weight basis.

Client Sample I.D. Lab Sample I.D. Method Blank I.D. Dilution Factor	Method Blank VBLKDK VBLKDK 1.00	SS09-17D-49.0-54.0 0302019 VBLKDK 1.47		Quant. Limits with no Dilution
Chloromethane	U	U		10
Bromomethane	U	U		10
Vinyl Chloride	U	U		10
Chloroethane	U	U		10
Methylene Chloride	U	U		10
Acetone	4J	50B		10
Carbon Disulfide	U	U		10
1,1-Dichloroethene	U	U		10
1,1-Dichloroethane	U	U		10
1,2-Dichloroethene (total)	U	U		10
Chloroform	U	U		10
1,2-Dichloroethane	U	U		10
2-Butanone	U	U		10
1,1,1-Trichloroethane	U	U		10
Carbon Tetrachloride	U	U		10
Bromodichloromethane	U	U		10
1,2-Dichloropropane	U	U		10
cis-1,3-Dichloropropene	U	U		10
Trichloroethene	U	U		10
Dibromochloromethane	U	U		10
1,1,2-Trichloroethane	U	U		10
Benzene	U	U		10
trans-1,3-Dichloropropene	U	U		10
Bromoform	U	U		10
4-Methyl-2-Pentanone	U	U		10
2-Hexanone	U	U		10
Tetrachloroethene	U	U		10
1,1,2,2-Tetrachloroethane	U	U		10
Toluene	U	3J		10
Chlorobenzene	U	U		10
Ethylbenzene	U	U		10
Styrene	U	U		10
Xylene (total)	U	U		10
Date Received Date Extracted Date Analyzed	 N/A 04/09/95	03/31/95 N/A 04/09/95		

See Appendix for qualifier definitions
Note: Compound detection limit = quantitation limit x dilution factor

TABLE VO-1.2 Soil
3095-0302
EA ENGINEERING
EPA TCL VOLATILE ORGANICS

All values are ug/Kg dry weight basis.

Client Sample I.D.	Method Blank	SS09-17D-49.0-54.0 MS	SS09-17D-49.0-54.0 MSD	Quant. Limits with no Dilution
Lab Sample I.D.	VBLKDL	0302019MS	0302019MSD	
Method Blank I.D.	VBLKDL	VBLKDL	VBLKDL	
Dilution Factor	1.00	1.47	1.47	
Chloromethane	U	U	U	10
Bromomethane	U	U	U	10
Vinyl Chloride	U	U	U	10
Chloroethane	U	U	U	10
Methylene Chloride	U	2J	U	10
Acetone	U	76	94	10
Carbon Disulfide	U	U	U	10
1,1-Dichloroethene	U	39X	41X	10
1,1-Dichloroethane	U	U	U	10
1,2-Dichloroethene (total)	U	U	U	10
Chloroform	U	U	U	10
1,2-Dichloroethane	U	U	U	10
2-Butanone	U	U	U	10
1,1,1-Trichloroethane	U	U	U	10
Carbon Tetrachloride	U	U	U	10
Bromodichloromethane	U	U	U	10
1,2-Dichloropropane	U	U	U	10
cis-1,3-Dichloropropene	U	U	U	10
Trichloroethene	U	64X	53X	10
Dibromochloromethane	U	U	U	10
1,1,2-Trichloroethane	U	U	U	10
Benzene	U	65X	58X	10
trans-1,3-Dichloropropene	U	U	U	10
Bromoform	U	U	U	10
4-Methyl-2-Pentanone	U	U	U	10
2-Hexanone	U	U	U	10
Tetrachloroethene	U	U	U	10
1,1,2,2-Tetrachloroethane	U	U	U	10
Toluene	U	72X	67X	10
Chlorobenzene	U	69X	60X	10
Ethylbenzene	U	1J	U	10
Styrene	U	U	U	10
Xylene (total)	U	U	U	10
Date Received		03/31/95	03/31/95	
Date Extracted	N/A	N/A	N/A	
Date Analyzed	04/10/95	04/10/95	04/10/95	

See Appendix for qualifier definitions
Note: Compound detection limit = quantitation limit x dilution factor

TABLE VO-1.3
3095-0302
EA ENGINEERING
EPA TCL VOLATILE ORGANICS

Soil

All values are ug/Kg dry weight basis.

Client Sample I.D.	SS09-QADUP3			Quant. Limits with no Dilution
Lab Sample I.D.	0302020			
Method Blank I.D.	VBLKDL			
Dilution Factor	1.25			
Chloromethane	U			10
Bromomethane	U			10
Vinyl Chloride	U			10
Chloroethane	U			10
Methylene Chloride	U			10
Acetone	160			10
Carbon Disulfide	U			10
1,1-Dichloroethene	U			10
1,1-Dichloroethane	U			10
1,2-Dichloroethene (total)	U			10
Chloroform	U			10
1,2-Dichloroethane	U			10
2-Butanone	U			10
1,1,1-Trichloroethane	U			10
Carbon Tetrachloride	U			10
Bromodichloromethane	U			10
1,2-Dichloropropane	U			10
cis-1,3-Dichloropropene	U			10
Trichloroethene	U			10
Dibromochloromethane	U			10
1,1,2-Trichloroethane	U			10
Benzene	U			10
trans-1,3-Dichloropropene	U			10
Bromoform	U			10
4-Methyl-2-Pentanone	U			10
2-Hexanone	U			10
Tetrachloroethene	U			10
1,1,2,2-Tetrachloroethane	U			10
Toluene	6J			10
Chlorobenzene	U			10
Ethylbenzene	U			10
Styrene	U			10
Xylene (total)	U			10
Date Received	03/31/95			
Date Extracted	N/A			
Date Analyzed	04/10/95			

See Appendix for qualifier definitions
Note: Compound detection limit = quantitation limit x dilution factor

TABLE VO-1.4 Soil
3095-0302
EA ENGINEERING
EPA TCL VOLATILE ORGANICS

All values are ug/Kg dry weight basis.

Client Sample I.D.	Method Blank	SS09-20D-64.0-66.0		Quant. Limits with no Dilution
Lab Sample I.D.	VBLKB3	0302004		
Method Blank I.D.	VBLKB3	VBLKB3		
Dilution Factor	1.00	5.43		
Chloromethane	U	U		10
Bromomethane	U	U		10
Vinyl Chloride	U	U		10
Chloroethane	U	U		10
Methylene Chloride	U	21J		10
Acetone	14	560B		10
Carbon Disulfide	U	U		10
1,1-Dichloroethene	U	U		10
1,1-Dichloroethane	U	U		10
1,2-Dichloroethene (total)	U	U		10
Chloroform	U	U		10
1,2-Dichloroethane	U	U		10
2-Butanone	U	U		10
1,1,1-Trichloroethane	U	U		10
Carbon Tetrachloride	U	U		10
Bromodichloromethane	U	U		10
1,2-Dichloropropane	U	U		10
cis-1,3-Dichloropropene	U	U		10
Trichloroethene	U	U		10
Dibromochloromethane	U	U		10
1,1,2-Trichloroethane	U	U		10
Benzene	U	U		10
trans-1,3-Dichloropropene	U	U		10
Bromoform	U	U		10
4-Methyl-2-Pentanone	U	U		10
2-Hexanone	U	U		10
Tetrachloroethene	U	U		10
1,1,2,2-Tetrachloroethane	U	U		10
Toluene	U	U		10
Chlorobenzene	U	U		10
Ethylbenzene	U	U		10
Styrene	U	U		10
Xylene (total)	U	U		10
Date Received		03/16/95		
Date Extracted	N/A	N/A		
Date Analyzed	03/22/95	03/22/95		

See Appendix for qualifier definitions
Note: Compound detection limit = quantitation limit x dilution factor

TABLE VO-1.5 Soil
3095-0302
EA ENGINEERING
EPA TCL VOLATILE ORGANICS

All values are ug/Kg dry weight basis.

Client Sample I.D.	Method Blank	SS09-23D-27.0-29.0		Quant. Limits with no Dilution
Lab Sample I.D.	VBLKBC	0302008		
Method Blank I.D.	VBLKBC	VBLKBC		
Dilution Factor	1.00	1.18		
Chloromethane	U	U		10
Bromomethane	U	U		10
Vinyl Chloride	U	U		10
Chloroethane	U	U		10
Methylene Chloride	0.9J	6JB		10
Acetone	10	79B		10
Carbon Disulfide	U	U		10
1,1-Dichloroethene	U	U		10
1,1-Dichloroethane	U	U		10
1,2-Dichloroethene (total)	U	U		10
Chloroform	U	U		10
1,2-Dichloroethane	U	U		10
2-Butanone	2J	U		10
1,1,1-Trichloroethane	U	U		10
Carbon Tetrachloride	U	U		10
Bromodichloromethane	U	U		10
1,2-Dichloropropane	U	U		10
cis-1,3-Dichloropropene	U	U		10
Trichloroethene	U	U		10
Dibromochloromethane	U	U		10
1,1,2-Trichloroethane	U	U		10
Benzene	U	U		10
trans-1,3-Dichloropropene	U	U		10
Bromoform	U	U		10
4-Methyl-2-Pentanone	U	U		10
2-Hexanone	U	U		10
Tetrachloroethene	U	U		10
1,1,2,2-Tetrachloroethane	U	U		10
Toluene	U	U		10
Chlorobenzene	U	U		10
Ethylbenzene	U	U		10
Styrene	U	U		10
Xylene (total)	U	U		10
Date Received		03/23/95		
Date Extracted	N/A	N/A		
Date Analyzed	03/28/95	03/28/95		

See Appendix for qualifier definitions
Note: Compound detection limit = quantitation limit x dilution factor

TABLE VO-1.6 Soil
3095-0302
EA ENGINEERING
EPA TCL VOLATILE ORGANICS

All values are ug/Kg dry weight basis.

Client Sample I.D.	Method Blank	SS09-07R-63.0-67.0	SS09-07R-63.0-67.0 MS	Quant. Limits with no Dilution
Lab Sample I.D.	VBLKBH	0302012	0302012MS	
Method Blank I.D.	VBLKBH	VBLKBH	VBLKBH	
Dilution Factor	1.00	1.15	1.15	
Chloromethane	U	U	U	10
Bromomethane	U	U	U	10
Vinyl Chloride	U	U	U	10
Chloroethane	U	U	U	10
Methylene Chloride	U	U	1J	10
Acetone	3J	76B	72B	10
Carbon Disulfide	U	U	U	10
1,1-Dichloroethene	U	U	49X	10
1,1-Dichloroethane	U	U	U	10
1,2-Dichloroethene (total)	U	U	U	10
Chloroform	U	U	3J	10
1,2-Dichloroethane	U	U	U	10
2-Butanone	U	6J	7J	10
1,1,1-Trichloroethane	U	U	U	10
Carbon Tetrachloride	U	U	U	10
Bromodichloromethane	U	U	U	10
1,2-Dichloropropane	U	U	U	10
cis-1,3-Dichloropropene	U	U	U	10
Trichloroethene	U	U	54X	10
Dibromochloromethane	U	U	U	10
1,1,2-Trichloroethane	U	U	U	10
Benzene	U	U	51X	10
trans-1,3-Dichloropropene	U	U	U	10
Bromoform	U	U	U	10
4-Methyl-2-Pentanone	U	U	U	10
2-Hexanone	U	U	U	10
Tetrachloroethene	U	U	U	10
1,1,2,2-Tetrachloroethane	U	U	U	10
Toluene	U	0.8J	65X	10
Chlorobenzene	U	U	52X	10
Ethylbenzene	U	U	U	10
Styrene	U	U	U	10
Xylene (total)	U	U	U	10
Date Received		03/27/95	03/27/95	
Date Extracted	N/A	N/A	N/A	
Date Analyzed	04/01/95	04/01/95	04/01/95	

See Appendix for qualifier definitions
Note: Compound detection limit = quantitation limit x dilution factor

TABLE VO-1.7
3095-0302
EA ENGINEERING
EPA TCL VOLATILE ORGANICS

All values are ug/Kg dry weight basis.

Client Sample I.D.	SS09-07R-63.0-67.0 MSD	SS09-QADUP2	SS09-07 R-58-61	Quant. Limits with no Dilution
Lab Sample I.D.	0302012MSD	0302015	0302017	
Method Blank I.D.	VBLKBH	VBLKBH	VBLKBH	
Dilution Factor	1.15	1.15	1.12	
Chloromethane	U	U	U	10
Bromomethane	U	U	U	10
Vinyl Chloride	U	U	U	10
Chloroethane	U	U	U	10
Methylene Chloride	1J	U	U	10
Acetone	51B	110B	130B	10
Carbon Disulfide	U	U	U	10
1,1-Dichloroethene	36X	U	U	10
1,1-Dichloroethane	U	U	U	10
1,2-Dichloroethene (total)	2J	U	2J	10
Chloroform	3J	U	U	10
1,2-Dichloroethane	U	U	U	10
2-Butanone	6J	16	17	10
1,1,1-Trichloroethane	U	U	U	10
Carbon Tetrachloride	U	U	U	10
Bromodichloromethane	U	U	U	10
1,2-Dichloropropane	U	U	U	10
cis-1,3-Dichloropropene	U	U	U	10
Trichloroethene	50X	U	U	10
Dibromochloromethane	U	U	U	10
1,1,2-Trichloroethane	U	U	U	10
Benzene	47X	U	U	10
trans-1,3-Dichloropropene	U	U	U	10
Bromoform	U	U	U	10
4-Methyl-2-Pentanone	U	U	U	10
2-Hexanone	U	U	U	10
Tetrachloroethene	U	U	U	10
1,1,2,2-Tetrachloroethane	U	U	U	10
Toluene	49X	2J	6J	10
Chlorobenzene	50X	U	U	10
Ethylbenzene	U	U	U	10
Styrene	U	U	U	10
Xylene (total)	U	U	U	10
Date Received	03/27/95	03/27/95	03/27/95	
Date Extracted	N/A	N/A	N/A	
Date Analyzed	04/01/95	04/01/95	04/01/95	

See Appendix for qualifier definitions
Note: Compound detection limit = quantitation limit x dilution factor

TABLE VO-1.8
3095-0302
EA ENGINEERING
EPA TCL VOLATILE ORGANICS

Soil
Medium

All values are ug/Kg dry weight basis.

Client Sample I.D.	Method Blank	SS09-07R-15.0-17.0	SS09-07R-30.0-34.0	Quant. Limits with no Dilution
Lab Sample I.D.	VBLKG6	0302005	0302006	
Method Blank I.D.	VBLKG6	VBLKG6	VBLKG6	
Dilution Factor	1.00	1.18	1.18	
Chloromethane	U	U	U	1200
Bromomethane	U	U	U	1200
Vinyl Chloride	U	U	U	1200
Chloroethane	U	U	U	1200
Methylene Chloride	300J	560JB	480JB	1200
Acetone	U	2600	1500	1200
Carbon Disulfide	100J	U	U	1200
1,1-Dichloroethene	U	U	U	1200
1,1-Dichloroethane	U	U	U	1200
1,2-Dichloroethene (total)	U	U	U	1200
Chloroform	490J	270JB	240JB	1200
1,2-Dichloroethane	U	U	U	1200
2-Butanone	U	1800	1100J	1200
1,1,1-Trichloroethane	U	U	U	1200
Carbon Tetrachloride	U	U	U	1200
Bromodichloromethane	U	U	U	1200
1,2-Dichloropropane	U	U	U	1200
cis-1,3-Dichloropropene	U	U	U	1200
Trichloroethene	U	170J	U	1200
Dibromochloromethane	U	U	U	1200
1,1,2-Trichloroethane	U	U	U	1200
Benzene	U	56J	U	1200
trans-1,3-Dichloropropene	U	U	U	1200
Bromoform	U	U	U	1200
4-Methyl-2-Pentanone	U	U	U	1200
2-Hexanone	U	U	U	1200
Tetrachloroethene	U	U	U	1200
1,1,2,2-Tetrachloroethane	U	U	U	1200
Toluene	U	U	100J	1200
Chlorobenzene	U	U	U	1200
Ethylbenzene	U	U	U	1200
Styrene	87J	U	U	1200
Xylene (total)	110J	590JB	110JB	1200
Date Received		03/18/95	03/18/95	
Date Extracted	N/A	N/A	N/A	
Date Analyzed	03/28/95	03/28/95	03/28/95	

See Appendix for qualifier definitions
Note: Compound detection limit = quantitation limit x dilution factor

TABLE VO-1.9
3095-0302
EA ENGINEERING
EPA TCL VOLATILE ORGANICS

Soil
Medium

All values are ug/Kg dry weight basis.

Client Sample I.D.	SS09-07R-30.0-34.0 MS	SS09-07R-30.0-34.0 MSD	SS09-QADUP1	Quant. Limits with no Dilution
Lab Sample I.D.	0302006MS	0302006MSD	0302007	
Method Blank I.D.	VBLKG6	VBLKG6	VBLKG6	
Dilution Factor	1.18	1.18	1.25	
Chloromethane	U	U	U	1200
Bromomethane	U	U	U	1200
Vinyl Chloride	U	U	U	1200
Chloroethane	U	U	U	1200
Methylene Chloride	480JB	270JB	460JB	1200
Acetone	1600	1300J	U	1200
Carbon Disulfide	U	U	U	1200
1,1-Dichloroethene	UX	UX	U	1200
1,1-Dichloroethane	U	U	U	1200
1,2-Dichloroethene (total)	U	U	U	1200
Chloroform	460JB	U	670JB	1200
1,2-Dichloroethane	U	U	U	1200
2-Butanone	U	790J	730J	1200
1,1,1-Trichloroethane	U	U	U	1200
Carbon Tetrachloride	U	U	U	1200
Bromodichloromethane	U	U	U	1200
1,2-Dichloropropane	U	U	U	1200
cis-1,3-Dichloropropene	U	U	U	1200
Trichloroethene	7300X	6300X	U	1200
Dibromochloromethane	U	U	U	1200
1,1,2-Trichloroethane	U	U	U	1200
Benzene	7000X	6200X	U	1200
trans-1,3-Dichloropropene	U	U	U	1200
Bromoform	U	U	U	1200
4-Methyl-2-Pentanone	U	U	U	1200
2-Hexanone	U	U	U	1200
Tetrachloroethene	U	U	U	1200
1,1,2,2-Tetrachloroethane	U	U	U	1200
Toluene	7300X	6200X	U	1200
Chlorobenzene	7600X	6500X	U	1200
Ethylbenzene	U	U	U	1200
Styrene	73JB	U	U	1200
Xylene (total)	360JB	76JB	U	1200
Date Received	03/18/95	03/18/95	03/18/95	
Date Extracted	N/A	N/A	N/A	
Date Analyzed	03/28/95	03/28/95	03/28/95	

See Appendix for qualifier definitions
Note: Compound detection limit = quantitation limit x dilution factor

TABLE VO-1.10
3095-0302
EA ENGINEERING
EPA TCL VOLATILE ORGANICS

Soil
Medium

All values are ug/Kg dry weight basis.

Client Sample I.D.	Method Blank	SS09-23D-31.0-33.0		Quant. Limits with no Dilution
Lab Sample I.D.	VBLKG7	0302010		
Method Blank I.D.	VBLKG7	VBLKG7		
Dilution Factor	1.00	1.25		
Chloromethane	U	U		1200
Bromomethane	U	U		1200
Vinyl Chloride	U	U		1200
Chloroethane	U	U		1200
Methylene Chloride	U	U		1200
Acetone	1700	3700B		1200
Carbon Disulfide	U	U		1200
1,1-Dichloroethene	U	U		1200
1,1-Dichloroethane	U	U		1200
1,2-Dichloroethene (total)	U	U		1200
Chloroform	U	130J		1200
1,2-Dichloroethane	U	U		1200
2-Butanone	U	1500		1200
1,1,1-Trichloroethane	U	U		1200
Carbon Tetrachloride	U	U		1200
Bromodichloromethane	U	U		1200
1,2-Dichloropropane	U	U		1200
cis-1,3-Dichloropropene	U	U		1200
Trichloroethene	U	U		1200
Dibromochloromethane	U	U		1200
1,1,2-Trichloroethane	U	U		1200
Benzene	U	U		1200
trans-1,3-Dichloropropene	U	U		1200
Bromoform	U	U		1200
4-Methyl-2-Pentanone	U	U		1200
2-Hexanone	U	U		1200
Tetrachloroethene	U	U		1200
1,1,2,2-Tetrachloroethane	U	U		1200
Toluene	U	U		1200
Chlorobenzene	U	U		1200
Ethylbenzene	U	U		1200
Styrene	U	U		1200
Xylene (total)	U	100J		1200
Date Received		03/23/95		
Date Extracted	N/A	N/A		
Date Analyzed	03/29/95	03/29/95		

See Appendix for qualifier definitions
Note: Compound detection limit = quantitation limit x dilution factor

TABLE VO-1.11
3095-0302
EA ENGINEERING
EPA TCL VOLATILE ORGANICS

Soil
Medium

All values are ug/Kg dry weight basis.

Client Sample I.D.	Method Blank	SS09-21D-34.0-36.0	SS09-21D-39.0-41.0	Quant. Limits with no Dilution
Lab Sample I.D.	VBLKB6	0302001	0302002	
Method Blank I.D.	VBLKB6	VBLKB6	VBLKB6	
Dilution Factor	1.00	1.22	1.39	
Chloromethane	U	U	U	1200
Bromomethane	U	U	U	1200
Vinyl Chloride	U	U	U	1200
Chloroethane	U	U	U	1200
Methylene Chloride	270J	700JB	590JB	1200
Acetone	U	5000	4500	1200
Carbon Disulfide	U	U	U	1200
1,1-Dichloroethene	U	U	U	1200
1,1-Dichloroethane	U	U	U	1200
1,2-Dichloroethene (total)	U	U	U	1200
Chloroform	U	U	U	1200
1,2-Dichloroethane	U	U	U	1200
2-Butanone	U	U	U	1200
1,1,1-Trichloroethane	U	U	U	1200
Carbon Tetrachloride	U	U	U	1200
Bromodichloromethane	U	U	U	1200
1,2-Dichloropropane	U	U	U	1200
cis-1,3-Dichloropropene	U	U	U	1200
Trichloroethene	U	200J	320J	1200
Dibromochloromethane	U	U	U	1200
1,1,2-Trichloroethane	U	U	U	1200
Benzene	U	U	U	1200
trans-1,3-Dichloropropene	U	U	U	1200
Bromoform	U	U	U	1200
4-Methyl-2-Pentanone	U	U	U	1200
2-Hexanone	U	U	U	1200
Tetrachloroethene	U	U	U	1200
1,1,2,2-Tetrachloroethane	U	U	U	1200
Toluene	U	U	U	1200
Chlorobenzene	U	U	U	1200
Ethylbenzene	U	U	U	1200
Styrene	U	U	U	1200
Xylene (total)	U	U	U	1200
Date Received		03/16/95	03/16/95	
Date Extracted	N/A	N/A	N/A	
Date Analyzed	03/24/95	03/24/95	03/24/95	

See Appendix for qualifier definitions
Note: Compound detection limit = quantitation limit x dilution factor

TABLE VO-1.12
3095-0302
EA ENGINEERING
EPA TCL VOLATILE ORGANICS

Soil
Medium

All values are ug/Kg dry weight basis.

Client Sample I.D.	Method Blank	SS09-20D-44.0-46.0		Quant. Limits with no Dilution
Lab Sample I.D.	VBLKB7	0302003		
Method Blank I.D.	VBLKB7	VBLKB7		
Dilution Factor	1.00	1.47		
Chloromethane	U	U		1200
Bromomethane	U	U		1200
Vinyl Chloride	U	U		1200
Chloroethane	U	U		1200
Methylene Chloride	120J	240JB		1200
Acetone	5300	5100B		1200
Carbon Disulfide	U	U		1200
1,1-Dichloroethene	U	U		1200
1,1-Dichloroethane	U	U		1200
1,2-Dichloroethene (total)	U	U		1200
Chloroform	U	U		1200
1,2-Dichloroethane	U	U		1200
2-Butanone	U	1300J		1200
1,1,1-Trichloroethane	U	U		1200
Carbon Tetrachloride	U	U		1200
Bromodichloromethane	U	U		1200
1,2-Dichloropropane	U	U		1200
cis-1,3-Dichloropropene	U	U		1200
Trichloroethene	U	U		1200
Dibromochloromethane	U	U		1200
1,1,2-Trichloroethane	U	U		1200
Benzene	U	U		1200
trans-1,3-Dichloropropene	U	U		1200
Bromoform	U	U		1200
4-Methyl-2-Pentanone	U	U		1200
2-Hexanone	U	U		1200
Tetrachloroethene	U	U		1200
1,1,2,2-Tetrachloroethane	U	U		1200
Toluene	U	U		1200
Chlorobenzene	U	U		1200
Ethylbenzene	U	U		1200
Styrene	U	U		1200
Xylene (total)	U	U		1200
Date Received		03/16/95		
Date Extracted	N/A	N/A		
Date Analyzed	03/25/95	03/25/95		

See Appendix for qualifier definitions
Note: Compound detection limit = quantitation limit x dilution factor

TABLE VOA-2.11
3095-0302
EA ENGINEERING
VOLATILE TENTATIVELY IDENTIFIED COMPOUNDS

Soil
Medium

Related Method Blank: VBLKBJ

Lab Sample Id: VBLKBJ Client Sample Id: Method Blank

CAS#	Compound	RT	Estimated Conc., ug/Kg
	NONE DETECTED		

Lab Sample Id: 0302013 Client Sample Id: SS09-07R-38-43

CAS#	Compound	RT	Estimated Conc., ug/Kg
	NONE DETECTED		

See Appendix for qualifier definitions

TABLE VO-1.13
3095-0302
EA ENGINEERING
EPA TCL VOLATILE ORGANICS

Soil
Medium

All values are ug/Kg dry weight basis.

Client Sample I.D.	Method Blank	SS09-23D-29.0-31.0		Quant. Limits with no Dilution
Lab Sample I.D.	VBLKG9	0302009		
Method Blank I.D.	VBLKG9	VBLKG9		
Dilution Factor	1.00	1.22		
Chloromethane	U	U		1200
Bromomethane	U	U		1200
Vinyl Chloride	U	U		1200
Chloroethane	U	U		1200
Methylene Chloride	U	360J		1200
Acetone	3300	5400B		1200
Carbon Disulfide	U	U		1200
1,1-Dichloroethene	U	U		1200
1,1-Dichloroethane	U	U		1200
1,2-Dichloroethene (total)	U	U		1200
Chloroform	U	U		1200
1,2-Dichloroethane	U	U		1200
2-Butanone	550J	1100JB		1200
1,1,1-Trichloroethane	U	U		1200
Carbon Tetrachloride	U	U		1200
Bromodichloromethane	U	U		1200
1,2-Dichloropropane	U	U		1200
cis-1,3-Dichloropropene	U	U		1200
Trichloroethene	U	U		1200
Dibromochloromethane	U	U		1200
1,1,2-Trichloroethane	U	U		1200
Benzene	U	U		1200
trans-1,3-Dichloropropene	U	U		1200
Bromoform	U	U		1200
4-Methyl-2-Pentanone	U	U		1200
2-Hexanone	U	U		1200
Tetrachloroethene	U	U		1200
1,1,2,2-Tetrachloroethane	U	U		1200
Toluene	U	U		1200
Chlorobenzene	U	U		1200
Ethylbenzene	U	U		1200
Styrene	U	U		1200
Xylene (total)	U	76J		1200
Date Received		03/23/95		
Date Extracted	N/A	N/A		
Date Analyzed	03/31/95	03/31/95		

See Appendix for qualifier definitions
Note: Compound detection limit = quantitation limit x dilution factor

TABLE VO-1.14
3095-0302
EA ENGINEERING
EPA TCL VOLATILE ORGANICS

Soil
Medium

All values are ug/Kg dry weight basis.

Client Sample I.D.	Method Blank	SS09-07 R-38-43		Quant. Limits with no Dilution
Lab Sample I.D.	VBLKBJ	0302013		
Method Blank I.D.	VBLKBJ	VBLKBJ		
Dilution Factor	1.00	1.41		
Chloromethane	U	U		1200
Bromomethane	U	U		1200
Vinyl Chloride	U	U		1200
Chloroethane	U	U		1200
Methylene Chloride	U	U		1200
Acetone	U	2900		1200
Carbon Disulfide	U	U		1200
1,1-Dichloroethene	U	U		1200
1,1-Dichloroethane	U	U		1200
1,2-Dichloroethene (total)	U	6600		1200
Chloroform	U	U		1200
1,2-Dichloroethane	U	U		1200
2-Butanone	U	U		1200
1,1,1-Trichloroethane	U	U		1200
Carbon Tetrachloride	U	U		1200
Bromodichloromethane	U	U		1200
1,2-Dichloropropane	U	U		1200
cis-1,3-Dichloropropene	U	U		1200
Trichloroethene	U	2200		1200
Dibromochloromethane	U	U		1200
1,1,2-Trichloroethane	U	U		1200
Benzene	U	U		1200
trans-1,3-Dichloropropene	U	U		1200
Bromoform	U	U		1200
4-Methyl-2-Pentanone	U	U		1200
2-Hexanone	U	U		1200
Tetrachloroethene	U	U		1200
1,1,2,2-Tetrachloroethane	U	U		1200
Toluene	U	U		1200
Chlorobenzene	U	U		1200
Ethylbenzene	U	U		1200
Styrene	U	U		1200
Xylene (total)	U	U		1200
Date Received		03/27/95		
Date Extracted	N/A	N/A		
Date Analyzed	04/03/95	04/03/95		

See Appendix for qualifier definitions
Note: Compound detection limit = quantitation limit x dilution factor

TABLE VOA-2.0 Soil
3095-0302
EA ENGINEERING
VOLATILE TENTATIVELY IDENTIFIED COMPOUNDS

Related Method Blank: VBLKDJ

Lab Sample Id: VBLKDJ Client Sample Id: Method Blank

CAS#	Compound	RT	Estimated Conc., ug/Kg
	NONE DETECTED		

Lab Sample Id: 0302018 Client Sample Id: SS09-17D-39.0-44.0

CAS#	Compound	RT	Estimated Conc., ug/Kg
	NONE DETECTED		

See Appendix for qualifier definitions

TABLE VOA-2.1
3095-0302
EA ENGINEERING
VOLATILE TENTATIVELY IDENTIFIED COMPOUNDS

Related Method Blank: VBLKDK

Lab Sample Id: VBLKDK Client Sample Id: Method Blank

CAS#	Compound	RT	Estimated Conc., ug/Kg
	NONE DETECTED		

Lab Sample Id: 0302019 Client Sample Id: SS09-17D-49.0-54.0

CAS#	Compound	RT	Estimated Conc., ug/Kg
	UNKNOWN ALCOHOL	6.65	8J
	UNKNOWN SILOXANE	7.64	8J

See Appendix for qualifier definitions

TABLE VOA-2.2
3095-0302
EA ENGINEERING
VOLATILE TENTATIVELY IDENTIFIED COMPOUNDS

Related Method Blank: VBLKDL

Lab Sample Id: VBLKDL Client Sample Id: Method Blank

CAS#	Compound	RT	Estimated Conc., ug/Kg
	NONE DETECTED		

Lab Sample Id: 0302020 Client Sample Id: SS09-QADUP3

CAS#	Compound	RT	Estimated Conc., ug/Kg
	UNKNOWN ALCOHOL	6.60	7J

See Appendix for qualifier definitions

TABLE VOA-2.3
3095-0302
EA ENGINEERING
VOLATILE TENTATIVELY IDENTIFIED COMPOUNDS

Soil

Related Method Blank: VBLKB3

Lab Sample Id: VBLKB3 Client Sample Id: Method Blank

CAS#	Compound	RT	Estimated Conc., ug/Kg
	NONE DETECTED		

Lab Sample Id: 0302004 Client Sample Id: SS09-20D-64.0-66.0

CAS#	Compound	RT	Estimated Conc., ug/Kg
67630S	2-PROPANOL	6.79	260JN

See Appendix for qualifier definitions

TABLE VOA-2.4
3095-0302
EA ENGINEERING
VOLATILE TENTATIVELY IDENTIFIED COMPOUNDS

Related Method Blank: VBLKBC

Lab Sample Id: VBLKBC Client Sample Id: Method Blank

CAS#	Compound	RT	Estimated Conc., ug/Kg
	NONE DETECTED		

Lab Sample Id: 0302008 Client Sample Id: SS09-23D-27.0-29.0

CAS#	Compound	RT	Estimated Conc., ug/Kg
4889832	BICYCLO[3.1.1]HEPT-2-ENE, 3,	22.50	16JN
	UNKNOWN ALCOHOL	6.84	7J

See Appendix for qualifier definitions

TABLE VOA-2.5
3095-0302
EA ENGINEERING
VOLATILE TENTATIVELY IDENTIFIED COMPOUNDS

Related Method Blank: VBLKBH

Lab Sample Id: VBLKBH Client Sample Id: Method Blank

CAS#	Compound	RT	Estimated Conc., ug/Kg
	NONE DETECTED		

Lab Sample Id: 0302012 Client Sample Id: SS09-07R-63.0-67.0

CAS#	Compound	RT	Estimated Conc., ug/Kg
	NONE DETECTED		

Lab Sample Id: 0302015 Client Sample Id: SS09-QADUP2

CAS#	Compound	RT	Estimated Conc., ug/Kg
	NONE DETECTED		

Lab Sample Id: 0302017 Client Sample Id: SS09-07R-58-61

CAS#	Compound	RT	Estimated Conc., ug/Kg
	NONE DETECTED		

See Appendix for qualifier definitions

TABLE VOA-2.6
3095-0302
EA ENGINEERING
VOLATILE TENTATIVELY IDENTIFIED COMPOUNDS

Soil
Medium

Related Method Blank: VBLKG6

Lab Sample Id: VBLKG6 Client Sample Id: Method Blank

CAS#	Compound	RT	Estimated Conc., ug/Kg
	NONE DETECTED		

Lab Sample Id: 0302005 Client Sample Id: SS09-07R-15.0-17.0

CAS#	Compound	RT	Estimated Conc., ug/Kg
	UNKNOWN BRANCHED ALKANE	23.08	25000J
	UNKNOWN BRANCHED CYCLOALKANE	23.85	24000J
	UNKNOWN BRANCHED ALKANE	24.35	23000J
	UNKNOWN BRANCHED CYCLOALKANE	22.66	22000J
	UNKNOWN BRANCHED CYCLOALKANE	24.88	21000J
	UNKNOWN BRANCHED ALKANE	22.97	19000J
	UNKNOWN BRANCHED ALKANE	22.41	18000J
	UNKNOWN BRANCHED ALKANE	20.42	17000J
	UNKNOWN BRANCHED ALKANE	24.99	16000J
	UNKNOWN BRANCHED ALKANE	20.70	15000J

Lab Sample Id: 0302006 Client Sample Id: SS09-07R-30.0-34.0

CAS#	Compound	RT	Estimated Conc., ug/Kg
	NONE DETECTED		

Lab Sample Id: 0302007 Client Sample Id: SS09-QADUP1

CAS#	Compound	RT	Estimated Conc., ug/Kg
	UNKNOWN BRANCHED ALKANE	23.14	25000J
	UNKNOWN BRANCHED CYCLOALKANE	22.72	23000J
4291796	CYCLOHEXANE, 1-METHYL-2-PROP	23.91	22000JN
	UNKNOWN BRANCHED ALKANE	24.41	22000J
	UNKNOWN BRANCHED CYCLOALKANE	24.94	20000J
	UNKNOWN BRANCHED ALKANE	20.45	19000J
	UNKNOWN BRANCHED ALKANE	23.03	19000J
	UNKNOWN BRANCHED ALKANE	22.47	18000J
	UNKNOWN BRANCHED CYCLOALKANE	21.53	17000J
	UNKNOWN BRANCHED ALKANE	20.73	16000J

See Appendix for qualifier definitions

TABLE VOA-2.7
3095-0302
EA ENGINEERING
VOLATILE TENTATIVELY IDENTIFIED COMPOUNDS

Soil
Medium

Related Method Blank: VBLKG7

Lab Sample Id: VBLKG7 Client Sample Id: Method Blank

CAS#	Compound	RT	Estimated Conc., ug/Kg
	NONE DETECTED		

Lab Sample Id: 0302010 Client Sample Id: SS09-23D-31.0-33.0

CAS#	Compound	RT	Estimated Conc., ug/Kg
	UNKNOWN ALCOHOL	8.30	3000J

See Appendix for qualifier definitions

TABLE VOA-2.8
3095-0302
EA ENGINEERING
VOLATILE TENTATIVELY IDENTIFIED COMPOUNDS

Soil
Medium

Related Method Blank: VBLKB6

Lab Sample Id: VBLKB6 Client Sample Id: Method Blank

CAS#	Compound	RT	Estimated Conc., ug/Kg
76131	ETHANE, 1,1,2-TRICHLORO-1,2,	6.44	2400JN

Lab Sample Id: 0302001 Client Sample Id: SS09-21D-34.0-36.0

CAS#	Compound	RT	Estimated Conc., ug/Kg
	NONE DETECTED		

Lab Sample Id: 0302002 Client Sample Id: SS09-21D-39.0-41.0

CAS#	Compound	RT	Estimated Conc., ug/Kg
67630	2-PROPANOL	6.96	1300JN
	UNKNOWN	4.31	1100J

See Appendix for qualifier definitions

TABLE VOA-2.9
3095-0302
EA ENGINEERING
VOLATILE TENTATIVELY IDENTIFIED COMPOUNDS

Soil
Medium

Related Method Blank: VBLKB7

Lab Sample Id: VBLKB7 Client Sample Id: Method Blank

CAS#	Compound	RT	Estimated Conc., ug/Kg
	NONE DETECTED		

Lab Sample Id: 0302003 Client Sample Id: SS09-20D-44.0-46.0

CAS#	Compound	RT	Estimated Conc., ug/Kg
	NONE DETECTED		

See Appendix for qualifier definitions

TABLE VOA-2.10
3095-0302
EA ENGINEERING
VOLATILE TENTATIVELY IDENTIFIED COMPOUNDS

Soil
Medium

Related Method Blank: VBLKG9

Lab Sample Id: VBLKG9 Client Sample Id: Method Blank

CAS#	Compound	RT	Estimated Conc., ug/Kg
	NONE DETECTED		

Lab Sample Id: 0302009 Client Sample Id: SS09-23D-29.0-31.0

CAS#	Compound	RT	Estimated Conc., ug/Kg
	NONE DETECTED		

See Appendix for qualifier definitions

ORGANICS APPENDIX

U - Indicates that the compound was analyzed for but not detected.

J - Indicates that the compound was analyzed for and determined to be present in the sample. The mass spectrum of the compound meets the identification criteria of the method. The concentration listed is an estimated value, which is less than the specified minimum detection limit but is greater than zero.

B - This flag is used when the analyte is found in the blanks as well as the sample. It indicates possible sample contamination and warns the data user to use caution when applying the results of this analyte.

N - Indicates that the compound was analyzed for but not requested as an analyte. Value will not be listed on tabular result sheet.

S - Estimated due to surrogate outliers.

X - Matrix spike compound.

(1) - Cannot be separated.

(2) - Decomposes to azobenzene. Measured and calibrated as azobenzene.

A - This flag indicates that a TIC is a suspected aldol condensation product.

E - Indicates that it exceeds calibration curve range.

D - This flag identifies all compounds identified in an analysis at a secondary dilution factor.

C - Confirmed by GC/MS.

T - Compound present in TCLP blank.

P - This flag is used for a pesticide/aroclor target analyte when there is a greater than 25 percent difference for detected concentrations between the two GC columns (see Form X).

STATE CERTIFICATIONS

In some instances it may be necessary for environmental data to be reported to a regulatory authority with reference to a certified laboratory. For your convenience, the laboratory identification numbers for the IEA-Connecticut laboratory are provided in the following table. Many states certify laboratories for specific parameters or tests within a category (i.e. method 325.2 for wastewater). The information in the following table indicates the lab is certified in a general category of testing such as drinking water or wastewater analysis. The laboratory should be contacted directly if parameter-specific certification information is required.

IEA-Connecticut
Certification Summary (as of June 1993)

State	Responsible Agency	Certification	Lab Number
Connecticut	Department of Health Services	Drinking Water, Wastewater	PH-0497
Kansas	Department of Health and Environmental Services	Drinking Water, Wastewater/Solid, Hazardous Waste	E-210/E-1185
Massachusetts	Department of Environmental Protection	Potable/Non-Potable Water	CT023
New Hampshire	Department of Environmental Services	Drinking Water, Wastewater	252891
New Jersey	Department of Environmental Protection	Drinking Water, Wastewater	46410
New York	Department of Health	CLP, Drinking Water, Wastewater, Solid/ Hazardous Waste	10602
North Carolina	Division of Environmental Management	Wastewater	388
Rhode Island	Department of Health	Chemistry...Non-Potable Water and Wastewater	A43
California	Department of Health Services	Hazardous Waste	1778

30950-0302
EA ENGINEERING
SAMPLE SUMMARY

CLIENT ID	LAB ID	MATRIX	DATE COLLECTED	DATE RECEIVED
SS09-21D-34.0-36.0	0302001	SOIL	03/10/95	03/16/95
SS09-21D-39.0-41.0	0302002	SOIL	03/10/95	03/16/95
SS09-20D-44.0-46.0	0302003	SOIL	03/13/95	03/16/95
SS09-20D-64.0-66.0	0302004	SOIL	03/13/95	03/16/95
SS09-07R-15.0-17.0	0302005	SOIL	03/16/95	03/18/95
SS09-07R-30.0-34.0	0302006	SOIL	03/16/95	03/18/95
SS09-QADUP1	0302007	SOIL	03/16/95	03/18/95
SS09-23D-27.0-29.0	0302008	SOIL	03/17/95	03/23/95
SS09-23D-29.0-31.0	0302009	SOIL	03/17/95	03/23/95
SS09-23D-31.0-33.0	0302010	SOIL	03/17/95	03/23/95
SS09-07R-63.0-67.0	0302012	SOIL	03/24/95	03/27/95
SS09-07R-38-43	0302013	SOIL	03/23/95	03/27/95
SS09-QADUP2	0302015	SOIL	03/24/95	03/27/95
SS09-07R-58-61	0302017	SOIL	03/24/95	03/27/95
SS09-17D-39.0-44.0	0302018	SOIL	03/29/95	03/31/95
SS09-17D-49.0-54.0	0302019	SOIL	03/29/95	03/31/95
SS09-QADUP3	0302020	SOIL	03/29/95	03/31/95

IEA, INC.
ANALYTICAL SUMMARY

EA ENGINEERING
NCBC DAVISVILLE
3095-0302

#SAMPLES	MATRIX	#REPS	DESCRIPTION
17	SOIL	1	TARGET COMPOUND VOLS + TICS

SAMPLE IDs : SS09-21D-39.0-41.0, SS09-20D-44.0-46.0,
: SS09-20D-64.0-66.0, SS09-07R-15.0-17.0,
: SS09-07R-30.0-34.0, SS09-21D-34.0-36.0,
: SS09-23D-31.0-33.0, SS09-23D-27.0-29.0,
: SS09-QADUP1, SS09-07R-63.0-67.0,
: SS09-23D-29.0-31.0, SS09-07R-38-43,
: SS09-QADUP2, SS09-07R-58-61,
: SS09-17D-39.0-44.0, SS09-17D-49.0-54.0,
: SS09-QADUP3

3 QC-MS	SOIL		FOR FOLLOWING PARAMETERS :
		1	TARGET COMPOUND VOLATILES

SAMPLE IDs : SS09-07R-30.0-34.0, SS09-07R-63.0-67.0,
: SS09-17D-49.0-54.0

3 QC-MSD	SOIL		FOR FOLLOWING PARAMETERS :
		1	TARGET COMPOUND VOLATILES

SAMPLE IDs : SS09-07R-30.0-34.0, SS09-07R-63.0-67.0,
: SS09-17D-49.0-54.0

IEA
An Aquarion Company

200 Monroe Turnpike
Monroe, Connecticut 06468

Phone 203·261·4458
Fax 203·268·5346

March 27, 1995

MAR 28 1995

Mr. Nick Lanney
EA Engineering
2 Commercial Street
Sharon, MA 02067

Dear Mr. Lanney:

Please find enclosed the analytical results of 20 samples received at our laboratory on March 1-8, 1995. This report contains sections addressing the following information at a minimum:

- sample summary
- analytical methodology
- state certifications
- definitions of data qualifiers and terminology
- analytical results
- chain-of-custody

IEA Report #3095-0222	Purchase Order #L007326
Project ID: NCBC Davisville	

Copies of this analytical report and supporting data are maintained in our files for a minimum of five years unless special arrangements have been made. Unless specifically indicated, all analytical testing was performed at this laboratory location and no portion of the testing was subcontracted.

We appreciate your selection of our services and welcome any questions or suggestions you may have relative to this report. Please contact your customer service representative at (203) 261-4458 for any additional information. Thank you for utilizing our services; we hope you will consider us for your future analytical needs.

I have reviewed and approved the enclosed data for final release.

Very truly yours,

Jeffrey C. Curran
Laboratory Manager

JCC/mt

3095-0222
EA ENGINEERING
PROJECT SUMMARY

The samples were analyzed for the parameters listed in the Analytical Summary Table.

METHODOLOGY/DISCUSSION

Volatile Organics - Volatile organics were determined by purge and trap GC/MS using USEPA CLP Protocols, OLM01.9. The instrumentation used was a Tekmar Dynamic Headspace Concentrator interfaced with a Hewlett-Packard Model 5995/5972A GC/MS/DS.

Sample SS09-22S-5.0-7.0 was analyzed as a low level soil at a 1:5 dilution. The following samples were analyzed as medium level soils and/or at dilutions due to high target compound concentrations:

Sample ID	Dilution
SS09-16S-10.0-12.0	straight
SS09-16S-15.0-17.0	straight
SS09-17I-10.0-12.0	straight
SS09-18I-23.0-25.0	straight
SS09-18I-17.0-19.0	straight
SS09-17I-5.0-7.0	straight
SS09-20S-10.0-12.0	straight
SS09-19I-31.0-33.0	1:5
SS09-20I-25-27	straight
SS09-20S-22.0-24.0	straight
SS09-19I-29.0-31.0	1:5
SS09-20I-32-34.0	1:5
SS09-21S-5.0-7.0	straight
SS09-23S-5.0-7.0	straight
SS09-15I-21.0-23.0	straight
SS09-15I-17.0-19.0	straight

RESULTS

The results are presented in the following Tables. Also enclosed are the data packages containing all relevant data.

TABLE VO-1.0
3095-0222
EA ENGINEERING
EPA TCL VOLATILE ORGANICS

Aqueous

All values are ug/L.

Client Sample I.D.	Method Blank	TB 022795		Quant. Limits with no Dilution
Lab Sample I.D.	VBLKDL	0222003		
Method Blank I.D.	VBLKDL	VBLKDL		
Dilution Factor	1.00	1.00		
Chloromethane	U	U		10
Bromomethane	U	U		10
Vinyl Chloride	U	U		10
Chloroethane	U	U		10
Methylene Chloride	U	U		10
Acetone	10	U		10
Carbon Disulfide	U	U		10
1,1-Dichloroethene	U	U		10
1,1-Dichloroethane	U	U		10
1,2-Dichloroethene (total)	U	U		10
Chloroform	U	U		10
1,2-Dichloroethane	U	U		10
2-Butanone	U	U		10
1,1,1-Trichloroethane	U	U		10
Carbon Tetrachloride	U	U		10
Bromodichloromethane	U	U		10
1,2-Dichloropropane	U	U		10
cis-1,3-Dichloropropene	U	U		10
Trichloroethene	U	U		10
Dibromochloromethane	U	U		10
1,1,2-Trichloroethane	U	U		10
Benzene	U	U		10
trans-1,3-Dichloropropene	U	U		10
Bromoform	U	U		10
4-Methyl-2-Pentanone	U	U		10
2-Hexanone	U	U		10
Tetrachloroethene	U	U		10
1,1,2,2-Tetrachloroethane	U	U		10
Toluene	U	U		10
Chlorobenzene	U	U		10
Ethylbenzene	U	U		10
Styrene	U	U		10
Xylene (total)	U	U		10
Date Received		03/01/95		
Date Extracted	N/A	N/A		
Date Analyzed	03/01/95	03/02/95		

See Appendix for qualifier definitions
Note: Compound detection limit = quantitation limit x dilution factor

Soil

TABLE VO-1.1
3095-0222
EA ENGINEERING
EPA TCL VOLATILE ORGANICS

All values are ug/Kg dry weight basis.

Client Sample I.D.	Method Blank	SS09-MW22 S-0.0-2.0	SS09-MW22 S-5.0-7.0	Quant. Limits with no Dilution
Lab Sample I.D.	VBLKBV	0222018	0222019	
Method Blank I.D.	VBLKBV	VBLKBV	VBLKBV	
Dilution Factor	1.00	1.19	7.04	
Chloromethane	U	U	U	10
Bromomethane	U	U	U	10
Vinyl Chloride	U	U	U	10
Chloroethane	U	U	U	10
Methylene Chloride	U	U	U	10
Acetone	U	110	820	10
Carbon Disulfide	U	U	U	10
1,1-Dichloroethene	U	U	U	10
1,1-Dichloroethane	U	U	U	10
1,2-Dichloroethene (total)	U	U	U	10
Chloroform	U	U	U	10
1,2-Dichloroethane	U	U	U	10
2-Butanone	U	U	95	10
1,1,1-Trichloroethane	U	U	U	10
Carbon Tetrachloride	U	U	U	10
Bromodichloromethane	U	U	U	10
1,2-Dichloropropane	U	U	U	10
cis-1,3-Dichloropropene	U	U	U	10
Trichloroethene	U	U	U	10
Dibromochloromethane	U	U	U	10
1,1,2-Trichloroethane	U	U	U	10
Benzene	U	U	U	10
trans-1,3-Dichloropropene	U	U	U	10
Bromoform	U	U	U	10
4-Methyl-2-Pentanone	U	U	U	10
2-Hexanone	U	U	U	10
Tetrachloroethene	U	U	U	10
1,1,2,2-Tetrachloroethane	U	U	U	10
Toluene	1J	2JB	U	10
Chlorobenzene	U	U	U	10
Ethylbenzene	U	U	U	10
Styrene	U	U	U	10
Xylene (total)	U	U	U	10
Date Received		03/08/95	03/08/95	
Date Extracted	N/A	N/A	N/A	
Date Analyzed	03/15/95	03/15/95	03/15/95	

See Appendix for qualifier definitions
Note: Compound detection limit = quantitation limit x dilution factor

TABLE VO-1.2
3095-0222
EA ENGINEERING
EPA TCL VOLATILE ORGANICS

Soil
Medium

All values are ug/Kg dry weight basis.

Client Sample I.D.	Method Blank	SS09-15I-17.0-19.0	SS09-15I-21.0-23.0	Quant. Limits with no Dilution
Lab Sample I.D.	VBLKDT	0222001	0222002	
Method Blank I.D.	VBLKDT	VBLKDT	VBLKDT	
Dilution Factor	1.00	1.23	1.20	
Chloromethane	U	U	U	1200
Bromomethane	U	U	U	1200
Vinyl Chloride	U	U	U	1200
Chloroethane	U	U	U	1200
Methylene Chloride	U	U	U	1200
Acetone	U	6600	9600	1200
Carbon Disulfide	U	U	U	1200
1,1-Dichloroethene	U	U	U	1200
1,1-Dichloroethane	U	U	U	1200
1,2-Dichloroethene (total)	U	U	U	1200
Chloroform	U	U	U	1200
1,2-Dichloroethane	U	U	U	1200
2-Butanone	U	U	U	1200
1,1,1-Trichloroethane	U	U	U	1200
Carbon Tetrachloride	U	U	U	1200
Bromodichloromethane	U	U	U	1200
1,2-Dichloropropane	U	U	U	1200
cis-1,3-Dichloropropene	U	U	U	1200
Trichloroethene	U	U	U	1200
Dibromochloromethane	U	U	U	1200
1,1,2-Trichloroethane	U	580J	U	1200
Benzene	U	U	U	1200
trans-1,3-Dichloropropene	U	U	U	1200
Bromoform	U	U	U	1200
4-Methyl-2-Pentanone	U	U	U	1200
2-Hexanone	U	U	U	1200
Tetrachloroethene	U	U	U	1200
1,1,2,2-Tetrachloroethane	U	U	U	1200
Toluene	U	U	U	1200
Chlorobenzene	U	U	U	1200
Ethylbenzene	U	U	U	1200
Styrene	U	U	U	1200
Xylene (total)	U	U	U	1200
Date Received		03/01/95	03/01/95	
Date Extracted	N/A	N/A	N/A	
Date Analyzed	03/11/95	03/11/95	03/11/95	

See Appendix for qualifier definitions
Note: Compound detection limit = quantitation limit x dilution factor

TABLE VO-1.3
3095-0222
EA ENGINEERING
EPA TCL VOLATILE ORGANICS

Soil
Medium

All values are ug/Kg dry weight basis.

Client Sample I.D.	Method Blank	SS09-16S-10.0-12.0	SS09-16S-15.0-17.0	Quant. Limits with no Dilution
Lab Sample I.D.	VBLKBS	0222004	0222005	
Method Blank I.D.	VBLKBS	VBLKBS	VBLKBS	
Dilution Factor	1.00	1.15	1.26	
Chloromethane	U	U	U	1200
Bromomethane	U	U	U	1200
Vinyl Chloride	U	U	U	1200
Chloroethane	U	U	U	1200
Methylene Chloride	U	U	U	1200
Acetone	1900	4200B	8100B	1200
Carbon Disulfide	U	U	U	1200
1,1-Dichloroethene	U	U	U	1200
1,1-Dichloroethane	U	U	U	1200
1,2-Dichloroethene (total)	U	U	180J	1200
Chloroform	U	U	U	1200
1,2-Dichloroethane	U	U	U	1200
2-Butanone	U	U	U	1200
1,1,1-Trichloroethane	U	U	U	1200
Carbon Tetrachloride	U	U	U	1200
Bromodichloromethane	U	U	U	1200
1,2-Dichloropropane	U	U	U	1200
cis-1,3-Dichloropropene	U	U	U	1200
Trichloroethene	U	U	U	1200
Dibromochloromethane	U	U	U	1200
1,1,2-Trichloroethane	U	U	U	1200
Benzene	U	U	U	1200
trans-1,3-Dichloropropene	U	U	U	1200
Bromoform	U	U	U	1200
4-Methyl-2-Pentanone	U	U	U	1200
2-Hexanone	U	U	U	1200
Tetrachloroethene	U	U	U	1200
1,1,2,2-Tetrachloroethane	U	U	U	1200
Toluene	U	U	3600	1200
Chlorobenzene	U	U	U	1200
Ethylbenzene	U	U	1100J	1200
Styrene	U	U	U	1200
Xylene (total)	U	130J	6500	1200
Date Received		03/03/95	03/03/95	
Date Extracted	N/A	N/A	N/A	
Date Analyzed	03/11/95	03/11/95	03/11/95	

See Appendix for qualifier definitions
Note: Compound detection limit = quantitation limit x dilution factor

TABLE VO-1.4
3095-0222
EA ENGINEERING
EPA TCL VOLATILE ORGANICS

Soil
Medium

All values are ug/Kg dry weight basis.

Client Sample I.D.	SS09-17I -5.0-7.0	SS09-17I- 10.0-12.0	SS09-18I- 17.0-19.0	Quant. Limits with no Dilution
Lab Sample I.D.	0222006	0222007	0222008	
Method Blank I.D.	VBLKBS	VBLKBS	VBLKBS	
Dilution Factor	1.11	1.12	1.16	
Chloromethane	U	U	U	1200
Bromomethane	U	U	U	1200
Vinyl Chloride	U	U	U	1200
Chloroethane	U	U	U	1200
Methylene Chloride	U	U	U	1200
Acetone	22000B	18000B	2100B	1200
Carbon Disulfide	U	U	U	1200
1,1-Dichloroethene	U	U	U	1200
1,1-Dichloroethane	U	U	U	1200
1,2-Dichloroethene (total)	U	U	U	1200
Chloroform	U	U	U	1200
1,2-Dichloroethane	U	U	U	1200
2-Butanone	U	U	U	1200
1,1,1-Trichloroethane	U	U	U	1200
Carbon Tetrachloride	U	U	U	1200
Bromodichloromethane	U	U	U	1200
1,2-Dichloropropane	U	U	U	1200
cis-1,3-Dichloropropene	U	U	U	1200
Trichloroethene	U	U	U	1200
Dibromochloromethane	U	U	U	1200
1,1,2-Trichloroethane	U	U	U	1200
Benzene	U	U	U	1200
trans-1,3-Dichloropropene	U	U	U	1200
Bromoform	U	U	U	1200
4-Methyl-2-Pentanone	U	U	U	1200
2-Hexanone	U	U	U	1200
Tetrachloroethene	U	U	U	1200
1,1,2,2-Tetrachloroethane	U	U	U	1200
Toluene	U	U	270J	1200
Chlorobenzene	U	U	U	1200
Ethylbenzene	U	U	170J	1200
Styrene	U	U	U	1200
Xylene (total)	U	U	400J	1200
Date Received	03/03/95	03/03/95	03/03/95	
Date Extracted	N/A	N/A	N/A	
Date Analyzed	03/11/95	03/11/95	03/11/95	

See Appendix for qualifier definitions
Note: Compound detection limit = quantitation limit x dilution factor

TABLE VO-1.5
3095-0222
EA ENGINEERING
EPA TCL VOLATILE ORGANICS

Soil
Medium

All values are ug/Kg dry weight basis.

Client Sample I.D.	SS09-18I-23.0-25.0			Quant. Limits with no Dilution
Lab Sample I.D.	0222009			
Method Blank I.D.	VBLKBS			
Dilution Factor	1.23			
Chloromethane	U			1200
Bromomethane	U			1200
Vinyl Chloride	U			1200
Chloroethane	U			1200
Methylene Chloride	U			1200
Acetone	5000B			1200
Carbon Disulfide	U			1200
1,1-Dichloroethene	U			1200
1,1-Dichloroethane	U			1200
1,2-Dichloroethene (total)	U			1200
Chloroform	U			1200
1,2-Dichloroethane	U			1200
2-Butanone	U			1200
1,1,1-Trichloroethane	U			1200
Carbon Tetrachloride	U			1200
Bromodichloromethane	U			1200
1,2-Dichloropropane	U			1200
cis-1,3-Dichloropropene	U			1200
Trichloroethene	U			1200
Dibromochloromethane	U			1200
1,1,2-Trichloroethane	U			1200
Benzene	U			1200
trans-1,3-Dichloropropene	U			1200
Bromoform	U			1200
4-Methyl-2-Pentanone	U			1200
2-Hexanone	U			1200
Tetrachloroethene	U			1200
1,1,2,2-Tetrachloroethane	U			1200
Toluene	U			1200
Chlorobenzene	U			1200
Ethylbenzene	U			1200
Styrene	U			1200
Xylene (total)	U			1200
Date Received	03/03/95			
Date Extracted	N/A			
Date Analyzed	03/11/95			

See Appendix for qualifier definitions
Note: Compound detection limit = quantitation limit x dilution factor

TABLE VO-1.6
3095-0222
EA ENGINEERING
EPA TCL VOLATILE ORGANICS

Soil
Medium

All values are ug/Kg dry weight basis.

Client Sample I.D.	Method Blank	SS09-19I-29.0-31.0	SS09-19I-31.0-33.0	Quant. Limits with no Dilution
Lab Sample I.D.	VBLKBT	0222010	0222011	
Method Blank I.D.	VBLKBT	VBLKBT	VBLKBT	
Dilution Factor	1.00	5.32	6.67	
Chloromethane	U	U	U	1200
Bromomethane	U	U	U	1200
Vinyl Chloride	U	U	U	1200
Chloroethane	U	U	U	1200
Methylene Chloride	U	1700J	2700J	1200
Acetone	U	10000	20000	1200
Carbon Disulfide	U	U	U	1200
1,1-Dichloroethene	U	U	U	1200
1,1-Dichloroethane	U	U	U	1200
1,2-Dichloroethene (total)	U	U	1400J	1200
Chloroform	U	U	U	1200
1,2-Dichloroethane	U	U	U	1200
2-Butanone	U	U	U	1200
1,1,1-Trichloroethane	U	U	U	1200
Carbon Tetrachloride	U	U	U	1200
Bromodichloromethane	U	U	U	1200
1,2-Dichloropropane	U	U	U	1200
cis-1,3-Dichloropropene	U	U	U	1200
Trichloroethene	U	69000	150000	1200
Dibromochloromethane	U	U	U	1200
1,1,2-Trichloroethane	U	U	U	1200
Benzene	U	U	U	1200
trans-1,3-Dichloropropene	U	U	U	1200
Bromoform	U	U	U	1200
4-Methyl-2-Pentanone	U	U	U	1200
2-Hexanone	U	U	U	1200
Tetrachloroethene	U	4200J	U	1200
1,1,2,2-Tetrachloroethane	U	14000	51000	1200
Toluene	U	U	U	1200
Chlorobenzene	U	U	U	1200
Ethylbenzene	U	U	U	1200
Styrene	U	U	U	1200
Xylene (total)	U	U	U	1200
Date Received		03/07/95	03/07/95	
Date Extracted	N/A	N/A	N/A	
Date Analyzed	03/13/95	03/13/95	03/13/95	

See Appendix for qualifier definitions
Note: Compound detection limit = quantitation limit x dilution factor

TABLE VO-1.7
3095-0222
EA ENGINEERING
EPA TCL VOLATILE ORGANICS

Soil
Medium

All values are ug/Kg dry weight basis.

Client Sample I.D.	SS09-20S-10.0-12.0	SS09-20S-22.0-24.0	SS09-20 I-25-27	Quant. Limits with no Dilution
Lab Sample I.D.	0222012	0222013	0222014	
Method Blank I.D.	VBLKBT	VBLKBT	VBLKBT	
Dilution Factor	1.15	1.28	1.32	
Chloromethane	U	U	U	1200
Bromomethane	U	U	U	1200
Vinyl Chloride	U	U	U	1200
Chloroethane	U	U	U	1200
Methylene Chloride	500J	U	470J	1200
Acetone	6100	2800	4500	1200
Carbon Disulfide	U	U	U	1200
1,1-Dichloroethene	U	U	U	1200
1,1-Dichloroethane	U	U	U	1200
1,2-Dichloroethene (total)	U	1200J	460J	1200
Chloroform	U	140J	140J	1200
1,2-Dichloroethane	U	U	U	1200
2-Butanone	U	U	U	1200
1,1,1-Trichloroethane	U	U	U	1200
Carbon Tetrachloride	U	U	U	1200
Bromodichloromethane	U	U	U	1200
1,2-Dichloropropane	U	U	U	1200
cis-1,3-Dichloropropene	U	U	U	1200
Trichloroethene	930J	1500J	4000	1200
Dibromochloromethane	U	U	U	1200
1,1,2-Trichloroethane	U	U	U	1200
Benzene	U	U	U	1200
trans-1,3-Dichloropropene	U	U	U	1200
Bromoform	U	U	U	1200
4-Methyl-2-Pentanone	U	U	U	1200
2-Hexanone	U	U	U	1200
Tetrachloroethene	U	U	U	1200
1,1,2,2-Tetrachloroethane	270J	U	2900	1200
Toluene	U	U	U	1200
Chlorobenzene	U	U	U	1200
Ethylbenzene	U	U	U	1200
Styrene	U	U	U	1200
Xylene (total)	U	U	U	1200
Date Received	03/07/95	03/07/95	03/07/95	
Date Extracted	N/A	N/A	N/A	
Date Analyzed	03/13/95	03/13/95	03/13/95	

See Appendix for qualifier definitions
Note: Compound detection limit = quantitation limit x dilution factor

TABLE VO-1.8
3095-0222
EA ENGINEERING
EPA TCL VOLATILE ORGANICS

Soil
Medium

All values are ug/Kg dry weight basis.

Client Sample I.D.	SS09-20 I-25-27 MS	SS09-20 I-25-27 MSD	SS09-21S-15.0-17.0	Quant. Limits with no Dilution
Lab Sample I.D.	0222014MS	0222014MSD	0222017	
Method Blank I.D.	VBLKBT	VBLKBT	VBLKBT	
Dilution Factor	1.32	1.32	1.35	
Chloromethane	U	U	U	1200
Bromomethane	U	U	U	1200
Vinyl Chloride	U	U	U	1200
Chloroethane	U	U	U	1200
Methylene Chloride	610J	550J	410J	1200
Acetone	4100	4000	13000	1200
Carbon Disulfide	U	U	U	1200
1,1-Dichloroethene	4600X	3800X	U	1200
1,1-Dichloroethane	U	U	U	1200
1,2-Dichloroethene (total)	1200J	920J	U	1200
Chloroform	120J	U	U	1200
1,2-Dichloroethane	U	U	U	1200
2-Butanone	U	U	U	1200
1,1,1-Trichloroethane	U	U	U	1200
Carbon Tetrachloride	U	U	U	1200
Bromodichloromethane	U	U	U	1200
1,2-Dichloropropane	U	U	U	1200
cis-1,3-Dichloropropene	U	U	U	1200
Trichloroethene	13000X	13000X	U	1200
Dibromochloromethane	U	U	U	1200
1,1,2-Trichloroethane	U	U	U	1200
Benzene	7600X	7600X	U	1200
trans-1,3-Dichloropropene	U	U	U	1200
Bromoform	U	U	U	1200
4-Methyl-2-Pentanone	U	U	U	1200
2-Hexanone	U	U	U	1200
Tetrachloroethene	U	U	U	1200
1,1,2,2-Tetrachloroethane	2600	3000	U	1200
Toluene	7600X	7500X	U	1200
Chlorobenzene	7600X	7800X	U	1200
Ethylbenzene	U	U	U	1200
Styrene	U	U	U	1200
Xylene (total)	U	U	U	1200
Date Received	03/07/95	03/07/95	03/07/95	
Date Extracted	N/A	N/A	N/A	
Date Analyzed	03/13/95	03/13/95	03/13/95	

See Appendix for qualifier definitions
Note: Compound detection limit = quantitation limit x dilution factor

TABLE VO-1.9
3095-0222
EA ENGINEERING
EPA TCL VOLATILE ORGANICS

Soil
Medium

All values are ug/Kg dry weight basis.

Client Sample I.D.	Method Blank	SS09-MW23 S-5.0-7.0		Quant. Limits with no Dilution
Lab Sample I.D.	VBLKD2	0222020		
Method Blank I.D.	VBLKD2	VBLKD2		
Dilution Factor	1.00	1.18		
Chloromethane	U	U		1200
Bromomethane	U	U		1200
Vinyl Chloride	U	U		1200
Chloroethane	U	U		1200
Methylene Chloride	U	U		1200
Acetone	U	21000		1200
Carbon Disulfide	U	U		1200
1,1-Dichloroethene	U	U		1200
1,1-Dichloroethane	U	U		1200
1,2-Dichloroethene (total)	U	U		1200
Chloroform	U	U		1200
1,2-Dichloroethane	U	U		1200
2-Butanone	U	U		1200
1,1,1-Trichloroethane	U	U		1200
Carbon Tetrachloride	U	U		1200
Bromodichloromethane	U	U		1200
1,2-Dichloropropane	U	U		1200
cis-1,3-Dichloropropene	U	U		1200
Trichloroethene	U	1500		1200
Dibromochloromethane	U	U		1200
1,1,2-Trichloroethane	U	U		1200
Benzene	U	U		1200
trans-1,3-Dichloropropene	U	U		1200
Bromoform	U	U		1200
4-Methyl-2-Pentanone	U	U		1200
2-Hexanone	U	U		1200
Tetrachloroethene	U	U		1200
1,1,2,2-Tetrachloroethane	U	U		1200
Toluene	U	U		1200
Chlorobenzene	U	U		1200
Ethylbenzene	U	U		1200
Styrene	U	U		1200
Xylene (total)	U	U		1200
Date Received		03/08/95		
Date Extracted	N/A	N/A		
Date Analyzed	03/17/95	03/17/95		

See Appendix for qualifier definitions
Note: Compound detection limit = quantitation limit x dilution factor

TABLE VO-1.10
3095-0222
EA ENGINEERING
EPA TCL VOLATILE ORGANICS

Soil
Medium

All values are ug/Kg dry weight basis.

Client Sample I.D.	Method Blank	SS09-20I -32-34.0	SS09-21S -5.0-7.0	Quant. Limits with no Dilution
Lab Sample I.D.	VBLKBU	0222015	0222016	
Method Blank I.D.	VBLKBU	VBLKBU	VBLKBU	
Dilution Factor	1.00	7.04	1.09	
Chloromethane	U	U	U	1200
Bromomethane	U	U	U	1200
Vinyl Chloride	U	U	U	1200
Chloroethane	U	U	U	1200
Methylene Chloride	180J	U	290JB	1200
Acetone	1700	15000B	7900B	1200
Carbon Disulfide	U	U	U	1200
1,1-Dichloroethene	U	U	U	1200
1,1-Dichloroethane	U	U	U	1200
1,2-Dichloroethene (total)	U	1900J	U	1200
Chloroform	U	U	U	1200
1,2-Dichloroethane	U	U	U	1200
2-Butanone	U	U	U	1200
1,1,1-Trichloroethane	U	U	U	1200
Carbon Tetrachloride	U	U	U	1200
Bromodichloromethane	U	U	U	1200
1,2-Dichloropropane	U	U	U	1200
cis-1,3-Dichloropropene	U	U	U	1200
Trichloroethene	U	80000	U	1200
Dibromochloromethane	U	U	U	1200
1,1,2-Trichloroethane	U	U	U	1200
Benzene	U	U	U	1200
trans-1,3-Dichloropropene	U	U	U	1200
Bromoform	U	U	U	1200
4-Methyl-2-Pentanone	U	U	U	1200
2-Hexanone	U	U	U	1200
Tetrachloroethene	U	U	U	1200
1,1,2,2-Tetrachloroethane	U	86000	U	1200
Toluene	U	U	U	1200
Chlorobenzene	U	U	U	1200
Ethylbenzene	U	U	780J	1200
Styrene	U	U	U	1200
Xylene (total)	U	U	2000	1200
Date Received		03/07/95	03/07/95	
Date Extracted	N/A	N/A	N/A	
Date Analyzed	03/14/95	03/14/95	03/14/95	

See Appendix for qualifier definitions
Note: Compound detection limit = quantitation limit x dilution factor

TABLE VO-2.0
3095-0222
EA ENGINEERING
VOLATILE TENTATIVELY IDENTIFIED COMPOUNDS

Sample Identification: Method Blank VBLKDL

CAS#	Compound	RT	Estimated Concentration, ug/L
	None detected		

Sample Identification: TB 022795

CAS#	Compound	RT	Estimated Concentration, ug/L
	None detected		

Sample Identification: Method Blank VBLKBV

CAS#	Compound	RT	Estimated Concentration, ug/Kg
	None detected		

Sample Identification: SS09-22S-0.0-2.0

CAS#	Compound	RT	Estimated Concentration, ug/Kg
	Unknown siloxane	25.94	42J

Sample Identification: SS09-22S-5.0-7.0

CAS#	Compound	RT	Estimated Concentration, ug/Kg
67630	2-Propanol	6.91	78JN
	Unknown siloxane	26.00	37J

See Appendix for qualifier definitions.

TABLE VO-2.1
3095-0222
EA ENGINEERING
VOLATILE TENTATIVELY IDENTIFIED COMPOUNDS

Sample Identification: Method Blank VBLKDT

CAS#	Compound	RT	Estimated Concentration, ug/Kg
	None detected		

Sample Identification: SS09-15I-17.0-19.0

CAS#	Compound	RT	Estimated Concentration, ug/Kg
108872	Cyclohexane, methyl	10.89	12,000JN
	Unknown branched alkane	9.28	6,800J
	Unknown branched alkane	20.45	5,200J
	Unknown branched alkane	22.96	5,100J
	Unknown	22.26	4,400J
	Unknown branched alkane	19.91	3,800J
	Unknown	21.80	3,600J
	Unknown	21.58	3,400J
	Unknown C_4 alkylbenzene	22.81	3,400J
	Unknown	23.89	3,200J

Sample Identification: SS09-15I-21.0-23.0

CAS#	Compound	RT	Estimated Concentration, ug/Kg
67630	Isopropyl alcohol	5.08	1,900JN

Sample Identification: Method Blank VBLKBS

CAS#	Compound	RT	Estimated Concentration, ug/Kg
	None detected		

See Appendix for qualifier definitions.

TABLE VO-2.2
3095-0222
EA ENGINEERING
VOLATILE TENTATIVELY IDENTIFIED COMPOUNDS

Sample Identification: SS09-16S-10.0-12.0

CAS#	Compound	RT	Estimated Concentration, ug/Kg
556672	Cyclotetrasiloxane, octamethyl	23.12	1,300JN
	Unknown	25.44	720J
	Unknown	26.40	720J

Sample Identification: SS09-16S-15.0-17.0

CAS#	Compound	RT	Estimated Concentration, ug/Kg
	Unknown C_3 alkylbenzene	23.51	58,000J
	Unknown C_3 alkylbenzene	24.15	56,000J
	Unknown C_4 alkylbenzene	25.25	43,000J
	Unknown	22.71	37,000J
	Unknown branched cycloalkane	22.30	36,000J
	Unknown C_3 alkylbenzene	23.38	28,000J
	Unknown C_4 alkylbenzene	24.56	28,000J
	Unknown branched alkane	22.60	28,000J
	Unknown C_4 alkylbenzene	25.14	25,000J
	Unknown	24.40	25,000J

Sample Identification: SS09-17I-5.0-7.0

CAS#	Compound	RT	Estimated Concentration, ug/Kg
556672	Cyclotetrasiloxane, octamethyl	23.04	1,200JN

Sample Identification: SS09-17I-10.0-12.0

CAS#	Compound	RT	Estimated Concentration, ug/Kg
	Unknown	6.91	5,700J
	Unknown alkane	24.31	1,000J
	Unknown alkane	27.12	800J

See Appendix for qualifier definitions.

TABLE VO-2.3
3095-0222
EA ENGINEERING
VOLATILE TENTATIVELY IDENTIFIED COMPOUNDS

Sample Identification: SS09-18I-17.0-19.0

CAS#	Compound	RT	Estimated Concentration, ug/Kg
	Unknown C_3 alkylbenzene	23.54	12,000J
	Unknown alkane	13.00	6,000J
108872	Cyclohexane, methyl	14.43	5,100JN
	Unknown	24.59	4,800J
	Unknown C_3 alkylbenzene	24.17	4,300J
	Unknown	22.32	3,900J
	Unknown branched alkane	24.03	3,700J
	Unknown	23.10	3,300J
	Unknown branched alkane	22.08	3,000J
	Unknown branched alkane	24.42	2,900J

Sample Identification: SS09-18I-23.0-25.0

CAS#	Compound	RT	Estimated Concentration, ug/Kg
	Unknown	27.15	2,000J
	Unknown alkane	23.59	1,500J
	Unknown branched alkane	24.06	790J

Sample Identification: Method Blank VBLKBT

CAS#	Compound	RT	Estimated Concentration, ug/Kg
	None detected		

Sample Identification: SS09-19I-29.0-31.0

CAS#	Compound	RT	Estimated Concentration, ug/Kg
	None detected		

See Appendix for qualifier definitions.

TABLE VO-2.4
3095-0222
EA ENGINEERING
VOLATILE TENTATIVELY IDENTIFIED COMPOUNDS

Sample Identification: SS09-19I-31.0-33.0

CAS#	Compound	RT	Estimated Concentration, ug/Kg
	Unknown siloxane	25.95	8,000J

Sample Identification: SS09-20S-10.0-12.0

CAS#	Compound	RT	Estimated Concentration, ug/Kg
	Unknown	4.12	810J

Sample Identification: SS09-20S-22.0-24.0

CAS#	Compound	RT	Estimated Concentration, ug/Kg
	Unknown siloxane	25.96	1,200J

Sample Identification: SS09-20I-25-27

CAS#	Compound	RT	Estimated Concentration, ug/Kg
	Unknown siloxane	25.99	1,900J
	Unknown	4.24	1,600J

Sample Identification: SS09-21S-15.0-17.0

CAS#	Compound	RT	Estimated Concentration, ug/Kg
67630	2-Propanol	6.92	17,000JN

See Appendix for qualifier definitions.

TABLE VO-2.5
3095-0222
EA ENGINEERING
VOLATILE TENTATIVELY IDENTIFIED COMPOUNDS

Sample Identification: Method Blank VBLKD2

CAS#	Compound	RT	Estimated Concentration, ug/Kg
	None detected		

Sample Identification: SS09-23S-5.0-7.0

CAS#	Compound	RT	Estimated Concentration, ug/Kg
67630	Isopropyl alcohol	5.13	2,100JN

Sample Identification: Method Blank VBLKBU

CAS#	Compound	RT	Estimated Concentration, ug/Kg
	None detected		

Sample Identification: SS09-20I-32-34.0

CAS#	Compound	RT	Estimated Concentration, ug/Kg
	None detected		

See Appendix for qualifier definitions.

TABLE VO-2.6
3095-0222
EA ENGINEERING
VOLATILE TENTATIVELY IDENTIFIED COMPOUNDS

Sample Identification: SS09-21S-5.0-7.0

CAS#	Compound	RT	Estimated Concentration, ug/Kg
	Unknown C_3 alkylbenzene	24.22	15,000J
	Unknown C_3 alkylbenzene	23.59	9,300J
	Unknown	26.40	8,600J
	Unknown branched cycloalkane	24.66	7,600J
	Unknown branched cycloalkane	22.40	6,800J
	Unknown	25.43	6,500J
	Unknown C_3 alkylbenzene	23.50	6,500J
	Unknown C_4 alkylbenzene	25.79	6,000J
	Unknown C_4 alkylbenzene	26.12	4,900J
	Unknown C_4 alkylbenzene	27.23	4,900J

See Appendix for qualifier definitions.

ORGANICS APPENDIX

U - Indicates that the compound was analyzed for but not detected.

J - Indicates that the compound was analyzed for and determined to be present in the sample. The mass spectrum of the compound meets the identification criteria of the method. The concentration listed is an estimated value, which is less than the specified minimum detection limit but is greater than zero.

B - This flag is used when the analyte is found in the blanks as well as the sample. It indicates possible sample contamination and warns the data user to use caution when applying the results of this analyte.

N - Indicates that the compound was analyzed for but not requested as an analyte. Value will not be listed on tabular result sheet.

S - Estimated due to surrogate outliers.

X - Matrix spike compound.

(1) - Cannot be separated.

(2) - Decomposes to azobenzene. Measured and calibrated as azobenzene.

A - This flag indicates that a TIC is a suspected aldol condensation product.

E - Indicates that it exceeds calibration curve range.

D - This flag identifies all compounds identified in an analysis at a secondary dilution factor.

C - Confirmed by GC/MS.

T - Compound present in TCLP blank.

P - This flag is used for a pesticide/aroclor target analyte when there is a greater than 25 percent difference for detected concentrations between the two GC columns (see Form X).

STATE CERTIFICATIONS

In some instances it may be necessary for environmental data to be reported to a regulatory authority with reference to a certified laboratory. For your convenience, the laboratory identification numbers for the IEA-Connecticut laboratory are provided in the following table. Many states certify laboratories for specific parameters or tests within a category (i.e. method 325.2 for wastewater). The information in the following table indicates the lab is certified in a general category of testing such as drinking water or wastewater analysis. The laboratory should be contacted directly if parameter-specific certification information is required.

IEA-Connecticut
Certification Summary (as of June 1993)

State	Responsible Agency	Certification	Lab Number
Connecticut	Department of Health Services	Drinking Water, Wastewater	PH-0497
Kansas	Department of Health and Environmental Services	Drinking Water, Wastewater/Solid, Hazardous Waste	E-210/E-1185
Massachusetts	Department of Environmental Protection	Potable/Non-Potable Water	CT023
New Hampshire	Department of Environmental Services	Drinking Water, Wastewater	252891
New Jersey	Department of Environmental Protection	Drinking Water, Wastewater	46410
New York	Department of Health	CLP, Drinking Water, Wastewater, Solid/ Hazardous Waste	10602
North Carolina	Division of Environmental Management	Wastewater	388
Rhode Island	Department of Health	Chemistry...Non-Potable Water and Wastewater	A43
California	Department of Health Services	Hazardous Waste	1778

30950-0222
EA ENGINEERING
SAMPLE SUMMARY

CLIENT ID	LAB ID	MATRIX	DATE COLLECTED	DATE RECEIVED
SS09-15I-17.0-19.0	0222001	SOIL	02/27/95	03/01/95
SS09-15I-21.0-23.0	0222002	SOIL	02/27/95	03/01/95
TB 022795	0222003	LIQUID		03/01/95
SS09-16S-10.0-12.0	0222004	SOIL	03/01/95	03/03/95
SS09-16S-15.0-17.0	0222005	SOIL	03/01/95	03/03/95
SS09-17I-5.0-7.0	0222006	SOIL	03/01/95	03/03/95
SS09-17I-10.0-12.0	0222007	SOIL	03/01/95	03/03/95
SS09-18I-17.0-19.0	0222008	SOIL	03/02/95	03/03/95
SS09-18I-23.0-25.0	0222009	SOIL	03/02/95	03/03/95
SS09-19I-29.0-31.0	0222010	SOIL	03/03/95	03/07/95
SS09-19I-31.0-33.0	0222011	SOIL	03/03/95	03/07/95
SS09-20S-10.0-12.0	0222012	SOIL	03/03/95	03/07/95
SS09-20S-22.0-24.0	0222013	SOIL	03/03/95	03/07/95
SS09-20I-25-27	0222014	SOIL	03/03/95	03/07/95
SS09-20I-32-34.0	0222015	SOIL	03/03/95	03/07/95
SS09-21S-5.0-7.0	0222016	SOIL	03/06/95	03/07/95
SS09-21S-15.0-17.0	0222017	SOIL	03/06/95	03/07/95
SS09-MW22S-0.0-2.0	0222018	SOIL	03/07/95	03/08/95
SS09-MW22S-5.0-7.0	0222019	SOIL	03/07/95	03/08/95
SS09-MW23S-5.0-7.0	0222020	SOIL	03/07/95	03/08/95

IEA, INC.
ANALYTICAL SUMMARY

EA ENGINEERING
NCBC DAVISVILLE
3095-0222

#SAMPLES	MATRIX	#REPS	DESCRIPTION
19	SOIL	1	TARGET COMPOUND VOLS + TICS

SAMPLE IDs : SS09-17I-5.0-7.0, SS09-17I-10.0-12.0,
: SS09-18I-17.0-19.0, SS09-18I-23.0-25.0,
: SS09-15I-17.0-19.0, SS09-16S-10.0-12.0,
: SS09-15I-21.0-23.0, SS09-20S-22.0-24.0,
: SS09-20S-10.0-12.0, SS09-19I-29.0-31.0,
: SS09-20I-25-27, SS09-20I-32-34.0,
: SS09-21S-5.0-7.0, SS09-21S-15.0-17.0,
: SS09-19I-31.0-33.0, SS09-MW23S-5.0-7.0,
: SS09-16S-15.0-17.0, SS09-MW22S-0.0-2.0,
: SS09-MW22S-5.0-7.0

1 QC-MS	SOIL	1	FOR FOLLOWING PARAMETERS : TARGET COMPOUND VOLATILES

SAMPLE IDs : SS09-20I-25-27

1 QC-MSD	SOIL	1	FOR FOLLOWING PARAMETERS : TARGET COMPOUND VOLATILES

SAMPLE IDs : SS09-20I-25-27

1 QC-TB	AQUEOUS	1	FOR FOLLOWING PARAMETERS : TARGET COMPOUND VOLS + TICS

SAMPLE IDs : TB 022795

IEA
An Aquarion Company

200 Monroe Turnpike
Monroe, Connecticut 06468

Phone 203·261·4458
Fax 203·268·5346

March 27, 1995

Mr. Nick Lanney
EA Engineering
2 Commercial Street
Sharon, MA 02067

MAR 28 1995

Dear Mr. Lanney:

Please find enclosed the analytical results of 3 samples received at our laboratory on March 8, 1995. This report contains sections addressing the following information at a minimum:

- sample summary
- analytical methodology
- state certifications
- definitions of data qualifiers and terminology
- analytical results
- chain-of-custody

IEA Report #3095-0222A	Purchase Order #L007326
Project ID: NCBC Davisville	

Copies of this analytical report and supporting data are maintained in our files for a minimum of five years unless special arrangements have been made. Unless specifically indicated, all analytical testing was performed at this laboratory location and no portion of the testing was subcontracted.

We appreciate your selection of our services and welcome any questions or suggestions you may have relative to this report. Please contact your customer service representative at (203) 261-4458 for any additional information. Thank you for utilizing our services; we hope you will consider us for your future analytical needs.

I have reviewed and approved the enclosed data for final release.

Very truly yours,

Jeffrey C. Curran
Laboratory Manager

JCC/mt

3095-0222A
EA ENGINEERING
PROJECT SUMMARY

The samples were analyzed for the parameters listed in the Analytical Summary Table.

METHODOLOGY/DISCUSSION

Volatile Organics - Volatile organics were determined by purge and trap GC/MS using USEPA CLP Protocols, OLM01.9. The instrumentation used was a Tekmar Dynamic Headspace Concentrator interfaced with a Hewlett-Packard Model 5972A GC/MS/DS.

The following samples were analyzed as medium level soils and/or diluted due to high target compound concentrations:

Sample ID	Dilution
SS09-23S-10.0-12.0	1:20
SS09-24S-0.0-2.0	straight
SS09-24S-5.0-7.0	straight

RESULTS

The results are presented in the following Tables. Also enclosed are the data packages containing all relevant data.

TABLE VO-1.0
3095-0222A
EA ENGINEERING
EPA TCL VOLATILE ORGANICS

Soil
Medium

All values are ug/Kg dry weight basis.

Client Sample I.D.	Method Blank	SS09-MW23S -10.0-12.0	SS09-MW24 S-0.0-2.0	Quant. Limits with no Dilution
Lab Sample I.D.	VBLKD2	0222021	0222022	
Method Blank I.D.	VBLKD2	VBLKD2	VBLKD2	
Dilution Factor	1.00	23.8	1.06	
Chloromethane	U	U	U	1200
Bromomethane	U	U	U	1200
Vinyl Chloride	U	U	U	1200
Chloroethane	U	U	U	1200
Methylene Chloride	U	U	U	1200
Acetone	U	400000	3300	1200
Carbon Disulfide	U	U	U	1200
1,1-Dichloroethene	U	U	U	1200
1,1-Dichloroethane	U	U	U	1200
1,2-Dichloroethene (total)	U	U	U	1200
Chloroform	U	U	U	1200
1,2-Dichloroethane	U	U	U	1200
2-Butanone	U	U	U	1200
1,1,1-Trichloroethane	U	U	U	1200
Carbon Tetrachloride	U	U	U	1200
Bromodichloromethane	U	U	U	1200
1,2-Dichloropropane	U	U	U	1200
cis-1,3-Dichloropropene	U	U	U	1200
Trichloroethene	U	U	U	1200
Dibromochloromethane	U	U	U	1200
1,1,2-Trichloroethane	U	U	U	1200
Benzene	U	U	U	1200
trans-1,3-Dichloropropene	U	U	U	1200
Bromoform	U	U	U	1200
4-Methyl-2-Pentanone	U	U	U	1200
2-Hexanone	U	U	U	1200
Tetrachloroethene	U	U	U	1200
1,1,2,2-Tetrachloroethane	U	U	U	1200
Toluene	U	U	U	1200
Chlorobenzene	U	U	U	1200
Ethylbenzene	U	U	U	1200
Styrene	U	U	U	1200
Xylene (total)	U	U	U	1200
Date Received		03/08/95	03/08/95	
Date Extracted	N/A	N/A	N/A	
Date Analyzed	03/17/95	03/17/95	03/17/95	

See Appendix for qualifier definitions
Note: Compound detection limit = quantitation limit x dilution factor

TABLE VO-1.1
3095-0222A
EA ENGINEERING
EPA TCL VOLATILE ORGANICS

Soil
Medium

All values are ug/Kg dry weight basis.

Client Sample I.D.	SS09-MW24 S-5.0-7.0			Quant. Limits with no Dilution
Lab Sample I.D.	0222023			
Method Blank I.D.	VBLKD2			
Dilution Factor	1.20			
Chloromethane	U			1200
Bromomethane	U			1200
Vinyl Chloride	U			1200
Chloroethane	U			1200
Methylene Chloride	410J			1200
Acetone	4200			1200
Carbon Disulfide	U			1200
1,1-Dichloroethene	U			1200
1,1-Dichloroethane	U			1200
1,2-Dichloroethene (total)	U			1200
Chloroform	U			1200
1,2-Dichloroethane	U			1200
2-Butanone	U			1200
1,1,1-Trichloroethane	U			1200
Carbon Tetrachloride	U			1200
Bromodichloromethane	U			1200
1,2-Dichloropropane	U			1200
cis-1,3-Dichloropropene	U			1200
Trichloroethene	U			1200
Dibromochloromethane	U			1200
1,1,2-Trichloroethane	U			1200
Benzene	U			1200
trans-1,3-Dichloropropene	U			1200
Bromoform	U			1200
4-Methyl-2-Pentanone	U			1200
2-Hexanone	U			1200
Tetrachloroethene	U			1200
1,1,2,2-Tetrachloroethane	U			1200
Toluene	U			1200
Chlorobenzene	U			1200
Ethylbenzene	U			1200
Styrene	U			1200
Xylene (total)	U			1200
Date Received	03/08/95			
Date Extracted	N/A			
Date Analyzed	03/17/95			

See Appendix for qualifier definitions
Note: Compound detection limit = quantitation limit x dilution factor

TABLE VO-2.0
3095-0222A
EA ENGINEERING
VOLATILE TENTATIVELY IDENTIFIED COMPOUNDS

Sample Identification: Method Blank VBLKD2

CAS#	Compound	RT	Estimated Concentration, ug/Kg
	None detected		

Sample Identification: SS09-23S-10.0-12.0

CAS#	Compound	RT	Estimated Concentration, ug/Kg
	Unknown alcohol	4.92	25,000J
	Unknown	3.26	15,000J

Sample Identification: SS09-24S-0.0-2.0

CAS#	Compound	RT	Estimated Concentration, ug/Kg
	Unknown	23.02	8,500J
	Unknown branched alkane	23.56	5,700J
	Unknown	22.42	5,600J
	Unknown	21.44	4,900J
	Unknown branched alkane	21.13	4,900J
	Unknown	24.44	4,200J
	Unknown	23.37	4,100J
	Unknown branched alkane	20.50	3,800J
	Unknown alkene	23.96	3,400J
	Unknown	21.64	3,400J

Sample Identification: SS09-24S-5.0-7.0

CAS#	Compound	RT	Estimated Concentration, ug/Kg
	Unknown	3.47	1,000J
	Unknown	3.37	920J
	Unknown	5.75	830J

See Appendix for qualifier definitions.

ORGANICS APPENDIX

U - Indicates that the compound was analyzed for but not detected.

J - Indicates that the compound was analyzed for and determined to be present in the sample. The mass spectrum of the compound meets the identification criteria of the method. The concentration listed is an estimated value, which is less than the specified minimum detection limit but is greater than zero.

B - This flag is used when the analyte is found in the blanks as well as the sample. It indicates possible sample contamination and warns the data user to use caution when applying the results of this analyte.

N - Indicates that the compound was analyzed for but not requested as an analyte. Value will not be listed on tabular result sheet.

S - Estimated due to surrogate outliers.

X - Matrix spike compound.

(1) - Cannot be separated.

(2) - Decomposes to azobenzene. Measured and calibrated as azobenzene.

A - This flag indicates that a TIC is a suspected aldol condensation product.

E - Indicates that it exceeds calibration curve range.

D - This flag identifies all compounds identified in an analysis at a secondary dilution factor.

C - Confirmed by GC/MS.

T - Compound present in TCLP blank.

P - This flag is used for a pesticide/aroclor target analyte when there is a greater than 25 percent difference for detected concentrations between the two GC columns (see Form X).

STATE CERTIFICATIONS

In some instances it may be necessary for environmental data to be reported to a regulatory authority with reference to a certified laboratory. For your convenience, the laboratory identification numbers for the IEA-Connecticut laboratory are provided in the following table. Many states certify laboratories for specific parameters or tests within a category (i.e. method 325.2 for wastewater). The information in the following table indicates the lab is certified in a general category of testing such as drinking water or wastewater analysis. The laboratory should be contacted directly if parameter-specific certification information is required.

IEA-Connecticut
Certification Summary (as of June 1993)

State	Responsible Agency	Certification	Lab Number
Connecticut	Department of Health Services	Drinking Water, Wastewater	PH-0497
Kansas	Department of Health and Environmental Services	Drinking Water, Wastewater/Solid, Hazardous Waste	E-210/E-1185
Massachusetts	Department of Environmental Protection	Potable/Non-Potable Water	CT023
New Hampshire	Department of Environmental Services	Drinking Water, Wastewater	252891
New Jersey	Department of Environmental Protection	Drinking Water, Wastewater	46410
New York	Department of Health	CLP, Drinking Water, Wastewater, Solid/ Hazardous Waste	10602
North Carolina	Division of Environmental Management	Wastewater	388
Rhode Island	Department of Health	Chemistry...Non-Potable Water and Wastewater	A43
California	Department of Health Services	Hazardous Waste	1778

30950-0222A
EA ENGINEERING
SAMPLE SUMMARY

CLIENT ID	LAB ID	MATRIX	DATE COLLECTED	DATE RECEIVED
SS09-MW23S-10.0-12.0	0222021	SOIL	03/07/95	03/08/95
SS09-MW24S-0.0-2.0	0222022	SOIL	03/07/95	03/08/95
SS09-MW24S-5.0-7.0	0222023	SOIL	03/07/95	03/08/95

IEA, INC.
ANALYTICAL SUMMARY

EA ENGINEERING
NCBC DAVISVILLE
3095-0222A

#SAMPLES	MATRIX	#REPS	DESCRIPTION
3	SOIL	1	TARGET COMPOUND VOLS + TICS

SAMPLE IDs : SS09-MW23S-10.0-12.0, SS09-MW24S-0.0-2.0,
: SS09-MW24S-5.0-7.0

APPENDIX L

ANALYTICAL LAB REPORTS—WATER SAMPLES

IEA
An Aquarion Company

200 Monroe Turnpike
Monroe, Connecticut 06468

Phone 203·261·4458
Fax 203·268·5346

May 10, 1995

RECEIVED
MAY 11 1995
EA Engineering, Science, and Technology
New England Operations

Mr. Nick Lanney
EA Engineering
2 Commercial Street
Sharon, MA 02067

Dear Mr. Lanney:

Please find enclosed the analytical results of one sample received at our laboratory on April 28, 1995. This report contains sections addressing the following information at a minimum:

- sample summary
- analytical methodology
- state certifications
- definitions of data qualifiers and terminology
- analytical results
- chain-of-custody

IEA Report #3095-0519	Project ID: NCBC DAVISVILLE

Copies of this analytical report and supporting data are maintained in our files for a minimum of five years unless special arrangements have been made. Unless specifically indicated, all analytical testing was performed at this laboratory location and no portion of the testing was subcontracted.

We appreciate your selection of our services and welcome any questions or suggestions you may have relative to this report. Please contact your customer service representative at (203) 261-4458 for any additional information. Thank you for utilizing our services; we hope you will consider us for your future analytical needs.

I have reviewed and approved the enclosed data for final release.

Very truly yours,

Jeffrey C. Curran
Laboratory Manager

JCC/adj

3095-0519
EA ENGINEERING
PROJECT SUMMARY

The sample was analyzed for the parameters listed in the Analytical Summary Table.

METHODOLOGY/DISCUSSION

Metals - ICAP metals were determined by ICP using either a JA61 simultaneous ICAP using the USEPA CLP ILM03.0 SOW.

No problems occurred during analysis. All appropriate protocols were employed. All data appears to be consistent.

Classical Chemistry - Classical chemistry analyses were conducted according to Methods for Chemical Analysis of Water and Wastes, USEPA 600/4-83-020 using the following methods: chloride - 325.2; and total dissolved solids - 160.1.

Salinity was calculated based upon the chloride results.

No problems were encountered.

RESULTS

The results are presented in the following Tables. Also enclosed is the data package containing all relevant data.

Aqueous

TABLE AS-1.0
3095-0519
EA ENGINEERING
MISCELLANEOUS METALS

All values are ug/L.

Client Sample I.D.	SITE09 -HARBOR			
Lab Sample I.D.	0519001			
Sodium	9240000			

See Appendix for qualifier definitions

TABLE CC-1.0
3095-0519
EA ENGINEERING
MISCELLANEOUS

All values are mg/L.

Parameter	SITE09-HARBOR
Chloride	15,200
Salinity	25,100
Total Dissolved Solids	31,500

INORGANICS APPENDIX

C - Concentration qualifiers

U - Indicates analyte result less than instrument detection limit (IDL)

B - Indicates analyte result between IDL and contract required detection limit (CRDL)

Q - QC qualifiers

E - Reported value is estimated because of the presence of interference

M - Duplicate injection precision not met

N - Spiked sample recovery not within control limits

S - The reported value was determined by the method of standard additions (MSA)

W - Post-digest spike recovery furnace analysis was out of 85-115 percent control limit, while sample absorbance was less than 50 percent of spike absorbance

* - Duplicate analysis not within control limit

+ - Correlation coefficient for MSA is less than 0.995

M - Method codes

P - ICP

A - Flame AA

F - Furnace AA

CV - Cold vapor AA (manual)

C - Cyanide

NR - Not Required

NC - Not Calculated as per protocols

STATE CERTIFICATIONS

In some instances it may be necessary for environmental data to be reported to a regulatory authority with reference to a certified laboratory. For your convenience, the laboratory identification numbers for the IEA-Connecticut laboratory are provided in the following table. Many states certify laboratories for specific parameters or tests within a category (i.e. method 325.2 for wastewater). The information in the following table indicates the lab is certified in a general category of testing such as drinking water or wastewater analysis. The laboratory should be contacted directly if parameter-specific certification information is required.

IEA-Connecticut
Certification Summary (as of June 1993)

State	Responsible Agency	Certification	Lab Number
Connecticut	Department of Health Services	Drinking Water, Wastewater	PH-0497
Kansas	Department of Health and Environmental Services	Drinking Water, Wastewater/Solid, Hazardous Waste	E-210/E-1185
Massachusetts	Department of Environmental Protection	Potable/Non-Potable Water	CT023
New Hampshire	Department of Environmental Services	Drinking Water, Wastewater	252891
New Jersey	Department of Environmental Protection	Drinking Water, Wastewater	46410
New York	Department of Health	CLP, Drinking Water, Wastewater, Solid/ Hazardous Waste	10602
North Carolina	Division of Environmental Management	Wastewater	388
Rhode Island	Department of Health	Chemistry...Non-Potable Water and Wastewater	A43
California	Department of Health Services	Hazardous Waste	1778

30950-0519
EA ENGINEERING
SAMPLE SUMMARY

CLIENT ID	LAB ID	MATRIX	DATE COLLECTED	DATE RECEIVED
SITE09-HARBOR	0519001	LIQUID	04/27/95	04/28/95

IEA, INC.
ANALYTICAL SUMMARY

EA ENGINEERING
NCBC DAVISVILLE
3095-0519

#SAMPLES	MATRIX	#REPS	DESCRIPTION
1	AQUEOUS	1	MISC. ICAP METALS : NA
		1	CHLORIDE
		1	SALINITY
		1	TOTAL DISSOLVED SOLIDS

SAMPLE IDs : SITE09-HARBOR

3095-0419
EA ENGINEERING
PROJECT SUMMARY

The samples were analyzed for the parameters listed in the Analytical Summary Table.

METHODOLOGY/DISCUSSION

Volatile Organics - Volatile organics were determined by purge and trap GC/MS using USEPA CLP Protocols, OLM01.9. The instrumentation used was a Tekmar Dynamic Headspace Concentrator interfaced with a Hewlett-Packard Model 5995 GC/MS/DS.

Due to high target compound concentrations, the following samples were analyzed at dilutions:

Sample ID	Dilution
MW09-2S	1:2
MW09-4S	1:5

Metals - ICAP metals were determined by ICP using either a JA61 simultaneous ICAP or a PE6500XR sequential ICP using the USEPA CLP ILM03.0 SOW.

No problems occurred during analysis. All appropriate protocols were employed. All data appears to be consistent.

Classical Chemistry - Classical chemistry analyses were conducted according to Methods for Chemical Analysis of Water and Wastes, USEPA 600/4-83-020 using the following methods: total dissolved solids - 160.1; chloride - 325.2.

Salinity was calculated based upon the chloride results.

No problems were encountered.

RESULTS

The results are presented in the following Tables. Also enclosed are the data packages containing all relevant data.

Aqueous

TABLE VO-1.0
3095-0419
EA ENGINEERING
EPA TCL VOLATILE ORGANICS

All values are ug/L.

Client Sample I.D.	Method Blank	MW09-1S	MW09-22S	Quant. Limits with no Dilution
Lab Sample I.D.	VBLKGG	0419001	0419002	
Method Blank I.D.	VBLKGG	VBLKGG	VBLKGG	
Dilution Factor	1.00	1.00	1.00	
Chloromethane	U	U	U	10
Bromomethane	U	U	U	10
Vinyl Chloride	U	U	U	10
Chloroethane	U	U	U	10
Methylene Chloride	U	U	U	10
Acetone	10	18B	38B	10
Carbon Disulfide	U	U	U	10
1,1-Dichloroethene	U	U	U	10
1,1-Dichloroethane	U	U	U	10
1,2-Dichloroethene (total)	U	U	U	10
Chloroform	U	U	U	10
1,2-Dichloroethane	U	U	U	10
2-Butanone	3J	U	U	10
1,1,1-Trichloroethane	U	U	U	10
Carbon Tetrachloride	U	U	U	10
Bromodichloromethane	U	U	U	10
1,2-Dichloropropane	U	U	U	10
cis-1,3-Dichloropropene	U	U	U	10
Trichloroethene	U	U	U	10
Dibromochloromethane	U	U	U	10
1,1,2-Trichloroethane	U	U	U	10
Benzene	U	U	2J	10
trans-1,3-Dichloropropene	U	U	U	10
Bromoform	U	U	U	10
4-Methyl-2-Pentanone	U	U	U	10
2-Hexanone	U	U	U	10
Tetrachloroethene	U	U	U	10
1,1,2,2-Tetrachloroethane	U	U	U	10
Toluene	U	U	U	10
Chlorobenzene	U	U	U	10
Ethylbenzene	U	U	U	10
Styrene	U	U	U	10
Xylene (total)	U	U	U	10
Date Received		04/08/95	04/08/95	
Date Extracted	N/A	N/A	N/A	
Date Analyzed	04/11/95	04/11/95	04/11/95	

See Appendix for qualifier definitions
Note: Compound detection limit = quantitation limit x dilution factor

Aqueous

TABLE VO-1.1
3095-0419
EA ENGINEERING
EPA TCL VOLATILE ORGANICS

All values are ug/L.

Client Sample I.D.	Method Blank	MW09-2S	MW09-3D	Quant. Limits with no Dilution
Lab Sample I.D.	VBLKGH	0419003	0419004	
Method Blank I.D.	VBLKGH	VBLKGH	VBLKGH	
Dilution Factor	1.00	2.00	1.00	
Chloromethane	U	U	U	10
Bromomethane	U	U	U	10
Vinyl Chloride	U	U	19	10
Chloroethane	U	U	U	10
Methylene Chloride	U	U	U	10
Acetone	13	160B	42B	10
Carbon Disulfide	U	U	U	10
1,1-Dichloroethene	U	U	U	10
1,1-Dichloroethane	U	U	U	10
1,2-Dichloroethene (total)	U	U	130	10
Chloroform	U	U	U	10
1,2-Dichloroethane	U	U	0.8J	10
2-Butanone	U	U	U	10
1,1,1-Trichloroethane	U	U	U	10
Carbon Tetrachloride	U	U	U	10
Bromodichloromethane	U	U	U	10
1,2-Dichloropropane	U	U	U	10
cis-1,3-Dichloropropene	U	U	U	10
Trichloroethene	U	U	4J	10
Dibromochloromethane	U	U	U	10
1,1,2-Trichloroethane	U	U	U	10
Benzene	U	U	U	10
trans-1,3-Dichloropropene	U	U	U	10
Bromoform	U	U	U	10
4-Methyl-2-Pentanone	U	U	U	10
2-Hexanone	U	U	U	10
Tetrachloroethene	U	U	U	10
1,1,2,2-Tetrachloroethane	U	U	U	10
Toluene	U	U	U	10
Chlorobenzene	U	2J	U	10
Ethylbenzene	U	2J	U	10
Styrene	U	U	U	10
Xylene (total)	U	U	U	10
Date Received		04/08/95	04/08/95	
Date Extracted	N/A	N/A	N/A	
Date Analyzed	04/13/95	04/13/95	04/13/95	

See Appendix for qualifier definitions
Note: Compound detection limit = quantitation limit x dilution factor

TABLE VO-1.2
3095-0419
EA ENGINEERING
EPA TCL VOLATILE ORGANICS

Aqueous

All values are ug/L.

Client Sample I.D.	MW09-3D MS	MW09-3D MSD	MW09-13S	Quant. Limits with no Dilution
Lab Sample I.D.	0419004MS	0419004MSD	0419005	
Method Blank I.D.	VBLKGH	VBLKGH	VBLKGH	
Dilution Factor	1.00	1.00	1.00	
Chloromethane	U	U	U	10
Bromomethane	U	U	U	10
Vinyl Chloride	19	18	U	10
Chloroethane	U	U	U	10
Methylene Chloride	U	U	U	10
Acetone	33B	48B	10B	10
Carbon Disulfide	4J	U	U	10
1,1-Dichloroethene	39X	38X	U	10
1,1-Dichloroethane	U	U	U	10
1,2-Dichloroethene (total)	130	120	U	10
Chloroform	U	U	U	10
1,2-Dichloroethane	U	U	U	10
2-Butanone	U	U	U	10
1,1,1-Trichloroethane	U	U	U	10
Carbon Tetrachloride	U	U	U	10
Bromodichloromethane	U	U	U	10
1,2-Dichloropropane	U	U	U	10
cis-1,3-Dichloropropene	U	U	U	10
Trichloroethene	46X	44X	U	10
Dibromochloromethane	U	U	U	10
1,1,2-Trichloroethane	U	U	U	10
Benzene	42X	43X	U	10
trans-1,3-Dichloropropene	U	U	U	10
Bromoform	U	U	U	10
4-Methyl-2-Pentanone	U	U	U	10
2-Hexanone	U	U	U	10
Tetrachloroethene	U	U	U	10
1,1,2,2-Tetrachloroethane	U	U	U	10
Toluene	42X	40X	U	10
Chlorobenzene	40X	40X	U	10
Ethylbenzene	U	U	U	10
Styrene	U	U	U	10
Xylene (total)	U	U	U	10
Date Received	04/08/95	04/08/95	04/08/95	
Date Extracted	N/A	N/A	N/A	
Date Analyzed	04/13/95	04/13/95	04/13/95	

See Appendix for qualifier definitions
Note: Compound detection limit = quantitation limit x dilution factor

TABLE VO-1.3
3095-0419
EA ENGINEERING
EPA TCL VOLATILE ORGANICS

Aqueous

All values are ug/L.

Client Sample I.D.	MW09-13D	MW09-QADUP1	MW09-QADUP2	Quant. Limits with no Dilution
Lab Sample I.D.	0419006	0419007	0419008	
Method Blank I.D.	VBLKGH	VBLKGH	VBLKGH	
Dilution Factor	1.00	1.00	1.00	
Chloromethane	U	U	U	10
Bromomethane	U	U	U	10
Vinyl Chloride	U	19	U	10
Chloroethane	U	U	U	10
Methylene Chloride	U	U	U	10
Acetone	U	83B	8JB	10
Carbon Disulfide	U	U	U	10
1,1-Dichloroethene	U	U	U	10
1,1-Dichloroethane	U	U	U	10
1,2-Dichloroethene (total)	U	130	U	10
Chloroform	U	U	U	10
1,2-Dichloroethane	U	1J	U	10
2-Butanone	U	U	U	10
1,1,1-Trichloroethane	U	U	U	10
Carbon Tetrachloride	U	U	U	10
Bromodichloromethane	U	U	U	10
1,2-Dichloropropane	U	U	U	10
cis-1,3-Dichloropropene	U	U	U	10
Trichloroethene	U	3J	U	10
Dibromochloromethane	U	U	U	10
1,1,2-Trichloroethane	U	U	U	10
Benzene	U	U	U	10
trans-1,3-Dichloropropene	U	U	U	10
Bromoform	U	U	U	10
4-Methyl-2-Pentanone	U	U	U	10
2-Hexanone	U	U	U	10
Tetrachloroethene	U	U	U	10
1,1,2,2-Tetrachloroethane	U	U	U	10
Toluene	U	U	U	10
Chlorobenzene	U	U	U	10
Ethylbenzene	U	U	U	10
Styrene	U	U	U	10
Xylene (total)	U	U	U	10
Date Received	04/08/95	04/08/95	04/08/95	
Date Extracted	N/A	N/A	N/A	
Date Analyzed	04/13/95	04/13/95	04/13/95	

See Appendix for qualifier definitions
Note: Compound detection limit = quantitation limit x dilution factor

Aqueous

TABLE VO-1.4
3095-0419
EA ENGINEERING
EPA TCL VOLATILE ORGANICS

All values are ug/L.

Client Sample I.D.	FB 040795	MW09-4S		Quant. Limits with no Dilution
Lab Sample I.D.	0419009	0419010		
Method Blank I.D.	VBLKGH	VBLKGH		
Dilution Factor	1.00	5.00		
Chloromethane	U	U		10
Bromomethane	U	U		10
Vinyl Chloride	U	U		10
Chloroethane	U	U		10
Methylene Chloride	U	8J		10
Acetone	20B	390B		10
Carbon Disulfide	U	U		10
1,1-Dichloroethene	U	U		10
1,1-Dichloroethane	U	U		10
1,2-Dichloroethene (total)	U	U		10
Chloroform	U	U		10
1,2-Dichloroethane	U	U		10
2-Butanone	U	U		10
1,1,1-Trichloroethane	U	U		10
Carbon Tetrachloride	U	U		10
Bromodichloromethane	U	U		10
1,2-Dichloropropane	U	U		10
cis-1,3-Dichloropropene	U	U		10
Trichloroethene	U	U		10
Dibromochloromethane	U	U		10
1,1,2-Trichloroethane	U	U		10
Benzene	U	U		10
trans-1,3-Dichloropropene	U	U		10
Bromoform	U	U		10
4-Methyl-2-Pentanone	U	U		10
2-Hexanone	U	U		10
Tetrachloroethene	U	U		10
1,1,2,2-Tetrachloroethane	U	U		10
Toluene	3J	2J		10
Chlorobenzene	U	U		10
Ethylbenzene	U	U		10
Styrene	U	U		10
Xylene (total)	U	U		10
Date Received	04/08/95	04/08/95		
Date Extracted	N/A	N/A		
Date Analyzed	04/13/95	04/13/95		

See Appendix for qualifier definitions
Note: Compound detection limit = quantitation limit x dilution factor

Aqueous

TABLE VOA-2.0
3095-0419
EA ENGINEERING
VOLATILE TENTATIVELY IDENTIFIED COMPOUNDS

Related Method Blank: VBLKGG

Lab Sample Id: 0419001 Client Sample Id: MW09-1S

CAS#	Compound	RT	Estimated Conc., ug/L
	UNKNOWN ALCOHOL	7.62	38J

Lab Sample Id: 0419002 Client Sample Id: MW09-22S

CAS#	Compound	RT	Estimated Conc., ug/L
	UNKNOWN ALCOHOL	7.62	32J
	UNKNOWN ISOMER OF DIETHYL BE	25.32	8J
	UNKNOWN C4 ALKYLBENZENE	27.34	7J
	UNKNOWN C4 ALKYLBENZENE	26.59	5J

See Appendix for qualifier definitions

TABLE VOA-2.1
3095-0419
EA ENGINEERING
VOLATILE TENTATIVELY IDENTIFIED COMPOUNDS

Aqueous

Related Method Blank: VBLKGH

Lab Sample Id: 0419003 Client Sample Id: MW09-2S

CAS#	Compound	RT	Estimated Conc., ug/L
	UNKNOWN ALCOHOL	7.59	86J
556672	CYCLOTETRASILOXANE, OCTAMETH	23.33	11JN

Lab Sample Id: 0419004 Client Sample Id: MW09-3D

CAS#	Compound	RT	Estimated Conc., ug/L
	UNKNOWN ALCOHOL	7.60	60J
556672	CYCLOTETRASILOXANE, OCTAMETH	23.30	8JN

Lab Sample Id: 0419005 Client Sample Id: MW09-13S

CAS#	Compound	RT	Estimated Conc., ug/L
	UNKNOWN ALCOHOL	7.63	8J

Lab Sample Id: 0419006 Client Sample Id: MW09-13D

CAS#	Compound	RT	Estimated Conc., ug/L
	UNKNOWN	7.64	13J

Lab Sample Id: 0419007 Client Sample Id: MW09-QADUP1

CAS#	Compound	RT	Estimated Conc., ug/L
	UNKNOWN ALCOHOL	7.61	34J

See Appendix for qualifier definitions

TABLE VOA-2.2
3095-0419
EA ENGINEERING
VOLATILE TENTATIVELY IDENTIFIED COMPOUNDS

Aqueous

Related Method Blank: VBLKGH

Lab Sample Id: 0419008 Client Sample Id: MW09-QADUP2

CAS#	Compound	RT	Estimated Conc., ug/L
	UNKNOWN	7.65	8J

Lab Sample Id: 0419009 Client Sample Id: FB 040795

CAS#	Compound	RT	Estimated Conc., ug/L
	UNKNOWN ALCOHOL	7.64	1100J
108214	ACETIC ACID, 1-METHYLETHYL E	12.59	17JN

Lab Sample Id: 0419010 Client Sample Id: MW09-4S

CAS#	Compound	RT	Estimated Conc., ug/L
	UNKNOWN ALCOHOL	7.61	24J

See Appendix for qualifier definitions

TABLE AS-1.0
3095-0419
EA ENGINEERING
MISCELLANEOUS METALS

Aqueous

All values are ug/L.

Client Sample I.D.	MW09-3D	MW09-3D D	MW09-3D S	MW09-13D
Lab Sample I.D.	0419004	0419004D	0419004S	0419006
Sodium	52800	54100	NR	7500

See Appendix for qualifier definitions

TABLE AS-1.1
3095-0419
EA ENGINEERING
MISCELLANEOUS METALS

Aqueous

All values are ug/L.

Client Sample I.D.	MW09-QADUP1	MW09-4S	MW09-2S	MW09-13S
Lab Sample I.D.	0419007	0419010	0419015	0419016
Sodium	55100	3590B	16900	5410

See Appendix for qualifier definitions

Aqueous

TABLE AS-1.2
3095-0419
EA ENGINEERING
MISCELLANEOUS METALS

All values are ug/L.

Client Sample I.D.	MW09-22S	MW09-1S	MW09-QADUP2	
Lab Sample I.D.	0419017	0419018	0419019	
Sodium	9920	11100	7690	

See Appendix for qualifier definitions

TABLE CC-1.0
3095-0419
EA ENGINEERING
MISCELLANEOUS

All values are mg/L.

Parameter	MW09-1S	MW09-22S	MW09-2S	MW09-13S	MW09-QADUP2
Chloride	14.0	13.7	70.0	11.1	8.3
Salinity	23.1	22.6	115	18.3	13.7
Total Dissolved Solids	365	339	409	69.0	102

Parameter	MW09-4S	MW09-3D	MW09-13D	MW09-QADUP1
Chloride	3.6	42.3	8.0	42.3
Salinity	6.0	69.7	13.2	69.7
Total Dissolved Solids	47.0	297	113	302

ORGANICS APPENDIX

U - Indicates that the compound was analyzed for but not detected.

J - Indicates that the compound was analyzed for and determined to be present in the sample. The mass spectrum of the compound meets the identification criteria of the method. The concentration listed is an estimated value, which is less than the specified minimum detection limit but is greater than zero.

B - This flag is used when the analyte is found in the blanks as well as the sample. It indicates possible sample contamination and warns the data user to use caution when applying the results of this analyte.

N - Indicates that the compound was analyzed for but not requested as an analyte. Value will not be listed on tabular result sheet.

S - Estimated due to surrogate outliers.

X - Matrix spike compound.

(1) - Cannot be separated.

(2) - Decomposes to azobenzene. Measured and calibrated as azobenzene.

A - This flag indicates that a TIC is a suspected aldol condensation product.

E - Indicates that it exceeds calibration curve range.

D - This flag identifies all compounds identified in an analysis at a secondary dilution factor.

C - Confirmed by GC/MS.

T - Compound present in TCLP blank.

P - This flag is used for a pesticide/aroclor target analyte when there is a greater than 25 percent difference for detected concentrations between the two GC columns (see Form X).

INORGANICS APPENDIX

C - Concentration qualifiers

U - Indicates analyte result less than instrument detection limit (IDL)

B - Indicates analyte result between IDL and contract required detection limit (CRDL)

Q - QC qualifiers

E - Reported value is estimated because of the presence of interference

M - Duplicate injection precision not met

N - Spiked sample recovery not within control limits

S - The reported value was determined by the method of standard additions (MSA)

W - Post-digest spike recovery furnace analysis was out of 85-115 percent control limit, while sample absorbance was less than 50 percent of spike absorbance

* - Duplicate analysis not within control limit

+ - Correlation coefficient for MSA is less than 0.995

M - Method codes

P - ICP

A - Flame AA

F - Furnace AA

CV - Cold vapor AA (manual)

C - Cyanide

NR - Not Required

NC - Not Calculated as per protocols

STATE CERTIFICATIONS

In some instances it may be necessary for environmental data to be reported to a regulatory authority with reference to a certified laboratory. For your convenience, the laboratory identification numbers for the IEA-Connecticut laboratory are provided in the following table. Many states certify laboratories for specific parameters or tests within a category (i.e. method 325.2 for wastewater). The information in the following table indicates the lab is certified in a general category of testing such as drinking water or wastewater analysis. The laboratory should be contacted directly if parameter-specific certification information is required.

IEA-Connecticut
Certification Summary (as of June 1993)

State	Responsible Agency	Certification	Lab Number
Connecticut	Department of Health Services	Drinking Water, Wastewater	PH-0497
Kansas	Department of Health and Environmental Services	Drinking Water, Wastewater/Solid, Hazardous Waste	E-210/E-1185
Massachusetts	Department of Environmental Protection	Potable/Non-Potable Water	CT023
New Hampshire	Department of Environmental Services	Drinking Water, Wastewater	252891
New Jersey	Department of Environmental Protection	Drinking Water, Wastewater	46410
New York	Department of Health	CLP, Drinking Water, Wastewater, Solid/ Hazardous Waste	10602
North Carolina	Division of Environmental Management	Wastewater	388
Rhode Island	Department of Health	Chemistry...Non-Potable Water and Wastewater	A43
California	Department of Health Services	Hazardous Waste-	1778

30950-0419
EA ENGINEERING
SAMPLE SUMMARY

CLIENT ID	LAB ID	MATRIX	DATE COLLECTED	DATE RECEIVED
MW09-1S	0419001	LIQUID	04/07/95	04/08/95
MW09-22S	0419002	LIQUID	04/07/95	04/08/95
MW09-2S	0419003	LIQUID	04/07/95	04/08/95
MW09-3D	0419004	LIQUID	04/07/95	04/08/95
MW09-13S	0419005	LIQUID	04/07/95	04/08/95
MW09-13D	0419006	LIQUID	04/07/95	04/08/95
MW09-QADUP1	0419007	LIQUID	04/07/95	04/08/95
MW09-QADUP2	0419008	LIQUID	04/07/95	04/08/95
FB 040795	0419009	LIQUID	04/07/95	04/08/95
MW09-4S	0419010	LIQUID	04/07/95	04/08/95
MW09-4S	0419011	LIQUID	04/10/95	04/11/95
MW09-3D	0419012	LIQUID	04/10/95	04/11/95
MW09-13D	0419013	LIQUID	04/10/95	04/11/95
MW09-QADUP1	0419014	LIQUID	04/10/95	04/11/95
MW09-2S	0419015	LIQUID	04/10/95	04/11/95
MW09-13S	0419016	LIQUID	04/10/95	04/11/95
MW09-22S	0419017	LIQUID	04/10/95	04/11/95
MW09-1S	0419018	LIQUID	04/10/95	04/11/95
MW09-QADUP2	0419019	LIQUID	04/10/95	04/11/95

IEA, INC.
ANALYTICAL SUMMARY

EA ENGINEERING
NCBC
3095-0419

#SAMPLES	MATRIX	#REPS	DESCRIPTION
5	AQUEOUS	1	TARGET COMPOUND VOLS + TICS
		1	TOTAL DISSOLVED SOLIDS
		1	CHLORIDE
		1	SALINITY
SAMPLE IDs : MW09-13S, MW09-QADUP2, MW09-22S, MW09-2S, : MW09-1S			
5	AQUEOUS	1	MISC. ICAP METALS : NA
SAMPLE IDs : MW09-2S, MW09-22S, MW09-QADUP2, MW09-1S, : MW09-13S			
4	AQUEOUS	1	TARGET COMPOUND VOLS + TICS
		1	MISC. ICAP METALS : NA
SAMPLE IDs : MW09-3D, MW09-13D, MW09-QADUP1, MW09-4S			
4	AQUEOUS	1	CHLORIDE
		1	SALINITY
		1	TOTAL DISSOLVED SOLIDS
SAMPLE IDs : MW09-13D, MW09-QADUP1, MW09-4S, MW09-3D			
1 QC-FB	AQUEOUS		FOR FOLLOWING PARAMETERS :
		1	TARGET COMPOUND VOLS + TICS
SAMPLE IDs : FB 040795			
1 QC-MS	AQUEOUS		FOR FOLLOWING PARAMETERS :
		1	TARGET COMPOUND VOLATILES
SAMPLE IDs : MW09-3D			
1 QC-MSD	AQUEOUS		FOR FOLLOWING PARAMETERS :
		1	TARGET COMPOUND VOLATILES
SAMPLE IDs : MW09-3D			

IEA
An Aquarion Company

200 Monroe Turnpike
Monroe, Connecticut 06468

Phone 203·261·4458
Fax 203·268·5346

April 28, 1995

RECEIVED
MAY 01 1995
EA Engineering, Science, and Technology
New England Operations

Mr. Nick Lanney
EA Engineering
2 Commercial Street
Sharon, MA 02067

Dear Mr. Lanney:

Please find enclosed the analytical results of eight samples received at our laboratory on April 18, 1995. This report contains sections addressing the following information at a minimum:

- sample summary
- analytical methodology
- state certifications
- definitions of data qualifiers and terminology
- analytical results
- chain-of-custody

IEA Report #3095-0469	Purchase Order #29600.32
Project ID: NCBC	

Copies of this analytical report and supporting data are maintained in our files for a minimum of five years unless special arrangements have been made. Unless specifically indicated, all analytical testing was performed at this laboratory location and no portion of the testing was subcontracted.

We appreciate your selection of our services and welcome any questions or suggestions you may have relative to this report. Please contact your customer service representative at (203) 261-4458 for any additional information. Thank you for utilizing our services; we hope you will consider us for your future analytical needs.

I have reviewed and approved the enclosed data for final release.

Very truly yours,

Jeffrey C. Curran
Laboratory Manager

JCC/adj

3095-0469
EA ENGINEERING
PROJECT SUMMARY

The samples were analyzed for the parameters listed in the Analytical Summary Table.

METHODOLOGY/DISCUSSION

Volatile Organics - Volatile organics were determined by purge and trap GC/MS using USEPA CLP Protocols, OLM01.9. The instrumentation used was a Tekmar Dynamic Headspace Concentrator interfaced with a Hewlett-Packard Model 5995/5972A GC/MS/DS.

No problems were encountered.

Metals - ICAP metals were determined by ICP using either a JA61 simultaneous ICAP or a PE6500XR sequential ICP using the USEPA CLP ILM03.0 SOW.

No problems occurred during analysis. All appropriate protocols were employed. All data appears to be consistent.

Classical Chemistry - Classical chemistry analyses were conducted according to Methods for Chemical Analysis of Water and Wastes, USEPA 600/4-83-020 using the following methods: chloride - 325.2; and total dissolved - 160.1.

Salinity was calculated based upon the chloride results.

No problems were encountered.

RESULTS

The results are presented in the following Tables. Also enclosed are the data packages containing all relevant data.

Aqueous

TABLE VO-1.0
3095-0469
EA ENGINEERING
EPA TCL VOLATILE ORGANICS

All values are ug/L.

Client Sample I.D.	Method Blank	MW09-24S MS	MW09-24S MSD	Quant. Limits with no Dilution
Lab Sample I.D.	VBLKEN	0469001MS	0469001MSD	
Method Blank I.D.	VBLKEN	VBLKEN	VBLKEN	
Dilution Factor	1.00	1.00	1.00	
Chloromethane	U	U	U	10
Bromomethane	U	U	U	10
Vinyl Chloride	U	U	U	10
Chloroethane	U	U	U	10
Methylene Chloride	U	U	U	10
Acetone	29	29B	32B	10
Carbon Disulfide	U	U	U	10
1,1-Dichloroethene	U	59X	62X	10
1,1-Dichloroethane	U	U	U	10
1,2-Dichloroethene (total)	U	U	U	10
Chloroform	U	U	U	10
1,2-Dichloroethane	U	U	U	10
2-Butanone	U	U	U	10
1,1,1-Trichloroethane	U	U	U	10
Carbon Tetrachloride	U	U	U	10
Bromodichloromethane	U	U	U	10
1,2-Dichloropropane	U	U	U	10
cis-1,3-Dichloropropene	U	U	U	10
Trichloroethene	U	60X	55X	10
Dibromochloromethane	U	U	U	10
1,1,2-Trichloroethane	U	U	U	10
Benzene	U	55X	57X	10
trans-1,3-Dichloropropene	U	U	U	10
Bromoform	U	U	U	10
4-Methyl-2-Pentanone	U	U	U	10
2-Hexanone	U	U	U	10
Tetrachloroethene	U	U	U	10
1,1,2,2-Tetrachloroethane	U	1J	U	10
Toluene	U	56X	58X	10
Chlorobenzene	U	52X	55X	10
Ethylbenzene	U	U	U	10
Styrene	U	U	U	10
Xylene (total)	U	U	U	10
Date Received		04/18/95	04/18/95	
Date Extracted	N/A	N/A	N/A	
Date Analyzed	04/22/95	04/22/95	04/22/95	

See Appendix for qualifier definitions
Note: Compound detection limit = quantitation limit x dilution factor

Aqueous

TABLE VO-1.1
3095-0469
EA ENGINEERING
EPA TCL VOLATILE ORGANICS

All values are ug/L.

Client Sample I.D.	Method Blank	MW09-24S	MW09-24D	Quant. Limits with no Dilution
Lab Sample I.D.	VBLKDX	0469001	0469002	
Method Blank I.D.	VBLKDX	VBLKDX	VBLKDX	
Dilution Factor	1.00	1.00	1.00	
Chloromethane	U	U	U	10
Bromomethane	U	U	U	10
Vinyl Chloride	U	U	U	10
Chloroethane	U	U	U	10
Methylene Chloride	U	U	U	10
Acetone	16	U	48B	10
Carbon Disulfide	U	U	U	10
1,1-Dichloroethene	U	U	U	10
1,1-Dichloroethane	U	U	U	10
1,2-Dichloroethene (total)	U	U	U	10
Chloroform	U	U	9J	10
1,2-Dichloroethane	U	U	U	10
2-Butanone	U	U	U	10
1,1,1-Trichloroethane	U	U	U	10
Carbon Tetrachloride	U	U	U	10
Bromodichloromethane	U	U	U	10
1,2-Dichloropropane	U	U	U	10
cis-1,3-Dichloropropene	U	U	U	10
Trichloroethene	U	U	U	10
Dibromochloromethane	U	U	U	10
1,1,2-Trichloroethane	U	U	U	10
Benzene	U	U	U	10
trans-1,3-Dichloropropene	U	U	U	10
Bromoform	U	U	U	10
4-Methyl-2-Pentanone	U	U	U	10
2-Hexanone	U	U	U	10
Tetrachloroethene	U	U	U	10
1,1,2,2-Tetrachloroethane	U	U	U	10
Toluene	U	U	U	10
Chlorobenzene	U	U	U	10
Ethylbenzene	U	U	U	10
Styrene	U	U	U	10
Xylene (total)	U	U	U	10
Date Received		04/18/95	04/18/95	
Date Extracted	N/A	N/A	N/A	
Date Analyzed	04/20/95	04/21/95	04/21/95	

See Appendix for qualifier definitions
Note: Compound detection limit = quantitation limit x dilution factor

Aqueous

TABLE VO-1.2
3095-0469
EA ENGINEERING
EPA TCL VOLATILE ORGANICS

All values are ug/L.

Client Sample I.D.	MW09-8S	MW09-8D	MW09-20R	Quant. Limits with no Dilution
Lab Sample I.D.	0469003	0469004	0469005	
Method Blank I.D.	VBLKDX	VBLKDX	VBLKDX	
Dilution Factor	1.00	1.00	1.00	
Chloromethane	U	U	U	10
Bromomethane	U	U	U	10
Vinyl Chloride	60	5J	U	10
Chloroethane	9J	U	U	10
Methylene Chloride	U	U	U	10
Acetone	6JB	10B	11B	10
Carbon Disulfide	U	U	U	10
1,1-Dichloroethene	U	U	U	10
1,1-Dichloroethane	U	U	U	10
1,2-Dichloroethene (total)	17	6J	U	10
Chloroform	U	U	U	10
1,2-Dichloroethane	U	2J	U	10
2-Butanone	U	U	U	10
1,1,1-Trichloroethane	U	U	U	10
Carbon Tetrachloride	U	U	U	10
Bromodichloromethane	U	U	U	10
1,2-Dichloropropane	U	3J	U	10
cis-1,3-Dichloropropene	U	U	U	10
Trichloroethene	1J	U	U	10
Dibromochloromethane	U	U	U	10
1,1,2-Trichloroethane	U	U	U	10
Benzene	2J	U	U	10
trans-1,3-Dichloropropene	U	U	U	10
Bromoform	U	U	U	10
4-Methyl-2-Pentanone	U	U	U	10
2-Hexanone	U	U	U	10
Tetrachloroethene	U	U	U	10
1,1,2,2-Tetrachloroethane	U	U	U	10
Toluene	U	U	U	10
Chlorobenzene	U	U	U	10
Ethylbenzene	U	U	U	10
Styrene	U	U	U	10
Xylene (total)	U	U	U	10
Date Received	04/18/95	04/18/95	04/18/95	
Date Extracted	N/A	N/A	N/A	
Date Analyzed	04/21/95	04/21/95	04/21/95	

See Appendix for qualifier definitions
Note: Compound detection limit = quantitation limit x dilution factor

Aqueous

TABLE VO-1.3
3095-0469
EA ENGINEERING
EPA TCL VOLATILE ORGANICS

All values are ug/L.

Client Sample I.D.	MW09-7R	TB 041795	FB 041795	Quant. Limits with no Dilution
Lab Sample I.D.	0469006	0469007	0469008	
Method Blank I.D.	VBLKDX	VBLKDX	VBLKDX	
Dilution Factor	1.00	1.00	1.00	
Chloromethane	U	U	U	10
Bromomethane	U	U	U	10
Vinyl Chloride	U	U	U	10
Chloroethane	U	U	U	10
Methylene Chloride	U	U	U	10
Acetone	140B	U	94B	10
Carbon Disulfide	U	U	U	10
1,1-Dichloroethene	U	U	U	10
1,1-Dichloroethane	U	U	U	10
1,2-Dichloroethene (total)	U	U	U	10
Chloroform	U	U	U	10
1,2-Dichloroethane	U	U	8J	10
2-Butanone	9J	U	U	10
1,1,1-Trichloroethane	U	U	U	10
Carbon Tetrachloride	U	U	U	10
Bromodichloromethane	U	U	U	10
1,2-Dichloropropane	U	U	U	10
cis-1,3-Dichloropropene	U	U	U	10
Trichloroethene	U	U	U	10
Dibromochloromethane	U	U	U	10
1,1,2-Trichloroethane	U	U	U	10
Benzene	U	U	U	10
trans-1,3-Dichloropropene	U	U	U	10
Bromoform	U	U	U	10
4-Methyl-2-Pentanone	U	U	U	10
2-Hexanone	U	U	U	10
Tetrachloroethene	U	U	U	10
1,1,2,2-Tetrachloroethane	U	U	U	10
Toluene	1J	U	120	10
Chlorobenzene	U	U	U	10
Ethylbenzene	U	U	U	10
Styrene	U	U	U	10
Xylene (total)	U	U	4J	10
Date Received	04/18/95	04/18/95	04/18/95	
Date Extracted	N/A	N/A	N/A	
Date Analyzed	04/21/95	04/20/95	04/20/95	

See Appendix for qualifier definitions
Note: Compound detection limit = quantitation limit x dilution factor

Aqueous

TABLE VOA-2.0
3095-0469
EA ENGINEERING
VOLATILE TENTATIVELY IDENTIFIED COMPOUNDS

Related Method Blank: VBLKEN

Lab Sample Id: VBLKEN Client Sample Id: Method Blank

CAS#	Compound	RT	Estimated Conc., ug/L
	NONE DETECTED		

See Appendix for qualifier definitions

TABLE VOA-2.1
3095-0469
EA ENGINEERING
VOLATILE TENTATIVELY IDENTIFIED COMPOUNDS

Aqueous

Related Method Blank: VBLKDX

Lab Sample Id: VBLKDX Client Sample Id: Method Blank

CAS#	Compound	RT	Estimated Conc., ug/L
	NONE DETECTED		

Lab Sample Id: 0469001 Client Sample Id: MW09-24S

CAS#	Compound	RT	Estimated Conc., ug/L
	NONE DETECTED		

Lab Sample Id: 0469002 Client Sample Id: MW09-24D

CAS#	Compound	RT	Estimated Conc., ug/L
141-78-6	ETHYL ACETATE	9.77	140JN
	UNKNOWN ALCOHOL	5.71	42J
79-20-9	ACETIC ACID, METHYL ESTER	6.96	19JN
556-67-2	CYCLOTETRASILOXANE, OCTAMETH	20.70	5JN

Lab Sample Id: 0469003 Client Sample Id: MW09-8S

CAS#	Compound	RT	Estimated Conc., ug/L
	NONE DETECTED		

Lab Sample Id: 0469004 Client Sample Id: MW09-8D

CAS#	Compound	RT	Estimated Conc., ug/L
	NONE DETECTED		

See Appendix for qualifier definitions

Aqueous

TABLE VOA-2.2
3095-0469
EA ENGINEERING
VOLATILE TENTATIVELY IDENTIFIED COMPOUNDS

Related Method Blank: VBLKDX

Lab Sample Id: 0469005 Client Sample Id: MW09-20R

CAS#	Compound	RT	Estimated Conc., ug/L
67-63-0	ISOPROPYL ALCOHOL	6.69	16JN
	UNKNOWN ALCOHOL	5.71	9J
141-78-6	ETHYL ACETATE	9.77	6JN

Lab Sample Id: 0469006 Client Sample Id: MW09-7R

CAS#	Compound	RT	Estimated Conc., ug/L
67-63-0	ISOPROPYL ALCOHOL	6.70	220JN
	UNKNOWN ALCOHOL	5.71	7J
141-78-6	ETHYL ACETATE	9.77	6JN

Lab Sample Id: 0469007 Client Sample Id: TB 041795

CAS#	Compound	RT	Estimated Conc., ug/L
	NONE DETECTED		

Lab Sample Id: 0469008 Client Sample Id: FB 041795

CAS#	Compound	RT	Estimated Conc., ug/L
67-63-0	ISOPROPYL ALCOHOL	7.06	12000JN
2568-89-0	PROPANE, 2,2'-[METHYLENEBIS(	15.70	450JN
	UNKNOWN ALCOHOL	5.66	100J
	UNKNOWN	19.16	35J
124-18-5	DECANE	21.01	33JN
	UNKNOWN	13.66	22J
	UNKNOWN C3 ALKYLBENZENE	21.95	21J
1120-21-4	UNDECANE	22.38	16JN
	UNKNOWN C3 ALKYLBENZENE	21.45	15J
	UNKNOWN BRANCHED ALKANE	21.37	9J

See Appendix for qualifier definitions

Aqueous

TABLE AS-1.0
3095-0469
EA ENGINEERING
MISCELLANEOUS METALS

All values are ug/L.

Client Sample I.D.	MW09-24S	MW09-24S D	MW09-24S S	MW09-24D
Lab Sample I.D.	0469001	0469001D	0469001S	0469002
Sodium	6850	6830	NR	19500

See Appendix for qualifier definitions

Aqueous

TABLE AS-1.1
3095-0469
EA ENGINEERING
MISCELLANEOUS METALS

All values are ug/L.

Client Sample I.D.	MW09-8S	MW09-8D	MW09-20R	MW09-7R
Lab Sample I.D.	0469003	0469004	0469005	0469006
Sodium	177000	79500	57400	22800

See Appendix for qualifier definitions

TABLE CC-1.0
3095-0469
EA ENGINEERING
MISCELLANEOUS

All values are mg/L.

Parameter	MW09-24S	MW09-24D	MW09-8S
Chloride	12.2	19.6	244
Salinity	20.1	32.3	402
Total Dissolved Solids	226	268	974

Parameter	MW09-8D	MW09-20R	MW09-7R
Chloride	281	444	200
Salinity	463	732	330
Total Dissolved Solids	640	825	446

ORGANICS APPENDIX

U - Indicates that the compound was analyzed for but not detected.

J - Indicates that the compound was analyzed for and determined to be present in the sample. The mass spectrum of the compound meets the identification criteria of the method. The concentration listed is an estimated value, which is less than the specified minimum detection limit but is greater than zero.

B - This flag is used when the analyte is found in the blanks as well as the sample. It indicates possible sample contamination and warns the data user to use caution when applying the results of this analyte.

N - Indicates that the compound was analyzed for but not requested as an analyte. Value will not be listed on tabular result sheet.

S - Estimated due to surrogate outliers.

X - Matrix spike compound.

(1) - Cannot be separated.

(2) - Decomposes to azobenzene. Measured and calibrated as azobenzene.

A - This flag indicates that a TIC is a suspected aldol condensation product.

E - Indicates that it exceeds calibration curve range.

D - This flag identifies all compounds identified in an analysis at a secondary dilution factor.

C - Confirmed by GC/MS.

T - Compound present in TCLP blank.

P - This flag is used for a pesticide/aroclor target analyte when there is a greater than 25 percent difference for detected concentrations between the two GC columns (see Form X).

INORGANICS APPENDIX

C - Concentration qualifiers

U - Indicates analyte result less than instrument detection limit (IDL)

B - Indicates analyte result between IDL and contract required detection limit (CRDL)

Q - QC qualifiers

E - Reported value is estimated because of the presence of interference

M - Duplicate injection precision not met

N - Spiked sample recovery not within control limits

S - The reported value was determined by the method of standard additions (MSA)

W - Post-digest spike recovery furnace analysis was out of 85-115 percent control limit, while sample absorbance was less than 50 percent of spike absorbance

* - Duplicate analysis not within control limit

+ - Correlation coefficient for MSA is less than 0.995

M - Method codes

P - ICP

A - Flame AA

F - Furnace AA

CV - Cold vapor AA (manual)

C - Cyanide

NR - Not Required

NC - Not Calculated as per protocols

STATE CERTIFICATIONS

In some instances it may be necessary for environmental data to be reported to a regulatory authority with reference to a certified laboratory. For your convenience, the laboratory identification numbers for the IEA-Connecticut laboratory are provided in the following table. Many states certify laboratories for specific parameters or tests within a category (i.e. method 325.2 for wastewater). The information in the following table indicates the lab is certified in a general category of testing such as drinking water or wastewater analysis. The laboratory should be contacted directly if parameter-specific certification information is required.

IEA-Connecticut
Certification Summary (as of June 1993)

State	Responsible Agency	Certification	Lab Number
Connecticut	Department of Health Services	Drinking Water, Wastewater	PH-0497
Kansas	Department of Health and Environmental Services	Drinking Water, Wastewater/Solid, Hazardous Waste	E-210/E-1185
Massachusetts	Department of Environmental Protection	Potable/Non-Potable Water	CT023
New Hampshire	Department of Environmental Services	Drinking Water, Wastewater	252891
New Jersey	Department of Environmental Protection	Drinking Water, Wastewater	46410
New York	Department of Health	CLP, Drinking Water, Wastewater, Solid/ Hazardous Waste	10602
North Carolina	Division of Environmental Management	Wastewater	388
Rhode Island	Department of Health	Chemistry...Non-Potable Water and Wastewater	A43
California	Department of Health Services	Hazardous Waste	1778

30950-0469
EA ENGINEERING
SAMPLE SUMMARY

CLIENT ID	LAB ID	MATRIX	DATE COLLECTED	DATE RECEIVED
MW09-24S	0469001	LIQUID	04/17/95	04/18/95
MW09-24D	0469002	LIQUID	04/17/95	04/18/95
MW09-8S	0469003	LIQUID	04/17/95	04/18/95
MW09-8D	0469004	LIQUID	04/17/95	04/18/95
MW09-20R	0469005	LIQUID	04/17/95	04/18/95
MW09-7R	0469006	LIQUID	04/17/95	04/18/95
TB 041795	0469007	LIQUID		04/18/95
FB 041795	0469008	LIQUID	04/17/95	04/18/95

IEA, INC.
ANALYTICAL SUMMARY

EA ENGINEERING
NCBC
3095-0469

#SAMPLES	MATRIX	#REPS	DESCRIPTION
6	AQUEOUS	1	MISC. ICAP METALS : NA
		1	SALINITY
		1	TOTAL DISSOLVED SOLIDS
		1	TARGET COMPOUND VOLS + TICS
		1	CHLORIDE
SAMPLE IDs : MW09-7R, MW09-8S, MW09-24D, MW09-8D, : MW09-24S, MW09-20R			
1 QC-MS	AQUEOUS		FOR FOLLOWING PARAMETERS :
		1	TARGET COMPOUND VOLATILES
SAMPLE IDs : MW09-24S			
1 QC-DUP	AQUEOUS		FOR FOLLOWING PARAMETERS :
		1	TOTAL DISSOLVED SOLIDS
		1	SALINITY
		1	MISC. ICAP METALS : NA
		1	CHLORIDE
SAMPLE IDs : MW09-24S			
1 QC-MSD	AQUEOUS		FOR FOLLOWING PARAMETERS :
		1	TARGET COMPOUND VOLATILES
SAMPLE IDs : MW09-24S			
1 QC-TB	AQUEOUS		FOR FOLLOWING PARAMETERS :
		1	TARGET COMPOUND VOLS + TICS
SAMPLE IDs : TB 041795			
1 QC-FB	AQUEOUS		FOR FOLLOWING PARAMETERS :
		1	TARGET COMPOUND VOLS + TICS
SAMPLE IDs : FB 041795			
1 QC-SPK	AQUEOUS		FOR FOLLOWING PARAMETERS :
		1	MISC. ICAP METALS : NA
		1	CHLORIDE
		1	SALINITY
SAMPLE IDs : MW09-24S			

IEA
An Aquarion Company

200 Monroe Turnpike
Monroe, Connecticut 06468

Phone 203-261-4458
Fax 203-268-5346

Replaces report rec'd April 20, 1995

April 19, 1995

RECEIVED
MAY 11 1995
EA Engineering, Science, and Technology
New England Operations

Mr. Nick Lanney
EA Engineering
2 Commercial Street
Sharon, MA 02067

Dear Mr. Lanney:

Please find enclosed the analytical results of 19 samples received at our laboratory on April 8 and 11, 1995. This report contains sections addressing the following information at a minimum:

- sample summary
- analytical methodology
- state certifications
- definitions of data qualifiers and terminology
- analytical results
- chain-of-custody

IEA Report #3095-0419	Purchase Order #29600.32
Project ID: NCBC	

Copies of this analytical report and supporting data are maintained in our files for a minimum of five years unless special arrangements have been made. Unless specifically indicated, all analytical testing was performed at this laboratory location and no portion of the testing was subcontracted.

We appreciate your selection of our services and welcome any questions or suggestions you may have relative to this report. Please contact your customer service representative at (203) 261-4458 for any additional information. Thank you for utilizing our services; we hope you will consider us for your future analytical needs.

I have reviewed and approved the enclosed data for final release.

Very truly yours,

Jeffrey C. Curran
Laboratory Manager

JCC/adj

IEA
An Aquarion Company

200 Monroe Turnpike
Monroe, Connecticut 06468

Phone 203·261·4458
Fax 203·268·5346

April 27, 1995

Mr. Nick Lanney
EA Engineering
2 Commercial Street
Sharon, MA 02067

Dear Mr. Lanney:

Please find enclosed the analytical results of 10 samples received at our laboratory on April 15, 1995. This report contains sections addressing the following information at a minimum:

- sample summary
- analytical methodology
- state certifications
- definitions of data qualifiers and terminology
- analytical results
- chain-of-custody

IEA Report #3095-0460	Purchase Order #29600.32
Project ID: NCBC	

Copies of this analytical report and supporting data are maintained in our files for a minimum of five years unless special arrangements have been made. Unless specifically indicated, all analytical testing was performed at this laboratory location and no portion of the testing was subcontracted.

We appreciate your selection of our services and welcome any questions or suggestions you may have relative to this report. Please contact your customer service representative at (203) 261-4458 for any additional information. Thank you for utilizing our services; we hope you will consider us for your future analytical needs.

I have reviewed and approved the enclosed data for final release.

Very truly yours,

Jeffrey C. Curran
Laboratory Manager

JCC/adj

3095-0460
EA ENGINEERING
PROJECT SUMMARY

The samples were analyzed for the parameters listed in the Analytical Summary Table.

METHODOLOGY/DISCUSSION

Volatile Organics - Volatile organics were determined by purge and trap GC/MS using USEPA CLP Protocols, OLM01.9. The instrumentation used was a Tekmar Dynamic Headspace Concentrator interfaced with a Hewlett-Packard Model 5972A GC/MS/DS.

Due to a high target compound concentrations, sample MW09-21D was analyzed at a 1:10 dilution.

Sample FB 041495 had high levels of acetone, This has been seen in all related projects, therefore, acetone has been flagged with an "E". Toluene was also detected in the field blank at moderate levels.

Metals - ICAP metals were determined by ICP using either a JA61 simultaneous ICAP or a PE6500XR sequential ICP using the USEPA CLP ILM03.0 SOW.

No problems occurred during analysis. All appropriate protocols were employed. All data appears to be consistent.

Classical Chemistry - Classical chemistry analyses were conducted according to Methods for Chemical Analysis of Water and Wastes, USEPA 600/4-83-020 using the following methods: chloride - 325.2; and total dissolved solids - 160.1.

Salinity was calculated based upon the chloride results.

No problems were encountered.

RESULTS

The results are presented in the following Tables. Also enclosed are the data packages containing all relevant data.

TABLE VO-1.0
3095-0460
EA ENGINEERING
EPA TCL VOLATILE ORGANICS

Aqueous

All values are ug/Kg dry weight basis.

Client Sample I.D.	Method Blank	MW09-5S		Quant. Limits with no Dilution
Lab Sample I.D.	VBLKEL	0460007		
Method Blank I.D.	VBLKEL	VBLKEL		
Dilution Factor	1.25	1.00		
Chloromethane	U	U		10
Bromomethane	U	U		10
Vinyl Chloride	U	U		10
Chloroethane	U	U		10
Methylene Chloride	U	U		10
Acetone	U	160		10
Carbon Disulfide	U	U		10
1,1-Dichloroethene	U	U		10
1,1-Dichloroethane	U	U		10
1,2-Dichloroethene (total)	U	3J		10
Chloroform	U	U		10
1,2-Dichloroethane	U	U		10
2-Butanone	U	U		10
1,1,1-Trichloroethane	U	U		10
Carbon Tetrachloride	U	U		10
Bromodichloromethane	U	U		10
1,2-Dichloropropane	U	U		10
cis-1,3-Dichloropropene	U	U		10
Trichloroethene	U	U		10
Dibromochloromethane	U	U		10
1,1,2-Trichloroethane	U	U		10
Benzene	U	2J		10
trans-1,3-Dichloropropene	U	U		10
Bromoform	U	U		10
4-Methyl-2-Pentanone	U	U		10
2-Hexanone	U	U		10
Tetrachloroethene	U	U		10
1,1,2,2-Tetrachloroethane	U	U		10
Toluene	U	4J		10
Chlorobenzene	U	U		10
Ethylbenzene	U	8J		10
Styrene	U	U		10
Xylene (total)	U	11		10
Date Received		04/15/95		
Date Extracted	N/A	N/A		
Date Analyzed	04/21/95	04/22/95		

See Appendix for qualifier definitions
Note: Compound detection limit = quantitation limit x dilution factor

TABLE VO-1.1
3095-0460
EA ENGINEERING
EPA TCL VOLATILE ORGANICS

Aqueous

All values are ug/L.

Client Sample I.D.	Method Blank	MW09-6D	MW09-10S	Quant. Limits with no Dilution
Lab Sample I.D.	VBLKDW	0460001	0460003	
Method Blank I.D.	VBLKDW	VBLKDW	VBLKDW	
Dilution Factor	1.00	1.00	1.00	
Chloromethane	U	U	U	10
Bromomethane	U	U	U	10
Vinyl Chloride	U	U	U	10
Chloroethane	U	U	U	10
Methylene Chloride	U	U	2J	10
Acetone	U	33	45	10
Carbon Disulfide	U	U	U	10
1,1-Dichloroethene	U	U	U	10
1,1-Dichloroethane	U	U	U	10
1,2-Dichloroethene (total)	U	U	U	10
Chloroform	U	U	U	10
1,2-Dichloroethane	U	U	U	10
2-Butanone	U	U	U	10
1,1,1-Trichloroethane	U	U	U	10
Carbon Tetrachloride	U	U	U	10
Bromodichloromethane	U	U	U	10
1,2-Dichloropropane	U	U	U	10
cis-1,3-Dichloropropene	U	U	U	10
Trichloroethene	U	U	U	10
Dibromochloromethane	U	U	U	10
1,1,2-Trichloroethane	U	U	U	10
Benzene	U	U	U	10
trans-1,3-Dichloropropene	U	U	U	10
Bromoform	1J	U	U	10
4-Methyl-2-Pentanone	U	U	U	10
2-Hexanone	U	U	U	10
Tetrachloroethene	U	U	U	10
1,1,2,2-Tetrachloroethane	2J	U	U	10
Toluene	U	U	U	10
Chlorobenzene	U	U	U	10
Ethylbenzene	U	U	U	10
Styrene	U	U	U	10
Xylene (total)	U	U	U	10
Date Received		04/15/95	04/15/95	
Date Extracted	N/A	N/A	N/A	
Date Analyzed	04/20/95	04/20/95	04/20/95	

See Appendix for qualifier definitions
Note: Compound detection limit = quantitation limit x dilution factor

Aqueous

TABLE VO-1.2
3095-0460
EA ENGINEERING
EPA TCL VOLATILE ORGANICS

All values are ug/L.

Client Sample I.D.	MW09-10D	MW09-21S		Quant. Limits with no Dilution
Lab Sample I.D.	0460004	0460005		
Method Blank I.D.	VBLKDW	VBLKDW		
Dilution Factor	1.00	1.00		
Chloromethane	U	U		10
Bromomethane	U	U		10
Vinyl Chloride	U	U		10
Chloroethane	U	U		10
Methylene Chloride	2J	2J		10
Acetone	U	49		10
Carbon Disulfide	U	U		10
1,1-Dichloroethene	U	U		10
1,1-Dichloroethane	U	U		10
1,2-Dichloroethene (total)	U	U		10
Chloroform	U	U		10
1,2-Dichloroethane	U	34		10
2-Butanone	U	U		10
1,1,1-Trichloroethane	U	U		10
Carbon Tetrachloride	U	U		10
Bromodichloromethane	U	U		10
1,2-Dichloropropane	U	U		10
cis-1,3-Dichloropropene	U	U		10
Trichloroethene	U	U		10
Dibromochloromethane	U	U		10
1,1,2-Trichloroethane	U	U		10
Benzene	U	8J		10
trans-1,3-Dichloropropene	U	U		10
Bromoform	U	U		10
4-Methyl-2-Pentanone	U	U		10
2-Hexanone	U	U		10
Tetrachloroethene	U	U		10
1,1,2,2-Tetrachloroethane	U	U		10
Toluene	U	2J		10
Chlorobenzene	U	U		10
Ethylb nzene	U	9J		10
Styrene	U	U		10
Xylene (total)	U	15		10
Date Received	04/15/95	04/15/95		
Date Extracted	N/A	N/A		
Date Analyzed	04/20/95	04/20/95		

See Appendix for qualifier definitions
Note: Compound detection limit = quantitation limit x dilution factor

TABLE VO-1.3
3095-0460
EA ENGINEERING
EPA TCL VOLATILE ORGANICS

Aqueous

All values are ug/L.

Client Sample I.D.	Method Blank	MW09-15I		Quant. Limits with no Dilution
Lab Sample I.D.	VBLKER	0460002		
Method Blank I.D.	VBLKER	VBLKER		
Dilution Factor	1.00	1.00		
Chloromethane	U	U		10
Bromomethane	U	U		10
Vinyl Chloride	U	U		10
Chloroethane	U	U		10
Methylene Chloride	U	U		10
Acetone	13	42B		10
Carbon Disulfide	U	U		10
1,1-Dichloroethene	U	U		10
1,1-Dichloroethane	U	U		10
1,2-Dichloroethene (total)	U	U		10
Chloroform	U	U		10
1,2-Dichloroethane	U	U		10
2-Butanone	U	15		10
1,1,1-Trichloroethane	U	U		10
Carbon Tetrachloride	U	U		10
Bromodichloromethane	U	U		10
1,2-Dichloropropane	U	U		10
cis-1,3-Dichloropropene	U	U		10
Trichloroethene	U	1J		10
Dibromochloromethane	U	U		10
1,1,2-Trichloroethane	U	U		10
Benzene	U	5J		10
trans-1,3-Dichloropropene	U	U		10
Bromoform	U	U		10
4-Methyl-2-Pentanone	U	U		10
2-Hexanone	U	U		10
Tetrachloroethene	U	U		10
1,1,2,2-Tetrachloroethane	U	U		10
Toluene	U	0.6J		10
Chlorobenzene	U	U		10
Ethylbenzene	U	U		10
Styrene	U	U		10
Xylene (total)	U	U		10
Date Received		04/15/95		
Date Extracted	N/A	N/A		
Date Analyzed	04/24/95	04/24/95		

See Appendix for qualifier definitions
Note: Compound detection limit = quantitation limit x dilution factor

TABLE VO-1.4
3095-0460
EA ENGINEERING
EPA TCL VOLATILE ORGANICS

Aqueous

All values are ug/L.

Client Sample I.D.	Method Blank	MW09-21D	MW09-QADUP4	Quant. Limits with no Dilution
Lab Sample I.D.	VBLKDX	0460006	0460008	
Method Blank I.D.	VBLKDX	VBLKDX	VBLKDX	
Dilution Factor	1.00	10.0	1.00	
Chloromethane	U	U	U	10
Bromomethane	U	U	U	10
Vinyl Chloride	U	U	U	10
Chloroethane	U	U	U	10
Methylene Chloride	U	U	U	10
Acetone	16	U	30B	10
Carbon Disulfide	U	U	U	10
1,1-Dichloroethene	U	U	U	10
1,1-Dichloroethane	U	U	U	10
1,2-Dichloroethene (total)	U	210	U	10
Chloroform	U	U	U	10
1,2-Dichloroethane	U	U	U	10
2-Butanone	U	U	8J	10
1,1,1-Trichloroethane	U	U	U	10
Carbon Tetrachloride	U	U	U	10
Bromodichloromethane	U	U	U	10
1,2-Dichloropropane	U	U	U	10
cis-1,3-Dichloropropene	U	U	U	10
Trichloroethene	U	1500	0.9J	10
Dibromochloromethane	U	U	U	10
1,1,2-Trichloroethane	U	U	U	10
Benzene	U	U	5J	10
trans-1,3-Dichloropropene	U	U	U	10
Bromoform	U	U	U	10
4-Methyl-2-Pentanone	U	U	U	10
2-Hexanone	U	U	U	10
Tetrachloroethene	U	U	U	10
1,1,2,2-Tetrachloroethane	U	U	U	10
Toluene	U	310	0.6J	10
Chlorobenzene	U	U	U	10
Ethylbenzene	U	U	U	10
Styrene	U	U	U	10
Xylene (total)	U	U	U	10
Date Received		04/15/95	04/15/95	
Date Extracted	N/A	N/A	N/A	
Date Analyzed	04/20/95	04/21/95	04/21/95	

See Appendix for qualifier definitions
Note: Compound detection limit = quantitation limit x dilution factor

TABLE VO-1.5
3095-0460
EA ENGINEERING
EPA TCL VOLATILE ORGANICS

Aqueous

All values are ug/L.

Client Sample I.D.	TB 041495	FB 041495		Quant. Limits with no Dilution
Lab Sample I.D.	0460009	0460010		
Method Blank I.D.	VBLKDX	VBLKDX		
Dilution Factor	1.00	1.00		
Chloromethane	U	U		10
Bromomethane	U	U		10
Vinyl Chloride	U	U		10
Chloroethane	U	U		10
Methylene Chloride	U	U		10
Acetone	U	380EB		10
Carbon Disulfide	U	U		10
1,1-Dichloroethene	U	U		10
1,1-Dichloroethane	U	U		10
1,2-Dichloroethene (total)	U	U		10
Chloroform	U	U		10
1,2-Dichloroethane	U	U		10
2-Butanone	U	U		10
1,1,1-Trichloroethane	U	U		10
Carbon Tetrachloride	U	U		10
Bromodichloromethane	U	U		10
1,2-Dichloropropane	U	U		10
cis-1,3-Dichloropropene	U	U		10
Trichloroethene	U	3J		10
Dibromochloromethane	U	U		10
1,1,2-Trichloroethane	U	U		10
Benzene	U	U		10
trans-1,3-Dichloropropene	U	U		10
Bromoform	U	U		10
4-Methyl-2-Pentanone	U	U		10
2-Hexanone	U	U		10
Tetrachloroethene	U	U		10
1,1,2,2-Tetrachloroethane	U	2J		10
Toluene	U	72		10
Chlorobenzene	U	U		10
Ethylbenzene	U	U		10
Styrene	U	U		10
Xylene (total)	U	2J		10
Date Received	04/15/95	04/15/95		
Date Extracted	N/A	N/A		
Date Analyzed	04/20/95	04/20/95		

See Appendix for qualifier definitions
Note: Compound detection limit = quantitation limit x dilution factor

Aqueous

TABLE VOA-2.0
3095-0460
EA ENGINEERING
VOLATILE TENTATIVELY IDENTIFIED COMPOUNDS

Related Method Blank: VBLKEL

Lab Sample Id: VBLKEL Client Sample Id: Method Blank

CAS#	Compound	RT	Estimated Conc., ug/Kg
	NONE DETECTED		

Lab Sample Id: 0460007 Client Sample Id: MW09-5S

CAS#	Compound	RT	Estimated Conc., ug/Kg
91-20-3	NAPHTHALENE	23.33	69JN
79-38-9	ETHENE, CHLOROTRIFLUORO-	2.04	43JN
67-63-0	ISOPROPYL ALCOHOL	4.72	32JN
354-23-4	ETHANE, 1,2-DICHLORO-1,1,2-T	3.73	11JN
108-87-2	CYCLOHEXANE, METHYL-	10.74	10JN
359-11-5	ETHENE, TRIFLUORO-	1.96	8JN
	UNKNOWN	21.15	6J
	UNKNOWN ALKYLBENZENE	20.34	5J

See Appendix for qualifier definitions

Aqueous

TABLE VOA-2.1
3095-0460
EA ENGINEERING
VOLATILE TENTATIVELY IDENTIFIED COMPOUNDS

Related Method Blank: VBLKDW

Lab Sample Id: VBLKDW Client Sample Id: Method Blank

CAS#	Compound	RT	Estimated Conc., ug/L
	NONE DETECTED		

Lab Sample Id: 0460001 Client Sample Id: MW09-6D

CAS#	Compound	RT	Estimated Conc., ug/L
	NONE DETECTED		

Lab Sample Id: 0460003 Client Sample Id: MW09-10S

CAS#	Compound	RT	Estimated Conc., ug/L
	NONE DETECTED		

Lab Sample Id: 0460004 Client Sample Id: MW09-10D

CAS#	Compound	RT	Estimated Conc., ug/L
	NONE DETECTED		

Lab Sample Id: 0460005 Client Sample Id: MW09-21S

CAS#	Compound	RT	Estimated Conc., ug/L
	UNKNOWN C3 ALKYLBENZENE	21.44	120J
	UNKNOWN C3 ALKYLBENZENE	21.94	69J
	UNKNOWN C3 ALKYLBENZENE	21.25	51J
	UNKNOWN C4 ALKYLBENZENE	23.12	47J
	UNKNOWN C4 ALKYLBENZENE	23.56	39J
	UNKNOWN C4 ALKYLBENZENE	22.79	36J
	UNKNOWN C3 ALKYLBENZENE	22.18	29J
	UNKNOWN C4 ALKYLBENZENE	22.66	28J
	UNKNOWN C4 ALKYLBENZENE	22.57	26J
	UNKNOWN C4 ALKYLBENZENE	21.64	20J

See Appendix for qualifier definitions

Aqueous

TABLE VOA-2.2
3095-0460
EA ENGINEERING
VOLATILE TENTATIVELY IDENTIFIED COMPOUNDS

Related Method Blank: VBLKER

Lab Sample Id: VBLKER Client Sample Id: Method Blank

CAS#	Compound	RT	Estimated Conc., ug/L
	NONE DETECTED		

Lab Sample Id: 0460002 Client Sample Id: MW09-15I

CAS#	Compound	RT	Estimated Conc., ug/L
141-78-6	ETHYL ACETATE	7.62	20JN

See Appendix for qualifier definitions

Aqueous

TABLE VOA-2.3
3095-0460
EA ENGINEERING
VOLATILE TENTATIVELY IDENTIFIED COMPOUNDS

Related Method Blank: VBLKDX

Lab Sample Id: VBLKDX Client Sample Id: Method Blank

CAS#	Compound	RT	Estimated Conc., ug/L
	NONE DETECTED		

Lab Sample Id: 0460006 Client Sample Id: MW09-21D

CAS#	Compound	RT	Estimated Conc., ug/L
76-13-1	ETHANE, 1,1,2-TRICHLORO-1,2,	6.21	1000JN
79-38-9	ETHENE, CHLOROTRIFLUORO-	3.18	260JN
354-23-4	ETHANE, 1,2-DICHLORO-1,1,2-T	5.63	180JN

Lab Sample Id: 0460008 Client Sample Id: MW09-QADUP4

CAS#	Compound	RT	Estimated Conc., ug/L
141-78-6	ETHYL ACETATE	9.76	12JN
108-87-2	CYCLOHEXANE, METHYL-	13.11	10JN

Lab Sample Id: 0460009 Client Sample Id: TB 041495

CAS#	Compound	RT	Estimated Conc., ug/L
	NONE DETECTED		

Lab Sample Id: 0460010 Client Sample Id: FB 041495

CAS#	Compound	RT	Estimated Conc., ug/L
67-63-0	ISOPROPYL ALCOHOL	7.06	10000JN
	UNKNOWN	4.25	310J
108-21-4	ACETIC ACID, 1-METHYLETHYL E	11.47	160JN
64-17-5	ETHANOL	5.76	130JN
2568-89-0	PROPANE, 2,2'-[METHYLENEBIS(	15.71	94JN
	UNKNOWN	3.22	54J
	UNKNOWN	19.17	10J
124-18-5	DECANE	21.02	9JN
	UNKNOWN C3 ALKYLBENZENE	21.47	7J
	UNKNOWN BRANCHED KETONE	13.68	6J

See Appendix for qualifier definitions

TABLE AS-1.0
3095-0460
EA ENGINEERING
MISCELLANEOUS METALS

Aqueous

All values are ug/L.

Client Sample I.D.	MW09-6D	MW09-15I	MW09-10S	MW09-10D
Lab Sample I.D.	0460001	0460002	0460003	0460004
Sodium	11200	20500	141000	8240

See Appendix for qualifier definitions

Aqueous

TABLE AS-1.1
3095-0460
EA ENGINEERING
MISCELLANEOUS METALS

All values are ug/L.

Client Sample I.D.	MW09-21S	MW09-21D	MW09-5S	MW09-QADUP4
Lab Sample I.D.	0460005	0460006	0460007	0460008
Sodium	37700	43000	13600	20700

See Appendix for qualifier definitions

TABLE CC-1.0
3095-0460
EA ENGINEERING
MISCELLANEOUS

All values are mg/L.

Parameter	MW09-6D	MW09-15I	MW09-10S	MW09-10D
Chloride	16.9	21.0	82.2	9.90
Salinity	27.9	34.6	136	16.3
Total Dissolved Solids	134	750	744	166

Parameter	MW09-21S	MW09-21D	MW09-5S	MW09-QADUP4
Chloride	46.3	36.2	13.1	20.6
Salinity	76.3	59.7	21.6	33.5
Total Dissolved Solids	517	460	435	696

ORGANICS APPENDIX

U - Indicates that the compound was analyzed for but not detected.

J - Indicates that the compound was analyzed for and determined to be present in the sample. The mass spectrum of the compound meets the identification criteria of the method. The concentration listed is an estimated value, which is less than the specified minimum detection limit but is greater than zero.

B - This flag is used when the analyte is found in the blanks as well as the sample. It indicates possible sample contamination and warns the data user to use caution when applying the results of this analyte.

N - Indicates that the compound was analyzed for but not requested as an analyte. Value will not be listed on tabular result sheet.

S - Estimated due to surrogate outliers.

X - Matrix spike compound.

(1) - Cannot be separated.

(2) - Decomposes to azobenzene. Measured and calibrated as azobenzene.

A - This flag indicates that a TIC is a suspected aldol condensation product.

E - Indicates that it exceeds calibration curve range.

D - This flag identifies all compounds identified in an analysis at a secondary dilution factor.

C - Confirmed by GC/MS.

T - Compound present in TCLP blank.

P - This flag is used for a pesticide/aroclor target analyte when there is a greater than 25 percent difference for detected concentrations between the two GC columns (see Form X).

ORGANICS APPENDIX

U - Indicates that the compound was analyzed for but not detected.

J - Indicates that the compound was analyzed for and determined to be present in the sample. The mass spectrum of the compound meets the identification criteria of the method. The concentration listed is an estimated value, which is less than the specified minimum detection limit but is greater than zero.

B - This flag is used when the analyte is found in the blanks as well as the sample. It indicates possible sample contamination and warns the data user to use caution when applying the results of this analyte.

N - Indicates that the compound was analyzed for but not requested as an analyte. Value will not be listed on tabular result sheet.

S - Estimated due to surrogate outliers.

X - Matrix spike compound.

(1) - Cannot be separated.

(2) - Decomposes to azobenzene. Measured and calibrated as azobenzene.

A - This flag indicates that a TIC is a suspected aldol condensation product.

E - Indicates that it exceeds calibration curve range.

D - This flag identifies all compounds identified in an analysis at a secondary dilution factor.

C - Confirmed by GC/MS.

T - Compound present in TCLP blank.

P - This flag is used for a pesticide/aroclor target analyte when there is a greater than 25 percent difference for detected concentrations between the two GC columns (see Form X).

STATE CERTIFICATIONS

In some instances it may be necessary for environmental data to be reported to a regulatory authority with reference to a certified laboratory. For your convenience, the laboratory identification numbers for the IEA-Connecticut laboratory are provided in the following table. Many states certify laboratories for specific parameters or tests within a category (i.e. method 325.2 for wastewater). The information in the following table indicates the lab is certified in a general category of testing such as drinking water or wastewater analysis. The laboratory should be contacted directly if parameter-specific certification information is required.

IEA-Connecticut
Certification Summary (as of June 1993)

State	Responsible Agency	Certification	Lab Number
Connecticut	Department of Health Services	Drinking Water, Wastewater	PH-0497
Kansas	Department of Health and Environmental Services	Drinking Water, Wastewater/Solid, Hazardous Waste	E-210/E-1185
Massachusetts	Department of Environmental Protection	Potable/Non-Potable Water	CT023
New Hampshire	Department of Environmental Services	Drinking Water, Wastewater	252891
New Jersey	Department of Environmental Protection	Drinking Water, Wastewater	46410
New York	Department of Health	CLP, Drinking Water, Wastewater, Solid/ Hazardous Waste	10602
North Carolina	Division of Environmental Management	Wastewater	388
Rhode Island	Department of Health	Chemistry...Non-Potable Water and Wastewater	A43
California	Department of Health Services	Hazardous Waste	1778

30950-0460
EA ENGINEERING
SAMPLE SUMMARY

CLIENT ID	LAB ID	MATRIX	DATE COLLECTED	DATE RECEIVED
MW09-6D	0460001	LIQUID	04/14/95	04/15/95
MW09-15I	0460002	LIQUID	04/14/95	04/15/95
MW09-10S	0460003	LIQUID	04/14/95	04/15/95
MW09-10D	0460004	LIQUID	04/14/95	04/15/95
MW09-21S	0460005	LIQUID	04/14/95	04/15/95
MW09-21D	0460006	LIQUID	04/14/95	04/15/95
MW09-5S	0460007	LIQUID	04/14/95	04/15/95
MW09-QADUP4	0460008	LIQUID	04/14/95	04/15/95
TB 041495	0460009	LIQUID		04/15/95
FB 041495	0460010	LIQUID	04/14/95	04/15/95

IEA, INC.
ANALYTICAL SUMMARY

EA ENGINEERING
NCBC
3095-0460

#SAMPLES	MATRIX	#REPS	DESCRIPTION
8	AQUEOUS	1	TARGET COMPOUND VOLS + TICS
		1	TOTAL DISSOLVED SOLIDS
		1	CHLORIDE
		1	SALINITY
		1	MISC. ICAP METALS : NA

SAMPLE IDs : MW09-15I, MW09-6D, MW09-5S, MW09-QADUP4,
: MW09-10D, MW09-21S, MW09-21D, MW09-10S

1 QC-FB	AQUEOUS		FOR FOLLOWING PARAMETERS :
		1	TARGET COMPOUND VOLS + TICS

SAMPLE IDs : FB 041495

1 QC-TB	AQUEOUS		FOR FOLLOWING PARAMETERS :
		1	TARGET COMPOUND VOLS + TICS

SAMPLE IDs : TB 041495

IEA
An Aquarion Company

200 Monroe Turnpike
Monroe, Connecticut 06468

Phone 203·261·4458
Fax 203·268·5346

April 26, 1995

Mr. Nick Lanney
EA Engineering
2 Commercial Street
Sharon, MA 02067

RECEIVED
APR 27 1995
EA Engineering, Science, and Technology
New England Operations

Dear Mr. Lanney:

Please find enclosed the analytical results of 7 samples received at our laboratory on April 14, 1995. This report contains sections addressing the following information at a minimum:

- sample summary
- analytical methodology
- state certifications
- definitions of data qualifiers and terminology
- analytical results
- chain-of-custody

IEA Report #3095-0451	Purchase Order #29600.32
Project ID: NCBC	

Copies of this analytical report and supporting data are maintained in our files for a minimum of five years unless special arrangements have been made. Unless specifically indicated, all analytical testing was performed at this laboratory location and no portion of the testing was subcontracted.

We appreciate your selection of our services and welcome any questions or suggestions you may have relative to this report. Please contact your customer service representative at (203) 261-4458 for any additional information. Thank you for utilizing our services; we hope you will consider us for your future analytical needs.

I have reviewed and approved the enclosed data for final release.

Very truly yours,

Jeffrey C. Curran
Laboratory Manager

JCC/mt

3095-0451
EA ENGINEERING
PROJECT SUMMARY

The samples were analyzed for the parameters listed in the Analytical Summary Table.

METHODOLOGY/DISCUSSION

Volatile Organics - Volatile organics were determined by purge and trap GC/MS using USEPA CLP Protocols, OLM01.9. The instrumentation used was a Tekmar Dynamic Headspace Concentrator interfaced with a Hewlett-Packard Model 5972A GC/MS/DS.

The following samples were analyzed at dilutions due to high target compound concentrations:

Sample ID	Dilution
MW09-9D	1:20
MW09-20I	1:2,000
MW09-19I	1:2

Metals - ICAP metals were determined by ICP using either a JA61 simultaneous ICAP or a PE6500XR sequential ICP using the USEPA CLP ILM03.0 SOW.

No problems occurred during analysis. All appropriate protocols were employed. All data appears to be consistent.

Classical Chemistry - Classical chemistry analyses were conducted according to Methods for Chemical Analysis of Water and Wastes, USEPA 600/4-83-020 using the following methods: chloride - 325.2; total dissolved solids - 160.1.

Salinity for each sample was calculated based upon the chloride results.

All holding times were met. No problems were encountered.

RESULTS

The results are presented in the following Tables. Also enclosed are the data packages containing all relevant data.

Aqueous

TABLE VO-1.0
3095-0451
EA ENGINEERING
EPA TCL VOLATILE ORGANICS

All values are ug/L.

Client Sample I.D.	Method Blank	MW09-9S		Quant. Limits with no Dilution
Lab Sample I.D.	VBLKEF	0451001		
Method Blank I.D.	VBLKEF	VBLKEF		
Dilution Factor	1.00	1.00		
Chloromethane	U	U		10
Bromomethane	U	U		10
Vinyl Chloride	U	U		10
Chloroethane	U	U		10
Methylene Chloride	U	2J		10
Acetone	U	10		10
Carbon Disulfide	U	U		10
1,1-Dichloroethene	U	U		10
1,1-Dichloroethane	U	U		10
1,2-Dichloroethene (total)	U	U		10
Chloroform	U	U		10
1,2-Dichloroethane	U	U		10
2-Butanone	U	U		10
1,1,1-Trichloroethane	U	U		10
Carbon Tetrachloride	U	U		10
Bromodichloromethane	U	U		10
1,2-Dichloropropane	U	U		10
cis-1,3-Dichloropropene	U	U		10
Trichloroethene	U	U		10
Dibromochloromethane	U	U		10
1,1,2-Trichloroethane	U	U		10
Benzene	U	2J		10
trans-1,3-Dichloropropene	U	U		10
Bromoform	U	U		10
4-Methyl-2-Pentanone	U	U		10
2-Hexanone	U	U		10
Tetrachloroethene	U	U		10
1,1,2,2-Tetrachloroethane	U	U		10
Toluene	U	U		10
Chlorobenzene	U	U		10
Ethylbenzene	U	U		10
Styrene	U	U		10
Xylene (total)	U	U		10
Date Received		04/14/95		
Date Extracted	N/A	N/A		
Date Analyzed	04/17/95	04/17/95		

See Appendix for qualifier definitions
Note: Compound detection limit = quantitation limit x dilution factor

TABLE VO-1.1
3095-0451
EA ENGINEERING
EPA TCL VOLATILE ORGANICS

Aqueous

All values are ug/L.

Client Sample I.D.	Method Blank	MW09-9D		Quant. Limits with no Dilution
Lab Sample I.D.	VBLKEG	0451002		
Method Blank I.D.	VBLKEG	VBLKEG		
Dilution Factor	1.00	20.0		
Chloromethane	U	U		10
Bromomethane	U	U		10
Vinyl Chloride	U	110J		10
Chloroethane	U	U		10
Methylene Chloride	U	U		10
Acetone	15	150JB		10
Carbon Disulfide	U	U		10
1,1-Dichloroethene	U	U		10
1,1-Dichloroethane	U	U		10
1,2-Dichloroethene (total)	U	2000		10
Chloroform	U	U		10
1,2-Dichloroethane	U	U		10
2-Butanone	U	U		10
1,1,1-Trichloroethane	U	U		10
Carbon Tetrachloride	U	U		10
Bromodichloromethane	U	U		10
1,2-Dichloropropane	U	U		10
cis-1,3-Dichloropropene	U	U		10
Trichloroethene	U	80J		10
Dibromochloromethane	U	U		10
1,1,2-Trichloroethane	U	84J		10
Benzene	U	U		10
trans-1,3-Dichloropropene	U	U		10
Bromoform	U	U		10
4-Methyl-2-Pentanone	U	U		10
2-Hexanone	U	U		10
Tetrachloroethene	U	U		10
1,1,2,2-Tetrachloroethane	U	U		10
Toluene	U	U		10
Chlorobenzene	U	U		10
Ethylbenzene	U	U		10
Styrene	U	U		10
Xylene (total)	U	U		10
Date Received		04/14/95		
Date Extracted	N/A	N/A		
Date Analyzed	04/17/95	04/17/95		

See Appendix for qualifier definitions
Note: Compound detection limit = quantitation limit x dilution factor

TABLE VO-1.2 Aqueous
3095-0451
EA ENGINEERING
EPA TCL VOLATILE ORGANICS

All values are ug/L.

Client Sample I.D.	Method Blank	MW09-9S MS	MW09-18I	Quant. Limits with no Dilution
Lab Sample I.D.	VBLKEH	0451001MS	0451003	
Method Blank I.D.	VBLKEH	VBLKEH	VBLKEH	
Dilution Factor	1.00	1.00	1.00	
Chloromethane	U	U	U	10
Bromomethane	U	U	U	10
Vinyl Chloride	U	U	3J	10
Chloroethane	U	U	U	10
Methylene Chloride	U	U	U	10
Acetone	U	4J	22	10
Carbon Disulfide	U	U	U	10
1,1-Dichloroethene	U	52X	U	10
1,1-Dichloroethane	U	U	U	10
1,2-Dichloroethene (total)	U	U	5J	10
Chloroform	U	U	U	10
1,2-Dichloroethane	U	U	1J	10
2-Butanone	U	U	U	10
1,1,1-Trichloroethane	U	U	U	10
Carbon Tetrachloride	U	U	U	10
Bromodichloromethane	U	U	U	10
1,2-Dichloropropane	U	U	U	10
cis-1,3-Dichloropropene	U	U	U	10
Trichloroethene	U	45X	U	10
Dibromochloromethane	U	U	U	10
1,1,2-Trichloroethane	U	U	U	10
Benzene	U	53X	110	10
trans-1,3-Dichloropropene	U	U	U	10
Bromoform	U	U	U	10
4-Methyl-2-Pentanone	U	U	U	10
2-Hexanone	U	U	U	10
Tetrachloroethene	U	U	U	10
1,1,2,2-Tetrachloroethane	U	U	U	10
Toluene	U	51X	9J	10
Chlorobenzene	U	50X	U	10
Ethylbenzene	U	U	15	10
Styrene	U	U	U	10
Xylene (total)	U	U	28	10
Date Received		04/14/95	04/14/95	
Date Extracted	N/A	N/A	N/A	
Date Analyzed	04/18/95	04/18/95	04/18/95	

See Appendix for qualifier definitions
Note: Compound detection limit = quantitation limit x dilution factor

Aqueous

TABLE VO-1.3
3095-0451
EA ENGINEERING
EPA TCL VOLATILE ORGANICS

All values are ug/L.

Client Sample I.D.	MW09-20I	TB 041395	FB 041395	
Lab Sample I.D.	0451005	0451006	0451007	Quant. Limits with no Dilution
Method Blank I.D.	VBLKEH	VBLKEH	VBLKEH	
Dilution Factor	2000	1.00	1.00	
Chloromethane	U	U	U	10
Bromomethane	U	U	U	10
Vinyl Chloride	U	U	U	10
Chloro thane	U	U	U	10
Methylene Chloride	U	U	U	10
Acetone	U	U	17	10
Carbon Disulfide	U	U	U	10
1,1-Dichloroethene	U	U	U	10
1,1-Dichloroethane	U	U	U	10
1,2-Dichloroethene (total)	28000	U	U	10
Chloroform	U	U	U	10
1,2-Dichloroethane	U	U	U	10
2-Butanone	U	U	U	10
1,1,1-Trichloroethane	U	U	U	10
Carbon Tetrachloride	U	U	U	10
Bromodichloromethane	U	U	U	10
1,2-Dichloropropane	U	U	U	10
cis-1,3-Dichloropropene	U	U	U	10
Trichloroethene	250000	2J	1J	10
Dibromochloromethane	U	U	U	10
1,1,2-Trichloroethane	2500J	U	U	10
Benzene	U	U	U	10
trans-1,3-Dichloropropene	U	U	U	10
Bromoform	U	U	U	10
4-Methyl-2-Pentanone	U	U	U	10
2-Hexanone	U	U	U	10
Tetrachloroethene	U	U	U	10
1,1,2,2-Tetrachloroethane	100000	U	U	10
Toluene	U	U	7J	10
Chlorobenzene	U	U	U	10
Ethylbenzene	U	U	U	10
Styrene	U	U	U	10
Xylene (total)	U	U	U	10
Date Received	04/14/95	04/14/95	04/14/95	
Date Extracted	N/A	N/A	N/A	
Date Analyzed	04/18/95	04/18/95	04/18/95	

See Appendix for qualifier definitions
Note: Compound detection limit = quantitation limit x dilution factor

TABLE VO-1.4 Aqueous
3095-0451
EA ENGINEERING
EPA TCL VOLATILE ORGANICS

All values are ug/L.

Client Sample I.D.	Method Blank	MW09-9S MSD		Quant. Limits with no Dilution
Lab Sample I.D.	VBLKEI	0451001MSD		
Method Blank I.D.	VBLKEI	VBLKEI		
Dilution Factor	1.00	1.00		
Chloromethane	U	U		10
Bromomethane	U	U		10
Vinyl Chloride	U	U		10
Chloroethane	U	U		10
Methylene Chloride	U	U		10
Acetone	8J	U		10
Carbon Disulfide	U	U		10
1,1-Dichloroethene	U	48X		10
1,1-Dichloroethane	U	U		10
1,2-Dichloroethene (total)	U	U		10
Chloroform	U	U		10
1,2-Dichloroethane	U	U		10
2-Butanone	U	U		10
1,1,1-Trichloroethane	U	U		10
Carbon Tetrachloride	U	U		10
Bromodichloromethane	U	U		10
1,2-Dichloropropane	U	U		10
cis-1,3-Dichloropropene	U	U		10
Trichloroethene	U	46X		10
Dibromochloromethane	U	U		10
1,1,2-Trichloroethane	U	U		10
Benzene	U	50X		10
trans-1,3-Dichloropropene	U	U		10
Bromoform	U	U		10
4-Methyl-2-Pentanone	U	U		10
2-Hexanone	U	U		10
Tetrachloroethene	U	U		10
1,1,2,2-Tetrachloroethane	U	U		10
Toluene	U	48X		10
Chlorobenzene	U	47X		10
Ethylbenzene	U	U		10
Styrene	U	U		10
Xylene (total)	U	U		10
Date Received		04/14/95		
Date Extracted	N/A	N/A		
Date Analyzed	04/19/95	04/19/95		

See Appendix for qualifier definitions
Note: Compound detection limit = quantitation limit x dilution factor

TABLE VO-1.5 Aqueous
3095-0451
EA ENGINEERING
EPA TCL VOLATILE ORGANICS

All values are ug/L.

Client Sample I.D.	Method Blank	MW09-19I		Quant. Limits with no Dilution
Lab Sample I.D.	VBLKEJ	0451004		
Method Blank I.D.	VBLKEJ	VBLKEJ		
Dilution Factor	1.00	2.00		
Chloromethane	U	U		10
Bromomethane	U	U		10
Vinyl Chloride	U	U		10
Chloroethane	U	U		10
Methylene Chloride	U	U		10
Acetone	U	18J		10
Carbon Disulfide	U	U		10
1,1-Dichloroethene	U	U		10
1,1-Dichloroethane	U	U		10
1,2-Dichloroethene (total)	U	10J		10
Chloroform	U	U		10
1,2-Dichloroethane	U	U		10
2-Butanone	U	U		10
1,1,1-Trichloroethane	U	U		10
Carbon Tetrachloride	U	U		10
Bromodichloromethane	U	U		10
1,2-Dichloropropane	U	U		10
cis-1,3-Dichloropropene	U	U		10
Trichloroethene	U	340		10
Dibromochloromethane	U	U		10
1,1,2-Trichloroethane	U	U		10
Benzene	U	2J		10
trans-1,3-Dichloropropene	U	U		10
Bromoform	U	U		10
4-Methyl-2-Pentanone	U	U		10
2-Hexanone	U	U		10
Tetrachloroethene	U	28		10
1,1,2,2-Tetrachloroethane	U	57		10
Toluene	U	U		10
Chlorobenzene	U	U		10
Ethylbenzene	U	U		10
Styrene	U	U		10
Xylene (total)	U	U		10
Date Received		04/14/95		
Date Extracted	N/A	N/A		
Date Analyzed	04/19/95	04/19/95		

See Appendix for qualifier definitions
Note: Compound detection limit = quantitation limit x dilution factor

TABLE VOA-2.0
3095-0451
EA ENGINEERING
VOLATILE TENTATIVELY IDENTIFIED COMPOUNDS

Aqueous

Related Method Blank: VBLKEF

Lab Sample Id: VBLKEF Client Sample Id: Method Blank

CAS#	Compound	RT	Estimated Conc., ug/L
	NONE DETECTED		

Lab Sample Id: 0451001 Client Sample Id: MW09-9S

CAS#	Compound	RT	Estimated Conc., ug/L
	NONE DETECTED		

See Appendix for qualifier definitions

Aqueous

TABLE VOA-2.1
3095-0451
EA ENGINEERING
VOLATILE TENTATIVELY IDENTIFIED COMPOUNDS

Related Method Blank: VBLKEG

Lab Sample Id: VBLKEG Client Sample Id: Method Blank

CAS#	Compound	RT	Estimated Conc., ug/L
	NONE DETECTED		

Lab Sample Id: 0451002 Client Sample Id: MW09-9D

CAS#	Compound	RT	Estimated Conc., ug/L
91-20-3	NAPHTHALENE	23.33	150JN

See Appendix for qualifier definitions

TABLE VOA-2.2
3095-0451
EA ENGINEERING
VOLATILE TENTATIVELY IDENTIFIED COMPOUNDS

Aqueous

Related Method Blank: VBLKEH

Lab Sample Id: VBLKEH Client Sample Id: Method Blank

CAS#	Compound	RT	Estimated Conc., ug/L
	NONE DETECTED		

Lab Sample Id: 0451003 Client Sample Id: MW09-18I

CAS#	Compound	RT	Estimated Conc., ug/L
108-87-2	CYCLOHEXANE, METHYL-	10.76	140JN
110-82-7	CYCLOHEXANE	8.44	70JN
	UNKNOWN ALKYLBENZENE	20.90	67J
91-20-3	NAPHTHALENE	23.33	66JN
103-65-1	BENZENE, PROPYL-	19.52	61JN
496-11-7	INDANE	21.17	48JN
96-37-7	CYCLOPENTANE, METHYL-	7.20	46JN
	UNKNOWN ALKYLBENZENE	20.34	38J
	UNKNOWN ALKYLBENZENE	18.83	37J
	UNKNOWN ALKYLBENZENE	21.73	31J

Lab Sample Id: 0451005 Client Sample Id: MW09-20I

CAS#	Compound	RT	Estimated Conc., ug/L
	NONE DETECTED		

Lab Sample Id: 0451006 Client Sample Id: TB 041395

CAS#	Compound	RT	Estimated Conc., ug/L
	NONE DETECTED		

See Appendix for qualifier definitions

Aqueous

TABLE VOA-2.3
3095-0451
EA ENGINEERING
VOLATILE TENTATIVELY IDENTIFIED COMPOUNDS

Related Method Blank: VBLKEH

Lab Sample Id: 0451007 Client Sample Id: FB 041395

CAS#	Compound	RT	Estimated Conc., ug/L
67-63-0	ISOPROPYL ALCOHOL	4.70	280JN
108-21-4	ACETIC ACID, 1-METHYLETHYL E	9.29	17JN
2568-89-0	PROPANE, 2,2'-[METHYLENEBIS(	13.59	5JN

See Appendix for qualifier definitions

Aqueous

TABLE VOA-2.4
3095-0451
EA ENGINEERING
VOLATILE TENTATIVELY IDENTIFIED COMPOUNDS

Related Method Blank: VBLKEI

Lab Sample Id: VBLKEI Client Sample Id: Method Blank

CAS#	Compound	RT	Estimated Conc., ug/L
	NONE DETECTED		

See Appendix for qualifier definitions

Aqueous

TABLE VOA-2.5
3095-0451
EA ENGINEERING
VOLATILE TENTATIVELY IDENTIFIED COMPOUNDS

Related Method Blank: VBLKEJ

Lab Sample Id: VBLKEJ Client Sample Id: Method Blank

CAS#	Compound	RT	Estimated Conc., ug/L
	NONE DETECTED		

Lab Sample Id: 0451004 Client Sample Id: MW09-19I

CAS#	Compound	RT	Estimated Conc., ug/L
	NONE DETECTED		

See Appendix for qualifier definitions

TABLE AS-1.0
3095-0451
EA ENGINEERING
MISCELLANEOUS METALS

Aqueous

All values are ug/L.

Client Sample I.D.	MW09-9S	MW09-9S D	MW09-9S S	MW09-9D
Lab Sample I.D.	0451001	0451001D	0451001S	0451002
Sodium	53100	54200	NR	162000

See Appendix for qualifier definitions

Aqueous

TABLE AS-1.1
3095-0451
EA ENGINEERING
MISCELLANEOUS METALS

All values are ug/L.

Client Sample I.D.	MW09-18I	MW09-19I	MW09-20I	
Lab Sample I.D.	0451003	0451004	0451005	
Sodium	18800	63700	293000	

See Appendix for qualifier definitions

TABLE CC-1.0
3095-0451
EA ENGINEERING
MISCELLANEOUS

All values are mg/L.

Parameter	MW09-9S	MW09-9D	MW09-18I	MW09-19I	MW09-20I
Chloride	51.0	428	61.9	33.8	435
Salinity	84.1	706	102	55.7	717
Total Dissolved Solids	759	952	503	720	1,280

ORGANICS APPENDIX

U - Indicates that the compound was analyzed for but not detected.

J - Indicates that the compound was analyzed for and determined to be present in the sample. The mass spectrum of the compound meets the identification criteria of the method. The concentration listed is an estimated value, which is less than the specified minimum detection limit but is greater than zero.

B - This flag is used when the analyte is found in the blanks as well as the sample. It indicates possible sample contamination and warns the data user to use caution when applying the results of this analyte.

N - Indicates that the compound was analyzed for but not requested as an analyte. Value will not be listed on tabular result sheet.

S - Estimated due to surrogate outliers.

X - Matrix spike compound.

(1) - Cannot be separated.

(2) - Decomposes to azobenzene. Measured and calibrated as azobenzene.

A - This flag indicates that a TIC is a suspected aldol condensation product.

E - Indicates that it exceeds calibration curve range.

D - This flag identifies all compounds identified in an analysis at a secondary dilution factor.

C - Confirmed by GC/MS.

T - Compound present in TCLP blank.

P - This flag is used for a pesticide/aroclor target analyte when there is a greater than 25 percent difference for detected concentrations between the two GC columns (see Form X).

INORGANICS APPENDIX

C - Concentration qualifiers

U - Indicates analyte result less than instrument detection limit (IDL)

B - Indicates analyte result between IDL and contract required detection limit (CRDL)

Q - QC qualifiers

E - Reported value is estimated because of the presence of interference

M - Duplicate injection precision not met

N - Spiked sample recovery not within control limits

S - The reported value was determined by the method of standard additions (MSA)

W - Post-digest spike recovery furnace analysis was out of 85-115 percent control limit, while sample absorbance was less than 50 percent of spike absorbance

* - Duplicate analysis not within control limit

+ - Correlation coefficient for MSA is less than 0.995

M - Method codes

P - ICP

A - Flame AA

F - Furnace AA

CV - Cold vapor AA (manual)

C - Cyanide

NR - Not Required

NC - Not Calculated as per protocols

STATE CERTIFICATIONS

In some instances it may be necessary for environmental data to be reported to a regulatory authority with reference to a certified laboratory. For your convenience, the laboratory identification numbers for the IEA-Connecticut laboratory are provided in the following table. Many states certify laboratories for specific parameters or tests within a category (i.e. method 325.2 for wastewater). The information in the following table indicates the lab is certified in a general category of testing such as drinking water or wastewater analysis. The laboratory should be contacted directly if parameter-specific certification information is required.

IEA-Connecticut
Certification Summary (as of June 1993)

State	Responsible Agency	Certification	Lab Number
Connecticut	Department of Health Services	Drinking Water, Wastewater	PH-0497
Kansas	Department of Health and Environmental Services	Drinking Water, Wastewater/Solid, Hazardous Waste	E-210/E-1185
Massachusetts	Department of Environmental Protection	Potable/Non-Potable Water	CT023
New Hampshire	Department of Environmental Services	Drinking Water, Wastewater	252891
New Jersey	Department of Environmental Protection	Drinking Water, Wastewater	46410
New York	Department of Health	CLP, Drinking Water, Wastewater, Solid/ Hazardous Waste	10602
North Carolina	Division of Environmental Management	Wastewater	388
Rhode Island	Department of Health	Chemistry...Non-Potable Water and Wastewater	A43
California	Department of Health Services	Hazardous Waste-	1778

30950-0451
EA ENGINEERING
SAMPLE SUMMARY

CLIENT ID	LAB ID	MATRIX	DATE COLLECTED	DATE RECEIVED
MW09-9S	0451001	LIQUID	04/13/95	04/14/95
MW09-9D	0451002	LIQUID	04/13/95	04/14/95
MW09-18I	0451003	LIQUID	04/13/95	04/14/95
MW09-19I	0451004	LIQUID	04/13/95	04/14/95
MW09-20I	0451005	LIQUID	04/13/95	04/14/95
TB 041395	0451006	LIQUID		04/14/95
FB 041395	0451007	LIQUID	04/13/95	04/14/95

IEA, INC.
ANALYTICAL SUMMARY

EA ENGINEERING
NCBC
3095-0451

#SAMPLES	MATRIX	#REPS	DESCRIPTION
5	AQUEOUS	1	TARGET COMPOUND VOLS + TICS
		1	TOTAL DISSOLVED SOLIDS
		1	CHLORIDE
		1	SALINITY
		1	MISC. ICAP METALS : NA
SAMPLE IDs : MW09-18I, MW09-19I, MW09-20I, MW09-9D, : MW09-9S			
1 QC-TB	AQUEOUS		FOR FOLLOWING PARAMETERS :
		1	TARGET COMPOUND VOLS + TICS
SAMPLE IDs : TB 041395			
1 QC-MSD	AQUEOUS		FOR FOLLOWING PARAMETERS :
		1	TARGET COMPOUND VOLATILES
SAMPLE IDs : MW09-9S			
1 QC-MS	AQUEOUS		FOR FOLLOWING PARAMETERS :
		1	TARGET COMPOUND VOLATILES
SAMPLE IDs : MW09-9S			
1 QC-SPK	AQUEOUS		FOR FOLLOWING PARAMETERS :
		1	CHLORIDE
		1	SALINITY
		1	MISC. ICAP METALS : NA
SAMPLE IDs : MW09-9S			
1 QC-FB	AQUEOUS		FOR FOLLOWING PARAMETERS :
		1	TARGET COMPOUND VOLS + TICS
SAMPLE IDs : FB 041395			
1 QC-DUP	AQUEOUS		FOR FOLLOWING PARAMETERS :
		1	TOTAL DISSOLVED SOLIDS
		1	CHLORIDE
		1	SALINITY
		1	MISC. ICAP METALS : NA
SAMPLE IDs : MW09-9S			

IEA
An Aquarion Company

200 Monroe Turnpike
Monroe, Connecticut 06468

Phone 203·261·4458
Fax 203·268·5346

April 26, 1995

RECEIVED
APR 27 1995
EA Engineering, Science and Technology
NEW England Operations

Mr. Nick Lanney
EA Engineering
2 Commercial Street
Sharon, MA 02067

Dear Mr. Lanney:

Please find enclosed the analytical results of eight samples received at our laboratory on April 13, 1995. This report contains sections addressing the following information at a minimum:

- sample summary
- analytical methodology
- state certifications
- definitions of data qualifiers and terminology
- analytical results
- chain-of-custody

IEA Report #3095-0444	Purchase Order #29600.32
Project ID: NCBC	

Copies of this analytical report and supporting data are maintained in our files for a minimum of five years unless special arrangements have been made. Unless specifically indicated, all analytical testing was performed at this laboratory location and no portion of the testing was subcontracted.

We appreciate your selection of our services and welcome any questions or suggestions you may have relative to this report. Please contact your customer service representative at (203) 261-4458 for any additional information. Thank you for utilizing our services; we hope you will consider us for your future analytical needs.

I have reviewed and approved the enclosed data for final release.

Very truly yours,

Jeffrey C. Curran
Laboratory Manager

JCC/adj

3095-0444
EA ENGINEERING
PROJECT SUMMARY

The samples were analyzed for the parameters listed in the Analytical Summary Table.

METHODOLOGY/DISCUSSION

Volatile Organics - Volatile organics were determined by purge and trap GC/MS using USEPA CLP Protocols, OLM01.9. The instrumentation used was a Tekmar Dynamic Headspace Concentrator interfaced with a Hewlett-Packard Model 5972A GC/MS/DS.

Samples FB 041295 and MW09-23S had acetone at concentrations over the calibration curve range of 200 ppb. This is probably caused by field contamination since sample FB 041295 is a field blank. The client was contacted and requested the results be reported.

Metals - ICAP metals were determined by ICP using either a JA61 simultaneous ICAP or a PE6500XR sequential ICP using the USEPA CLP ILM03.0 SOW.

No problems occurred during analysis. All appropriate protocols were employed. All data appears to be consistent.

Classical Chemistry - Classical chemistry analyses were conducted according to Methods for Chemical Analysis of Water and Wastes, USEPA 600/4-83-020 using the following methods: chloride - 325.2; and total dissolved solids - 160.1.

Salinity was calculated based upon the chloride results.

No problems were encountered.

RESULTS

The results are presented in the following Tables. Also enclosed are the data packages containing all relevant data.

Aqueous

TABLE VO-1.0
3095-0444
EA ENGINEERING
EPA TCL VOLATILE ORGANICS

All values are ug/L.

Client Sample I.D.	Method Blank	MW09-23D	MW09-16S	Quant. Limits with no Dilution
Lab Sample I.D.	VBLKEF	0444002	0444003	
Method Blank I.D.	VBLKEF	VBLKEF	VBLKEF	
Dilution Factor	1.00	1.00	1.00	
Chloromethane	U	U	U	10
Bromomethane	U	U	U	10
Vinyl Chloride	U	U	U	10
Chloroethane	U	U	U	10
Methylene Chloride	U	U	U	10
Acetone	U	79	26	10
Carbon Disulfide	U	U	U	10
1,1-Dichloroethene	U	U	U	10
1,1-Dichloroethane	U	U	U	10
1,2-Dichloroethene (total)	U	U	U	10
Chloroform	U	5J	U	10
1,2-Dichloroethane	U	U	U	10
2-Butanone	U	U	U	10
1,1,1-Trichloroethane	U	U	U	10
Carbon Tetrachloride	U	U	U	10
Bromodichloromethane	U	U	U	10
1,2-Dichloropropane	U	U	U	10
cis-1,3-Dichloropropene	U	U	U	10
Trichloroethene	U	U	U	10
Dibromochloromethane	U	U	U	10
1,1,2-Trichloroethane	U	U	U	10
Benzene	U	U	4J	10
trans-1,3-Dichloropropene	U	U	U	10
Bromoform	U	U	U	10
4-Methyl-2-Pentanone	U	U	U	10
2-Hexanone	U	U	U	10
Tetrachloroethene	U	U	U	10
1,1,2,2-Tetrachloroethane	U	U	U	10
Toluene	U	U	5J	10
Chlorobenzene	U	U	U	10
Ethylbenzene	U	U	1J	10
Styrene	U	U	U	10
Xylene (total)	U	U	11	10
Date Received		04/13/95	04/13/95	
Date Extracted	N/A	N/A	N/A	
Date Analyzed	04/17/95	04/17/95	04/17/95	

See Appendix for qualifier definitions
Note: Compound detection limit = quantitation limit x dilution factor

TABLE VO-1.1
3095-0444
EA ENGINEERING
EPA TCL VOLATILE ORGANICS

Aqueous

All values are ug/L.

Client Sample I.D.	MW09-17I	MW09-20S	MW09-20D	Quant. Limits with no Dilution
Lab Sample I.D.	0444004	0444005	0444006	
Method Blank I.D.	VBLKEF	VBLKEF	VBLKEF	
Dilution Factor	1.00	1.00	1.00	
Chloromethane	U	U	U	10
Bromomethane	U	U	U	10
Vinyl Chloride	U	2J	U	10
Chloroethane	U	U	U	10
Methylene Chloride	U	U	U	10
Acetone	96	32	18	10
Carbon Disulfide	U	U	U	10
1,1-Dichloroethene	U	U	U	10
1,1-Dichloroethane	U	U	U	10
1,2-Dichloroethene (total)	U	95	2J	10
Chloroform	U	U	U	10
1,2-Dichloroethane	U	U	U	10
2-Butanone	U	U	U	10
1,1,1-Trichloroethane	U	U	U	10
Carbon Tetrachloride	U	U	U	10
Bromodichloromethane	U	U	U	10
1,2-Dichloropropane	U	U	U	10
cis-1,3-Dichloropropene	U	U	U	10
Trichloroethene	U	16	9J	10
Dibromochloromethane	U	U	U	10
1,1,2-Trichloroethane	U	1J	U	10
Benzene	8J	2J	U	10
trans-1,3-Dichloropropene	U	U	U	10
Bromoform	U	U	U	10
4-Methyl-2-Pentanone	U	U	U	10
2-Hexanone	U	U	U	10
Tetrachloroethene	U	U	U	10
1,1,2,2-Tetrachloroethane	U	U	U	10
Toluene	0.7J	0.4J	U	10
Chlorobenzene	U	U	U	10
Ethylbenzene	U	U	U	10
Styrene	U	U	U	10
Xylene (total)	U	U	U	10
Date Received	04/13/95	04/13/95	04/13/95	
Date Extracted	N/A	N/A	N/A	
Date Analyzed	04/17/95	04/17/95	04/17/95	

See Appendix for qualifier definitions
Note: Compound detection limit = quantitation limit x dilution factor

Aqueous

TABLE VO-1.2
3095-0444
EA ENGINEERING
EPA TCL VOLATILE ORGANICS

All values are ug/L.

Client Sample I.D.	FB 041295	TB 041295		Quant. Limits with no Dilution
Lab Sample I.D.	0444007	0444008		
Method Blank I.D.	VBLKEF	VBLKEF		
Dilution Factor	1.00	1.00		
Chloromethane	U	U		10
Bromomethane	U	U		10
Vinyl Chloride	U	U		10
Chloroethane	U	U		10
Methylene Chloride	U	1J		10
Acetone	840E	25		10
Carbon Disulfide	U	U		10
1,1-Dichloroethene	U	U		10
1,1-Dichloroethane	U	U		10
1,2-Dichloroethene (total)	U	U		10
Chloroform	U	U		10
1,2-Dichloroethane	U	U		10
2-Butanone	U	U		10
1,1,1-Trichloroethane	U	U		10
Carbon Tetrachloride	U	U		10
Bromodichloromethane	U	U		10
1,2-Dichloropropane	U	U		10
cis-1,3-Dichloropropene	U	U		10
Trichloroethene	U	U		10
Dibromochloromethane	U	U		10
1,1,2-Trichloroethane	U	U		10
Benzene	U	U		10
trans-1,3-Dichloropropene	U	U		10
Bromoform	U	U		10
4-Methyl-2-Pentanone	U	U		10
2-Hexanone	U	U		10
Tetrachloroethene	U	U		10
1,1,2,2-Tetrachloroethane	U	U		10
Toluene	8J	U		10
Chlorobenzene	U	U		10
Ethylbenzene	U	U		10
Styrene	U	U		10
Xylene (total)	U	U		10
Date Received	04/13/95	04/13/95		
Date Extracted	N/A	N/A		
Date Analyzed	04/17/95	04/17/95		

See Appendix for qualifier definitions
Note: Compound detection limit = quantitation limit x dilution factor

TABLE VO-1.3
3095-0444
EA ENGINEERING
EPA TCL VOLATILE ORGANICS

Aqueous

All values are ug/L.

Client Sample I.D.	Method Blank	MW09-23S		Quant. Limits with no Dilution
Lab Sample I.D.	VBLKEG	0444001		
Method Blank I.D.	VBLKEG	VBLKEG		
Dilution Factor	1.00	1.00		
Chloromethane	U	U		10
Bromomethane	U	U		10
Vinyl Chloride	U	U		10
Chloroethane	U	U		10
Methylene Chloride	U	U		10
Acetone	15	230EB		10
Carbon Disulfide	U	U		10
1,1-Dichloroethene	U	U		10
1,1-Dichloroethane	U	U		10
1,2-Dichloroethene (total)	U	U		10
Chloroform	U	U		10
1,2-Dichloroethane	U	U		10
2-Butanone	U	U		10
1,1,1-Trichloroethane	U	U		10
Carbon Tetrachloride	U	U		10
Bromodichloromethane	U	U		10
1,2-Dichloropropane	U	U		10
cis-1,3-Dichloropropene	U	U		10
Trichloroethene	U	U		10
Dibromochloromethane	U	U		10
1,1,2-Trichloroethane	U	U		10
Benzene	U	3J		10
trans-1,3-Dichloropropene	U	U		10
Bromoform	U	U		10
4-Methyl-2-Pentanone	U	U		10
2-Hexanone	U	U		10
Tetrachloroethene	U	U		10
1,1,2,2-Tetrachloroethane	U	U		10
Toluene	U	0.5J		10
Chlorobenzene	U	8J		10
Ethylbenzene	U	U		10
Styrene	U	U		10
Xylene (total)	U	U		10
Date Received		04/13/95		
Date Extracted	N/A	N/A		
Date Analyzed	04/17/95	04/17/95		

See Appendix for qualifier definitions
Note: Compound detection limit = quantitation limit x dilution factor

Aqueous

TABLE VOA-2.0
3095-0444
EA ENGINEERING
VOLATILE TENTATIVELY IDENTIFIED COMPOUNDS

Related Method Blank: VBLKEF

Lab Sample Id: VBLKEF Client Sample Id: Method Blank

CAS#	Compound	RT	Estimated Conc., ug/L
	NONE DETECTED		

Lab Sample Id: 0444002 Client Sample Id: MW09-23D

CAS#	Compound	RT	Estimated Conc., ug/L
141-78-6	ETHYL ACETATE	7.57	480JN
	UNKNOWN ALCOHOL	3.82	140J
67-63-0	ISOPROPYL ALCOHOL	4.67	10JN

Lab Sample Id: 0444003 Client Sample Id: MW09-16S

CAS#	Compound	RT	Estimated Conc., ug/L
	UNKNOWN ALKYLBENZENE	20.32	56J
91203	NAPHTHALENE	23.31	26JN
	UNKNOWN ALKYLBENZENE	20.89	22J
	UNKNOWN ALKYLBENZENE	19.79	17J
	UNKNOWN ALKYLBENZENE	19.68	13J
	UNKNOWN ALKYLBENZENE	21.29	12J
	UNKNOWN ALKYLBENZENE	21.72	11J
	UNKNOWN ALKYLBENZENE	21.63	11J
67-63-0	ISOPROPYL ALCOHOL	4.67	10JN
108-87-2	CYCLOHEXANE, METHYL-	10.72	9JN

Lab Sample Id: 0444004 Client Sample Id: MW09-17I

CAS#	Compound	RT	Estimated Conc., ug/L
108-87-2	CYCLOHEXANE, METHYL-	10.70	11JN
	UNKNOWN ALKYLBENZENE	22.67	9J
91-20-3	NAPHTHALENE	23.31	7JN
	UNKNOWN ALCOHOL	4.91	7J
110-82-7	CYCLOHEXANE	8.40	6JN

See Appendix for qualifier definitions

Aqueous

TABLE VOA-2.1
3095-0444
EA ENGINEERING
VOLATILE TENTATIVELY IDENTIFIED COMPOUNDS

Related Method Blank: VBLKEF

Lab Sample Id: 0444005 Client Sample Id: MW09-20S

CAS#	Compound	RT	Estimated Conc., ug/L
	NONE DETECTED		

Lab Sample Id: 0444006 Client Sample Id: MW09-20D

CAS#	Compound	RT	Estimated Conc., ug/L
	UNKNOWN ALCOHOL	3.80	37J
141-78-6	ETHYL ACETATE	7.57	21JN
79-20-9	ACETIC ACID, METHYL ESTER	4.91	7JN

Lab Sample Id: 0444007 Client Sample Id: FB 041295

CAS#	Compound	RT	Estimated Conc., ug/L
67-63-0	ISOPROPYL ALCOHOL	4.70	320JN
2568-89-0	PROPANE, 2,2'-[METHYLENEBIS(	13.55	7JN

Lab Sample Id: 0444008 Client Sample Id: TB 041295

CAS#	Compound	RT	Estimated Conc., ug/L
	NONE DETECTED		

See Appendix for qualifier definitions

Aqueous

TABLE VOA-2.2
3095-0444
EA ENGINEERING
VOLATILE TENTATIVELY IDENTIFIED COMPOUNDS

Related Method Blank: VBLKEG

Lab Sample Id: VBLKEG Client Sample Id: Method Blank

CAS#	Compound	RT	Estimated Conc., ug/L
	NONE DETECTED		

Lab Sample Id: 0444001 Client Sample Id: MW09-23S

CAS#	Compound	RT	Estimated Conc., ug/L
91-20-3	NAPHTHALENE	23.33	100JN
	UNKNOWN ISOMER OF METHYL NAP	24.59	25J
67-63-0	ISOPROPYL ALCOHOL	4.65	14JN
	UNKNOWN ISOMER OF METHYL NAP	24.84	13J
270-82-6	BENZO THIOPHENE ISOMER	23.45	5JN

See Appendix for qualifier definitions

TABLE AS-1.0
3095-0444
EA ENGINEERING
MISCELLANEOUS METALS

Aqueous

All values are ug/L.

Client Sample I.D.	MW09-23S	MW09-23D	MW09-16S	MW09-17I
Lab Sample I.D.	0444001	0444002	0444003	0444004
Sodium	241000	356000	25800	21800

See Appendix for qualifier definitions

Aqueous

TABLE AS-1.1
3095-0444
EA ENGINEERING
MISCELLANEOUS METALS

All values are ug/L.

Client Sample I.D.	MW09-20S	MW09-20D		
Lab Sample I.D.	0444005	0444006		
Sodium	67500	45300		

See Appendix for qualifier definitions

TABLE CC-1.0
3095-0444
EA ENGINEERING
MISCELLANEOUS

All values are mg/L.

Parameter	MW09-23S	MW09-23D	MW09-16S
Chloride	165	746	21.4
Salinity	272	1,230	35.2
Total Dissolved Solids	947	1,420	549

Parameter	MW09-17I	MW09-20S	MW09-20D
Chloride	37.8	78.7	110
Salinity	62.3	130	181
Total Dissolved Solids	544	762	386

ORGANICS APPENDIX

U - Indicates that the compound was analyzed for but not detected.

J - Indicates that the compound was analyzed for and determined to be present in the sample. The mass spectrum of the compound meets the identification criteria of the method. The concentration listed is an estimated value, which is less than the specified minimum detection limit but is greater than zero.

B - This flag is used when the analyte is found in the blanks as well as the sample. It indicates possible sample contamination and warns the data user to use caution when applying the results of this analyte.

N - Indicates that the compound was analyzed for but not requested as an analyte. Value will not be listed on tabular result sheet.

S - Estimated due to surrogate outliers.

X - Matrix spike compound.

(1) - Cannot be separated.

(2) - Decomposes to azobenzene. Measured and calibrated as azobenzene.

A - This flag indicates that a TIC is a suspected aldol condensation product.

E - Indicates that it exceeds calibration curve range.

D - This flag identifies all compounds identified in an analysis at a secondary dilution factor.

C - Confirmed by GC/MS.

T - Compound present in TCLP blank.

P - This flag is used for a pesticide/aroclor target analyte when there is a greater than 25 percent difference for detected concentrations between the two GC columns (see Form X).

INORGANICS APPENDIX

C - Concentration qualifiers

U - Indicates analyte result less than instrument detection limit (IDL)

B - Indicates analyte result between IDL and contract required detection limit (CRDL)

Q - QC qualifiers

E - Reported value is estimated because of the presence of interference

M - Duplicate injection precision not met

N - Spiked sample recovery not within control limits

S - The reported value was determined by the method of standard additions (MSA)

W - Post-digest spike recovery furnace analysis was out of 85-115 percent control limit, while sample absorbance was less than 50 percent of spike absorbance

* - Duplicate analysis not within control limit

+ - Correlation coefficient for MSA is less than 0.995

M - Method codes

P - ICP

A - Flame AA

F - Furnace AA

CV - Cold vapor AA (manual)

C - Cyanide

NR - Not Required

NC - Not Calculated as per protocols

STATE CERTIFICATIONS

In some instances it may be necessary for environmental data to be reported to a regulatory authority with reference to a certified laboratory. For your convenience, the laboratory identification numbers for the IEA-Connecticut laboratory are provided in the following table. Many states certify laboratories for specific parameters or tests within a category (i.e. method 325.2 for wastewater). The information in the following table indicates the lab is certified in a general category of testing such as drinking water or wastewater analysis. The laboratory should be contacted directly if parameter-specific certification information is required.

IEA-Connecticut
Certification Summary (as of June 1993)

State	Responsible Agency	Certification	Lab Number
Connecticut	Department of Health Services	Drinking Water, Wastewater	PH-0497
Kansas	Department of Health and Environmental Services	Drinking Water, Wastewater/Solid, Hazardous Waste	E-210/E-1185
Massachusetts	Department of Environmental Protection	Potable/Non-Potable Water	CT023
New Hampshire	Department of Environmental Services	Drinking Water, Wastewater	252891
New Jersey	Department of Environmental Protection	Drinking Water, Wastewater	46410
New York	Department of Health	CLP, Drinking Water, Wastewater, Solid/ Hazardous Waste	10602
North Carolina	Division of Environmental Management	Wastewater	388
Rhode Island	Department of Health	Chemistry...Non-Potable Water and Wastewater	A43
California	Department of Health Services	Hazardous Waste-	1778

30950-0444
EA ENGINEERING
SAMPLE SUMMARY

CLIENT ID	LAB ID	MATRIX	DATE COLLECTED	DATE RECEIVED
MW09-23S	0444001	LIQUID	04/12/95	04/13/95
MW09-23D	0444002	LIQUID	04/12/95	04/13/95
MW09-16S	0444003	LIQUID	04/12/95	04/13/95
MW09-17I	0444004	LIQUID	04/12/95	04/13/95
MW09-20S	0444005	LIQUID	04/12/95	04/13/95
MW09-20D	0444006	LIQUID	04/12/95	04/13/95
FB 041295	0444007	LIQUID	04/12/95	04/13/95
TB 041295	0444008	LIQUID		04/13/95

IEA, INC.
ANALYTICAL SUMMARY

EA ENGINEERING
NCBC
3095-0444

#SAMPLES	MATRIX	#REPS	DESCRIPTION
6	AQUEOUS	1	TARGET COMPOUND VOLS + TICS
		1	TOTAL DISSOLVED SOLIDS
		1	CHLORIDE
		1	SALINITY
		1	MISC. ICAP METALS : NA

SAMPLE IDs : MW09-23S, MW09-23D, MW09-16S, MW09-17I,
: MW09-20S, MW09-20D

1 QC-FB	AQUEOUS		FOR FOLLOWING PARAMETERS :
		1	TARGET COMPOUND VOLS + TICS

SAMPLE IDs : FB 041295

1 QC-TB	AQUEOUS		FOR FOLLOWING PARAMETERS :
		1	TARGET COMPOUND VOLS + TICS

SAMPLE IDs : TB 041295

IEA
An Aquarion Company

200 Monroe Turnpike
Monroe, Connecticut 06468

Phone 203·261·4458
Fax 203·268·5346

April 26, 1995

Mr. Nick Lanney
EA Engineering
2 Commercial Street
Sharon, MA 02067

RECEIVED
APR 27 1995
EA Engineering, Science, and Technology
New England Operations

Dear Mr. Lanney:

Please find enclosed the analytical results of 9 samples received at our laboratory on April 12, 1995. This report contains sections addressing the following information at a minimum:

- sample summary
- analytical methodology
- state certifications
- definitions of data qualifiers and terminology
- analytical results
- chain-of-custody

IEA Report #3095-0434	Purchase Order #29600.32.3241
Project ID: NCBC	

Copies of this analytical report and supporting data are maintained in our files for a minimum of five years unless special arrangements have been made. Unless specifically indicated, all analytical testing was performed at this laboratory location and no portion of the testing was subcontracted.

We appreciate your selection of our services and welcome any questions or suggestions you may have relative to this report. Please contact your customer service representative at (203) 261-4458 for any additional information. Thank you for utilizing our services; we hope you will consider us for your future analytical needs.

I have reviewed and approved the enclosed data for final release.

Very truly yours,

Jeffrey C. Curran
Laboratory Manager

JCC/mt

3095-0434
EA ENGINEERING
PROJECT SUMMARY

The samples were analyzed for the parameters listed in the Analytical Summary Table.

METHODOLOGY/DISCUSSION

Volatile Organics - Volatile organics were determined by purge and trap GC/MS using USEPA CLP Protocols, OLM01.9. The instrumentation used was a Tekmar Dynamic Headspace Concentrator interfaced with a Hewlett-Packard Model 5995/5972A GC/MS/DS.

No problems were encountered.

Metals - ICAP metals were determined by ICP using either a JA61 simultaneous ICAP or a PE6500XR sequential ICP using the USEPA CLP ILM03.0 SOW.

No problems occurred during analysis. All appropriate protocols were employed. All data appears to be consistent.

Classical Chemistry - Classical chemistry analyses were conducted according to Methods for Chemical Analysis of Water and Wastes, USEPA 600/4-83-020 using the following methods: chloride - 325.2; total dissolved solids - 160.1.

Salinity for each sample was calculated based upon the chloride results.

All holding times were met. No problems were encountered.

RESULTS

The results are presented in the following Tables. Also enclosed are the data packages containing all relevant data.

Aqueous

TABLE VO-1.0
3095-0434
EA ENGINEERING
EPA TCL VOLATILE ORGANICS

All values are ug/L.

Client Sample I.D.	Method Blank	TB 041195		Quant. Limits with no Dilution
Lab Sample I.D.	VBLKGI	0434009		
Method Blank I.D.	VBLKGI	VBLKGI		
Dilution Factor	1.00	1.00		
Chloromethane	U	U		10
Bromomethane	U	U		10
Vinyl Chloride	U	U		10
Chloroethane	U	U		10
Methylene Chloride	U	2J		10
Acetone	U	U		10
Carbon Disulfide	U	U		10
1,1-Dichloroethene	U	U		10
1,1-Dichloroethane	U	U		10
1,2-Dichloroethene (total)	U	U		10
Chloroform	U	U		10
1,2-Dichloroethane	U	U		10
2-Butanone	4J	U		10
1,1,1-Trichloroethane	U	U		10
Carbon Tetrachloride	U	U		10
Bromodichloromethane	U	U		10
1,2-Dichloropropane	U	U		10
cis-1,3-Dichloropropene	U	U		10
Trichloroethene	U	U		10
Dibromochloromethane	U	U		10
1,1,2-Trichloroethane	U	U		10
Benzene	U	U		10
trans-1,3-Dichloropropene	U	U		10
Bromoform	U	U		10
4-Methyl-2-Pentanone	U	U		10
2-Hexanone	U	U		10
Tetrachloroethene	U	U		10
1,1,2,2-Tetrachloroethane	U	U		10
Toluene	U	U		10
Chlorobenzene	U	U		10
Ethylbenzene	U	U		10
Styrene	U	U		10
Xylene (total)	U	U		10
Date Received		04/12/95		
Date Extracted	N/A	N/A		
Date Analyzed	04/14/95	04/14/95		

See Appendix for qualifier definitions
Note: Compound detection limit = quantitation limit x dilution factor

TABLE VO-1.1
3095-0434
EA ENGINEERING
EPA TCL VOLATILE ORGANICS

Aqueous

All values are ug/L.

Client Sample I.D. Lab Sample I.D. Method Blank I.D. Dilution Factor	Method Blank VBLKED VBLKED 1.00	MW09-14I 0434001 VBLKED 1.00	MW09-14I MS 0434001MS VBLKED 1.00	Quant. Limits with no Dilution
Chloromethane	U	U	U	10
Bromomethane	U	U	U	10
Vinyl Chloride	U	84	83	10
Chloroethane	U	U	U	10
Methylene Chloride	U	U	U	10
Acetone	U	23	59	10
Carbon Disulfide	U	U	U	10
1,1-Dichloroethene	U	U	40X	10
1,1-Dichloroethane	U	U	U	10
1,2-Dichloroethene (total)	U	25	24	10
Chloroform	U	U	U	10
1,2-Dichloroethane	U	U	U	10
2-Butanone	U	U	U	10
1,1,1-Trichloroethane	U	U	U	10
Carbon Tetrachloride	U	U	U	10
Bromodichloromethane	U	U	U	10
1,2-Dichloropropane	U	U	U	10
cis-1,3-Dichloropropene	U	U	U	10
Trichloroethene	U	0.9J	40X	10
Dibromochloromethane	U	U	U	10
1,1,2-Trichloroethane	U	U	U	10
Benzene	U	27	68X	10
trans-1,3-Dichloropropene	U	U	U	10
Bromoform	U	U	U	10
4-Methyl-2-Pentanone	U	5J	4J	10
2-Hexanone	U	U	U	10
Tetrachloroethene	U	U	U	10
1,1,2,2-Tetrachloroethane	U	U	U	10
Toluene	U	100	140X	10
Chlorobenzene	U	U	42X	10
Ethylbenzene	U	12	12	10
Styrene	U	U	U	10
Xylene (total)	U	22	22	10
Date Received Date Extracted Date Analyzed	 N/A 04/15/95	04/12/95 N/A 04/15/95	04/12/95 N/A 04/15/95	

See Appendix for qualifier definitions
Note: Compound detection limit = quantitation limit x dilution factor

Aqueous

TABLE VO-1.2
3095-0434
EA ENGINEERING
EPA TCL VOLATILE ORGANICS

All values are ug/L.

Client Sample I.D.	MW09-14I MSD	MW09-7D	MW09-7I	Quant. Limits with no Dilution
Lab Sample I.D.	0434001MSD	0434003	0434004	
Method Blank I.D.	VBLKED	VBLKED	VBLKED	
Dilution Factor	1.00	200.	2.00	
Chloromethane	U	U	U	10
Bromomethane	U	U	U	10
Vinyl Chloride	96	20000	63	10
Chloroethane	U	U	U	10
Methylene Chloride	U	830J	6J	10
Acetone	33	3700	64	10
Carbon Disulfide	U	U	U	10
1,1-Dichloroethene	48X	U	U	10
1,1-Dichloroethane	U	U	U	10
1,2-Dichloroethene (total)	30	21000	42	10
Chloroform	U	U	U	10
1,2-Dichloroethane	U	160J	U	10
2-Butanone	U	2700	U	10
1,1,1-Trichloroethane	U	U	U	10
Carbon Tetrachloride	U	U	U	10
Bromodichloromethane	U	U	U	10
1,2-Dichloropropane	U	U	U	10
cis-1,3-Dichloropropene	U	U	U	10
Trichloroethene	41X	U	5J	10
Dibromochloromethane	U	U	U	10
1,1,2-Trichloroethane	U	U	U	10
Benzene	69X	170J	50	10
trans-1,3-Dichloropropene	U	U	U	10
Bromoform	U	U	U	10
4-Methyl-2-Pentanone	4J	960J	U	10
2-Hexanone	U	U	U	10
Tetrachloroethene	U	U	U	10
1,1,2,2-Tetrachloroethane	U	U	U	10
Toluene	160X	240J	300	10
Chlorobenzene	43X	U	U	10
Ethylbenzene	12	U	15J	10
Styrene	U	U	U	10
Xylene (total)	25	U	48	10
Date Received	04/12/95	04/12/95	04/12/95	
Date Extracted	N/A	N/A	N/A	
Date Analyzed	04/15/95	04/15/95	04/15/95	

See Appendix for qualifier definitions
Note: Compound detection limit = quantitation limit x dilution factor

Aqueous

TABLE VO-1.3
3095-0434
EA ENGINEERING
EPA TCL VOLATILE ORGANICS

All values are ug/L.

Client Sample I.D.	MW09-7S	MW09-QADUP3	FB 041195	Quant. Limits with no Dilution
Lab Sample I.D.	0434005	0434007	0434008	
Method Blank I.D.	VBLKED	VBLKED	VBLKED	
Dilution Factor	1.00	2.00	1.00	
Chloromethane	U	U	U	10
Bromomethane	U	U	U	10
Vinyl Chloride	U	95	U	10
Chloroethane	U	U	U	10
Methylene Chloride	U	9J	U	10
Acetone	45	82	13	10
Carbon Disulfide	U	U	U	10
1,1-Dichloroethene	U	U	U	10
1,1-Dichloroethane	U	U	U	10
1,2-Dichloroethene (total)	U	82	U	10
Chloroform	U	U	U	10
1,2-Dichloroethane	U	U	U	10
2-Butanone	U	U	U	10
1,1,1-Trichloroethane	U	U	U	10
Carbon Tetrachloride	U	U	U	10
Bromodichloromethane	U	U	U	10
1,2-Dichloropropane	U	U	U	10
cis-1,3-Dichloropropene	U	U	U	10
Trichloroethene	U	17J	U	10
Dibromochloromethane	U	U	U	10
1,1,2-Trichloroethane	U	U	U	10
Benzene	14	60	U	10
trans-1,3-Dichloropropene	U	U	U	10
Bromoform	U	U	U	10
4-Methyl-2-Pentanone	U	U	U	10
2-Hexanone	U	U	U	10
Tetrachloroethene	U	U	U	10
1,1,2,2-Tetrachloroethane	U	U	U	10
Toluene	0.8J	340	1J	10
Chlorobenzene	U	U	U	10
Ethylbenzene	U	17J	U	10
Styrene	U	U	U	10
Xylene (total)	3J	56	U	10
Date Received	04/12/95	04/12/95	04/12/95	
Date Extracted	N/A	N/A	N/A	
Date Analyzed	04/15/95	04/15/95	04/15/95	

See Appendix for qualifier definitions
Note: Compound detection limit = quantitation limit x dilution factor

Aqueous

TABLE VO-1.4
3095-0434
EA ENGINEERING
EPA TCL VOLATILE ORGANICS

All values are ug/L.

Client Sample I.D.	Method Blank	MW09-17D		Quant. Limits with no Dilution
Lab Sample I.D.	VBLKEF	0434006		
Method Blank I.D.	VBLKEF	VBLKEF		
Dilution Factor	1.00	1.00		
Chloromethane	U	U		10
Bromomethane	U	U		10
Vinyl Chloride	U	U		10
Chloroethane	U	U		10
Methylene Chloride	U	U		10
Acetone	U	19		10
Carbon Disulfide	U	U		10
1,1-Dichloroethene	U	U		10
1,1-Dichloroethane	U	U		10
1,2-Dichloroethene (total)	U	U		10
Chloroform	U	2J		10
1,2-Dichloroethane	U	U		10
2-Butanone	U	U		10
1,1,1-Trichloroethane	U	U		10
Carbon Tetrachloride	U	U		10
Bromodichloromethane	U	U		10
1,2-Dichloropropane	U	U		10
cis-1,3-Dichloropropene	U	U		10
Trichloroethene	U	U		10
Dibromochloromethane	U	U		10
1,1,2-Trichloroethane	U	U		10
Benzene	U	U		10
trans-1,3-Dichloropropene	U	U		10
Bromoform	U	U		10
4-Methyl-2-Pentanone	U	U		10
2-Hexanone	U	U		10
Tetrachloroethene	U	U		10
1,1,2,2-Tetrachloroethane	U	U		10
Toluene	U	U		10
Chlorobenzene	U	U		10
Ethylbenzene	U	U		10
Styrene	U	U		10
Xylene (total)	U	U		10
Date Received		04/12/95		
Date Extracted	N/A	N/A		
Date Analyzed	04/17/95	04/17/95		

See Appendix for qualifier definitions
Note: Compound detection limit = quantitation limit x dilution factor

Aqueous

TABLE VO-1.5
3095-0434
EA ENGINEERING
EPA TCL VOLATILE ORGANICS

All values are ug/L.

Client Sample I.D.	Method Blank	MW09-14D		Quant. Limits with no Dilution
Lab Sample I.D.	VBLKEI	0434002		
Method Blank I.D.	VBLKEI	VBLKEI		
Dilution Factor	1.00	10.0		
Chloromethane	U	U		10
Bromomethane	U	U		10
Vinyl Chloride	U	2000		10
Chloroethane	U	U		10
Methylene Chloride	U	U		10
Acetone	8J	450B		10
Carbon Disulfide	U	U		10
1,1-Dichloroethene	U	U		10
1,1-Dichloroethane	U	U		10
1,2-Dichloroethene (total)	U	820		10
Chloroform	U	U		10
1,2-Dichloroethane	U	14J		10
2-Butanone	U	280		10
1,1,1-Trichloroethane	U	U		10
Carbon Tetrachloride	U	U		10
Bromodichloromethane	U	U		10
1,2-Dichloropropane	U	17J		10
cis-1,3-Dichloropropene	U	U		10
Trichloroethene	U	U		10
Dibromochloromethane	U	U		10
1,1,2-Trichloroethane	U	U		10
Benzene	U	14J		10
trans-1,3-Dichloropropene	U	U		10
Bromoform	U	U		10
4-Methyl-2-Pentanone	U	39J		10
2-Hexanone	U	U		10
Tetrachloroethene	U	U		10
1,1,2,2-Tetrachloroethane	U	U		10
Toluene	U	8J		10
Chlorobenzene	U	U		10
Ethylbenzene	U	U		10
Styrene	U	U		10
Xylene (total)	U	U		10
Date Received		04/12/95		
Date Extracted	N/A	N/A		
Date Analyzed	04/19/95	04/19/95		

See Appendix for qualifier definitions
Note: Compound detection limit = quantitation limit x dilution factor

TABLE VOA-2.0
3095-0434
EA ENGINEERING
VOLATILE TENTATIVELY IDENTIFIED COMPOUNDS

Aqueous

Related Method Blank: VBLKGI

Lab Sample Id: VBLKGI Client Sample Id: Method Blank

CAS#	Compound	RT	Estimated Conc., ug/L
	NONE DETECTED		

Lab Sample Id: 0434009 Client Sample Id: TB 041195

CAS#	Compound	RT	Estimated Conc., ug/L
	NONE DETECTED		

See Appendix for qualifier definitions

Aqueous

TABLE VOA-2.1
3095-0434
EA ENGINEERING
VOLATILE TENTATIVELY IDENTIFIED COMPOUNDS

Related Method Blank: VBLKED

Lab Sample Id: VBLKED Client Sample Id: Method Blank

CAS#	Compound	RT	Estimated Conc., ug/L
	NONE DETECTED		

Lab Sample Id: 0434001 Client Sample Id: MW09-14I

CAS#	Compound	RT	Estimated Conc., ug/L
110-82-7	CYCLOHEXANE	8.45	16JN
	UNKNOWN	2.10	15J
	UNKNOWN ALCOHOL	22.71	15J
108-87-2	CYCLOHEXANE, METHYL-	10.76	14JN
	UNKNOWN BRANCHED CYCLOALKANE	19.93	11J
464-49-3	BICYCLO[2.2.1]HEPTAN-2-ONE,	22.94	10JN
1195-79-5	BICYCLO[2.2.1]HEPTAN-2-ONE,	22.11	8JN
	UNKNOWN CYCLOALKANE	7.20	7J

Lab Sample Id: 0434003 Client Sample Id: MW09-7D

CAS#	Compound	RT	Estimated Conc., ug/L
	NONE DETECTED		

Lab Sample Id: 0434004 Client Sample Id: MW09-7I

CAS#	Compound	RT	Estimated Conc., ug/L
	UNKNOWN	2.12	24J
110-82-7	CYCLOHEXANE	8.46	23JN
108-87-2	CYCLOHEXANE, METHYL-	10.76	16JN
1195-79-5	BICYCLO[2.2.1]HEPTAN-2-ONE,	22.11	13JN
464-49-3	BICYCLO[2.2.1]HEPTAN-2-ONE,	22.94	13JN
498-81-7	CYCLOHEXANEMETHANOL, .ALPHA.	22.71	11JN

See Appendix for qualifier definitions

TABLE VOA-2.2
3095-0434
EA ENGINEERING
VOLATILE TENTATIVELY IDENTIFIED COMPOUNDS

Aqueous

Related Method Blank: VBLKED

Lab Sample Id: 0434005 Client Sample Id: MW09-7S

CAS#	Compound	RT	Estimated Conc., ug/L
108-87-2	CYCLOHEXANE, METHYL-	10.77	54JN
110-82-7	CYCLOHEXANE	8.45	24JN
	UNKNOWN ISOMER OF METHYL NAP	24.60	22J
67-63-0	ISOPROPYL ALCOHOL	4.70	19JN
	UNKNOWN ALKYLBENZENE	22.69	19J
	UNKNOWN ALKYLBENZENE	21.75	15J
	UNKNOWN ISOMER OF METHYL NAP	24.85	14J
496-11-7	INDANE	21.17	13JN
75-45-6	METHANE, CHLORODIFLUORO-	2.10	13JN
96-37-7	CYCLOPENTANE, METHYL-	7.20	12JN

Lab Sample Id: 0434007 Client Sample Id: MW09-QADUP3

CAS#	Compound	RT	Estimated Conc., ug/L
	UNKNOWN	2.10	32J
110-82-7	CYCLOHEXANE	8.44	29JN
108-87-2	CYCLOHEXANE, METHYL-	10.76	19JN
1195-79-5	BICYCLO[2.2.1]HEPTAN-2-ONE,	22.11	15JN
464-49-3	BICYCLO[2.2.1]HEPTAN-2-ONE,	22.94	14JN
	UNKNOWN CYCLOALKANE	7.20	12J
	UNKNOWN ALKANE	3.13	11J

Lab Sample Id: 0434008 Client Sample Id: FB 041195

CAS#	Compound	RT	Estimated Conc., ug/L
67-63-0	ISOPROPYL ALCOHOL	4.67	46JN

See Appendix for qualifier definitions

Aqueous

TABLE VOA-2.3
3095-0434
EA ENGINEERING
VOLATILE TENTATIVELY IDENTIFIED COMPOUNDS

Related Method Blank: VBLKEF

Lab Sample Id: VBLKEF Client Sample Id: Method Blank

CAS#	Compound	RT	Estimated Conc., ug/L
	NONE DETECTED		

Lab Sample Id: 0434006 Client Sample Id: MW09-17D

CAS#	Compound	RT	Estimated Conc., ug/L
141-78-6	ETHYL ACETATE	7.57	100JN
	UNKNOWN ALCOHOL	3.76	28J

See Appendix for qualifier definitions

TABLE VOA-2.4 Aqueous
3095-0434
EA ENGINEERING
VOLATILE TENTATIVELY IDENTIFIED COMPOUNDS

Related Method Blank: VBLKEI

Lab Sample Id: VBLKEI Client Sample Id: Method Blank

CAS#	Compound	RT	Estimated Conc., ug/L
	NONE DETECTED		

Lab Sample Id: 0434002 Client Sample Id: MW09-14D

CAS#	Compound	RT	Estimated Conc., ug/L
	NONE DETECTED		

See Appendix for qualifier definitions

TABLE AS-1.0
3095-0434
EA ENGINEERING
MISCELLANEOUS METALS

Aqueous

All values are ug/L.

Client Sample I.D.	MW09-14I	MW09-14I D	MW09-14I S	MW09-14D
Lab Sample I.D.	0434001	0434001D	0434001S	0434002
Sodium	52400	52600	NR	81400

See Appendix for qualifier definitions

Aqueous

TABLE AS-1.1
3095-0434
EA ENGINEERING
MISCELLANEOUS METALS

All values are ug/L.

Client Sample I.D.	MW09-7D	MW09-7I	MW09-7S	MW09-17D
Lab Sample I.D.	0434003	0434004	0434005	0434006
Sodium	210000	58600	24200	94000

See Appendix for qualifier definitions

TABLE AS-1.2
3095-0434
EA ENGINEERING
MISCELLANEOUS METALS

Aqueous

All values are ug/L.

Client Sample I.D.	MW09-QADUP3			
Lab Sample I.D.	0434007			
Sodium	58400			

See Appendix for qualifier definitions

TABLE CC-1.0
3095-0434
EA ENGINEERING
MISCELLANEOUS

All values are mg/L.

Parameter	MW09-14I	MW09-14D	MW09-7D	MW09-7I
Chloride	79.4	383	595	106
Salinity	131	631	981	175
Total Dissolved Solids	451	690	1,300	526

Parameter	MW09-7S	MW09-17D	MW09-QADUP3
Chloride	51.2	177	105
Salinity	84.4	292	173
Total Dissolved Solids	479	511	545

ORGANICS APPENDIX

U - Indicates that the compound was analyzed for but not detected.

J - Indicates that the compound was analyzed for and determined to be present in the sample. The mass spectrum of the compound meets the identification criteria of the method. The concentration listed is an estimated value, which is less than the specified minimum detection limit but is greater than zero.

B - This flag is used when the analyte is found in the blanks as well as the sample. It indicates possible sample contamination and warns the data user to use caution when applying the results of this analyte.

N - Indicates that the compound was analyzed for but not requested as an analyte. Value will not be listed on tabular result sheet.

S - Estimated due to surrogate outliers.

X - Matrix spike compound.

(1) - Cannot be separated.

(2) - Decomposes to azobenzene. Measured and calibrated as azobenzene.

A - This flag indicates that a TIC is a suspected aldol condensation product.

E - Indicates that it exceeds calibration curve range.

D - This flag identifies all compounds identified in an analysis at a secondary dilution factor.

C - Confirmed by GC/MS.

T - Compound present in TCLP blank.

P - This flag is used for a pesticide/aroclor target analyte when there is a greater than 25 percent difference for detected concentrations between the two GC columns (see Form X).

INORGANICS APPENDIX

C - Concentration qualifiers

U - Indicates analyte result less than instrument detection limit (IDL)

B - Indicates analyte result between IDL and contract required detection limit (CRDL)

Q - QC qualifiers

E - Reported value is estimated because of the presence of interference

M - Duplicate injection precision not met

N - Spiked sample recovery not within control limits

S - The reported value was determined by the method of standard additions (MSA)

W - Post-digest spike recovery furnace analysis was out of 85-115 percent control limit, while sample absorbance was less than 50 percent of spike absorbance

* - Duplicate analysis not within control limit

+ - Correlation coefficient for MSA is less than 0.995

M - Method codes

P - ICP

A - Flame AA

F - Furnace AA

CV - Cold vapor AA (manual)

C - Cyanide

NR - Not Required

NC - Not Calculated as per protocols

STATE CERTIFICATIONS

In some instances it may be necessary for environmental data to be reported to a regulatory authority with reference to a certified laboratory. For your convenience, the laboratory identification numbers for the IEA-Connecticut laboratory are provided in the following table. Many states certify laboratories for specific parameters or tests within a category (i.e. method 325.2 for wastewater). The information in the following table indicates the lab is certified in a general category of testing such as drinking water or wastewater analysis. The laboratory should be contacted directly if parameter-specific certification information is required.

IEA-Connecticut
Certification Summary (as of June 1993)

State	Responsible Agency	Certification	Lab Number
Connecticut	Department of Health Services	Drinking Water, Wastewater	PH-0497
Kansas	Department of Health and Environmental Services	Drinking Water, Wastewater/Solid, Hazardous Waste	E-210/E-1185
Massachusetts	Department of Environmental Protection	Potable/Non-Potable Water	CT023
New Hampshire	Department of Environmental Services	Drinking Water, Wastewater	252891
New Jersey	Department of Environmental Protection	Drinking Water, Wastewater	46410
New York	Department of Health	CLP, Drinking Water, Wastewater, Solid/ Hazardous Waste	10602
North Carolina	Division of Environmental Management	Wastewater	388
Rhode Island	Department of Health	Chemistry...Non-Potable Water and Wastewater	A43
California	Department of Health Services	Hazardous Waste-	1778

30950-0434
EA ENGINEERING
SAMPLE SUMMARY

CLIENT ID	LAB ID	MATRIX	DATE COLLECTED	DATE RECEIVED
MW09-14I	0434001	LIQUID	04/11/95	04/12/95
MW09-14D	0434002	LIQUID	04/11/95	04/12/95
MW09-7D	0434003	LIQUID	04/11/95	04/12/95
MW09-7I	0434004	LIQUID	04/11/95	04/12/95
MW09-7S	0434005	LIQUID	04/11/95	04/12/95
MW09-17D	0434006	LIQUID	04/11/95	04/12/95
MW09-QADUP3	0434007	LIQUID	04/11/95	04/12/95
FB 041195	0434008	LIQUID	04/11/95	04/12/95
TB 041195	0434009	LIQUID		04/12/95

IEA, INC.
ANALYTICAL SUMMARY

EA ENGINEERING
NCBC
3095-0434

#SAMPLES	MATRIX	#REPS	DESCRIPTION
7	AQUEOUS	1	TARGET COMPOUND VOLS + TICS
		1	TOTAL DISSOLVED SOLIDS
		1	CHLORIDE
		1	SALINITY
		1	MISC. ICAP METALS : NA

SAMPLE IDs : MW09-14I, MW09-14D, MW09-7D, MW09-17D,
: MW09-7S, MW09-QADUP3, MW09-7I

1 QC-FB	AQUEOUS		FOR FOLLOWING PARAMETERS :
		1	TARGET COMPOUND VOLS + TICS

SAMPLE IDs : FB 041195

1 QC-SPK	AQUEOUS		FOR FOLLOWING PARAMETERS :
		1	CHLORIDE
		1	SALINITY
		1	MISC. ICAP METALS : NA

SAMPLE IDs : MW09-14I

1 QC-MS	AQUEOUS		FOR FOLLOWING PARAMETERS :
		1	TARGET COMPOUND VOLATILES

SAMPLE IDs : MW09-14I

1 QC-DUP	AQUEOUS		FOR FOLLOWING PARAMETERS :
		1	TOTAL DISSOLVED SOLIDS
		1	CHLORIDE
		1	SALINITY
		1	MISC. ICAP METALS : NA

SAMPLE IDs : MW09-14I

1 QC-MSD	AQUEOUS		FOR FOLLOWING PARAMETERS :
		1	TARGET COMPOUND VOLATILES

SAMPLE IDs : MW09-14I

1 QC-TB	AQUEOUS		FOR FOLLOWING PARAMETERS :
		1	TARGET COMPOUND VOLS + TICS

SAMPLE IDs : TB 041195

APPENDIX M

PHASE III RI GROUND-WATER TRANSPORT MODEL DATA

(TO BE PROVIDED)

APPENDIX N

TOXICITY PROFILES FOR CHEMICALS OF INTEREST

APPENDIX N

TOXICITY PROFILES FOR CHEMICALS OF INTEREST

N.1 ACENAPHTHENE

Acenaphthene ($C_{12}H_{10}$, MW 154.2, CAS registry number 83-32-9) belongs to the group of chemicals called polynuclear aromatic hydrocarbons. In its pure form, acenaphthene takes the form of solid, white needles recrystallized from alcohol. Acenaphthene is insoluble in water, but soluble in alcohols and other organic solvents such as benzene and toluene. Acenaphthene is formed during the incomplete burning of coal, oil, and gas, or other organic substances.

N.1.1 Cancer

No studies have been found on the carcinogenesis of acenaphthene in humans or animals.

N.1.2 Mutagenicity

Acenaphthene was not mutagenic in *S. typhimurium* tester strains TA1537 and TA1538 using a pour-plate technique at concentrations of 0, 10, 100, or 250 μg/mL (Gatehouse 1980). The 1,2-ring fused acenaphthenes evaluated in the same study caused frameshift mutations in DNA.

N.1.3 Toxicity

N.1.3.1 Epidemiologic Data in Humans

No studies have been located regarding the exposure and toxicity of acenaphthene to humans.

N.1.3.2 Experimental Studies in Animals

Systemic Toxicity

In a 90-day subchronic study, the noncancer toxicity of acenaphthene resulting from repeated and prolonged exposures was investigated (EPA 1989c). Four groups of CD-1 mice (20/sex/group) were gavaged daily with 0, 175, 350, or 700 mg/kg-day acenaphthene for 90 days. The results of this study indicated no treatment-related effects on survival, clinical signs, body weight changes, total food intake, or ophthalmological alterations. Increased liver weight changes accompanied by microscopic alterations (cellular hypertrophy) were noted in both mid- and high-dose animals, and appeared to be dose-dependent. Additionally, statistically significant increases in cholesterol levels were observed in high-dose males and mid- and high-dose females. Although increased liver weights, without accompanying

microscopic alterations or increased cholesterol levels, were also observed at the low dose, this change was considered to be adaptive and not adverse.

Developmental/Reproductive Toxicity

No studies have been located concerning the developmental or reproductive toxicity of acenaphthene in experimental animals.

Other Systemic Effects

No studies were located that investigated any other systemic toxic effects of acenaphthene.

N.1.4 Toxicokinetics

Although little data are available regarding the absorption of PAHs, including acenaphthene, in humans following inhalation exposure, absorption of PAHs can be inferred from the presence of urinary metabolites of PAHs in workers occupationally exposed to these compounds (Becher and Bjorseth 1983) and from numerous animal studies. The high occupational concentration of PAHs, however, did not correspond to the amount of PAHs deposited, metabolized, and excreted in this study. The authors suggest that PAHs adsorbed to airborne particulate matter may not be bioavailable and that the dose-uptake relationship may not be linear over the entire PAH concentration range.

Indirect evidence also suggests that benzo(a)pyrene may not be readily absorbed following ingestion in humans (Hecht et al. 1979), but is readily absorbed following oral administration in the rat (Yamazaki et al. 1987). Intestinal absorption of PAHs appears to be highly dependent on the presence of bile in the stomach (Rahman et al. 1986).

Application of 2 percent crude coal tar to the skin of humans for 8-hour periods on 2 consecutive days showed evidence of PAH absorption of pyrene as well as other non-carcinogenic PAHs (Storer et al. 1984). Experimental data from skin penetration and metabolism study of topically applied BaP to skin samples from six mammalian species, including human, showed that metabolic viability was a major factor involved in the *in vitro* skin permeation (Kao et al. 1985). The extent of skin permeation after 24 hours was established as 3 percent of an applied dose of BaP (10 $\mu g/cm^2$).

PAHs have been divided into two groups, based on structural similarity and likely metabolic/detoxification pathways. These two groups have been termed "alternant" and "non-alternant" and differ in the electron density associated with the molecule. Alternant PAHs have an equally distributed electron density, whereas non-alternant PAHs have an uneven distribution of electron density from one portion of the molecule to the other and behave almost as if they were two different molecules. Structurally, alternant PAHs consist of multiple 6-membered rings, whereas non-alternant PAHs consist of several 6-membered ring,

and one 5-membered ring to which many of the 6-membered rings are attached. It is the 5-membered ring that contributes substantially to the uneven distribution of electron density. Generally, alternant PAHs are more potent than non-alternant PAHs (ATSDR 1990), and the mechanisms of carcinogenicity appear to be different between the two groups. Acenaphthene is a non-alternant PAH; others include acenaphthylene, benzo(b)fluoranthene, benzo(k)fluoranthene, fluoranthene, fluorene, and indeno(1,2,3-cd)pyrene.

The lipophilicity of PAHs enables them to readily penetrate cellular membranes and remain in the body indefinitely; however, the metabolism of PAHs alters these chemical compounds both structurally and chemically, and renders them more water-soluble and hence more excretable. Metabolism of PAHs occurs in all tissues. PAHs are biotransformed to chemically reactive intermediates that covalently bind to cellular macromolecules (i.e., DNA), leading to possible mutation and tumor initiation. Metabolites of PAHs include epoxide intermediates, dihydrodiols, phenols, quinones, and their various combinations. The "bay-region" (i.e., the sterically hindered cup-shaped area between carbons 10 and 11 of benzo(a)pyrene) intermediates of diol epoxides are currently considered to be the ultimate carcinogen for alternant PAHs (Jerina et al. 1980). Other alternant PAHs that have the bay-region structure are benzo(a)anthracene, chrysene, and dibenzo(a,h)anthracene. These diol epoxides are easily converted into carbonium ions, which are alkylating agents. The mechanism of systemic toxicity of non-carcinogenic PAHs such as acenaphthene has not been identified.

No studies have been found on the excretion of PAHs following inhalation, oral, or dermal exposure. Studies on the excretion of BaP in animals, however, have been characterized. The excretion of BaP in a mouse following a single intratracheal instillation of tritiated BaP (i.e., [^{3}H]-BaP) cleared rapidly with a half-life ($T_{1/2}$) of approximately 8 hours. After 24 hours, about 85 percent of the dosed BaP was cleared from the lung (Schnizlein et al. 1987). Rats also exhibited rapid clearance of BaP from inhalation, with 40 percent cleared within 5 minutes and >94 percent of the dose eliminated from the lung after 6 hours after exposure (Weyand and Bevan 1988). A large fraction of administered BaP was excreted in the bile (Weyand and Bevan 1986, 1988), and the rate of BaP excretion into bile declined as dose increased in rats and guinea pigs. Metabolites excreted in the bile included thioether conjugates (62.5 percent), glucuronide conjugates (22.8 percent), sulfate conjugates (7.4 percent), and free BaP (9.8 percent) (Weyand and Bevan 1988).

N.1.5 Toxicity Values

EPA has established an oral reference dose based on a NOAEL of 175 mg/kg-day from a 90-day subchronic toxicity study of acenaphthene in CD-1 mice (EPA 1993c). For chronic exposure to humans, an uncertainty factor of 3,000 has been applied to the NOAEL, which includes 10 for interspecies extrapolation, 10 for intraspecies variability, 10 for the use of a subchronic study for chronic NOAEL derivation, and 3 for lack of reproductive/developmental toxicity data and lack of toxicity data in a second species. Therefore, the chronic NOAEL for acenaphthene in humans is estimated to be 0.06 mg/kg-day (0.058 rounded to 0.06). For

subchronic human exposure, the uncertainty factor of 300 includes 10 for interspecies differences, 10 for intraspecies variability, and 3 for lack of adequate data on reproductive/developmental toxicity and in a second species. Therefore, the subchronic NOAEL for acenaphthene in humans is estimated to be 0.6 mg/kg-day.

N.2 ACENAPHTHYLENE

Acenaphthylene ($C_{12}H_8$, MW 152.2, CAS 208-96-8) belongs to the class of polynuclear aromatic hydrocarbons. In its pure form, acenaphthylene exists as solid prisms or plates recrystallized from alcohol. Acenaphthylene is soluble in water and organic media. Acenaphthylene is formed during the incomplete combustion of coal, oil, gas, garbage, or other organic substances.

N.2.1 Cancer

Acenaphthylene is not classified as carcinogenic, based on the lack of human data and inadequate data from animals studies. The EPA classifies acenaphthylene as a category "D" chemical, not classifiable as to human carcinogenicity (EPA 1993).

N.2.1.1 Epidemiologic Data in Humans

There is no epidemiologic data available that indicates that acenaphthylene causes cancer in humans.

N.2.1.2 Experimental Studies in Animals

Inhalation Exposure

No studies have been found that investigated the exposure of acenaphthylene by inhalation in experimental animals.

Oral Exposure

No studies have been found that investigated the exposure of acenaphthylene by ingestion in experimental animals.

Dermal Exposure

There is insufficient evidence that acenaphthylene is carcinogenic via dermal exposure. The only data reported were from a lifetime study, in which 0.25 percent acenaphthylene (purity not specified) was applied to the skin of mice (sex and strain not specified). No information was given regarding the use of controls, or the dose, frequency, or duration of acenaphthylene application. No tumors were observed (Cook 1932).

Other Exposure Routes

No studies have been found that investigated the exposure of acenaphthylene by ingestion in experimental animals.

N.2.2 Mutagenicity

Acenaphthylene (1 mM) yielded positive results in *S. typhimurium* in a forward mutation assay (Kaden et al. 1979), but was not positive in tester strains TA98 and TA100 in the presence of hepatic homogenates (Bos et al. 1988). Acenaphthylene was also not mutagenic in *S. typhimurium* tester strains TA1537 and TA1538 using a pour-plate technique at concentrations of 0, 10, 100, or 250 μg/mL (Gatehouse 1980).

N.2.3 Toxicity

There were no studies located that investigated the toxicity of acenaphthylene. Because of the absence of toxicity data, the toxicity of pyrene was considered representative of the toxicity of acenaphthylene.

N.2.4 Toxicokinetics

No studies have been found on the toxicokinetics of acenaphthylene specifically; however, the toxicokinetics of PAHs as a class of compounds is discussed in Section **A.1.4** above.

N.2.5 Toxicity Values

The oral R_fD for acenaphthylene is pending, and there is no inhalation R_fC for acenaphthylene. The R_fD for pyrene is considered representative of that for acenaphthylene in this risk assessment.

N.3 ACETONE

The following toxicity profile is excerpted from TRC 1994:

The chronic oral R_fD for acetone is 0.1 mg/kg-day (EPA 1993) and is based on a subchronic oral study in rats. Acetone was administered by gavage for 90 days to groups of albino rats at doses of 0, 100, 500, or 2,500 mg/kg-day. The LOAEL was 500 mg/kg-day and the critical effects were increased liver and kidney weights and nephrotoxicity. An uncertainty factor of 1,000 was applied to the NOEL of 100 mg/kg-day to obtain the R_fD. The uncertainy factor was used to account for inter- and intraspecies variability and the use of subchronic data. The confidence level in this R_fD is low. The subchronic oral R_fD for acetone is 1 mg/kg-day (EPA 1993) and is based on the same gavage study.

Since inhalation R_fDs for acetone are not available at this time (EPA 1993), the oral R_fDs are cross-assigned to inhalation.

The EPA weight-of-evidence classification for the carcinogenicity of this compound is "D"—not classifiable as to human carcinogenicity (EPA 1993).

N.4 ALUMINUM

The following toxicity profile is excerpted from TRC 1994:

Aluminum is one of the most abundant metals in the earth's crust, and it is ubiquitous in air, water, and soil (Goyer 1986). The toxicity of aluminum can be divided into three major categories: (1) the effect of aluminum compounds in the gastrointestinal tract; (2) the effect of inhalaton of aluminum compouns; and (3) systemic toxicity of aluminum. Aluminum compounds can alter absorption of other elements in the gastrointestinal tract (i.e., fluoride, calcium, iron, cholesterol, phosphorus) and later, gastrointestinal tract mobility by inhibition of acetylcholine-induced contractions. Inhalation of aluminum dusts can lead to the development of pulmaonary fibrosis, producing both restrictive ad obstructive pulmonary disease. A progressive fatal neurologic syndrome has been noted in patients on long-term intermittent hemodialysis treatment for chronic renal failure and may be due to aluminum intoxication. Symptoms in these patients include a speech disorder followed by dementia, convulsions and myoclonus. Aluminum content of brain, muscle and bone tissues is increased in these patients. Sources of the excess aluminum may be from oral aluminum hydroxide commonly given to these patients, or from aluminum in dialysis fluid derived from tap water used to prepare the dialysate fluid. The available data have been evaluated and found to be inadequate for quantitative non-cancer risk assessment (EPA 1993). EPA (1993) has not evaluated aluminum with respect to its potential human carcinogenicity. The value for the chronic oral $R_fD$was obtained from the EPA Environmental Criteria Assessment Office, and may be subject to change or revision.

N.5 ANTHRACENE

Anthracene ($C_{14}H_{10}$, MW 178.2, CAS registry number 120-12-7) belongs to the class of polynuclear aromatic hydrocarbons. In its pure form, anthracene is a solid tablet or monoclinic prism and colorless. Anthracene is virtually insoluble in water, but soluble in organic media such as benzene. Anthracene has been primarily used as an intermediate in dye production, but also in smoke screens, scintillation counter crystals, and organic semiconductor research. Anthracene occurs ubiquitously as a by-product of incomplete combustion (as in MGP wastes), and in fossil fuels, cigarette smoke, exhaust emissions, and charcoal-broiled steaks to name a few (IARC 1983).

N.5.1 Cancer

Anthracene is not classified as carcinogenic, based on the lack of human data and inadequate data from animals studies. The EPA classifies anthracene as a category "D" chemical, not classifiable as to human carcinogenicity (EPA 1993).

N.5.1.1 Epidemiologic Data in Humans

There have been no reported studies of cancer in humans from exposure to anthracene.

N.5.1.2 Experimental Studies in Animals

Inhalation Exposure

No studies have been found that investigated the exposure of anthracene by inhalation in experimental animals.

Oral Exposure

No tumors were observed in a subchronic toxicity study of anthracene administered to CD-1 (ICR)BR mice by gavage at doses of 1, 250, 500, or 1000 mg/kg-day. No treatment-related effects were noted and the no-observed-adverse-effect level is the highest dose tested (EPA 1993). No tumors were observed in rats (BDI or BDIII) fed anthracene in the diet for a total dose of 4.5 g (28 mg/kg-day) for 78 weeks (initially 5 mg and later 15 mg highly purified anthracene in oil) (Schmal 1955).

Dermal Exposure

The dermal application of anthracene was studied primarily in mice, and there were no reported skin tumors (IARC 1983). In a majority of the studies, strain, sex, age, and body weights of the test animals were not specified, and also the purity, dose, and frequency of anthracene exposure were not given. The mortality rate was high in several studies. The initiating activity of anthracene applied to mouse skin has been investigated as well. These studies, although limited, do not indicate that exposure to anthracene results in tumor formation (Kennaway 1924a,b; Maisin et al. 1926, 1927; Wynder and Hoffmann 1959). The initiating activity of anthracene has been investigated as well, and results were negative (Salaman and Roe 1956; Scribner 1973; Miescher 1942).

Other Exposure Routes

No tumors were observed in female Osborne-Mendel rats that received a single lung implant of anthracene (0.5 mg) dissolved in a 0.05 ml mixture of beeswax and trioctanoin (Stanton et al. 1972).

N.5.2 Mutagenicity

Anthracene has consistently been negative in tests for reverse and forward mutagenicity and DNA damage in prokaryotic, yeast, and eukaryotic test systems (EPA 1993). It did not induce unscheduled DNA synthesis in HeLa cells in the presence of exogenous activating system (rat liver mixed function oxidase preparation) (Martin et al. 1981).

N.5.3 Toxicity

N.5.3.1 Epidemiologic Data in Humans

Acute Toxicity

Anthracene can cause acute dermatitis with symptoms of burning, itching, and edema associated with irritation of the conjunctiva and upper airways. Other symptoms are lacrimation, photophobia, edema of the eyelids and conjunctival hyperemia. Acute symptoms disappear within several days after cessation of contact.

Chronic Toxicity

There is minimal information on the systemic effect of anthracene in humans. In one study of oral exposure, humans that ingested anthracene-containing laxatives (concentration not specified) for prolonged periods of time had an increased incidence of melanosis (unusual deposit of black pigments) of the colon and rectum (Badiali et al. 1985). The study was very limited and did not account for other factors that may contribute to the pathogenesis of melanosis. Also, in studies of the treatment of psoriasis, anthracene in an alcohol N-methyl-2-pyrrolidone vehicle induced photosensitive reactions when administered topically in low concentrations to humans in combination with ultraviolet radiation (Urbanek 1980; Walter 1980).

N.5.3.2 Experimental Studies in Animals

Acute Toxicity

The LD_{50} for the mouse is >430 mg/kg bw by intraperitoneal injection (Salamone 1981).

Systemic Toxicity

Enzyme alterations in the mucosa of the gastrointestinal tract have been observed in rats acutely exposed to 100 mg/kg-day anthracene (Nousiainen et al. 1984). Carboxylesterase activity was suppressed by 13 percent. Although enzyme alteration in the absence of other signs of toxicity is not considered an adverse effect, this may precede more serious effects.

One study has been conducted on the subchronic toxicity of anthracene. Anthracene was repeatedly administered to groups of 20 male and female CD-1 (ICR)BR mice by gavage at doses of 0, 250, 500, and 1000 mg/kg-day for at least 90 days (EPA 1989d). There were no pathological, clinical chemistry, or hematological alterations observed resulting from the treatment of anthracene in this study. There were no studies located regarding the chronic toxicity of anthracene.

Developmental/Reproductive Toxicity

No studies have been found that investigated the developmental and reproductive toxicity or other systemic effects of anthracene in experimental animals.

Other Systemic Effects

In a study combined with ultraviolet radiation, hairless mice pretreated with anthracene in methanol (0.1g/L; 40 μL/20 cm^2 skin) and then exposed to UV radiation at >290 nm produced a more serious inflammatory response than with methanol alone (Forbes et al. 1976).

N.5.4 Toxicokinetics

No studies have been found on the absorption of anthracene specifically; however, the toxicokinetics of PAHs as a class of compounds is discussed in Section **A.1.4** above. In an *in vitro* experiment, the 1,2-dihydrodiol has been identified as the major metabolite of anthracene following incubation with exogenous activating system (Akhtar et al. 1979). The 1,2-dihydrodiol, 9.10-anthraquinone, 9,10-dihydrodiol, and 2,9,10-trihydroxyanthracene have been found in rat urine together with conjugates consistent with the formation of the 1,2-oxide (Sims 1964).

N.5.5 Toxicity Values

The subchronic NOAEL in animals is considered to be the highest dose tested (1000 mg/kg-day). For subchronic human exposures, an uncertainty factor of 300 includes 10 for interspecies variability, 10 for intraspecies variability, and 3 for lack of repoductive/ developmental toxicity and adequate second-species data. The subchronic NOAEL for anthracene in humans is estimated to be 3 mg/kg-day. For chronic human exposures, an uncertainty factor of 3,000 includes 10 for interspecies variability, 10 for intraspecies variability, 10 for the use of a subchronic study for chronic NOAEL derivation, and 3 for lack of reproductive/developmental toxicity and adequate second-species data. Therefore, the chronic NOAEL for anthracene in humans is estimated to be 0.3 mg/kg-day.

N.6 ANTIMONY

Antimony (Sb, CAS registry number 7440-36-0) is an element typically used in metal alloys, rubber, matches, ceramics, pigments, paints, lacquers, and textiles. Some trivalent organic antimony compounds are used to treat parasitic diseases such as *Schistosomiasis* (ATSDR 1990).

N.6.1 Cancer

Antimony is currently not classified with regard to its potential for carcinogenicity (EPA 1994a). Lung tumors have been observed in rats exposed via inhalation to 4.2 or 36 mg antimony/m^3 as antimony trioxide (Groth et al. 1986; Watt 1980, 1983) or to 17.48 mg antimony/m^3 as antimony trisulfide, for 1 year (Groth et al. 1986; Wong et al. 1979). An increased incidence of lung tumors was not observed, however, in rats exposed via inhalation to 3.76 mg antimony/m^3 as antimony trioxide for 1 year (Biodynamics 1989) or in pigs exposed to 4.2 mg antimony/m^3 as antimony trioxide for 1 year (Watt 1983). The carcinogenic potential of antimony compounds in rodents may be related to particle size and rates of deposition and clearance from the respiratory tract. Oral exposure to 0.35 mg/kg-day of potassium antimony tartrate over a lifetime did not induce cancer in rats (Schroeder et al. 1970) or mice (Kanisawa and Schroeder 1969). No data are available to evaluate the potential carcinogenicity of antimony compounds via dermal exposure.

N.6.2 Mutagenicity

No *in vivo* genotoxic studies have been conducted with antimony compounds. *In vitro* studies have yielded mixed results with antimony compounds giving positive results for DNA damage in bacterial tests (Kanematasu et al. 1980) and for chromosomal aberrations and breakage in mammalian cell assays (Tu and Sivak 1984; Paton and Allison 1972), and negative results for gene mutation and chromosomal transformation in mammalian cell assays (Tu and Sivak 1984).

N.6.3 Toxicity

Oral Exposure

Adverse health effects have been observed in humans and animals following oral exposure to a variety of antimony compounds (ATSDR 1990). Oral administration of a single dose of an organic antimony compound resulted in death in rats (Bradley and Frederick 1941) which was attributable to myocardial failure. Mortality was not observed in rats following a single dose of inorganic antimony (Fleming 1982; Myers et al. 1978; Smyth and Thompson 1945), suggesting that inorganic antimony compounds are less toxic than organic antimony compounds. Chronic ingestion by rats of 0.35 mg/kg-day of potassium antimony tartrate in

drinking water has resulted in increased mortality and altered blood chemistry (Schroeder et al. 1970). Other studies with potassium antimony tartrate have not demonstrated any effects on longevity (Schroeder et al. 1968; Kanisawa and Schroeder 1969).

Antimony compounds are frequently used in medicine as anti-parasitical agents. Therapeutic administration of antimony-containing compounds has produced cardiac effects, liver toxicity, pulmonary congestion, skin reactions, vomiting, diarrhea, gastric discomfort and ulcers in treated humans (ATSDR 1990). Acute exposure to an antimony-containing therapeutic agent administered via intramuscular injection resulted in the death of an adult and a child (Rugemalila 1980); however, it is not clear whether these deaths were attributable solely or in part to antimony administration.

Inhalation Exposure

The respiratory tract is a target organ in both humans and animals following inhalation exposure to antimony. High occupational inhalation exposure to antimony dusts has resulted in respiratory tract irritation, pneumoconiosis, and impaired pulmonary function in workers (Cooper et al. 1968; Potkonjak and Pavlovich 1983). These workers, however, were also exposed to other toxic compounds, including arsenic oxide, iron oxide, hydrogen chloride, and hydrogen sulfide, and thus it is not possible to attribute the observed adverse effects solely or in part to antimony exposure. Dermatosis and ocular irritation have also been reported in humans following exposure to airborne antimony (Potkonjak and Vishnijich 1983).

Animal studies have shown that lung fibrosis and lipoid pneumonia may occur as a result of chronic inhalation exposure to antimony trisulfide or antimony trioxide (ATSDR 1990). Other symptoms include: changes in blood pressure and EKG readings; gastrointestinal effects such as vomiting, diarrhea, gastric discomfort and ulcers; and liver toxicity.

Dermal Exposure

Exposure to airborne antimony has been reported to cause dermatosis and ocular conjunctivitis in humans which may result from dermal contact with the antimony aerosol (ATSDR 1990). Alopecia was noted in rats exposed to airborne antimony trioxide at doses of 0.92 mg/m^3 or above (Biodynamics 1985); however, it was not clear whether this effect was due to dermal contact or to a systemic effect resulting from airborne exposure.

N.6.4 Toxicokinetics

Data from animal studies indicate that absorption of antimony compounds from the respiratory tract is a function of particle size (ATSDR 1990). A greater deposition of antimony tartrate in the upper respiratory tract was observed with a particle size of 1.6 μm mean mass aerodynamic diameter (MMAD) compared with exposure to particles of 0.7 or 0.3 μm

MMAD (Felicetti et al. 1974; Thomas et al. 1973). Absorption and lung clearance rates also varied with particle size (Thomas et al. 1973). No information is available on differences in absorption rates via inhalation among antimony compounds (ATSDR 1990).

In animals, antimony is slowly absorbed from the gastrointestinal tract at rates ranging from 2 percent to 7 percent for antimony tartrate and antimony trichloride (Felicetti et al. 1974; Gerber et al. 1982). It has been suggested that gastrointestinal absorption of antimony salts in humans is probably less than 10 percent (ATSDR 1990). Although quantitative information on differences in absorption among antimony compounds is not available, the ICRP (1981) has recommended that 10 percent for antimony tartrate, and 1 percent for all other forms of antimony, be used as reference values for gastrointestinal human absorption.

Distribution in animals of trivalent antimony absorbed via inhalation tends to result in concentration in red blood cells and liver, while pentavalent antimony concentrates in the plasma (Goyer 1991). Other target organs of distribution include the thyroid gland, skeleton and fur (Felicetti et al. 1974). Following oral absorption, the major sites of accumulation of antimony compounds are the liver, kidney, bone, lung, spleen, and thyroid (Sunagawa 1981). Accumulation in these organs, however, is not dose-related, suggesting that decreased absorption occurs at higher antimony concentrations.

Antimony does not undergo biotransformation. Its metabolism appears to consist mainly of covalent interactions with sulfhydryl groups and phosphate, and reversible binding interactions with endogenous ligands such as proteins (ATSDR 1990). The toxicological significance of these interactions is not known (ATSDR 1990).

Excretion appears to occur mainly in the urine in humans occupationally exposed to airborne antimony trioxide (Ludersdorf et al. 1987). In animals, antimony is excreted via the urine and feces. If antimony is administered parenterally, the urine/feces ratio of antimony excretion depends on the valence form of the compound: for trivalent antimony injection, urine is the predominant medium of excretion, whereas for pentavalent antimony injection, excretion in the feces predominates (Edel et al. 1983; Felicetti et al. 1974). With regard to oral exposure, animal studies have shown that ingested antimony is not well absorbed from the gastrointestinal tract and that fecal excretion is the primary route of excretion (Felicetti et al. 1974b; Gerber et al. 1982). It is likely that this route is also predominant for humans who ingest antimony compounds.

N.6.5 Toxicity Values

EPA has established an oral reference dose (R_fD) of 0.0004 mg/kg-day for antimony compounds. Fifty male and fifty female rats were administered 5 ppm potassium antimony tartrate (5 mg/L) in drinking water over their lifetime (Schroeder et al. 1970). During the course of the study, growth rates were not altered but both male and female rats exhibited significantly shortened lifespans, surviving 106 and 107 days, respectively, less than control

males and females. Nonfasting blood glucose levels were decreased in treated males and cholesterol levels were altered in both sexes. A decrease in mean heart weight for males was also noted. No increase in tumor incidence associated with treatment was observed. Since there was only one dose group, a NOAEL could not be determined. The LOAEL was 5 ppm or 0.35 mg/kg-day. Using an uncertainty factor of 1000 (10 for interspecies conversion, 10 for intrahuman sensitivity, and 10 for the use of a LOAEL), the oral R_fD was calculated as 0.0004 mg/kg-day.

N.7 ARSENIC

Arsenic (As, MW 74.9, CAS registry number 7440-38-2) is an ubiquitous metalloid present in the environment from natural and anthropogenic sources. Arsenic is a natural component of the earth's crust. It originates from natural sources such as volcanoes and erosion from mineral deposits, but also from human activities such as chemical production and use, coal combustion, and waste disposal. Arsenic can exist in several different valence states and in many different inorganic and organic forms. The form of arsenic with the greatest commercial importance is inorganic arsenic trioxide (As_2O_3), which is produced from flue dust collected during the smelting of copper and lead. There has been no commercial production of As_2O_3 in the United States since 1985, although it is imported for industrial use.

Arsenic is one of the most widely studied toxicants. Analysis of the toxic effects of arsenic is complicated by the fact that arsenic can exist in several different inorganic and organic compounds. Most cases of human toxicity have been associated with exposure to inorganic arsenic (ATSDR 1991a). While As_2O_3 is the most common inorganic arsenical in air, a variety of inorganic trivalent arsenites or pentavalent arsenates occur in water, soil, and food (ATSDR 1991a). Trivalent arsenites are somewhat more toxic than pentavalent arsenates (EPA 1993); however, the difference in relative potency is small. An additional complexity in the analysis of arsenic toxicity is that there are no suitable animal models for carcinogenicity.

N.7.1 Cancer

EPA has classified arsenic as a human carcinogen (category "A"), based on observations of increased lung cancer mortality in populations exposed mainly via inhalation and of increased skin cancer incidence in populations consuming drinking water containing high concentrations of arsenic (EPA 1993a).

There is evidence from a large number of occupational epidemiologic studies that high-dose inhalation exposure to inorganic arsenic is associated with an increase in lung cancer. Most studies involve workers exposed primarily to arsenic trioxide dust in air at copper smelters (e.g., Enterline et al. 1987; Enterline and Marsh 1982; Axelson et al. 1978), but increased incidence of lung cancer has also been observed at chemical plants where exposure was primarily to arsenate (Ott et al. 1974; Sobel et al. 1988). Although several studies suggest

that residents living near smelters or arsenical chemicals may also have increased risk of lung cancer (Pershagen 1985; Brown et al. 1984), the increases are small and may not be biologically significant (e.g., Frost et al. 1987).

Several human studies provide sufficient exposure data to permit quantification of cancer risk (Tseng et al. 1968; Tseng 1977). In general, the data indicate that there is an approximately linear increase in relative risk as a function of increasing cumulative exposure (EPA 1993a). Animal studies do not show evidence of a carcinogenic effect from inhalation exposure of arsenic (EPA 1993a); however, two intratracheal instillation studies in hamsters have demonstrated that both arsenite and arsenate can increase the incidence of lung adenomas and/or carcinomas (Ishinishi et al. 1983; Pershagen and Bjorklund 1985).

One of the most reliable epidemiologic studies that provides dose-response data is the investigation by Tseng et al. (1968). In this study, the quantitative risk of skin cancer from exposure to inorganic arsenic by ingestion was examined. In this investigation, 40,421 people in Taiwan were exposed to arsenic in drinking water at levels ranging from 100 to 1,800 μg/L. The control population consisted of 7,500 people who were exposed to non-detectable levels up to 17 μg/L arsenic in drinking water. Results showed an age- and dose-dependent increase in the incidence of skin cancer in the exposed population, while there were no arsenic-related skin cancers detected in the control population. The EPA used this study to calculate a unit risk of 5×10^{-5} based on lifetime exposure to water containing 1 μg As/L.

N.7.2 Mutagenicity

Arsenic has been tested in a range of prokaryotic and eukaryotic systems. In general, arsenic is either inactive or extremely weak as an inducer of gene mutations *in vitro*; however, it is clastogenic and induces sister chromatid exchanges in a variety of cell types, including human cells (EPA 1988b). Arsenic does not appear to induce chromosome aberrations *in vivo* in experimental animals; however, it may do so in humans (NRC 1977). Several studies also suggest that arsenic may affect DNA by the inhibition of DNA repair processes or by base-pair substitution (EPA 1988b).

N.7.3 Toxicity

N.7.3.1 Epidemiologic Data in Humans

Workers exposed to arsenic dusts in air may experience irritation to the mucus membrane of the nose and throat, which may lead to laryngitis, bronchitis, or rhinitis (Morton and Caron 1989). Very high exposures may cause perforation of the nasal septum (Pinto and McGill 1953). These effects, including perforation, were usually mild and did not result either in impaired respiration or illness. Several studies revealed that inhalation of high levels of arsenic dust or fumes led to nausea, vomiting, and diarrhea in workers (Beckett et al. 1986; Bolla-Wilson and Bleecker 1987; Morton and Caron 1989). Neurological injury may occur in

humans after inhalation of inorganic arsenic, including peripheral neuropathy of sensory and motor neurons (numbness, loss of reflexes, muscle weakness) (Feldman et al. 1979; Landau et al. 1977). Hallucinations, agitations, emotional lability, and memory loss may also result (Beckett et al. 1987; Morton and Caron 1989). Adverse neurological effects tend to diminish, but may persist past exposure period (Beckett et al. 1987).

Developmental effects of arsenic exposure have been implicated in the unborn fetuses of pregnant women living near a copper-smelting plant in Bulgaria (Tabacova 1986). Fatal defects (e.g., small forebrains and underdeveloped earpits) occurred at a rate of 3.6 per 1,000 live births, which is three times the national rate. From a cohort of about 15,000 women living near the plant, increased placental concentration of arsenic, elevated lipid peroxides, and decreased GSH in maternal and cord blood were found. This suggested that arsenic was responsible for the oxidative damage in the pathogenesis of prenatal birth defects. The hypothesis was tested in an experimental *in vitro* mouse embryo model.

N.7.3.2 Experimental Studies in Animals

Systemic Toxicity

Chronic exposure of experimental animals to arsenic have been described by several studies. Tissues which are adversely affected by arsenic exposure include the gastrointestinal, cardiovascular, hematopoietic, renal, nervous, and respiratory systems.

In a chronic toxicity study, beagle dogs (6/group) were fed sodium arsenate or sodium arsenite at dosed of 5, 25, 50, or 125 ppm arsenic in the diet, which corresponds to an average daily dose of 0.2, 1.0, 2.1, or 5.2 mg As/kg-day assuming a body weight of 12 kg for each dog (Byron et al. 1967). Four out of six dogs fed the highest dose of As died within 9 months. The main effects were anorexia and listlessness, with weight loss of 44–61 percent from the beginning of the study. Moderate anemia and atrophy of numerous tissues were revealed after hematologic and histologic examinations. A chronic NOAEL of 2.1 mg As/kg-day was identified in dogs since there was no difference between controls and dogs fed 50 ppm As^{3+} or As^{5+} in their diet.

In a 1-year study involving rhesus monkeys were exposed to As^{5+} (as $2Na_3(PO_4AsO_4VO_4)\cdot$ "NaF" $18H_2O$) in milk at doses of 2.8 mg/kg-day (3-day and 8-week old monkeys) and 5.7 mg/kg-day (8-weeks old) (Heywood and Sortwell 1979). Effects seen in one monkey dosed with 2.8 mg As/kg-day beginning at 3 days of life included sudden weakness, dehydration along with bronchopneumonia, hemorrhage, edema, and necrosis in the brain. Another animal from the highest dose of arsenic, had acute inflammation of the small intestine and moderate regression of the thymus. Surviving animals had normal EEGs and normal levels of neurological function. There was no evidence of delayed toxicity in surviving animals.

Male weanling Sprague-Dawley rats (10/group) were exposed to 0 or 50 μg/mL sodium arsenate for 320 days in drinking water (Carmignani et al. 1983). Histological examination revealed that the liver and kidneys accumulated significant levels of arsenic at 25.2 and 43.0 mg/kg, respectively, and swollen hepatocytes were noted near the centrilobular veins of the liver. Focal changes in the glomerulus and tubules were seen in the kidneys. No changes were noted in the myocardium, gastrocnemius, arterial vessels, lungs, brain, or sciatic nerves. Sympathetic hyperactivity, hypersensitivity, or both were induced by arsenic, and the authors speculated that these findings may explain the cardiovascular effects in people chronically exposed to arsenic.

CD male and female mice were fed 5 mg As^{3+}/L sodium arsenite in their drinking water, which corresponds to 0.35 mg/kg-day, in a special environment designed to minimize exposure to trace metals (Schroeder and Balassa 1967). After 180 days, growth rate and body weights were not affected, but a decrease in body weight in males was apparent after 360 and 540 days. There was also a decrease in survival rates at 18 months in males and 21 months in females, with a median life span that was reduced by 74 and 76 days in males and females, respectively.

Developmental Toxicity

High levels of arsenic can cause developmental effects in animals. Slight decreases in fetal weight resulted after mice were exposed to 2 mg As/m^3 as As_2O_3 on days 9–12 of gestation. Higher levels of arsenic (20 mg/m^3) produced skeletal malformations and an increase in fetal deaths (Nagymajtenyi et al. 1985). Other studies have reported an increase in fetal mortality from 2–68 mg As/kg-day sodium arsenite (Baxley et al. 1981; Hood and Harrison 1982). Baxley et al. (1981) exposed pregnant CD-1 mice to single oral doses of 1, 20, 40, or 45 mg/kg sodium arsenate by gavage on days 8–15 of gestation. The frequency of dead or resorbed fetuses was significantly elevated in animals exposed to 40 or 45 mg/kg on days 10, 12, 13, 14, or 15 of gestation. Hood and Harrison (1982) exposed pregnant hamsters to a single gavage dose of 25 mg/kg sodium arsenite on days 8, 11, or 12 of gestation, or 20 mg/kg on days 9 or 10. Prenatal mortality was significantly elevated in animals dosed with 25 mg/kg on gestational days 8 or 12. Small increases in the percentage of fetuses that were malformed were noted in treated groups, although these were not significant. Similarly, Hood and Harrison (1982b) performed a similar experiment in hamsters dosed by a single intraperitoneal amount of 5 mg/kg sodium arsenite on days 8, 11, or 12, or 2.5 mg/kg on days 9 or 10 of gestation. Again, prenatal mortality was elevated, and although there were small increases in malformations, they were not significant. Hood and Harrison concluded that arsenite is significantly less toxic when administered orally than intraperitoneally. Intraperitoneal injections of 45 mg/kg sodium arsenite on days 6-12 of gestation in pregnant Swiss-Webster mice resulted in the following fetal malformations: exencephaly, micrognathia, protruding tongue, agnathia, open eye, exophthalmos, anophthalmia, missing pinna, cleft lip,

hydrocephalus, umbilical hernia, eventration, ectrodactyly, micromelia, limb and tail malformations, and skeletal defects. Similar adverse effects were seen in exposed Wistar rat fetuses (Beaudoin 1974), golden hamsters (Willhite 1981; Carpenter 1987).

Fetal mortality was increased and malformation resulted in experimental animals exposed to organic forms of arsenic. Albino CD rats and CD-1 mice given repeated doses DMA, a metabolite of arsenic, during gestation had significantly elevated fetal mortality and showed developmental effects: skeletal anomalies (delayed ossification and supernumerary ribs), malformed palate, cleft lip, reduced fetal weight (Rogers et al. 1981).

Reproductive Toxicity

There was one study that examined the reproductive toxicity of arsenic in animals. In a three-generation study in Charles River mice given sodium arsenate in drinking water at an average dose of 0.35 mg As^{3+}/kg-day, there were no significant effects detected, although a trend toward a decreased number of pups per litter and slightly altered male:female sex ratios were observed (from 1.03 to 1.30 in the F_2 generation, and from 1.00 to 1.71 in the F_3 generation (Schroeder and Mitchener 1971).

In another study, male and female Harlan/ICR Swiss mice dosed 3 times per week for 10 weeks with 0, 11.9, or 119 mg/kg-day MMA, a metabolite of As, prior to mating and during gestation produced fewer litters than normal (Prukop and Savage 1986). None of the animals receiving the highest dose of MMA produced litters, and only 50 percent of the animals dosed with 11.9 mg/kg-day MMA produced litters, compared with 80–100 percent in controls. This was attributed to decreased fertility of the male mice.

Other Systemic Effects

No studies have been located that discuss other systemic effects of exposure to arsenic in experimental animals.

N.7.4 Toxicokinetics

Most of the existing data on the toxicokinetics of arsenic is on the inorganic form. Both arsenate and arsenite are well absorbed by both the oral and inhalation routes.

Arsenic in air exists as particulate matter and absorption by inhalation involves deposition of the particles onto the surface of the lungs and absorption of arsenic from the deposited material. Deposition was estimated to be about 40 percent and absorption was 75–85 percent in lung cancer patients exposed to arsenic in cigarette smoke (Holland et al. 1959), making the percentage of inhaled arsenic 30–34 percent. Animal studies on As (i.e., sodium arsenite, sodium arsenate, and arsenic trioxide) via intratracheal instillation suggested that nearly all of the deposited material was absorbed, because clearance of the compounds from the lungs was

rapid and nearly complete (60–90 percent cleared within 1 day) (Marafante and Vahter 1987; Rhoads and Sanders 1985). In contrast, insoluble forms of As (i.e., arsenic sulfide and lead arsenate) cleared more slowly, suggesting that the rate of absorption is lower for the insoluble forms of arsenic (ATSDR 1991a).

Absorption of arsenates and arsenites across the gastrointestinal tract is nearly complete. Measurements of human fecal excretions given oral doses of arsenite reported that less than 5 percent was recovered, indicating that absorption was about 95 percent (Bettley and O'Shea 1975). Again, ingestion of less insoluble forms of arsenic such as arsenic triselenide did not lead to a high percentage of absorption across the gastrointestinal tract (Mappes 1977).

The data on dermal absorption of inorganic arsenic are limited and not quantitative.

Once absorbed, arsenic is distributed throughout the body to the liver, kidney, skeleton, gastrointestinal tract, and other tissues. Autopsies of people exposed to background levels of arsenic revealed that arsenic is present in all tissues of the human body at approximately comparable concentrations (Liebscher and Smith 1968). Absorbed arsenic can also cross the placenta and be distributed to fetuses (Hood et al. 1987, 1988). The metabolites of both inorganic and organic arsenic appeared to be distributed equally in all body tissue following oral exposure (Takahasi et al. 1988; Yamauchi and Yamamura 1984, 1985; Stevens et al. 1977; Yamauchi et al. 1988).

Several *in vivo* and *in vitro* studies have elucidated the metabolic and detoxification pathway for arsenic in mammals (Vahter 1981; Vahter and Envall 1983; Hirata et al. 1988; Marafante and Vahter 1987; Takahashi et al. 1988; Maiorino and Aposhian 1985; Marafante et al. 1985; Vahter and Marafante 1983), including humans (Buchet et al. 1981a, 1981b; Crecelius 1977; Lovell and Farmer 1985; Smith et al. 1977; Tam et al. 1979; Vahter 1986), and have been reviewed by Thompson (1993). Analysis of urinary excretion products from humans and animals revealed increased levels of inorganic As^{3+}, As^{5+}, methylarsonic acid (MMA), and dimethylarsonic acid (DMA). The metabolism of inorganic arsenic involve two processes: oxidation/reduction of As^{5+} and As^{3+} species and methylation. Specifically, inorganic arsenic is converted via methylation in the liver to MMA and to DMA, which is the principal metabolite. Both MMA and DMA form conjugates with glutathione or glutathione derivatives and are excreted in urine. Since methylation is enzyme-dependent, saturation kinetics appear to determine the toxicity, or carcinogenicity, of arsenic in humans. At low doses, arsenic can be effectively detoxified; whereas at higher doses, the detoxification pathway may become increasingly saturated, thereby increasing the possibility of macromolecular binding, resulting in pathological changes which could include tumors (EPA 1992a). Data on the point at which saturation is reached is unclear according to EPA (1992a).

N.7.5 Toxicity Values

Data by Tseng (1977) and Tseng et al. (1968) from a population epidemiology study in Taiwan were used to derive an ingestion R_fD of 0.3 μg/kg-day (EPA 1993a). The critical effects were considered to be hyperpigmentation, keratosis, and possible vascular complications. Since hyperpigmentation and keratosis of the skin are lesions that potentially may progress to skin neoplasms, this toxic endpoint is considered to be appropriate for R_fD derivation. The NOAEL is derived by multiplying the average concentration in drinking water by 4.5 L/day (because of the hot climate, typical daily drinking estimates are approximately doubled for this study population), adding in the contribution of arsenic in food, and dividing exposure by average body weight for Taiwanese adults (Abernathy et al. 1989). The EPA has derived a R_fD of 0.3 μg/kg-day incorporating an additional uncertainty factor of 3 for the lack of data concerning the potential toxicity of arsenic.

EPA has not derived an inhalation R_fC for arsenic (EPA 1993a). For this assessment, oral values have been cross-assigned to inhalation values.

Considerable scientific controversy has surrounded the derivation of an estimated CPF for arsenic by ingestion, principally drinking water. Based on a study in Taiwan (Tseng 1977; Tseng et al. 1968), EPA has developed a CPF for drinking water of 5×10^{-5} (μg/L)$^{-1}$ which is equivalent to an ingestion CPF from food of 2.5×10^{-5} (μg/person/day)$^{-1}$, or 1.8×10^{-3} (μg/kg-day)$^{-1}$) (EPA 1993a). This estimate was used to generate an oral slope factor of 1.8 (mg/kg-day)$^{-1}$. The CPF for ingestion was adopted in this risk assessment for skin contact, as a default condition. The inhalation CPF is based on the geometric means of several occupational epidemiologic studies in which workers exposed to high concentrations of airborne arsenic had significantly increased lung cancer incidences. The inhalation CPF is 4.3×10^{-3} (μg/m^3)$^{-1}$ [= 1.5×10^{-2} (μg/kg-day)$^{-1}$)] (EPA 1993a).

N.8 BENZENE

Benzene (C_6H_6, MW 78.1, CAS registry number 71-43-2) is a volatile, colorless, and liquid aromatic hydrocarbon with a characteristic odor. Environmental emissions of benzene originate primarily from anthropogenic sources, although a small amount arises from natural sources (i.e., forest fires and volcanoes). Benzene is obtained primarily from petroleum, with coal being a minor secondary source. Benzene is used commercially by the chemical industry as an intermediate in the manufacture of a wide range of chemical products and in the manufacture of plastics. As a result of its anti-knock characteristics, benzene is also an important component of unleaded gasoline. Until recently, benzene was used as a solvent in a wide variety of applications; however, its use as a solvent has been greatly curtailed in recent years due to its adverse health effects in humans.

N.8.1 Cancer

Benzene has been classified as a known human carcinogen (category "A") by the EPA, based on several occupational epidemiology studies showing an increased incidence of nonlymphocytic leukemia associated with high workplace exposures (EPA 1993). Supporting evidence comes from rodent studies in which benzene induced tumors in multiple species at multiple sites when administered either by inhalation or by gavage (EPA 1993). When administered by gavage, tumors induced by benzene included leukemias/lymphomas in both sexes of rats (Maltoni et al. 1983) and in both sexes of mice (NTP 1986). When administered via inhalation, however, benzene induced a marginal increase in the incidence of hematopoietic neoplasms in male C57B1 mice, but no increases in any tumors in male AKR or CD-1 mice similarly exposed (Snyder et al. 1981). Additionally, male Sprague-Dawley rats exposed to a similar dosing regime did not develop tumors (Snyder et al. 1981). In another rat experiment by Maltoni et al. (1983), male and female rats developed tumors of the liver and of the Zymbal's gland, but not of the hematopoietic system.

N.8.1.1 Epidemiologic Data in Humans

Case reports and epidemiologic studies of workers have established a causal relationship between high dose exposure to benzene and acute myeloid leukemia (AML). AML is a fatal condition, and onset is often rapid; it is characterized by diminished production of normal erythrocytes, granulocytes and platelets, which leads to death by anemia, infection or hemorrhage. While some studies have implicated other types of leukemia and possibly lymphoma with exposure to high concentrations of benzene, the evidence is strongest and most consistent for AML and its variants (Goldstein 1988).

A study by Aksoy et al. (1974) reported an increased relative risk of 2 for leukemia for workers exposed to high levels of benzene ranging from 210–640 ppm. Subjects with benzene-induced hyporegenerative anemia or pancytopenia of longstanding duration subsequently developed AML (Vigliani and Forni 1976). A study by Wong (1987) showed that male workers exposed to high levels of benzene (≥ 720 ppm-months) had an excess of lymphopoietic cancers (relative risk of 3.2). For the purposes of quantitative risk characterization, this study is flawed by the use of ppm-months as the exposure measure, because there is no distinction with this measure between concentration and duration of exposure.

A cohort study of white male workers occupationally exposed to benzene in two rubber manufacturing facilities (Infante et al. 1977) showed a significant excess of leukemia, either myelogenous or monocytic, yielding 10-fold increase in relative risk from the two types leukemia combined. The average benzene exposure for workers was estimated at 100 ppm. Benzene appeared to be the only major industrial chemical present that is known to be associated with blood disorders; thus, the possibility that leukemia was associated with exposure to other chemicals in the workplace was minimized.

Rinsky et al. (1987) extended the follow up of the cohort members from the Infante et al. 1977) study, and showed that incidences of leukemia, especially multiple myeloma, increased with increasing cumulative exposure to benzene over concentrations ranging from 40–200 ppm, 200–400 ppm, and >400 ppm.

A historical prospective study of mortality was conducted among white male workers occupationally exposed to benzene in a chemical manufacturing facility at time-weighted average (TWA) exposures ranging from 0.1 to 35 ppm (Ott et al. 1978). Although the incidence of myelogenous leukemia was low (three cases), it was statistically higher than the number of cases expected. The authors concluded that the risk for leukemia is elevated at exposures at low concentrations. Another epidemiologic study showed no leukemia deaths at benzene exposures that were less than 1 ppm (Tsai et al. 1983).

N.8.1.2 Experimental Studies in Animals

Despite the difficulty in developing reliable animal models for benzene carcinogenesis, both gavage and inhalation exposure of rodents to benzene have resulted in the development of neoplasia as described in the following section.

Inhalation Exposure

C57B1 mice were exposed via inhalation to 300 ppm benzene for 6 hours/day, 5 days/week for 488 days (Snyder et al. 1981). Slightly increased incidences of hematopoietic neoplasms were reported for male $C57B_1$ mice. There were no increases in tumor incidence in male AKR or CD-1 mice who were exposed on a similar regimen to 100 ppm (both strains of mice) or 100 and 300 ppm (CD-1 mice) (Snyder et al. 1981). Male Sprague-Dawley rats exposed by inhalation to 300 ppm benzene on a similar dosing regime had no elevated levels of neoplasms, as compared with controls (Snyder et al. 1981).

Maltoni et al. (1983) exposed male and female Sprague-Dawley rats via inhalation to 200 ppm benzene for 4 hours/day, 5 days/week for 7 weeks; 200 ppm 7 hours/day, 5 days/week for the following 12 weeks; and 300 ppm, 7 hours/day, 5 days/week for the following 85 weeks. An 8-hour TWA for 5 days/week was calculated to be 241 ppm. Statistically significant increases were observed in the incidence of liver hepatomas and in carcinomas of the Zymbal gland.

Oral Exposure

In an NTP (1986) study, benzene was administered by gavage at doses of 0, 50, 100, or 200 mg/kg-day to F344/N rats and at 0, 25, 50, or 100 mg/kg-day to $B6C3F_1$ mice. Animals were treated 5 days per week for 103 weeks. Statistically significant increases were observed for the following tumor types: Zymbal gland carcinomas in both sexes of both species; oral cavity tumors in rats of both sexes; skin tumors in male rats; lymphomas and lung tumors in male

and female mice; harderian and preputial gland tumors in male mice; and mammary gland and ovarian tumors in female mice. Thus, by gavage, benzene is a multi-species, multi-organ carcinogen in rodents.

Maltoni and Scarnato (1979) and Maltoni et al. (1983) administered benzene by gavage at dose levels of 0, 50, 250, and 500 mg/kg-day to Sprague-Dawley rats over a lifetime. Dose-related increases in the incidence of mammary gland tumors were observed in females; both sexes exhibited increases in the frequency of Zymbal gland carcinomas, oral cavity carcinomas, and leukemias and lymphomas.

Dermal Exposure

Benzene did not induce skin tumors in mice (Bull et al. 1986) when it was applied at a dose rate of 800 mg/kg-day, followed by a 1 μg dose of 12-0-tetradecanoylphorbol-13-acetate, also topically applied, daily for 52 weeks.

Other Routes of Exposure

No data were located on the potential carcinogenicity of benzene administered via other routes of exposure.

N.8.2 Mutagenicity

Benzene is not mutagenic in *in vitro* studies in bacterial (*Salmonella* and yeast) or mammalian (mouse lymphoma cells) bioassays (EPA 1993). When administered *in vivo*, however, benzene induces chromosomal aberrations in bone marrow cells of rabbits (Kissling and Speck 1973), mice (Meyne and Legator 1980), and rats (Anderson and Richardson 1979). Several investigators have also reported positive results for benzene in the mouse micronucleus assay at high doses (ATSDR 1991b). Workers exposed occupationally to high doses of benzene have shown increases in the number of chromosomal aberrations in bone marrow cells and in peripheral lymphocytes (IARC 1982).

N.8.3 Toxicity

N.8.3.1 Acute Toxicity

Human case studies have shown that benzene inhalation exposure is fatal at concentrations of 20,000 ppm for short durations (Flurry 1928). An inhalation LC_{50} value for rats is 13,700 ppm for a 4-hour exposure (Drew and Fouts 1974). Lethality in animals has been ascribed to ventricular fibrillation due to increased release of adrenaline (Nahum and Hoff 1934). Animal lethality data indicate that benzene is of low toxicity following acute oral exposure. The oral LD_{50} for rats ranges from 930–5600 mg/kg (O'Bryan and Ross 1988).

N.8.3.2 Systemic Toxicity

The major systemic effect of high-dose, chronic exposure to benzene is hematotoxicity. Benzene exerts its toxic effects in the bone marrow, producing deficiencies of blood cells such as pancytopenia (significant decreases in all major types of blood cells—erythrocytes, leukocytes and platelets) and aplastic anemia (which can progress to acute nonlymphocytic leukemia). Deficiencies in various types of blood cells lead to other disorders such as hemorrhagic conditions from a lack of platelets, susceptibility to infection from lack of leukocytes, and increased cardiac output from lack of erythrocytes.

Human studies show that inhalation exposure to high concentrations of benzene for a period ranging from several months to several years results in pancytopenia or other deficits in the relative numbers of circulating blood cells, including aplastic anemia (Aksoy et al. 1974, 1976; Aksoy 1980). Tsai et al. (1983) showed that inhaling very low concentrations of benzene (i.e, less than 1 ppm), have no adverse hematological effects. A study by Fishbeck et al. (1978) has shown that slight decreases in red blood cell counts are correlated with occupational exposure (over 24 ppm in the workplace for an average of 9 years employment duration).

Animal studies show that animal responses to benzene exposure are variable and may depend on factors such as species, strain, duration of exposure, and pattern of exposure (e.g., intermittent versus continuous). Benzene induces a range of toxic effects in the hematopoietic system, including stem cell depression in the bone marrow, pancytopenia, and histopathological changes in the bone marrow (ATSDR 1991b). For example, stem cell depression in the bone marrow was noted in mice exposed intermittently to benzene for 2–16 weeks (Cronkite et al. 1989). Prolonged exposure to lower levels had greater hematotoxic effects than exposure to high levels for a shorter period of time. Recovery occurred within a few weeks of cessation of exposure. Lymphopenia at 25 ppm and stem cell depression at 100 ppm in the bone marrow of C57BL/6 mice was noted after 2 weeks of exposure; recovery occurred following cessation of exposure. In another chronic study (Snyder et al. 1980), mice exposed to 100 ppm of benzene intermittently for a lifetime developed bone marrow hyperplasia and pancytopenia.

Several studies have shown similar hematological effects with oral exposure. Mice exposed to ≥ 8 mg/kg-day in drinking water for 4 weeks had decreased numbers of erythrocytes, increased mean corpuscular volumes, and decreased numbers of circulating lymphocytes (Hsieh et al. 1988). Rats dosed via gavage with 50 mg/kg-day benzene for 6 months showed decreased numbers of erythrocytes (Wolf et al. 1956). In a 2-year study, rats and mice exposed via gavage to 25/mg/kg-day of benzene developed leukopenia (NTP 1986).

N.8.3.3 Developmental Toxicity

Relatively high concentrations of benzene may induce fetal growth retardation or an increase in skeletal variants in pregnant mice and rats exposed via inhalation (i.e., delayed ossification, missing sternebrae, extra ribs) (ATSDR 1991b). Levels of maternal exposure ranged from 156 to 500 ppm for mice and 100 to 2200 ppm for rats. Skeletal variants in the pups were usually found only at the higher doses. In another study, rabbits exposed to 313 ppm benzene during gestation had a decrease in maternal weight gain, an increase in the number of resorptions, reduction in fetal weights, and an increase in minor fetal anomalies (Ungvary and Tatrai 1985). It has been suggested that benzene fetotoxicity in animals is a function of maternal toxicity because fetotoxicity (e.g., decreased fetal weight, increased skeletal abnormalities) occurs only at benzene levels that produce a decrease in maternal weight (Tatrai et al. 1980).

N.8.3.4 Reproductive Toxicity

Histopathological changes in ovaries and testes have been observed in experimental animals exposed for 13-39 weeks to high levels of benzene via inhalation (80–6000 ppm) (Ward et al. 1985; Wolf et al. 1956). Continuous exposure of female rats to 210 ppm benzene for 10–15 days before cohabitation with males and for 3 weeks after cohabitation resulted in a complete absence of litters (Gofmeckler 1968). It is not known whether these effects were due to failure to mate, infertility, or early preimplantation losses.

N.8.3.5 Other Systemic Effects

Animal studies, with some supporting human evidence, demonstrate that benzene affects humoral and cellular immunity. Benzene decreases the formation of lymphocytes that produce serum immunoglobins or antibodies (Hsieh et al. 1988). Exposure at 10 ppm and above for 6 days decreased the ability of bone marrow cells to produce mature B-lymphocytes in mice (Rozen et al. 1984). The spleen was also inhibited from forming mature T-lymphocytes at exposure levels of 31 ppm and above. Rats and mice exposed to 300 ppm for 2–13 weeks showed decreased leukocyte counts (Ward et al. 1985).

Benzene at high exposure levels also affects functional immunity, as indicated by depressed responses to infectious agents. Exposure to benzene at concentrations greater than or equal to 30 ppm for 4 days increased the bacterial counts in mice already infected with *Listeria monocytogenes*; the effects did not occur at 10 ppm (Rosenthal and Snyder 1985). Concentrations of 100 or 400 ppm for 5 days/week, for 4–5 weeks suppressed the primary antibody response to tetanus toxin in mice; there was no effect at 50 ppm (Stoner et al. 1981).

The neurotoxicity of benzene has not been well studied in animals. However, in humans, neurological abnormalities have been observed in patients with previous chronic occupational

exposure to benzene (air concentrations reached 210 ppm or higher) (Baslo and Aksoy 1982). The abnormalities included distal nephropathy in patients with pre-existing aplastic anemia.

N.8.4 Toxicokinetics

The toxicokinetics of benzene suggest that the metabolism of benzene is complex, and that toxicity and carcinogenicity may occur only at doses that are high enough to saturate the detoxification pathways (Sabourin et al. 1987). Benzene metabolism follows Michaelis-Menton kinetics *in vivo*, primarily in the liver and to a lesser extent in the bone marrow (Medinksy et al. 1989; Travis et al. 1990). Benzene is metabolized by cytochrome P-450 dependent mixed-function oxidase enzymes, forming a toxic metabolite in the form of the epoxide, benzene oxide. One detoxification pathway is the formation of glutathione conjugates of benzene oxide which are subsequently metabolized to prephenyl mercapturic acid and phenyl mercapturic acid and eliminated via biliary excretion (Sabourin et al. 1988). Benzene oxide can also rearrange nonenzymatically to form phenol. Phenol can also be metabolized to hydroquinone, catechol, and trihydroxybenzene. These three metabolites are excreted in the urine via glucuronide or sulfate conjugation, another major detoxification pathway (Henderson et al. 1989). Other putative toxic metabolites include (i) benzoquinone, resulting from the oxidation of hydroquinone (formed by the oxidation of phenol), and (ii) muconic dialdehyde (also referred to as *trans, trans*-muconaldehyde), resulting from ring opening of either benzene epoxide or a nonreactive metabolic intermediate, benzene glycol, in the presence of NADPH. Muconic dialdehyde is a known hematotoxin (Latriano et al. 1986), and the percent of this metabolite formed *in vivo* increases nonlinearly with increasing dose.

Biotransformation of benzene is essential for benzene-induced bone marrow damage. There is disagreement as to whether benzene is activated in the marrow or activated elsewhere and transported to the marrow. When several of the metabolites of benzene were compared with the parent compound in hematotoxicity studies, the metabolites were less toxic than benzene. Tunek et al. (1981) suggested that perhaps the metabolites tested may conjugate strongly in the liver and possibly other organs, and may not reach the bone marrow in amounts sufficient to produce the expected hematotoxicity.

N.8.5 Toxicity Values

The epidemiologic and experimental data are currently insufficient to develop noncarcinogenic toxicity values for human exposures (EPA 1993). However, human studies show that adverse hematologic effects do not occur at concentrations of 10 ppm or less (Collins et al. 1991; Hancock et al. 1984) in occupationally exposed workers. In animals, adverse hematologic effects begin to appear at 10-100 ppm (e.g., Seidel et al. 1989; Cronkite et al. 1985, 1989).

The EPA (1993b) has developed ingestion and inhalation CPFs for benzene, based primarily on the results of several epidemiologic studies (EPA 1993). For ingestion, the CPF was

estimated as 2.9×10^{-2} (mg/kg-day)$^{-1}$; when applied to drinking water, this CPF is expressed as 8.3×10^{-7} (μg/L)$^{-1}$, assuming human daily water intake of 2 L/day. EPA's inhalation unit risk was estimated as 8.3×10^{-6} (μg/m^3)$^{-1}$, assuming an inhalation rate of 20 m^3/day.

N.9 BENZO(A)ANTHRACENE

Benzo(a)anthracene (BaA) ($C_{18}H_{12}$, MW 228.3, CAS registry number 56-55-3) is a polynuclear aromatic hydrocarbon that exists as solid, colorless plates with a greenish-yellow fluorescence at standard temperature and pressure. It occurs as a by-product of incomplete combustion of organic substances. It is a constituent in mainstream cigarette smoke, exhaust emissions from gasoline engines, charcoal-broiled foods, and crude oils.

N.9.1 Cancer

Benzo(a)anthracene is classified by the EPA in the category B2, probable human carcinogen, based on no human data but sufficient data from animal bioassays.

N.9.1.1 Epidemiologic Data in Humans

There were no reported epidemiologic data in humans assessing the carcinogenicity of BaA, although BaA is a component of mixtures that have been associated with human cancer. These mixtures include coal tar, soots, coke oven emissions, and cigarette smoke (EPA 1994).

N.9.1.2 Experimental Studies in Animals

Inhalation Exposure

No studies have been found that investigated the exposure of BaA by inhalation in experimental animals.

Oral Exposure

A group of male B6AF1/J mice was exposed by gavage to 3 percent solutions BaA in dioctyl ester of sodium sulfosuccinic acid three times per week for 5 weeks (total dosage was approximately 225 mg/mouse) (Klein 1963). On days 437–444 and 547 after treatment, mice were examined for tumor formation. There were increased incidences of pulmonary adenoma and hepatoma in treated animals versus controls at both observation times. The incidence of pulmonary adenoma at 437–444 days was 95 percent in treated animals versus 26 percent in controls, and at day 547 treated animals had an incidence of 95 percent versus 35 percent for controls. For hepatomas at 437–444 days, treated animals had an incidence of 46 percent versus 0 percent in controls, and at day 547, 100 percent hepatomas in treated animals versus 10 percent in controls. In another study, mice (strain and sex not specified) dosed with

multiple gavage of 0.5 mg BaA in mineral oil (17 mg/kg for 8 or 16 treatments at 3–7 day intervals) resulted in forestomach papillomas in 2 out of 27 treated mice and none in controls (EPA 1994).

Dermal Exposure

BaA yielded positive results in tests for complete carcinogenicity and initiating activity in skin painting assays in C3H/He, CAF1, and ICR/Ha mouse strains (EPA 1994). C3H/He mice were painted 3 times weekly with several concentrations (0.002 percent, 0.02 percent, 0.2 percent, or 1 percent) of BaA in toluene or in n-dodecane. Tumors, mostly malignant, formed after 50 weeks off treatment in the three lower concentrations (Bingham and Falk 1969).

Other Exposure Routes

Groups of male and female CD-1 mice received intraperitoneal injections of BaA in DMSO on days 1, 8, and 15 of age (total dosage 638 μg/mouse) (Wislocki et al. 1986). There was a statistically significant increase in the incidence of liver adenomas or carcinomas (31/39 in treated versus 2/28 in controls); however, female mice did not develop liver tumors. There was an increase in pulmonary adenomas or carcinomas in males (not statistically significant), although the incidence in female treated mice was increased significantly (6/32 in treated versus 0/31 in controls).

Subcutaneous injection of BaA in tricaprylin into C57B1 mice produced injection site sarcomas 9 months following treatment. The doses were 0.05, 0.2, 1.0, 5.0, or 10 mg, and the corresponding incidence of tumor formation was 12 percent, 26 percent, 48 percent, 34 percent, and 31 percent, respectively. A statistical analysis was not reported (EPA 1994).

Intramuscular injection of BaA in combination with 1 percent or 3 percent croton oil produced injection site fibrosarcomas and hemangioendotheliomas in Strain A-derived albino mice. Of the mice injected with BaA in 1 percent croton oil, 3/24 developed tumors, and in the 3 percent croton oil administration, 1/26 developed tumors.

N.9.2 Mutagenicity

BaA was mutagenic to *S. Typhimurium*, *Drosophila melangaster*, and mammalian cell *in vitro* in the presence of an exogenous metabolic system. There was some evidence of clastogenic activity as BaA yielded mostly positive results for DNA damage, mutations, chromosomal effects, and cell transformation in a variety of eukaryotic cells (EPA 1994).

N.9.3 Toxicity

No studies were located that investigated the toxicity of BaA in either humans or animals.

N.9.4 Toxicokinetics

No studies have been located on the absorption of BaA in isolation, although BaA undergoes intestinal transport by passive diffusion (Rees et al. 1971). A discussion of the toxicokinetics of PAHs as a class of compounds is presented in Section **A.1.4** above.

BaA is similar to other polynuclear aromatic hydrocarbons that have a "bay-region" structure and is metabolized by the mixed function oxidases to reactive "bay-region" diol epoxides (i.e., the sterically hindered cup-shaped area between carbons 1 and 12 of benzo(a)anthracene). Intermediates of diol epoxide are currently considered to be the ultimate carcinogen for alternant PAHs (Jerina et al. 1980). These diol epoxides are easily converted into carbonium ions, which are alkylating agents. BaA is metabolized to all five of its dihydrodiols and a number of phenolic metabolites and conjugates. The 3,4-dihydrodiol is mutagenic in the presence of rat liver microsomal fraction, and the 3,4-dihydrodiol and 3,4-diol-1,2-epoxide are also highly tumorigenic.

N.9.5 Toxicity Values

As per EPA Region I methodology, the CPF for BaP was used for all carcinogenic PAHs, including BaA (EPA 1994).

N.10 BENZO(A)PYRENE

Benzo(a)pyrene ($C_{20}H_{12}$, MW 252.3, CAS registry number 50-32-8) is the most extensively studied of the PAHs. Benzo(a)pyrene (BaP) is the most toxic PAH to animals and has the highest carcinogenic potency. In its pure physical state, BaP is in the form of pale yellow needles and is virtually insoluble in water. It is sparingly soluble in ethanol and methanol, and soluble in benzene, toluene, and xylene. BaP undergoes photooxidation with indoor sunlight or fluorescent light in organic solvents, and oxidatively reacts with ozone. It readily undergoes nitration and halogenation (Clar 1964), and reacts with nitrous oxide and nitrogen dioxide in the environment to form nitro derivatives (Butler and Crossley 1981). Benzo(a)pyrene is formed by the incomplete combustion of coal, oil, and gas, and is also a constituent of fossil fuels. It has been identified in cigarette smoke, air of restaurants, engine exhaust, motor oils, margarine, butter, roasted coffee, and numerous water bodies.

N.10.1 Cancer

BaP has been classified as a probable human carcinogen (category "B2") by theEPA.

N.10.1.1 Epidemiologic Data

There have been no studies located regarding cancer in humans following inhalation of BaP only. However, epidemiologic studies have demonstrated increased mortality due to lung

cancer in humans exposed via inhalation to coke-oven emissions (Lloyd 1971; Mazumdar et al. 1975; Redmond et al. 1976), roofing-tar emissions (Hammond et al. 1976), and cigarette smoke (McLure and MacMahon 1980), all of which contain BaP. Reports of skin tumors among individuals exposed to mixtures containing BaP have also been documented. The earliest of these is the report by Pott (1775) of scrotal cancer among chimney sweeps. More recently, skin cancer among humans dermally exposed to shale oils has been reported (Purde and Etlin 1980). In addition to BaP, each of these mixtures contains other PAHs including chrysene, benzo(a)anthracene, benzo(b)fluoranthene, and dibenzo(a,h)anthracene, as well as other potentially carcinogenic chemicals, including nitrosamines, coal tar pitch, creosote, and other PAHs. It is impossible to evaluate the contribution of any individual PAH to the total carcinogenicity of these mixtures in human studies because of the complexity of the mixtures and the presence of other carcinogens. Therefore, epidemiologic evidence in humans regarding the potential carcinogenicity of BaP is inadequate.

N.10.1.2 Experimental Studies in Animals

Dietary, gavage, inhalation, intratracheal instillation, dermal, and subcutaneous studies in numerous strains of at least four species of rodents and several primates have been performed with BaP. Repeated BaP administration has been associated with increased incidences of total tumors and of tumors at the site of exposure. Distant site tumors have also been observed after BaP administration by various routes. BaP is frequently used as a positive control in animal carcinogenicity bioassays. These studies are described below.

Inhalation Exposure

In a chronic inhalation study, hamsters were exposed to 9.5 mg/m^3 and 46.5 mg/m^3 of inhaled BaP for 109 weeks (Thyssen et al. 1981). Approximately 99 percent of BaP particles were between 0.2 and 0.54 microns in diameter (i.e., small enough to deposit deeply in the lung). Respiratory tract tumors were induced in the nasal cavity, pharynx, larynx, and trachea in a dose-related manner. However, no lung tumors were observed. Papillary polyps and squamous cell papillomas and carcinomas were also induced in the esophagus and forestomach of animals in the high dose group, presumably as a consequence of mucociliary particle clearance and swallowing of particles.

BaP administered via inhalation at a dose of 10 mg/m^3 to rats exposed simultaneously to sulfur dioxide (Laskin et al. 1970) increased the incidence of squamous cell lung carcinomas as compared with the incidence observed when BaP was administered alone. Sulfur dioxide, by itself, is not known to be carcinogenic (NRC 1978). This study indicates that carcinogenicity resulting from high doses of BaP can be enhanced with concurrent inhalation exposure to other environmental gases.

Oral Exposure

BaP administered in the diet or by gavage to mice, rats, and hamsters has produced an increased incidence of stomach tumors. In a study by Neal and Rigdon (1967), BaP was administered to mice in the diet at the following ppm concentrations: 0, 1, 10, 20, 30, 40, 45, 50, 100 and 250. At the three highest doses, statistically significant, dose-related forestomach tumors were produced. Brune et al. (1981) administered 0.15 mg/kg (body weight) of BaP in the diet to Sprague-Dawley rats either every 9th day or 5 times/week. These treatments resulted in annual average doses of 6 or 39 mg/kg, respectively. Combined incidences of tumors of the forestomach, esophagus, and larynx showed a statistically significant increase that was dose-related. As part of the same study, Brune et al. (1981) administered 0.15 mg/kg of BaP to groups of Sprague-Dawley rats via caffeine gavage at the following dose rates: every 9th day, every 3rd day, or 5 times per week. These treatments resulted in annual average doses of 6, 18, or 38 mg/kg, respectively. A high level of mortality occurred in the high dose group. There was a statistically significant association between dose and the proportions of rats with combined tumors of the forestomach, esophagus, and larynx.

A statistically significant increase in mammary tumors has also been observed following eight weekly oral doses of 12.5 mg/kg BaP, administered to female rats for 90 weeks (McCormick 1981).

Dermal Exposure

Topical application of BaP was first reported in 1933 to induce skin tumors in mice (Cook et al. 1933). Studies by Wynder and Hoffman (1959a) and Wynder and Ritz (1957) have shown that mice receiving 0.001-0.01 percent of BaP applied dermally to their shaved backs throughout their lifetime exhibited a dose-related increase in squamous cell papillomas and carcinomas. Other studies have supported the finding that dermal application of BaP increases the incidences of both benign and malignant skin tumors: mice treated topically throughout their life span with doses of BaP ranging from 2 to 12.5 μg/day developed increased incidences of squamous cell papillomas and carcinomas (Habs et al. 1984; Warshawsky and Barkley 1987).

BaP is commonly used as a positive control in many dermal application bioassays and has been shown to cause skin tumors in other mammalian species, including rats, rabbits, and guinea pigs (EPA 1993). Some studies have also reported an increase in the incidence of tumors distant from the site of topical application (EPA 1991a). Since a single dose of BaP was administered in many of these studies (EPA 1993b), these data are not suitable for dose-response quantification.

Dermally administered toluene markedly inhibits skin tumorigenesis in mice when BaP is applied topically, followed by application of phorbol-12-myristate-13-acetate (PMA) as a tumor promoter (Weiss et al. 1986). The authors hypothesized that the inhibitory action of

toluene was related to suppression of PMA activity via competition for a PMA receptor site, or via interference with biochemical or morphological processes within the cell and cell membrane.

Other Exposure Routes

Intratracheal instillation in guinea pigs, hamsters, and rats has resulted in elevated incidences of respiratory tract tumors (EPA 1991a). Intraperitoneal BaP injections have caused increases in the number of injection site tumors in rats and mice (EPA 1991a). Subcutaneous BaP injections have caused increases in the number of injection site tumors in mice, rats, guinea pigs, hamsters, and some primates (IARC 1983; EPA 1991a). BaP has also been reported to be carcinogenic in animals when administered by the following routes: intravenously; by implantation in the stomach, lung, kidney or brain; and transplacentally, following intraperitoneal injection of pregnant rats (EPA 1993b).

N.10.2 Mutagenicity

BaP is mutagenic in the Ames assay and in prokaryote and mammalian cell culture tests for DNA damage (EPA 1991a). Genotoxic effects have also been observed when BaP has been tested for chromosomal damage (e.g., sister chromatid exchange and chromosomal aberration) and cell transformation (IARC 1983).

N.10.3 Toxicity

N.10.3.1 Systemic Effects

General systemic toxicity effects resulting from administration of high doses of BaP to animals are typically mild (ATSDR 1990). Most of these effects involve changes in enzyme levels and/or organ weights. In rats, acute intragastric administration of 150 mg/kg-day of BaP resulted in suppressed carboxylesterase activity in the intestinal mucosa (Nousiainen et al. 1984). Following a diet containing 2-acetylaminofluorene and carbon tetrachloride, a single intragastric BaP administration of 200 mg/kg to partially hepatectomized rats induced preneoplastic hepatocyte foci, also known as gamma glutamyl transpeptidase foci, in the liver (Tsuda and Farber 1980). BaP was the most potent foci inducer among several PAHs tested. Rats intragastrically administered 100 mg/kg-day of BaP for 4 days exhibited induction of cytosolic aldehyde dehydrogenase, a liver enzyme (Torronen et al. 1981). BaP also induced carboxylesterase activity in the liver (Nousiainen et al. 1984). In another study, partially hepatectomized rats fed a diet containing 51.4 mg/kg-day of BaP showed statistically significant increases in the extent of liver regeneration, which is indicative of the ability to induce a proliferative cell response (Gershbein 1975). In the kidney, microsomal carboxylesterase activity of rats was moderately induced by 50–150 mg/kg of BaP administered intragastrically (Nousiainen et al. 1984).

N.10.3.2 Developmental Effects

Two studies have demonstrated developmental effects of BaP exposure on inbred rats and mice. In a study by MacKenzie and Angevine (1981), BaP was administered by gavage to pregnant mice at doses of 10, 40, and 160 mg/kg-day. Mean pup weight was significantly reduced in all treatment groups and the viability of litters at parturition was significantly decreased in the highest dose group. When these pups (F_1 progeny) were bred with untreated animals, the F_1 animals exposed *in utero* to the two highest doses were sterile, while the F_1 progeny from the low dose maternal exposure group showed decreased fertility with associated alterations in gonadal morphology and germ-cell development. In another study by Shevaleva (1978), decreased maternal weight gain and hematological changes were reported in pregnant rats administered BaP daily during gestation. Additional effects included: dose-related increases in pre- and post-implantation losses; decreased fetal survival; and reduced fetal weights. Hydronephrosis and bladder dilation were reported in fetuses at all dose levels. A study by Rigdon and Neal (1965) reported no adverse developmental effects when BaP was administered in the diet to mice at concentrations equivalent to 33.3, 66.7, or 133.3 mg/kg-day at varying times before and after mating. This study, however, is difficult to evaluate because BaP administration protocols were inconsistent, and thus maternal doses varied within treatment groups.

N.10.3.3 Reproductive Effects

Two studies in mice (MacKenzie and Angevine 1981; Rigdon and Neal 1965) and one in rats (Rigdon and Rennels 1964) demonstrated that BaP administration at high doses induced reproductive toxicity in rodents. As discussed in the previous section on developmental toxicity, BaP administered by gavage to pregnant CD-1 mice decreased the percentage of females who successfully completed their pregnancies and produced a high incidence of sterility in the progeny (MacKenzie and Angevine 1981). In contrast to these findings, BaP administered in the diet to pregnant Swiss mice caused no adverse effects on fertility (Rigdon and Neal 1965), but reduced the incidence of pregnancy in rats (Rigdon and Rennels 1964).

N.10.3.4 Other Systemic Effects

BaP is immunogenic when applied dermally to the skin of C3H mice. In a study by Klemme et al. (1987), acute topical application of 120 μg BaP elicited an allergic contact hypersensitivity which was antigen-specific.

N.10.4 Toxicokinetics

Although little data are available regarding the absorption of PAHs, including BaP, in humans following inhalation exposure, absorption of PAHs can be inferred from the presence of urinary metabolites of PAHs in workers occupationally exposed to these compounds (Becher and Bjorseth 1983). Experimental data from a skin penetration and metabolism study of

topically applied BaP to skin samples from six mammalian species, including humans, showed that metabolic viability was a major factor involved in the *in vitro* skin permeation (Kao et al. 1985). The extent of skin permeation after 24 hours was established as 3 percent of an applied dose of BaP (10 $\mu g/cm^2$). Results from the Kao et al. (1985) study show that diffusion and metabolism are also involved in the percutaneous fate of surface-applied BaP; permeation was accompanied by extensive "first-pass" metabolism. The high occupational concentration of PAHs, however, did not correspond to the amount of PAHs deposited, metabolized, and excreted in this study. The authors suggest that PAHs adsorbed to airborne particulate matter may not be bioavailable and that the dose-uptake relationship may not be linear over the entire PAH concentration range. Indirect evidence also suggests that BaP may not be readily absorbed following ingestion in humans (Hecht et al. 1979), but is readily absorbed following oral administration in the rat (Yamazaki et al. 1987). Intestinal absorption of PAHs appears to be highly dependent on the presence of bile in the stomach (Rahman et al. 1986). Application of 2 percent crude coal tar to the skin of humans for 8-hour periods on 2 consecutive days showed evidence of absorption of pyrene as well as other non-carcinogenic PAHs (Storer et al. 1984).

The lipophilicity of PAHs enables them to readily penetrate cellular membranes and remain in the body indefinitely; however, the metabolism of PAHs alters these chemical compounds both structurally and chemically, and renders them more water-soluble, and, hence more excretable. Metabolism of PAHs occurs in all tissues. PAHs are biotransformed to chemically reactive intermediates that covalently bind to cellular macromolecules (i.e., DNA), leading to possible mutation and tumor initiation. Metabolites of PAHs include epoxide intermediates, dihydrodiols, phenols, quinones, and their various combinations. The "bay-region" (i.e., the sterically hindered cup-shaped area between carbons 10 and 11 of BaP) intermediates of diol epoxides are currently considered to be the ultimate carcinogen for alternant PAHs (Jerina et al. 1980). These diol epoxides are easily converted into carbonium ions, which are alkylating agents.

BaP is metabolized by the mixed function oxidase system, which includes microsomal cytochrome P-450 enzymes, to several arene oxides. Arene oxides may nonenzymatically rearrange to phenol, undergo hydration to trans-dihydrodiols in a reaction catalyzed by microsomal epoxide hydrolase, or react covalently with glutathione (GSH) spontaneously or in a reaction catalyzed by cytosolic GSH-S-transferase. Phenols may also be formed via P-450 enzymes by direct oxygen insertion, although the mechanism has not been unequivocally proven. 6-Hydroxybenzo(a)pyrene (6-HO-BaP) is further oxidized either spontaneously or metabolically by the enzyme prostaglandin endoperoxide synthetase to the 1,6-, 3,6-, or 6,12-quinones (Panthanickal and Marnett 1981). There is evidence of further oxidation of two additional phenols, 3-HO-BaP to 3,6-quinone and 9-HO-BaP to the K-region 4,5-oxide. The phenols, quinones, and dihydrodiols are then conjugated to more water-soluble GSH conjugates and glucuronides and sulfate esters.

The dihydrodiols can undergo further oxidation, as opposed to conjugation. Cytochrome P-450 further oxidizes the 4,5-dihydrodiol to several uncharacterized metabolites and the 9,10-dihydrodiol to its 1- and/or 3-phenol derivative, with minor formation of 9,10-dihydrodiol-7,8-epoxide. The BaP-7,8-dihydrodiol is metabolized to a 7,8-dihydrodiol-9,10-epoxide, which is presently considered to be an ultimate carcinogenic metabolite, and a minor amount of phenol-diol formation. The diol epoxides can be conjugated with either GSH spontaneously or via GSH-S-transferase enzymatic reaction. Diol epoxides can also hydrolyze spontaneously to tetraols.

The metabolism of BaP has been demonstrated in *in vitro* studies using human bronchial epithelial and lung tissue (Autrup et al. 1978; Cohen et al. 1976; Kiefer et al. 1988) and human hepatocytes (Diamond et al. 1980; Monteith et al. 1987), and numerous *in vivo* animal studies (Bassett et al. 1988; Dahl et al. 1985; Bond et al. 1988; Fiume et al. 1983). The route by which PAHs enter the body may effect their metabolism and excretion. Inhalation of PAHs may bypass the first-pass effect of the liver that is seen after oral exposures. Enzyme activity among tissues are variable and may subsequently alter the degree of bioavailability of the PAHs. Specific enzymes, induced by exposure to BaP, are believed to be responsible for the metabolism of BaP and other PAHs (e.g., aryl hydrocarbon hydroxylase). While some enzymatic activities are enhanced, other pathways may be suppressed (Jacob et al. 1983). For a review of BaP metabolism, see DePierre and Ernster (1978) and Pelkonen and Nebert (1982).

No studies have been found on the excretion of PAHs following inhalation, oral, or dermal exposure. Studies on the excretion of BaP in animals, however, have been characterized. The excretion of BaP in a mouse following a single intratracheal instillation of tritiated BaP (i.e., [^{3}H]-BaP) cleared rapidly with a half life ($T_{1/2}$) of approximately 8 hours. After 24 hours, about 85 percent of the dosed BaP was cleared form the lung (Schnizlein et al. 1987). Rats also exhibited rapid clearance of BaP from inhalation, with 40 percent cleared within 5 minutes and >94 percent of the dose eliminated from the lung after 6 hours after exposure (Weyand and Bevan 1988). A large fraction of administered BaP after intratracheal instillation was excreted in the bile (Weyand and Bevan 1986, 1988), and the rate of BaP excretion into bile declined as the dose increased in rats and guinea pigs. Metabolites excreted in the bile included thioether conjugates (62.5 percent), glucuronide conjugates (22.8 percent), sulfate conjugates (7.4 percent), and free BaP (9.8 percent) (Weyand and Bevan 1988). Intravenous administration of 0.001 mg/kg BaP fit a triexponential model, similar to inhalation exposure (i.e., intratracheal instillation), with $T_{1/2}$s of 1.5, 22.4, and 178 minutes (Weyand and Bevan 1986).

N.10.5 Toxicity Values

Carcinogenic PAHs appear to exert their effects mainly at the point of contact (dermal application results in skin tumors), or portal of entry (ingestion results mainly in forestomach

tumors; inhalation results in respiratory tract tumors and tumors of the upper digestive tract—presumably due to mucociliary particle clearance and involuntary ingestion of particles). Tumors distant from the point of application have also been observed.

Among the PAHs, seven have the ability to elicit cancer: benzo(a)pyrene, benzo(a)anthracene, benzo(b)fluoranthene, benzo(k)fluoranthene, dibenzo(a,h,)anthracene, indeno(1,2,3-cd)pyrene, and chrysene. BaP is the most potent carcinogenic among the PAHs.

For ingestion and skin contact of BaP, a cancer potency factor (CPF) of 7.3 $(mg/kg\text{-}day)^{-1}$ has been promulgated by EPA (1993b). This CPF is the geometric mean of several slopes (ranging from 4.5 to 11.7 $[mg/kg\text{-}day]^{-1}$) from the studies of Neal and Rigdon (1967) and of Brune et al. (1981).

Few studies have evaluated the carcinogenic effects of inhalation exposure to BaP or other PAHs. Rats exposed chronically to combustion gases of a coal-burning furnace enriched with BaP developed lung tumors; however, these gases contained other PAHs, as well as other potentially carcinogenic compounds, so that a direct association between BaP exposure and lung tumors cannot be made (Heinrich et al. 1986).

For each of the other six carcinogenic PAHs, no adequate human or animal data exist to directly estimate a CPF. EPA Region I methodology involves the utilization of BaP's CPF for the other carcinogenic PAHs, along with a conversion of the measured concentrations of each carcinogenic PAH to an "equivalent" concentration of benzo(a)pyrene, according to the following table (EPA 1994):

Compound	Relative Potency Value
Benzo(a)anthracene	0.1
Benzo(b)fluoranthene	0.1
Benzo(k)fluoranthene	0.01
Benzo(a)pyrene	1.0
Chrysene	0.001
Dibenzo(a,h)anthracene	1.0
Indeno(1,2,3-cd)pyrene	0.1

N.11 BENZO(B)FLUORANTHENE

Benzo(b)fluoranthene ($C_{20}H_{12}$, MW 252.3, CAS registry number 205-99-2) is a polynuclear aromatic hydrocarbon that exists in pure form as colorless needles. Benzo(b)fluoranthene

(BbF) is virtually insoluble in water, and slightly soluble in organic media. BbF occurs in fossil fuels, and is formed by the incomplete combustion of fossil fuels. It has also been identified in cigarette smoke, engine exhaust, broiled and smoked food, edible oils and margarines, and various water bodies.

N.11.1 Cancer

The carcinogenicity of BbF has not been classified by the EPA.

N.11.1.1 Epidemiologic Data

Epidemiologic studies have demonstrated increased mortality due to lung cancer in humans exposed via inhalation to coke-oven emissions (Lloyd 1971; Mazumdar et al. 1975; Redmond et al. 1976), roofing-tar emissions (Hammond et al. 1976), and cigarette smoke (McLure and MacMahon 1980). Reports of skin tumors among individuals exposed to mixtures containing BbF have been documented. The earliest of these is the report by Pott (1775) of scrotal cancer among chimney sweeps. More recently, skin cancer among humans dermally exposed to shale oils has been reported (Purde and Etlin 1980). Each of these mixtures contains a number of PAHs, including benzo(a)pyrene, benzo(b)fluoranthene, chrysene, benzo(a)anthracene, benzo(k)fluoranthene, and dibenzo(a,h)anthracene, as well as other potentially carcinogenic PAHs and other potentially carcinogenic chemicals, including nitrosamines, coal tar pitch, and creosote. It is impossible to evaluate the contribution of any individual PAH to the total carcinogenicity of these mixtures in humans because of the complexity of the mixtures and the presence of other carcinogens. Therefore, epidemiologic evidence in humans regarding the potential carcinogenicity of BbF is inadequate.

N.11.1.2 Experimental Studies in Animals

Inhalation Exposure

No studies were located that investigated the potential carcinogenicity of BbF via inhalation exposure.

Oral Exposure

No studies were located that investigated the potential carcinogenicity of BbF via oral exposure.

Dermal Exposure

A dose-response relationship for the dermal carcinogenicity of BbF has been demonstrated over an order-of-magnitude dose range in Swiss mice receiving daily topical doses throughout their lifetime (Wynder and Hoffmann 1959b). Survival was also dose-dependent. The time-to-tumor latency was short, with skin papillomas and carcinomas appearing in high dose groups after 5 months of treatment.

Other Exposure Routes

No studies were located that investigated the potential carcinogenicity of BbF via other exposure routes.

N.11.2 Mutagenicity

A single topical application of 100 μg BbF was reported to bind to DNA in mouse skin (Weyand et al. 1987). The relative extent of binding for carcinogenic PAHs was benzo(b)fluoranthene > benzo(k)fluoranthene > indeno(1,2,3-cd)pyrene (Weyand et al. 1987), which corresponds to the relative cancer potency of these PAHs.

N.11.3 Toxicity

No animal studies were located that assessed the systemic, developmental, reproductive or other toxicity of BbF.

N.11.4 Toxicokinetics

PAHs have been divided into two groups, based on structural similarity and likely metabolic/detoxification pathways. These two groups have been termed "alternant" and "non-alternant" and differ in the electron density associated with the molecule. Alternant PAHs have an equally distributed electron density, whereas non-alternant PAHs have an uneven distribution of electron density from one portion of the molecule to the other and behave almost as if they were two different molecules. Structurally, alternant PAHs consist of multiple 6-membered rings, whereas non-alternant PAHs consist of several 6-membered rings, and one 5-membered ring to which many of the 6-membered rings are attached. It is the 5-membered ring that contributes substantially to the uneven distribution of electron density. Generally, alternant PAHs are more potent than non-alternant PAHs (ATSDR 1990), and the mechanisms of carcinogenicity appear to be different between the two groups. BbF is a non-alternant PAH.

The mechanism of carcinogenicity of non-alternant PAHs is unclear, because non-alternant PAHs either do not have a bay region or have been shown not to be activated via a bay-region epoxide, as are alternant PAHs (Amin et al. 1985a, 1985b). Studies of BbF metabolism

indicate the major metabolites of this non-alternant PAH are 6-hydroxybenzo(b)fluoranthene and 4- or 7-hydroxybenzo(b)fluoranthene; the predominant diol formed was trans-11,12-dihydro-11,12-dihydroxybenzo(b)-fluoranthene (Amin et al. 1982, 1985b). There was no evidence to suggest that a diol epoxide is the ultimate carcinogenic metabolite of non-alternant PAHs. If non-alternants differ in their mechanism of action, then they may also differ with regard to other factors, including target organ and species sensitivity.

N.11.5 Toxicity Values

As per EPA Region I methodology, the CPF for BaP was used for all carcinogenic PAHs, including BbF (EPA 1994).

N.12 BENZO(K)FLUORANTHENE

Benzo(k)fluoranthene (BkF) ($C_{20}H_{12}$, MW 252.3, CAS registry number 2077-08-9) is a polynuclear aromatic hydrocarbon that in pure form exists as pale-yellow needles. Benzo(k)fluoranthene is virtually insoluble in water, but soluble in organic solvents such as benzene. There is no commercial production or known use of BkF, but it occurs ubiquitously as a product of incomplete combustion (as in MPG wastes), in fossil fuels, and in cigarette smoke (IARC 1983).

N.12.1 Cancer

BkF is classified byEPA as a probable human carcinogen (category "B2") based on no human data and sufficient animal bioassays.

N.12.1.1 Epidemiologic Data in Humans

There were no epidemiologic data reported in humans for exposure to BkF specifically, although BkF is a component of mixtures that have been associated with human cancer (EPA 1994). These mixtures include coal tar, soots, coke oven emissions, and cigarette smoke.

N.12.1.2 Experimental Studies in Animals

Inhalation Exposure

No studies have been found that investigated the exposure of BkF by inhalation in experimental animals.

Oral Exposure

No studies have been found that investigated the exposure of BkF by ingestion in experimental animals.

Dermal Exposure

BkF was tested for carcinogenic initiating activity in several mouse skin-painting assays (EPA 1994). A single dermal application of 11 mg BkF to 20 Swiss mice followed by promoting treatments with croton resin for 63 weeks resulted in papillomas (18/20) and carcinomas (5/20). In another study, LaVoie et al. (1982a) applied doses of 0, 30, 100, or 1000 μg BkF (10 doses each, every other day) in 0.1 mL acetone to the skin of Crl:CD-1 (ICR)Br outbred albino mice (20/group). BkF initiation was followed by treatment of promoting agent 12-*O*-tetradecanoyl phorbol-13-acetate (TPA) at a dose of 2.5 μg (3 times/week for 20 weeks) following ten days. There were dose-related increases in the incidence of animals bearing tumors (primarily squamous-cell papillomas and some keratoacanthomas) (0 percent, 5 percent, 25 percent, and 75 percent for doses of 0, 30, 100, or 1000 μg BkF, respectively), as well as the number of tumors per animal (0, 0.1, 0.4, and 2.8, respectively).

Other Exposure Routes

Female Osborne-Mendel rats (27–35/group) received lung implants of 0.16, 0.83, or 4.15 mg (0.65, 3.4, or 17 mg/kg) BkF (purity, 99.5 percent) in 0.05 mL of a mixture of beeswax and trioctanoin with controls receiving nothing or an implant of the beeswax/trioctanoin mixture (Deutsch-Wenzel et al. 1983). The incidences of epidermoid carcinomas in the lung and thorax combined showed a statistically significant dose-related increase. The observed incidences were 0 percent (0/35) for controls, 0 percent (0/35) for vehicle controls, 0 percent (0/35) for low doses, 10 percent (3/31) for middle doses, and 44 percent (12/27) for the highest dose group.

Male and female newborn CD-1 mice received intraperitoneal injections of BkF in dimethyl sulfoxide (DMSO) on days 1, 8, and 15 after birth for a total dosage of 126 μg/mouse (LaVoie et al. 1987). The mice were sacrificed at 52 weeks and examined for tumor formation. The incidence of hepatic adenomas and hepatomas was increased in treated male mice (not statistically significant), but not in females. There were lung adenomas reported for one treated male, some in females (3/18), and none in controls.

N.12.2 Mutagenicity

BkF was mutagenic to *S. Typimurium* (reverse mutation assay) in the presence of an exogenous metabolic activating system (EPA 1994).

N.12.3 Toxicity

No studies have been found that investigated the toxicity of BkF in either humans or animals.

N.12.4 Toxicokinetics

BkF is readily absorbed from the gastrointestinal tract and lung (EPA 1987a). For a detailed discussion of PAHs as a class of compounds, see Sections **A.1.4** and above. BkF is metabolized by the mixed function oxidases to a reactive species, 8,9-dihydrodiol metabolite, in mice (LaVoie et al. 1980). This species was reported to yield positive mutagenic response in bacterial test systems.

N.12.5 Toxicity Values

As per EPA Region I methodology, the CPF for BaP was used for all carcinogenic PAHs, including BkF (EPA 1994).

N.13 BENZO(G,H,I)PERYLENE

Benzo(g,h,i)perylene ($C_{22}H_{12}$, MW 276.3, CAS registry number 191-24-2) is a polynuclear aromatic hydrocarbon that exists as solid, large, pale yellow-green plates (recrystallized from xylene). There is no commercial production or known use of benzo(g,h,i)perylene (BghiP), although it occurs ubiquitously in products of incomplete combustion such as in MPG wastes. It is also found in coal tar and in exhaust emissions from gasoline engines (IARC 1983).

N.13.1 Cancer

BghiP is not classified byEPA as a human carcinogen (category "D") based on data and inadequate animal data.

N.13.1.1 Epidemiologic Data in Humans

No studies have been located on the carcinogenicity of BghiP in humans.

N.13.1.2 Experimental Studies in Animals

Inhalation Exposure

No studies have been found that investigated the exposure of BghiP by inhalation in experimental animals.

Oral Exposure

No studies have been found that investigated the exposure of BghiP by ingestion in experimental animals.

Dermal Exposure

Swiss albino mice received dermal applications of 0.1 or 0.05 percent BghiP 3 times per week for 1 year (Hoffmann and Wynder 1966). The mice were observed for an additional 3 months and then sacrificed. No tumors were reported in the low dose group and one papilloma was observed in the high dose group. In the same study, the tumor initiating activity of BghiP was examined. Ten applications of 0.1 percent BghiP were given over a 2-day period, followed by no treatment for 28 days, and then 2.5 percent croton oil application 3 times/week for the remainder of the year. Two animals (n = 27) developed papillomas, with no statistical analysis reported.

In another experiment, Muller (1968) treated NMRI mice with dermal applications of various concentrations of BghiP 2 or 3 times/week. No skin papillomas or carcinomas developed after 675 days, and survival was similar among all groups. Both benign and malignant tumors developed at distant sites (EPA 1993).

Other Exposure Routes

In a lifetime implant study, female adult Osborne-Mendel rats received lung implants of BghiP in 0.05 mL of a 1:1 (v/v) mixture of beeswax and trioctanoin at doses of 0.65, 3.4, or 17 mg/kg (Deutsch-Wenzel et al. 1983). There were no tumors (epidermoid carcinomas in the lung and thorax) in the untreated controls, vehicle controls, and low dose groups; however, 1 out of 35 (3 percent) from the mid dose group, and 4 out of 34 (12 percent) from the high dose group had increased incidence of tumors. These were not statistically significant, and distant tumors were not observed.

Female NMRI mice (3 groups of 50) received subcutaneous injections of 0, 0.83, or 16.7 mg BghiP suspended in 0.15 mL 10 percent aqueous gelatin 1 time every 2 weeks for 6 months and sacrificed 675 days after the first injection. No tumors were found at the site of injection in any animal, but tumors at other sites in controls and treated animals were found. Also, groups of female mice were given doses of 0, 0.1, 1, or 10 mg BghiP suspended in 0.15 mL 10 percent aqueous gelatin by subcutaneous injection once every two weeks for 20 weeks. Again, no skin or subcutaneous tumors were detected at site of injection, and few tumors were found elsewhere.

N.13.2 Mutagenicity

BghiP is readily absorbed from the gastrointestinal tract and lung (EPA 1987b). For a detailed discussion of PAHs as a class of compounds, see Sections **A.1.4** and **A.10.4** above.

N.13.3 Toxicity

No studies were located that examined the toxicity of BghiP in either humans or animals. The toxicity of pyrene is considered representative of the toxicity of BghiP in this risk assessment (see **Pyrene** below).

N.13.4 Toxicokinetics

No studies have been found that investigated the toxicokinetics of BghiP alone. For a detailed discussion of the toxicokinetics of PAHs as a class of compounds, see Sections **A.1.4** and **A.10.4** above.

N.13.5 Toxicity Values

No sufficient data are available to derive an oral or inhalation reference dose or concentration for benzo(g,h,i)perylene. The chronic R_fD of 0.03 mg/kg-day derived for pyrene was used as a surrogate because the toxicity of pyrene was considered to be representative of the toxicity of benzo(g,h,i)perylene.

N.14 BERYLLIUM

Beryllium (Be, CAS Registry Number 7440-41-7) is the first metal of the periodic table of elements that exhibits notable toxicity. In industrial processes, beryllium has been used as a fluorescent-light phosphor, in metal alloys, ceramics, and electronics, and has been used as an aerospace propellant constituent.

N.14.1 Cancer

Beryllium has been classified by the EPA as a probable human carcinogen (Group B2) based on inadequate human evidence but sufficient animal carcinogenicity evidence (EPA, 1993). Beryllium has been shown to induce lung cancer via inhalation in rats and monkeys and to induce osteosarcomas in rabbits via intravenous or intramedullary injection (EPA, 1993).

Additionally, as noted by EPA (1993):

> The solubility and speciation of beryllium in air and water media vary, with ambient air characterized by relatively insoluble beryllium compounds such as beryllium oxide and metallic beryllium, and water characterized by more soluble forms. Carcinogenic potency varies according to the form of beryllium present.

N.14.2 Mutagenicity

As summarized by ATSDR (1987):

> ...The mutagenicity of various beryllium compounds is not clear. Metabolic activation is not an issue for beryllium mutagenicity, but a positive or negative response apparently depends on the type of bacterial strain and the type of assay system that is used. Beryllium sulfate was generally negative in Ames assays. Beryllium sulfate appears to be mutagenic in mammalian cells (Hsie et al., 1979a,b; Miyaki et al., 1979) and induces chromosome aberrations and sister chromatid exchanges in mammalian cells (Larramendy et al., 1981).

N.14.3 Toxicity

Toxic effects resulting from subchronic or chronic oral administration of beryllium to laboratory animals have not been widely studied. Respiratory effects (altered morphology and biochemical parameters) have been observed following administration of beryllium in food to rats (Goel et al., 1980), while the only observed effects of lifetime administration of beryllium in drinking water to rats were changes in body weight gain (Schroeder and Mitchener, 1975a,b). The NOAEL of 5 ppm beryllium in drinking water obtained in this study converts to 0.54 mg beryllium/kg-day under standard exposure calculation assumptions of drinking water ingestion rate and body weight for rats (EPA, 1993). Data on the teratogenicity or reproductive effects of beryllium are limited, but beryllium has been reported to produce embryolethality and terata in chick embryos (Puzanova et al., 1978).

The lung is the primary target organ for beryllium toxicity via inhalation. For both humans and animals, the manifestations of subchronic or chronic beryllium intoxication are similar: lung fibrosis ("chronic berylliosis") and pneumonitis, and some reports of cellular proliferation, macrophage infiltration, and inflammation (ATSDR, 1987). Frank effect levels (FELs) for lung toxicity in a variety of laboratory species were 0.04 mg beryllium/m^3 following subchronic or chronic exposure durations (ATSDR, 1987).

Neither ATSDR (1987) nor EPA (1993) have reviewed, in their toxicological assessments of beryllium, studies relating subchronic or chronic dermal exposure to beryllium with adverse health effects in rodents or humans.

N.14.4 Toxicokinetics

Beryllium is not well absorbed when given by any route, with experimental animals absorbing, at most, 1 percent (Hammond and Beliles, 1985). After inhalation, beryllium is retained in the lungs and mobilized slowly; once in the bloodstream, a colloidal beryllium phosphate is

formed or small amounts of a soluble beryllium-citrate complex may be formed and deposited in the bone or excreted in the urine (Hammond and Beliles, 1985). The colloidal fraction is deposited in the liver, spleen, and bone marrow (Scott and Hodge, 1971).

N.14.5 Metabolism

ATSDR (1987) provides incomplete information derived from EPA (1986) that beryllium and its compounds are not biotransformed, but that soluble beryllium salts are partially converted to more insoluble forms in the lung.

N.14.6 Toxicity Values

EPA has established an oral reference dose (R_fD) for soluble beryllium salts of 0.005 mg ingested per kilogram body weight per day, based on a rat chronic oral bioassay (Schroeder and Mitchner, 1975). This R_fD is based upon the NOAEL obtained from that study (5 ppm in drinking water, converted to 0.54 mg Be/kg-day) and by applying an aggregate uncertainty factor of 100. The uncertainty factor accounts for interspecies extrapolation and for the protection of sensitive humans.

EPA has calculated an oral slope factor (a plausible upper-bound estimate of the probability of a carcinogenic response per unit intake of the chemical over a lifetime) of 4.3 $(mg/kg\text{-}d)^{-1}$. The slope factor calculation was based on the appearance of gross tumors at various sites in Long-Evans male rats administered beryllium in the drinking water (Schroeder and Mitchener, 1975a). As noted by EPA (1993), however:

> The estimate is derived from a study which did not show a significant increase in tumorigenic response. While this study is limited by use of only one non-zero dose group, the occurrence of high mortality and unspecified type and site of the tumors, it was used as the basis of the quantitative estimate because exposure occurred via the most relevant route. Oral risk estimates derived by extrapolation from studies in other species/strains for the intravenous and inhalation routes (also highly uncertain) are within an order of magnitude.

EPA has calculated an inhalation unit-risk concentration (risk per unit concentration of beryllium in the air) of 2.4×10^{-3} $(\mu g/m^3)^{-1}$. The basis for this value lies in data from occupationally-exposed humans, despite recognized insufficiencies in the study (EPA, 1993):

> The estimate of risk for inhalation exposure was based upon an epidemiologic study having several confounding variables. The estimates of exposure levels and duration were also somewhat uncertain. While a quantitative assessment based on several animal studies resulted in a similar estimate of risk (which increases the confidence somewhat), the quality of the available studies was poor (that is, they were conducted at single dose levels or lacked control groups).

N.15 BIS(2-CHLOROETHYL)ETHER

The following toxicity profile was excerpted from TRC 1994:

R_fDs were not found in IRID or HEAST (EPA 1993).

The EPA weight-of-evidecne classification for human carcinogenic potential of this compound is "B2"—probable human carcinogen (EPA 1993). The oral slope factor for this compound has been established as 1.1 $(mg/kg\text{-}day)^{-1}$ (EPA 1993) based on a chronic oral gavage followed by dietary study in mice. Liver tumors were detected in mice given bis(2-chloroethyl)ether for 560 days. An inhalation slope factor of 1.1 $(mg/kg\text{-}day)^{-1}$ was also established based on route-to-route extrapoaltion of the oral data (EPA 1993).

N.16 BIS(2-CHLOROISOPROPYL)ETHER

The following toxicity profile was excerpted from TRC 1994:

No chronic oral or inhalation R_fDs are available for this chemical (EPA 1993). A subchronic oral R_fD of 4×10^{-2} mg/kg-day has been established based on a two year dieatary study in mice (EPA 1993). The critical effect was decreased hemoglobin and the uncertainty factor was 1,000. This subchronic oral R_fD has been cross-assigned to subchronic inhalation. (For the purposes of this risk assessment, the subchronic values have been adopted for chronic values.)

The EPA weight-of-evidence classification for the human carcinogenic potential of this chemical is "C"—possible human carcinogen (EPA 1993). The oral slope factor has been established as 7×10^{-2} $(mg/kg\text{-}day)^{-1}$ (EPA 1993) based on the development of liver and lung tumors in a 2-year gavage study in mice. Based on route-to-route extrapolation of these oral data, an inhalation slope factor of 3.5×10^{-2} $(mg/kg\text{-}day)^{-1}$ has been established. (EPA 1993).

N.17 BUTANONE, 2- (METHYL ETHYL KETONE)

The following toxicity profile was excerpted from TRC 1994:

The chronic oral R_fD for 2-butanone is 0.6 mg/kd-day (EPA 1993) and is based on a multigeneration developmental feeding study in rats. The LOAEL was 3,122 mg/kg-day and the critical effect observed was decreased fetal birth weight. The NOAEL was 1,771 mg/kg-day. An uncertainty factor of 3,000 was applied to the NOAEL to obtain the R_fD. The confidence level in this R_fD is low. The subchronic oral R_fD for 2-butanone is 0.2 mg/kg-day (EPA 1993) and is based on the same feeding study in rats, with an applied safety factor of 1,000. The chronic inhalation R_fD for 2-butanone is 0.29 mg/kd-day (1 mg/m^3) (EPA 1993) and is based on a developmental inhalation study in mice. The LOAEL was 8,906 mg/m^3 and the critical effect was decreased fetal birth weight. The NOAEL was 2,978 mg/m^3. An uncertainty factor of 1,000 and a modifying factor of 3 were

applied to the NOAEL to obtain the R_fD. The confidence level in this R_fD is low. The subchronic inhalation R_fD for 2-butanone is also 0.29 mg/kg-day, based on the study and uncertainty factors cited previously.

The EPA weight-of-evidence classification for the carcinogenicity of 2-butanone is "D"—not classifiable as to human carcinogenicity (EPA 1993).

N.18 CADMIUM

The following toxicity profile is excerpted from TRC 1994:

Ingestion of cadmium results in nausea, vomiting, and abdominal pain. Inhalaiton of cadmium fumes may result in an acute chemical pneumonitis and pulmonary edema (Goyer 1986).

The chronic oral R_fDs for cadmium are 5×10^{-4} mg/kg-day (water) and 1×10^{-3} mg/kg-day (food) (EPA 1993). The critical effects associated with chronic ingestion of cadmium are proteinuria andrenal damage in humans. An uncertainty factor of 10 was applied to the NOAELs (0.005 mg/kg-day for water and 0.01 mg/kg-day for food) in order to determine the R_fDs. The uncertainty factor was used to account for human variability. The confidence level for the R_fDs is high.

The EPA weight-of-evidence of cadmium is "B1"—probable human carcinogen. The inhalationm of cadmium has been shown to produce respiratory tract cancers in humans and various tumoprs in rats and mice following inhalation and injection exposures. Based on the human data, an inhalation slope factor of 6.3 $(\text{mg/kg-day})^{-1}$ $(1.8 \times 10^{-3}\ \mu g/m^3)^{-1}$ has been established (EPA 1993). There are no positive cancer studies of ingested cadmium suitable for quantitation (EPA 1993).

N.19 CARBAZOLE

Carbazole is a semivolatile organic chemical that is an important dye intermediate. Carbazole is used in the manufacture of photographic plates sensitive to ultraviolet light. It is also a reagent for lignin, carbohydrates, and formaldehyde.

No information regarding carbazole toxicity was readily available. The HEAST (1994) tables list an oral slope factor for carbazole of 2×10^{-2} $(\text{mg/kg-day})^{-1}$ for liver tumors seen in a 96-week mouse study. This value has not been reviewed by EPA in establishing toxicity values for this compound; however, for the purposes of this risk assessment, this oral slope factor will be used.

N.20 CHROMIUM

Chromium (*Cr*, MW 52.0, CAS registry number 7440-47-3). Chromium is a metal that is found in varying oxidative states ranging from chromium(-II) to chromium(+VI). Cr^{2+} is the most commonly occurring natural form of the metal. Cr^{6+}, which originates strictly from anthropogenic sources, is of greatest toxicological significance. Chromium is produced from the reduction of chromite ore using carbon. Chromium in various forms is used in the metallurgic industry (alloys including stainless steel), the ceramics industry (granular chromite), and the chemical industry (pigments, plating, leather treatment, wood preservatives).

N.20.1 Cancer

Hexavalent chromium (Cr^{6+}) is classified as a human carcinogen by the EPA (category "A"), based on the demonstration by epidemiologic studies of an increase in the incidence of lung cancer in chromium-exposed workers (EPA 1993c). There are a sufficient number of these studies to establish a dose-response relationship between chromium exposure and human lung cancer. These findings, however, may be confounded by the smoking habits of workers. In calculating the dose-response relationship, it was assumed by both the author of the studies (Mancuso 1975) and EPA (1993c) that the smoking rate among workers was similar to that of white males in the general U.S. population. However, several other epidemiologic studies on the distribution of smoking among human population groups suggest that the smoking rate may be higher among industrial workers than in the general population (EPA 1993c). Chromium workers are exposed to both trivalent and hexavalent chromium; however, only hexavalent chromium has been found to be carcinogenic in animal studies and only hexavalent chromium is considered to be a human carcinogen (EPA 1993c). When assessing carcinogenicity among workers, it has been assumed that the ratio of trivalent to hexavalent chromium is 6:1 (EPA 1993c).

Animal carcinogenicity studies with Cr^{6+} have supported the human evidence of carcinogenicity, producing the following tumors types: intramuscular injection site tumors in rats and mice; intrapleural implant site tumors for various hexavalent compounds in rats; intrabronchial implantation site tumors for various hexavalent compounds in rats; and subcutaneous injection site sarcomas in rats (EPA 1993c).

N.20.2 Mutagenicity

In general, hexavalent chromium is mutagenic in bacterial and yeast assays and in Chinese hamster ovary cells, whereas trivalent chromium is not (EPA 1993c). Chromosomal effects, unscheduled DNA synthesis and transformation of cell lines have been induced by exposure to various chromium compounds (Raffetto et al. 1977; Casto et al. 1979; Levis et al. 1978).

N.20.3 Toxicity

Other than localized pre-neoplastic histopathological changes in the lung, chromium does not appear to induce systemic toxicity. A 1-year drinking-water study in rats (MacKenzie et al. 1958) showed no systemic effects related to chromium exposure. Similarly, no toxicologically significant effects were observed in a 4-year study with dogs (Anwar et al. 1961), or in a group of humans who drank water for 3 years from a private well containing chromium concentrations of 1 mg/L (EPA 1993c).

No studies have been documented examining the possible developmental or reproductive effects resulting from ingestion of chromium.

N.20.4 Toxicokinetics

Absorption of inhaled chromium compounds depends on several factors, including physical and chemical properties of the particles, such as oxidation state, size, and solubility, and the activity of alveolar macrophages (ATSDR 1991c). The identification of chromium in urine and serum of humans occupationally exposed to soluble trivalent or hexavalent compounds in air indicates that chromium can be absorbed from the lungs (Randall and Gibson 1987); hexavalent chromium compounds appear to be more readily absorbed from the lungs than trivalent compounds, due in part to differences in the capacity to penetrate biological membranes. Chromium is also absorbed through the gastrointestinal tract, but at a much lower rate than through the lungs (EPA 1990a). The absorption efficiency depends on the dietary intake (Anderson 1986). Both trivalent and pentavalent chromium can penetrate human skin to some extent (Samitz and Shrager 1966).

Metabolically, trivalent chromium compounds are essential to normal glucose, protein, and fat metabolism (Anderson 1986). In the lung, hexavalent chromium can be reduced to trivalent chromium by ascorbate. This reduction results in a shorter residence time of chromium in the lungs and constitutes the first defense against oxidizing reagents in the lung (Suzuki and Fukuda 1990). When ascorbate is depleted from the lungs, hexavalent chromium can also be reduced by glutathione, although this is a slower process than reduction by ascorbate (Suzuki and Fukuda 1990). Uptake and reduction of chromium compounds by pulmonary macrophages also occurs and appears to constitute a second line of defense against the pulmonary toxicity of hexavalent chromium compounds (Petrilli et al. 1986). The reduction of hexavalent chromium to trivalent chromium in cell extracts made from human pulmonary alveolar macrophages significantly reduces the mutagenic potency of chromium when it is tested in the Ames *Salmonella* assay (Petrilli et al. 1986).

Hexavalent chromium may also be reduced to trivalent chromium by ascorbate in the gastrointestinal tract when exposure is oral (Samitz 1970). Reduction of hexavalent chromium may also result in the formation of pentavalent chromium (ATSDR 1991c). This reaction

involves a one-electron transfer from the microsomal cytochrome P-450 system. Pentavalent chromium complexes are characterized as labile, reactive, and persistent; these characteristics make them likely candidates for interaction with cellular DNA (Jennette 1982).

N.20.5 Toxicity Values

Hexavalent chromium appears to exhibit no significant adverse systemic toxicity via ingestion. A 1-year drinking water study in rats showed no evidence of toxicity over the duration of the study (MacKenzie et al. 1958). The NOAEL for hexavalent chromium in the MacKenzie et al. (1958) study was calculated to be 2.4 mg/kg-day. EPA used an uncertainty factor of 500 (10 for interspecies extrapolation, 10 for intrahuman variability, and 5 for a less than lifetime study), yielding a value of 5 μg/kg-day. This R_fD is limited to hexavalent chromium (metallic) of soluble salts such as potassium dichromate, sodium dichromate, potassium chromate, and sodium chromate.

EPA has no R_fC for hexavalent chromium (EPA 1993c). Epidemiologic studies of occupational inhalation exposure to hexavalent chromium indicate adverse respiratory effects ranging from irritation of the nasal mucosa to perforation of the septum, depending on exposure concentration. A study by Lindberg and Hedenstierna (1983) showed evidence of respiratory effects at occupational exposure levels of 2 $\mu g/m^3$ of hexavalent chromium. No adverse effects were observed at 1 $\mu g/m^3$ (0.14 μg/kg-day).

Although the EPA considers chromium to be a human carcinogen, chromium-exposed workers were exposed to both valence forms of chromium. Trivalent chromium is an essential nutrient (NRC 1989), and only hexavalent chromium seems to have the ability to cause cancer in humans. The ratio of trivalent chromium to hexavalent chromium in occupational environments is considered to be 6:1 (Mancuso 1975). CPFs from various studies range from 0.035 to 0.13 $(\mu g/m^3)^{-1}$ (Langard et al. 1980; Axelsson et al. 1980; Pokrovskaya and Shabynina 1973). These studies assume that the smoking habits of chromate workers are similar to those of the general white male population and, thus, may overestimate risk, because the proportion of smokers is typically higher for industrial workers than for the general population (EPA 1993c). Alternatively, the assumption of a 6:1 ratio between trivalent chromium and hexavalent chromium may underestimate risk, if this ratio is incorrect. Using Mancuso's data, EPA's inhalation unit risk for cancer is 1.2×10^{-2} $(\mu g/m^3)^{-1}$ (= 0.04 $[\mu g/kg\text{-}day]^{-1}$).

N.21 CHRYSENE

Chrysene ($C_{18}H_{12}$, MW 228.3, CAS registry number 218-01-9) is a polynuclear aromatic hydrocarbon that exists as colorless platelets with blue fluorescence. It is virtually insoluble in water, slightly soluble in organic solvents (i.e., acetone, toluene, and hot xylene), and soluble in benzene. There is no commercial production or known use of chrysene. Chrysene occurs

in about the same concentration as BaP in products of incomplete combustion as in MPG wastes. Chrysene, and related structures to chrysene, occur in higher concentrations than most of the other PAHs in fossil fuels such as crude oil and lignite.

N.21.1 Cancer

Chrysene is classified by the EPA as a probable human carcinogen (category "B2"), based on no human data and sufficient data from animal bioassays.

N.21.1.1 Epidemiologic Data in Humans

There are no data reported for humans exposed to chrysene, although chrysene is a component of mixtures (e.g., coal tar, soots, coke oven emissions, and cigarette smoke) that have been associated with human cancer (EPA 1994)

N.21.1.2 Experimental Studies in Animals

Inhalation Exposure

No studies have been found that investigated the exposure of chrysene by inhalation in experimental animals.

Oral Exposure

No studies have been found that investigated the exposure of chrysene by ingestion in experimental animals.

Dermal Exposure

There is sufficient evidence of the carcinogenicity of chrysene by dermal application. Chrysene has been shown to be carcinogenic in Swiss mice dosed with a 1 percent solution of chrysene in acetone 3 times per week for life (Wynder and Hoffmann 1959). At 12 months, 9 out of 20 mice had developed skin papillomas and 8 had developed carcinomas. The initiating activity of chrysene in producing papillomas and carcinomas has been demonstrated in several mouse strains (CD-1, ICR/Ha Swiss, Ha/ICR/Mil Swiss albino, and Sencar) in classic initiation/promotion skin painting assays (Van Duuren et al. 1966; Scribner 1973; Levin et al. 1978; Wood et al. 1979, 1980; Slaga et al. 1980).

Other Exposure Routes

There were two short-term exposure studies that examined the carcinogenic effects of chrysene administered by intraperitoneal injection. In the first study, preweanling male (28–35/group) and female (24–34/group) CD-1 mice were given intraperitoneal injections of chrysene in

dimethyl sulfoxide (DMSO) on days 1, 8, and 15 days after birth for a total dosage of 160 or 640 μg/mouse (Wislocki et al. 1986). Both low and high dose experiments had concurrent vehicle controls. There was a statistically significant increase in the incidence of liver adenomas or carcinomas in treated male mice relative to controls: 29 percent in low-dose males versus 11 percent in controls, and 41 percent in high-dose males versus 7 percent in controls. The majority of adenomas occurred in the low dose group and in some controls; carcinomas occurred in the high dose group and in no controls. The incidence of lung adenomas in high dose males and malignant lymphomas in low dose males was significantly increased relative to controls. There were no tumors observed in females. In a similar study by Buening et al. (1979a), the total dose of chrysene injected into Swiss Webster BLU/Ha (ICR) mice was 320 μg/mouse. The treated mice, killed at 38–42 weeks, had increased percentages of hepatic tumors that were statistically significant in males (25 percent versus 0 percent) and lung tumors in males (21 percent versus 10 percent) that were not statistically significant.

N.21.2 Mutagenicity

Chrysene tested positive for mutagenicity in *S. typimurium* in strains TA100 and TM677 in the presence of an exogenous activating system. Chrysene produced chromosomal effects in chinese hamster bone-marrow cells (2×450 mg/kg), mouse oocytes (450 mg/kg), and hamster spermatogonia (450 mg/kg), and cell transformation in Syrian hamster embryo cells (10 μg/mL). It did not induce mitotic recombination in yeast, unscheduled DNA synthesis in primary rat hepatocytes, or mutations in Chinese hamster V79 cells.

N.21.3 Toxicity

N.21.3.1 Epidemiologic Studies in Humans

No studies have been located that investigated the toxicity of chrysene in humans.

N.21.3.2 Experimental Studies in Animals

Acute Toxicity

The LD_{50} for the mouse is >320 mg/kg body weight by intraperitoneal injection (Simmon et al. 1979).

Systemic Toxicity

No studies have been found on the systemic toxicity of chrysene in experimental animals.

Developmental/Reproductive Toxicity

Chrysene administered orally at a dose of 60 mg/kg bw to pregnant rats on day 19 of gestation induced P-450 enzyme (i.e., BaP hydroxylase) activity in fetal liver and rat placenta (Welch et al. 1972, 1969). Chrysene applied at a dose of 10 μL to the shell of mallard duck eggs at 72 hours of development resulted in embryotoxicity (Hoffman and Gay 1981).

Other Toxic Effects

No studies have been found that investigated any other toxic effects of chrysene in experimental animals.

N.21.4 Toxicokinetics

The absorption of chrysene has not been studied, although there is information about the absorption of PAHs as a class of compounds discussed in Section **A.1.4** above. The distribution, metabolism, and elimination of PAHs are also discussed. Chrysene expresses its carcinogenic activity through biotransformation by the mixed function oxidase system to chemically reactive intermediates which then covalently bind to cellular macromolecules (i.e., DNA), leading to possible mutation and tumor initiation. Metabolites of chrysene include the 1,2-, 3,4-, and 5,6-dihydrodiols (precursors to diol-epoxides) and some monohydroxy derivatives (Sims 1970). The 1,2-dihydrodiol and the 1,2-diol-3,4-epoxide are mutagenic in bacterial and mammalian cells (Wood et al. 1977, 1979), and the 1,2-dihyrodiol is a tumor initiating agent in mice (Levin et al. 1978; Slaga et al. 1980; Chang et al. 1983). Both 1,2-dihydrodiol and 1,2-diol-3,4-epoxide have induced pulmonary adenomas in newborn mice (Buening et al. 1979a; Chang et al. 1983). DNA adducts formed in hamster embryo cells treated with chrysene appear to arise from reactions of the 1,2-diol-3,4-epoxide with DNA and provide evidence that the metabolic activation of chrysene occurs via the formation of the bay-region diol-epoxide (Hodgson et al. 1982).

The elimination of chrysene and other PAHs has not been studied by any route in humans. The elimination of chrysene has been studied after oral exposure in rats (Chang 1943). There was a dose-response relationship between the dose of chrysene in the diet and the percentage of excreted chrysene in the feces. Approximately 79 percent of the chrysene dose (not specified) was eliminated in the feces. A more detailed discussion of the elimination of PAHs is in Section **A.1.4** above.

N.21. 5 Toxicity Values

As per EPA Region I methodology, the CPF for BaP was used for all carcinogenic PAHs, including chrysene (EPA 1994).

N.22 CHLOROBENZENE

The following toxicity profile was excerpted form TRC1994:

The chronic oral R_fD for chlorobenzene is 2×10^{-2} mg/kg-day (EPA 1993), and is based on a 13-week dog study. Beagle dogs received chlorobenzene orally by capsule at doses of 27.25, 54.5, or 272.5 mg/kg-day for 5 days/week for 13 weeks. The LOAEL was 54.5 mg/kg-day and the critical effects observed were histopathological changes in the liver as well as changes in the blood chemistry. An uncertainty factor of 1,000 was applied to the NOAEL of 19 mg/kg-day to obtain the R_fD. The confidence level in this R_fD is medium. The subchronic oral R_fD has not been established (EPA 1993) and for the purpose of this risk assessment the chronic oral R_fD will be used.

The chronic inhalation R_fD for chlorobenzene is 5×10^{-3} mg/kg-day (EPA 1993) and is based upon a chronic study in rats. Rats were exposed to chlorobenzene at doses of 75 ppm for 7 hours/day, 5 days/week for 120 days. An uncertainty factor of 10,000 was applied to obtain the R_fD. The critical effects observed were liver and kidney effects. The subchronic inhalation $R_fD$is not available (EPA 1993), and for the purpose of this risk assessment, the chronic value will be used.

The EPA weight-of-evidence classification for the carcinogencity of this compound is "D"—not classifiable as to human carcinogenicity (EPA 1993).

N.23 COPPER

Copper (Cu, CAS registry number 7440-50-8) is an ubiquitous, nutritionally-essential trace element required for hemoglobin synthesis and and for varied oxidative enzymes; copper also plays various industrial roles.

N.23.1 Cancer

At present, EPA considers copper to be unclassifiable as a human carcinogen (Class "D"), based on an absence of human carcinogenicity data, inadequate evidence of carcinogenicity in animals, and equivocal mutagenicity data (EPA, 1993).

EPA (1993) summarizes the inadequacy of the animal carcinogenicity data:

> Bionetics Research Labs (1968) studied the carcinogenicity of a copper-containing compound, copper hydroxyquinoline, in two strains of mice (B6C3F1 and B6AKF1). Groups of 18 male and 18 female 7-day-old mice were administered 1,000 mg copper hydroxyquinoline (kg bw)$^{-1}$ (180.6 mg Cu/kg) suspended in 0.5 percent gelatin daily until they were 28 days old, after which they were

administered 2,800 ppm (505.6 ppm Cu) in the feed for 50 additional weeks. No statistically significant increases in tumor incidences were observed in the treated 78-week-old animals.

In the same study, Bionetics Research Labs (1968) administered a single subcutaneous injection of gelatin (control) or 1,000 mg of copper hydroxyquinoline (kg bw)$^{-1}$ (180.6 mg Cu/kg) suspended in 0.5 percent gelatin to groups of 28-day-old mice of both strains. After 50 days of observation, the male B6C3F1 had an increased incidence of reticulum cell sarcomas compared with controls. No tumors were observed in the treated male B6AKF1 mice, and a low incidence of reticulum cell sarcomas was observed in the treated female mice of both strains.

Gilman (1962) administered intramuscular injections containing 20 mg of cupric oxide (16 mg Cu), cupric sulfide (13.3 mg Cu), and cuprous sulfide (16 mg Cu) into the left and right thighs of 2- to 3-month-old Wistar rats. After 20 months of observations, no injection-site tumors were observed in any animals, but other tumors were observed at very low incidence in the animals receiving cupric sulfide (2/30) and cuprous sulfide (1/30). As the relevance of the organic copper compound to the observation of sarcoma induction is uncertain and the incidence of tumors in rats treated *i.m.* with inorganic copper was very low, data are considered inadequate for classification.

N.23.2 Mutagenicity

As summarized by EPA (1993):

> Moriya et al. (1983) reported no increase in mutations in *E. coli* and *S. typhimurium* strains TA98, TA1535, TA1537 and TA1538 incubated with up to 5 mg copper quinolinolate per plate and in *S. typhimurium* TA98 and TA100 incubated with up to 5 mg copper sulfate per plate. Demerec et al. (1951) reported dose-related mutagenic effects in *E. coli* with 2-10 ppm copper sulfate in a reverse mutation assay. Negative results were obtained with copper sulfate or copper chloride in assays using *S. cerevisiae* (Singh, 1983) and *Bacillus subtilis* (Nishioka, 1975, Matsui, 1980, Kanematsu et al., 1980). Errors in DNA synthesis from poly(c)templates have been induced in viruses incubated with copper chloride or copper acetate (Sirover and Loeb, 1976). Chromosomal aberrations were induced in isolated rat hepatocytes when incubated with copper sulfate (Sina et al., 1983). Casto et al. (1979) showed enhanced cell transformation in Syrian hamster embryo cells infected with simian adenovirus with the addition of cuprous sulfide and copper sulfate. High concentrations of copper compounds have been reported to induce mitosis in rat ascites cells and recessive lethals in *Drosophila melanogaster*.

Law (1938) reported increases in the percent lethals observed in *Drosophila* larvae and eggs when exposed to copper by microinjection (0.1 percent copper sulfate) or immersion (concentrated aqueous copper sulfate), respectively.

N.23.3 Toxicity

Because of its role as a nutritionally-essential element, copper is subject to homeostatic mechanisms that attempt to maintain a physiologically-balanced supply of the nutrient. Thus, altered copper status can create problems of both deficiency or excess. Copper deficiency is primarily a topic for nutritionists, and only copper excess (toxicity) will be considered here. An additional consideration is the chemical speciation of the nutrient. Generally, the element must be in a biologically-available form (e.g., a soluble salt) to exert toxic effects; insoluble forms usually preclude any significant absorption into an organism.

As a dietary requirement, oral exposure to copper has been well-studied in animals and humans. Toxic effects can be noted in a variety of organ systems with excess ingestion of copper: cardiovascular, hematological, musculoskeletal, hepatic, renal, neurological, developmental, reproductive, as well as mortality (ATSDR, 1989). In laboratory animals exposed to copper for subchronic or chronic durations, LOAELs and NOAELs for ingested copper typically range from 3 to 150 mg Cu/kg-day (ATSDR, 1989).

Inhalation exposure to copper aerosols or fumes for subchronic or chronic durations have been much less studied. Changes in alveolar type II cells have occurred in rabbits exposed to 0.6 mg Cu/m^3 for 6 hr/day, 5 day/wk, for 4 to 6 weeks (Johansson et al., 1984; Lundborg and Camner, 1984). This value is reported as a NOAEL by ATSDR (1989).

Neither ATSDR (1989) nor EPA (1993) have reviewed, in their toxicological assessments of copper, studies relating subchronic or chronic dermal exposure to copper with adverse health effects in rodents or humans. A few acute effects are, however, reported by ATSDR (1989), including dermal irritation, and hematological and immunological effects.

N.23.4 Toxicokinetics

Although inhalation or dermal absorption of copper can occur, the rates and extent of such absorption is unknown (ATSDR, 1989). Ingested copper is absorbed in the stomach and small intestine; 15-97 percent of an ingested dose may be absorbed (Weber et al., 1969; Strickland et al., 1972). The intestinal mucosa can limit the absorption of ingested copper (Hammond and Beliles, 1980). Once absorbed, copper is bound to serum proteins and distributed throughout the body, under homeostatic control. Excess copper is typically stored in the liver and bone marrow. The bile is the normal excretory pathway and plays a critical role in copper homeostasis (Hammond and Beliles, 1980).

N.23.5 Metabolism

The metabolism of copper consists mainly of its transfer to and from various organic ligands (ATSDR, 1989). In the liver and other tissues, metallothionein typically plays a storage and transport role for copper. As an essential nutrient, copper is incorporated into numerous enzymes responsible for such functions as hemoglobin formation, carbohydrate metabolism, oxidation reduction reactions, and others (ATSDR, 1989). Also as a result of its essentiality, copper concentration in the body is under the control of homeostatic mechanisms that prevent toxicity, typically by decreasing absorption and increasing excretion.

N.23.6 Toxicity Values

The following was excerpted from TRC 1994:

A subchronic and chronic oral R_fD for copper is reported as 1.3 mg/L (3.7×10^{-2} mg/kg-day), which is the current drinking water standard for copper (EPA 1993). This is based on a single dose of 5.3 mg copper which resulted in local gastrointestinal tract irritation in humans. The oral R_fD is not cross-assigned to inhalation since it is based on gastrointestinal irritation.

The EPA weight-of-evidence classification for the carcinogenicity of this compound is "D"—not classifiable as to human carcinogenicity.

N.24 DIBENZO(A,H)ANTHRACENE

Dibenzo(a,h)anthracene (DBA) ($C_{22}H_{14}$, MW 278.4, CAS registry number 53-79-3) is a polynuclear aromatic hydrocarbon described in its pure form as colorless plates or leaflets. It is insoluble in water, slightly soluble in alcohols, but soluble in most organic solvents such as benzene, toluene, and xylene. There is no commercial production or known use of DBA, and it occurs ubiquitously as a product of incomplete combustion, in fossil fuels, cigarette smoke, exhaust emissions from gasoline engines, coal tar, and edible oils.

N.24.1 Cancer

DBA is classified by EPA (1993e) as a probable human carcinogen (category "B2"), based on sufficient data from animal bioassays but no human data.

N.24.1.1 Pidemiologic Data in Humans

There were no studies found that investigated the carcinogenic effect of DBA in humans. DBA is a minor constituent in mixtures such as coal tar, soots, coke oven emissions, and cigarette smoke that have been associated with human cancer (IARC 1984).

N.24.1.2 Experimental Studies in Animals

Inhalation Exposure

No studies have been found that examine the exposure of DBA by inhalation in animals.

Oral Exposure

DBA/2 mice (21/sex) were given an 0.2 mg/mL DBA in a water-olive oil emulsion for a total dose of 0.85 mg/day (males) and 0.76 mg/day (females) for 237–279 days (Snell and Stewart 1962, 1963). Treated mice developed pulmonary adenomas, pulmonary carcinomas, hemangioendotheliomas, and mammary carcinomas in females. Although no statistical analysis was reported, the incidences of tumors were significantly elevated relative to controls. In a gavage study, a single dose of 1.5 mg DBA in polyethylene glycol administered to Swiss mice produced forestomach papillomas after 30 weeks (Berenblum and Haran 1955).

Dermal Exposure

DBA has produced positive results in mouse skin painting assays for carcinogenicity. Swiss mice developed carcinomas following dermal application of 0.001 percent DBA (Wynder and Hoffman 1959; Van Duuren et al. 1967). Numerous studies demonstrating the complete carcinogenic activity and initiating activity of DBA are summarized in IARC (1973) and EPA (1990a).

Other Exposure Routes

Subcutaneous (s.c.) injection of DBA has been demonstrated to produce injection site tumors in several species. Single s.c. injections of 2.4, 4.7, 9.3, 18.7, 37.5, or 75 μg DBA produced tumors that appeared to be dose-related (Pfeiffer 1977). Lebet et al. (1983) found that s.c. injections of DBA were associated with fibrosarcoma formation in specific strains of mice. C3H/HeH and C57B1/6 dosed with 150 mg DBA in 0.05 mL trioctanoin had higher incidences of tumor formation, but not in the AKR/J or DBA/2J mice that were also treated. The average latency period for fibrosarcomas varied with the strain and tended to be inversely correlated with the tumor incidence rate.

N.24.2 Mutagenicity

DBA was mutagenic to *S. typhimurium* (3–5 μg/plate) in the presence of exogenous metabolic system, *Escherichia coli* and *bacillus subtilis* (12–50 μg/well). DBA was mutagenic to mammalian cells, induced unscheduled DNA synthesis and sister chromatid exchange, and was positive in assays for morphological transformation.

N.24.3 Toxicity

N.24.3.1 Epidemiologic Data in Humans

There were no studies located that investigated the toxicity of DBA in humans.

N.24.3.2 Experimental Studies in Animals

Acute Toxicity

Acute intraperitoneal injection of 3–90 mg/kg bw DBA in sesame oil reduced the growth rate of young rats that persisted for at least 15 weeks (Haddow *et al.* 1937).

Systemic Toxicity

No studies have been found on the systemic toxicity of DBA.

Developmental/Reproductive Toxicity

DBA administered by subcutaneous injection at a dose of 5 mg/rat from the onset of pregnancy resulted in fetal death and resorption and may have had adverse effects on subsequent fertility (Wolfe and Bryan 1939). It also induced BaP hydroxylase activity in the rat placenta (Welch et al. 1969).

Other Systemic Effects

No studies have been found on any other systemic toxic effects of DBA.

N.24.4 Toxicokinetics

DBA was applied to mouse skin at 1 μM/mouse and became bound to DNA in the treated area to the extent of 15 pmol/mg DNA (Phillips et al. 1979). DBA had a maximum level of binding 72 hours after treatment. DBA is biotransformed by the mixed function oxidase system to reactive intermediates that can bind to macromolecules such as DNA, leading to mutations and eventually cancer. The 5,6-oxide and the 1,2-, 3,4-, and 5,6-dihydrodiols have been detected as metabolites of DBA following incubation with exogenous activating system (Selkirk et al. 1971; NacNicoll et al. 1979; Nordqvist et al. 1979). The 3,4-dihydrodiol was active as a tumor initiating agent in mice (Buening et al. 1979b; Slaga et al. 1980), and induced pulmonary tumors in newborn mice (Buening et al. 1979b). The 3,4-dihydrodiol was the most mutagenic to bacteria (Wood et al. 1978).

The elimination of DBA and other PAHs has not been studied by any route in humans. The elimination of DBA has been studied after oral exposure in rats (Chang 1943). Approximately

90 percent of the DBA dose (not specified) was eliminated in the feces, and there was a dose-response relationship between the administered DBA in the diet or by gavage and the percentage of hydrocarbon excreted in the feces. A more detailed discussion of the elimination of PAHs is in Section **A.1.4** above.

N.24.5 Toxicity Values

As per EPA Region I methodology, the CPF for BaP was used for all carcinogenic PAHs, including DBA (EPA 1994).

N.25 DIBENZOFURAN

An oral R_fD for dibenzofuran has been given as 4×10^{-3} mg/kg-day (EPA 1995; value listed from EPA-ECAO - Regional Support provisional value).

The EPA weight-of-evidence classification for the carcinogenicity of dibenzofuran is "D"—not classifiable as to human carcinogenicity.

N.26 DICHLOROBENZENE, 1,4-

The following toxicity profile was excerpted from TRC 1994:

No oral R_fD was found in either IRIS or HEAST (EPA 1993).

The chronic inhalation R_fD for 1,4-dichlorobenzene has been established as 0.22 mg/kg-day based on an inhalation unit risk of 0.8 mg/m^3 (USPA 1993). The value is based upon an inhalation study in rats. Rats were exposed to 1,4-dichlorobenzene at a concentration of 75 ppm for 5 hours/day, 5 days/week, for 76 weeks. The critical effects observed were liver and kidney changes. An uncertainty factor of 100 was applied to obtain the R_fD. The chronic inhalation R_fC was adopted as the subchronic R_fC (EPA 1993).

The EPA weight-of-evidence clasification for the carcinogenicity of this compound is "C"—a posible human carcinogen. The oral slope factor for 1,4-dichlorobenzene is 2.4×10^{-2} (mg/kg-day)$^{-1}$ (EPA 1993). In a 103-week oral gavage study in mice, 1,4-dichlorobenzene produced liver tumors. An inhalation slope factor of 1,4-diclorobenzene is not available (EPA 1993).

N.27 DICHLOROETHANE, 1,2-

The following toxicity profile has been excerpted from TRC 1994:

No R_fD was found in IRIS or HEAST (EPA 1993).

The EPA weight-of-evidence classification for the carcinogenicity of this compound is "B2"—probable human carcinogen (EPA 1993). 1,2-Dichloroethane has been shown to produce several tumor types in rats and mice treated by gavage and lung papillomas in mice after topical aplication. An oral slope factor of 9.1×10^{-2} (mg/kg-day)$^{-1}$ (EPA 1993) and an inhalation unit risk factor of 2.6×10^{-5} (μg/m^3)$^{-1}$ have been established (EPA 1993).

N.28 DICHLOROETHENE, 1,2-

The following toxicity profile has been excerpted from TRC 1994:

The chronic oral R_fD for 1,2-dichloroehtene (mixed isomers) is 9×10^{-3} mg/kg-day and is based on a 2-year drinking water study in rats (EPA 1993). The LOAEL was 50 ppm and the critical efect observed was liver lesions. An uncertainty factor of 1,000 was applied to obtain the R_fD. The subschronic oral R_fD is also 9.3×10^{-3} mg/kg-day (EPA 1993). In the absence of inhalation R_fDs, the oral R_fDs have been cross-assigned to inhalation.

The EPA weight-of-evidence classification for the carcinogencity of this compound was not found (EPA 1993).

N.29 DOCHLOROPROPANE, 1,2-

The following toxicity profile has been excerpted from TRC 1994:

Oral R_fDs are not available for this compound. A chronic inhalation R_fD of 1.1×10^{-3} mg/kg-day has been established based on a unit risk factor of 4×10^{-3} mg/m^3 (EPA 1993) in a rat study. The critical effect was nasal mucosa hyperplasia and an uncertainty factor of 300 was applied. The confidence level in this R_fD is medium. The subchronic inhalation R_fD is 3.7×10^{-3} mg/kg-day and is based on a unit risk factor of 1.3×10^{-2} mg/m^3 (EPA 1993). The critical effect is nasal mucoase hyperplasia and the uncertainty factor was 100.

The EPA weight of evidnce for the carcinogenicity of this compound is "B2"—probable human carcinogen (EPA 1993). The oral slope factor is 6.8×10^{-2} (mg/kg-day)$^{-1}$ on the basis of a mouse gavage study (EPA 1993). Liver tumors had been induced following 1,2-dichloropropane administration. An inhalation slope factor is not available at this time (EPA 1993), and the oral slope factor has been cross-assigned to inhalation.

N.30 DIOXINS/FURANS (2,3,7,8-TCDD)

N.30.1 Cancer

Dioxin (2,3,7,8-TCDD) is a probable human carcinogen (Group B2), based on observations of increased soft tissue sarcoma and lymphomas in populations exposed primarily via contact with herbicides contaminated with 2,3,7,8-TCDD. EPA (1988) summarized the

epidemiological data as providing limited evidence that exposure to phenoxyacetic acid herbicides and/or chlorophenols is causally related to the risks of soft tissue sarcoma, but none of the data sufficed to implicate 2,3,7,8-TCDD alone. Animal carcinogenicity studies were related to dermal exposure, and indicated skin tumors resulted from application to female Swiss mice. Mixed results were obtained regarding the promoter-like potential of dioxin.

N.30.2 Mutagenicity

Genotoxicity of dioxin has been reported as mixed results in both humans and animals. Humans exposed to chemicals contaminated with dioxin (herbicide production workers) were reported to have increased chromosomal aberrations in peripheral lymphocytes, while soldiers exposed to Agent Orange had no such increases. Animal studies seem to indicate that while there is evidence of genotoxic and mutagenic effects, more definitive, confirmatory studies are required.

N.30.3 Toxicity

Effects following dioxin exposure via the oral route have been well-studied in animals, and to a lesser extent in humans. With a variety of relevant experimental durations (i.e., subchronic or chronic; from >14 days to >1 year), adverse effects from dioxin were expressed predominantly as decreased longevity, as well as reproductive, immunological, and hepatic effects (ATSDR, 1989). In general, for exposures of 15 days to 1 year, most of the animal NOAELs for these effects occur at ingestion of dioxins ranging from approximately 0.001 (longevity and liver effects) to 0.01 μg/kg/day (immunotoxicity), with no human NOAELS. Animal LOAELs ranged from 0.001 μg/kg/day (reproductive, liver effects) to 0.01 μg/kg/day (immunotoxicity), with no human LOAELs. For exposures of 1 year or longer, only an animal NOAEL of 0.001 μg/kg/day for liver toxicity was observed, with no human NOAELs or LOAELs.

No inhalation studies with animals or humans were located (ATSDR 1989).

One study was located by ATSDR in their toxicological profile for dioxin that evaluated the response of nude mouse skin to subchronic application. Application of approximately 5 μg/kg/day resulted in chloracne (facial and upper body skin lesions). This effect has been observed mostly in humans, although quantitative dose levels have not been determined. A human minimum toxic effect dose of 0.1 μg/kg was estimated (using non-human primate data and applying human data extrapolated from ingestion of PCB- and DBF-contaminated rice oil to dioxin dose data).

N.30.4 Toxicokinetics

The absorption of dioxin is most dependent on the vehicle of administration, such as in an oil base or in the diet, and factors determined from animal studies. After oral ingestion in an oil

vehicle, absorption ranges from 50 to 80 percent, while in the diet, it is between 50 and 60 percent. Dermal absorption was to a much more limited extent, although it was also highly affected by the vehicle. Dermal absorption in rats has ranged from 40 percent (in methanol) to less than 2 percent (a soil paste or activated carbon). Data were not available for inhalation absorption. Once absorbed, dioxin appears to be distributed through the body via the lymphatic system (in rats), and concentrates in liver and fatty tissue. The average half life of dioxin in humans was estimated at approximately 7 years, although half lives as long as 27 years were also estimated.

N.30.5 Metabolism

The primary metabolic processes following dioxin exposure involve the attachment of hydroxyl groups onto the parent compound or the substitution of a hydroxyl group for a chlorine atom. Although dioxin is not rapidly metabolized, once metabolites form, they are eliminated fairly rapidly as conjugates with glucuronide and sulfates. Metabolites are thought to be less toxic than dioxin itself, and it has been suggested that the rates of metabolism, as well as the types of metabolites may account for differential effects observed in several species.

N.30.6 Toxicity Values

EPA has proposed an oral slope factor of 1.6×10^5 (mg/kg-day)$^{-1}$. An interim approach for extrapolating 2,3,7,8-TCDD toxicity values for use with various isomers exhibiting fractional toxicities relative to 2,3,7,8-TCDD (i.e., use of toxicity equivalence factors) has been developed (EPA 1989). The critical study involved oral exposure of rats to dioxin in the diet for approximately 2 years, and yielded respiratory tumors and liver tumors (HEAST 1994).

EPA has proposed an inhalation slope factor of 1.6×10^5 (mg/kg-day)$^{-1}$. The toxicity equivalence factor approach has also been proposed for use with inhalation exposures. The critical study was the same as that used for the oral slope factor.

There is no established oral reference dose for dioxin (2,3,7,8-TCDD) or its isomers (IRIS 1995, HEAST 1994).

N.31 ETHYLBENZENE

N.31.1 Cancer

At present, EPA considers ethylbenzene to be unclassifiable as a human carcinogen (Class "D").

N.31.2 Mutagenicity

Ethylbenzene was not mutagenic in the Ames assay with or without rat liver homogenates (Nestman et al., 1980). Ethylbenzene has been shown to increase the mean number of sister chromatic exchanges in human whole blood lymphocyte cultures without metabolic activation at high doses (Norppa and Vainio, 1983). Ethylbenzene has also produced negative results in *Saccharomyces cerevisiae* and *Escherichia coli* (Dean et al., 1985).

N.31.3 Toxicity

Owing to its intrinsic volatility, effects of oral ingestion of ethylbenzene do not receive the degree of study that inhalation administration does. The study chosen for derivation of the oral reference dose is a rat 182-day oral bioassay (Wolf et al., 1956), in which ethylbenzene was given 5 days/week at doses of 13.6, 136, 408, or 680 mg/kg-day in olive oil gavage. There were 10 albino female rats/dose groups and 20 controls. Observed responses included growth, mortality, appearance and behavior, hematologic findings, terminal concentration of urea nitrogen in the blood, final average organ and body weights, histopathologic findings, and bone marrow counts.

Ethylbenzene has been shown to be a reproductive toxicant via subchronic or chronic inhalation exposure durations to laboratory animals. Andrew et al. (1981) exposed Wistar rats and New Zealand white rabbits via inhalation for 6-7 hours/day, 7 days/week to 100 or 1,000 ppm (434 or 4,342 mg/m) ethylbenzene during days 1–19 and 1–24 of gestation, respectively. A separate group of female rats was exposed 3 weeks prior to mating and exposure was continued into the gestation period. Actual concentrations were within 10 percent of the target dose concentrations. All pregnant animals were sacrificed 1 day prior to term (21 days for rats; 30 days for rabbits). Maternal organs were examined histopathologically. Uteri were examined, fetuses weighed, sexed and measured for crown-to-rump length, and examined for external, internal and skeletal abnormalities. Ethylbenzene did not elicit teratogenicity, embryotoxicity or fetotoxicity in rabbits at either exposure level. Maternal toxicity was not evident at either dose, nor was there any evidence of histologic damage in any of the dams' organs. The results of the rabbit study indicate a no observed effect level (NOEL) at 100 ppm based on a lack of developmental effects.

In rats exposed only during gestation, there were no histopathological effects in the maternal organs examined, although the absolute liver, kidney, and spleen weights were significantly increased in the dams dosed at 1,000 ppm. There was no effect on fertility or any other measure of reproductive status in either exposure group. An increased incidence of supernumerary and rudimentary ribs were observed in the high dose group, and an elevated incidence of extra ribs was observed in both of the exposure groups.

In female rats exposed prior to and during gestation, there was an increased incidence of extra ribs in the high exposure group. There were no effects on the fertility or other measures of

reproductive status. No fetal toxicity was noted at either exposure level. Absolute and relative liver and spleen weights were increased in the dams in the 1,000 ppm group; only relative kidney weight was increased significantly. No histopathological effects were observed in any of the organs examined. Skeletal variants were observed in both exposure groups. By themselves, the effects are marginally significant, even in the high dose group. By noting a cluster of additional effects including a slightly reduced litter size observed at 1,000 ppm, a weight-of-evidence approach has been used by Andrew et al. (1981) to determine that 1,000 ppm is the lowest observed effect level (LOAEL) in this study. Additional support for this position is taken from the observations of elevated maternal organ weights at 1,000 ppm.

N.31.4 Toxicokinetics

In humans, inhaled ethylbenzene is rapidly and efficiently absorbed via the lungs. Bardodej and Bardodejova (1970) exposed human volunteers for 8 hours to ethylbenzene at concentrations between 23 and 85 ppm (100 and 370 mg/m^3). The volunteers retained 64 percent of the respired vapor, with only trace amounts being released in exhaled air. In another study, volunteers exposed to similar levels of ethylbenzene retained 49 percent, suggesting the degree of variability in absorption rates among individuals (Gromiec and Piotrowski, 1984). Similarly, Harlan-Wistar rats absorbed 44 percent of respired ethylbenzene (Chin et al., 1980). Ethylbenzene can also be absorbed through the skin, but at low rates. Ethylbenzene has been detected in subcutaneous adipose tissue samples of workers manufacturing styrene and rubber. Tissue concentrations were measured after the workers had been free of potential exposure for 3 days (Wolf et al., 1977). Most ethylbenzene is excreted in the urine after a series of biotransformations to numerous metabolites. The urinary metabolites appear to be primarily a result of metabolism by cytochrome P-450 (Sullivan et al., 1976). Approximately 70 and 25 percent of the absorbed dose of ethylbenzene is excreted in the urine as mandelic acid and phenylglyoxyclic acid. Numerous other metabolites are also detected in the urine of humans exposed to ethylbenzene (Bardodej and Bardodejova, 1970).

N.31.5 Metabolism

When inhaled by humans, ethylbenzene is metabolized mostly to mandelic acid which is excreted. The remainder is further metabolized to phenylglyoxylic acid which is also excreted in the urine.

N.31.6 Toxicity Values

EPA has established an oral reference dose (R_fD) of 0.1 mg ethylbenzene ingested per kilogram body weight per day, based on renal and hepatic toxicity in rat subchronic oral bioassays (Wolf et al., 1956). This R_fD is based upon a NOEL of 136 mg/kg-day, adjusted to 97.1 mg/kg-day to account for conversion from a 5-day per week dosing schedule to a 7-day

per week dosing schedule, and by applying an aggregate uncertainty factor of 1,000. This uncertainty factor accounts for intra- and inter-species extrapolation (10-fold each) and for extrapolation of a subchronic effect level to a chronic effect level (10-fold).

EPA has established an inhalation reference concentration (R_fC) of 1 mg ethylbenzene per cubic meter of air, based on developmental toxicity in ethylbenzene-exposed rats and rabbits (Andrew et al., 1981; Hardin et al., 1981. This value was used to generate an inhalation R_fD of 8.6×10^{-1} mg/kg-day. This inhalation R_fC is based upon an adjusted human-equivalent-concentration NOAEL of 434 mg ethylbenzene/m^3, and by applying an aggregate uncertainty factor of 300. The uncertainty factor accounts for human sensitivity (10-fold), the absence of multigenerational reproductive and chronic studies (10-fold) for interspecies conversion (3-fold).

N.32 FLUORANTHENE

Fluoranthene ($C_{16}H_{10}$, MW 202.3, CAS registry number 206-44-0) is a polyaromatic hydrocarbon that exists as pale-yellow needles or plates in its pure form. There is no commercial production or known use of fluoranthene, but it is formed by the incomplete combustion of coal, oil, and gas. It has been identified in cigarette smoke, engine exhaust, motor oils, coal tar, and charcoal-broiled steaks (IARC 1983).

N.32.1 Cancer

Fluoranthene is not classified as a carcinogenic PAH based on the lack human evidence and inadequate data from animal studies.

N.32.2 Mutagenicity

Fluoranthene was mutagenic to *S. typhimurium* tester strains TA98, TA100, and TM677 (Hermann et al. 1980; LaVoie et al. 1982b; Kaden et al. 1979) and to cultured human lymphoblastoid cells (Thilly et al. 1980) in the presence of an exogenous metabolic system. It was negative in reverse mutation assays in *S. typhimurium* strains TA1535, TA1537, TA1538, TA98, and TA100 in one study (Salamone et al. 1979).

N.32.3 Toxicity

N.32.3.1 Epidemiologic Data in Humans

No studies have been found on the toxicity of fluoranthene in humans.

N.32.3.2 Experimental Studies in Animals

Systemic Toxicity

One adequately conducted study has been reported on the toxicity of fluoranthene resulting from repeated and prolonged exposures (EPA 1988c). Male and female CD-1 mice (20/sex/group) were gavaged for 13 weeks with 0, 125, 250, or 500 mg/kg-day fluoranthene. A fifth group of mice (30/sex) was established in the study for baseline blood evaluations. All treated mice exhibited nephropathy, increased salivation, and increased liver enzyme levels in a dose-dependent manner. However, these effects were either not statistically significant or not considered adverse at 125 mg/kg-day. Increased food consumption and increased body weight were observed in mice exposed to 500 mg/kg-day. Statistically significant increases in SGPT values in absolute and relative liver weights were measured in mice exposed to 250 and 500 mg/kg-day. Compound-related microscopic liver lesions (indicated by pigmentation) were observed in 65 and 87.5 percent of the mid- and high-dose mice, respectively.

Developmental/Reproductive Toxicity

No studies have been found that investigated the developmental or reproductive toxicity of fluoranthene.

Other Systemic Toxic Effects

No studies have been found that investigated any other systemic toxic effects of fluoranthene.

N.32.4 Toxicokinetics

No studies have been found on the toxicokinetics of fluoranthene alone, although information has been reported about the toxicokinetics of PAHs discussed in Section **A.1.4** above.

N.32.5 Toxicity Values

Based on increased SGPT levels, kidney and liver pathology, and clinical and hematological changes, the LOAEL is considered to be 250 mg/kg-day, and the corresponding NOAEL is 125 mg/kg-day (EPA 1988c). An uncertainty factor of 3000 reflects 10 for interspecies conversion, 10 for intraspecies variability, 10 for use of a subchronic study for chronic human NOAEL derivation, and 3 for suspected reproductive toxicity based on observations of reproductive toxicity of BaP in animal studies. Therefore, a chronic human NOAEL for fluoranthene of 0.04 mg/kg-day was used for this study. For subchronic exposure, the uncertainty factor of 300 includes 10 for interspecies variability, 10 for intraspecies variability, and 3 for suspected reproductive toxicity based on the reproductive toxicity of BaP in animal studies. Therefore the subchronic NOAEL for fluoranthene in humans is estimated to be 0.4 mg/kg-day.

Since fluoranthene is toxic at organs distant from the portal of entry, the systemic dose is expected to govern its toxic potency. Consequently, a human NOAEL for fluoranthene by either inhalation or skin contact will be 0.04 mg/kg-day for use in this risk assessment; however, the systemic doses will be governed by the rate and efficiency of absorption at each portal of entry. Data on the differential absorption of fluoranthene by route of compound administration are not available; data from two LD_{50} studies in rats suggest that absorption is comparable between the oral and dermal routes of exposure (IARC 1983).

N.33 FLUORENE

Fluorene ($C_{13}H_{10}$, MW 166.2, CAS registry number 86-73-7) is a polycyclic aromatic hydrocarbon that exists in pure form as white leaflets or flakes. Fluorene is virtually insoluble in water, but soluble in organic media. Fluorene is formed by the incomplete combustion of fossil fuels, and is present in fossil fuels. It also has been found in coal tar, cigarette smoke, engine exhaust, and surface water.

N.33.1 Cancer

Fluorene is not classified as a carcinogen (category "D") based on the lack of evidence from human and animals studies.

N.33.1.1 Epidemiologic Data in Humans

No studies have been located on the carcinogenic effects of fluorene in humans.

N.33.1.2 Experimental Studies in Animals

Inhalation Exposure

No studies have been found that examined exposure to fluorene by inhalation in experimental animals.

Oral Exposure

In one study, female buffalo rats were fed a diet containing 0.05 percent fluorene in 3 percent corn oil for approximately 18 months or in propylene glycol for about 6 months (11 mg/kg-day) (Morris et al. 1960). Tumors formed in controls and exposed animals at about the same incidences, ranging from 6 to 34 percent. No statistical analyses were reported. In another study, two groups of albino rats were fed various concentrations of fluorene in the diet (Wilson et al. 1947). One group of rats was fed several concentrations ranging from 0.062 to 1.0 percent fluorene for 104 days. The rats fed 0.5 and 1.0 percent fluorene had significant decreases in their rate of growth, but appeared normal in all other aspects. The second group

received 0.1254, 0.25, or 0.5 percent fluorene in the diet for 453 days. Only one rat (0.125 percent fluorene) developed a small benign kidney tubular adenoma. The total number of animals treated and the use of a control group were not provided.

Dermal Exposure

Dermal application of fluorene for carcinogenic activity, initiating activity, or co-carcinogenicity with 3-methylcholanthrene in mouse skin painting assays were either not positive or were inconclusive (Kennaway 1924a,b; Riegel et al. 1951; LaVoie et al. 1979, 1981a,b).

Other Exposure

Seven subcutaneous injections of 10 mg fluorene administered in glycol to strain A mice did not result in injection-site tumor formation within 18 months (Shear 1938). No controls were used in this experiment.

N.33.2 Mutagenicity

Fluorene did not produce positive mutagenic response in reverse mutation assays in five strains of *S. typhimurium* (1000 μg/plate) or in forward mutation assays in *Salmonella* strain TM677 (McCann et al. 1975; LaVoie et al. 1979, 1981a; Sakai et al. 1985; Bos et al. 1988; Kaden et al. 1979; Mamber et al. 1983). Fluorene was also negative in most DNA damage assays with the exception of a positive result in a strand-break assay in L5178Y/mouse lymphoma cell at 0.15 μM in the presence of hepatic homogenates and at 0.5 μM in the absence of hepatic homogenates (Garberg et al. 1988).

N.33.3 Toxicity

N.33.3.1 Epidemiologic Data in Humans

No studies have been found on the toxicity of fluorene in humans.

N.33.3.2 Experimental Studies in Animals

Systemic Toxicity

Only one adequately conducted study has been reported on the toxicity of fluorene resulting from repeated and prolonged exposures (EPA 1989e). CD-1 mice (25/sex/group) were exposed to 0, 125, 250, or 500 mg/kg-day fluorene suspended in corn oil by gavage for 13 weeks. Increased salivation, hypoactivity, and urine-wet abdomens in males were observed in all treated animals. The percentage of mice exhibiting hypoactivity was dose-related. In mice exposed at 500 mg/kg-day, labored respiration, ptosis (drooping eyelids), and unkempt

appearance were also observed. A significant decrease in red blood cell count and packed cell volume was observed in females treated with 250 mg/kg-day fluorene and in males and females treated with 500 mg/kg-day. Decreased hemoglobin concentration and increased total serum bilirubin levels were also observed in the 500 mg/kg-day group. Decreases in erythrocyte count, packed cell volume, and hemoglobin concentration were all observed at 125 mg/kg; however, these effects, although apparently dose-dependent, were not statistically significant. Other treatment-related effects included: a dose-dependent increase in relative and absolute liver weights in the middle and high dose groups; and, a significant increase in absolute and relative spleen and kidney weight was observed in males and females exposed to 500 mg/kg-day, with accompanying histopathological changes in the amounts of hemosiderin in the spleen and in the Kupffer cells of the liver. No other histopathological lesions were observed.

Developmental/Reproductive Toxicity

No studies have been found on the developmental or reproductive toxicity of fluorene in experimental animals.

Other Systemic Effects

No studies have been found that investigated any other systemic toxic effects of fluorene in experimental animals.

N.33.4 Toxicokinetics

No studies have been found on the toxicokinetics of fluorene alone, although information has been reported about the toxicokinetics of PAHs discussed in Section **A.1.4** above.

N.33.5 Toxicity Values

EPA has established an oral reference dose of 0.04 mg/kg-day for fluorene based on a subchronic toxicity study performed in CD-1 mice (EPA 1993f). Based on hematological effects from this study, the LOAEL was considered to be 250 mg/kg-day and the NOAEL, 125 mg/kg-day. An uncertainty factor of 3,000, reflecting 10 for interspecies variability, 10 for intraspecies variability, 10 for use of a subchronic study for chronic human NOAEL derivation, and 3 for suspected reproductive toxicity based on observations of reproductive toxicity of fluorene in animal studies yields a chronic human NOAEL of 0.04 mg/kg-day. For subchronic exposure, the uncertainty factor of 300 includes 10 for interspecies variability, 10 for intraspecies variability, and 3 for suspected reproductive toxicity based on the reproductive toxicity of BaP in animal studies. Therefore the subchronic NOAEL for fluorene in humans is estimated to be 0.4 mg/kg-day.

N.34 INDENO(1,2,3-CD)PYRENE

Indeno(1,2,3-cd)pyrene ($C_{22}H_{12}$, MW 276.3, CAS registry number 193-39-5) is a PAH that forms yellow plates or needles as a pure substance when recrystallized from light petroleum solution. Indeno(1,2,3-cd)pyrene is a product of incomplete combustion and also occurs in fossil fuels, cigarette smoke, exhaust emissions, and motor oils. It also is found in natural sources such as surface water. There is no commercial production of indeno(1,2,3-cd)pyrene.

N.34.1 Cancer

Indeno(1,2,3-cd)pyrene is considered by EPA to be a probable human carcinogen (category "B2") based on no human data and sufficient data from experimental animal studies.

N.34.1.1 Epidemiologic Data in Humans

No studies have been located that investigated the carcinogenicity of indeno(1,2,3-cd)pyrene in humans. Indeno(1,2,3-cd)pyrene is a component of mixtures (e.g., coal tar, soots, coke oven emissions, and cigarette smoke) that have been associated with human cancer.

N.34.1.1 Experimental Studies in Animals

Inhalation Exposure

No studies have been found on the carcinogenic effects of exposure to indeno(1,2,3-cd)pyrene in experimental animals by inhalation.

Oral Exposure

No studies have been found on the carcinogenic effects of exposure to indeno(1,2,3-cd)pyrene in experimental animals by ingestion.

Dermal Exposure

Indeno(1,2,3-cd)pyrene has been shown to be an effective tumor initiating compound in mouse skin painting assays in several mouse strains (Hoffmann and Wynder 1966; Rice et al. 1986). Swiss albino Ha/ICR/Mil mice (20/group) dermally treated with indeno(1,2,3-cd)pyrene in acetone solutions (0.01, 0.05, and 0.1 percent) developed skin tumors (papillomas and carcinomas) in a dose-related manner (Hoffmann and Wyndner 1966). The authors also reported a total dose of 250 mg indeno(1,2,3-cd)pyrene applied in 10 applications in 2 days, followed by promotion with croton oil was a sufficient tumor initiating dose. Tumor incidence was essentially 100 percent in Crl:CD-1(ICR)BR female mice given a total initiating dose of 1 mg indeno(1,2,3-cd)pyrene in 10 days, followed by promoting agent TPA 10 days later (Rice et al. 1986).

Other Exposure Routes

Osborne-Mendel rats (35/group) received lung implants of indeno(1,2,3-cd)pyrene at doses of 0.65, 3.4, or 17 mg/kg in a 0.05 mL mixture of beeswax and trioctanoin for their lifetime (Deutsch-Wenzel et al. 1983). The incidence of epidermoid carcinomas in the lung and thorax was statistically significant and dose-related. The tumor occurrences were: 0 percent in untreated controls, 0 percent in vehicle controls, 11 percent in low-dose, 23 percent in mid-dose, and 60 percent in high-dosed animals.

Male and female CD-1 mice (32/group) were given intraperitoneal injections of indeno(1,2,3-cd)pyrene in DMSO on days 1, 8, and 15 after birth for a total dose of 580 μg/mouse. The animals were sacrificed at 52 weeks of age and evaluated for tumors. Only one male mouse developed a lung adenoma (not statistically significant), and no females developed tumors.

N.34.2 Mutagenicity

Indeno(1,2,3-cd)pyrene was mutagenic in *S. typhimurium* in strains TA100 and TA98 in the presence of an exogenous activating system (LaVoie et al. 1979; Hermann et al. 1980).

N.34.3 Toxicity

N.34.3.1 Epidemiologic Data in Humans

No human epidemiologic studies have been found on indeno(1,2,3-cd)pyrene toxicity.

N.34.3.2 Experimental Studies in Animals

No studies have been found that investigated the developmental, reproductive, or any other toxicities of indeno(1,2,3-cd)pyrene in experimental animals.

N.34.4 Toxicokinetics

No studies have been found on the toxicokinetics of indeno(1,2,3-cd)pyrene alone, although information has been reported about the toxicokinetics of PAHs discussed in Section **A.1.4** above.

N.34.5 Toxicity Values

As per EPA Region I methodology, the CPF for BaP was used for all carcinogenic PAHs, including indeno(1,2,3-cd)pyrene (EPA 1994).

N.35 LEAD

Lead (Pb, MW 207.2, CAS registry number: 7439-92-1) is a bluish-gray metal which is malleable and possesses a relatively low melting point. Lead is produced commercially from ore obtained through mining. Lead is used commercially in the production of batteries, ammunition, and in a wide variety of metal products. Within the last several years, the use of lead in fuels, paints, and ceramics has been curtailed due to the increasing evidence of adverse health effects associated with lead exposure.

N.35.1 Cancer

The carcinogencity of lead has been classified as Category "B2" by the EPA (1993g). No specific inhalation studies of cancer in animals or humans were located. There were no studies of cancer in humans following only oral exposure, although several epidemiological studies of occupationally exposed humans were conducted. Interpretation of these data is confounded by co-exposure to other potentially carcinogenic metals, as well as the inclusion of smokers in the studied populations. In several of these studies, small but statistically significant increases in either total malignancies (Kang et al. 1980; Cooper et al. 1985), digestive tract tumors (Kang et al. 1980; Cooper et al. 1985), or renal cancers (Selevan et al. 1985; Baker et al. 1980b) were observed.

N.35.1.1 Epidemiologic Data in Humans

Lead at very high doses has been shown to cause some tumors in animals (Azar et al. 1973; Koller et al. 1985; Van Esch and Kroes 1969). However, epidemiological studies, despite large exposures among workers, have failed to indicate that lead may cause cancer in humans (Kang et al. 1980; Cooper et al. 1985; Selevan et al. 1985; Baker et al. 1980b). The EPA weight-of-evidence carcinogen classification of inorganic lead is "B2" (i.e., a probable human carcinogen, based on animal evidence and minimal to no human data) for both oral and inhalation routes of exposure. However, no oral or inhalation slope factors are available for inorganic lead (EPA 1993g).

N.35.1.1 Epidemiologic Data in Animals

Animal studies have shown increased renal tumors in rat strains and one mouse strain after oral exposure to several soluble lead salts. Rats given lead acetate for 2 years developed renal tumors in a dose-dependent manner (Azar et al. 1973), while rats given a single dose of lead acetate developed renal tubular carcinomas (Koller et al. 1985). Mice given lead acetate in the diet also showed increases in renal tumors (Van Esch and Kroes 1969).

N.35.2 Mutagenicity

Lead acetate and lead chloride did not induce mutagenicity in *Salmonella*/microsome assays for base-pair and frame shift mutations, with or without microsomal activation (Rosenkranz and Poirier 1978; Simmon 1979; Simmon et al. 1979; Nestmann et al. 1979). There are conflicting reports on the effects of lead salts on mammalian chromosomes *in vitro* and *in vivo* (IARC 1980c). Lead acetate induced cell transformation in Syrian hamster embryo cells (DiPaolo et al. 1978); however, no significant increases in structural chromosome aberrations or mitotic abnormalities were observed in Chinese hamster cells. Lead acetate has been reported to induce dominant lethal effects in mice in one study (Varma et al. 1974), but not in another study (Kennedy and Arnold 1971). Similarly, chromosomes from bone-marrow cells taken from mice fed for 2 weeks with lead acetate in the diet showed an excess of gaps and breaks (usually involving single chromatids) and of fragments (Muro and Goyer 1969). However, Jacquet et al. (1977) found no excess of severe chromosome or chromatid aberrations in bone-marrow cells of mice fed for 1–3 months with lead acetate in the diet. Factors that may influence induction of chromosomal aberrations by lead include dose and nutritional status (Deknudt et al. 1977a). Grandjean et al. (1983) showed a relationship between increased sister chromatid exchanges and lead exposure in workers.

Lead has been shown, in a number of DNA structure and function assays, to affect the molecular processes associated with the regulation of gene expression (EPA 1986a).

N.35.3 Toxicity

Inhalation and Oral Exposure

The predominant systems effected by chronic (>365 days) lead inhalation or ingestion by humans are the hematological, neurological, and cardiovascular systems. Toxic hematological effects include inhibition of several enzymes involved in heme synthesis, with resultant depression of hemoglobin synthesis and anemia. Blood lead levels for these effects vary from having no threshold level (i.e., effects are seen at *any* blood lead level) for certain enzymes to 3–40 μg/dL for others (Koren et al. 1990; Harlan et al.1988). The principal cardiovascular effect is elevation of blood pressure (Harlan 1988), a dose-dependent effect which also lacks any apparent threshold. Neurological effects typically manifest themselves as neurobehavioral effects and effects on the peripheral nervous system. Such effects can range from weakness in the limbs (Zimmerman-Tansella et al. 1983), fatigue (Haenninen et al. 1979; Baker et al. 1979), and loss of memory function (Haenninen et al. 1979), to significant impairment in learning capacity (Wang et al. 1989; Rummo et al. 1979; Ernhart et al. 1981), limb tremors (Baker et al. 1979), and encephalopathy at higher blood levels (Rummo et al. 1979). High levels of lead in the blood have also been correlated with nephropathy, gastrointestinal effects and electrocardiographic abnormalities (ATSDR 1993).

Dermal

No studies specifically related to effects from dermal exposure to inorganic lead were located. The dermal absorption of lead is estimated at less than 1 percent (i.e., 0.3 percent) (Moore et al. 1980). If any amounts of lead were absorbed by this route, effects would be represented by the systemic effects described above for the other routes.

N.35.4 Toxicokinetics

Adult men absorbed approximately 10 percent of a radioactively labelled ingestion dose in studies by Rabinowitz et al. (1973, 1976). In infants, a mean of 41.5 percent of ingested lead was observed in a study by Ziegler et al. (1978); individual absorption was related inversely to dietary calcium levels. Tissue distribution studies of lead in men fatally poisoned by tetraethyllead revealed lead levels of 7–240 mg/kg present in tissues in the lung, brain, liver, and kidney (Davis et al. 1963). Low doses of an organic lead compound, tetraethyllead, are distributed throughout various tissues, particularly to the brain. Tetraethyllead breaks down into triethyllead and minute amounts of inorganic lead, mainly in the liver; both products are excreted in the urine within a relatively short period of time (Tsuchiya 1979).

The majority of the effects of lead have been observed in occupationally exposed humans, where the routes of exposure are primarily inhalation and some oral ingestion of lead particulates. Effects of lead on humans are typically discussed in terms of their correlating absorbed internal body dose, a blood lead level (μg/dL). In many instances, internal doses are actually the result of multiple routes of exposure. There does not seem to be a significant difference in the effects of lead via the inhalation versus the oral routes, and these effects will be discussed together. Dermal effects from inorganic lead exposure, the predominant form in soils, are minimal due to a negligible extent of dermal absorption.

N.35.5 Toxicity Values

An oral R_fD for lead has not been derived by EPA (1993g). Some health effects of lead may occur at blood lead concentrations so low as to be essentially without a biological threshold. This is the basis for EPA's decision not to derive an R_fD for lead. EPA's Work Group discussed inorganic lead, and lead compounds, at two meetings (07/08/85 and 07/22/85) and considered it inappropriate to develop an R_fD for inorganic lead (EPA 1992). In addition, an R_fC has not been determined by EPA.

N.36 MANGANESE

N.36.1 Cancer

At present, EPA considers manganese to be unclassifiable as a human carcinogen (Class "D"), based on an absence of human carcinogenicity data, inadequate evidence of carcinogenicity in animals, and inadequate genotoxicity data (EPA, 1993).

N.36.2 Mutagenicity

Minimal studies of manganese in genotoxicity assays have been conducted. No studies were located regarding genotoxic effects in humans, while treatment of male rats with manganese at repeated oral doses for 80 days did not produce any significant chromosomal damage in bone marrow or sperm cells (ATSDR 1991).

N.36.3 Toxicity

Ingestion is one of the primary routes of exposure to inorganic manganese, although it is not absorbed appreciably across the intestinal walls (probably less than 5 percent). CNS effects are the typical effects observed following ingestion and inhalation exposures. Discrepancies in the extent of absorption or bioavailability of manganese in variable carrier media has prompted the development of separate oral R_fDs for manganese, one in food and one in water.

N.36.4 Toxicokinetics

Exposure to manganese mainly occurs via ingestion and inhalation. The extent to which manganese is absorbed across the intestine is approximated at 3-5 percent, and does not appear to be substantially influenced by the carrier medium (i.e., water versus food). Similar extents of absorption have been noted in animals as well, with typical amounts equal to 2.5-5.5 percent. Manganese distributes to various tissues following ingestion, and serves as a normal tissue constituent. Tissue levels may be somewhat higher in animal tissues than in their human tissue counterparts. Manganese which is inhaled, typically in particle form, is absorbed to some unknown extent across the lungs, and a certain percentage of inhaled manganese particles are subsequently swallowed and ingested as well (ATSDR 1991).

N.36.5 Metabolism

Manganese is not known to be "metabolized" or biotransformed, and behavior within the body would be essentially limited to absorption, distribution, potential sequestration, and excretion. The valence state of manganese is thought to undergo changes within the body (alterations in oxidation state), which may influence its ability to form complexes or serve as a co-factor for certain proteins (ATSDR 1991).

N.36.6 Toxicity Values

Two separate oral R_fDs have been proposed by the EPA, one based on ingestion of manganese in water and the other based on the ingestion of manganese in food. The water $R_fD$assumes a separate dietary intake of manganese, as this essential element is found in varying amounts in all diets.

As summarized by the EPA 1993:

The World Health Organization (WHO) reviewed several investigations of adult diets and reported the average daily consumption of manganese to range from 2.0–8.8 mg Mn/day. Higher manganese intakes are associated with diets high in whole-grain cereals, nuts, green leafy vegetables, and tea. From manganese balance studies, the WHO concluded that 2–3 mg/day is adequate for adults and 8–9 mg/day is "perfectly safe."

Evaluations of standard diets from the United States, England, and Holland reveal average daily intakes of 2.3–8.8 mg Mn/day. However, depending on individual diets, a normal intake may be well over 10 mg Mn/day, especially from a vegetarian diet. While the actual intake is higher, the bioavailability of manganese from a vegetarian diet is lower, thereby decreasing the actual absorbed dose.

No signs of toxicity were reported in patients (number not specified) given 30 mg manganese citrate (9 mg Mn/day) for many months. Assuming the patients also consumed 2.5 mg Mn/day in food, the total manganese intake would be approximately 11.5 mg Mn/day.

The Food and Nutrition Board of the National Research Council (NRC, 1989) determined an "adequate and safe" intake of manganese to be 2–5 mg/day for adults. This level was chosen because it includes an "extra margin of safety" from the level of 10 mg/day, which the NRC considered to be safe for an occasional intake.

An epidemiologic study of manganese in drinking water was performed by Kondakis et al. (1989). Three areas in northwest Greece were chosen for this study, with manganese concentrations in natural well water of 3.6–14.6 μg/L in area A, 81.6–252.6 ug/L in area B, and 1,600–2,300 μg/L in area C. The total population of the 3 areas being studied ranged from 3200 to 4350 people. Although the amount of manganese in the diet was not reported, the authors indicated that most of the food was purchased from markets. The individuals chosen were submitted to a neurologic examination, the score of which represents a composite of the presence and severity of 33 symptoms (e.g., weakness/fatigue, gait disturbances, tremors, dystonia). Whole blood and hair manganese concentrations were also determined. The authors indicate that the difference in mean scores for area C versus A was significantly increased for both sexes combined. In a subsequent analysis, logistic regression indicated that there is a significant difference between areas A and C, even when both age and sex are taken into account (Kondakis, 1990).

The individuals examined in the Greek epidemiologic study also had exposure to manganese in their diet. This was roughly estimated to be 10–15 mg/day because of the high intake of vegetables (Kondakis, 1990). The use of this study in supporting the derivation of a separate "water R_fD" assumes, then, that the manganese exposure from drinking water is in addition to that found in the diet. If the water R_fD is used to support a drinking water standard for manganese, no relative source contribution needs to be applied because dietary intake of manganese is already assumed. An R_fD of 0.005 mg/kg-day for manganese in water is equivalent to a drinking water standard of 0.2 mg/L.

The information used to determine the R_fD for manganese in food was taken from many large populations consuming normal diets over an extended period of time with no adverse health effects. Humans exert an efficient homeostatic control over manganese such that body burdens are kept constant with variations in diet. It is recognized that manganese is an essential element, being required for normal human growth and maintenance of health. It has also been suggested that children are less susceptible to manganese intoxication and may require slightly higher levels of manganese than do adults. The available information provided a chronic NOAEL in many cross-sections of human populations.

The major toxic effects of inhaled manganese are primarily neurological. A syndrome called "manganism" has been observed only in workers exposed to chronic, high levels of manganese. It is characterized by preliminary general weakness, anorexia and muscle pain, with psychological signs such as apathy and dullness, as well as impotence. Advanced stages include difficulty in walking, muscle tremor, and behavioral disturbances. This syndrome has not been observed for low level, chronic or sporadic exposures, nor has it been observed in studies with animals (ATSDR 1991).

Minimal information regarding manganese and the dermal exposure route could be located. It is generally regarded that manganese uptake across intact skin is very limited, as is the case for most inorganic forms of metal ions.

N.37 MERCURY

N.37.1 Cancer

At present, EPA considers mercury to be unclassifiable as a human carcinogen (Class "D"), based on an absence of human carcinogenicity data, inadequate evidence of carcinogenicity in animals, and inadequate genotoxicity data (EPA, 1993).

Animal carcinogenicity studies are briefly summarized by EPA (1993):

> When 39 rats were injected *i.p.* over 2 weeks with metallic mercury and observed for their lifetimes, sarcomas were seen only in those tissues that had been in direct contact with the metal (Druckrey et al., 1957). No concurrent controls were reported.
>
> Mitsumori et al. (1981) fed groups of 60 male and 60 female SPF ICR mice 0, 15 or 30 ppm methyl mercury chloride in the diet for up to 78 weeks. The majority of the 30 ppm groups died from neurotoxicity by week 26. Histopathology on kidney tissue from all animals surviving after 53 weeks revealed renal tumors in 13 of 16 males in the 15 ppm group (2 adenomas, 11 adenocarcinomas). One adenoma was detected among 37 controls surviving to week 53 or beyond, and no tumors were seen in either control or exposed females. The possible presence of tumors at other sites was not reported in this preliminary communication.
>
> The relevance of data from studies of organic mercury to the possible carcinogenicity of inorganic mercury is uncertain.

N.37.2 Mutagenicity

Methyl mercury hydroxide administered in the diet to *Drosophila melanogaster* at 5 mg/L^{-1} induced chromosomal nondisjunction, while methyl and phenyl mercury produced small increases in the rate of point mutations (Ramel, 1972).

N.37.3 Toxicity

Ingestion is one of the primary routes of exposure to mercury, but elemental mercury is only very poorly absorbed from the gastrointestinal tract (probably less than 0.01 percent) (Hammond and Beliles, 1980). While CNS effects are the typical target organ effects observed following inhalation exposures, renal effects are the primary target of ingested inorganic mercury. In chronic exposures, nephrotoxicity is typically manifest as proteinuria; in severe cases, the nephrotic syndrome is observed, with subsequent edema and hypoproteinemia (Hammond and Beliles, 1980).

The major toxic effects of inhaled mercury are primarily neurological. In acute exposure scenarios, clinical signs include paresthesia, ataxia, dysarthria, and deafness (Berlin, 1979). Chronic exposure typically involves exposure to both mercury vapor and divalent mercury. Toxic symptoms include renal damage with nephrotic syndrome as well as increased salivation, inflammatory changes of the gums and the appearance of black lines along the gums (Skerfving and Vostal, 1972).

In historical medicinal preparations, treatment with mercury compounds produced skin reactions such as erythema and dermatitis (Bhamra and Costa, 1992. Other clinical signs include irritation, desquamation, loss of hair, ulcerations, hyperplasia and hyperkeratosis (Bhamra and Costa, 1992; Matheson et al., 1980)

N.37.4 Toxicokinetics

Exposure to mercury mainly occurs via inhalation and ingestion. Absorption of mercury from the respiratory and gastrointestinal tracts is dependent on its chemical form (Berlin, 1979). Mercury vapor is very efficiently absorbed from the lungs, while elemental mercury is poorly absorbed from the gut (Bhamra and Costa, 1992). After gastrointestinal absorption, elemental mercury is oxidized to a divalent form which accumulates mainly in the kidney and, in part, in the lung. Divalent mercury does not traverse the blood brain barrier as readily as mercury vapor. Inorganic mercury will also accumulate in the intestinal tract, skin, spleen, and testes, but to lesser degrees (Bhamra and Costa, 1992). Elimination of mercury vapor is primarily by exhalation, with an estimated biological half-time of approximately 60 days (Hurst et al., 1976; Rohala et al., 1973), while mercury sequestered in the brain may take several years for a halving of retained mercury (Rossi et al., 1976. Divalent mercury, with an estimated biological half-time of 42 days, is primarily excreted in the urine and feces (Rohala et al., 1973).

N.37.5 Metabolism

Inorganic mercury is not known to be "metabolized" or biotransformed, and behavior within the body would be essentially limited to absorption, distribution, potential sequestration, and excretion.

N.37.6 Toxicity Values

The chronic oral R_fD is 3×10^{-4} mg/kg-day (EPA 1993, as cited in TRC 1994), in order to prevent the critical effect of renal damage. An uncertainty factor of 1,000 was applied in order to determine the R_fD. The subchronic R_fD for mercury is also 3×10^{-4} mg/kg-day (EPA 1993, as cited in TRC 1994).

The chronic R_fD value for inhalation for mercury is 3×10^{-4} mg/m^3 (8.6×10^{-5} mg/kg-day (EPA 1993, as cited in TRC 1994), and is based on several occupation studies. Neurotoxicity was the critical effect following inhalation exposure. An uncertainty factor of 30 was applied to obtain the R_fD. The subchronic inhalation R_fD is also 8.6×10^{-5} mg/kg-day (EPA 1993, as cited in TRC 1994).

N.38 METHYLENE CHLORIDE

The following toxicity profile has been excerpted from TRC 1994:

The chronic oral R_fD for methylene chloride is 6×10-2 mg/kg-day (EPA 1993) and is based on a drinking water bioassay in rats. Rats were given methylene chloride at doses of 5, 50, 125, or 250 mg/kg-day in drinking water for 2 years. The LOAEL was 52.58 and 58.32 mg/kg-day for males and females, respectively, and the critical effect was liver toxicity. The NOAELs were 5.85 and 6.47 mg/kg-day for males and females, respectively, and an uncertainty factor of 100 was applied to these NOAELs to obtain the R_fD. This uncertainty factor was used to account for inter- and intra-species variability. The confidence level in the R_fDis medium. The subchronic oral R_fD is also 6×10^{-2} mg/kg-day (EPA 1993).

The chronic inhalation R_fD for methylene chloride is 0.86 mg/kg-day (3 mg/m^3) (EPA 1993). This value is based upon a chronic inhalation study in rats. Rats were exposed intermittently to methylene chloride in air for 2 years. The NOAEL was 694.8 mg/m^3, and an uncertainty factor of 100 was applied to obtain the R_fD. The subchronic inhalation R_fD is also 0.86 mg/kg-day (EPA 1993).

The EPA weight-of-evidence classification for human carcinogenicity is "B2"—probable human carcinogen (EPA 1993). Methylene chloride has been shown to induce increased incidence of hepatoceullar neoplasms and alveolar/bronchiolar neoplasms in male and female mice, and increased incidence of benign mammary tumors in both sexes of rats, salivary gland carcinomas in male rats and leukemia in female rats. An oral slope factor of 7.5×10^{-3} (mg/kg-day)$^{-1}$ (EPA 1993) calculated as the arithmetic mean of slope factors derived from an inhalation mouse study, and an oral/drinking water study in mice has been established. An inhalation slope factor of 1.6×10^{-3} (mg/kg-day)$^{-1}$ (4.7×10^{-7} (μg/m^3)$^{-1}$ (EPA 1993) has been established, based upon the induction of ademoas and carcinomas (liver and lung) in mice following inhalation exposure.

N.39 METHYLPHENOL, 4-

The following toxicity profile has been excerpted from TRC 1994:

The chronic oral R_fD for 4-methylphenol is 5×10^{-3} mg/kg-day (EPA 1993), and is based on a gavage study done in pregnant rabbits. The rabbits were given 5 mg/kd-day 4-methylphenol on getsation days 6–18. The critical effect was maternal death. An uncertainty factor of 1,000 was applied to obtain the R_fD. The subchronic oral R_fD is 5×10^{-2} mg/kg-day (EPA 1993), and is based on an uncertainty factor of 100. Inhalation R_fDs are not available (EPA 1993). The oral R_fDs have been cross-assigned to inhalation.

The EPA weight-of-evidnece classification for the carcinogencity of this compound is "C"—possible human carcinogen based on increased incidence of skin papillomas in mice in an initiation-promotion study (EPA 1993). A quantitative estimate of carcinogenic risk from oral or inhaltion exposure is not available (EPA 1993).

N.40 NAPHTHALENE

Naphthalene ($C_{10}H_8$, MW 128.2, CAS registry number 91-20-3) is produced from either coal tar or petroleum. The principal end use for naphthalene, which is being replaced by o-xylene, was in the production of phthalic anhydride. Other major uses are for carbamate insecticides, surface active agents and resins, as a synthetic tanning agent, moth repellent, and in miscellaneous organic chemicals. Naphthalene is also formed during the combustion of fossil fuels, and discharged into water as a result of coal tar production and distillation processes.

N.40.1 Cancer

The carcinogenicity of naphthalene has not been classified by the EPA (1993h).

N.40.1.1 Epidemiologic Data in Humans

Wolf (1976) reported four cases of laryngeal carcinoma, one case of gastric carcinoma, one case of colon carcinoma, and a case of lupus erythematosus of the cheek among 7 of 15 employees involved in naphthalene manufacture in the former East Germany. Laryngeal cancer was also observed in 4 of 15 workers at a naphthalene distillation plant (Wolf 1978). It was not reported whether these workers were also smokers. The incidence of laryngeal cancer in these distillation plant workers is approximately 4,000 times greater than the general incidence of laryngeal cancer in the former East Germany. Kup (1978) studied cancer patients, four of whom had developed laryngeal cancer and were exposed to naphthalene occupationally. He suggested that most of the cancers were not work-related, since most of the workers were smokers.

N.40.1.2 Experimental Studies in Animals

Inhalation Exposure

NTP (1992) recently completed a 2-year study with $B6C3F_1$ mice exposed to atmospheres containing 0, 10, or 30 ppm of naphthalene for 6 hours daily, 5 days per week, for 104 weeks. No increase in tumor incidence related to naphthalene administration was observed in male mice. In females, the incidence of pulmonary alveolar/bronchiolar adenomas was significantly greater in the high dose group than in the controls, and one additional high dose female developed an alveolar/bronchiolar carcinoma. The combined incidence of alveolar/bronchiolar adenomas and carcinomas in the high dose females was greater than the incidence for historical

controls of the same mouse strain. These lung tumors were attributed to naphthalene exposure and naphthalene was classified as exhibiting some evidence of carcinogenic activity via inhalation exposure (NTP 1992).

Oral Exposure

No carcinogenic activity or toxicity was observed in rats given a total of 10 grams of naphthalene over a 700-day period (Schmahl 1955).

Dermal Exposure

A dermal study in which 1,4-naphthoquinone, a naphthalene metabolite, was administered topically to rats resulted in skin papilloma incidences of 15 percent to 20 percent in treated animals; some of these papillomas developed into malignant epitheliomas (Takizawa 1940). Levels of naphthalene producing systemic toxicity in a rabbit study via dermal application did not induce carcinogenic activity (Bogdat'eva and Bid 1955).

Other Exposure Routes

No carcinogenic activity was observed in rats given 820 mg subcutaneously or intraperitoneally over a 40-week period (Schmahl 1955). No controls were used in this study.

N.40.2 Mutagenicity

Data from numerous genotoxicity studies indicate that naphthalene is nonmutagenic in *Salmonella typhimurium* assays, with or without metabolic activation (e.g., Anderson and Styles 1978; Narbonne et al. 1987; Bos et al. 1988; NTP 1992). However, in cytogenetic tests conducted by NTP (1992) with Chinese hamster ovary cells, naphthalene induced sister chromatid exchanges with and without metabolic activation, as well as significant increases in chromosomal aberrations with metabolic activation.

N.40.3 Toxicity

N.40.3.1 Epidemiologic Data in Humans

Acute toxicity effects of naphthalene inhalation in humans include headache, confusion, eye irritation, nausea, profuse perspiration with vomiting, optic neuritis, hematuria, and edema. Cataracts were diagnosed in 8 of 29 chemical plant workers occupationally exposed to high doses of naphthalene for 5 years (Ghetti and Mariani 1956). Naphthalene ingestion had resulted in abdominal pain, nausea, vomiting, diarrhea, urine darkening, bladder irritation, jaundice, anemia, and hyperthermia (Gerarde 1960).

N.40.3.2 Experimental Studies in Animals

Systemic Toxicity

In a 2-year chronic inhalation study, naphthalene was administered at concentrations of 10 and 30 ppm, 6 hours daily, 5 days weekly for 104 weeks (NTP 1992). Nonneoplastic lesions were observed in the nose and lungs of mice of both sexes. In the nose, naphthalene exposure was associated with an increase in the incidence and severity of chronic inflammation, metaplasia of the olfactory epithelium, and hyperplasia of the respiratory epithelium. Chronic lung inflammation was also associated with chronic exposure to naphthalene.

Daily oral administration of 1 g/kg to rabbits produced degenerative changes in the lens of the eye; within 2 weeks, the whole lens became cataractous (Potts 1986). A review of the literature on cataract formation in rodents and rabbits resulting from naphthalene administration (Van Heyningen and Pirie 1976) demonstrated that different strains of rats, mice, and rabbits showed differences in the metabolic pathways for naphthalene and that only some strains were susceptible to cataract formation resulting from naphthalene oral administration at high doses.

Hemolytic anemia was observed in dogs given single oral doses of 3-9 g of naphthalene (Zuelzer and Apt 1949). All hematological values returned to normal 50 days after administration.

Pulmonary necrosis was observed in rats and mice given intraperitoneal injections of naphthalene. Mice given a single intraperitoneal injection of 0.5, 1, or 2 mmol/kg showed dose-related necrosis of the bronchiolar epithelium (Mahvi et al. 1977). This lesion was reversible, and regeneration occurred after 7 days. Naphthalene accumulated in the lungs of rats and mice after a single intraperitoneal injection (Reid et al. 1973). Rats appear to be less susceptible to naphthalene toxicity than mice when exposure is intraperitoneal, a difference attributed to variation in the metabolic rate of the two species (O'Brien et al. 1985).

Naphthalene inhibited aryl hydrocarbon hydroxylase activity in liver homogenates and microsomal preparations obtained from rats given 40 mg/kg intraperitoneal injections for 3 days (Alexandrov and Frayssinet 1973). A single 250 mg/kg intraperitoneal dose of naphthalene to mice depressed enzyme activity of lung microsomal monooxygenase; however, liver enzyme activity was not affected (Tong et al. 1982).

Developmental/Reproductive Toxicity

No studies have been located that investigated the developmental or reproductive toxicity effects of naphthalene exposure.

Other Systemic Effects

Experimental animal data assessing other systemic effects have not been located.

N.40.4 Toxicokinetics

Little information is available regarding the toxicokinetics of naphthalene in humans by any route of exposure. It is clear that humans may absorb naphthalene by pulmonary, gastrointestinal, and dermal routes; however, the rate and extent of this absorption is unknown (ATSDR 1989a). Available information on the metabolism of naphthalene has come from studies using intraperitoneal administration and *in vitro* assays. The key metabolites in mammalian species, including humans, are: 2-naphthoquinones, which can cause hemolysis (Mackell et al. 1951); 1,2,-naphthoquinones, which have been implicated in cataract formation (Rees and Pirie 1967); and 3 glutathione adducts arising from naphthalene-1-2-oxides, which are believed to be involved in pulmonary toxicity following intraperitoneal injection (Buckpitt et al. 1984). Little information is available about the excretion of naphthalene.

N.40.5 Toxicity Values

The chronic and subchronic oral R_fD for naphthalene was 4×10^{-2} mg/kg-day (EPA 1992, as cited in TRC 1994). These oral values were withdrawn in the November supplement of the 1992 HEAST; for the purposes of this risk assessment, these values will be used per verbal guidance from EPA Region I (TRC 1994). In the absence of inhalation R_fDs, these oral R_fDs will be cross-assigned to inhalation (TRC 1994).

Naphthalene has been tested in studies capable of detecting the ability to cause cancer; however, all but one study showed no such evidence. In the 2-year NTP study of chronic toxicity and carcinogenicity (NTP 1992), a statistically elevated incidence of lung alveolar/bronchiolar adenomas at the high dose level was observed in female mice at the highest dose tested. This study provides weak, possibly questionable, evidence of carcinogenicity, because (a) only one sex showed the tumorigenic effect; (b) only one tumor type (benign) was observed; (c) no dose-response existed since the tumors were present only in the group receiving the highest dose; and (d) the strain of mice used in the study typically exhibits high spontaneous rates of lung adenomas. These data are unlikely to prove adequate for the estimation of a CPF, according to EPA cancer risk assessment guidelines (EPA 1986c).

N.41 PHENANTHRENE

Phenanthrene ($C_{14}H_{10}$, MW 178.2, CAS registry number 85-01-8) is a PAH that, in pure form, exists as monoclinic plates recrystallized from ethanol. Phenanthrene is virtually insoluble in water and is soluble in organic solvents such as benzene, ethanol, and toluene. Phenanthrene

is a by-product of the incomplete combustion of fossil fuels, and has been detected in cigarette smoke, coal tar, engine exhausts, and charcoal-broiled steaks. Phenanthrene originates from natural sources, as well.

N.41.1 Cancer

Phenanthrene is not classified by EPA as a carcinogenic PAH; it has been assigned to category "D," based on no human evidence and inadequate data from experimental animal studies (EPA 1993j).

N.41.1.1 Epidemiologic Data in Humans

No studies have been found on the carcinogenicity of phenanthrene in humans.

N.41.1.2 Experimental Studies in Animals

There were inadequate data in experimental animal studies to evaluate the carcinogenicity of phenanthrene (IARC 1983).

Inhalation Exposure

No studies have been found that investigated carcinogenicity of phenanthrene by inhalation.

Oral Exposure

In a gavage study, single doses of 200 mg phenanthrene (purity unspecified) dissolved in sesame oil were administered to 10 female Sprague-Dawley rats. No mammary tumors were detected within 60 days. A positive control group was administered 20 mg 7,12-dimethylbenzo(a)anthracene, and mammary tumors occurred in 100 percent of 700 animals (Huggins and Yang 1962).

Dermal Exposure

Six studies on the carcinogenicity of phenanthrene were found that tested the initiating activity in mouse skin painting assays. Phenanthrene was shown to have initiating activity in only one study, none in four other studies, and did not have any promoting activity. Female CD-1 mice (30/group) received a single dermal application of 1.8 mg phenanthrene in benzene, followed by two weekly applications of TPA for 35 weeks (Scribner 1973). The tumor incidence of papillomas at 35 weeks was 40 percent in treated mice and 0 percent in TPA controls. Tumors did not occur, or were not significant relative to controls, in male Swiss albino Ha/ICR mice treated with a total dose of 1 mg of phenanthrene (LaVoie et al. 1981b), female CD-1 mice treated with 1.8 mg phenanthrene (Wood et al. 1979), albino mice given 1.2 mg phenanthrene (Roe 1962), and "S" mice given a total dose of 0.54 g (Salaman and Roe 1956).

Other Exposure Routes

Subcutaneous or intraperitoneal injections of phenanthrene (doses ranged from 40 to 140 μg/mouse) did not induce tumors (pulmonary adenomas, hepatomas, and skin papillomas) at increased incidences relative to vehicle controls (Roe 1962; Grant and Roe 1963; Buening et al. 1979a).

N.41.2 Mutagenicity

Phenanthrene has resulted in negative mutagenic response in bacterial and mammalian systems. In one assay, phenanthrene was mutagenic to *S. typhimurium* in the presence of a high concentration of an exogenous metabolic system (Oesch et al. 1981). It did not induce DNA repair, chromosomal aberrations, or sister chromatid exchange in cultured mammalian cells. Phenanthrene gave a positive response of sister chromatid exchange in Chinese hamster bone-marrow cells (Bayer 1978; Roszinsky-Kocher et al. 1979).

N.41.3 Toxicity

N.41.3.1 Epidemiologic Data in Humans

No studies have been located that investigated the toxicity of phenanthrene in humans.

N.41.3.2 Experimental Studies in Animals

No studies were located that investigated the systemic, developmental, or reproductive toxicity of phenanthrene in experimental animals. Because of the absence of sufficient toxicity data to characterize the toxicity of phenanthrene, pyrene was considered representative of the toxicity of phenanthrene.

N.41.4 Toxicokinetics

Although no data are available regarding the absorption of phenanthrene or any other PAH in humans following inhalation exposure, absorption of PAHs can be inferred from the presence of urinary metabolites of PAHs in workers occupationally exposed to these compounds (Becher and Bjorseth 1983). The high occupational concentration of PAHs, however, did not correspond to the amount of PAHs deposited, metabolized, and excreted in this study. The authors suggest that PAHs adsorbed to airborne particulate matter may not be bioavailable and that the dose-uptake relationship may not be linear over the entire PAH concentration range. Indirect evidence also suggests that benzo(a)pyrene may not be readily absorbed following ingestion in humans (Hecht et al. 1979), but is readily absorbed following oral administration in the rat (Yamazaki et al. 1987). Intestinal absorption of PAHs appears to be highly dependent on the presence of bile in the stomach (Rahman et al. 1986). Application of

2 percent crude coal tar to the skin of humans for 8-hour periods on 2 consecutive days showed evidence of PAH absorption of pyrene, as well as other non-carcinogenic PAHs (Storer et al. 1984).

The lipophilicity of PAHs enables them to readily penetrate cellular membranes and remain in the body indefinitely; however, the metabolism of PAHs alters these chemical compounds both structurally and chemically, and renders them more water-soluble and hence more excretable. Metabolism of PAHs occurs in all tissues. The metabolites of phenanthrene include the 1,2-, 3,4-, and 9,10-dihydrodiols and have been detected in urine following intraperitoneal administration of phenanthrene in rats and rabbits (Boyland and Wolf 1950; Boyland and Sims 1962) or *in vitro* following incubation with an exogenous activating system (Sims 1970; Chaturapit and Holder 1978; Nordqvist et al. 1981). The dihydrodiols can be further oxidated to diol-epoxides, such as 1,2-diol-3,4-epoxide. These metabolites have little tumor initiating activity, but are mutagenic to bacteria and cells (Wood et al. 1979).

The excretion of phenanthrene has been demonstrated by detection of urinary metabolites following exposure. These dihydrodiol metabolites also conjugate with glucuronic acid and have been detected in the urine of experimental animals (Boyland and Wolf 1950; Boyland and Sims 1962).

N.41.5 Toxicity Values

Insufficient data exist to derive toxicity values (i.e.,R_fD or R_fC) for phenanthrene. Toxicity values for pyrene, a sturcturally similar analogue, were used in this risk assessment.

N.42 POLYCHLORINATED BIPHENYLS (PCBs)

Polychlorinated biphenyls (PCBs) are a family of related, man-made chemicals, with 209 possible congeners of the base biphenyl molecule. The manufacture of PCBs in the United States stopped in 1976, but their protracted environmental and biological persistence remains a problem.

Due to two accidental exposures to relatively large human population groups, as well as numerous occupational exposure studies, a great deal of information has been accumulated about the toxicity of PCBs in humans. Similarly, the environmental persistence of PCBs has led to a large body of data on the field and laboratory toxicity of PCBs to ecological receptors.

N.42.1 Cancer

PCBs are classified by both EPA and IARC as a Class B2 carcinogen, based on sufficient animal data and inadequate human data (EPA 1993k; IARC 1987). Although a fair amount of human epidemiological data exists, no one study is adequate for purposes of carcinogenic

classification, thus, the CPF is based on an oral feeding study in rats. However, WHO (IPCS 1993) has concluded that the complication of PCDF co-contamination of PCB mixtures limits any conclusion about purely PCB tumor promotion.

N.42.1.1 Epidemiologic Data in Humans

There is evidence from a limited number of general population and occupational epidemiological studies that exposure to polychlorinated biphenyls (PCBs) can result in cancers of the liver, gastrointestinal tract, gall bladder, and respiratory tract. However, no single study satisfies enough of the necessary experimental design and/or statistical criteria in order for a definitive determination to be made. In addition, in none of the studies were the exposures restricted to a single Aroclor mixture without polychlorinated dibenzofuran (PCDF) co-contamination known or suspected to have been present, and none of the PCB congeners were identified.

The single factor contributing to the complexity of the PCB literature is the complexity of the commercial products themselves. Although there are 209 theoretical PCB congeners only about 130 congeners have been identified in commercial mixtures and residues (Hansen 1987a). Current analytical methodology can now identify the individual congeners in environmental and biological samples, but these methods have yet to be employed in any human epidemiological studies (Safe et al. 1987).

In the accidental exposures that occurred to the general population in the "Yusho" incident in Japan in 1968, ingestion of rice oil contaminated with about 1,000 mg/kg of a 48 percent chlorinated PCB (Kanechlor 400), which also contained about 5 mg/kg of PCDFs, resulted in a total of 41 cancer deaths out of a total of 120 deaths (35.4 percent) by 1983, versus the 21.1 percent expected in that region (Ikeda et al. 1987). A statistically significant excess mortality was observed for malignant neoplasms and cancers of the liver and respiratory tract in males. Recently, advances in the analytical methodology for determination of PCB congeners and PCDF co-contaminants (Safe et al. 1987) has led to the conclusion that, in the Yusho incident, the PCDF and the co-planar PCB congeners (i.e. those with *para*-, at least one *meta*-, and no *ortho*-chlorine on each biphenyl ring) were the major, if not exclusive, chemicals responsible.

A retrospective mortality study (Bertazzi et al. 1982, 1987) involved 2,100 capacitor manufacturing workers studied for the 1946-1982 time frame. They were exposed to Aroclor 1254, Pyralene 1436 (54 percent chlorine), and Pyralene 3010/3011 (42 percent chlorine). Workplace air measurements showed Aroclor 1254 levels at 5200–6800 $\mu g/m^3$ in 1954 and Pyralene 3010 at 48–275 $\mu g/m^3$ in 1977. Surface and hand wipe samples reflected considerable exposure potential via the dermal and direct ingestion pathways. There was a statistically significant increase in total (male and female) cancer deaths (26 observed versus 12.9 expected), and in gastrointestinal cancer deaths in males (6 observed versus 2.2 expected), and hematological cancer deaths in females (4 observed versus 1.1 expected).

Two other retrospective mortality studies (Brown and Jones 1981; Brown 1987) looked at a total of 2,588 capacitor manufacturing workers in two plants. Exposures were to Aroclors 1254, 1242, and 1016. Interestingly, total mortality (n = 295) was less than expected (n = 318), and cancer mortality (n = 62) was also less versus the expected (n = 80). However, cancer deaths of the liver, gall bladder, and biliary tract were higher than expected (5 observed vs. 1.9 expected). Although statistical significance was not achieved due to the low number of deaths, the higher liver and biliary tract cancers were seen in the plant with the higher PCB air concentrations (630–850 $\mu g/m^3$ versus 24–393 $\mu g/m^3$).

Several other epidemiological studies have looked at PCBs and cancer, but all have significant limitations. Zack and Musch (1989) studied 89 workers exposed to unspecified PCBs. They found elevated total cancers (8 versus 4.4 expected) and elevated lung cancers (4 versus 1.44 expected). However, they did not control for multiple chemical workplace exposures. Bahn et al. (1976) found 2 malignant melanomas versus the 0.04 expected in a small worker cohort (n = 31). Gustavsson et al. (1986) studied 142 male workers exposed to 42 percent chlorinated PCBs and 1400 $\mu g/kg$ PCDFs for a mean duration of 6.5 years at air concentrations of 0.1 $\mu g/m^3$ PCB. They found 21 deaths and 7 cancer deaths, which were at the expected level for that region. Davidorf and Knupp (1979) evaluated the relationship between PCB exposures and ocular melanoma in Ohio from 1967 to 1977 and found no correlation. Hansen (1987a) reported on a small set of diary farm families chronically exposed to PCBs via a PCB-contaminated coating (cumar) used in the farm silos. Four cancers were reported (pituitary, cervical, liver, and respiratory adenocarcinoma).

IARC (1987) concluded that the available evidence for PCB-induced carcinogenicity in humans was limited. As association between hepatobiliary cancers and PCB exposures is suggested, but the numbers of people exposed is small, no dose-response relationships could be evaluated, and the role of other co-contaminants (e.g., PCDFs) could not be excluded, thus limiting any conclusions.

N.42.1.2 Experimental Studies in Animals

Inhalation Exposure

No studies have been found that investigated the exposure of PCBs by inhalation in experimental animals.

Oral Exposure

Only a limited experimental animal data set exists for evaluating the potential carcinogenicity of PCBs. There are several major limitations that reduce the strength of any conclusive determination about PCB carcinogenicity in animals in most studies. First, all of the available studies have utilized mixtures (Aroclor, Kanechlor, Clophen) without analytical specification of the PCB congeners present. Thus, the well-known variability of PCB components across

batches and mixtures has not been controlled for. Second, metabolic activation of hepatic microsomal monooxygenases by PCBs is higher in females than males and in the young versus adult members of the species tested. This bias has not been controlled for in the age and sex of the test animals. Thirdly, the amount of PCDF co-contamination of the PCB mixtures has not been specified, nor controlled for.

Nagasaki et al. (1972) found that mice fed 500 ppm (15–25 mg/kg body weight) of Aroclor 1260/Kaneclor 500 (54 percent chlorinated) resulted in hepatocellular adenomas and/or carcinomas, but that mice fed Kanechlor 400 and Kaneclor 300 (42 percent chlorinated) did not develop any tumors. Kimbrough et al. (1972) observed bladder cancers in rats (n=2) fed 100 ppm of Aroclor 1260 for 8 months. Kimbrough et al. (1975) reported the development of hepatocellular carcinomas in female rats fed 100 μg/gm body weight for 21 months.

Allen and Norback (1973) reported the induction of hyperplasia and dysplasia of the gastrointestinal tract in male and female rhesus monkeys fed 300 ppm Aroclor 1248 for 3 months. Although the short-term nature of this experiment did not allow for an evaluation of the carcinogenic potential of PCBs, it was believed that the increased cellularity, abnormal dysplastic growth pattern, and invasion of adjacent tissue region were strongly suggestive of an eventual neoplastic transformation.

Norback and Weltman (1985) conducted the most complete study to date. Rats were fed 100 μg/gm body weight of Aroclor 1260 for 16 months, followed by 50 μg/gm body weight for an additional 8 months. In the PCB-exposed group, 95 percent of the female rats and 15 percent of the males developed hepatocellular neoplasms. The liver tumors were not aggressive (i.e., metastatic), since mortality was not effected. This study serves as the basis for the EPA's classification of PCBs as Class B2 carcinogens. The major weakness in this study is the lack of any characterization about the presence or absence of any PCDF co-contamination.

IARC (1987) concludes that the oral feeding studies in animals are sufficient to conclude that PCB exposure results in benign and malignant liver neoplasms in mice and rats. However, WHO (IPCS 1993) reaches a different conclusion. The conclusion reached by IPCS is that the potential for human liver cancers cannot be reliably predicted from the available animal data. It was believed that, while the role of PCBs as tumor promoter in animals was substantially evident, the complication of PCDF co-contamination remains a major limitation to any conclusion about PCB tumor promotion, *per se*.

Dermal Exposure

No studies have been found that investigated dermal exposure of PCBs in animals.

Other Exposure Routes

No studies have been found that investigated any other exposure routes of PCBs in animals.

N.42.2 Mutagenicity

There are two sources of data on the potential mutagenicity of PCBs: *in vivo* and *in vitro* studies. The results of these are seemingly contradictory. In the *in vitro* hepatic microsomal cytochrome P-450 monooxygenase test system, PCBs are well-known metabolic activators. Thus, pre-treatment of hepatocytes with PCBs seems to provide the metabolic activation that many initiator carcinogens require to demonstrate enhanced mutagenicity. On the other hand, *in vivo* studies indicate that PCBs can inhibit the initiation of carcinogenesis by the same initiator chemicals showing enhanced mutagenicity by PCBs *in vitro*. The reason for this most likely lies in the significant differences in metabolic activity (sources and pathways) occurring between the hepatic microsomal subcellular fractions versus that metabolic activity occurring in the intact hepatic cell. The general conclusion, based on *in vitro* subcellular fraction studies, that low levels of PCBs can act as co-carcinogens by acting as promoters of mutagenicity is almost certainly an overstatement about the extent to which the available data support this conclusion.

N.42.3 Toxicity

N.42.3.1 Epidemiologic Data in Humans

Acute Systemic Toxicity

Short-term exposures to PCBs result primarily in dermal and ocular symptoms (IPCS 1993). Skin rashes, burning sensations, irritation, smarting, and sweating are reported within a few hours after exposure. Painful irritation of the ocular conjunctiva is a consistently reported symptom. These symptoms usually diminish after some time, following removal from the source of PCB exposure.

In some cases of very high concentrations (10–16 mg/m^3) with exposures of several hours, a delayed acute reaction sets in with a latency of several weeks to months. These dermal symptoms consist of hyperpigmentation, especially in the facial area and around the eyes, ridges on the fingernails, and acne vulgaris. These late sequelae can last from months up to several years.

Chronic Systemic Toxicity

There have been two PCB poisoning events that affected large numbers of people in the general population. The first of these occurred in Japan in 1968 and is called the "Yusho" incident. The second occurred in Taiwan in 1979 and is referred to as the "Yu-Cheng"

accident (IPCS 1993). Both incidents were due to the contamination of rice bran oil during the manufacturing process by leaks from heat exchange units. The other main source of data on chronic PCB intoxication comes from a series of occupational exposure studies on workers exposed in capacitor manufacturing plants, as well as studies on utility workers and railroad workers.

In the Yusho case, the rice oil had 1000 mg/kg levels of PCBs and approximately 5 mg/kg of PCDFs. Approximately 2,000 men, women, and children were eventually diagnosed with PCB poisoning. The estimated intakes were 633 mg PCBs and 3.4 mg PCDFs. Blood PCB levels were taken 5 years after the exposures, and were 6–7 μg/L versus 3 μg/L in the general population (Masuda et al. 1974). In the Yu-Cheng incident, 2,061 people were determined to have PCB intoxication with the estimated intakes of 0.7–1.84 gm of PCBs and 3.8 mg of PCDFs. Blood PCB levels were taken within 1 year of exposure and averaged about 39 μg/L, and the mean blood PCDF levels were 0.076 μg/L (Chen et al. 1985). Initially after exposure, blood PCB levels ranged from 3–1156 μg/L and dropped to 12–50 μg/L 6 months later. Of the 613 patients studied, 44.3 percent had levels of 51–100 μg/L, and 27.6 percent had levels over 100 μg/L. The blood PCDF levels at six months ranged from 0.062–0.24 μg/L.

PCB intoxication in both the Yusho and Yu-Cheng cases initially resulted in hypersecretion of the Meibomian (tear) glands of the eyes, swelling of the eyelids, hyperpigmentation of the nails and mucous membranes, fatigue, nausea, and vomiting. These were later followed by hyperkeratosis and darkening of the skin, follicular enlargement and acneform eruptions, chloracne, oedema of the extremities, liver enlargement and elevated blood serum triglycerides, bronchitis and other respiratory problems, some central nervous system effects (e.g., numbness of the legs), and suppression of the immune system (i.e., decreases of serum IgA and IgM). Most of the clinical symptoms in adults dissipated over time, with only a few patients still having extensive chloracne 15 years after the accident.

A very small, but extremely exposed population group, is dairy farm families whose silos were coated with PCB-containing cumar and consumed their own dairy products and meat (Hansen 1987b). The small sample size (n = 12–15) limits any definitive conclusions, but clear correlation between blood serum PCB levels and various clinical symptoms was found. These symptoms included severe fatigue in most cases, severe libido reduction, chronic skin rashes, leg and joint pains, gastric ulcers, and cancers.

Numerous occupational exposure studies have evaluated chronic workplace exposures to PCBs. Ouw et al. (1976) studied 34 workers who were exposed for periods from 1 month to 23 years to pure Aroclor 1242 at air time-weighted-average (TWA) concentrations of 0.32-2.22 mg/m^3. Clinical symptoms included dermal burning around the eyes, face and skin, rashes, chloracne, and a persistent body odor. A positive correlation was found between blood serum PCB levels and the reporting of dermatological problems. Interestingly, no dermatological problems were found in workers with blood serum PCB levels below 200 ppb.

This latter fact is supported by the work of Baker et al. (1980a) who evaluated PCB-contaminated municipal sludge in landfarming. Although serum triglyceride levels were positively correlated with serum PCB levels, no dermatological symptoms were observed at the highest exposed group (mean blood serum PCB = 75 ppb). However, Maroni et al. (1981) found that, out of a worker group of 80, 16 had test results indicating liver problems. Of that group that had demonstrable liver dysfunction, 20 percent had blood serum PCB levels below 200 ppb (131 ppb, 152 ppb, 180 ppb). Thus, it would appear that for a 42 percent chlorine PCB exposure, the threshold for liver and skin symptoms lies between 100–200 ppb PCB in blood.

Fischbein et al. (1979) studied 326 capacitor manufacturing workers exposed for periods ranging from less than 5 years to over 25 years to Aroclors 1016, 1221, 1242, and 1254. TWA 8-hour air concentrations ranged from 0.007 to 11.0 mg/m^3. A high prevalence (45 percent in males; 55 percent in females) of wide-spread dermatological problems (skin rashes, chloracne, comedones, and burning sensations) was found. Upper respiratory irritation, rectal weakness, and gastrointestinal and neurological problems were also reported. Although there was a positive correlation between plasma PCB levels and elevated SGPT levels, there was no significant liver damage reflected in tests.

Developmental Toxicity

Children born after maternal exposure in the Yusho incident had diminished growth, hyperpigmentation of the skin and mucous membranes, gingival hyperplasia, abnormal calcification of the skull, rocker bottom heel, and a high incidence of low birth weight (IPCS 1993). Six years after birth, 117 Yu-Cheng children were examined (Rogan et al. 1987). As compared to controls, the Yu-Cheng children were shorter and weighed less, had more frequent abnormalities of the gingiva, skin, nails, teeth, and lungs. They showed delay in developmental milestones, deficits in formal development testing, and abnormalities in behavioral assessment. Among nine Yu-Cheng girls, four had congenital absence of their permanent teeth germs. Among nine Yu-Cheng boys, one did not (Lan et al. 1989). Kuratsune et al. (1972) followed 42 Yusho children for 3 years after the incident and found that boys had decreased height and weight, as compared to controls, but girls did not.

Hara (1985) studied capacitor workers and their children. The PCB exposures were to Kanechlor 300 and 500. PCB levels in blood (up to 120 $\mu g/L$) were 2-3 orders of magnitude higher than controls. Breast milk PCB levels ranged from 50 $\mu g/L$ up to about 400 $\mu g/L$. Blood PCB levels were correlated with the duration of PCB handling and breast milk PCB levels. Blood PCB levels in children were higher in the children who were breast-fed longer. Some of the children who were breast fed for a longer time had clinical symptoms similar to Yusho children (i.e., itchy skin, eczema, red eye, fever, catching colds, etc.).

Several other studies have looked at developmental effects of PCBs. Smith (1984) evaluated 62 babies who were breast-fed and 11 who were bottle-fed. The mean maternal serum PCB

level was 5.76 μg/L (range = 1.3–14.9 μg/L), and the mean breast milk PCB was 1.13 mg/kg (on a fat basis). The mother's blood serum PCB levels were positively correlated with the number and type of infectious illnesses during the first 4 months of life. Gladen et al. (1988) found that higher transplacental exposure to PCBs was associated with lower psychomotor scores at both 6 and 12 months after birth, but this was not seen in breast-fed infants.

Reproductive Toxicity

Wassermann et al. (1982) evaluated the relationship between blood PCB levels and premature deliveries. A significant difference was found between the blood PCB levels in normal versus premature delivery mothers. Splitting the premature deliveries into a low (9/17) and a high (8/17) serum-PCB group demonstrated that the high blood PCB group had a significantly higher blood PCB level (mean = 128 μg/L) versus the other two groups (premature/low blood PCB = 21.4 mg/L; normal = 19.3 μg/L). In the high-PCB/premature group, the mean serum concentration of tetrachloro-isomers was slightly lower than the normal group (0.6 versus 1.86 μg/L), while the pentachloro- and hexachloro-isomers were higher than the normals (78.2 versus 15.7 μg/L and 48.9 versus 1.72 μg/L, respectively).

Taylor et al. (1984, 1989) studied the relation of Aroclor 1016, 1242, and/or 1254 to gestational age and birth weight. A mean birth weight deficit of 153 grams was seen in 39 infants born to mothers working in two capacitor plants, relative to 337 infants from mothers without occupational PCB exposure. A mean gestational age deficit of 6.6 days was also found. Although several critical variables were not controlled for (smoking, alcohol consumption, socioeconomic status), it was concluded that the lower birth rate was due to the shortened gestational period.

Other Systemic Effects

Immunotoxicity. Immunological function was found to be impaired in both the Yusho and Yu-Cheng patients (Lu and Wu 1985; Nakanishi et al. 1985). In the Yusho patients, there was an early suppression of IgA and IgM in the blood serum which eventually returned to normal. As with the Yusho patients, the Yu-Cheng patients experienced many types of infections, most frequently in the respiratory tract and skin, and accompanied by decreases in IgA and IgM, but not IgG. There were decreased total T-cells, active T-cells and helper T-cells, suppression of delayed type response to recalling antigens, among other effects. IgA and IgM levels returned to normal within 2 years, even though the respiratory infections continued.

Respiratory System. Except for several cases of persisting chloracne, chronic bronchitis remained the most long-lasting major clinical problem for all of the Yusho and Yu-Cheng patients (Nakanishi et al. 1985). It was found that the PCBs spread evenly throughout the lung parenchyma, and were located preferentially in the Clara cells of the bronchioles. This is now believed to be the result of the biotransformation of certain PCB congeners into methyl sulfone

PCB metabolites and the affinity of bronchial peptides for these conjugates (Hansen 1987b). It is these persistently bound PCB metabolites that are presumed to cause the chronic bronchitis in both general population and occupationally exposed individuals.

Neurotoxicity. Both acute and chronic exposures to PCBs have been reported to cause neurological and unspecific psychological and/or psychosomatic problems (Hara 1985; Hansen 1987b). These latter symptoms include headache, dizziness, nausea, depression, loss of energy, sleep and memory problems, nervousness, and impotence. Within 1 year of the Yu-Cheng incident, 110 patients were studied neurologically. The mean blood PCB level was 39.3 ± 17 μg/L, with the mean blood PCDF level at 0.076 ± 0.04 μg/L. Both the sensory and motor nerve conduction velocities were significantly lower than controls (Chen et al. 1985b). Out of the 2,000 patients from the Yu-Cheng incident, 35 were studied neurologically, and no relationship was seen in blood PCB levels between patients with and without neurological problems. Both sensory and motor nerve conduction velocity were depressed, the latter by 1/3 to 1/2 of controls (Chia and Chu 1984).

N.42.3.2 Experimental Studies in Animals

Acute Systemic Toxicity

The acute toxicity of PCBs is generally fairly low, especially in terrestrial organisms. The adverse effects of PCBs varies with the percentage composition of the specific isomers, their stereochemical orientation, the presence of impurities (e.g., PCDFs), the animal species involved, and the route of exposure. In animals, the LD_{50}s increase with increasing chlorination. The young are more sensitive than adults, a factor that has not been adequately addressed in many of the toxicity tests. In rats, the LD_{50}s range from 3980 mg/kg for Aroclor 1221 up to 10,000–11,000 mg/kg for Aroclor 1260 (Fishbein 1974). A typical LD_{50} for the young of a species might range from 1,300–2,500 mg/kg versus 4,000–11,000 mg/kg for an adult. There is also considerable variation within and between species, with the rhesus monkey and guinea pig being very sensitive, the cynomolgus monkey and rabbit next, followed by the rat. In general, rats and fish are less sensitive to the lower chlorinated PCBs, while birds tend to be less sensitive to the higher chlorinated PCBs (Hansen 1987a). It is important to point out that lethality has been observed in animals which have accumulated high residues of PCBs and then subjected to stressful conditions. Thus, the high LD_{50}s may well underestimate the acute toxicity of PCBs under conditions of stress.

Chronic Systemic Toxicity

Some general conclusions can be stated. A dose of PCBs delivered over time produces greater toxicity than the same amount delivered in a single dose. There is a latency period for PCB effects to be manifested, and there can be both early and delayed effects. The early effects can occur (at lethal doses) from 1 week (guinea pig) to 1 month (monkey). The early responses are probably due to a combination of the lower chlorinated PCBs and any PCDF co-

contamination, while the delayed responses (> 1 month) probably reflect the more persistent higher chlorinated PCBs. There is a dramatic difference in PCB toxicity across the species. The toxicity of PCBs is inversely related to drug metabolizing activity. Females of a species are more susceptible to PCB toxicity than males and the young more susceptible than the old, while drug metabolizing activity is higher in the males and increases with age.

In general, all species of fish tested so far have a very low biotransformation potential, birds are intermediate, and mammals have the highest. Many of the chronic toxicity tests done on experimental animals under controlled conditions have reported low toxicity. However, because of the immune system deficits that PCBs can induce, stress becomes an important variable that has yet to be systematically addressed in chronic feeding studies (Hansen 1987b).

Reproductive/Developmental Toxicity

There are many, in the field and in the laboratory, which definitively implicate PCBs in both reproductive and developmental toxicity (Hansen 1987a). These effects range from decreased libido and sperm count and motility to embryo/fetal mortality and overt teratogenesis. Because of the environmental ubiquity and persistence of PCBs, they have been documented to have significant deleterious effects on whole ecological populations (e.g., common terns, grey seals, English sole, beluga whales). As previously discussed, stress can potentiate the effects of PCBs. Reproduction is clearly a stressful condition, and the effects of chronic PCB intoxication may be manifest in the wide-spread reproductive toxicity that has been documented.

N.42.4 Toxicokinetics

PCBs are highly lipophilic and, as such, readily cross the gastrointestinal membranes and pass into the blood stream. After entering the blood stream, PCBs are rapidly distributed to various tissues and organs, depending upon their respective blood flow perfusion rates. Because of its high blood flow rate, the liver receives a large fraction of the parent PCB early on and it converts PCBs to their metabolites depending upon the particular PCB congener (Lutz and Dedrick 1987). Phase I metabolism of the parent PCB occurs in the liver by the mixed fraction monooxidases, yielding hydroxylated products. The metabolites can be conjugated to glucuronides which are excreted via the bile into the gut lumen. Some of the metabolites formed enter the hepatic blood supply which returns to the blood pool and then redistribute to other tissues.

The rates of metabolism of PCBs are, to a major degree, determined by the degree of chlorination of the biphenyl ring and by the chlorine position on the ring. In general, the rate of metabolism (k_m) decreases with increasing chlorination. The *meta* and *para* positions appear to be the preferred sites for arene oxide formation, and since the arene oxides have been implicated as the reactive intermediate for the covalent binding of PCB to subcellular macromolecules, the more rapidly metabolized congeners may pose a greater threat of toxicity

than the more persistent, but more slowly metabolized, congeners. Phase I PCB metabolites are more bioactive, and may be 10 times more acutely toxic than the parent PCB compound (Hansen 1987b).

The pharmacokinetics of PCBs indicate a biphasic kinetic process, with rapid clearance from blood and accumulation in the liver and adipose tissues of various organs. Placental transport, fetal accumulation, and distribution to breast milk can occur. Mobilization from fat appears to depend primarily upon the rates of metabolism of the individual PCB congeners. Excretion depends on the metabolism of PCBs to more polar compounds, which are mostly excreted in the feces, although considerable amounts can be found in the urine. The biological half-lifes of PCBs can vary widely, depending upon the structure-dependent metabolism of the different congeners, tissue affinities, and factors influencing mobilization from storage sites.

N.42.5 Toxicity Values

PCBs have been reported to cause liver, lung, gastrointestinal tract, gall bladder, and respiratory tract cancer. None of these studies, however, is considered adequate for a definitive determination of their carcinogenicity in humans. Currently, PCBs are considered as class "B2" carcinogens, "a probable human carcinogen based on sufficient animal data and inadequate or no human data." EPA's current cancer potency factor is 7.7 $(mg/kg\text{-}day)^{-1}$ (EPA 1993k), and is based on a oral feeding study in rats (Norback and Weltman 1985). This value is used in this assessment to evaluate cancer risks for all PCB mixtures. It should be noted that EPA has withdrawn the IRIS cancer potency factor, and considerable controversy still exists as to whether the available data is sufficient to classify PCBs as carcinogenic (IARC 1987), or are insufficient to support such a classification (IPCS 1993).

EPA Region III lists an R_fD of 2×10^{-5} for Aroclor 1254 (EPA 1995). This R_fD will be used for the following Aroclors in this assessment: 1242, 1254, and 1260.

N.43 PYRENE

Pyrene ($C_{16}H_{10}$, MW 202.3, CAS registry number 129-00-0) is a polycyclic aromatic hydrocarbon that exists in its pure form as pale yellow plates. Pyrene is virtually insoluble in water, but is soluble in organic media such as benzene and toluene. Pyrene is formed during the incomplete combustion of fossil fuels and is also a component in fossil fuels. Pyrene has also been identified in cigarette and cigar smoke, engine exhaust, lubricating oils, and charcoal-broiled steaks.

N.43.1 Cancer

No studies have been located that assessed the potential carcinogenicity of pyrene from ingestion or inhalation. Chronic dermal application of a 10 percent pyrene solution to mice throughout their lifetime did not result in the development of skin tumors (Wynder and

Hoffmann 1959a). Pyrene has also been shown to be inactive as a tumor initiating agent (Scribner 1973; Van Duuren and Goldschmidt 1976). The carcinogenicity of pyrene has not been classified by the EPA (IARC 1983; ATSDR 1990).

N.43.2 Mutagenicity

No studies have been located on the potential mutagenicity of pyrene.

N.43.3 Toxicity

Systemic Toxicity

A subchronic oral toxicity study of pyrene showed evidence of mild nephropathy in the two highest dose groups when pyrene was administered by gavage to CD-1 mice for 13 weeks at doses of 0, 75, 125, or 250 mg/kg-day (EPA 1989f). The nephropathy was characterized by the presence of multiple foci of renal tubular regeneration, often accompanied by interstitial lymphocytic infiltration and foci of interstitial fibrosis. The lesions were described as minimal or mild.

Developmental/Reproductive Toxicity

No studies have been located that investigated the developmental or reproductive toxicity of pyrene in experimental animals.

Other Systemic Effects

No studies have been located that investigated any other systemic toxic effects of pyrene in experimental animals.

N.43.4 Toxicokinetics

No data have been located regarding the toxicokinetics of pyrene in humans following exposure to pyrene. A detailed discussion of the toxicokinetics of PAHs as a class of compounds is in Section **A.1.4** above.

N.43.5 Toxicity Values

When mice were given pyrene by gavage for 13 weeks, the only adverse effect observed was mild nephropathy characterized by minimal or mild kidney lesions and a reduction in kidney weights (EPA 1989f). Based on these findings and using uncertainty factors whose product is 3,000, the EPA (1993l) calculated an ingestion R_fD (chronic) of 0.03 mg/kg-day.

Since pyrene is toxic at organs distant from the portal of entry, the systemic dose is expected to govern its toxic potency. Consequently, a human NOAEL for pyrene by either inhalation or skin contact will be 0.03 mg/kg-day for use in this risk assessment; however, the systemic doses will be governed by the rate and efficiency of absorption at each portal of entry.

For other noncarcinogenic PAHs, noncarcinogenicity data are either absent or inadequate; pyrene will be used as a surrogate for these compounds: acenaphthylene, benzo(g,h,i)perylene, and phenanthrene. The data on these compounds are too limited to rank the relative toxic potency of these PAHs, as compared with pyrene. Therefore, the ingestion $R_fD$of 0.03 mg/kg-day for pyrene was used for the three noncarcinogenic PAHs listed above.

N.44 TETRACHLOROETHANE, 1,1,2,2-

1,1,2,2-Tetrachloroehtane is a man-made, colorless dense liquid with a penetrating, sweet, chloroform-like odor. It had been used extensively as a substance to produce other chemicals and as an industrial solvent, and was used in paints and pesticdes (ATSDR 1991).

N.44.1 Cancer

1,1,2,2-Tetrachloroethane is classified as a Class C, possible human carcinogen, based on incidence of hepatocellular carcinomas in mice and lack of human carcinogenicity data.

In a bioassay undertaken by NCI (1978) 50 each male and female Osborne-Mendel rats and B6C3F1 mice were gavaged with technical grade (90 percent pure) 1,1,2,2,-tetrachloroethane in corn oil, 5 days/week. Treatment was over 78 weeks, followed by observation periods of 32 weeks for the rats and 12 weeks for the mice. The high and low average doses (incorporating varying dosage levels throughout the treatment period) were, respectively, 108 and 62 mg/kg-day for male rats, 76 and 43 mg/kg-day for female rats, and 282 and 142 mg/kg-day for mice of both sexes. Control groups consisted of 20 animals/sex and species. Vehicle controls received corn oil at the same rate as the high-dose animals; untreated controls were not intubated. Of the high-dose female rats, 10 died within the first 5 weeks of the study, but the association between increased dosage and elevated mortality was not statistically significant for male rats. Significantly increased mortality was also evident in the high-dose mice of both sexes. No statistically significant incidence of neoplasms was observed in rats. A highly significant dose-related increase in the incidence of hepatocellular carcinomas was observed in both male and female mice.

N.44.2 Toxicity

A risk assessment for this compound is under review by an EPA work group.

N.44.3 Mutagenicity

1,1,2,2-Tetrachloroethane is mutagenic for the Salmonella typhimurium missense mutants TA1530 and TA1535 and selectively inhibits growth of E. coli polA (Rosenkranz 1977; Brem et al., 1974).

N.44.4 Toxicity Values

The inhalation unit risk is 5.8×10^{-5} $(ug/m^3)^{-1}$. The inhalation risk estimates were calculated from the oral exposure data. The unit risk should not be used if the air concentration exceeds 2×10^2 $\mu g/m^3$, since above this concentration the unit risk may not be appropriate.

N.45 THALLIUM

The following toxicity profile is excerpted from TRC 1994:

Thallium is one of the more toxic metals and can cause neural, hepatic and renal injury. It may also cause deafness and loss of vision. In some cases, deaths in humans have been reported as a result of long-term thallium intake. These cases are caused by the contamination of food or the use of thallium as a depilatory. The chronic oral R_fD for thallium carbonate is 8×10^{-5} mg/kg-day (EPA 1993) and is based on a gavage study in rats. Administration of 0.20 mg thallium/kg-day for 90 days in rats produced increased SGOT levels and serum LDH levels and alopecia. An uncertainty factor of 3,000 was used to obtain this R_fD. A subchronic oral R_fD of 8×10-4 (EPA 1993) was established using an uncertainty factor of 300. In the absence of inhalation R_fDs, oral RfDs have been cross-assigned to inhalation.

The EPA weight-of-evidence classification of the human carcinogenic potential of thallium is "D" (EPA 1993).

N.46 TOLUENE

Toluene (C_7H_8, MW 92.1, CAS registry number: 108-88-3). Toluene is a colorless volatile organic carbon which is moderately soluble in water. Although toluene occurs naturally in petroleum and the tolu tree, when encountered in the environment, it is most often of anthropogenic origin. Toluene is produced primarily from petroleum sources, although coal also serves as a minor secondary source. Toluene is used in the manufacturing of chemicals and plastics and as an additive to gasoline in order to increase octane ratings.

N.46.1 Cancer

Toluene has been classified by the EPA as a "D" (i.e., not classifiable as to human carcinogenicity) (EPA 1993m).

N.46.1.1 Epidemiologic Data

No epidemiology studies on the carcinogenicity of toluene in humans have been located.

N.46.1.2 Experimental Studies in Animals

Inhalation Exposure

Studies conducted by NTP (1990) exposed rats to dose levels of 30–1200 ppm and mice to dose levels of 120–1200 ppm, administered via inhalation for 5 days per week, 6 hours daily for 104 weeks. No evidence of increased tumorigenesis was observed in any of the treated groups of either species, as compared to controls. Thus, toluene may be classified as a noncarcinogen when administered via inhalation. A 2-year chronic bioassay conducted by CIIT (1980) exposed Fischer rats of both sexes to 0, 30, 100, or 300 ppm toluene via inhalation for 6 hours/day, 5 days/week for 106 weeks. No increase in tumors in the treated groups was observed among rats of both sexes, as compared with controls. The study is considered inadequate by EPA (1993m) because the highest dose administered is apparently well below the maximum tolerated dose for toluene (i.e. the animals could have easily tolerated higher inhalation exposures).

Oral Exposure

No studies have been located that investigated the potential carcinogenicity of toluene by oral administration.

Dermal Exposure

Several studies have examined the carcinogenicity of toluene in various strains of mice following repeated dermal application (Poel 1963; Coombs et al. 1973; Doak et al. 1976; Lijinsky and Garcia 1972). None of these studies, which ranged in duration from 50 to 104 weeks, demonstrated an increase in skin or systemic tumors. Dermally administered toluene markedly inhibits skin tumorigenesis in mice when benzo(a)pyrene is applied topically followed by application of phorbol-12-myristate-13-acetate (PMA) as a tumor promoter (Weiss et al. 1986). The authors hypothesized that the inhibitory action of toluene was related to suppression of PMA activity via competition for a PMA receptor site, or via interference with biochemical or morphological processes within the cell and cell membrane.

Other Routes of Exposure

No studies have been located that investigated the potential for carcinogenic effects by other routes of exposure.

N.46.2 Mutagenicity

Almost all available data indicate that toluene is neither mutagenic nor genotoxic. Toluene was nonmutagenic in *Salmonella* assays and *E. coli* assays, with and without metabolic activation, and non-genotoxic in *S. cerevisiae* studies (EPA 1993m). Cultured human lymphocytes exposed to toluene *in vitro* did not induce increases in chromosomal aberrations or sister chromatid exchanges. Several Russian studies (e.g., Dobrokhotov 1972; Lyapkalo 1973) reported that toluene was effective in causing chromosomal damage in bone marrow cells of rats; however, this finding was not evident in similar U.S. studies (Litton Bionetics 1981). It is possible that toluene used in the Russian studies contained impurities which may have induced the effect (EPA 1993m).

N.46.3 Toxicity

N.46.3.1 Epidemiologic Data

Toluene is a known respiratory irritant in humans and induces central nervous system (CNS) effects when exposure occurs chronically at high doses in occupational environments, or acutely at high concentrations. Foo et al. (1990) conducted a cross-sectional study involving 30 female workers exposed to toluene emissions from glue at an electronic assembly plant. Toluene levels from personal sample monitoring were reported as an 8-hour time-weighted average (TWA). Neither historical exposure values, nor concurrent exposures to other solvents, were documented. Workers in the exposed and control groups were matched on demographic and ethnic variables and on the use of medications; all were nonsmokers and none used alcohol. TWA toluene levels for exposed workers were 88 ppm (332 mg/m^3), whereas those for control workers were 13 ppm (49 mg/m^3). Both of these values are averages of the personal sampling monitors for each group. A battery of eight neurobehavioral tests administered to all exposed and control workers before the workers reported for duty indicated that exposed workers performed poorly on 6 of 8 tests, as compared with control group workers. Differences in performance between the two groups were statistically significant. Irritation effects were not evaluated in this study, nor were clinical signs or symptoms. This study has several limitations, notably small sample sizes, insufficient chemical exposure data, and the lack of a zero exposure group; however, its findings have been supported by a short-term clinical study by Echeverria et al. (1989), who used exposure levels, above and below 88 ppm (332 mg/m^3) for exposure durations of 3-7 hours over 142 days and achieved similar results.

Workers exposed to TWAs of 41–46 ppm toluene in occupational settings had an incidence of health-related complaints that was 2-3 times that of a control worker group. Common complaints included dizziness, headaches, sore throats, eye irritation and difficulty in sleeping (Yin et al. 1987).

The major effects of acute exposure to high concentrations of toluene (as may occur from glue sniffing, solvent abuse or industrial accidents) are CNS dysfunction and narcosis (ATSDR 1992). Experimental studies in volunteers, however, show that acute exposures to low concentrations of toluene (e.g., in the range of 40 ppm) cause few, if any, observable effects (Andersen et al. 1983).

Toluene has been suspected of causing congenital defects in infants born to mothers who were exposed to, or who abused, toluene during pregnancy (Holmberg 1979; Hersh et al. 1985; Hersh 1989). Congenital defects include microcephaly, CNS dysfunction, attention deficits and developmental delay/mental deficiency, as well as phenotypic abnormalities. However, the contribution to these congenital defects of other chemical exposures, including alcohol and/or other aromatic solvents, cannot be evaluated.

N.46.3.2 Experimental Studies in Animals

Systemic Toxicity

No respiratory lesions or histological abnormalities were observed in the lungs of rats or mice exposed via inhalation to 4,000 ppm toluene (during 3 hours/day) for 8 weeks or to 12,000 ppm for seven 10-minute periods daily, separated by a 20-minute recovery period (Bruckner and Peterson 1981). Inflammation of the nasal mucosa, erosion and metaplasia of the nasal epithelium, and degeneration of the respiratory epithelium were reported in rats exposed to toluene at 600–1,200 ppm for 6.5 hours/day, 5 days/week for 2 years (NTP 1990). These effects were not observed in mice at similar concentrations. In rats exposed chronically for 24 months to lower doses of toluene (i.e., 300 ppm) no histopathological lung or nasal lesions attributable to toluene exposure were observed (CIIT 1980).

A second NTP study of shorter duration (NTP 1990) was conducted in which rats were exposed to higher doses of toluene via inhalation (0, 100, 625, 1250, 2500, and 3000 ppm) for 15 weeks. There was a concentration-related increase in relative liver weights in the three highest dose groups in males, and the two highest dose groups in females. Significantly elevated relative weights of the heart, lung, and kidney were also noted in the two highest dose groups, as compared with controls; however, no histopathology was observed in any exposure group.

A subchronic gavage study was conducted with rats (NTP 1990): groups of animals were administered toluene in corn oil via gavage at dose levels of 0, 312, 625, 1250, 2,500, or 5,000 mg/kg-day for 5 days per week for 13 weeks. All animals in the highest dose group died within the first week. No neurotoxic effects of biological significance were observed in animals receiving doses of 1,250 or less mg/kg-day. Organ weight changes occurred in the liver, kidney, brain, and urinary bladder in animals receiving 1,250 or more mg/kg-day; however, consistent histopathological changes were evident for the liver, kidney, and urinary bladder in the highest surviving dose groups (2,500 mg/kg-day), and in the brain at the middle

and highest surviving dose groups (1,250 mg/kg-day and 2,500 mg/kg-day). A similar study conducted by NTP (1990) with mice being exposed to the same gavage dose resulted in severe symptoms of neurotoxicity in the two highest dose groups and early death for all animals in the highest dose groups. No other significant changes were reported for any treated groups in the mouse study.

Developmental Toxicity

Studies with experimental animals provide evidence that toluene is a developmental toxicant if pregnant females are exposed to high doses that also induce maternal toxicity. Ungvary and Tatrai (1985) exposed rabbits to air concentrations of 0, 500 or 1,000 mg/m^3 of toluene for 24 hours daily on gestational days 7–20. Mice were also exposed continuously to air vapors containing 0, 500, 1,000, or 1,500 mg/m^3 of toluene on gestational days 6–15. Developmental effects, including skeletal anomalies, signs of retarded skeletal development and low fetal weights were observed in mice in the 1,000 mg/m^3, but not in the 500 mg/m^3, maternally exposed group; all female mice exposed to 1,500 mg/m^3 died. Maternal mortality, spontaneous abortions and total litter resorption occurred in the high-dose rabbit group; spontaneous abortion occurred in one female rabbit in the low-dose group. Rats and hamsters were exposed to 800 mg/m^3 of toluene vapors 6 hours daily on gestational days 14–20 (rats) and 6–11 (hamsters) (DaSilva et al. 1990). Although no evaluation of malformations or anomalies was performed, the exposed pregnant rats exhibited a decrease in the number of live pups at birth and an increase in the number of litters with low birth weight pups. No biologically significant neurobehavioral effects were observed in these studies. No effects were noted in exposed hamsters.

Reproductive Effects

There were no treatment-related effects on survival or reproductive parameters in a 2-generation study of mice exposed to toluene via inhalation at doses ranging up to 2,000 ppm, 7 days per week, 6 hours per day (API 1985). Although significant retardation of growth was observed in the offspring of both generations, no adverse reproductive effects were reported. There were no histopathological lesions of ovaries or testes attributed to toluene exposure in rats and mice exposed via inhalation of concentrations of toluene ranging from 300 ppm to 1,200 ppm, 6.0-6.5 hours daily, 5 days weekly for 2 years (CIIT 1980; NTP 1990).

Other Systemic Effects

Several authors have reported immunosuppression effects of inhalation exposure to toluene. Mice exposed for 3 hours to toluene at inhalation concentrations of 2.5–500 ppm exhibited increased, but not dose-related, susceptibility to respiratory infections when challenged by *Streptococcus zooepidmicus* (Aranyi et al. 1985). There was no effect on susceptibility to infection at lower doses of toluene exposure (i.e., 1 ppm for 3 hours daily, for 5 days or 4 weeks). However, the bactericidal activity of the lung was decreased during the 5-day

treatment, but not during the 4-week treatment. The authors hypothesized that toluene exerted an adverse effect on alveolar macrophage function, thereby decreasing disease resistance. However, the lack of a bactericidal effect during the 4-week treatment suggests that adaptation to exposure may occur. Toluene at low dose levels (0.5–1.0 nM) was cytotoxic to rat and rabbit alveolar macrophage *in vitro* (Suleiman 1987).

N.46.4 Toxicokinetics

Toluene is readily absorbed by the respiratory and gastrointestinal tracts (Carlsson 1982; Pykko 1983) and to a lesser extent through the skin (Dutkiewicz and Tyras 1968. Animals administered toluene either orally or by inhalation exhibited moderate-to-high concentrations of toluene and its metabolites in liver, kidney, blood, brain, bone marrow, and adipose tissue (Bergman 1979). Toluene is metabolized by side-chain hydroxylation followed by oxidation to benzoic acid; benzoic acid is then conjugated with glycine to form hippuric acid and is excreted in the urine (ATSDR 1992). In both humans and animals, 60–75 percent of inhaled toluene that is absorbed can be accounted for as hippuric acid in the urine (Ogata et al. 1970). Most of the remaining toluene is exhaled unchanged. The excretion of toluene and its metabolites is rapid, with most of it occurring within 12 hours of exposure (Ogata et al. 1970).

N.46.5 Toxicity Values

Toluene-induced neurotoxicity has been documented in humans exposed to high, but not low, concentrations. EPA's ingestion R_fD (chronic) is 0.2 mg/kg-day for toluene (EPA 1993m), based on a 13-week rat gavage study in which an increase in liver and kidney organ weights was reported as the most sensitive index of toxicity (NTP 1990).

EPA (1993m) has developed an inhalation R_fC for toluene of 0.4 mg/m^3, based on the neurological effects observed in an occupational epidemiologic study (Foo et al. 1990), with application of an uncertainty factor of 300 (10 for intraspecies variability, 10 for the use of a LOAEL, and 3 for data base deficiencies in characterizing adequately the neurotoxicity and respiratory irritation of toluene in animal studies). This value was used to estimate an inhalation R_fD of 1.14×10^{-1}.

A long-term inhalation bioassay, in which toluene was administered to F344 rats of both sexes at doses ranging from 30 to 300 ppm, showed no evidence of carcinogenic activity (CIIT 1980). No evidence of carcinogenicity was found in studies in rats exposed to toluene (30–1,200 ppm) and mice exposed to toluene (120–1,200 ppm) for 6 hours/day, 5 days/week for 104 weeks (NTP 1990).

N.47 TRICHLOROETHENE

Trichloroethene (C_2HCl_3, CAS registry number 79-01-6), also referred to as trichloroethylene, is an industrial solvent commonly employed in degreasing and extraction processes.

N.47.1 Cancer

Several epidemiologic studies have failed to find evidence of an association between trichloroethene and cancer, although each study has been found wanting in some area (Calabrese and Kenyon, citing EPA [1985]). Results from laboratory animal carcinogenicity bioassays have been oftentimes conflicting, with differences in the administered chemical, exposure protocols, animal strains, and other factors contributing to the inconsistencies. Trichloroethene had been classified as a probable human carcinogen (Group B2), but this classification has been removed as of July of 1992 (EPA, 1993).

N.47.2 Mutagenicity

Based on an evaluation by EPA (1985), it was concluded that there is "suggestive" evidence that commercial grade trichloroethene is a weakly active indirect mutagen, although commercial grade formulations are typically contaminated with other potential mutagens (Calabrese and Kenyon, 1991). Positive genotoxicity results have been obtained from bacterial, fungal, and mouse spot assays, but negative results are reported in fruit fly (*Drosophila*) and mouse dominant lethal assays (Calabrese and Kenyon, 1991, citing EPA, 1984). Such results led to the conclusion in EPA (1985) of the insufficiency of the data for definitive statements regarding the genotoxicity of trichloroethene.

N.47.3 Toxicity

Effects of oral exposure to trichloroethene are rather well studied, with multiple studies reporting mortality, systemic effects (hematological, hepatic, renal), developmental, reproductive, neurological, and carcinogenic effects after subchronic and chronic administration of trichloroethene (ATSDR, 1991). No results, however, are listed from human studies. Animal LOAELs and NOAELs typically range from 10 to 1,000 mg ingested trichloroethene per kilogram body weight per day, although a single rat NOAEL for renal effects is stated to occur at 50 mg/kg-day (Maltoni et al., 1986).

As a volatile organic solvent, the more common experimental protocols employ inhalation exposures. Overexposure to trichloroethene is first manifest as central nervous system depression. Other effects can also be observed in the respiratory, cardiovascular, hematological, hepatic, and renal organ systems (ATSDR, 1991). From an assortment of subchronic and chronic inhalation exposure studies, laboratory animal LOAELs and NOAELs typically range from 100 to 2,000 ppm (ATSDR, 1991). A single study assessing respiratory, cardiovascular, hepatic and renal effects in rats reported a NOAEL of 35 ppm following 90 days of continuous exposure to trichloroethene (Prendergast et al., 1967).

N.47.4 Toxicokinetics

Absorption of trichloroethene is rapid and extensive following inhalation, ingestion, or dermal exposures (ATSDR, 1991). Absorbed trichloroethene may preferentially distribute to fat tissues, but this conclusion is open to interpretation because other body compartment concentrations were not measured (Pfaffenberger et al., 1980). The primary routes of excretion are as unchanged parent compound in exhaled breath, or as urinary metabolites (ATSDR, 1991).

N.47.5 Metabolism

The liver is the main site of trichloroethene metabolism, and the fraction of absorbed trichloroethene that is metabolized is reported by many investigators to range from 40 to 70 percent (studies cited in ATSDR, 1991). Principal metabolites are trichlorethanol, trichloroethanol-glucuronide, and trichloroacetic acid (studies cited in ATSDR, 1991); these metabolites account for approximately 90 percent of the metabolites found in urine (Dekant et al., 1984). Formation of toxic intermediates in the metabolism of trichloroethene may be responsible for causing systemic toxicity.

N.48 TRICHLOROETHANE, 1,1,2-

N.48.1 Cancer

The EPA weight-of-evidence classification for carcinogenicity for 1,1,2-trichloroethane (1,1,2-TCA) is "C"—possible human carcinogen. The basis for the classification was hepatocellular carcinomas and pheochromocytomas in one strain of mice (EPA 1995). Carcinogenicity was not shown in rats. 1,1,2-Trichloroethane is structurally related to 1,2-dichloroethane, a probable human carcinogen.

N.48.1.1 Epidemiologic Data in Humans

There is no epidemiological data available indicating that 1,1,2-TCA causes cancer in humans.

N.48.1.2 Experimental Studies in Animal

Oral Exposure

In a bioassay conducted by NCI (1978) technical grade (92.7 percent pure) 1,1,2-TCA was administered by gavage in corn oil to Osborne-Mendel rats and B6C3F1 mice: (50/species/sex/dose) for each of 2 doses and 20 animals/species/sex for each of 2 control groups. Administration was 5 times/week for 78 weeks during which time doses for rats were increased from 70 and 30 mg/kg-day to 100 and 50 mg/kg-day, and doses for mice were increased from 300 and 150 mg/kg-day to 400 and 200 mg/kg-day. By two statistical tests,

treatment of mice was found to be associated with increased incidence of hepatocellular carcinomas. A dose-related increase in pheochromocytomas was also confirmed in female mice. Tumors found in treated, but not control, rats included: adrenal cortical carcinomas; transitional-cell carcinomas of kidney; renal tubular adenomas; and hemangiosarcomas of spleen, pancreas, abdomen and subcutaneous tissue. There was, however, no statistically significant increase in tumor incidence in rats as a function of treatment.

The oral slope factor for 1,12-TCA is 5.7×10^{-2} $(mg/kg\text{-}day)^{-1}$. The drinking water unit risk of 1.6×10^{-6} $\mu g/L$ should not be used if the water concentration exceeds 6,000 $\mu g/L$, the unit risk may not be appropriate above this concentration.

Dose-related increases in hepatocellular carcinomas were observed in adequate numbers or mice of both sexes. Background incidence of this tumor type is generally high. Modeling was done on only one data set.

Inhalation Exposure

The inhalation unit risk is 1.6×10^{-5} $(\mu g/m^3)^{-1}$ (EPA 1995). This inhalation risk estimate was calculated from the oral exposure data. The unit risk should not be used if the air concentration exceeds 600 $\mu g/m^3$, since the unit risk may not be appropriate above this concentration.

N.48.2 Toxicity

The studies by White et al. (1985) and Sanders et al. (1985) have been selected as the basis for the derivation of the oral R_fD because they are adequate studies in which mice of both sexes were exposed to 1,1,2-trichloroethane in drinking water for 90 days. Concentrations provided were 0, 20, 200, or 2000 mg/L, which resulted in intakes of 0, 4.4, 46, and 305 mg/kg-day for males and 0, 3.9, 44, and 384 mg/kg-day for females. Clinical chemistry indications of adverse effects on the liver occurred in both sexes at 2000 mg/L. Effects on the erythrocytes occurred only in females and depressed humoral immune status occurred in both sexes at 200 and 2,000 mg/L. The concentration of 20 mg/L, corresponding to 3.9 mg/kg-day for female rats, (White et al., 1985; Sanders et al., 1985) is the NOAEL at which significant adverse effects were not observed and is chosen as the basis for the derivation of an oral R_fD of 4×10^{-3} mg/kg-day (EPA 1995).

The uncertainty factors for the oral R_fD include the standard uncertainty factors for interspecies and intrahuman variability, and a factor of 10 for extrapolation to lifetime exposure from an intermediate exposure duration.

The previous oral R_fD (0.22 mg/kg-day) was based on the NCI (1978) study in rats. This study's major weakness was its lack of reporting of noncancer effects. Also, doses far below the NCI (1978) NOAEL (65.7 mg/kg-day) have been shown to alter levels of clinical serum chemistries, which are indicative of systemic tissue damage.

The critical study is given a medium confidence for balanced strengths (clinical chemistries) and weaknesses (lack of histopathology and a NOAEL). The supporting data base and the $R_fD$are rated medium because of the general lack of appropriate chronic toxicologic data.

A risk assessment for this substance/agent is under review by an EPA work group.

N.48.3 Mutagenicity

1,1,2-Trichloroethane was found to be nonmutagenic for Salmonella typhimurium (Simmon et al., 1977). In rats and mice acutely exposed to 1,1,2-trichloroethane by inhalation and intraperitoneal injection, trichloroacetic acid, trichloroethanol, chloroacetic acid and thiodiacetic acid were among the urinary metabolites identified (Yllner, 1971; Ikeda and Ohtsuji, 1972). 1,1,2-Trichloroethane is structurally related to 1,2-dichloroethane, a probable human carcinogen.

N.49 Zinc

Zinc (Zn) is an ubiquitous, nutritionally-essential trace element that also plays various industrial roles in galvanizing processes, paint formulations, and rubber, glass, or paper production. Zn provides a protective coating on other metals as it does not rust, and it is also used in alloys such as bronze and brass to make electrical equipment, zinc and copper to make U.S. coins. Zinc salts are used in ceramics, textiles, batteries, and also in the pharmaceutical industry as a solubilizing agent in many drugs. Zinc is found in the environment and in all foods and is released into the environment from anthropogenic activities such as mining, purification of Zn, steel production, and burning of coal and wastes. Zinc is an essential element required by humans in small amounts, but is deleterious to health in too little or too great quantities.

N.49.1 Toxicity

The toxic effects observed in humans following oral exposure to zinc as zinc oxide included abdominal pain, vomiting, anemia (ATSDR 1992), decreased HDL cholesterol (Chandra 1984; Hooper et al. 1980), and pancreatic damage (Chobanian 1981; Murphy 1970) at a dose greater than 10 times the recommended dietary allowance for zinc. High doses of Zn in humans cause decreased levels of hemoglobin and hematocrit, and similar effects were observed in other experimental animals species (ATSDR 1992). Ulceration of the forestomach and intestinal bleeding were reported for mice dosed with 1,110 mg Zn/kg-day and ferrets dosed with 390 mg/kg-day (Maita et al. 1981, Straube et al. 1980).

As a dietary requirement, oral exposure to zinc has been well-studied in animals and humans. With a variety of experimental durations (from >14 days to >1 year), adverse effects from zinc excess include mortality, gastrointestinal, hematological, musculo-skeletal, hepatic, renal, immunological, and developmental changes (ATSDR, 1989). In general, most of the animal NOAELS for these effects occur at daily ingestion of zinc ranging from 10 to 100 mg/kg, although dog NOAELs of 2 mg/kg-day for gastrointestinal and musculo-skeletal toxicity were obtained by Anderson and Danylchuk (1979) in a 9-month study of dogs given zinc in drinking water. For the same types of adverse effects, the typical range of human LOAELs and NOAELs range from 1 to 5 mg/kg-day, although Kynast and Saling (1986) reports a NOAEL of 0.09 mg/lg-day for developmental effects in humans administered daily doses of zinc aspartate in capsules for 11 weeks duration.

N.49.2 Toxicity Values

EPA has established an oral reference dose (R_fD) of 0.3 mg zinc (as a soluble salt) ingested per kilogram body weight per day, based on a decrease in erythrocytic superoxide dismutase content in adult human females after 10 weeks of zinc exposure (Yadrick et al., 1989). This $R_fD$is based upon a dietary supplement LOAEL dosage of approximately 60 mg/kg, converted to 1 mg/kg-day, and by applying an aggregate uncertainty factor of 3. The uncertainty factor accounts for the use of a minimal LOAEL from a moderate-duration study of the most sensitive humans and consideration of a substance that is an essential dietary nutrient (EPA, 1993).

At present, EPA considers zinc to be unclassifiable as a human carcinogen (Class "D"), based on an absence of human carcinogenicity data and inadequate evidence of carcinogenicity in animals (EPA, 1993).

APPENDIX N REFERENCES

Abernathy, C.O., W. Marcus, C. Chen, H. Gibb, and P. White. 1989. Memorandum regarding Arsenic Work Group meetings to P. Cook, USEPA Office of Drinking Water, and P. Preuss, USEPA Office of Regulatory Support and Scientific Management. U.S. Environmental Protection Agency, Office of Drinking Water and Office of Research and Development, Washington, D.C., February 23.

Akhtar, M.N., J.G. Hamilton, D.R. Boyd, A. Braunstein, H.E. Seifried, and D.M. Jerina. 1979. Anthracene 1,2-oxide: Synthesis and role in the metabolism of anthracene in mammals. *J. Chem. Soc. Perkin* 1: 1422-1446.

Aksoy, M., S. Erdem, and G. Dincöl. 1974. Leukemia in shoe-workers exposed chronically to benzene. *Blood* 44: 837-841.

Aksoy, M., S. Erdem, G. Erdoğan, and G. Dincöl. 1976. Combination of genetic factors and chronic exposure to benzene in the aetiology of leukaemia. *Human Hered.* 26: 149-153.

Aksoy, M. 1980. Different types of malignancies due to occupational exposure to benzene: A review of recent observations in Turkey. *Environ. Res.* 23: 181-190.

Alexandrov, K., and C. Frayssinet. 1973. In vivo effect of some naphthalene-related compounds on aryl hydrocarbon (benzo[*a*]pyrene) hydroxylase. *J. Nat. Cancer Inst.* 51: 1067-1069.

Allen, J.R., and D.H. Norback. 1973. Polychlorinated biphenyl- and triphenyl-induced gastric mucosal hyperplasia in primates. *Science* 179: 498-499.

Ambrose, A.M., P.S. Larson, J.R. Borzelleca, and G.R. Henniga, Jr. 1976. Long-term toxicologic assessment of nickel in rats and dogs. *J. Food Sci. Technol.* 13: 181-187.

Amin, S., N. Hussain, G. Balanikas, K. Huie, and S.S. Hecht. 1985b. Mutagenicity and tumor initiating activity of methylated benzo[*k*]fluoranthenes. *Cancer Lett.* 26: 343-347.

Amin, S. E.J. LaVoie, and S.S. Hecht. 1982. Identification of metabolites of benzo(*b*)-fluoranthene. *Carcinogenesis* 3: 171-174.

Amin, S., K. Huie, and S. Hecht. 1985a. Mutagenicity and tumor-initiating activity of methylated benzo(*b*)fluoranthenes. *Carcinogenesis* 3:171-174.

Andersen, I., G.R. Lundqvist, L. Molhave, O.F. Pedersen, D.F. Proctor, M. Vaeth, and D.P. Wyon. 1983. Human response to controlled levels of toluene in six-hour exposures. *Scand. J. Work Environ. Health.* 9: 405-418.

Anderson, D., and C.R. Richardson. 1979. Chromosome gaps are associated with chemical mutagenesis. *Environ. Mutat.* 1: 179. (Abstract No. Ec-9)

Anderson, D., and J.A. Styles. 1978. An evaluation of 6 short-term tests for detecting organic chemical carcinogens. II. The bacterial mutation test. *Br. J. Cancer* 37: 924-930.

Anderson, R.A. 1986. Chromium metabolism and its role in disease processes in man. *Clin. Physiol. Biochem.* 4: 31-41.

Angerer, J., and G. Lehnert. 1990. Occupational chronic exposure to metals. II. Nickel exposure of stanless steel welders—Biological monitoring. *Int. Arch. Occup. Environ. Health* 61: 289-295.

Anwar, R.A., R.F. Langham, C.A. Hoppert, *et al.* 1961. Chronic toxicity studies III. Chronic toxicity of cadmium and chromium in dogs. *Arch. Environ. Health* 3: 456-460.

API (American Petroleum Institute). 1985. *Two-Generation Reproduction/Fertility Study on a Petroleum-Derived Hydrocarbon [i.e., Toluene]. Vol. 1.* American Petroleum Institute, Washington, D.C.

Aranyi, C., W.J. O'Shea, R.L. Sherwood, J.A. Graham, and F.J. Miller. 1985. Effects of toluene inhalation on pulmonary host defenses of mice. *Toxicol. Lett.* 25: 103-110.

Astrand, I., A. Kilbom, I. Wahlberg, and P. Ovrum. 1973. Methylchloroform exposure: I. Concentration in alveolar air and blood at rest and during exercise. *Work Environ. Health* 10: 69-81.

ATSDR. 1987. Draft toxicological profile for beryllium. Prepared by Syracuse Research Corporation under contract number 68-03-3228. Prepared for Agency for Toxic Substances and Disease Registry, U.S. Public Health Service, Atlanta, GA. October.

ATSDR (Agency for Toxic Substances and Disease Registry). 1989. *Draft Toxicological Profile for Copper.* Prepared by Syracuse Research Corporation for Agency for Toxic Substances and Disease Registry, U.S. Public Health Service, Atlanta. October

ATSDR (Agency for Toxic Substances and Disease Registry). 1989. *Toxicological Profile for 1,1,2,2-Tetrachloroethane.* Agency for Toxic Substances and Disease Registry, Atlanta. April 14, 1991.

ATSDR (Agency for Toxic Substances and Disease Registry). 1989a. *Toxicological Profile for Naphthalene and 2-Methylnaphthalene.* Draft for public comment. U.S. Department of Health and Human Services, Public Health Service, Agency for Toxic Substances and Disease Registry, Atlanta. 129 pp.

ATSDR (Agency for Toxic Substances and Disease Registry). 1989b. *Toxicological Profile for 1,1,1-Trichloroethane.* Draft for public comment. U.S. Department of Health and Human Services, Public Health Service, Agency for Toxic Substances and Disease Registry, Atlanta. 209 pp.

ATSDR (Agency for Toxic Substances and Disease Registry). 1990. *Toxicological Profile for Polycyclic Aromatic Hydrocarbons.* Report No. TP-90-20. U.S. Department of Health and Human Services, Public Health Service, Agency for Toxic Substances and Disease Registry, Atlanta. Available from NTIS (National Technical Information Service), Springfield, Virginia 22161, as PB91-181537. [245 pp.]

ATSDR (Agency for Toxic Substances and Disease Registry). 1991. *Draft Toxicological Profile for Trichloroethylene.* Prepared by Clement International for U.S. Department of Health and Human Services, Public Health Service, Agency for Toxic Substances and Disease Registry, Atlanta. October.

ATSDR (Agency for Toxic Substances and Disease Registry). 1991a. *Toxicological Profile for Arsenic.* Update draft for public comment. U.S. Department of Health and Human Services, Public Health Service, Agency for Toxic Substances and Disease Registry, Atlanta. [101 pp.]

ATSDR (Agency for Toxic Substances and Disease Registry). 1991b. *Toxicological Profile for Benzene.* Update draft. U.S. Department of Health and Human Services, Public Health Service, Agency for Toxic Substances and Disease Registry, Atlanta. [212 pp.]

ATSDR (Agency for Toxic Substances and Disease Registry). 1991c. *Toxicological Profile for Chromium.* Update draft for public comment. U.S. Department of Health and Human Services, Public Health Service, Agency for Toxic Substances and Disease Registry, Atlanta. [212 pp.]

ATSDR (Agency for Toxic Substances and Disease Registry). 1991d. *Toxicological Profile for Nickel.* Update draft for public comment. U.S. Department of Health and Human Services, Public Health Service, Agency for Toxic Substances and Disease Registry, Atlanta. [167 pp.]

ATSDR (Agency for Toxic Substances and Disease Registry). 1992. *Toxicological Profile for Toluene.* Update draft for public comment. U.S. Department of Health and Human Services, Public Health Service, Agency for Toxic Substances and Disease Registry, Atlanta. [165 pp.]

ATSDR (Agency for Toxic Substances and Disease Registry). 1993. *Toxicological Profile for Lead.* U.S. Department of Health and Human Services, Public Health Service, Agency for Toxic Substances and Disease Registry, Atlanta. Available from NTIS (National Technical Information Service), Springfield, Virginia 22161, as PB93-182475. [339 pp.]

Autrup, H., C.C. Harris, G.D. Stoner, J.K. Selkirk, P.W. Schafer, and B.F. Trump. 1978. Metabolism of [3H]benzo[a]pyrene by cultured human bronchus and cultured human pulmonary alveolar macrophages. *Lab. Invest.* 38: 217-224.

Axelson, O., E. Dahlgren, C.D. Jansson, and S.O. Rehnlund. 1978. Arsenic exposure and mortality: A case referent study from a Swedish copper smelter. *Br. J. Ind. Med.* 35: 8-15.

Axelsson, G., R. Rylander, and A. Schmidt. 1980. Mortality and incidence of tumours among ferrochromium workers. *Br. J. Ind. Med.* 38: 117-124.

Azar, A., H.J. Trochimowicz, and M.E. Maxfield. 1973. Review of lead studies in animals carried out at Haskell Laboratory: Two year feeding study and response to hermorrhage study. Pp. 199-210 in D. Barth, A. Berlin, R. Engel, P. Recht, and J. Smeets, Eds. *Environmental Health Aspects of Lead: Proceedings, International Symposium, October 1972, Amsterdam, The Netherlands.* Commission of the European Communities, Luxembourg.

Badiali, D., A. Marcheggiano, F. Pallone, *et al.* 1985. Melanosis of the rectum in patients with chronic constipation. *Dis. Colon Rectum* 28: 241-245.

Bahn, A.K., I. Rosenwaike, N. Herrman, P. Grover, J. Stellman, and K. O'Leary. 1976. Melanomas after exposure to PCBs. *N. Eng. J. Med.* 295: 450.

Baker, E.L., Jr., P.J. Landrigan, C.J. Glueck, M.M. Zack, Jr., J.A. Liddle, V.W. Burse, W.J. Housworth, and L.L. Needham. 1980a. Metabolic consequences of exposure to polychlorinated biphenyls (PCB) in sewage sludge. *Am. J. Epidemiol.* 112: 553-563.

Baker, E.L., Jr., P.J. Landrigan, A.G. Barbour, D.H. Cox, D.S. Folland, R.N. Ligo, and J. Throckmorton. 1979. Occupational lead poisoning in the United States: Clinical and biochemical findings related to blood lead levels. *Br. J. Ind. Med.* 36: 314-322.

Baker, E.L., R.A. Goyer, B.A. Fowler, U. Khettry, D.B. Bernard, S. Adler, R.D. White, R. Babayan, and R.G. Feldman. 1980b. Occupational lead nephropathy and renal cancer. *Am. J. Ind. Med.* 1: 138-148.

Baslo, A., and M. Aksoy. 1982. Neurological abnormalities in chronic benzene poisoning: A study of six patients with aplastic anemia and two with preleukemia. *Environ. Res.* 27: 457-465.

Bassett, D.J.P., E. Bowen-Kelly, and J.L. Seed. 1988. Rat lung benzo[a]pyrene metabolism following three days continuous exposure to 0.6 ppm ozone. *Res. Commun. Chem. Pathol. Pharmacol.* 60: 291-307.

Baxley, M.N., R.D. Hood, G.C. Vedel, W.P. Harrison, and G.M. Szczech. 1981. Prenatal toxicity of orally administered sodium arsenite in mice. *Bull. Environ. Contam. Toxicol.* 26: 749-756.

Bayer, U. 1978. *In vivo induction of sister chromatid exchanges by three polyaromatic hydrocarbons.* Pp. 423-428 in P.W. Jones and R.I. Freundenthal, Eds. *Carcinogenesis. Vol. 3. Polynuclear Aromatic Hydrocarbons.* Raven Press, New York.

Beaudoin, A.R. 1974. Teratogenicity of sodium arsenate in rats. *Teratology* 10: 153-158.

Becher, G., and A. Bjorseth. 1983. Determination of exposure to polycycloc aromatic hydrocarbons by analysis. *Cancer Lett.* 17: 301-311.

Beckett, W.S., J.L. Moore, J.P. Keogh, and M.L. Bleecker. 1986. Acute encephalopathy due to occupational exposure to arsenic. *Br. J. Ind. Med.* 43: 66-67.

Berenblum, I., and N. Haran. 1955. The influence of croton oil and of polyethylene glycol-400 on carcinogenesis in the forestomach of the mouse. *Cancer Res.* 15: 510-516.

Bernacki, E.J., G.E. Parsons, and F.W. Sunderman. 1978. Investigation of exposure to nickel and lung cancer mortality. *Ann. Clin. Lab. Sci.* 8: 190-194.

Bertazzi, P.A., C. Zochetti, S. Guercilena, M.D. Foglia, A. Pesatori, and L. Riboldi. 1982. Mortality study of male and female workers exposed to PCBs. Pp. 242-248 in *Prevention of Occupational Cancer: International Symposium.* Occupational Safety and Health Series No. 46. International Labour Office, Geneva.

Bertazzi, P.A., L. Riboldi, A. Pesatori, L. Radice, and C. Zochetti. 1987. Cancer mortality of capacitor manufacturing workers. *Am. J. Ind. Med.* 11: 165-176.

Bettley, F.R., and J.A. O'Shea. 1975. The absorption of arsenic and its relation to carcinoma. *Br. J. Dermatol.* 92: 563-568.

Bingham, E., and H.L. Falk. 1969. Environmental carcinogens: The modifying effect of carcinogens on the threshold response. *Arch. Environ. Health* 19: 779-783.

Bionetics Research Labs. 1968. Evaluation of carciongenic, teratogenic and mutagenic activities of selected pesticides and industrial chemical. Vol. I. Carcinogenic study prepared for National Cancer Institute. NCI-DCCP-CG-1973-1-1. [as cited in ATSDR, 1989]

Bogdat'eva, A.G., and D.Y. Bid. 1955. Effect of high molecular weight products of pyrolysis of petroleum on the animal organism. *Gig. Sanit.* 7: 21. (in Russian)

Bolla-Wilson, K., and M.L. Bleeker. 1987. Neuropsychological impairment following inorganic arsenic exposure. *J. Occup. Med.* 29: 500-503.

Bond, J.A., J.R. Harkema, and V.I. Russell. 1988. Regional distribution of xenobiotic metabolizing enzymes in respiratory airways of dogs. *Drug Metab. Dispos.* 16: 116-124.

Bos, R.P., J.L. Theuws, F.J. Jongeneelen, and P.T. Henderson. 1988. Mutagenicity of bi-, tri-, and tetracyclic aromatic hydrocarbons in the "taped plate assay" and in the conventional Salmonella mutagenicity assay. *Mutat. Res.* 204: 203-206.

Boyland, E., and P. Sims. 1962. Metabolism of polycyclic compounds. The metabolism of phenanthrene in rabbits and rats: Dihydro-dihydroxy compounds and related glucosiduronic acids. *Biochem. J.* 84: 571-582.

Boyland, E., and G. Wolf. 1950. Metabolism of polycyclic compounds. 6. Conversion of phenanthrene into dihydroxydihydrophenanthrenes. *Biochem. J.* 47: 64-69.

Brem, H., A.B. Stein and H.S. Rosenkranz. 1974. The mutagenicity and DNA- modifying effect of halokanes. *Cancer Res.* 34: 2576-2579.

Brown, D.P. 1987. Mortality of workers exposed to polychlorinated biphenyls—An update. *Arch. Environ. Health* 42: 333-339.

Brown, D.P., and M. Jones. 1981. Mortality and industrial hygiene study of workers exposed to polychlorinated biphenyls. *Arch. Environ. Health* 36: 120-129.

Brown, L.M., L.M. Pottern, and W.J. Blot. 1984. Lung cancer in relation to environmental pollutants emitted from industrial sources. *Environ. Res.* 34: 250-261.

Bruckner, J.V., S. Muralidhara, W.F. MacKenzie, G.M. Kyle, and R. Luthra. 1985. Acute and subacute oral toxicity studies of 1,1,1-trichloroethane (TRI) in rats. *Toxicologist* 5(1): 100.

Bruckner, J.V., and R.G. Peterson. 1981. Evaluation of toluene and acetone inhalant abuse. II. Model development and toxicology. *Toxicol. Appl. Pharmacol.* 61:302-312.

Brune, H., R.P. Deutsch-Wenzel, M. Habs, S. Ivankovic, and D. Schmähl. 1981. Investigation of the tumorigenic response to benzo[*a*]pyrene in aqueous caffeine solution applied orally to Sprague-Dawley rats. *J. Cancer Res. Clin. Oncol.* 102(2): 153-157.

Buchet, J.P., R. Lauwerys, and H. Roels. 1981b. Urinary excretion of inorganic arsenic and its metabolites after repeated ingestion of sodium meta arsenite by volunteers. *Int. Arch. Occup. Environ. Health* 48: 111-118.

Buchet, J.P., R. Lauwerys, and H. Roels. 1981a. Comparison of the urinary excretion of arsenic metabolites after a single oral dose of sodium arsenite, monomethyl arsonate or dimethyl arsinate in man. *Int. Arch. Occup. Environ. Health* 48: 71-79.

Buckpitt, A.R., L.S. Bahnson, and R.B. Franklin. 1986. Comparison of the arachidonic acid and NADPH-dependent microsomal metabolism of naphthalene and 2-methylnaphthalene and the effect of indomethacin on the bronchiolar necrosis. *Biochem. Pharmacol.* 35: 645-650.

Buckpitt, A.R., L.S. Bahnson, and R.B. Franklin. 1984. Hepatic and pulmonary microsomal metabolism of naphthalene to glutathione adducts: Factors affecting the relative rates of conjugate formation. *J. Pharmacol. Exp. Therap.* 231: 291-300.

Buening, M.K., W. Levin, J.N. Karle, H. Yagi, D.M. Jerina, and A.H. Conney. 1979a. Tumorigenicity of bay-region epoxides and other derivatives of chrysene and phenanthrene in newborn mice. *Cancer Res.* 39: 5063-5068.

Buening, M.K., W. Levin, A.W. Wood, R.L. Chang, H. Yagi, J.M. Karle, D.M. Jerina, and A.H. Conney. 1979b. Tumorigenicity of the dihydrodiols of dibenzo[a,h]anthracene on mouse skin and in newborn mice. *Cancer Res.* 39: 1310-1314.

Bull, R.J., M. Robinson, and R.D. Laurie. 1986. Association of carcinoma yield with early papilloma devlopment in SENCAR mice. *Environ. Health Perspect.* 68: 11-17.

Butler, J.D., and P. Crossley. 1981. Reactivity of polycyclic aromatic hydrocarbons adsorbed on soot particles. *Atmos. Environ.* 15: 91-94.

Byron, W.R., G.W. Bierbower, J.B. Brouwer, and W.H. Hansen. 1967. Pathological changes in rats and dogs from two-year feeding of sodium arsenite or sodium arsenate. *Toxicol. Appl. Pharmacol.* 10: 132-147.

Calabrese, E.J., and E.M. Kenyon. 1991. *Air Toxics and Risk Assessment.* Lewis, Chelsea, Michigan.

Carlsson, A. 1982. Exposure to toluene. Uptake, distribution, and elimination in man. *Scand. J. Work Environ. Health* 8: 43-55.

Carmignani, M., P. Boxcolo, and A. Iannaccone. 1983. Effects of chronic exposure to arsenate on the cardiovascular function of rats. *Br. J. Indust. Med.* 40:280-284.

Carpenter, S.J. 1987. Development analysis of cephalic axial dysraphic disorders in arsenic-treated hamster embryos. *Anat. Embryol.* 176: 345-365.

Casto, B.C., J. Meyers, and J.A. DiPaulo. 1979. Enhancement of viral transformation for evaluation of the carcinogenic or mutagenic potential of inorganic metal salts. *Cancer Res.* 39: 193-198.

Casto, B.C., J. Meyers and J.A. DiPaolo. 1979. Enhancement of viraltransformation for evaluation of the carcinogenic or mutagenicpotential of inorganic metal salts. Cancer Res. 39: 193-198.

Challenger, F. 1945. Biological methylation. *Chem. Rev.* 36: 315-361.

Chang, L.H. 1943. The fecal excretion of polycyclic hydrocarbons following their administration to the rat. *J. Biol. Chem.* 151: 93-99.

Chang, R.L., W. Levin, A.W. Wood, H. Yagi, M. Tada, K.P. Vyas, D.M. Jerina, and A.H. Conney. 1983. Tumorigenicity of enantiomers of chrysene 1,2-dihydrodiol and of the diastereomeric bay-region chrysene 1,2-diol-3,4-epoxides on mouse skin and in newborn mice. *Cancer Res.* 43: 192-196.

Chaturapit, S., and G.M. Holder. 1978. Studies on the hepatic microsomal metabolism of [^{14}C]-phenanthrene. *Biochem. Pharmacol.* 27: 1865-1871.

Chen, P., C. Wong, C. Rappe, and M. Nygren. 1985. Polychlorinated biphenyls, dibenzofurans and quaterphyenyls in toxic rice-bran oil and in the blood and tissues of patients with PCB poisoning (Yu-Cheng) in Taiwan. *Environ. Health Perspect.* 59: 59-65.

Chia, L., and F. Chu. 1984. Neurological studies on polychlorinated biphenyl (PCB)-poisoned patients. *Am. J. Ind. Med.* 5: 117-126.

Chovil, A., R.B. Sutherland, and M. Halliday. 1981. Respiratory cancer in a cohort of nickel sinter plant workers. *Br. J. Ind. Med.* 38: 327-333.

Ciccarelli, R.B., T.H. Hampton, and K.W. Jennette. 1981. Nickel carbonate induces DNA-protein crosslinks and DNA strand breaks in rat kidney. *Cancer Lett.* 12: 349-354.

Cicmanec, J., K. Poirier, and M. Dourson. 1994. A non-cancer quantitative risk assessment for Aroclor 1016, a commercial polychlorinated biphenyl mixture. *Soc. Toxicol. Abstracts* 14(1): 402.

CIIT (Chemical Industry Institute of Toxicology). 1980. A Twenty-Four Month Inhalation Toxicology Study in Fischer-344 Rats Exposed to Atmospheric Toluene. Chemical Industry Institute of Toxicology, Research Triangle Park, N.C.

Clar, E., Ed. 1964. *Polycyclic Hydrocarbons. Vol. 2*, pp. 130-140. Academic Press, New York.

Cohen, G.M., S.M. Haws, B.P. Moore, *et al.* 1976. Benzo(a)pyren-3-yl hydrogen sulfate, a major ethyl acetate-extractable metabolite of B(a)P in human, hamster and rat lung cultures. *Biochem. Pharmacol.* 25: 2561-2570.

Collins, J.J., P. Conner, B.R. Friedlander, P.A. Easterday, R.S. Nair, S. Rashmi, and J. Braun. 1991. A study of the hematological effects of chronic low-level exposure to benzene. *J. Occup. Med.* 33: 619-626.

Cook, J.W. 1932. The production of cancer by pure hydrocarbons -- Part II. *Proc. Royal Soc. London S.B.* 11:485-496.

Cook, J.W., C.L. Hewett, and I. Hieger. 1933. The isolation of a cancer-producing hydrocarbon from coal tar. *J. Chem. Soc.*: 395-405.

Coombs, M.M., T.S. Bhatt, and C.J. Croft. 1973. Correlation between carcinogenicity and chemical structure in cyclopenta(a)phenanthrenes. *Cancer Res.* 33: 832-837.

Cooper, W.C., O. Wong, and L. Kheifets. 1985. Mortality among employees of lead battery plants and lead producing plants, 1947-1980. *Scand. J. Work. Environ. Health* 11: 331-345.

Costa, M. 1989. Perspectives on the mechanism of nickel carcinogenesis gained from models of *in vitro* carcinogenesis. *Environ. Health Perspect.* 81: 73-76.

Costa, M., J.D. Heck, and S.H. Robinson. 1982. Selective phagocytosis of crystallene metal sulfide particles and DNA strand breaks as a mechanism for the induction of cellular transformation. *Cancer Res.* 42: 2757-2763.

Crecelius, E.A. 1977. Changes in the chemical speciation of arsenic following ingestion by man. *Environ. Health Perspect.* 19: 147-150.

Cronkite, E.P., R.T. Drew, T. Inoue, and J.E. Bullis. 1985. Benzene hematotoxicity and leukemogenesis. *Am. J. Ind. Med.* 7: 447-456.

Cronkite, E.P., R.T. Drew, T. Inoue, Y. Hirabayashi, and J.E. Bullis. 1989. Hematotoxicity and carcinogenicity of inhaled benzene. *Environ. Health Perspect.* 82: 97-108.

Dahl, A.R., D.C. Coslett, J.A. Bond, and G.R. Hesseltine. 1985. Metabolism of benzo(a)pyrene on the nasal mucosa of Syrian hamsters: Comparison to metabolism by other extrahepatic tissues and possible role of nasally produced metabolites in carcinogenesis. *J. Nat. Cancer Inst.* 75: 135-139.

Dallas, C.E., R. Ramanathan, S. Muralidhara, J.M. Gallo, and J.V. Bruckner. 1989. The uptake and elimination of 1,1,1-trichloroethane during and following inhalation exposure in rats. *Toxicol. Appl. Pharmacol.* 98: 385-397.

DaSilva, V.A., L.R. Malheiros, and F.M.R. Bueno. 1990. Effects of toluene exposure during gestation on neurobehavioral development of rats and hamsters. *Brazil. J. Med. Biol. Res.* 23: 533-537.

Davidorf, F.H., and J.A. Knupp. 1979. Epidemiology of ocular melanoma. Incidence and geographic relationship in Ohio (1967-1977). *Ohio State Med. J.* 75: 561-564.

Davis, R.K., A.W. Horton, E.E. Lawson, and K.L. Stemmer. 1963. Inhalation of tetramethyl lead and tetraethyl lead. *Arch. Environ. Health* 6: 473-479.

De Flora, S., A. Camoiranoa, P. Zanacchi, and C. Bennicelli. 1984. Mutagenicity testing with TA97 and TA102 of 30 DNA-damaging compounds, negative with other *Salmonella* strains. *Mutat. Res.* 134: 159-165.

Dekant, W., M. Metzler, and D. Henschler. 1984. Novel metabolites of trichloroethylene through dechlorination reactions in rats, mice and humans. *Biochem. Pharmacol.* 33:2021-2027.

Deknudt, G., A. Colle, and G.B. Gerber. 1977. Chromosomal abnormalities in lymphocytes from monkeys poisoned with lead. *Mutat. Res.* 45: 77-83.

Demerec, M., G. Bertani, and J. Flint. 1951. A survey of chemicals for mutagenic action on E. coli. Am. Natur. 85:119-136.

DePierre, J.W., and L. Ernster. 1978. The metabolism of polycyclic hydrocarbons and its relationship to cancer. *Biochim. Biophys. Acta* 473:149-186.

Deutsch-Wenzel, R.P., H. Brune, G. Grimmer, G. Dettbarn, and J. Misfeld. 1983. Experimental studies in rat lungs on the carcinogenicity and dose-response relationships of eight frequently occurring environmental polycyclic aromatic hydrocarbons. *J. Nat. Cancer Inst.* 71: 539-544.

Diamond, L., F. Kruszewski, D.P. Aden, B.B. Knowles, and W.M. Baird. 1980. Metabolic activation of B[a]P by a human hepatoma cell line. *Carcinogenesis* 1: 871-875.

DiPaolo, J.A., R.L. Nelson, and B.C. Casto. 1978. *In vitro* neoplastic transformation of Syrian hamster cells by lead acetate and its relevance to environmental carcinogenesis. *Br. J. Cancer* 38: 452-455.

Doak, S.M.A., B.J.E. Simpson, P.F. Hunt, and D.E. Stevenson. 1976. The carcinogenic response in mice to the topical application of propane sultone to the skin. *Toxicology* 6: 139-154.

Dobrokhotov, V.B. 1972. The mutagenic influence of benzene and toluene under experimental conditions. *Gig. Sanit.* 37: 36-39. (in Russian) (as cited in ATSDR 1992)

Doll, R., J.D. Matthews, and L.G. Morgan. 1977. Cancers of the lung and nasal sinuses in nickel workers: A reassessent of the period of risk. *Br. J. Ind. Med.* 34: 102-105.

Doll, R. 1990. Report of the International Committee on Nickel Carcinogenesis in Man. *Scand. J. Work Environ. Health* 16: 1-82.

Dooms-Goossens, A., A. Ceuterick, N. VanMaele, and H. DeGreef. 1980. Follow-up study of patients with contact dermatitis caused by chromates, nickel and cobalt. *Dermatologica* 160: 249-260.

Drew, R.T., and J.R. Fouts. 1974. The lack of effects of pretreatment with phenobarbital and chlorpromazine on the acute toxicity of benzene in rats. *Toxicol. Appl. Pharmacol.* 27: 183-193.

Echeverria, D., L. Fine, G. Langolf, A. Schork, and C. Sampaio. 1989. Acute neurobehavioural effects of toluene. *Br. J. Ind. Med.* 46: 483-495.

Enterline, P.E., V.L. Henderson, and G.M. Marsh. 1987. Exposure to arsenic and respiratory cancer. A reanalysis. *Am. J. Epidemiol.* 125: 929-938.

Enterline, P.E., and G.M. Marsh. 1982. Cancer among workers exposed to arsenic and other substances in a copper smelter. *Am. J. Epidemiol.* 116(6): 895-911.

EPA (U.S. Environmental Protection Agency). 1984. *Health Effects Assesment for Trichloroethylene.* Report No. EPA/540/1-86-046.

EPA (U.S. Environmental Protection Agency). 1993. IRIS (Integrated Risk Information System) On-line Referral. U.S. Environmental Protection Agency, Washington, D.C. 5 May.

EPA (U.S. Environmental Protection Agency). 1985. *Health Assessment Document for Trichloroethylene.* Report No. EPA/600/8-82-006F.

EPA. 1993. IRIS (Integrated Risk Information System) On-line Referral. U.S. Environmental Protection Agency, Washington, D.C. 5 May.

EPA. 1986. Health assessment document for beryllium. EPA/600/8-84/026F. Office of Health and Environmental Assessment, Environmental Criteria and Assessment Office, Research Triangle Park, NC.

Ernhart, C.B., B. Landa, and N.B. Schell. 1981. Subclinical levels of lead and developmental deficit—A multivariate follow-up reassessment. *Pediatrics* 67: 911-919.

Feldman, R.G., C.A. Niles, M. Kelly-Hayes, D.S. Sax, W.J. Dixon, D.J. Thompson, and E. Landau. 1979. Peripheral neuropathy in arsenic smelter workers. *Neurology* 29: 939-944.

Fischbein, A., M. Wolff, R. Lilis, J. Thornton, and I. Selikoff. 1979. Clinical findings among PCB-exposed workers in a capacitor manufacturing facility. *Ann. N.Y. Acad. Sci.* 320: 703-715.

Fishbeck, W.A., J.C. Townsen, and M.G. Swank. 1978. Effect of chronic occupational exposure to measured concentrations of benzene. *J. Occup. Med.* 20: 539-542.

Fishbein, L. 1974. Toxicity of chlorinated biphenyls. *Ann. Rev. Pharmacol.* 14: 139-156.

Farber, H. 1977. Letter to James Price, Chief of Air Quality Data Analysis, Texas Air Control Board, Austin, TX. Manager of Environmental Affairs, Dow Chemical. (As cited in National Cancer Institute. 1977. *Bioassay of 1,1,1-Trichloroethane for Possible Carcinogenicity.* Carcinogen Tech. Rept. Series No. 3, NCI-CG-TR-3.)

Fiume, M., A. Guaitani, R. Modica, and I. Bartosek. 1983. Effect of fasting, induction, sex and age on clearance of benz(a)anthracene and chrysene by isolated perfused rat liver. *Toxicol. Lett.* 19: 73-79.

Flury, F. 1928. II. Toxicities in modern industry. IIa. Pharmacological-toxicological aspects of intoxicants in modern industry. *Arch. Exp. Pathol. Pharmakol.* 138: 65-82. (in German)

Foo, S.C., J. Jeyaratnam, and D. Koh. 1990. Chronic neurobehavioural effects of toluene. *Br. J. Ind. Med.* 47: 480-484.

Forbes, P.D., R.E. Davies, and F. Urback. 1976. Phototoxicity and photocarcinogenesis: Comparative effects of anthracene and 8-methoxypsoralene in the skin of mice. *Food Cosmet. Toxicol.* 14: 393-306.

Friberg, L. 1950. Health hazards in the manufacture of alcaline accumulation. *Acta Med. Scand.* 138(240): 124.

Frost, F., L. Harter, S. Milham, R. Royce, A.H. Smith, J. Hartley, and P. Enterline. 1987. Lung cancer among women residing close to an arsenic emitting copper smelter. *Arch. Environ. Health* 42: 148-152.

Fullerton, A., J.R. Andersen, A. Hoelgaard, and T. Menne. 1986. Permeation of nickel salts through human skin *in vitro*. *Contact Dermat.* 15: 173-177.

Garberg, P., E. Akerblom, and G. Bolcsfoldi. 1988. Evaluation of a genotoxicity test measuring DNA-strand breaks in mouse lymphoma cells by alkaline unwinding and hydroxyapatite elution. *Mutat Res.* 203: 155-176.

Gatehouse, D. 1980. Mutagenicity of 1,2 ring-fused acenaphthenes against *S. typhimurium* TA1537 and TA1538: Structure-activity relationships. *Mutat. Res.* 78: 121-135.

Gerarde, H.W. 1960. *Toxicology and Biochemistry of Aromatic Hydrocarbons. Monographs on Toxic Agents*, pp. 240-321. Elsevier, New York.

Gershbein, L.L. 1975. Liver regeneration as influenced by the structure of aromatic and heterocyclic compounds. *Res. Commun. Chem. Pathol. Pharmacol.* 11: 445-466.

Ghetti, G., and L. Mariani. 1956. Eye changes due to naphthalene. *Med. Lav.* 47: 533-538. (in Italian)

Gilman, J.P.W. 1962. Metal carcinogenesis. II. A study on the carcinogenic activity of cobalt, copper, iron and nickel compounds. Cancer Res. 22:158-166.

Gladen, B., W. Rogan, P. Hardy, J. Thullen, J. Tingelstad, and M. Tully. 1988. Development after exposure to polychlorinated biphenyls and dichlorodiphenyl dichloroethane transplacentally and through human milk. *J. Pediatr.* 113: 991-995.

Goel, K.A., V.P. Agrawal, V. Garg. 1980. Pulmonary toxicity of beryllium in albino rat. Bull. Environ. Contam. Toxicol. 24:59-64.

Gofmeckler, V.A. 1968. Embryotropic action of benzene and formaldehyde inhalation. *Hyg. Sanit. (USSR)* 33 (1-3): 327-332. (translated from *Gig. Sanit.* 33(3): 12-16)

Goldstein, B.D. 1988. Benzene toxicity: Occupational medicine. *State Art Rev.* 3: 541-554.

Goyer, R.A. 1986. Toxic effects of metals. Pp. 582-635 in C.D. Klaassen, M.O. Amdur, and J. Doull, Eds. *Casarett and Doull's Toxicology. The Basic Science of Poisons*, 3rd ed. Macmillan, New York.

Grandjean, P., H.C. Wulf, and E. Niebuhr. 1983. Sister chromatid exchange in response to variations in occupational lead exposure. *Environ. Res.* 32: 199-204.

Grant, G., and F.J.C. Roe. 1963. The effect of phenanthrene on tumour induction by 3,4-benzopyrene administered to newly born mice. *Br. J. Cancer* 17: 261-265.

Griffin, K.A., C.B. Johnson, R.K. Breger, and R.B. Franklin. 1981. Pulmonary toxicity, hepatic, and extrahepatic metabolism of 2-methylnaphthalene in mice. *Toxicol. Appl. Pharmacol.* 61: 185-196.

Griffin, K.A., C.B. Johnson, R.K. Breger, and R.B. Franklin. 1983. Pulmonary toxicity of 2-methylnaphthalene: Lack of a relationship between toxicity, dihydrodiol formation and irreversible binding to cellular macromolecules in DBA/2J mice. *Toxicology* 26: 213-230.

Gustavsson, P., C. Hogstedt, and C. Rappe. 1986. Short-term mortality and cancer incidence in capacitor manufacturing workers exposed to polychlorinated biphenyls (PCBs). *Am. J. Ind. Med.* 10: 341-344.

Habs, M., S.A. Jahn, and D. Schmähl. 1984. Carcinogenic activity of condensate from coloquint seeds (*Citrullus colocynthis*) after chronic epicutaneous administration to mice. *J. Cancer Res. Clin. Oncol.* 108: 154-156.

Haddow, A., C.M. Scott, and J.D. Scott. 1937. The influence of certain carcinogenic and other hydrocarbons on body growth in the rat. *Proc. R. Soc. London Ser. B* 122: 477-507.

Haenninen, H., P. Mantere, S. Hernberg, A.M. Seppalainen, and B. Kock. 1979. Subjective symptoms in low-level exposure to lead. *Neurotoxicology* 1: 333-347.

Hammond, E.D., I.J. Selikoff, P.O. Lawther, and H. Seidman. 1976. Inhalation of B[a]P and cancer in man. *Ann. N.Y. Acad. Sci.* 271: 116-124.

Hammond, P.B. and R.P. Beliles. 1980. Metals. In: J. Doull, C.D. Klaassen, and M.O. Amdur (eds.). *Casarett and Doull's Toxicology: The Basic Science of Poisons*, 2nd ed. Macmillan, New York.

Hammond, P.B. and R.P. Beliles. 1980. Metals. In: J. Doull, C.D. Klaassen, and M.O. Amdur. Casarett and Doull's Toxicology: The basic science of poisons, 2nd edition. Macmillan Publishing Co., Inc. New York.

Hancock, D.G., A.E. Moffitt, Jr., and E.B. Hay. 1984. Hematological findings among workers exposed to benzene at a coke oven by-product recovery facility. *Arch. Environ. Health* 39: 414-418.

Hansen, L. 1987a. Food chain modification of the composition and toxicity of polychlorinated biphenyl (PCB) residues. *Reviews in Environmental Toxicology* 3: 149-212, E. Hodgson (Ed.). Elsevier, Amsterdam.

Hansen, L. 1987b. Environmental toxicology of polychlorinated biphenyls. In *Polychlorinated Biphenyls (PCBs): Mammalian and Environmental Toxicology.* Springer-Verlag, Berlin.

Hansen, K., and R.M. Stern. 1983. *In vitro* toxicity and transformation potency of nickel compounds. *Environ. Health Perspect.* 51: 223-226.

Hara, I. 1985. Health status and PCBs in blood of workers exposed to PCBs and of their children. *Environ. Health Perspect.* 59: 85-90.

Harlan, W.R., J.R. Landis, R.L. Schmouder, *et al.* 1988. Blood lead and blood pressure: Relationship in the adolescent and adult US population. *J. Am. Med. Assoc.* 253: 530-534.

Harlan, W.R. 1988. The relationship of blood lead levels to blood pressure in the U.S. population. *Environ. Health Perspect.* 78: 9-13.

Harley, N.H., and T.H. Kneip. 1985. An integrated metabolic model for lead in humans of all ages. Report prepared for U.S. Environmental Protection Agency by New York University School of Medicine, Department of Environmental Medicine, N.Y.

Hecht, S.S., W. Grabowski, and K. Groth. 1979. Analysis of faeces for B[a]P after consumption of charcoal-broiled beef by rats and humans. *Food Cosmet. Toxicol.* 17: 223-227.

Heinrich, U., F. Pott, U. Mohr, R. Fuhst, and J. Koenig. 1986. Lung tumors in rats and mice after inhalation of polycyclic aromatic hydrocarbon-rich emissions. *Exp. Pathol.* 29: 29-34.

Henderson, R.F., P.J. Sabourin, W.E. Bechtold, W.C. Griffith, M.A. Medinsky, L.S. Birnbaum, and G.W. Lucier. 1989. The effect of dose, dose rate, route of administration, and species on tissue and blood levels of benzene metabolites. *Environ. Health Perspect.* 82: 9-17.

Hermann, M. J.P. Durand, J.M. Charpentier, *et al.* 1980. Correlations of mutagenic activity with polynuclear aromatic hydrocarbon content of various mineral oils. Pp. 899-916 in A. Bjorseth and A.J. Dennis, Eds. *Polynuclear Aromatic Hydrocarbons: Chemistry and Biological Effects. Fourth International Symposium.* Battelle Press, Columbus, Ohio.

Hersh, J.H., P.E. Podruch, G. Rogers, *et al.* 1985. Toluene embryopathy. *J. Pediatr.* 106: 922-927.

Hersh, J.H. 1989. Toluene embryopathy: Two new cases. *J. Med. Genet.* 26: 333-337.

Heywood, R., and R.J. Sortwell. 1979. Arsenic intoxication in the Rhesus monkey. *Toxicol. Lett.* 3: 137-144.

Hirata, M., A. Hisanaga, A. Tanaka, and N. Ishinishi. 1988. Glutathione and methylation of inorganic arsenic in hamsters. *Appl. Organomet. Chem.* 2: 315-321.

Hobara, T., H. Kobayashi, E. Higashihara, *et al.* 1982. Experimental examinations and toxicokinetic analysis of the absorption and excretion of 1,1,1-trichloroethane by the lung. *Sangyo Igaku* 24: 599-607. (in Japanese)

Hodgson, R.M., K. Pal, P.L. Grover, and P. Sims. 1982. The metabolic activation of chrysene by hamster embryo cells. *Carcinogenesis* 3: 1051-1056.

Hoffmann, D.J., and M.L. Gay. 1981. Embroyotoxic effects of benzo[a]pyrene, chrysene, and 7,12-dimethylbenz[a]anthracene in petroleum hydrocarbon mixtures in Mallard ducks. *J. Toxicol. Environ. Health* 7: 775-787.

Hoffmann, D., and E.L. Wynder. 1966. Contribution to the carcinogenic action of dibenzopyrenes. *Z. Krebsforsch.* 68: 137-149. (in German)

Hoffmann, D., and E.L. Wynder. 1976. Environmental respiratory carcinogenesis. P. 341 in C.E. Searle, Ed. *Chemical Carcinogens.* ACS Monograph 173. American Chemical Society, Washington, D.C.

Holland, R.H., M.S. McCall, and H.C. Lanz. 1959. A study of inhaled arsenic-74 in man. *Cancer Res.* 19: 1154-1156.

Holmberg, P.C. 1979. Central nervous system defects in children born to mothers exposed to organic solvents during pregnancy. *Lancet* 2: 177.

Hood, R.D., and W.P. Harrison. 1982. Effects of prenatal arsenite exposure in the hamster. *Bull. Environ. Contam. Toxicol.* 29: 671-678.

Hood, R.D., G.C. Vedel-Macrander, M.J. Zaworotko, F.M. Tatum, and R.G. Meeks. 1987. Distribution, metabolism and fetal uptake of pentavalent arsenic in pregnant mice following oral or intraperitoneal administration. *Teratology* 35: 19-25.

Hood, R.D., G.C. Vedel, M.J. Zaworotko, F.M. Tatum, and R.G. Meeks. 1988. Uptake distribution and metabolism of trivalent arsenic in the pregnant mouse. *J. Toxicol. Environ. Health* 25: 423-434.

Howlett, W.P., G.R. Brubaker, N. Mlingi, and H. Rosling. 1990. Konzo, an epidemic upper motor neuron disease studied in Tanzania. *Brain* 113: 223-235.

Hsie, A.W., J.P. O'Neill, J.R. San Sebastian, *et al.* 1979b. Quantitative mammalian cell genetic toxicology: Study of the cytotoxicity and mutagenicity of seventy individual environmental agents related to energy technologies and three subfractions of crude synthetic oil in the CHO/HGPRT system. *Environ. Sci. Res.* 15:219-315.

Hsie, Q.W., M.P. Johnson, D.B. Couch, *et al.* 1979a. Quantitative mammalian cell mutagenesis and a preliminary study of the mutagenic potential of metallic compounds. In: N. Kharsch, Ed. *Trace Metals in Health and Disease.* Raven Press, New York. pp. 55-69.

Hsieh, G.C., R.P. Sharma, and R.D.R. Parker. 1988. Subclinical effects of groundwater contaminants: I. Alteration of humoral and cellular immunity by benzene in CD-1 mice. *Arch. Environ. Contam. Toxicol.* 17: 151-158.

Hueper, W.C., and W.W. Payne. 1962. Experimental studies in metal carcinogenesis: Chromium, nickel, iron, and arsenic. *Arch. Environ. Health* 5: 445-462.

Huggins, C., and N.C. Yang. 1962. Induction and extinction of mammary cancer. *Science* 137: 257-262.

IARC (International Agency for Research on Cancer). 1973. Pp. 178-196 in *IARC Monographs on the Evaluation of Carcinogenic Risk of Chemicals to Man. Vol. 3. Certain Polycyclic Aromatic Hydrocarbons and Heterocyclic Compounds.* International Agency for Research on Cancer, Lyons.

IARC (International Agency for Research on Cancer). 1980a. Arsenic and arsenic compounds. Pp. 39-141 in *IARC Monographs on the Evaluation of the Carcinogenic Risk of Chemicals to Humans. Vol. 23. Some Metals and Metallic Compounds.* World Health Organization, International Agency for Research on Cancer, Lyon, France.

IARC (International Agency for Research on Cancer). 1980b. Chromium and chromium compounds. Pp. 205-324 in *IARC Monographs on the Evaluation of the Carcinogenic Risk of Chemicals to Humans. Vol. 23. Some Metals and Metallic Compounds.* World Health Organization, International Agency for Research on Cancer, Lyon, France.

IARC (International Agency for Research on Cancer). 1980c. Lead and lead compounds. Pp. 325-416 in *IARC Monographs on the Evaluation of the Carcinogenic Risk of Chemicals to Humans. Vol. 23. Some Metals and Metallic Compounds.* World Health Organization, International Agency for Research on Cancer, Lyon, France.

IARC (International Agency for Research on Cancer). 1982. Benzene. Pp. 93-148 in *IARC Monographs on the Evaluation of the Carcinogenic Risk of Chemicals to Humans. Vol. 29. Some Industrial Chemicals and Dyestuffs.* World Health Organization, International Agency for Research on Cancer, Lyon, France.

IARC (International Agency for Research on Cancer). 1983. *IARC Monographs on the Evaluation of the Carcinogenic Risk of Chemicals to Humans. Vol. 32. Polynuclear Aromatic Compounds, Part 1, Chemical, Evironmental and Experimental Data.* World Health Organization, International Agency for Research on Cancer, Lyon, France.

IARC (International Agency for Research on Cancer). 1984. Coal gasification. Pp. 65-99 in *IARC Monographs on the Evaluation of Carcinogenic Risk of Chemicals to Humans. Polynuclear Aromatic Compounds, Part 3. Industrial Exposures in Aluminum Production, Coal Gasification, Coke Production, and Iron and Steel Founding.* World Health Organization, International Agency for Research on Cancer, Lyon, France.

IARC (International Agency for Research on Cancer). 1987. Polychlorinated biphenyls (Group 2A). Pp. 322-326 in *IARC Monographs on the Evaluation of Carcinogenic Risks to Humans. Supplement 7. Overall Evaluations of Carcinogenicity: An Updating of IARC Monographs, Volumes 1 to 42.* World Health Organization, International Agency for Research on Cancer, Lyon, France.

Ide, C.W., and G.R. Bullough. 1988. Arsenic and old glass. *J. Soc. Occup. Med.* 38: 85-88.

Ikeda, M., and H. Ohtsuji. 1972. A comparative study of the excretion of Fujiwara reaction-positive substances in urine of humans and rodents given trichloro- or tetra-chloro-derivatives of ethane and ethylene. *Br. J. Ind. Med.*29: 99-104.

Ikeda, M., M. Kuratsune, Y. Nakamura, and T. Hirohata. 1987. A cohort study on mortality of Yusho patients—A preliminary report. *Fukuoka Acta Med.* 78: 297-300.

Infante, P.F., R.A. Rinsky, J.K. Wagoner, and R.J. Young. 1977. Leukaemia in benzene workers. *Lancet* 2: 76-78.

IPCS (International Programme on Chemical Safety). 1991. *Nickel.* Environmental Health Criteria No. 108. World Health Organization, Geneva. 383 pp.

IPCS (International Programme on Chemical Safety). 1993. *Polychlorinated Biphenyls and Terphenyls*, 2nd ed. Environmental Health Criteria No. 140. World Health Organization, Geneva. 682 pp.

Ishinishi, N., A. Yamamoto, A. Hisanaga, and T. Inamasu. 1983. Tumorigenicity of arsenic trioxide to the lung in Syrian golden hamsters by intermittent instillations. *Cancer Lett.* 21: 141-147.

Jacob, J., A. Schmoldt, G. Raab, M. Hamann, and G. Grimmer. 1983. Induction of specific monooxygenases by isosteric heterocyclic compounds of benz(a)anthracene, benzo(c)phenanthrene and chrysene. *Cancer Lett.* 20: 341-348.

Jacquet, P., A. Leonard, and G.B. Gerber. 1977. Cytogenic investigations on mice treated with lead. *J. Toxicol. Environ. Health* 2: 619-624.

Jennette, K.W. 1982. Microsomal reduction of the carcinogen chromate produced chromium(V). *J. Am. Chem. Soc.* 104: 874-875.

Jerina, D.M., J.M. Sayer, D.R. Thakker, *et al.* 1980. Carcinogenicity of polycyclic aromatic hydrocarbons: The bay-region theory. Pp. 1-12 in B. Pullman, P.O.P. Ts'O, and H. Gelboin, Eds. *Carcinogenesis: Fundamental Mechanisms and Environmental Effects.* D. Reidel Publishing, Hingham, Massachusetts.

Johansson, A., T. Curstedt, B. Robertson, *et al.* 1984. Lung morphology and phospholipids after experimental inhalation of soluble cadmium, copper, and cobalt. Environ. Res. 34:295-309.

Jones, R.D., and D.P. Winter. 1983. Two case reports of deaths on industrial premises attributed to 1,1,1-trichloroethane. *Arch. Environ. Health* 38: 59-61.

Kaden, D.A., R.A. Hites, and W.G. Thilly. 1979. Mutagenicity of soot and associated polycyclic aromatic hydrocarbons to *Salmonella typhimurium.* *Cancer Res.* 39: 4152-4159.

Kanematsu, N., M. Hara and T. Kada. 1980. Rec assay and mutagenicitystudies on metal compounds. Mutat. Res. 77: 109-116.

Kang, H.K., P.F. Infante, and J.S. Carra. 1980. Occupational lead exposure and cancer (letter). *Science* 207: 935-936.

Kao, J., F.K. Patterson, and J. Hall. 1985. Skin penetration and metabolism of topically applied chemicals in six mammalian species, including man: An *in vitro* study with benzo[a]pyrene and testosterone. *Toxicol. Appl. Pharmacol.* 81: 502-516.

Kennaway, E.L. 1924a. On cancer-producing tars and tar-fractions. *J. Ind. Hyg.* 5: 462-488 or

Kennaway, E.L. 1924b. On the cancer-producing factor in tar. *Br. Med. J.* 1: 564-567.

Kennedy, G.L., and D.W. Arnold. 1971. Absence of mutagenic effects after treatment of mice with lead compounds. *Environ. Mutag. Soc. Newsl.* 5:37.

Kiefer, F., O. Cumpelik, and F.J. Wiebel. 1988. Metabolism and cytotoxicity of benzo(a)pyrene in the human lung tumour cell line NCI-H322. *Xenobiotica* 18: 747-755.

Kim, M.K., A.M. Fisher, and R.J. MacKay. 1969. Pulmonary Effects of Metallic Dusts--Nickel and Iron. University of Toronto School of Hygiene, Department of Physiological Hygiene, Toronto. 24 pp.

Kimbrough, R.D., R.E. Linder, and T.B. Gaines. 1972. Morphological changes in livers of rats fed polychlorinated biphenyls. Light microscopy and ultrastructure. *Arch. Environ. Health* 25: 354-364.

Kimbrough, R.D., R.A. Squire, R.E. Linder, J.D. Stranberg, R.J. Montali, and V.W. Burse. 1975. Induction of liver tumours in Sherman strain female rats by polychlorinated biphenyl Aroclor 1260. *J. Nat. Cancer Inst.* 55: 1453-1459.

Kissling, M. and B. Speck. 1973. Chromosome aberrations in experimental benzene intoxication. *Helv. Med. Acta.* 36:59-66.

Klein, M. 1963. Susceptibility of strain B6AF/J hybrid infant mice to tumorigenesis with 1,2-benzanthracene, deoxycholic acid, and 3-methylcholanthrene. *Cancer. Res.* 23: 1701-1707.

Klemme, J.C., H. Mukhtar, and C.A. Elmets. 1987. Induction of contact hypersensitivity to dimethylbenz(a)anthracene and benzo(*a*)pyrene in C3H/HeN mice. *Cancer Res.* 47: 6074-6078.

Koller, L.D., N.I. Kerkvliet, and J.H. Exon. 1985. Neoplasia induced in male rats fed lead acetate, ethylurea and sodium nitrite. *Toxicologic Pathol.* 13: 50-57.

Koren, G., N. Chang, R. Gonen, J. Klein, L. Weiner, H. Demshar, S. Pizzolato, I. Radde, and J. Shime. 1990. Lead exposure among mothers and their newborns in Toronto. *Can. Med. Assoc. J.* 142: 1241-1244.

Kup, W. 1978. Work-related origin of cancer in the nose, mouth, throat, larynx. *Akad. Wiss.* 2: 20-25.

Kuratsune, M., T. Yoshimura, J. Matsuzake, and A. Yamaguchi. 1972. Epidemiologic study on Yusho, a poisoning caused by ingestion of rice-oil contaminated with a commercial brand of polychlorinated biphenyls. *Environ. Health Perspect.* 1: 119-128.

Kushi, A., T. Matsumoto, and D. Yoshida. 1983. Mutagen from the gaseous phase of protein pyrolyzate. *Agric. Biol. Chem.* 47: 1979-1982.

Lan, S., Y. Yen., Y. Ko, and E. Chen. 1989. Growth and development of permanent teeth germ of transplacental Yu-Cheng babies in Taiwan. *Bull. Environ. Contam. Toxicol.* 42: 931-943.

Landau, E.D., D.J. Thompson, R.G. Feldman, *et al.* 1977. *Selected Noncarcinogenic Effects of Industrial Exposure to Inorganic Arsenic.* Report No. EPA 560/6-77-018. U.S. Environmental Protection Agency, Washington, D.C.

Lang. 1933. Die Rhodanbildung im Tierkorper. *Biochem. Zeitschrift.* 259: 243-256. (in German)

Langard, S., A. Anderson, and B. Gylseth. 1980. Incidence of cancer among ferrochromium and ferrosilicon workers. *Br. J. Ind. Med.* 37: 114-120.

Larramendy, M.L., N.C. Popescu, and J.A. DiPaola. 1981. Induction by inorganic metal salts of sister chromatid exchanges and chromosome aberrations in human and Syrian hamster cell strains. *Environ. Mutag.* 3:597-606.

Laskin, S., M. Kuscher, and R.T. Dres. 1970. Studies in pulmonary carcinogenesis. Pp. 321-351 in M.G. Hanna, P. Nettesheim, and J. Gilbert, Eds. *Inhalation Carcinogenesis.* AEC Symposium Series No. 18. U.S. Atomic Energy Commission, Oak Ridge Division of Technical Information, Oak Ridge, Tennessee.

Latriano, L., B.D. Goldstein, and G. Witz. 1986. Formation of muconaldehyde, an open-ring metabolite of benzene, in mouse liver microsomes: An additional pathway for toxic metabolites. *Proc. Nat. Acad. Sci. (USA)* 83: 8356-8360.

LaVoie, E.J., J. Braley, J.E. Rice, and A. Rivenson. 1987. Tumorigenic activity for non-alterant polynuclear aromatic hydrocarbons in newborn mice. *Cancer Lett.* 34: 15-20.

LaVoie, E.J., V. Bedenko, N. Hirota, S.S. Hecht, and D. Hoffmann. 1979. A comparison of the mutagenicity, tumor-initiating activity and complete carcinogenicity of polynuclear aromatic hydrocarbons. Pp. 705-721 in P.W. Jones and P. Leber, Eds. *Polynuclear Aromatic Hydrocarbons.* Ann Arbor Science, Ann Arbor, Michigan.

LaVoie, E.J., S.S. Hecht, V. Bedenko, and D. Hoffmann. 1982b. Identification of the mutagenic metabolites of fluoranthene, 2-methylfluoranthene and 3-methylfluoranthene. *Carcinogenesis* 3: 841-846.

LaVoie, E.J., S.S. Hecht, S. Amin, V. Bedenko, and D. Hoffmann. 1980. Identification of mutagenic dihydrodiols as metabolites of benzo[j]fluoranthene and benzo[k]fluoranthene. *Cancer Res.* 40:4528-4532.

LaVoie, E.J., L. Tulley-Freiler, V. Bedenko, Z. Girach, and D. Hoffmann. 1981a. Comparative studies on the tumor initiating activity and metabolism of methylfluorenes and methylbenzofluorenes. Pp. 417-427 in M. Cooke and A.J. Dennis, Eds. *Polynuclear Aromatic Hydrocarbons: Chemical Analysis and Biological Fate. 5th International Symposium.* Battelle Press, Columbus, Ohio.

LaVoie, E.J., L. Tulley-Freiler, V. Bedenko, and D. Hoffmann. 1981b. Mutagenicity, tumor-initiating activity, and metabolism of methylphenanthrenes. *Cancer Res.* 41: 3441-3447.

LaVoie, E.J., S. Amin, S.S. Hecht, L. Furuya, and D. Hoffmann. 1982a. Tumor initiating activity of dihydrodiols of benzo(*b*)fluoranthene, benzo(*j*)fluoranthene, and benzo(*k*)fluoranthene. *Carcinogenesis* 3: 49-52.

Law, L.W. 1938. The effects of chemicals on the lethal mutation rate indrosophilia melanogaster. Proc. Natl. Acad. Sci., USA. 24: 546-550.

Levin, W., A.W. Wood, R.L. Chang, H. Yagi, H.D. Mah, D.M. Jerina, and A.H. Conney. 1978. Evidence for bay region activation of chrysene 1,2-dihydrodiol to an ultimate carcinogen. *Cancer Res.* 38: 1831-1834.

Levis, A.G., M. Buttignol, V. Bianchi, and G. Sponza. 1978. Effects of potassium dichromate on nucleic acid and protein syntheses and on precursor uptake in BHK fibroblasts. *Cancer Res.* 38: 110-116.

Liebscher, K., and H. Smith. 1968. Essential and nonessential trace elements. A method of determining whether an element is essential or nonessential in human tissue. *Arch. Environ. Health* 17: 881-890.

Lijinsky, W., and H. Garcia. 1972. Skin carcinogenesis tests of hydrogenated derivatives of anthanthrene and other polynuclear hydrocarbons. *Z. Krebsforsch. Klin. Onkol.* 77: 226-230.

Lindberg, E., and G. Hedenstierna. 1983. Chrome plating. Symptoms, findings in the upper airway, and effects of lung function. *Arch. Environ. Health* 38: 367-374.

Litton Bionetics, Inc. 1981. Mutagenicity Evaluation of Toluene. Mouse Dominant Lethal Assay. LBI Project No. 21141-05. Final report to American Petroleum Institute, Washington, D.C. Litton Bionetics, Inc., Kensington, Maryland.

Lloyd, J.W. 1971. Long-term mortality study of steelworkers. V. Respiratory cancer in coke plant workers. *J. Occup. Med.* 13: 53-68.

Lovell, M.A., and J.G. Farmer. 1985. Arsenic speciation in urine from humans intoxicated by inorganic arsenic compounds. *Hum. Toxicol.* 4: 203-214.

Lu, Y., and Y. Wu. 1985. Clinical findings and immunological abnormalities in Yu-Cheng patients. *Environ. Health Perspect.* 59: 17-29.

Lubet, R.A., E. Kiss, M.M. Gallagher, C. Dively, R.E. Kouri, and L.M. Schectman. 1983. Induction of neoplastic transformation and DNA single-strand breaks in C3H/10T1/2 clone 8 cells by polycyclic hydrocarbons and alkylating agents. *J. Natl. Cancer Inst.* 71: 991-997.

Lundborg , M. and P. Camner. 1984. Lysozyme levels in rabbit lung after inhalation ofnickel, cadmium, cobalt, and copper chlorides. Environ. Res. 34:335-342.

Lutz, R., and R. Dedrick. 1987. Physiologic pharmacokinetic modeling of polychlorinated biphenyls. In *Polychlorinated Biphenyls (PCBs): Mammalian and Environmental Toxicology.* Springer-Verlag, Berlin.

Lyapkalo, A.A. 1973. Genetic activity of benzene and toluene. *Gig. Tr. Prof. Zabol.* 17(3): 24-28. (in Russian)

Mackell, J.V., F. Rieders, H. Brieger, *et al.* 1951. Acute hemolytic anemia due to ingestion of naphthalene moth balls. I. Clinical aspects. *Pediatrics* 7: 722-727.

MacKenzie, R.D., R.U. Byerrum, C.F. Decker, C.A. Hoppert, and R.F. Langham. 1958. Chronic toxicity studies. II. Hexavalent and trivalent chromium administered in drinking water to rats. *AMA Arch. Ind. Health* 18: 232-234.

MacKenzie, K.M., and D.M. Angevine. 1981. Infertility in mice exposed in utero to benzo[*a*]pyrene. *Biol. Reprod.* 24: 183-191.

MacNicoll, A.D., P.M. Burden, H. Rattle, P.L. Grover, and P. Sims. 1979. The formation of dihydrodiols in the chemical or enzymic oxidation of dibenz[a,c]anthracene, dibenz[a,h]anthracene and chrysene. *Chem.-Biol. Interact.* 27: 365-379.

MacNicoll, A.D., P.L. Grover, and P. Sims. 1980. The metabolism of a series of polycyclic hydrocarbons by mouse skin maintained in short-term organ culture. *Chem.-Biol. Interact.* 29: 169-188.

Mahvi, D., H. Bank, and R. Harley. 1977. Morphology of a naphthalene-induced bronchiolar lesion. *Am. J. Pathol.* 86: 559-572.

Maiorino, R.M., and H.V. Aposhian. 1985. Dimercaptan metal-binding agents influence the biotransformation of arsenite in the rabbit. *Toxicol. Appl. Pharmacol.* 77: 240-250.

Maisin, J., M. Rome, and L. Jacqmin. 1926. Method for obtaining non-carcinogenic tars. *C.R. Soc. Biol.* 94: 767-769. (in French)

Maisin, J., P. Desmedt, and L. Jacqmin. 1927. Carcinogenic action of carbazole. *C.R. Soc. Biol.* 96: 1056-1058. (in French)

Maltoni, C., and C. Scarnato. 1979. First experimental demonstration of the carcinogenic effects of benzene: Long-term effects on Sprague-Dawley rats by oral administration. *Med. Lav.* 70: 352. (in Italian)

Maltoni, C., B. Conti, and G. Cotti. 1983. Benzene: A multipotential carcinogen. Results of long-term bioassays performed at the Bologna Institute of Oncology. *Am. J. Ind. Med.* 4: 589-630.

Maltoni, C., G. Lefemine, and G. Cotti. 1986. Experimental research on trichloroethylene carcinogenesis. In: C. Maltoni and M.A. Mehlman (Eds.). *Archives of Research on Industrial Carcinogenesis Series. Vol. V.* Princeton Scientific, Princeton, N.J.

Mamber, S.W., V. Bryson, and S.E. Katz. 1983. The Esherichia coli WP2/WP100 rec assay for detection of potential chemical carcinogens. *Mutat. Res.* 119: 135-144.

Mancuso, T.F. 1975. Consideration of chromium as an industrial carcinogen. Pp. 343-356 in T.C. Hutchinson, Ed. *International Conference on Heavy Metals in the Environment, Toronto, Ontario, Canada, October 27-31.* Toronto Institute for Environmental Studies, Toronto.

Mappes, R. 1987. Experiments on the excretion of arsenic in urine. *Int. Arch. Occup. Environ. Health* 40: 267-272. (in German)

Marafante, E., M. Vahter, and J. Envall. 1985. The role of the methylation in the detoxication of arsenate in the rabbit. *Chem. Biol. Interact.* 56: 225-238.

Marafante, E., and M. Vahter. 1987. Solubility, retention and metabolism of intratracheally and orally administered inorganic arsenic compounds in the hamster. *Environ. Res.* 42: 72-82.

Maroni, M., A. Colombi, G. Arbosti, S. Cantoni, and V. Foa. 1981. Occupational exposure to polychlorinated biphenyls in electrical workers: II. Health effects. *Brit. J. Ind. Med.* 38: 55-60.

Martin, C.N., A.C. McDermid, and R.C. Garner. 1981. Testing of 42 coded compounds for their ability to induce unscheduled DNA repair synthesis in HeLa cells. *Progr. Mutat. Res.* 1: 533-537.

Masuda, Y., R. Kagawa, K. Shimamura, M. Takada, and M. Kuratsune. 1974. Polychlorinated biphenyls in the blood of Yusho patients and ordinary persons. *Fukuoka Acta Med.* 65: 25-27. (in Japanese)

Matsui, S. 1980. Evaluation of a Bacillus subtilis rec-assay for thedetection of mutagens which may occur in water environments. Water Res.14(11): 1613-1619.

Mazumdar, S., C.K. Redmond, W. Sollecito, and N. Sussman. 1975. An epidemiological study of exposure to coal tar pitch volatiles among coke oven workers. *J. Air Pollut. Control Assoc.* 25: 382-389.

McCann, J., E. Choi, E. Yamasaki, and B.N. Ames. 1975. Detection of carcinogens as mutagens in the *Salmonella*/microsome test: Assay of 300 chemicals. *Proc. Natl. Acad. Sci. USA* 72: 5135-5139.

McCormick, D. 1981. Inhibition of benzo[*a*]pyrene-induced mammary carcinogenesis by retinyl acetate. *J. Nat. Cancer Inst.* 66: 559-564.

McLure, K.M., and B. MacMahon. 1980. An epidemiologic perspective of environmental carcinogenesis. *Epidemiol. Rev.* 2: 19-48.

McNamara, B.P. 1976. Estimates of the Toxicity of Hydrocyanic Acid Vapors in Man. Report No. EB-TR-76023. US Department of the Army, Edgewood Arsenal, Aberdeen Proving Ground, Maryland. Available from NTIS (National Technical Information Service), Springfield, Virginia 22161, as AD-A028501/5.

McNulty, W.P. 1985. Toxicity and fetotoxicity of TCDD, TCDF and PCB isomers in Rhesus macaques (*Macaca mulatta*). *Environ. Health Perspect.* 60: 77-88.

McNutt, N., R. Amster, E. McConnell, and F. Morris. 1975. Hepatic lesions in mice after continuous exposure to 1,1,1-trichloroethane. *Lab. Invest.* 32: 642-654.

Medinsky, M.A., P.J. Sabourin, G. Lucier, L.S. Birnbaum, and R.F. Henderson. 1989. A physiological model for simulation of benzene metabolism by rats and mice. *Toxicol. Appl. Pharmacol.* 99: 193-206.

Meyne, J., and M.S. Legator. 1980. Sex-related differences in cytogenetic effects of benzene in the bone marrow of Swiss mice. *Environ. Mutat.* 2: 43-50.

Miescher, G. 1942. Experimental studies on the formation of tumours by photosensitization. *Schweiz. Med. Wochenschr.* 72: 1082-1084. (in German)

Miyaki, M., N. Akamatsu, T. Ono, and H. Koyama. 1979. Mutagenicity of metal cations in cultured cells from chinese hamster. *Mutat. Res.* 68:259-263.

Monster, A.C., G. Boersma, and H. Steenweg. 1979. Kinetics of 1,1,1-trichloroethane in volunteers; Influence of exposure concentration and work load. *Int. Arch. Occup. Environ. Health* 42: 293-301.

Monteith, D.K., A. Novotny, G. Michalopoulos, and S.C. Strom. 1987. Metabolism of benzo(a)pyrene in primary cultures of human hepatocytes: Dose-response over a four-log range. *Carcinogenesis* 8: 983-988.

Moore, M.R., P.A. Meredith, W.S. Watson, D.J. Sumner, M.K. Taylor, and A. Goldberg. 1980. The percutaneous absorption of lead-203 in humans from cosmetic preparations containing lead acetate, as assessed by whole-body counting and outher techniques. *Food Cosmet. Toxicol.* 18: 399-405.

Morgan, A., A. Black, and D.R. Belcher. 1972. Studies on the absorption of halogenated hydrocarbons and their excretion in breath using ^{38}Cl tracer techniques. *Ann. Occup. Hyg.* 15: 273-282.

Moriya, M., T. Ohta, K. Watanabe, T. Miyazawa, K. Kato and Y. Shirasu.1983. Further mutagenicity studies on pesticides in bacterial reversionassay systems. Mutat. Res. 116(3-4): 185-216.

Morris, H.P., C.A. Velat, B.P. Wagner, M. Dahlgard, and F.E. Ray. 1960. Studies of carcinogenicity in the rat of derivatives of aromatic amines related to N-2-fluorenylacetamide. *J. Natl. Cancer Inst.* 24: 149-180.

Morton, W.E., and G.A. Caron. 1989. Encephalopathy: An uncommon manifestation of workplace arsenic poisoning? *Am. J. Ind. Med.* 15: 1-5.

Müller, E. 1968. Carcinogenic substances in water and soils. XX. Studies on the carcinogenic properties of 1,12-benzoperylene. *Arch. Hyg.* 152: 23-36. (in German)

Muro, L.A., and R.A. Goyer. 1969. Chromosome damage in experimental lead poisoning. *Arch. Pathol.* 87: 660-663.

Nagasaki, H., S. Tomii, T. Mega, M. Marugami, and N. Ito. 1972. Hepatocarcinogenicity of polychlorinated biphenyls in mice. *Gann* 63: 805.

Nagymajtenyi, L., A. Selypes, and G. Berencsi. 1985. Chromosomal aberrations and fetotoxic effects of atmospheric arsenic exposure in mice. *J. Appl. Toxicol.* 5: 61-63.

Nahum, L.H., and H.E. Hoff. 1934. The mechanism of sudden death in experimental acute benzol poisoning. *J. Pharmacol. Exp. Therap.* 50: 336-345.

Nakanishi, Y., N. Shigematsu, Y. Kurita, K. Matsuba, H. Kanegae, S. Ishimura, and Y. Kawazoe 1985. Respiratory involvement and immune status in Yusho patients. *Environ. Health Perspect.* 59: 31-36.

Narbonne, J.F., P. Cassand, P. Alzieu, P. Grolier, G. Mrlina, and J.P. Calmon. 1987. Structure-activity relationships of the *N*-methylcarbamate series in *Salmonella typhimurium*. *Mutat. Res.* 191: 21-27.

NCI (National Cancer Institute). 1978. *Bioassay of 1,1,2,2,-Tetrachloroethane for possible carcinogenicity.* U.S. Dept. Health, Education and Welfare. Pub. No. (NIH) 78-827).

NCI (National Cancer Institute). 1977. *Bioassay of 1,1,1-Trichloroethane for Possible Carcinogenicity.* NCI Technical Report Series 3. National Cancer Institute, Bethesda, Maryland. Available from NTIS (National Technical Information Service), Springfield, Virginia 22161, as PB265 082.

NCI (National Cancer Institute). 1978. *Bioassay of 1,1,2-Trichloroethane for Possible Carcinogenicity.* Technical Report Series No. 74, Publication No. NIH 78-1324. U.S. Department of Health, Education and Welfare, National Institutes of Health, National Cancer Institute, Bethesda, Maryland.

Neal, J., and R.H. Rigdon. 1967. Gastric tumors in mice fed benzo[*a*]pyrene: A quantitative study. *Tex. Rep. Biol. Med.* 25: 553-557.

Nestmann, E.R., T.I. Matula, G.R. Douglas, K.C. Bora, and D.J. Kowbel. 1979. Detection of the mutagenic activity of lead chromate using a battery of microbial tests. *Mut. Res.* 66: 357-365.

Nestmann, E.R., E.G.H. Lee, T.I. Matula, G.R. Douglas, and J.C. Mueller. 1980. Mutagenicity of constituents identified in pulp and paper mill effluents using the *Salmonella*/mammalian-microsome assay. *Mutat. Res.* 79: 203-212.

Nishioka, H. 1975. Mutagenic activities of metal compounds in bacteria.Mutat. Res. 31: 185-189.

Nolan, R.J., N.L. Freshour, and D.L. Rick. 1984. Kinetics and metabolism of inhaled methyl chloroform (1,1,1-trichloroethane) in male volunteers. *Fund. Appl. Toxicol.* 4: 654-662.

Norback, D., and R. Weltman. 1985. Polychlorinated biphenyl induction of hepatocellular carcinoma in the Sprague-Dawley rat. *Environ. Health Perspect.* 60: 97-105.

Nordqvist, M., D.R. Thakker, W. Levin, H. Yagi, D.E. Ryan, P.E. Thomas, A.H. Conney, and D.M. Jerina. 1979. The highly tumorigenic 3,4-dihydrodiol is a principal metabolite formed from dibenzo[a,h]anthracene by liver enzymes. *Mol. Pharmacol.* 16: 643-655.

Nordqvist, M., D.R. Thakker, K.P. Vyas, H. Yagi, W. Levin, D.E. Ryan, P.E. Thomas, A.H. Conney, and D.M. Jerina. 1981. Metabolism of chrysene and phenanthrene to bay-region diol epoxides by rat liver enzymes. *Mol. Pharmacol.* 19: 168-178.

Norgaard, O. 1955. Investigation with radioactive Ni-57 into the resorption of nickel through the skin in normal and in nickel-hypersensitive persons. *Acta Dermatovenereol.* 35: 111-117.

Nousiainen, U., R. Torronen, and O. Hanninen. 1984. Differential induction of various carboxylesterases by certain polycyclic aromatic hydrocarbons in the rat. *Toxicology* 32: 243-251.

NRC (National Research Council). 1975. *Nickel.* National Academy of Sciences, Washington, D.C. 277 pp.

NRC (National Research Council). 1977. *Drinking Water and Health*, pp. 331-333. National Academy of Sciences, Washington, D.C.

NRC (National Research Council). 1978. *Sulfur Oxides.* National Academy of Sciences, Washington, D.C. 209 pp.

NRC (National Research Council). 1989. *Diet and Health. Implications for Reducing Chronic Disease Risk.* National Academy Press, Washington, D.C. 768 pp.

NTP (National Toxicology Program). 1986. *Toxicology and Carcinogenesis Studies of Benzene (CAS No. 71-43-2) in F344/N Rats and B5C3F$_1$ Mice (Gavage Studies).* Technical Report Series No. 289. NIH Publication No. 86-2545. National Toxicology Program, Research Triangle Park, North Carolina. 277 pp.

NTP (National Toxicology Program). 1990. *Toxicology and Carcinogenesis Studies of Toluene (CAS No. 108-88-3) in F344/N Rats and B6C3F$_1$ Mice (Inhalation Studies).* Technical Report Series No. 371. NIH Publication No. 90-2826. National Toxicology Program, Research Triangle Park, North Carolina. 253 pp.

NTP (National Toxicology Program). 1992. *Toxicology and Carcinogenesis Studies of Naphthalene (CAS No. 91-20-3) in B6C3F$_1$ Mice (Inhalation Studies).* Technical Report Series No. 410. NIH Publication No. 91-3141. U.S. Department of Health and Human Services, Public Health Service, National Institutes of Health, National Toxicology Program, Research Triangle Park, North Carolina. 168 pp.

O'Brien, K.A.F., L. Smith, and G.M. Cohen. 1985. Differences in naphthalene induced toxicity in the mouse and rat. *Chem. Biol. Interact.* 55:.109-122.

O'Bryan, T.R., and R.H. Ross. 1988. Chemical scoring system for hazard and exposure identification. *J. Toxicol. Environ. Health* 1: 119-134.

Oesch, F., M. Bücker, and H.R. Glatt. 1981. Activation of phenanthrene to mutagenic metabolites and evidence for at least two different activation pathways. *Mutat. Res.* 81: 1-10.

Ogata, M., K. Tomokuni, and Y. Takatsuka. 1970. Urinary excretion of hippuric acid and m- or p-methylhippuric acid in the urine of persons exposed to vapours of toluene and m- or p-xylene as a test of exposure. *Br. J. Ind. Med.* 27: 43-50.

Ott, M.G., B.B. Holder, and H.I. Gordon. 1974. Respiratory cancer and occupational exposure to arsenicals. *Arch. Environ. Health* 29: 250-255.

Ott, M.G., J.C. Townsend, W.A. Fishbeck, and R.A. Langner. 1978. Mortality among workers occupationally exposed to benzene. *Arch. Environ. Health* 33: 3-10.

Ottolenghi, A.D., J.K. Haseman, W.W. Payne, H.L. Falk, and H.N. MacFarland. 1974. Inhalation studies of nickel sulfide in pulmonary carcinogenesis of rats. *J. Nat. Cancer Inst.* 54: 1165-1172.

Ouw, H., G. Simpson, and D. Siyali. 1976. Use and health effects of Aroclor 1242, a polychlorinated biphenyl, in an electrical industry. *Arch. Environ. Health.* 31: 189-194.

Painter, R.B., and R. Howard. 1982. The HeLa-DNA synthesis inhibition test as a rapid screen for mutagenic carcinogens. *Mutat. Res.* 92: 427-437.

Panthanickal, A., and L.J. Marnett. 1981. Arachidonic acid-dependent metabolism of (+/-)-7,8-dihydroxy-7,8-dihydrobenzo[a]pyrene to polyguanylic acid-binding derivatives. *Chem. Biol. Interact.* 33: 239-252.

Pelkonen, O., and D.W. Nebert. 1982. Metabolism of polycyclic aromatic hydrocarbons: etiologic role in carcinogenesis. *Pharmacol. Rev.* 34: 189-222.

Peltonen, L. 1979. Nickel sensitivity in the general population. *Contact Dermatit.* 5(1): 27-32.

Penn, J.G. 1993. Grain size analysis of 22 samples by hydrometric measurement. Hardin-Kight Associates, Inc., Hanover, Maryland.

Perry, K., R.G. Bowler, H.M. Buckell, H.A. Druett, and R.S.F. Shilling. 1948. Studies in the incidence of cancer in a factory handling inorganic compounds of arsenic. II. Clinical and environmental investigations. *Br. J. Ind. Med.* 5: 6-15.

Pershagen, G. 1985. Lung cancer mortality among men living near an arsenic-emitting smelter. *Am. J. Epidemiol.* 122: 684-694.

Pershagen, G., and N.E. Bjorklund. 1985. On the pulmonary tumorigenicity of arsenic trisulfide and calcium arsenate in hamsters. *Cancer Lett.* 27: 99-104.

Petrilli, F.L., G.A. Rossi, A. Camoirano, M. Romano, D. Serra, C. Bennicelli, A. De Flora, and S. De Flora. 1986. Metabolic reduction of chromium by alveolar macrophages and its relationships to cigarette smoke. *J. Clin. Invest.* 77:1917-1924.

Pfaffenberger, C.D., A.J. Peoples, and H.F. Enos. 1980. Distribution of volatile halogenated organic compounds betwen rat blood serum and adipose tissue. *Int. J. Environ. Anal. Chem.* 8:55-65.

Pfeiffer, E.J. 1977. Oncogenic interaction of carcinogenic and noncarcinogenic polycyclic aromatic hydrocarbons in mice. Pp. 69-77 in U. Mohr, D. Schmähl, and L. Tomatis, Eds. *Air Pollutants and Cancer in Man.* International Agency for Research on Cancer, Lyon, France.

Phillips, D.H., P.L. Grover, and P. Sims. 1979. A quantitative determination of the covalent binding of a series of polycyclic hydrocarbons to DNA in mouse skin. *Int. J. Cancer* 23: 201-208.

Pinto, S.S., and C.M. McGill. 1953. Arsenic trioxide exposure in industry. *Ind. Med. Surg.* 22: 281-287.

Poel, W.E. 1963. Skin as a test site for the bioassay of carcinogens and carcinogen precursors. *Natl. Cancer Inst. Monogr.* 10: 611-625.

Pokrovskaya, L.V., and N.K. Shabynina. 1973. Carcinogenic hazards in the production of chromium ferroalloys. *Gig. Tr. Prof. Zabol.* 10: 23-26.

Pott, F., U. Ziem, F.-J. Reiffer, F. Huth, H. Ernst, and U. Mohr. 1987. Carcinogenicity jstudies on fibres, metal compounds, and some other dusts in rats. *Exp. Pathol.* 32: 129-152.

Pott, P. 1775. P. 208 in L. Hawes, W. Clarke, and R. Collins. *Chirurgical Observations Relative to the Cataract, the Polypos of the Nose, the Cancer in the Scrotum, the Different Kinds of Ruptures, and the Mortification of the Toes and Feet.* London. Reprinted in *Nat. Cancer Inst. Monogr.* 10: 7, 1963.

Potts, A.M. 1986. Toxic responses of the eye; naphthalene. P. 492-493 in C.D. Klaassen, M.D. Amdur, and J. Doull, Eds. *Casarett and Doull's Toxicology*, 3rd ed. MacMillan, New York.

Prendergast, J.A., R.A. Jones, L.J. Jenkins Jr., *et al.* 1967. Effects on experimental animals of long-term inhalation of trichloroethylene, carbon tetrachloride, 1,1,1-trichloroethane, dichlorodifluoromethane, and 1,1-dichloroethylene. *Toxicol. Appl. Pharmacol.* 10:270-289.

Prukop, J.A., and N.L. Savage. 1986. Some effects of multiple, sublethal doses of monosodium methanearsonate (MSMA) herbicide on hematology, growth, and reproduction of laboratory mice. *Bull. Environ. Contam. Toxicol.* 36: 337-341.

Prystowsky, S.D., A.M. Allen, R.W. Smith, J.H. Nonomura, R.B. Odom, and W.A. Akers. 1979. Allergic contact hypersensitivity to nickel, neomycin, ethylenediamine, and benzocain. Relationships between age, sex, history of exposure, and reactivity to standard patch tests and use tests in a general population. *Arch. Dermatol.* 115: 959-965.

Purde, M., and S. Etlin. 1980. Cancer cases among workers in the Estonia oil shale processing industry. Pp. 527-528 in *Health Implications of New Energy Technologies.* Ann Arbor Science, Ann Arbor, Michigan.

Puzanova, L., M. Doskocil, and A. Doubkova. 1978. Disturbances of the development of chick embryos after the administration of beryllium chloride at early stages of embryogenesis. *Folia Morphologica* 26:228-231.

Quast, J.F., B.K.J. Leong, L.W. Rampy, and P.J. Gehring. 1978. Toxicologic and Carcinogenic Evaluation of a Methylchloroform (1,1,1-Trichloroethane) Formulation by Chronic Inhalation in Rats. Interim Report after 24 Months. Dow Chemical Company, Midland, Michigan.

Rabinowitz, M.B., A. Leviton, and H. Needleman. 1973. Lead metabolism in the normal human: Stable isotope studies. *Science* 182: 725-727.

Rabinowitz, M.B., G.W. Wetherill, and J.D. Kopple. 1976. Kinetic analysis of lead metabolism in healthy humans. *J. Clin. Invest.* 58: 260-270.

Raffetto, G., S. Parodi, C. Parodi, M. DeFerrari, R. Troiano, and G. Brambilla. 1977. Direct interaction with cellular targets as the mechanism for chromium carcinogenesis. *Tumori* 63: 503-512.

Rahman, A., J.A. Barrowman, and A. Rahimtula. 1986. The influence of bile on the bioavailability of polynuclear aromatic hydrocarbons from the rat intestine. *Can. J. Physiol. Pharmacol.* 64: 1214-1218.

Randall, J.A., and R.S. Gibson. 1987. Serum and urine chromium as indices of chromium status in tannery workers. *Proc. Soc. Exp. Biol. Med.* 185: 16-23.

Redmond, E., B. Strobino, and R. Cypress. 1976. Cancer experience among coke by-product workers. *Ann. N.Y. Acad. Sci.* 2-7: 102-115.

Rees, J.R., and A. Pirie. 1967. Possible reactions of 1,2-naphthaquinone in the eye. *Biochem. J.* 102: 853-863.

Rees, E.D., P. Mandelstan, J.Q. Lowry, *et al.* 1971. A study of the mechanism of intestinal absorption of benzo[a]pyrene. *Biochim. Biophys. Acta* 225: 96-107.

Reid, W.D., K.F. Ilett, J.M. Glick, and G. Krishna. 1973. Metabolism and binding of aromatic hydrocarbons in the lung. *Am. Rev. Respir. Dis.* 107: 539-551.

Rhoads, K., and C.L. Sanders. 1985. Lung clearance, translocation and acute toxicity of arsenic, beryllium, cadmium, cobalt, lead, selenium, vanadium, and ytterbium oxides following deposition in rat lung. *Environ. Res.* 36: 359-378.

Rice, J.E., T.J. Hosted, Jr., M.C. DeFloria, E.J. LaVoie, D.L. Fischer, and J.C. Wiley, Jr. 1986. Tumor-initiating activity of major in-vivo metabolites of indeno[1,2,3-cd]pyrene on mouse skin. *Carcinogenesis* 7: 1761-1764.

Riegel, B., W.B. Wartman, W.T. Hill, B.B. Reeb, P. Shubik, and D.W. Stanger. 1951. Delay of methycholanthrene skin carcinogenesis in mice by 1,2,5,6-dibenzofluorene. *Cancer Res.* 33: 499-537.

Rigdon, R.H., and E.G. Rennels. 1964. Effect of feeding benzpyrene on reproduction in the rat. *Experimentia* 20: 224-226.

Rigdon, R.H., and J. Neal. 1965. Effects of feeding benzo[*a*]pyrene on fertility, embryos, and young mice. *J. Nat. Cancer Inst.* 34: 297-305.

Rinsky, R.A., A.B. Smith, R. Hornung, T.G. Filloon, R.J. Young, A.H. Okun, and P.J. Landrigan. 1987. Benzene and leukemia: An epidemiological risk assessment. *New Eng. J. Med.* 316: 1044-1050.

Robison, S.H., and M. Costa. 1982. The induction of DNA strand breakage of nickel compounds in cultured Chinese hamster ovary cells. *Cancer Lett.* 15: 35-40.

Roe, F.J.C. 1962. Effect of phenanthrene on tumour-initiation by 3,4-benzopyrene. *Br. J. Cancer* 16: 503-506.

Rogan, W., B. Gladen, K. Hung, S. Koong, L. Shih, J. Taylor, Y. Wu, D. Yang, N. Ragan, and C. Hsu. 1987. Polychlorinated biphenyls (PCBs) and dichlorodiphenyl dichlorethene (DDE) in human milk: Effects on growth, morbidity and duration of lactation. *Am. J. Public Health* 77: 1294-1297.

Rogers, E.H., N. Chernoff, and R.J. Kavlock. 1981. The teratogenic potential of cacodylic acid in the rat and mouse. *Drug Chem. Toxicol.* 4: 49-61.

Rosenkranz, H.S. 1977. Mutagenicity of halogenated alkanes and their derivatives. Environ. Health Perspect. 21: 79-84.

Rosenkranz, H.S., and L.A. Poirier. 1979. Evaluation of the mutagenicity and DNA-modifying activity of carcinogens and noncarcinogens in microbial systems. *J. Nat. Cancer Inst.* 62: 873-892.

Rosenthal, G.J., and C.A. Snyder. 1985. Modulation of the immune response to *Listeria monocytogenes* by benzene inhalation. *Toxicol. Appl. Pharmacol.* 80: 502-510.

Roszinsky-Köcher, G., A. Basler, and G. Röhrborn. 1979. Mutagenicity of polycyclic hydrocarbons. V. Induction of sister-chromatid exchanges *in vivo*. *Mutat. Res.* 66: 65-67.

Rozen, M.G., C.A. Snyder, and R.E. Albert. 1984. Depression in B- and T-lymphocyte mitogen-induced blastogenesis in mice exposed to low concentrations of benzene. *Toxicol. Lett.* 20: 343-349.

Rugen, P.J., C.D. Stern, and S.H. Lamm. 1989. Comparative carcinogenicity of the PAHs as a basis for acceptable exposure levels (AELs) in drinking water. *Reg. Toxicol. Pharmacol.* 9: 273-283.

Rummo, J.H., D.K. Routh, N.J. Rummo, and F.J. Brown. 1979. Behvavioral and neurological effects of symptomatic and asymptomatic lead exposure in children. *Arch. Environ. Health* 34: 120-125.

Sabourin, P.J., W.E. Bechtold, L.S. Birnbaum, G. Lucier, and R.F. Henderson. 1988. Differences in the metabolism and disposition of inhaled [^{3}H]benzene by F344/N rats and B6C3F$_1$ mice. *Toxicol. Appl. Pharmacol.* 94: 128-140.

Sabourin, P.J., B.T. Chen, G. Lucier, L.S. Birnbaum, E. Fisher, and R.F. Henderson. 1987. Effect of dose on the absorption and excretion of [^{14}C]benzene administered orally or by inhalation in rats and mice. *Toxicol. Appl. Pharmacol.* 87: 325-336.

Safe, S. 1987. PCBs and human health. In S. Safe, Ed. *Polychlorinated Biphenyls (PCBs): Mammalian and Environmental Toxicology.* Springer-Verlag, Berlin.

Safe, S., L. Safe, and M. Mullin. 1987. Polychlorinated biphenyls: Environmental occurrence and analysis. In S. Safe, Ed. *Polychlorinated Biphenyls (PCBs): Mammalian and Environmental Toxicology.* Springer-Verlag, Berlin.

Sakai, M., D. Yoshida, and S. Mizusaki. 1985. Mutagenicity of polycyclic aromatic hydrocarbons and quinones on *Salmonella typhimurium* TA97. *Mutat. Res.* 156: 61-67.

Salaman, M.H., and F.J.C. Roe. 1956. Further tests for tumour-initiating activity: *N,N*-Di(2-chloroethyl)-*p*-aminophenylbutyric acid (cb1348) as an initiator of skin tumour formation in the mouse. *Br. J. Cancer* 10: 363-378.

Salamone, M.F., J.A. Heddle, and M. Katz. 1979. The mutagenic activity of thirty polycyclic aromatic hydrocarbons (PAH) and oxides in urban airborne particulates. *Environ. Int.* 2: 37-43.

Salamone, M.F. 1981. Toxicity of 41 carcinogens and noncarcinogenic analogs. *Prog. Mutat. Res.* 1: 682-685.

Samitz, M.H., and J. Shrager. 1966. Patch test reactions to hexavalent and trivalent chromium compounds. *Arch. Dermatol.* 94: 304-306.

Samitz, M.H. 1970. Ascorbic acid in the prevention and treatment of toxic effects from chromates. *Acta Dermatovener.* 50: 59-64.

Sanders, V.M., K.L. White, Jr., G.M. Shopp, Jr. and A.E. Munson. 1985. Humoral and cell-mediated immune status of mice exposed to 1,1,2-trichloroethane. *Drug Chem. Toxicol.* 8:357-372.

Sarkar, B. 1984. Nickel metabolism. Pp. 367-384 in F.W. Sunderman, Jr., Ed. *Nickel in the Human Environment.* IARC Scientific Publication No. 53. International Agency for Research on Cancer, Lyon, France.

Schmähl, D. 1955. Examination of the carcinogenic action of naphthalene and anthracene in rats. *Z. Krebsforsch.* 60: 697-710. (in German)

Schmeltz, I., J. Tosk, J. Hilfrich, *et al.* 1978. Bioassays of naphthalene and alkylnaphthalenes for co-carcinogenic activity. Relation to tobacco carcinogenesis. Pp. 47-60 in P.W. Jones, and R.I. Freudenthal, Eds. *Carcinogenesis. Vol 3: Polynuclear Aromatic Hydrocarbons.* Raven Press, New York.

Schnizlein, C.T., A.E. Munson, and R.A. Rhoades. 1987. Immunomodulation of local and systemic immunity after subchronic pulmonary exposure of mice to benzo(a)pyrene. *Int. J. Immunopharmacol.* 9: 99-106.

Schroeder, H.A., and J.J. Balassa. 1967. Arsenic, germanium, tin and vanadium in mice: Effects on growth, survival and tissue levels. *J. Nutrition* 92: 245-252.

Schroeder, H.A., and M. Mitchener. 1971. Toxic effects of trace elements on the reproduction of mice and rats. *Arch. Environ. Health* 23: 102-106.

Schroeder, H.A., and M. Mitchener. 1975a. Life-term studies in rats: Effects of aluminum, barium, beryllium and tungsten. *J. Nutr.* 105:421-427.

Schroeder, H.A., and M. Mitchener. 1975b. Life-term effects of mercury, methyl mercury and nine other trace metals on mice. *J. Nutr.* 105:452-458.

Schumann, A.M., T.R. Fox, and P.G. Watanabe. 1982. Carbon-14-labeled methyl chloroform (1,1,1-trichloroethane): Pharmacokinetics in rats and mice following inhalation exposure. *Toxicol. Appl. Pharmacol.* 62: 390-401.

Scott, J.K., and H.C. Hodge. 1971. Nonabsorbable dusts. In: J.R. DiPalma (ed.). *Drill's Pharmacology in Medicine*, 4th ed. McGraw-Hill, New York.

Scribner, J.D. 1973. Tumor initiation by apparently noncarcinogenic polycyclic aromatic hydrocarbons. *J. Nat. Cancer Inst.* 50: 1717-1719.

Seidel, H.J., E. Barthel, and D. Zinser. 1989. The hematopoietic stem cell compartments in mice during and after long-term inhalation of three doses of benzene. *Exp. Hematol.* 17: 300-303.

Selevan, S.G., P.J. Landrigan, F.B. Stern, and J.H. Jones. 1985. Mortality of lead smelter workers. *Am. J. Epidemiol.* 122:673-683.

Selkirk, J.K., E. Huberman, and C. Heidelverger. 1971. An epoxide is an intermediate in the microsomal metabolism of the chemical carcinogen dibenz[a,h]anthracene. *Biochem. Biophys. Res. Commun.* 43: 1010-1016.

Shear, M.J. 1938. Studies in carcinogenesis. V. Methyl derivatives of 1:2-benzanthracene. *Am. J. Cancer* 33: 499-537.

Shevaleva, G.A. 1978. On the effect of 3,4-benzpyrene on the development of the foetus applied at different stages of gestation. *Gig. Tr. Prof. Zabol.* 7: 54.

Simmon, V.F., K. Kauhanon, and R.G. Tardiff. 1977. Mutagenic activity of chemicals identified in drinking water. Pp. 249-258 in D. Scott *et al.*, Eds. *Progress in Genetic Toxicology.* Elsevier/North Holland Biomedical, Amsterdam.

Simmon, V.F. 1979. *In vitro* mutagenicity assays of chemical carcinogens and related compounds with *Salmonella typhimurium. J. Nat. Cancer Inst.* 62:893-900.

Simmon, V.F., H.S. Rosenkranz, E. Zeiger, and L.A. Poirier. 1979. Mutagenic activity of chemical carcinogens and related compounds in the intraperitoneal host-mediated assay. *J. Natl. Cancer Inst.* 62: 911-918.

Sims, P. 1964. Metabolism of polycyclic compounds. 25. The metabolism of anthracene and some related compounds in rats. *Biochem. J.* 92: 621-631.

Sims, P. 1970. Qualitative and quantitative studies on the metabolism of a series of aromatic hydrocarbons by rat-liver preparations. *Biochem. Pharmacol.* 19: 795-818..

Sina, J.F., C.L. Bean, G.R. Dysart, V.I. Taylor and M.O. Bradley. 1983.Evaluation of the alkaline elution/rat hepatocyte assay as a predictorof carcinogenic/mutagenic potential. Mutat. Res. 113(5): 357-391.

Singh, I. 1983. Induction of reverse mutation and mitotic geneconversion by some metal compounds in Saccharomyces cerevisiae. Mutat.Res. 117(1-2): 149-152.

Sirover, M.A. and L.A. Loeb. 1976. Infidelity of DNA synthesis invitro: Screening for potential metal mutagens or carcinogens. Science.194: 1434-1436.

Slaga, T.J., G.L. Gleason, G. Mills, L. Ewald, P.P. Fu, H.M. Lee, and R.G. Harvey. 1980. Comparison of the skin tumor-initiating activities of dihydrodiols and diol-epoxides of various polycyclic aromatic hydrocarbons. *Cancer Res.* 40: 1981-1984.

Smith, T.J., E.A. Crecelius, and J.C. Reading. 1977. Airborne arsenic exposure and excretion of methylated arsenic compounds. *Environ. Health Perspect.* 19: 89-93.

Smith, B. 1984. PCB Levels in Human Fluids: Sheboygan Case Study. Technical Report No. WIS-SG-83-240). University of Wisconsin, Sea Grant Institute, Madison.

Snell, K.C., and H.L. Stewart. 1962. Pulmonary adenomatosis induced in DBA/2 mice by oral administration of dibenz[a,h]anthracene. *J. Natl. Cancer Inst.* 28: 1043-1049.

Snell, K.C., and H.L. Stewart. 1963. Induction of pulmonary adenomatose in DBA/2 mice by the oral administration of dibenz[a,h]anthracene. *Acta Un. Int. Cancer* 19: 692-694.

Snyder, R., B.D. Goldstein, A. Sellakumar, I. Bromberg, S. Laskin, and R. E. Albert. 1980. The inhalation toxicology of benzene: Incidence of hematopoietic neoplasms and hematotoxicity in ADR/J and C57BL/6J mice. *Toxicol. Appl. Pharmacol.* 54: 323-331.

Snyder, R., S.L. Longacre, C.M. Witmer, J.J. Kocsis, L.S. Andrews, and E.W. Lee. 1981. Biochemical toxicology of benzene. *Rev. Biochem. Toxicol.* 3: 123-153.

Sobel, W., G.G. Bond, C.L. Baldwin, and D.J. Ducommun. 1988. An update of respiratory cancer and occupational exposure to arsenicals. *Am. J. Ind. Med.* 13: 263-270.

Spiegelberg, T., W. Kordel, and D. Hochrainer. 1984. Effects of NiO inhalation on alveolar macrophages and the humoral immune systems of rats. *Ecotoxicol. Environ. Safety* 8: 516-525.

Stanton, M.F., E. Miller, C. Wrench, and R. Blackwell. 1972. Experimental induction of epidermoid carcinoma in the lungs of rats by cigarette smoke condensate. *J. Natl. Cancer Inst.* 49: 867-877.

Stevens, J.T., L.L. Hall, N. Chernoff, J.D. Farmer, W.F. Durham, and L.C. DiPasquale. 1977. Disposition of ^{14}C and/or ^{74}As-cacodylic acid in rats after intravenous, intratracheal or peroral administration. *Environ. Health Perspect.* 19: 151-157.

Stoner, R.D., R.T. Drew, and D.M. Bernstein. 1981. Benzene inhalation effect upon tetanus antitoxin responses and leukemogenesis in mice. Pp. 445-461 in D.D. Mahlum, R.H. Gray, and W.D. Felix, Eds. *Coal Conversion and the Environment.* U.S. Department of Energy, Technical Information Center, Oak Ridge, Tennessee.

Storer, J.S., I. DeLeon, L.E. Millikan, J.L. Laseter, and C. Griffing. 1984. Human absorption of crude coal tar products. *Arch. Dermatol.* 120: 874-877.

Strickland, G.T., W.M. Beckner, and M.L. Leu. 1972. Absorption of copper in homozygotes and heterozygotes for Wilson's Disease and controls: Isotope tracer studies with ^{67}Cu and ^{64}Cu. Clin. Sci. 43:617-625.

Suleiman, S.A. 1987. Petroleum hydrocarbon toxicity in vitro: Effect of n-alkanes, benzene and toluene on pulmonary alveolar macrophages and lysosomal enzymes of the lung. *Arch. Toxicol.* 59: 402-407.

Sunderman, F.W.,Jr., and A. Oskarsson. 1988. Nickel. Pp. 1-19 in E. Merian, Ed. *Metals and Their Compounds in the Environment.* VCH Verlagsgesellschaft, Weinheim.

Sunderman, F.W., Jr., S.M. Hopfer, K.C. Sweeney, A.H. Marcus, B.M. Most, and J. Creason. 1989. Nickel absorption and kinetics in human volunteers. *Proc. Soc. Exp. Biol. Med.* 191: 5-11.

Suzuki, Y., and K. Fukuda. 1990. Reduction of hexavalent chromium by ascorbic acid and glutathione with special reference to the rat lung. *Arch. Toxicol.* 64: 169-176.

Tabacova, S. 1986. Maternal exposure to environmental chemicals. *Neurotoxicology* 7: 421-440.

Takahashi, K., H. Yamauchi, N. Yamato, *et al.* 1988. Methylation of arsenic trioxide in hamsters with liver damage induced by long-term administration of carbon tetrachloride. *Appl. Organomet. Chem.* 2: 309-314.

Takizawa, N. 1940. Carcinogen action of quinones. *Proc. Imp. Acad. (Tokyo)* 16: 309.

Tam, G.K., S.M. Charbonneau, F. Bryce, C. Pomroy, and E. Sandi. 1979. Metabolism of inorganic arsenic (^{74}As) in humans following oral ingestion. *Toxicol. Appl. Pharmacol.* 50: 319-322.

Tatrai, E., G.Y. Ungvary, A. Hudak, K. Rodics, M. Loerincz, and G.Y. Barcza. 1980. Concentration dependence of the embryotoxic effects of benzene inhalation in CFY rats. *J. Hyg. Epidemiol. Microbiol. Immunol.* 24: 363-371.

Taylor, P., J. Stelma, and C. Lawrence. 1989. The relation of polychlorinated biphenyls to birth weight and gestational age in the offspring of occupationally exposed mothers. *Am. J. Epidemiol.* 129: 395-406.

Taylor, P., C. Lawrence, H. Hwang, and A. Paulson. 1984. Polychlorinated biphenyls: Influence on birth weight and gestation. *Am. J. Pub. Health* 74: 1153-1154.

Thilly, W.G., J.G. DeLuca, E.E. Furth, H. Hoppe IV., D.A. Kaden, J.J. Krolewski, H.L. Liber, T.R. Skopek, S.A. Slapikoff, R.J. Tizard, and B.W. Penman. 1980. *Gene-locus mutation assays in diploid human lymphoblast lines.* Pp. 331-364 in F.J. de Serres and A. Hollaender, Eds. *Chemical Mutagens: Principles and Methods for Their Detection. Vol. 6.* Plenum Press, New York.

Thompson, D.J. 1993. A chemical hypothesis for arsenic methylation in mammals. *Chem. Biol. Interact.* 88: 89-114.

Thyssen, J., J.K.G. Althoff, and U. Mohr. 1981. Inhalation studies with benzo[*a*]pyrene in Syrian golden hamsters. *J. Nat. Cancer Inst.* 66: 575-577.

Tong, S.S., M.C. Lowe, M.A. Trush, E.G. Mimnaugh, E. Ginsburg, Y. Hirokata, and T.E. Gram. 1982. Bronchiolar epithelial damage and impairment of pulmonary microsomal monooxygenase activity in mice by naphthalene. *Exp. Mol. Pathol.* 37: 358-369.

Torronen, R., U. Nousiainen, and O. Hanninen. 1981. Induction of aldehyde dehydrogenase by polycyclic aromatic hydrocarbons in rats. *Chem. Biol. Interact.* 36: 33-44.

Travis, C.C., J.L. Quillen, and A.D. Arms. 1990. Pharmacokinetics of benzene. *Toxicol. Appl. Pharmacol.* 102: 400-420.

Tsai, S.P., C.P. Wen, N.S. Weiss, O. Wong, W.A. McClellan, and R.L. Gibson. 1983. Retrospective mortality and medical surveillance studies of workers in benzene areas of refineries. *J. Occup. Med.* 25: 685-692.

Tseng, W.P., H.M. Chu, S.W. How, J.M. Fong, C.S. KLin, and S. Yeh. 1968. Prevalence of skin cancer in an endemic area of chronic arsenicism in Taiwan. *J. Nat. Cancer Inst.* 40: 453-463.

Tseng, W.P. 1977. Effects and dose-response relationships of skin cancer and blackfoot disease with arsenic. *Environ. Health Perspect.* 19: 109-119.

Tsuchiya, K. 1979. *Handbook of Toxicological Methods*, pp. 451-484.

Tsuda, H., and E. Farber. 1980. Resistant hepatocytes as early changes in liver induced by polycyclic aromatic hydrocarbons. *Int. J. Cancer* 25: 137-139.

Tunek, A., T. Olofsson, and M. Berlin. 1981. Toxic effects of benzene and benzene metabolites on granulopoietic stem cells and bone marrow cellularity in mice. *Toxicol. Appl. Pharmacol.* 59: 149-156.

Ungvary, G., and E. Tatrai. 1985. On the embryotoxic effects of benzene and its alkyl derivatives in mice, rats, and rabbits. *Arch. Toxicol.* (Suppl.) 8: 425-430.

Urbanek, R.W. 1980. Side effects of anthracene. *J. Am. Acad. Dermatol.* 2: 240.

USEPA (U.S. Environmental Protection Agency). 1986a. *Air Quality Criteria Document for Lead. Volume IV*, pp. 12-193—12-194. Report No. EPA-600/8-83/028dF. Prepared by USEPA Office of Health and Environmental Assessment, Environmental Criteria and Assessment Office, Research Triangle Park, N.C., for U.S. Environmental Protection Agency, Office of Air Quality Planning and Standards, Research Triangle Park, N.C.

USEPA (U.S. Environmental Protection Agency). 1986b. *Health Assessment Document for Nickel.* Report No. EPA/600/8-83/012FF. U.S. Environmental Protection Agency, Office of Health and Environmental Assessment, Environmental Criteria and Assessment Office, Research Triangle Park, NC.

USEPA (U.S. Environmental Protection Agency). 1986c. Guidelines for carcinogen risk assessment. *Fed. Reg.* 51:33992-34003. (September 24)

USEPA (U.S. Environmental Protection Agency). 1987a. Health and Environmental Effects Profile for Benzo(k)fluoranthene, p. 18. Report No. ECAO-CIN-P229. U.S. Environmental Protection Agency, Cincinnati, Ohio.

USEPA (U.S. Environmental Protection Agency). 1987b. Health and Environmental Effects Profile for Benzo(g,h,i)perylene, p. 24. Report No. 600/X-87/395. U.S. Environmental Protection Agency, Washington, D.C.

USEPA (U.S. Environmental Protection Agency). 1988b. Quantitative Toxicological Evaluation of Ingested Arsenic. Draft. U.S. Environmental Protection Agency, Office of Drinking Water, Washington, D.C.

USEPA (U.S. Environmental Protection Agency). 1988c. 13-Week Mouse Oral Subchronic Toxicity Study [with Fluoranthene]. Conducted by Toxicity Research Laboratories, Ltd., Muskegon, Mich., for U.S. Environmental Protection Agency, Office of Solid Waste, Washington, D.C.

USEPA (U.S. Environmental Protection Agency). 1989a. Risk Assessment Guidance for Superfund, Volume I: Human Health Evaluation Manual (Part A) (Interim Final). Report No. EPA/540/1-89002. U.S. Environmental Protection Agency, Office of Emergency and Remedial Response, Washington, D.C.

USEPA (U.S. Environmental Protection Agency). 1989b. Risk Assessment Guidance for Superfund, Volume II: Environmental Evaluation Manual. Report No. EPA/540/1-89002. U.S. Environmental Protection Agency, Office of Emergency and Remedial Response, Washington, D.C.

USEPA (U.S. Environmental Protection Agency). 1989c. Mouse Oral Subchronic Study with Acenaphthene. Conducted by Hazleton Laboratories, Inc., Vienna, Virginia, for U.S. Environmental Protection Agency, Office of Solid Waste, Washington, D.C.

USEPA (U.S. Environmental Protection Agency). 1989d. Mouse Oral Subchronic Study with Anthracene. Conducted by Hazleton Laboratories, Inc., Vienna, Virginia, for U.S. Environmental Protection Agency, Office of Solid Waste, Washington, D.C.

USEPA (U.S. Environmental Protection Agency). 1989e. 13-Week Mouse Oral Subchronic Toxicity Study [with Fluorene]. Conducted by Toxicity Research Laboratories, Muskegon, Michigan, for U.S. Environmental Protection Agency, Office of Solid Waste, Washington, D.C.

USEPA (U.S. Environmental Protection Agency). 1989f. 13-Week Mouse Oral Subchronic Toxicity Study with Pyrene. TRL Study No. 042-012. Conducted by Toxicity Research Laboratories, Muskegon, MI, for U.S. Environmental Protection Agency, Office of Solid Waste, Washington, DC.

USEPA (U.S. Environmental Protection Agency). 1989g. Review of the National Ambient Air Quality Standards for Lead: Exposure Analysis Methodology and Validation. OAQPS Staff Report. U.S. Environmental Protection Agency, Air Quality Management Division, Office of Air Quality Planning and Standards. June.

USEPA (U.S. Environmental Protection Agency). 1990a. *Exposure Factors Handbook.* Report No. EPA/600/8-89/043. U.S. Environmental Protection Agency, Office of Health and Environmental Assessment, Exposure Assessment Group, Washington, D.C. (March).

USEPA (U.S. Environmental Protection Agency). 1991a. Drinking Water Criteria Document for PAH. U.S. Environmental Protection Agency, Office of Health and Environmental Assessment, Environmental Criteria and Assessment Office, Cincinnati, OH, for the USEPA Office of Water Regulations and Standards, Washington, DC.

Weber, P.M. S. O'Reilly, M. Pollycove, *et al.* 1969. Gastrointestinal absorption of copper: Studies with ^{64}Cu, ^{95}Zn, a whole body counter and the scintillation camera. J. Nucl. Med. 10:591-596.

White, K.L., Jr., V.M. Sanders, V.W. Barnes, G.M. Shopp, Jr. and A.E. Munson. 1985. Toxicology of 1,1,2-trichloroethane in the mouse. *Drug Chem. Toxicol.* 8(5): 333-355.

Yllner, S. 1971. Metabolism of 1,1,2-trichloroethane-1,2-14C in the mouse. *Acta Pharmacol. Toxicol.* 30: 248-256.