N60478.AR.000810
NWS EARLE
5090.3a

Bioslurper Upgrade Work Plan

Naval Weapons Station Earle (NWS Earle)
Colts Neck, New Jersey
N62472-03-D-0802
Task Order 0010

Submitted:

20 May 2005

Prepared For:

U.S. Navy
EFANE
10 Industrial Highway, MS #82
Lester, PA 19113-2090

Prepared By:

ECOR Solutions, Inc.
508 Brandywine Parkway
West Chester, PA 19380

ECOR
Solutions, Inc.

TABLE OF CONTENTS

1.0 INTRODUCTION 1
2.0 PROJECT LOCATION AND DESCRIPTION 1
2.1 Previous Investigations 1
2.2 Geology 2
2.3 Existing Bioslurper System Description 2
3.0 BIOSLURPER UPGRADE SCOPE OF WORK 3
3.1 Task 1 – Project Planning and Management 3
3.1.1 Subtask 1A – Pre-Construction Submittals 3
3.1.2 Subtask 1B – Project Management 4
3.2 Task 2 – Recovery Well Installation 4
3.2.1 Subtask 2A – Well Permits/Dig Permits 4
3.2.2 Subtask 2B – Recovery Well Drilling and Completion 4
3.3 Task 3 – Trenching and Piping Installation 6
3.3.1 Subtask 3A – Dig Permits 6
3.3.2 Subtask 3B – Trenching and Pipe Installation 6
3.3.3 Subtask 3C – Recovery Well Vault Installation and Recovery Well Connection 7
3.3.4 Subtask 3D – Connection to Bioslurper Unit No. 1 8
3.3.5 Subtask 3E – Surveying 8
3.4 Task 4 – Modification of Liquid-Phase Treatment Process 8
3.4.1 Subtask 4A – Removal of Existing Liquid-Phase Treatment Vessels 8
3.4.2 Subtask 4B – Installation of New Liquid-Phase Treatment Vessels 9
3.5 Task 5 – Modification of Vapor-Phase Treatment Process 9
3.5.1 Subtask 5A – Removal of Existing Vapor-Phase Treatment Vessels 9
3.5.2 Subtask 5B – Maintenance and Repair of Shed 9
3.5.3 Subtask 5C – Installation of New Liquid-Phase Treatment Vessels 9
4.0 BIOSLURPER SYSTEM START UP AND OPERATION 10

FIGURES

Figure 1	Site Location Map
Figure 2	Proposed Recovery Wells with Estimated Radii-of-Influence
Figure 3	Proposed Trenching Layout Plan
Figure 4	Trench Cross Sections and Well Details
Figure 5	Piping Details
Figure 6	Bioslurper Unit No. 1 Equipment Layout Plan
Figure 7	Vapor Treatment Shed Layout Plan
Figure 8	Recovery Well Installation Detail

APPENDICES

Appendix A	New Jersey Department of Environmental Protection Well Drilling Permit and List of Required Information for US Navy to Provide
Appendix B	New Jersey Department of Environmental Protection Well Certification As-Built Certification (Form A) and Location Certification (Form B)

1.0 INTRODUCTION

ECOR Solutions, Inc. (ECOR) is contracted by Engineering Field Activity Northeast (EFANE) to prepare a work plan and design for upgrades to the remediation system for Site 16F at Naval Weapons Station (NWS) Earle located in Colts Neck, New Jersey. under Task Order No. 0010 under Contract No. N62472-03-D-0802. The remediation system installated at Site 16F consists of two Bioslurper Units for recovery of light non-aqueous phase liquid (LNAPL), groundwater, and soil vapors impacted by petroleum hydrocarbons. Bioslurper Unit No. 2 was deactivated in November 2004 with the approval of the New Jersey Department of Environmental Protection (NJDEP) due to minimal LNAPL recovery. The upgrade activities are planned to enhance LNAPL recovery at Bioslurper Unit No. 1. These tasks include installation of five additional LNAPL recovery wells, installation of additional sub-grade piping from the additional recovery wells to the existing Bioslurper Unit No. 1, and installation of additional liquid-phase and vapor-phase treatment equipment.

Bioslurping uses one process pipe to remove total fluids (LNAPL, groundwater, and soil vapors) by applying vacuum through a single line. A pressure gradient is induced into a recovery well to enhance movement of LNAPL into the recovery well. The system as Site 16F is operated to minimize the volume of groundwater recovered by adjusting the drop tube in the recovery well as the depth to LNAPL and groundwater fluctuate.

2.0 PROJECT LOCATION AND DESCRIPTION

NWS-Earle is located in east-central Monmouth County in the town of Colts Neck, New Jersey as depicted in **Figure 1**. Site 16F is located in the north-central portion of NWS-Earle. The areas addressed with the bioslurper remediation system at Site 16F are the LNAPL plume southeast of Building C-16, the small LNAPL plume northwest of Building C-50, and a former gas station west of Building C-18.

An underground fuel line located in the area north of Building C-19 was used to transport diesel fuel from an underground storage tank (UST) located at the northeast corner of Building C-18 to a dispensing station north of Building C-50. A leak in the fuel line was discovered in 1977. All of the former USTs were removed from the former gas station in 1998. Part of the former underground diesel transfer line is still in place.

2.1 Previous Investigations

Between June and October of 1995, Brown and Root Environmental conducted a Remedial Investigation (RI) at Site 16F. The RI Report concluded that hydrocarbons detected in the subsurface impacted the groundwater. The groundwater contamination (primarily volatile organics and fuel constituents) is associated with a free-phase LNAPL layer. This floating product is the source of organics in the groundwater.

In 1995, the Navy conducted an investigation at Site 16F using a Site Characterization and Analysis Penetrometer System (SCAPS). SCAPS is a field screening technique,

which detects polynuclear aromatic hydrocarbon (PAH) compounds using a Laser Induced Fluorescence (LIF) system. The LIF is quantitative to a known matrix with a known contaminant. A soil sample collected at the site was used to calibrate the LIF using diesel fuel marine. The fluorescent mapping, obtained from the push samples, was used to gain a better understanding of the contaminant distribution. Twenty nine (29) SCAPS borings were completed in the area between Building C-16 and C-50.

The LNAPL plume to the south and east of Building C-16 is suspected to have been the result of the leaking former underground diesel fuel line. As evidenced by laboratory analytical results of groundwater samples, there is also some residual gasoline contamination associated with the plume near Building C-16.

The LNAPL plume north of Building C-50 is suspected to have been the result of minor spills at a former diesel dispensing station located between the railroad tracks, north of Building C-50.

2.2 Geology

Site 16F is located within the Outer Coastal Plain of the Atlantic Coastal Plain Physiographic Province, approximately nine miles inland from the Atlantic Ocean. The site is relatively flat with most of the topographic relief being the drainage swales located between the railroad tracks. According to regional mapping, the site is located on an outcropping of the Vincentown Formation and upper colluvium. The upper colluvium, where present, is shallow and consists of massive sand and silty sand, which may contain quartz or ironstone pebbles. The Vincentown Formation consists of grey and green gluaconitic, fine to coarse-grained sand with silt.

According to the information obtained from the well installation logs and the SCAPS Investigation, the soil underlying the site is composed of fine to medium grained sand and silty sand.

2.3 Existing Bioslurper System Description

The existing operationing Bioslurper (Unit No. 1) consists of a turnkey shipping container (40 feet ~~long by~~ 8.5 feet high by 8 feet wide) and a 12 foot by 12 foot wooden shed. The shipping container houses the control panel, main electrical service panel, and the extraction equipment, and the liquid-phase treatment equipment and is located on an asphalt pad with a small containment berm. The shed contains the treatment equipment for off-gas (extracted soil vapors) and provides storage space for supplies and materials. The extraction equipment includes a phase separation vessel, a seal water tank, and a liquid ring pump (LRP). The LRP applies vacuum to the recovery well. Recovered fluids are recovered in the phase separator. LNAPL and groundwater are pumped into the oil/water separator. Extracted soil vapors transferred to the LRP and then directed to the vapor-phase treatment shed. LNAPL accumulates above the coalescing packs in the oil water separator and gravity drain to the integral LNAPL storage compartment. LNAPL can be automatically transferred to a separate holding tank inside the shipping

container. Currently, the automatic transfer pump is not active, and LNAPL transfer is completed manually due to the decreased volume of LNAPL recovered over time.

Groundwater is directed to an integral holding sump in the oil/water separator. A transfer pump transfers the recovered groundwater through three to four clay absorbers, plumbed in series, to remove heavier petroleum hydrocarbons and then two liquid-phase granular activated carbon (GAC) vessels, plumbed in series, for additional treatment. The clay absorbers and carbon vessels have a treatment capacity of 15 gallons per minute (gpm) Treated groundwater is discharged to the NWS Earle sanitary sewer.

Recovered soil vapors (LRP off-gas) is processed through a moisture separator and two 200-pound vapor-phase GAC units, plumbed in series. The moisture separator and vapor-phase GAC vessels are located inside the shed.

The system is provided with various interlocked switches and alarm to deactivate the system in the event of an alarm condition (e.g. oil/water separator high high level). The system includes a Programmable Logic Controller (PLC) based panel for remote telemonitoring and control. Since the remediation system air discharge permit limits operation to eight hours per day, the system is routinely activated and deactivated remotely to operate the system on a daily basis. The PLC also provides datalogging of system operations.

3.0 BIOSLURPER UPGRADE SCOPE OF WORK

3.1 Subtask 1 – Project Planning and Management

The tasks listed below include the necessary submittals and preparation to execute the field activities in a timely and safe manner and ensure compliance with design plans.

3.1.1 Subtask 1A – Pre-Construction Submittals

Work Plan
The Work Plan presents ECOR's approach to executing the project, including the site description, statement of work, system information, materials, and other project requirements.

Health and Safety Plan (HASP)
The HASP includes ECOR's approach to providing for the health and safety of its employees and subcontractors during field activities. The HASP shall contain scope-specific procedures (e.g. drilling and excavation) and associated health and safety concerns in addition to basic health and safety information (personal protective equipment) and site specific information (e.g. local emergency contacts).

Equipment Submittals
The equipment submittals shall consist of manufacturer cut-sheets and specifications for equipment and materials to be utilized in the upgrade activities.

Project Schedule
A schedule identifying each phase of the project and relationship between each phase shall be prepared. The project schedule will present a timeline for successful completion of the upgrade activities.

3.1.2 Task 1B – Project Management

The Contractor shall contact appropriate Navy personnel at NWS Earle to obtain contactor identification badges and to notify of proposed work schedule. The Project Manager will also coordinate employees and subcontractors for the project.

3.2 Task 2 - Recovery Well Installation

The following subtasks include the necessary steps to complete installation of the five proposed additional recovery wells. The proposed recovery well locations are depicted on Figure 1.

3.2.1 Subtask 2A – Well Permits/Dig Permits

Prior to drilling activities, the Contractor shall obtain the required well permits from the New Jersey Department of Environmental Protection (NJDEP). A well permit and list of required information from the US Navy are included in **Appendix A**. Monitoring Well Certification Forms (A and B) are attached as **Appendix B**. A New Jersey-licensed driller shall be utilized for recovery well installation.

The Contractor shall mark the proposed drilling areas with white marking paint. NWS Earle Public Works Department shall be contacted to obtain any necessary dig permits. A New Jersey One Call shall also be performed three business days prior to the drilling activities. Drilling activities must be initiated within ten business days, and the New Jersey One Call is valid for 45 days. A New Jersey-licensed well drilling shall be utilized for drilling activities.

3.2.2 Subtask 2B – Recovery Well Drilling and Completion

Proposed recovery wells locations are depicted on **Figure 2**. The recovery wells shall be advanced utilizing an 8-inch hollow stem auger (HSA) to approximately 16 feet below grade surface (bgs). Continuous split spoon samples shall be collected to log the subsurface conditions. A geologist will oversee well installation activities and prepare boring logs and construction diagrams for each of the five recovery wells. Field screening will be performed utilizing a photoionization detector (PID). PID readings will be recorded on the monitoring well logs.

Construction details for the recovery wells are depicted on **Figure 8**. The procedure for installation is detailed below:

1. The depth of the recovery wells shall be approximately 15 feet bgs. The wells will later be converted for total phase extraction (groundwater, LNAPL, and soil vapors). During the past year, depth to water has ranged between 3 and 10 feet bgs. During this conversion, the monitoring well casing will be cut down by approximately three feet, so the bentonite seal depth is critical to maintain well integrity for vacuum extraction of total fluids.
2. Prior to initiating drilling, the borehole shall be hand-cleared to a depth of four feet bgs to determine the presence or absence of subsurface utilities. Utility clearance may be conducted with hand-tools (e.g. hand auger) and/or air knife equipment (soil removal via vacuum).
3. HSA drilling techniques shall be utilized. A nominal 8-inch diameter shall be advanced to install the recovery wells.
4. During drilling operations, a 2-inch OD split barrel sampler shall be driven with blows from a 140-pound hammer falling 30-inches in accordance with ASTM D1586-84, Standard Penetration Test.
5. During recovery well installation, two soil samples shall be collected from each borehole. One sample shall be collected from the interval indicating the highest PID reading, and one sample shall be collected from the groundwater interface. If the highest PID reading observed corresponds with the groundwater interface, then only one sample shall be collected.
6. Soil samples shall be collected for analysis of diesel parameters (total petroleum hydrocarbons [TPH]) and gasoline parameters (volatiles + 10 and lead). Encore® samplers shall be utilized for volatile sample collection.
7. Ten feet of 4-inch diameter PVC well screen with 0.01-inch slot size shall be set at the bottom of the borehole with riser pipe to the surface.
8. The annular space shall be backfilled from the bottom of the well to 6-inches above the screen with clean, medium-grained sand (Morie #1). A 2-foot (minimum) bentonite seal shall be installed above the sand and properly hydrated. The remaining annular space shall be backfilled with bentonite-cement grout.
9. A steel manhole shall be placed around the well to protect the well prior to installation of the recovery well vault and sump. The manholes shall be 8-inch diameter with watertight lids and 12-inch skirts.
10. Soil cuttings shall be containerized in 55-gallon drums and properly labeled for subsequent disposal. Soil samples shall be collected for the necessary soil disposal parameters (facility dependent, but at a minimum will include TPH and TCLP).
11. Drilling equipment shall be decontaminated prior to use and after each borehole is completed in accordance with the NJDEP Field Sampling Procedures Manual (May 1992). Decontamination shall include the use of designed decontamination area, cleaning of equipment with a steam cleaner, and collection of decontamination fluids. Decontamination fluids will be transferred to Bioslurper Unit No. 1 for treatment.

12. Equipment blanks shall be collected as required by the NJDEP Field Sampling Procedures Manual at a rate of 10% (minimum one per day). The equipment blank will consist of collecting a sample of laboratory grade deionized water rinsate from the decontaminated split spoon in the field. Equipment blanks shall be analyzed for volatile compounds only.

It should be noted that the asphalt parking area adjacent to Bioslurper Unit No. is reportedly underlain by concrete (thickness not confirmed). The southernmost two recovery wells are proposed for installation in this area.

3.3 Task 3 – Trenching and Piping Installation

The following subtasks include the necessary steps to complete subgrade trenching activities and connection of the five proposed additional recovery wells to the existing Bioslurper (Unit No. 1). The proposed trenching plan is included as **Figure 3** and piping details are depicted on **Figures 4** and **5**.

3.3.1 Subtask 3A – Dig Permits

Prior to excavation activities, the Contractor shall mark the excavation areas with white marking paint. NWS Earle Public Works Department shall be contacted to obtain any necessary dig permits. A New Jersey One Call shall also be performed three business days prior to the drilling activities. Trenching activities must be initiated within ten business days, and the New Jersey One Call is valid for 45 days.

Subsurface utilities shall be located prior to excavation activities. A magnetic scan or similar shall be performed to locate potential subgrade utilities. A visual inspection shall also be utilized to identify potential subgrade utilities and to locate overhead utilities. The Contractor shall hand-dig in areas where subgrade utilities have been identified to confirm the presence of the subgrade line and identify depth.

3.3.2 Subtask 3B – Trenching and Pipe Installation

The Contractor shall perform lay-out work of proposed trench locations (**Figure 3**). All dimensions shall be field verified. Trench locations may be altered due to the presence of underground or overhead utilities or obstructions.

Excavation will be conducted in grass areas and in asphalt areas. The asphalt area adjacent to Bioslurper Unit No. 1 is reportedly underlain by concrete (exact thickness not confirmed). The southernmost two additional recovery wells are located in this area.

Soil shall be excavated to a depth of approximately 30 inches bgs for installation of the subsurface piping. Since relatively uniform sandy soil is present, no bedding material is necessary below the piping. Excavated soils shall be backfilled into the trench in 12-inch maximum lifts. Backfill shall be compacted with vibratory plate tamper or equal. Metallic tape shall be installed above the length of the piping for future pipe location.

Existing piping associated with the Bioslurper system will be encountered and care should be taken to avoid damage to existing infrastructure. If any existing remediation piping is damaged, the Project Manager shall be notified, and the piping shall be repaired.

The Contractor shall assume that any excavated soil from the trenches can be spread in a grass area at the site. It is anticipated that almost all of the excavated soil will be utilized as backfill in the trenches.

Piping runs in asphalt/concrete shall require saw-cutting through asphalt and concrete. The asphalt is reportedly 4 to 6 inches in thickness. The concrete thickness is not confirmed. It is estimated to be 6 to 8 inches thick with rebar. Excavated asphalt and concrete shall be loaded into covered roll-off container(s) for off-site disposal. The asphalt shall be replaced as indicated on **Figure 4**. Asphalt seams shall be tar-sealed.

The subgrade piping consists of 2-inch Schedule 40 PVC sleeved inside of 4-inch Schedule 40 PVC. The 4-inch PVC provides secondary containment of the main 2-inch PVC total fluids recovery pipe. Piping centralizers shall be installed approximately every 20 feet (detail show on **Figure 5**). The outer piping must be increased to 6-inch diameter PVC at all fittings (90 degree elbows and tee fittings) to permit installation of the 2-inch diameter process pipe. Piping details for fittings are shown on **Figure 5**.

No piping will be installed beneath the railroad tracks. The pipe runs shall be connected below grade and stubbed up next to Bioslurper Unit No. 1 near the railroad tracks with the existing piping stub ups. Heat trace shall be installed around the 2-inch PVC pipe and inside the 4-inch secondary containment pipe to a minimum depth of 18 inches below grade as indicated on **Figure 5**.

An access port to the secondary containment piping shall be installed adjacent to Bioslurper Unit No. 1 prior to the stub up. The access port will consist of 4-inch PVC riser pipe with a 4" threaded plug. The detail is shown on **Figure 5**.

All piping (2-inch process pipe and 4-inch secondary containment pipe) shall be pneumatically pressure tested. Pressure testing shall consist of a 30-minute test at 10 pounds per square inch (psi). Any lines that fail pressure testing must be repaired.

3.3.3 Subtask 3C – Recovery Vault Installation and Recovery Well Connection

The Contractor shall install sumps for secondary containment around each recovery well with an overlying manhole for access via the surface. Vault details are shown on **Figure 4**. The sump shall be installed over the recovery well with a rubber connector to maintain containment. The piping shall enter through the side wall and shall also be fitted with a rubber connector. The 4-inch secondary containment piping shall be terminated inside each sump. The sumps shall be provided with a snap-on watertight lid. A 36-inch diameter manhole with a 12-inch skirt shall be installed over each sump to permit access from the surface. The access manhole shall be non-metallic and load rated (H20).

Inside the recovery sump, a true union ball valve shall be installed on each 2-inch total fluid recovery line. The PVC shall be transitioned to 1-inch 100-psi rated poly piping. A 4-inch sanitary well seal shall be installed on each recovery well. The sanitary seal shall contain access ports for the 1-inch poly total fluids recovery line (drop tube), a gauging port, and a sample port for vacuum gauging with a hand-held gauge. A check valve shall be installed at the bottom of the drop tube.

3.3.4 Subtask 3D – Connection to Bioslurper Unit No. 1

The Contractor shall complete connection of the piping for the additional recovery wells to the existing Bioslurper Unit No. 1. The pipe shall be stubbed up adjacent to the shipping container and enter the shipping container in the vicinity of the existing piping. The additional total fluids recovery line shall be connected to the existing influent line prior to the phase separator. Valves shall be installed to permit recovery from either or both total fluid recovery lines. The piping stub up is depicted on **Figure 5**.

3.3.5 Subtask 3E – Surveying

A certified surveyor shall survey all new recovery wells and utility piping locations utilizing the New Jersey State Plane Coordinate System. Vertical elevations, latitude, and longitude shall be obtained for the additional recovery wells from the top of the PVC casing (after modification for total fluids extraction). A Monitoring Well Certification Form B is included in **Appendix B**. This form shall be completed by the surveyor.

3.4 Task 4 – Modification of Liquid-Phase Treatment Process

3.4.1 Subtask 4A – Removal of Existing Liquid-Phase Treatment Vessels

Bioslurper Unit No. 1 currently houses four clay absorbers and two liquid-phase granular activated carbon (LGAC) vessels. The clay absorbers are fiberglass and contain approximately 300 pounds of clay/anthracite media each for removal of dissolved-phase hydrocarbons (typically heavier compounds associated with diesel fuel). The LGACs have a capacity of approximately 200 pounds of activated carbon each for polishing and removal of lighter-end hydrocarbons. The LGACs are housed in a metal rack to prevent shifting during transport of the shipping container.

The media shall be removed from the vessels and either transported off-site at that time or drummed for subsequent removal. The clay/anthracite media shall be segregated from the carbon. The media shall be removed via vacuum techniques. The vessels shall be removed from Bioslurper Unit No. 1. Vessels in usable condition shall be stored in Bioslurper Unit No. 2 (inactive) for potential future use. Damaged vessels will be disposed of as needed.

3.4.2 Subtask 4B – Installation of New Liquid-Phase Treatment Vessels

Two vessels for clay/anthracite media and two vessels for carbon will be installed in place of the existing six vessels. The vessels shall be carbon steel with a capacity of approximately 500-pounds of media each. The vessels shall be rated for 25 gpm and be rated for an operating pressure of 75 psi. The layout of the vessels is shown on **Figure 6**. Each vessel is 30-inches in diameter and include a manway access on the top of the vessel.

The liquid-phase treatment vessels shall be plumbed in series (two carbon absorbers followed by two LGACs). The units shall be interconnected with flexible piping to allow for backwashing of the vessels. A maximum indicating pressure gauge and sample port shall be installed on the influent of each vessel.

Once in place, the vessels shall be bedded with the media (clay/anthracite and GAC). Prior to use, the vessels shall be hydrated for at least 24 hours. The vessels will then be backwashed to remove any fines from the diffusers and piping prior to activation of the system.

3.5 Task 5 – Mofication of Vapor-Phase Treatment Vessel

3.5.1 Subtask 5A – Removal of Existing Vapor-Phase Treatment Vessels

The vapor-phase treatment shed contains a moisture separator and two vapor-phase granular activated carbon vessels (VGACs). The VGACs contain approximately 200-pounds of activated carbon and provide treatment for recovered soil vapors from Bioslurper Unit No. 1. On average, one vessel per week is removed from service, and a new VGAC is installed in line (two in line at all times during operation). Vessels installed in the shed shall be removed and labeled for subsequent regeneration by a carbon vendor.

3.5.2 Subtask 5B – Maintenance and Repair of Shed

The vapor-phase treatment shed is a 12 foot by 12 foot wooden shed with double doors on opposite sides of the shed. The shed is in need of minor repairs and maintenance prior to installation of the new VGACs. These activities will include patching the hole in the roof (currently sealed with a temporary patch), removal of old and damaged insulation, installation of new installation material, door/hinge reinforcement, and exterior painting. The shed does not have a permanent heater installed. Since the shed is not utilized for processing water, a permanent heater is not necessary.

3.5.3 Subtask 5C – Installation of New Vapor-Phase Treatment Vessels

Two 500-pound VGACs shall be installed in place of the 200-pound units. This will minimize the frequency of carbon vessel replacement and provide additional treatment capacity of soil vapors. When new recovery wells are utilized for total fluids extraction,

the initial concentration of hydrocarbons in the groundwater and soil vapors is typically higher than that observed after a short period of continuous operation.

The layout of the vapor-treatment shed is depicted on **Figure 7**. A third vessel will also be located in the shed for ease of changing vessels when the primary VGAC media is spent. One effluent stack shall exit the roof of the shed as in the current configuration. Sample ports shall be provided on the influent of each vessel to allow collection of air velocities and readings of hydrocarbons with a PID. Vessels will be connected with flexible fittings to facilitate change-out and repositioning.

4.0 BIOSLURPER SYSTEM START UP AND OPERATION

Start-up activities and operation of Bioslurper Unit No. 1 shall be conducted in accordance with the Operation and Maintenance Manual (Foster Wheeler, February 2000) and the updated Operation and Maintenance Manual (Foster Wheeler, February 2004). The proposed additional recovery wells and modifications of the liquid- and vapor-phase treatment equipment do not affect the written procedures for system start up and operation.

An appendix will be added to the Operation and Maintenance Manual to reflect the changes. The appendix will include a description of the treatment chain and appropriate equipment cut sheets.

FIGURES

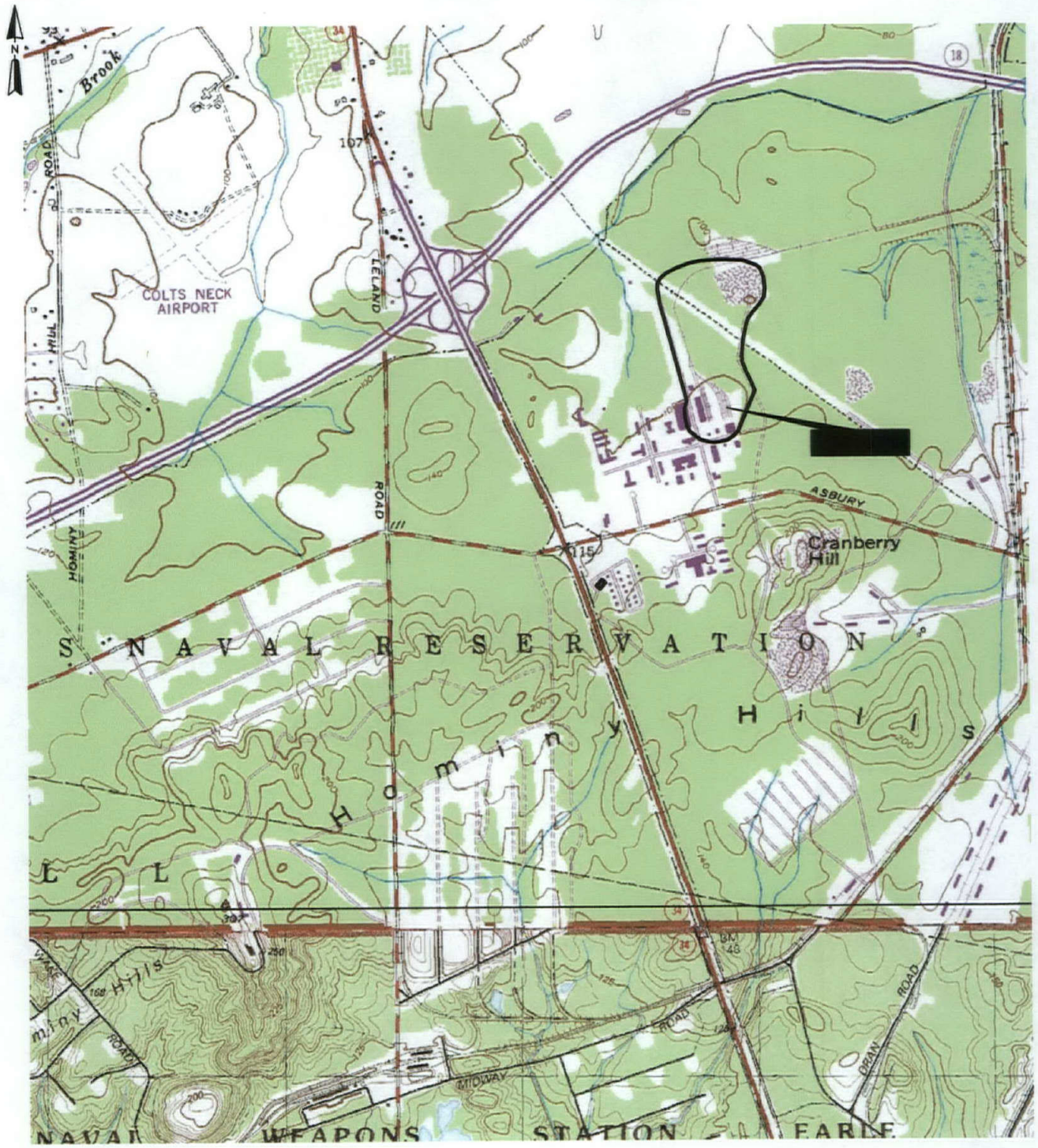

SOURCE: USGS SANDY HOOK, NJ

SITE LOCATION MAP		
U.S. NAVY NWS EARLE COLTS NECK, NJ		
ECOR Solutions 508 Brandywine Parkway, West Chester, PA 19380		
SCALE IN FEET 0 2000	DATE 05-06-05	FIGURE 1

ECOR Solutions, Inc.

C:\Documents and Settings\All Users\Documents\CADD\ECOR\NWS Earle\Colts Neck\Desgnt_TM SLM.dwg

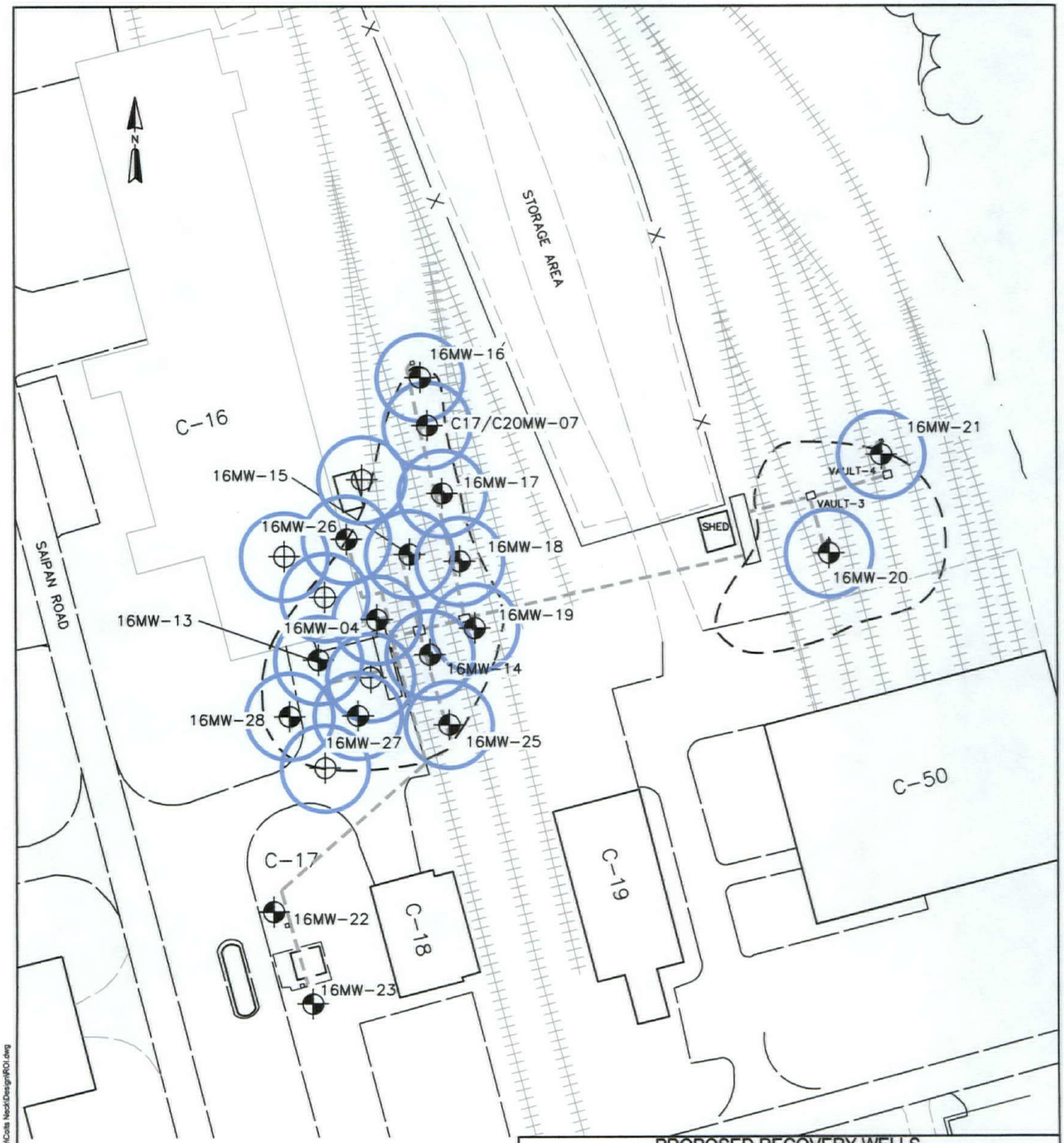

LEGEND

MONITORING WELL

PROPOSED RECOVERY WELL

ESTIMATED RADIUS-OF-INFLUENCE

LNAPL PLUME BOUNDARY BASED ON FORMER SCAPS STUDY

SOURCE: TETRATECH FOSTER WHEELER

PROPOSED RECOVERY WELLS
WITH ESTIMATED RADII-OF-INFLUENCE

U.S. NAVY
NWS EARLE
COLTS NECK, NJ

ECOR Solutions
508 Brandywine Parkway, West Chester, PA 19380

SCALE IN FEET	DATE	FIGURE
0 — 80	05-06-05	2

C:\Documents and Settings\All Users\Documents\CAD\ECOR\NWS Earle\Colts Neck\Design\ROI.dwg

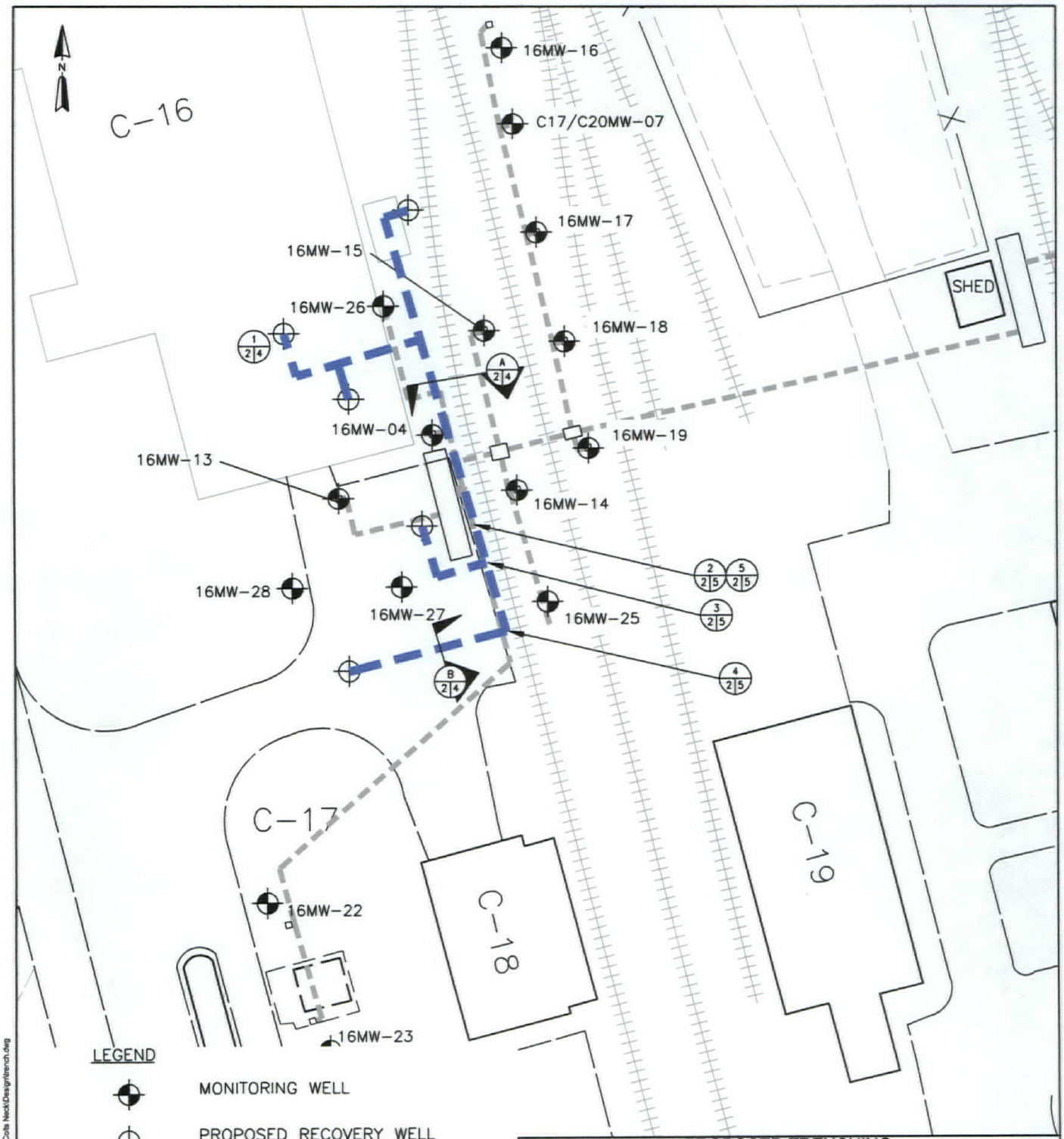

LEGEND

- MONITORING WELL
- PROPOSED RECOVERY WELL
- EXISTING TRENCH
- PROPOSED TRENCH LOCATION
- SECTION ID
- PAGE NO. WHERE SHOWN
- PAGE NO. WHERE CALLED OUT

SOURCE: TETRATECH FOSTER WHEELER

PROPOSED TRENCHING LAYOUT PLAN

U.S. NAVY
NWS EARLE
COLTS NECK, NJ

ECOR Solutions
508 Brandywine Parkway, West Chester, PA 19380

SCALE IN FEET	DATE	FIGURE
0 — 50	05-06-05	3

C:\Documents and Settings\All Users\Documents\CADD\ECOR\NWS Earle\Colts Neck\Design\trench.dwg

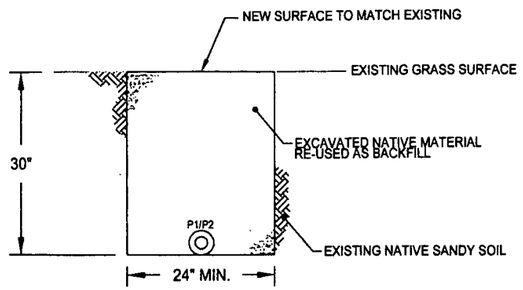

SECTION A 2|4

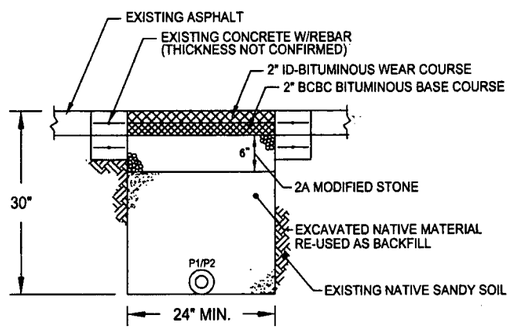

SECTION B 2|4

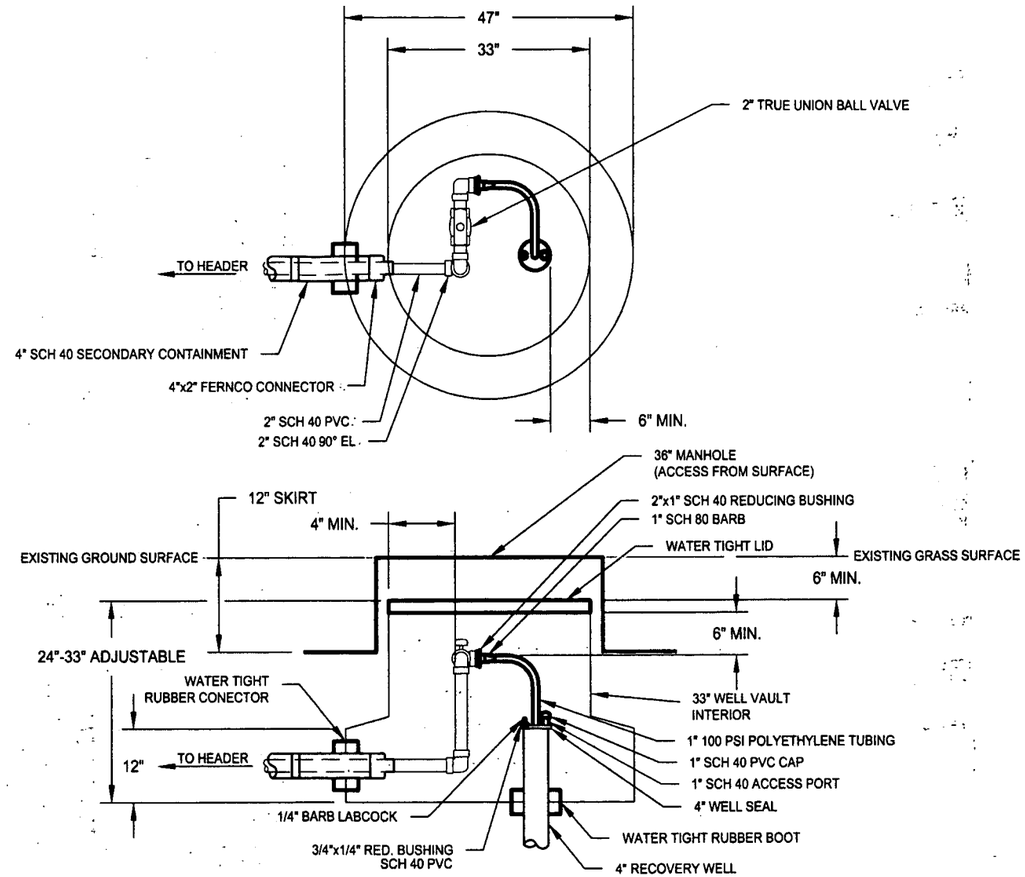

TYPICAL TOTAL PHASE EXTRACTION WELL CONSTRUCTION DETAIL 1 2|4

P1 = 2" SCH 40 PVC
GROUNDWATER/LNAPL/ SOIL VAPOR RECOVERY LINE

P2 = 4" SCH 40 PVC
SECONDARY CONTAINMENT PIPE

TRENCH CROSS SECTIONS AND WELL DETAILS			
U.S. NAVY NWS EARLE COLTS NECK, NJ			
ECOR Solutions 508 Brandywine Parkway, West Chester, PA 19380			
SCALE IN FEET 0 2'	DATE 05-06-05	FIGURE 4	ECOR Solutions, inc.

C:\Documents and Settings\All Users\Documents\CADDECOR\NWS Earle\Colts Neck\Design\TRENCH SECTIONS.dwg

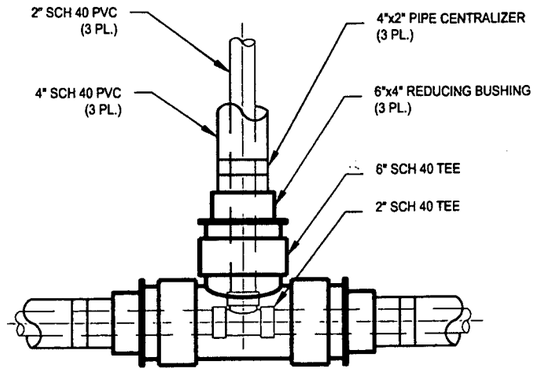

TOP VIEW

NOTE:
4" & 6" SCH 40 PVC IS UTILIZED FOR SECONDARY CONTAINMENT OF THE PRIMARY 2" SCH 40 PVC GROUNDWATER/LNAPL/SOIL VAPOR RECOVERY LINE.

SUBGRADE PIPING DETAIL FOR TEE CONNECTION (3 / 2|5)

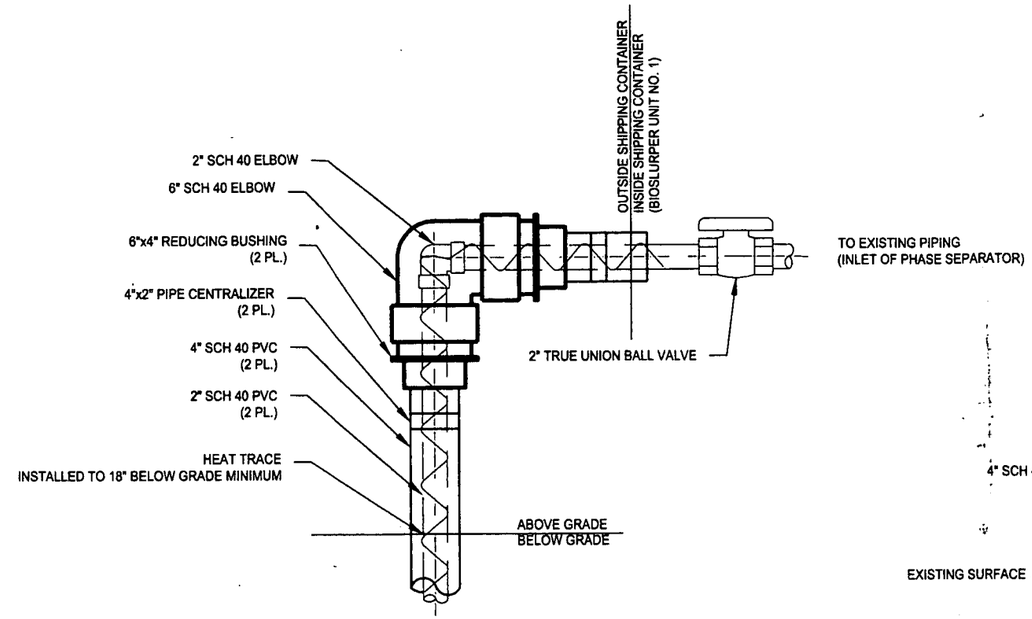

NOTE:
4" & 6" SCH 40 PVC IS UTILIZED FOR SECONDARY CONTAINMENT OF THE PRIMARY 2" SCH 40 PVC GROUNDWATER/LNAPL/SOIL VAPOR RECOVERY LINE.

PIPE STUB UP & CONNECTION TO EXISTING BIOSLURPER UNIT NO. 1 (2 / 2|5)

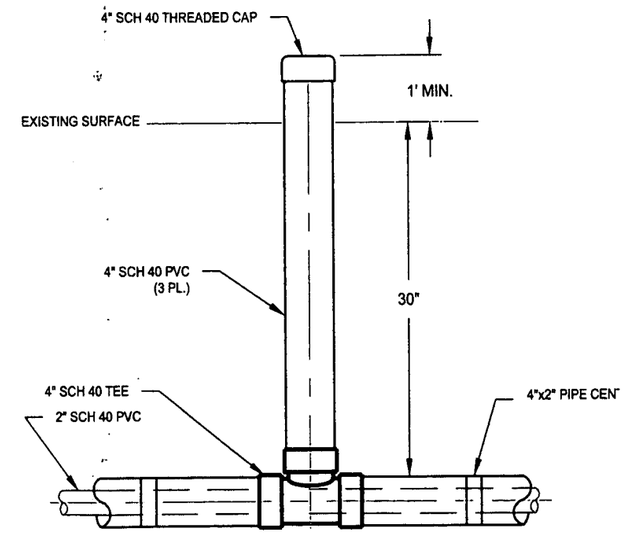

ACCESS PORT FOR SECONDARY CONTAINMENT (5 / 2|5)

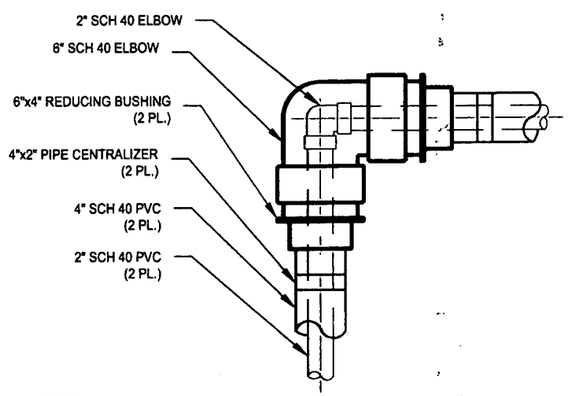

NOTE:
4" & 6" SCH 40 PVC IS UTILIZED FOR SECONDARY CONTAINMENT OF THE PRIMARY 2" SCH 40 PVC GROUNDWATER/LNAPL/SOIL VAPOR RECOVERY LINE.

SUBGRADE PIPING DETAIL FOR 90° ELBOW CONNECTION (4 / 2|5)

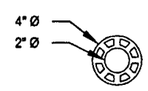

PLAN VIEW

PIPE CENTRALIZER DETAIL

PIPING DETAILS

U.S. NAVY
NWS EARLE
COLTS NECK, NJ

ECOR Solutions
508 Brandywine Parkway, West Chester, PA 19380

SCALE IN FEET	DATE	FIGURE
0 — 12"	05-06-05	5

C:\Documents and Settings\All Users\Documents\CADD\ECOR\NWS Earle\Cells Hack\Design\TRENCH SECTIONS.dwg

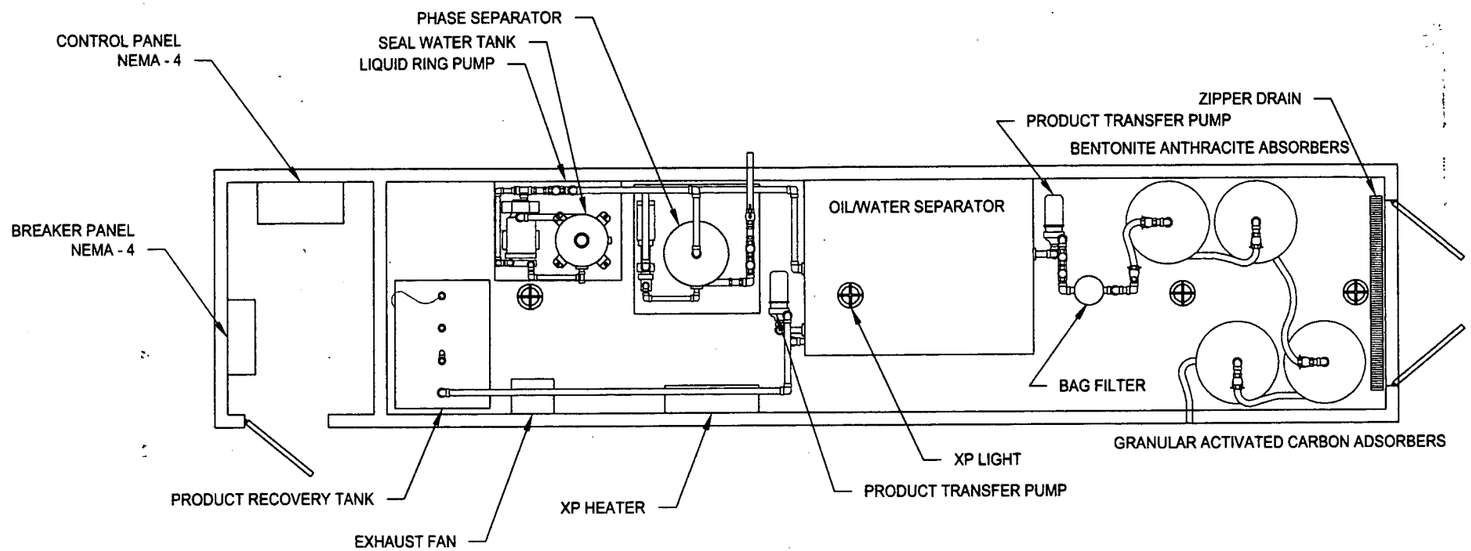

BIOSLURPER UNIT No.1 EQUIPMENT
LAYOUT PLAN

U.S. NAVY
NWS- EARLE
COLTS NECK, NJ

ECOR Solutions
508 Brandywine Parkway, West Chester, PA 19380

SCALE IN FEET	DATE	FIGURE
0 — 4	05-06-05	6

ECOR Solutions, Inc.

C:\Documents and Settings\All Users\Documents\CADD\ECOR\NWS Earle\Colts Neck\Design\BIOSLURPER UNIT.dwg

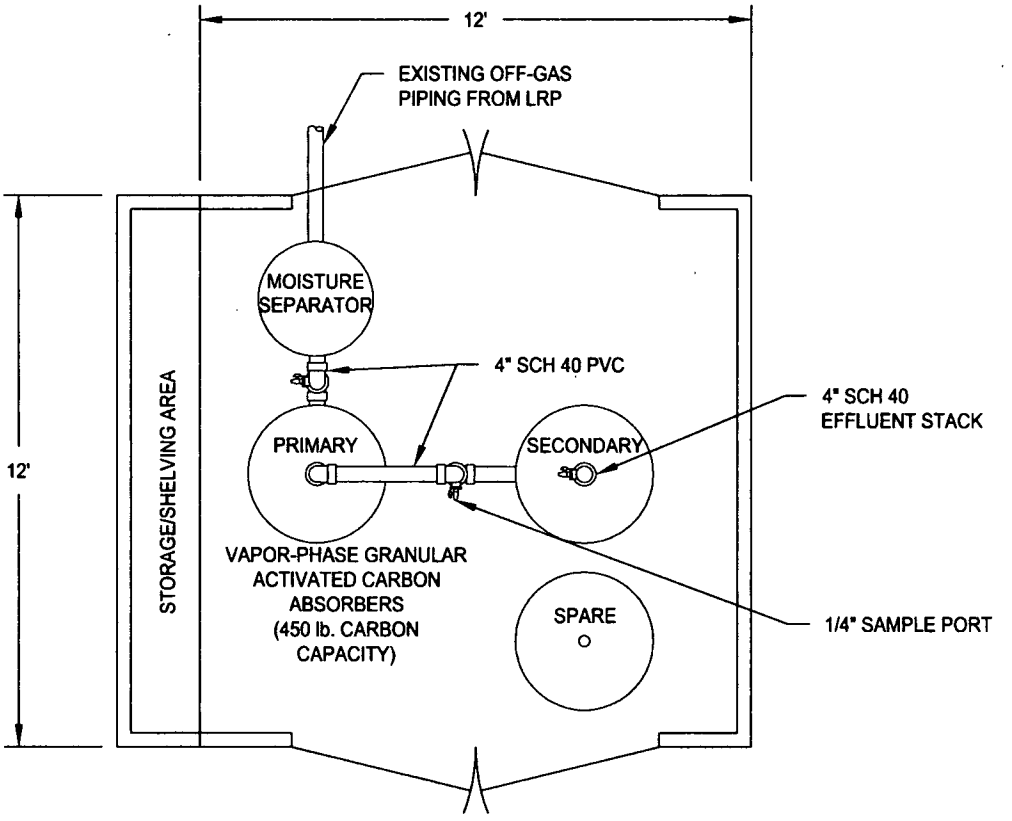

VAPOR TREATMENT SHED LAYOUT PLAN		
U.S. NAVY NWS- EARLE COLTS NECK, NJ		
ECOR Solutions 508 Brandywine Parkway, West Chester, PA 19380		
SCALE IN FEET 0 4	DATE 05-06-05	FIGURE 7

ECOR Solutions, Inc.

C:\Documents and Settings\All Users\Documents\CADD\ECOR\NWS Earle\Colts Neck\Design\BIO\SLURPER UNIT.dwg

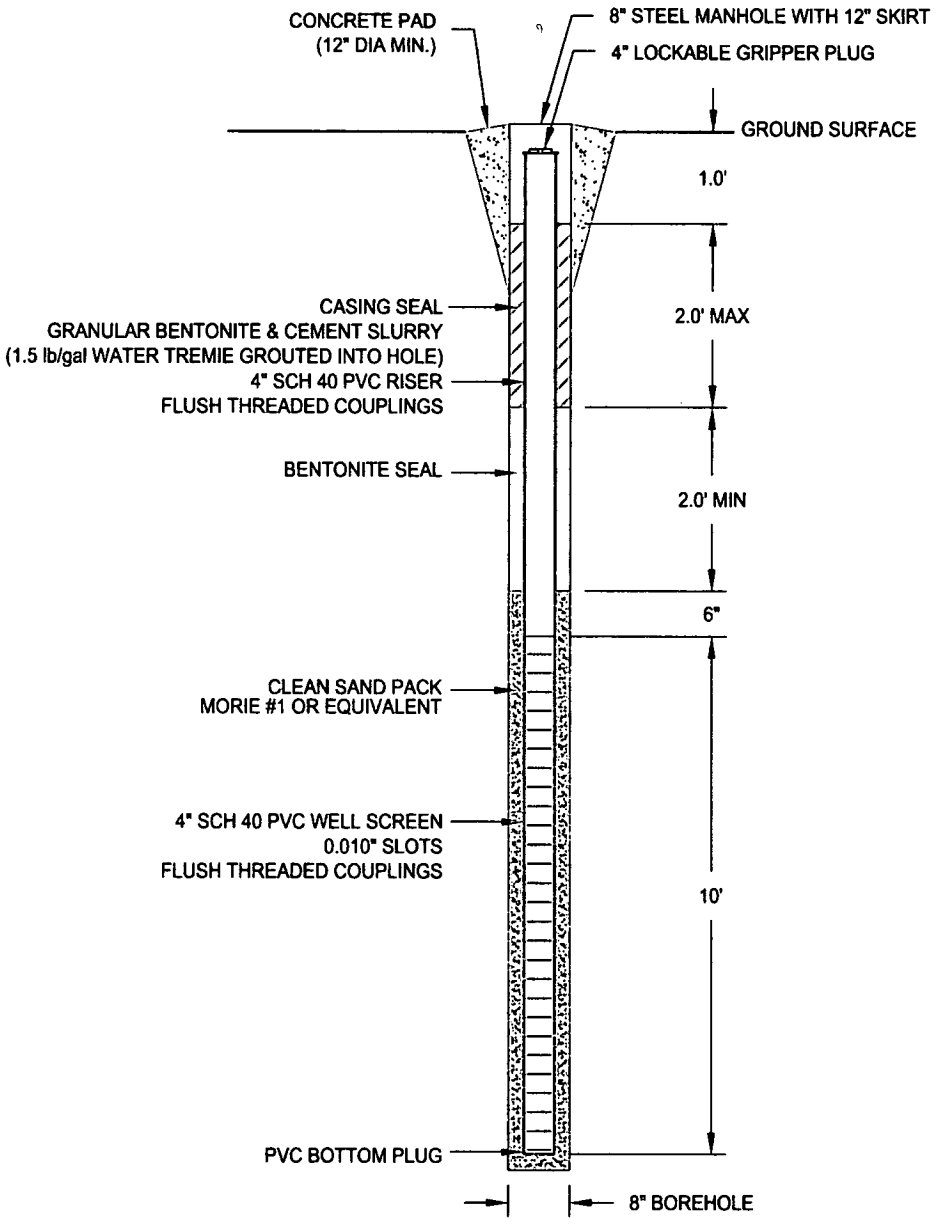

RECOVERY WELL INSTALLATION DETAIL		
U.S. NAVY NWS EARLE COLTS NECK, NJ		
ECOR Solutions 508 Brandywine Parkway, West Chester, PA 19380		
SCALE IN FEET 0 2'	DATE 05-06-05	FIGURE 8

ECOR Solutions, Inc.

C:\Documents and Settings\All Users\Documents\CADD\ECOR\NWS Earle\Colts Neck\Design\well.dwg

APPENDIX A
New Jersey Department of Environmental Protection
Well Drilling Permit and
List of Required Information for US Navy to Provide

NEW JERSEY STATE WELL DRILLING PERMITS

The following information is required for all New Jersey State well permits

1. Name and address of the owner of the property.
2. Name and address of the property where the wells are to be installed.
3. Tax lot and block numbers of the property where the wells are to be installed.
4. Distances of each well to two perpendicular streets.
5. Identification of each well. (i.e. MW-1)
6. Name and telephone number of a contact with the owner.
7. Regulatory agency or bureau involved and the official case I.D. number, if applicable. (list below)

   Spill Fund Case
   ECRA Case
   CERCLA (Superfund) Site
   RCRA Site
   Underground Storage Tank
   NJPDES Municipal Discharge Permit
   NJDPES Industrial Discharge Permit
   Div. of Hazardous Waste Management Enforcement Case
   Div. of Water Resources Enforcement Case
   Aquifer Test Observation Well
   Other (Explain)

All of this information is required by the state before they will issue permits. Turnaround time for processing,mailing, and receiving approved permits is approximately three weeks . Any information missing from the application is cause for rejection by the State and , additionally, delays the permitting process.

SERIAL # 53352

DWR-133M (8/95)

Mail to
NJDEP
Bureau Water Allocation
CN 426
Trenton, NJ 08625-0426

STATE OF NEW JERSEY
DEPARTMENT OF ENVIRONMENTAL PROTECTION
TRENTON, NJ

MONITORING WELL PERMIT

VALID ONLY AFTER APPROVAL BY THE D.E.P.

Permit No. _____

COORD # : . .

Owner _____ Driller _____

Address _____ Address _____

Name of Facility _____

Address _____

Diameter of Well(s) *Inches*	Proposed Depth of Well(s) F
# of Wells Applied for (max. 10)	Will pumping equipment be installed? YES ☐ NO ☐
Type of Well (see reverse)	If Yes, give pump capacity *cumulative Gl*

LOCATION OF WELL(S)

Lot #	Block #	Municipality	County

State Atlas Map No. _____

Draw sketch of well(s) nearest roads, buildings, etc. with marked distances in feet. Each well MUST be labeled with a name and/or number on the sketch.

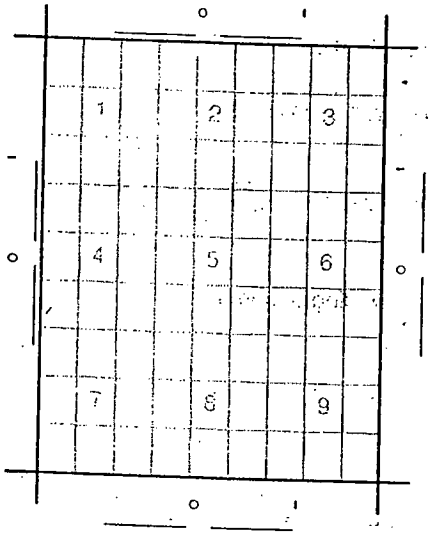

N↑

FOR MONITORING WELLS, RECOVERY WELLS, OR PIEZOMETERS, THE FOLLOWING MUST BE COMPLETED BY THE APPLICANT. PLEASE INDICATE WHY THE WELLS ARE BEING INSTALLED:

- ☐ Spill Site
- ☐ ISRA Site
- ☐ CERCLA (Superfund) Site
- ☐ RCRA Site
- ☐ Underground Storage Tank Site
- ☐ Operational Ground Water Permit Site
- ☐ Pretreatment and Residuals Site
- ☐ Water and Hazardous Waste Enforcement Case
- ☐ Water Supply Aquifer Test Observation Well
- ☐ Other (explain) _____

CASE I.D. Number _____

This Space for Approval Stamp

FOR D.E.P. USE

- ☐ Issuance of this permit is subject to the conditions attached. (see next page)
- ☐ For monitoring purposes only
- ☐ _____
- ☐ The well(s) may not be completed with more than 25 feet of total screen or uncased borehole.

SEE REVERSE SIDE FOR IMPORTANT PROVISIONS AND REGULATIONS PERTAINING TO THIS PERMIT.

In compliance with N.J.S.A. 58:4A-14, application is made for a permit to drill a well as described above.

Date _____ Signature of Driller _____ Registration No. _____

Signature of Owner _____

COPIES: Water Allocation White

APPENDIX B
New Jersey Department of Environmental Protection
Monitoring Well Certification Forms
Form A – As-Built Certification
Form B – Location Certification

MONITORING WELL CERTIFICATION - FORM A - AS-BUILT CERTIFICATION

Name of Owner: _____

Name of Facility: _____

Location: _____

UST Registration No.: _____ BUST case No.: _____ - _____ - _____ - _____

CERTIFICATION

Well Permit Number: __ __ - __ __ __ __ __ - __ Owner's Well Number _____

Well Completion Date: _____ Lithologic Log: Attach

Distance from Top of Casing (cap off) to ground surface (one-hundredth of a foot): _____

Total Depth of Well to the nearest 1/2 foot: _____

Depth to Top of Screen (or Top of Open Hole) From Top of Casing (one-hundredth of a foot): _____

Screen Length (or length of open hole) in feet: _____

Screen or Slot Size: _____

Screen or Slot Material: _____

Casing Material: (PVC, Steel or Other-Specify): _____

Casing Diameter (inches): _____

Static Water Level From Top of Casing at the Time of Installation (one-hundredth of a foot): _____

Yield (gallons per minute): _____

Development Technique (specify): _____

Length of Time Well is Developed/Pumped or Bailed: Hours Minutes

Authentication

I certify under penalty of law that I have personally examined and am familiar with the information submitted in this document and all attachments and that, based on my inquiry of those individuals immediately responsible for obtaining the information, I believe the submitted information is true, accurate and complete. I am aware that there are significant penalties for submitting false information, including the possibility of fine and imprisonment.

Technical Certification:

_____ _____

Name (Type or Print) Signature

_____ Seal

Certification or License No.

Certification by Executive Officer or Duly Authorized Representative:

_____ _____ _____

Name (Type or Print) Signature Date

Title: _____

SIGNATORY REQUIREMENTS

The form entitled "Monitoring Well Certification - Form A - As- Built Construction Certification", must be signed by one of the following: a New Jersey licensed Professional Engineer; a licensed New Jersey Well Driller; a geologist certified by any State; a geologist certified by the American Institute of Professional Geologists; an individual certified by the American Institute of Hydrology; any other person approved by the Department.

Form B, "Location Certification", must be signed and sealed by a Licensed New Jersey Land Surveyor.

MONITORING WELL CERTIFICATION FORM B - LOCATION CERTIFICATION

Name of Owner: _____

Name of Facility: _____

Location: _____

Case Number(s): _____ (UST #, ISRA #, Incident #, or EPA #)

LAND SURVEYOR'S CERTIFICATION

Well Permit Number: __ __ - __ __ __ __ __ - __
(This number must be permanently affixed to the well casing.)

Owners Well Number (As shown on application or plans): _____

Geographic Coordinate NAD 83 (to nearest 1/10 of second):

Longitude: West _____ Latitude: North _____

New Jersey State Plane Coordinates NAD 83 to nearest 10 feet:

North _____ East _____

Elevation of Top of Inner Casing (cap off) at reference mark (nearest 0.01'): _____

Source of elevation datum (benchmark, number/description and elevation/datum. If an on-site datum is used, identify here, assume datum of 100', and give approximated actual elevation.)

_____

Significant observations and notes: _____

_____

AUTHENTICATION

I certify under penalty of law that I have personally examined and am familiar with the information submitted in this document and all attachments and that, based on my inquiry of those individuals immediately responsible for obtaining the information, I believe the submitted information is true, accurate and complete. I am aware that there are significant penalties for submitting false information including the possibility of fine and imprisonment.

SEAL

_____ _____
PROFESSIONAL LAND SURVEYOR'S SIGNATURE DATE

_____
PROFESSIONAL LAND SURVEYOR'S NAME AND LICENSE NUMBER
(Please print or type)

_____

PROFESSIONAL LAND SURVEYOR'S ADDRESS AND PHONE NUMBER