N91192.AR.000253
NIROP FRIDLEY
5090.3a

United Defense L.P., FMC/BMY

REPORT

Documentation Report

Former Foundation Pits
7th Ave Post 11-12E

STS Consultants Ltd.
Consulting Engineers

December 27, 1995

Mrs. Carol Becker
United Defense L.P., FMC/BMY
4800 East River Road
Minneapolis, MN 55421-1498

STS Project 96447

Re: Documentation Report for the Subsurface Exploration at the Former Foundation Pits
United Defense Request for Quotation #100895, PO # 95-632843-22

Dear Mrs. Becker:

STS Consultants Ltd. has completed the three soil borings in the vicinity of the Former Foundation Pits at the 7th Ave Post 11-12E per RFQ 100895, dated 10-20-95, and Purchase Order No. 95-632843-22. This report documents the procedures of the soil sampling.

STS appreciates the opportunity to assist United Defense on this project. If you have any questions with regard to the project, please contact us at 559-1900.

Respectfully,

STS CONSULTANTS, LTD.

Donald C. Johnston, Jr.
Geologist

James H. Overtoom, P.E.
Principal Engineer

DCJ/dn
Encs.
C4470001.DOC

STS Consultants Ltd.
Consulting Engineers

3650 Annapolis Lane
Suite 120
Minneapolis, Minnesota 55447
612.559.1900/Fax 612.559.4507

TABLE OF CONTENTS

		Page No.
1.0	Introduction	1
2.0	Exploration Procedures	2
2.1	Soil Boring Location	2
2.2	Subsurface Exploration Procedures	2
2.3	Soil Sample Screening	3
2.4	Soil Chemical Sampling	3
3.0	Exploration Results	5
3.1	Soil Conditions	5
3.2	Soil Sample Screening	5
3.3	Soil Chemical Analyses	6
4.0	Summary	7

APPENDIX

Documentation Report for the Subsurface Exploration
at the Former Foundation Pits
United Defense Request for
Quotation #100895, PO # 95-6328443-22

1.0 INTRODUCTION

STS Consultants, Ltd. completed three soil borings to approximately 21 feet. Boring B-1 is located at 6th Ave Post, 12.E, and borings B-2 and B-3 are located at the 7th Ave Post 11-12 E. which is inside the main plant.

The United Defense requested three borings to be drilled to a minimum depth of 15 feet below grade or until no detectable jar head space readings are measured. The maximum depth would be the surficial water table expected at approximately 25 feet.

This report documents the completion of the three soil borings and summarizes the results of the soil chemical analyses.

2.0 EXPLORATION PROCEDURES

2.1 Soil Boring Location

The soil borings locations were selected at the site by United Defense Representatives. A location diagram of borings B-2 and B-3 is included in the appendix. No diagram of the boring B-3 area was provided to STS, and none is provided with this report.

Surface elevations were not determined for this project.

2.2 Subsurface Exploration Procedures

The soil borings were completed on November 28 and 29, 1995. The drilling was performed using a Diedrich D-50 mounted drill rig. Prior to mobilizing the drill rig to the site, the drill rig and sampling tools were steam cleaned. Hollow stem auger and drill rods were not reused between the boreholes to reduce the risk of cross-contamination between boring locations. The split-spoons were rinsed in fresh water and Alconox detergent between samples.

At each of the three boring locations, concrete was present at the surface. The concrete was drilled with an electric drill and 8 inch diamond core bit. At B-1 and B-2 a second concrete layer existed at depth. The second concrete layer was drilled with 3-1/4 inch ID hollow stem auger. STS completed drilling the three soil borings using 3-1/4 inch ID hollow stem auger with a 2.0 foot sample interval. Representative soil samples were be obtained using 2 inch diameter split-spoon samplers in general conformance with ASTM Specification D-1586.

Upon completion of the boring the borehole was grouted with neat cement grout tremied to the bottom of the drilled hole. As the hollow stem augers were removed, the augers were topped with cement grout after each 5 foot section was removed.

Soil samples obtained from the boreholes were classified in the field by an environmental geologist in general accordance with the Unified Soil Classification (USCS). The soil boring log showing the soil type, strata changes, sampling intervals, HNU meter readings and chemical sample depths is included in the Appendix.

2.3 Soil Sample Screening

The soil samples were screened using an HNU photoionization detection meter (PID) for field identification of impacts. The HNU meter is a portable instrument used to detect and qualitatively measure a variety of organic compounds in the air. The HNU meter is equipped with a 10.2 eV lamp calibrated to a benzene gas. The HNU was calibrated on-site each day.

The soils were removed from the split-barrel sampler and placed in a new glass container, then covered with aluminum foil. The samples were agitated and an HNU meter deflection was obtained from the head space in the jar above the soil sample. The head space screening procedure was in general conformance with the Minnesota Pollution Control Agency procedure. The HNU meter readings are recorded on the soil boring logs.

2.4 Soil Chemical Sampling

Chemical soil samples, analyzed for DRO and VOC MDH 465D, were to be obtained at the bottom soil sample from each boring, and on the soil sample with the highest PID reading or most staining.

One soil chemical sample was obtained from soil boring B-1, and two from each of the other two borings B-2 and B-3.

Soil samples analyzed for DRO and VOC 465D were placed in 125 ml containers with Teflon septum and screw-on cap. A 40 ml amber vial for moisture determination was also obtained for

each sample. Soil amounts in each jar were obtained following PACE Laboratories, Incorporated Sampling Instructions. A copy of the Sampling Instructions are included in the Appendix.

The sample containers were placed in a cooler with ice and transported to PACE Laboratories. An STS chain of custody record accompanied the samples as included with the laboratory analysis report in the Appendix.

No soil chemical sample was obtained at boring B-1 S3 due to small sample recovery. An HNU meter reading of 10 was obtained at that sample interval. This was the highest reading at that boring. Boring B-1 S10 sample from 19 to 20 feet was collected immediately above the water table surface. The soil samples collected at boring B-2 were obtained at S6 11.5 to 13.5 feet, just below the second concrete layer, and S9 17.5 to 18.5 feet just above the glacial till clay. No groundwater was observed at boring B-2. Soil samples collected at boring B-3 were obtained at S1 3.0 to 5.0 feet, just below the concrete slab and S7 15.0 to 16.0 feet just above the glacial till clay layer. No groundwater was observed at this borehole.

At the end of each borehole the STS geologist contacted a United Defense representative, and discussed the soils, HNU readings, and possible depth of chemical samples, before the boreholes were terminated. The United Defense representative chose which samples to have analyzed.

3.0 EXPLORATION RESULTS

3.1 Soil Conditions

Soil samples logged at boring B-1 generally consisted of fine sand and fine to coarse sand. Groundwater was measured at 19.6 feet below grade while performing the soil boring. Two concrete layers exist at boring B-1. The first concrete layer is from 0 to 0.6 feet (7"), with a fine sand below the concrete to 3.5 feet. The second concrete layer was found at 3.5 to 5.0 feet.

At boring B-2 two concrete layers were found. The first concrete layer was from surface to 0.5 feet (6 inches thick). Fine to coarse sand fill exist below the surface concrete layer to 9.8 feet. At 9.8 feet the second concrete layer was found, and was 1.7 feet thick. Soil samples logged below the bottom of the second concrete layer 11.5 feet consisted of fine to coarse sand to 18.0 feet, 11.5 to 13.5 feet is fill. At 18 feet a silty clay glacial till was found. The boring was terminated at 21.5 feet within the clay without encountering groundwater. The surface elevation change between boring B-1 and B-2 is estimated to be less than 0.2 feet.

At boring B-3, 3.0 feet of concrete with rebar was found at the surface. Soil samples logged in boring B-3 consisted of fine sand and fine to medium sand to 14.5 feet. Then a gravel seam from 14.5 to 15 feet, with a clayey sand seam from 15 to 16 feet was encountered. A silty clay glacial till was found at 16.0 feet and continued to the borehole completed depth of 21.0 feet. No groundwater was observed in this borehole. Boring B-3 was drilled in the pit, with a surface grade change of approximately 18 inches lower than boring B-1 and B-2.

3.2 Soil Sample Screening

Elevated PID meter readings were observed in soil samples obtained from boring B-1 S3, the sample just below the second concrete slab, and in boring B-2 S6 and S7, also the samples just below the second concrete slab. In boring B-3 HNU meter readings below the concrete slab were 1

HNU meter units, or background. It should be noted that the 3.0 foot thick concrete slab was cored on 11/28/95, with wash water from coring entering the sand. The soil sampling of the boring was started on 11/29/95. The hole was left open overnight; possible venting volatiles which may have existed below concrete slab. No elevated HNU readings were observed in boring B-3. PID readings are displayed on the soil boring logs in the Appendix.

3.3 Soil Chemical Analyses

The soil chemical analysis results are presented on the Report of Laboratory Analysis prepared by PACE Laboratory, and included in the Appendix of this report.

Boring B-1 S10 was not detected (ND) at or above the PACE Reporting Limit (PRL), except for a hit on Methylene Chloride ug/kg(ppb) = 50, PRL = 48 ug/kg. PACE footnoted this hit as possible laboratory contaminant (PC).

Boring B-2 S6 had a Diesel Range Organic Compounds (DRO) hit of 150 mg/kg (ppm). Boring B-2 S6, DRO = 98 mg/kg. with ND on VOC compounds.

Boring B-3 S1, DRO = 12 mg/kg, and VOCs = 25 ug/kg of 1,1,1-Trichlorethane. Boring B-3 #7, DRO = 26 mg/kg, VOCs = ND. The HB footnote indicates possible other compounds possible exist.

4.0 SUMMARY

Soil Chemical sampling confirms petroleum impacts to soil. However no staining of soil was observed in any of the three borings. Soil chemical sample at water table in B-1 indicates no impacts extend to groundwater. In borings B-2 and B-3 no groundwater was observed due to a silty clay glacial till layer.

APPENDIX

1. Changed Conditions Clause
2. Soil Boring Location Diagram
3. Soil Boring Logs
4. Pace Laboratories Sampling Instructions
5. Pace Laboratories Report of Laboratory Analysis
6. STS Chain of Custody Record
7. General Notes
8. Unified Soil Classification System
9. Field and Laboratory Procedures
10. Standard Boring Log Procedures
11. Sampling Procedures:

    ASTM Specification D-1586

STS Changed Conditions Clause

STS CONSULTANTS, LTD.

The following is a suggested standard clause for unanticipated subsurface conditions:

"The owner has had a subsurface exploration performed by a foundation consultant, the results of which are contained in the consultant's report. The consultant's report presents his conclusions on the subsurface conditions based on his interpretation of the data obtained in the exploration. The contractor acknowledges that he has reviewed the consultant's report and any addenda thereto, and that his bid for earthwork operations is based on the subsurface conditions, as described in that report. It is recognized that a subsurface exploration may not disclose all conditions as they actually exist and further, conditions may change, particularly groundwater conditions, between the time of subsurface exploration and the time of earthwork operations. In recognition of these facts, this clause is entered in the contract to provide a means of equitable additional compensation for the contractor if adverse unanticipated conditions are encountered and to provide a means of rebate to the owner if the conditions are more favorable than anticipated.

At any time during earthwork, paving and foundation construction operations that the contractor encounters conditions that are different than those anticipated by the foundation consultant's report, he shall immediately (within 24 hours) bring this fact to the owner's attention. If the owner's representative on the construction site observes subsurface conditions which are different than those anticipated by the foundation consultant's report, he shall immediately (within 24 hours) bring this fact to the contractor's attention. Once a fact of unanticipated conditions has been brought to the attention of either the owner or the contractor, and the consultant has concurred, immediate negotiations will be undertaken between the owner and the contractor to arrive at a change in contract price for additional work or reduction in work because of the unanticipated conditions. The contractor agrees that the following unit prices would apply for additional or reduced work under the contract. For changed conditions for which unit prices are not provided, the additional work shall be paid for on a time and material basis."

Another example of a changed conditions clause can be found in paper No. 4035 by Robert F. Borg, published in ASCE Construction Division Journal, No. CO2, September 1964, page 37.

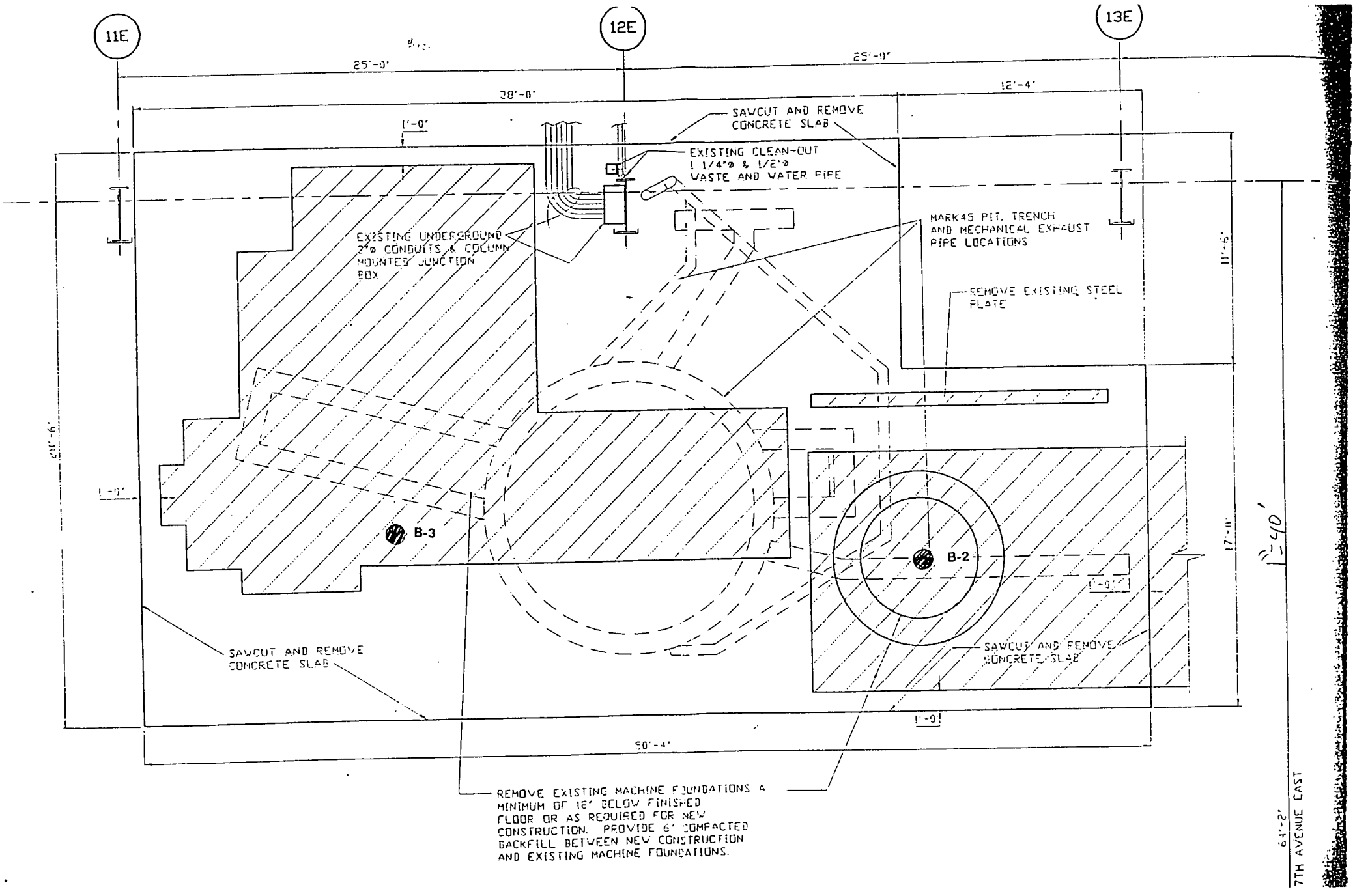
11E
12E
13E
25'-0"
25'-0"
28'-0"
12'-4"
1'-0"
SAWCUT AND REMOVE CONCRETE SLAB
EXISTING CLEAN-OUT 1 1/4"ø & 1/2"ø WASTE AND WATER PIPE
EXISTING UNDERGROUND 2"ø CONDUITS & COLUMN MOUNTED JUNCTION BOX
MARK45 PIT, TRENCH AND MECHANICAL EXHAUST PIPE LOCATIONS
REMOVE EXISTING STEEL PLATE
11'-6"
17'-0"
1'-0"
B-3
B-2
1'-0"
SAWCUT AND REMOVE CONCRETE SLAB
SAWCUT AND REMOVE CONCRETE SLAB
1'-0"
50'-4"
REMOVE EXISTING MACHINE FOUNDATIONS A MINIMUM OF 18" BELOW FINISHED FLOOR OR AS REQUIRED FOR NEW CONSTRUCTION. PROVIDE 6" COMPACTED BACKFILL BETWEEN NEW CONSTRUCTION AND EXISTING MACHINE FOUNDATIONS.
64'-2"
7TH AVENUE EAST

Current Map

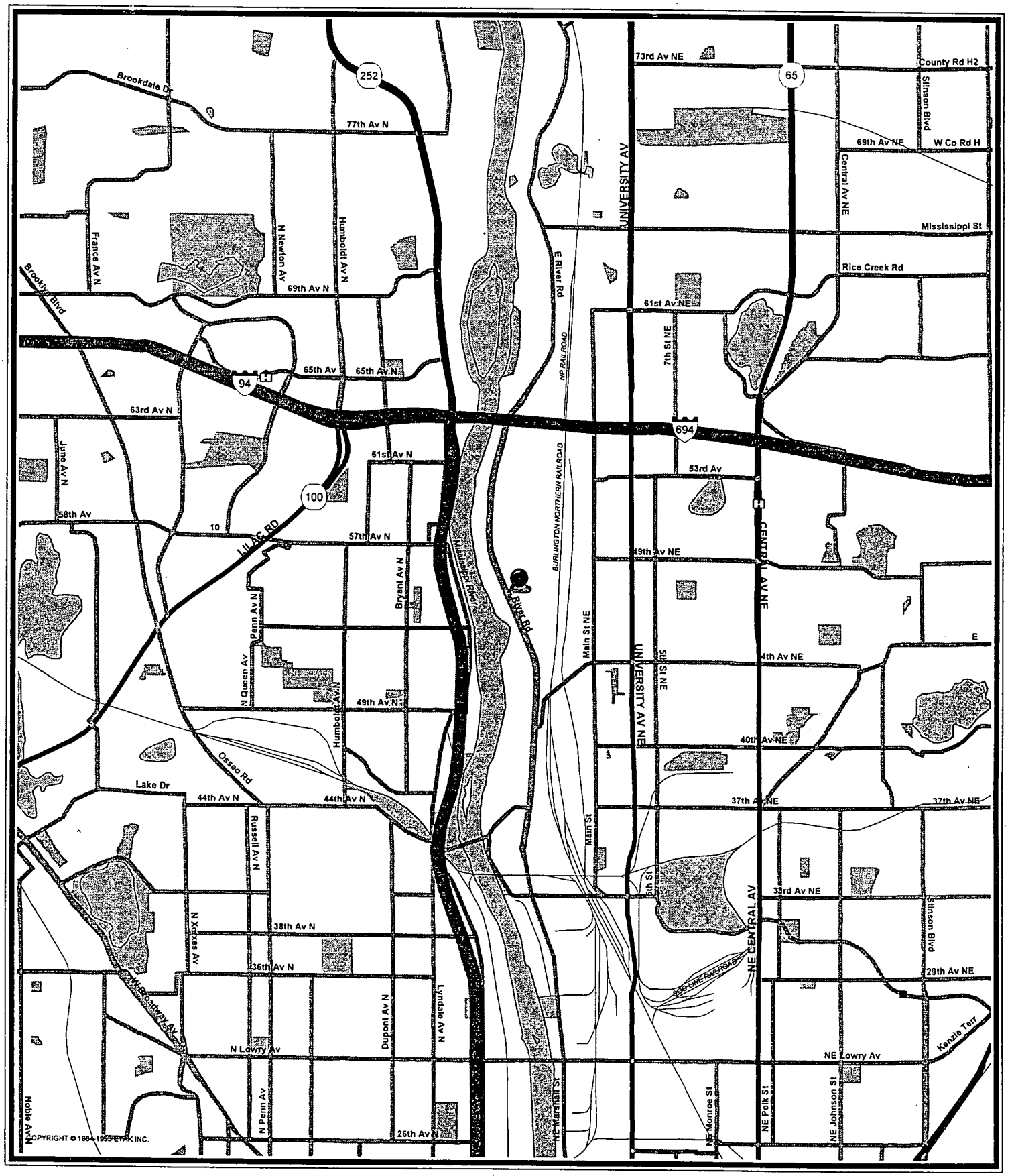

© 1996 by Rand McNally & Company. All rights reserved.

STS Consultants Ltd.

CLIENT: United Defense FMC/BMY	LOG OF BORING NUMBER: B-1 6th Ave-Post & 12 E.
PROJECT NAME: Former Foundation Pits	ARCHITECT-ENGINEER

SITE LOCATION: 4800 East River Road, Minneapolis, Minnesota

UNCONFINED COMPRESSIVE STRENGTH TONS/FT.^{2} (1 2 3 4 5)

PLASTIC LIMIT % — WATER CONTENT % — LIQUID LIMIT % (10 20 30 40 50)

STANDARD PENETRATION BLOWS/FT. (10 20 30 40 50)

DEPTH (FT)	ELEVATION (FT)	SAMPLE NO.	SAMPLE TYPE	SAMPLE DISTANCE	RECOVERY	DESCRIPTION OF MATERIAL (SURFACE ELEVATION MSL)	PHOTO-IONIZATION DETECTOR READING (PPM)	STANDARD PENETRATION BLOWS/FT.
			DB			7" Concrete		
		S1	SS			Fine to coarse sand, trace silt - brown - moist - (SW) - fill	1	2
		S2	SS				1	4
5.0			DB			1 foot 6 inches concrete		
		S3	SS			Fine sand, little silt - brown - moist - very loose - (SM) - fill Note: No Staining.	10	2
		S4	SS				2	2
10.0		S5	SS			Very fine to coarse sand, trace silt - gray brown - moist - medium dense - (SP) Note: No staining	1	19
		S6	SS				1	25
		S7	SS				2	22
15.0								
		S8	SS			Fine to medium sand, trace silt - brown - moist - medium dense - (SP)	1	19
		S9	SS			Fine to coarse sand, trace gravel, trace silt - brown - moist - dense - (SP) Note: No staining	1	32
		S10	SS				1	8/6"
20.0		S10	SS			Fine to coarse sand, trace gravel - gray brown - saturated at 19.6 feet - medium dense - (SP) Note: No staining Color change to gray at 20 feet.	1	24
21.0								

End of boring at 21.0 feet.
Drilled and samples with 3-1/4" ID hollow stem augers to full depth.
Borehole grouted with neat cement grout.
Photoionization readings obtained with a HNU photoionization meter equipped with a 10.2 eV lamp, calibrated to a benzene reference gas.
HNU background readings 0 - 1 HNU meter units.

Sample S10 19.0 to 20.0 feet and prepared and submitted for chemical analysis. DRO VOC'S

The stratification lines represent the approximate boundary lines between soil types: in-situ, the transition may be gradual.

WL 19.6 ft WS OR WD WS	BORING STARTED 11/28/95	STS OFFICE Minnesota	
WL BCR 19.6 ft ACR	BORING COMPLETED 11/28/95	ENTERED BY DCJ	SHEET NO. 1 OF 1
WL	RIG/FOREMAN D-50/GD & DJ	APP'D BY DCJ	STS JOB NO. 96447

STS Consultants Ltd.

CLIENT	LOG OF BORING NUMBER
United Defense FMC/BMY	B-2
	7th Ave-Post 12 NE
PROJECT NAME	ARCHITECT-ENGINEER
Former Foundation Pits	

SITE LOCATION
4800 East River Road, Minneapolis, Minnesota

DEPTH (FT)	ELEVATION (FT)	SAMPLE NO.	SAMPLE TYPE	SAMPLE DISTANCE	RECOVERY	DESCRIPTION OF MATERIAL	PHOTO-IONIZATION DETECTOR READING (PPM)
						SURFACE ELEVATION MSL	
			DB			6" Concrete	
		S1	SS			Fine to coarse sand, little gravel, trace silt, cement fragments - dark brown - moist - medium dense - (SP-SM) - fill	1
		S2	SS			Fine to coarse sand. little silt, little gravel - dark brown - moist - loose - (SM) - fill Note: No staining	1
5.0		S3	SS			Fine to coarse sand, trace gravel, trace silt - brown - moist - loose - (SP-SM) - fill Note: No staining	1
		S4	SS			Fine to coarse sand, some gravel, trace silt, cponcrete fragments - dark brown - moist - loose - (SP-SM) - fill Note: No staining	1
		S5	SS			1 foot 8 inches concrete	4
10.0			DB			Fine to coarse sand, little gravel, little silt - moist - very dense - (SM) - fill Note: No Staining	9
		S6	SS			Fine to coarse sand, little gravel, little silt - moist - moist - medium dense - (SP) - possible fill Note: No staining	4
15.0		S7	SS			Fine sand, trace silt - brown - moist - very dense - (SP) Note: No staining	2
		S8	SS			Fine to coarse sand, some gravel, trace silt - dark brown - moist - dense - (SP-SW) Note: No staining	2
		S9	SS			Silty clay, little sand, trace gravel - gray - stiff - (CL)	1
		S9A	SS			End of boring at 21.5 feet. Drilled and samples with 3-1/4" ID hollow stem augers to full depth. Borehole grouted with neat cement grout. Photoionization readings obtained with a HNU photoionization meter equipped with a 10.2 eV lamp, calibrated to a benzene reference gas. HNU background readings 0 - 1 HNU meter units. Sample S6 11.5 to 13.5 feet and sample S9 17.5 to 18.5 feet prepared and submitted for chemical analysis. DRO VOC'S	1
20.0		S10	SS				1
21.5							

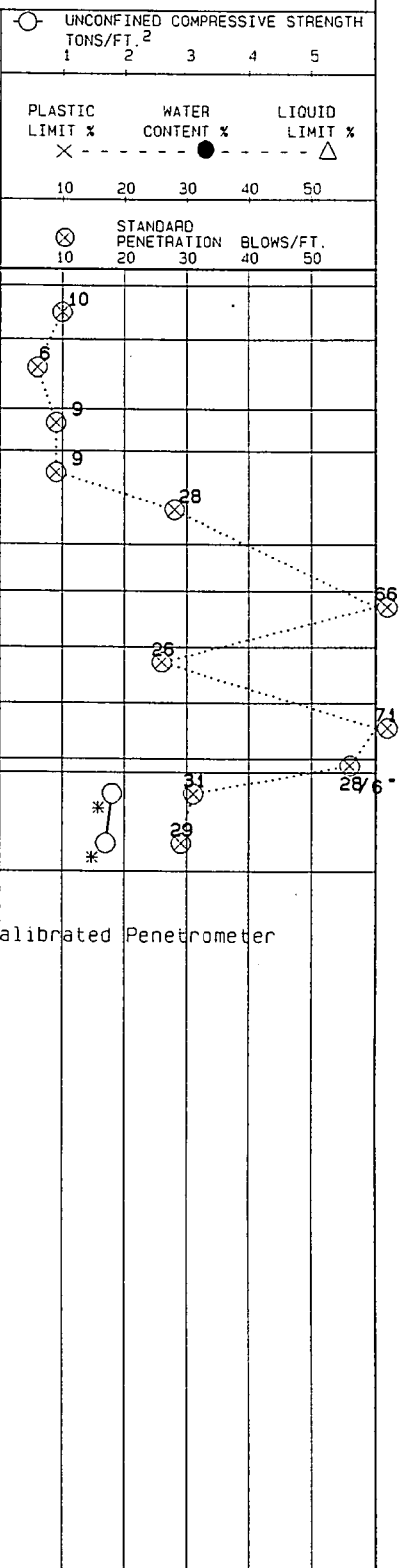

* Calibrated Penetrometer

The stratification lines represent the approximate boundary lines between soil types: in-situ, the transition may be gradual.

WL	WS OR WD	BORING STARTED	STS OFFICE
	WS	11/28/95	Minnesota
WL BCR	ACR	BORING COMPLETED 11/28/95	ENTERED BY DCJ / SHEET NO. 1 OF 1
WL Not observed		RIG/FOREMAN D-50/GD & DJ	APP'D BY DCJ / STS JOB NO. 96447

STS Consultants Ltd.

CLIENT: United Defense FMC/BMY	LOG OF BORING NUMBER B-3 7th Ave-Post 12 NE, IN PIT
PROJECT NAME: Former Foundation Pits	ARCHITECT-ENGINEER

SITE LOCATION: 4800 East River Road, Minneapolis, Minnesota

SURFACE ELEVATION: MSL

DEPTH (FT)	ELEVATION (FT)	SAMPLE NO.	SAMPLE TYPE	SAMPLE DISTANCE	RECOVERY	DESCRIPTION OF MATERIAL	PHOTO-IONIZATION DETECTOR READING (PPM)
			DB			3.0 feet concrete	
5.0		S1	SS			Fine sand, trace silt, trace gravel, trace medium & coarse sand - brown - dry - medium dense - (SP-SM) - fill Note: No staining	1
		S2	SS				1
		S3	SS			Fine sand, trace silt - brown - moist - brown - medium dense - (SP) - fill Note: No staining	1
10.0		S4	SS			Fine sand, trace silt - brown - moist - medium dense - (SP) Note: No staining	1
		S5	SS				1
		S5A	SS			Fine to medium sand, trace silt - brown - moist - medium dense - (SP)	1
		S6	SS			Fine sand, trace silt - brown - moist - medium dense - (SP-SM) Note: No staining	1
15.0		S6A	SS				1
		S7	SS			Fine to medium sand, trace silt - brown - moist - medium dense to dense - (SP)	1
		S7A	SS				1
		S8	SS			Fine to coarse gravel, some sand, trace silt - dark brown - moist - very dense - (GP) Note: No staining	1
20.0		S9	SS			Clayey sand, some silt, little gravel - gray - moist - medium dense - (SC)	1
21.0		S9A	SS				1
						Silty clay, little sand, trace gravel - gray - stiff - (CL)	
						Silty clay, little sand, trace gravel - gray - firm - (CL)	

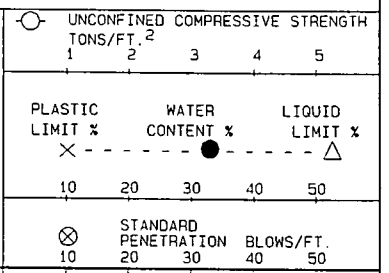

* Calibrated Penetrometer

End of boring at 21.0 feet.
Drilled and samples with 3-1/4" ID hollow stem augers to full depth.
Borehole grouted with neat cement grout.
Photoionization readings obtained with a HNU photoionization meter equipped with a 10.2 eV lamp, calibrated to a benzene reference gas.
HNU background readings 0 - 1 HNU meter units.

Sample S1 3.0 to 5.0 feet and sample S7 15.0 to 16.0 feet prepared and submitted for chemical analysis. DRO VOC'S

The stratification lines represent the approximate boundary lines between soil types: in-situ, the transition may be gradual.

WL WS OR WD: WS	BORING STARTED: 11/28/95	STS OFFICE: Minnesota	
WL BCR / ACR	BORING COMPLETED: 11/29/95	ENTERED BY: DCJ	SHEET NO. 1 OF 1
WL: Not observed	RIG/FOREMAN: D-50/GD & DJ	APP'D BY: DCJ	STS JOB NO. 96447

pace INCORPORATED
ENVIRONMENTAL LABORATORIES

PACE Laboratories, Incorporated Sampling Instructions

GRO and DRO Sampling (Soils)

Your sampling kit should include one plastic syringe with the tip removed and one 40 ml amber vial for each sampling point and depth. The syringe is used to collect the sample. The 40 ml vial is used to hold sample for moisture determination. If metals are also being quantified at the sampling point, a 250 ml plastic containers will be used to hold sample for the metals analysis. Sample from this container can be used for moisture determination and the 40 ml amber container is not required. Two 120 ml amber containers containing 25 ml of Methanol are used to hold sample to be analyzed for UST volatile compounds (e.g.: 8021, GRO, PVOC). If low level PVOC or 8021 analysis is required in conjunction with GRO, four 125 ml containers are required. For DRO analysis, two 120 ml amber sample containers are also used, but they will not contain methanol preservative. Sample as follows:

1. Remove the plunger from the syringe.(a)
2. Press the syringe cylinder into the soil profile.
3. Remove the cylinder from the profile and re-insert the plunger.
4. Press the plunger to expel the soil core into the sample container. (b)
5. Add three cores to each 125 ml container.
6. Cap, assuring a good seal is achieved, and label each container.
7. Keep the samples on ice and return to PACE via next day shipment.

a) WIDNR recommends the use of plastic syringes for sampling. If this is too cumbersome, simply **fill the sample container one-quarter to one-third full**. It is **important** not to overfill the container.
b) It is **important** not to let Methanol spill out when filling the container. The weight of soil in the container is determined by difference in the lab.

If questions arise during sampling, contact your PACE Project Manager (612-544-5543).

NOTE:

Just one soil jar is needed to collect the VOC 465D sample. The jar is filled completely, to the exclusion of headspace.

1710 Douglas Drive North
Minneapolis, MN 55422
TEL: 612-544-5543
FAX: 612-525-3377

An Equal Opportunity Employer

DEC 1 5 1995

pace INCORPORATED
ENVIRONMENTAL LABORATORIES

REPORT OF LABORATORY ANALYSIS

December 14, 1995

Mr. Don Johnston
STS Consultants, Ltd.
3650 Annapolis Lane
Minneapolis, MN 55447

RE: PACE Project No. 951129.514
Client Reference: 96447

Dear Mr. Johnston:

Enclosed is the report of laboratory analyses for samples received November 29, 1995.

Footnotes are given at the end of the report.

If you have any questions concerning this report, please feel free to contact us.

Sincerely,

Mary Jo Connolly
Project Manager

Enclosures

1710 Douglas Drive North
Minneapolis, MN 55422
TEL: 612-544-5543
FAX: 612-525-3377

An Equal Opportunity Employer

ENVIRONMENTAL LABORATORIES

REPORT OF LABORATORY ANALYSIS

STS Consultants, Ltd.
3650 Annapolis Lane
Minneapolis, MN 55447

December 14, 1995
PACE Project Number: 951129514

Attn: Mr. Don Johnston

Client Reference: 96447

PACE Sample Number:			10 0354503	10 0354511	10 0354520
Date Collected:			11/28/95	11/28/95	11/28/95
Time Collected:			13:15	15:05	15:45
Date Received:			11/29/95	11/29/95	11/29/95
Client Sample ID:			B-1 S#10	B-2 S#6	B-2 S#9
Parameter	Units	PRL			
INORGANIC ANALYSIS					
INDIVIDUAL PARAMETERS					
Moisture content	%	0.1	13.8	4.4	3.8
ORGANIC ANALYSIS					
DIESEL RANGE ORGANICS-MOD. 8015					
Date Analyzed			05DEC95 EE	05DEC95 EE	05DEC95 EE
Date Extracted			12/01/95	12/01/95	12/01/95
Diesel Range Organic Compounds	mg/kg	10	ND	150	ND
n-Tricontane (Surrogate Std.)	%		98	62	98
Elapse Time, Receipt to Solvent Addition	Minutes	10	459	459	459
MDH 465D: VOLATILE ORGANICS IN A SOLID					
Date Analyzed			3DEC95 L	3DEC95 L	7DEC95 D
Dichlorodifluoromethane	ug/kg	76	ND	ND	ND
Chloromethane	ug/kg	76	ND	ND	ND
Vinyl Chloride	ug/kg	76	ND	ND	ND
Bromomethane	ug/kg	76	ND	ND	ND
Chloroethane	ug/kg	48	ND	ND	ND
Dichlorofluoromethane	ug/kg	48	ND	ND	ND
Trichlorofluoromethane	ug/kg	25	ND	ND	ND
Ethyl ether	ug/kg	250	ND	ND	ND
1,1,2-Trichlorotrifluoroethane	ug/kg	48	ND	ND	ND
Acetone	ug/kg	2000	ND	ND	ND
1,1-Dichloroethylene	ug/kg	25	ND	ND	ND
Allyl chloride	ug/kg	100	ND	ND	ND
Methylene Chloride	ug/kg	48	50 PC	ND	ND
Methyl tert-Butyl Ether	ug/kg	200	ND	ND	ND
trans-1,2-Dichloroethylene	ug/kg	25	ND	ND	ND
1,1-Dichloroethane	ug/kg	25	ND	ND	ND
Methyl ethyl ketone	ug/kg	1200	ND	ND	ND

1710 Douglas Drive North
Minneapolis, MN 55422
TEL: 612-544-5543
FAX: 612-525-3377

An Equal Opportunity Employer

ENVIRONMENTAL LABORATORIES

REPORT OF LABORATORY ANALYSIS

Mr. Don Johnston
Page 2

December 14, 1995
PACE Project Number: 951129514

Client Reference: 96447

PACE Sample Number:			10 0354503	10 0354511	10 0354520
Date Collected:			11/28/95	11/28/95	11/28/95
Time Collected:			13:15	15:05	15:45
Date Received:			11/29/95	11/29/95	11/29/95
Client Sample ID:			B-1 S#10	B-2 S#6	B-2 S#9
Parameter	Units	PRL			
ORGANIC ANALYSIS					
MDH 465D: VOLATILE ORGANICS IN A SOLID					
2,2-Dichloropropane	ug/kg	25	ND	ND	ND
cis-1,2-Dichloroethylene	ug/kg	25	ND	ND	ND
Chloroform	ug/kg	25	ND	ND	ND
Bromochloromethane	ug/kg	48	ND	ND	ND
Tetrahydrofuran	ug/kg	1000	ND	ND	ND
1,1,1-Trichloroethane	ug/kg	25	ND	ND	ND
1,1-Dichloropropene	ug/kg	48	ND	ND	ND
Carbon Tetrachloride	ug/kg	25	ND	ND	ND
Benzene	ug/kg	25	ND	ND	ND
1,2-Dichloroethane	ug/kg	25	ND	ND	ND
1,2-Dichloropropane	ug/kg	25	ND	ND	ND
1,1,2-Trichloroethylene	ug/kg	25	ND	ND	ND
Dibromomethane	ug/kg	76	ND	ND	ND
Bromodichloromethane	ug/kg	25	ND	ND	ND
Methyl isobutyl ketone	ug/kg	400	ND	ND	ND
cis-1,3-Dichloro-1-propene	ug/kg	25	ND	ND	ND
Toluene	ug/kg	40	ND	ND	ND
trans-1,3-Dichloro-1-propene	ug/kg	25	ND	ND	ND
1,1,2-Trichloroethane	ug/kg	25	ND	ND	ND
1,3-Dichloropropane	ug/kg	40	ND	ND	ND
1,1,2,2-Tetrachloroethylene	ug/kg	48	ND	ND	ND
Dibromochloromethane	ug/kg	48	ND	ND	ND
1,2-Dibromoethane	ug/kg	200	ND	ND	ND
Chlorobenzene	ug/kg	40	ND	ND	ND
1,1,1,2-Tetrachloroethane	ug/kg	25	ND	ND	ND
Ethyl benzene	ug/kg	40	ND	ND	ND
m-Xylene	ug/kg	40	ND	ND	ND
p-Xylene	ug/kg	40	ND	ND	ND
o-Xylene	ug/kg	40	ND	ND	ND
Styrene	ug/kg	40	ND	ND	ND
Bromoform	ug/kg	48	ND	ND	ND

1710 Douglas Drive North
Minneapolis, MN 55422
TEL: 612-544-5543
FAX: 612-525-3377

An Equal Opportunity Employer

ENVIRONMENTAL LABORATORIES

REPORT OF LABORATORY ANALYSIS

Mr. Don Johnston
Page 3

December 14, 1995
PACE Project Number: 951129514

Client Reference: 96447

PACE Sample Number:			10 0354503	10 0354511	10 0354520
Date Collected:			11/28/95	11/28/95	11/28/95
Time Collected:			13:15	15:05	15:45
Date Received:			11/29/95	11/29/95	11/29/95
Client Sample ID:			B-1 S#10	B-2 S#6	B-2 S#9
Parameter	Units	PRL			
ORGANIC ANALYSIS					
MDH 465D: VOLATILE ORGANICS IN A SOLID					
Cumene	ug/kg	48	ND	ND	ND
1,1,2,2-Tetrachloroethylane	ug/kg	48	ND	ND	ND
1,2,3-Trichloropropane	ug/kg	200	ND	ND	ND
Bromobenzene	ug/kg	48	ND	ND	ND
n-Propylbenzene	ug/kg	48	ND	ND	ND
2-Chlorotoluene	ug/kg	48	ND	ND	ND
1,3,5-Trimethylbenzene	ug/kg	40	ND	ND	ND
4-Chlorotoluene	ug/kg	76	ND	ND	ND
tert-Butylbenzene	ug/kg	40	ND	ND	ND
1,2,4-Trimethylbenzene	ug/kg	40	ND	ND	ND
sec-Butylbenzene	ug/kg	48	ND	ND	ND
p-Cymene	ug/kg	48	ND	ND	ND
1,3-Dichlorobenzene	ug/kg	48	ND	ND	ND
1,4-Dichlorobenzene	ug/kg	48	ND	ND	ND
n-Butylbenzene	ug/kg	60	ND	ND	ND
1,2-Dichlorobenzene	ug/kg	48	ND	ND	ND
1,2-Dibromo-3-chloropropane	ug/kg	40	ND	ND	ND
1,2,4-Trichlorobenzene	ug/kg	60	ND	ND	ND
Hexachlorobutadiene	ug/kg	100	ND	ND	ND
Naphthalene	ug/kg	60	ND	ND	ND
1,2,3-Trichlorobenzene	ug/kg	60	ND	ND	ND
Fluorobenzene (Surrogate)	%		86.4	87.5	93.1

1710 Douglas Drive North
Minneapolis, MN 55422
TEL: 612-544-5543
FAX: 612-525-3377

An Equal Opportunity Employer

pace INCORPORATED
ENVIRONMENTAL LABORATORIES

REPORT OF LABORATORY ANALYSIS

December 14, 1995
PACE Project Number: 951129514

Client Reference: 96447

PACE Sample Number:			10 0354538	10 0354546
Date Collected:			11/29/95	11/29/95
Time Collected:			07:55	09:15
Date Received:			11/29/95	11/29/95
Client Sample ID:			B-3 S#1	B-3 S#7
Parameter	Units	PRL		
INORGANIC ANALYSIS				
INDIVIDUAL PARAMETERS				
Moisture content	%	0.1	3.1	8.6
ORGANIC ANALYSIS				
DIESEL RANGE ORGANICS-MOD. 8015				
Date Analyzed			05DEC95 EE	05DEC95 EE
Date Extracted			12/01/95	12/01/95
Diesel Range Organic Compounds	mg/kg	10	12	26 HB
n-Tricontane (Surrogate Std.)	%		75	98
Elapse Time, Receipt to Solvent Addition	Minutes	10	459	459
MDH 465D: VOLATILE ORGANICS IN A SOLID				
Date Analyzed			3DEC95 L	3DEC95 L
Dichlorodifluoromethane	ug/kg	76	ND	ND
Chloromethane	ug/kg	76	ND	ND
Vinyl Chloride	ug/kg	76	ND	ND
Bromomethane	ug/kg	76	ND	ND
Chloroethane	ug/kg	48	ND	ND
Dichlorofluoromethane	ug/kg	48	ND	ND
Trichlorofluoromethane	ug/kg	25	ND	ND
Ethyl ether	ug/kg	250	ND	ND
1,1,2-Trichlorotrifluoroethane	ug/kg	48	ND	ND
Acetone	ug/kg	2000	ND	ND
1,1-Dichloroethylene	ug/kg	25	ND	ND
Allyl chloride	ug/kg	100	ND	ND
Methylene Chloride	ug/kg	48	ND	ND
Methyl tert-Butyl Ether	ug/kg	200	ND	ND
trans-1,2-Dichloroethylene	ug/kg	25	ND	ND
1,1-Dichloroethane	ug/kg	25	ND	ND
Methyl ethyl ketone	ug/kg	1200	ND	ND
2,2-Dichloropropane	ug/kg	25	ND	ND
cis-1,2-Dichloroethylene	ug/kg	25	ND	ND

1710 Douglas Drive North
Minneapolis, MN 55422
TEL: 612-544-5543
FAX: 612-525-3377

An Equal Opportunity Employer

ENVIRONMENTAL LABORATORIES

REPORT OF LABORATORY ANALYSIS

Mr. Don Johnston
Page 5

December 14, 1995
PACE Project Number: 951129514

Client Reference: 96447

PACE Sample Number:			10 0354538	10 0354546
Date Collected:			11/29/95	11/29/95
Time Collected:			07:55	09:15
Date Received:			11/29/95	11/29/95
Client Sample ID:			B-3 S#1	B-3 S#7
Parameter	Units	PRL		
ORGANIC ANALYSIS				
MDH 465D: VOLATILE ORGANICS IN A SOLID				
Chloroform	ug/kg	25	ND	ND
Bromochloromethane	ug/kg	48	ND	ND
Tetrahydrofuran	ug/kg	1000	ND	ND
1,1,1-Trichloroethane	ug/kg	25	37	ND
1,1-Dichloropropene	ug/kg	48	ND	ND
Carbon Tetrachloride	ug/kg	25	ND	ND
Benzene	ug/kg	25	ND	ND
1,2-Dichloroethane	ug/kg	25	ND	ND
1,2-Dichloropropane	ug/kg	25	ND	ND
1,1,2-Trichloroethylene	ug/kg	25	ND	ND
Dibromomethane	ug/kg	76	ND	ND
Bromodichloromethane	ug/kg	25	ND	ND
Methyl isobutyl ketone	ug/kg	400	ND	ND
cis-1,3-Dichloro-1-propene	ug/kg	25	ND	ND
Toluene	ug/kg	40	ND	ND
trans-1,3-Dichloro-1-propene	ug/kg	25	ND	ND
1,1,2-Trichloroethane	ug/kg	25	ND	ND
1,3-Dichloropropane	ug/kg	40	ND	ND
1,1,2,2-Tetrachloroethylene	ug/kg	48	ND	ND
Dibromochloromethane	ug/kg	48	ND	ND
1,2-Dibromoethane	ug/kg	200	ND	ND
Chlorobenzene	ug/kg	40	ND	ND
1,1,1,2-Tetrachloroethane	ug/kg	25	ND	ND
Ethyl benzene	ug/kg	40	ND	ND
m-Xylene	ug/kg	40	ND	ND
p-Xylene	ug/kg	40	ND	ND
o-Xylene	ug/kg	40	ND	ND
Styrene	ug/kg	40	ND	ND
Bromoform	ug/kg	48	ND	ND
Cumene	ug/kg	48	ND	ND
1,1,2,2-Tetrachloroethylane	ug/kg	48	ND	ND

1710 Douglas Drive North
Minneapolis, MN 55422
TEL: 612-544-5543
FAX: 612-525-3377

An Equal Opportunity Employer

ENVIRONMENTAL LABORATORIES

REPORT OF LABORATORY ANALYSIS

Mr. Don Johnston
Page 6

December 14, 1995
PACE Project Number: 951129514

Client Reference: 96447

PACE Sample Number:			10 0354538	10 0354546
Date Collected:			11/29/95	11/29/95
Time Collected:			07:55	09:15
Date Received:			11/29/95	11/29/95
Client Sample ID:			B-3 S#1	B-3 S#7
Parameter	Units	PRL		
ORGANIC ANALYSIS				
MDH 465D: VOLATILE ORGANICS IN A SOLID				
1,2,3-Trichloropropane	ug/kg	200	ND	ND
Bromobenzene	ug/kg	48	ND	ND
n-Propylbenzene	ug/kg	48	ND	ND
2-Chlorotoluene	ug/kg	48	ND	ND
1,3,5-Trimethylbenzene	ug/kg	40	ND	ND
4-Chlorotoluene	ug/kg	76	ND	ND
tert-Butylbenzene	ug/kg	40	ND	ND
1,2,4-Trimethylbenzene	ug/kg	40	ND	ND
sec-Butylbenzene	ug/kg	48	ND	ND
p-Cymene	ug/kg	48	ND	ND
1,3-Dichlorobenzene	ug/kg	48	ND	ND
1,4-Dichlorobenzene	ug/kg	48	ND	ND
n-Butylbenzene	ug/kg	60	ND	ND
1,2-Dichlorobenzene	ug/kg	48	ND	ND
1,2-Dibromo-3-chloropropane	ug/kg	40	ND	ND
1,2,4-Trichlorobenzene	ug/kg	60	ND	ND
Hexachlorobutadiene	ug/kg	100	ND	ND
Naphthalene	ug/kg	60	ND	ND
1,2,3-Trichlorobenzene	ug/kg	60	ND	ND
Fluorobenzene (Surrogate)	%		90.1	85.8

The analyses of soil samples were performed 'as received' and do not reflect analyses on a dry weight basis unless indicated.

1710 Douglas Drive North
Minneapolis, MN 55422
TEL: 612-544-5543
FAX: 612-525-3377

An Equal Opportunity Employer

ENVIRONMENTAL LABORATORIES

REPORT OF LABORATORY ANALYSIS

Mr. Don Johnston
Page 7

December 14, 1995
PACE Project Number: 951129514

Client Reference: 96447

These data have been reviewed and are approved for release.

Mary Jo Connolly
Project Manager

1710 Douglas Drive North
Minneapolis, MN 55422
TEL: 612-544-5543
FAX: 612-525-3377

An Equal Opportunity Employer

Client Reference: 96447

HB	High boiling point hydrocarbons are present in sample.
ND	Not detected at or above the PRL.
PC	Possible laboratory contaminant.
PRL	PACE Reporting Limit

1710 Douglas Drive North
Minneapolis, MN 55422
TEL: 612-544-5543
FAX: 612-525-3377

An Equal Opportunity Employer

pace INCORPORATED
ENVIRONMENTAL LABORATORIES

REPORT OF LABORATORY ANALYSIS

Mr. Don Johnston
Page 9

QUALITY CONTROL DATA

December 14, 1995
PACE Project Number: 951129514

Client Reference: 96447

Moisture content
Batch: 10 77844
Samples: 10 0354503, 10 0354511, 10 0354520, 10 0354538, 10 0354546

METHOD BLANK AND SAMPLE DUPLICATE:

Parameter	Units	PRL	Method Blank	100353906	Duplicate of 10 0353906	RPD
Moisture content	%	0.1	ND	19.8	21.4	8%

1710 Douglas Drive North
Minneapolis, MN 55422
TEL: 612-544-5543
FAX: 612-525-3377

An Equal Opportunity Employer

REPORT OF LABORATORY ANALYSIS

Mr. Don Johnston
Page 10

QUALITY CONTROL DATA

December 14, 1995
PACE Project Number: 951129514

Client Reference: 96447

DIESEL RANGE ORGANICS-MOD. 8015
Batch: 10 78108
Samples: 10 0354503, 10 0354511, 10 0354520, 10 0354538, 10 0354546

METHOD BLANK:

Parameter	Units	PRL	Method Blank
Date Analyzed			04DEC95
Diesel Range Organic Compounds	mg/kg	10	ND
n-Tricontane (Surrogate Std.)	%		57

LABORATORY CONTROL SAMPLE AND CONTROL SAMPLE DUPLICATE:

Parameter	Units	PRL	Reference Value	Recv	Dupl Recv	RPD
Diesel Range Organic Compounds	mg/kg	10	200	65% (1)	90%	32%

1710 Douglas Drive North
Minneapolis, MN 55422
TEL: 612-544-5543
FAX: 612-525-3377

An Equal Opportunity Employer

QUALITY CONTROL DATA

December 14, 1995
PACE Project Number: 951129514

Client Reference: 96447

MDH 465D: VOLATILE ORGANICS IN A SOLID
Batch: 10 78147
Samples: 10 0354503, 10 0354511, 10 0354538, 10 0354546

METHOD BLANK:

Parameter	Units	PRL	Method Blank
Date Analyzed			3DEC95
Dichlorodifluoromethane	ug/kg	76	ND
Chloromethane	ug/kg	76	ND
Vinyl Chloride	ug/kg	76	ND
Bromomethane	ug/kg	76	ND
Chloroethane	ug/kg	48	ND
Dichlorofluoromethane	ug/kg	48	ND
Trichlorofluoromethane	ug/kg	25	ND
Ethyl ether	ug/kg	250	ND
1,1,2-Trichlorotrifluoroethane	ug/kg	48	ND
Acetone	ug/kg	2000	ND
1,1-Dichloroethylene	ug/kg	25	ND
Allyl chloride	ug/kg	100	ND
Methylene Chloride	ug/kg	48	ND
Methyl tert-Butyl Ether	ug/kg	200	ND
trans-1,2-Dichloroethylene	ug/kg	25	ND
1,1-Dichloroethane	ug/kg	25	ND
Methyl ethyl ketone	ug/kg	1200	ND
2,2-Dichloropropane	ug/kg	25	ND
cis-1,2-Dichloroethylene	ug/kg	25	ND
Chloroform	ug/kg	25	ND
Bromochloromethane	ug/kg	48	ND
Tetrahydrofuran	ug/kg	1000	ND
1,1,1-Trichloroethane	ug/kg	25	ND
1,1-Dichloropropene	ug/kg	48	ND
Carbon Tetrachloride	ug/kg	25	ND
Benzene	ug/kg	25	ND
1,2-Dichloroethane	ug/kg	25	ND
1,2-Dichloropropane	ug/kg	25	ND
1,1,2-Trichloroethylene	ug/kg	25	ND
Dibromomethane	ug/kg	76	ND
Bromodichloromethane	ug/kg	25	ND

QUALITY CONTROL DATA

December 14, 1995
PACE Project Number: 951129514

Client Reference: 96447

MDH 465D: VOLATILE ORGANICS IN A SOLID
Batch: 10 78147
Samples: 10 0354503, 10 0354511, 10 0354538, 10 0354546

METHOD BLANK:

Parameter	Units	PRL	Method Blank
Methyl isobutyl ketone	ug/kg	400	ND
cis-1,3-Dichloro-1-propene	ug/kg	25	ND
Toluene	ug/kg	40	ND
trans-1,3-Dichloro-1-propene	ug/kg	25	ND
1,1,2-Trichloroethane	ug/kg	25	ND
1,3-Dichloropropane	ug/kg	40	ND
1,1,2,2-Tetrachloroethylene	ug/kg	48	ND
Dibromochloromethane	ug/kg	48	ND
1,2-Dibromoethane	ug/kg	200	ND
Chlorobenzene	ug/kg	40	ND
1,1,1,2-Tetrachloroethane	ug/kg	25	ND
Ethyl benzene	ug/kg	40	ND
m-Xylene	ug/kg	40	ND
p-Xylene	ug/kg	40	ND
o-Xylene	ug/kg	40	ND
Styrene	ug/kg	40	ND
Bromoform	ug/kg	48	ND
Cumene	ug/kg	48	ND
1,1,2,2-Tetrachloroethylane	ug/kg	48	ND
1,2,3-Trichloropropane	ug/kg	200	ND
Bromobenzene	ug/kg	48	ND
n-Propylbenzene	ug/kg	48	ND
2-Chlorotoluene	ug/kg	48	ND
1,3,5-Trimethylbenzene	ug/kg	40	ND
4-Chlorotoluene	ug/kg	76	ND
tert-Butylbenzene	ug/kg	40	ND
1,2,4-Trimethylbenzene	ug/kg	40	ND
sec-Butylbenzene	ug/kg	48	ND
p-Cymene	ug/kg	48	ND
1,3-Dichlorobenzene	ug/kg	48	ND
1,4-Dichlorobenzene	ug/kg	48	ND
n-Butylbenzene	ug/kg	60	ND

REPORT OF LABORATORY ANALYSIS

Mr. Don Johnston
Page 13

QUALITY CONTROL DATA

December 14, 1995
PACE Project Number: 951129514

Client Reference: 96447

MDH 465D: VOLATILE ORGANICS IN A SOLID
Batch: 10 78147
Samples: 10 0354503, 10 0354511, 10 0354538, 10 0354546

METHOD BLANK:

Parameter	Units	PRL	Method Blank
1,2-Dichlorobenzene	ug/kg	48	ND
1,2-Dibromo-3-chloropropane	ug/kg	40	ND
1,2,4-Trichlorobenzene	ug/kg	60	ND
Hexachlorobutadiene	ug/kg	100	ND
Naphthalene	ug/kg	60	ND
1,2,3-Trichlorobenzene	ug/kg	60	ND
Fluorobenzene (Surrogate)	%		112

SPIKE AND SPIKE DUPLICATE:

Parameter	Units	PRL	100352110	Spike	Spike Recv	Spike Dupl Recv	RPD
Dichlorodifluoromethane	ug/kg	190.	ND DS				
Dichlorodifluoromethane	ug/kg	76		1000	97%	97%	0%
Chloromethane	ug/kg	190.	ND DS				
Chloromethane	ug/kg	76		1000	174%	176%	1%
Vinyl Chloride	ug/kg	190.	ND DS				
Vinyl Chloride	ug/kg	76		1000	103%	94%	9%
Bromomethane	ug/kg	190.	ND DS				
Bromomethane	ug/kg	76		1000	112%	108%	4%
Chloroethane	ug/kg	120.	ND DS				
Chloroethane	ug/kg	48		1000	92%	91%	1%
Trichlorofluoromethane	ug/kg	62.5	ND DS				
Trichlorofluoromethane	ug/kg	25		1000	94%	87%	8%
Ethyl ether	ug/kg	625	ND DS				
Ethyl ether	ug/kg	250		1000	64%	101%	45%
1,1,2-Trichlorotrifluoroethane	ug/kg	120.	ND DS				
1,1,2-Trichlorotrifluoroethane	ug/kg	48		1000	106%	95%	11%
Acetone	ug/kg	5000	ND DS				
Acetone	ug/kg	2000		10000	89%	112%	23%
Allyl chloride	ug/kg	250	ND DS				
Allyl chloride	ug/kg	100		1000	105%	85%	21%

pace INCORPORATED
ENVIRONMENTAL LABORATORIES

REPORT OF LABORATORY ANALYSIS

QUALITY CONTROL DATA

December 14, 1995
PACE Project Number: 951129514

Client Reference: 96447

MDH 465D: VOLATILE ORGANICS IN A SOLID
Batch: 10 78147
Samples: 10 0354503, 10 0354511, 10 0354538, 10 0354546

SPIKE AND SPIKE DUPLICATE:

Parameter	Units	PRL	100352110	Spike	Spike Recv	Spike Dupl Recv	RPD
Methyl tert-Butyl Ether	ug/kg	500	ND DS				
Methyl tert-Butyl Ether	ug/kg	200		1000	95%	45%	71%
cis-1,2-Dichloroethylene	ug/kg	62.5	ND DS				
cis-1,2-Dichloroethylene	ug/kg	25		1000	92%	88%	4%
Bromochloromethane	ug/kg	120.	ND DS				
Bromochloromethane	ug/kg	48		1000	100%	92%	8%
1,1-Dichloropropene	ug/kg	120.	ND DS				
1,1-Dichloropropene	ug/kg	48		1000	86%	92%	7%
1,2-Dichloroethane	ug/kg	62.5	ND DS				
1,2-Dichloroethane	ug/kg	25		1000	93%	83%	11%
1,2-Dichloropropane	ug/kg	62.5	ND DS				
1,2-Dichloropropane	ug/kg	25		1000	95%	88%	8%
Dibromomethane	ug/kg	190.	ND DS				
Dibromomethane	ug/kg	76		1000	106%	95%	11%
1,1,2-Trichloroethane	ug/kg	62.5	ND DS				
1,1,2-Trichloroethane	ug/kg	25		1000	104%	94%	10%
1,1,2,2-Tetrachloroethylene	ug/kg	120.	ND DS				
1,1,2,2-Tetrachloroethylene	ug/kg	48		1000	100%	90%	11%
Dibromochloromethane	ug/kg	120.	ND DS				
Dibromochloromethane	ug/kg	48		1000	98%	95%	3%
1,2-Dibromoethane	ug/kg	500	ND DS				
1,2-Dibromoethane	ug/kg	200		1000	102%	95%	7%
1,1,1,2-Tetrachloroethane	ug/kg	62.5	ND DS				
1,1,1,2-Tetrachloroethane	ug/kg	25		1000	92%	87%	6%
Ethyl benzene	ug/kg	100.	ND DS				
Ethyl benzene	ug/kg	40		1000	92%	91%	1%
p-Xylene	ug/kg	100.	ND DS				
p-Xylene	ug/kg	40		1000	93%	88%	6%
o-Xylene	ug/kg	100.	ND DS				
o-Xylene	ug/kg	40		1000	90%	87%	3%
1,1,2,2-Tetrachloroethylane	ug/kg	120.	ND DS				

1710 Douglas Drive North
Minneapolis, MN 55422
TEL: 612-544-5543
FAX: 612-525-3377

An Equal Opportunity Employer

REPORT OF LABORATORY ANALYSIS

Mr. Don Johnston
Page 15

QUALITY CONTROL DATA

December 14, 1995
PACE Project Number: 951129514

Client Reference: 96447

MDH 465D: VOLATILE ORGANICS IN A SOLID
Batch: 10 78147
Samples: 10 0354503, 10 0354511, 10 0354538, 10 0354546

SPIKE AND SPIKE DUPLICATE:

Parameter	Units	PRL	100352110	Spike	Spike Recv	Spike Dupl Recv	RPD
1,1,2,2-Tetrachloroethylane	ug/kg	48		1000	87%	86%	1%
1,2,3-Trichloropropane	ug/kg	500	ND DS				
1,2,3-Trichloropropane	ug/kg	200		1000	107%	100%	7%
Bromobenzene	ug/kg	120.	ND DS				
Bromobenzene	ug/kg	48		1000	97%	90%	7%
2-Chlorotoluene	ug/kg	120.	ND DS				
2-Chlorotoluene	ug/kg	48		1000	102%	94%	8%
1,2,4-Trimethylbenzene	ug/kg	100.	ND DS				
1,2,4-Trimethylbenzene	ug/kg	40		1000	93%	90%	3%
sec-Butylbenzene	ug/kg	120.	ND DS				
sec-Butylbenzene	ug/kg	48		1000	95%	92%	3%
1,3-Dichlorobenzene	ug/kg	120.	ND DS				
1,3-Dichlorobenzene	ug/kg	48		1000	109%	95%	14%
n-Butylbenzene	ug/kg	150.	ND DS				
n-Butylbenzene	ug/kg	60		1000	93%	89%	4%
1,2-Dibromo-3-chloropropane	ug/kg	100.	ND DS				
1,2-Dibromo-3-chloropropane	ug/kg	40		1000	108%	118%	9%
1,2,4-Trichlorobenzene	ug/kg	150.	ND DS				
1,2,4-Trichlorobenzene	ug/kg	60		1000	118%	114%	3%

LABORATORY CONTROL SAMPLE:

Parameter	Units	PRL	Reference Value	Recv
Dichlorodifluoromethane	ug/L	1.5	20.0	114%
Chloromethane	ug/L	1.5	20.0	168%
Vinyl Chloride	ug/L	1.5	20.0	100%
Bromomethane	ug/L	1.5	20.0	115%
Chloroethane	ug/L	1.0	20.0	116%
Dichlorofluoromethane	ug/L	1.0	20.0	131%
Trichlorofluoromethane	ug/L	0.5	20.0	104%
Ethyl ether	ug/L	5.0	20.0	115%

Client Reference: 96447

MDH 465D: VOLATILE ORGANICS IN A SOLID
Batch: 10 78147
Samples: 10 0354503, 10 0354511, 10 0354538, 10 0354546

LABORATORY CONTROL SAMPLE:

Parameter	Units	PRL	Reference Value	Recv
1,1,2-Trichlorotrifluoroethane	ug/L	1.0	20.0	111%
Acetone	ug/L	40.0	200	137%
1,1-Dichloroethylene	ug/L	0.5	20.0	100%
Allyl chloride	ug/L	2.0	20.0	96%
Methylene Chloride	ug/L	1.0	20.0	119%
Methyl tert-Butyl Ether	ug/L	4.0	20.0	47%
Trans-1,2-dichloroethylene	ug/L	0.5	20.0	110%
1,1-Dichloroethane	ug/L	0.5	20.0	107%
Methyl ethyl ketone	ug/L	25.0	200	91%
2,2-Dichloropropane	ug/L	0.5	20.0	130%
cis-1,2-Dichloroethylene	ug/L	0.5	20.0	100%
Chloroform	ug/L	0.5	20.0	120%
Bromochloromethane	ug/L	1.0	20.0	116%
Tetrahydrofuran	ug/L	20.0	200	81%
1,1,1-Trichloroethane	ug/L	0.5	20.0	111%
1,1-Dichloropropene	ug/L	1.0	20.0	99%
Carbon Tetrachloride	ug/L	0.5	20.0	110%
Benzene	ug/L	0.5	20.0	107%
1,2-Dichloroethane	ug/L	0.5	20.0	99%
1,2-Dichloropropane	ug/L	0.5	20.0	110%
1,1,2-Trichloroethylene	ug/L	0.5	20.0	106%
Dibromomethane	ug/L	1.5	20.0	102%
Bromodichloromethane	ug/L	0.5	20.0	106%
Methyl isobutyl ketone	ug/L	8.0	40.0	97%
cis-1,3-Dichloro-1-propene	ug/L	0.5	20.0	110%
Toluene	ug/L	0.8	20.0	109%
trans-1,3-Dichloro-1-propene	ug/L	0.5	20.0	113%
1,1,2-Trichloroethane	ug/L	0.5	20.0	103%
1,3-Dichloropropane	ug/L	0.8	20.0	98%
1,1,2,2-Tetrachloroethylene	ug/L	1.0	20.0	117%
Dibromochloromethane	ug/L	1.0	20.0	118%
1,2-Dibromoethane	ug/L	4.0	20.0	116%

REPORT OF LABORATORY ANALYSIS

Mr. Don Johnston
Page 17

QUALITY CONTROL DATA

December 14, 1995
PACE Project Number: 951129514

Client Reference: 96447

MDH 465D: VOLATILE ORGANICS IN A SOLID
Batch: 10 78147
Samples: 10 0354503, 10 0354511, 10 0354538, 10 0354546

LABORATORY CONTROL SAMPLE:

Parameter	Units	PRL	Reference Value	Recv
Chlorobenzene	ug/L	0.8	20.0	114%
1,1,1,2-Tetrachloroethane	ug/L	0.5	20.0	103%
Ethyl benzene	ug/L	0.8	20.0	102%
m-Xylene	ug/L	0.8	20.0	107%
p-Xylene	ug/L	0.8	20.0	99%
o-Xylene	ug/L	0.8	20.0	101%
Styrene	ug/L	0.8	20.0	102%
Bromoform	ug/L	1.0	20.0	102%
Cumene	ug/L	1.0	20.0	103%
1,1,2,2-Tetrachloroethane	ug/L	1.0	20.0	99%
1,2,3-Trichloropropane	ug/L	4.0	20.0	110%
Bromobenzene	ug/L	1.0	20.0	111%
n-Propylbenzene	ug/L	1.0	20.0	102%
2-Chlorotoluene	ug/L	1.0	20.0	104%
1,3,5-Trimethylbenzene	ug/L	0.8	20.0	108%
4-Chlorotoluene	ug/L	1.5	20.0	101%
tert-Butylbenzene	ug/L	0.8	20.0	94%
1,2,4-Trimethylbenzene	ug/L	0.8	20.0	99%
sec-Butylbenzene	ug/L	1.0	20.0	103%
p-Cymene	ug/L	1.0	20.0	96%
1,3-Dichlorobenzene	ug/L	1.0	20.0	106%
1,4-Dichlorobenzene	ug/L	1.0	20.0	106%
n-Butylbenzene	ug/L	1.2	20.0	97%
1,2-Dichlorobenzene	ug/L	1.0	20.0	97%
1,2-Dibromo-3-chloropropane	ug/L	0.8	20.0	131%
1,2,4-Trichlorobenzene	ug/L	1.2	20.0	132%
Hexachlorobutadiene	ug/L	2.0	20.0	101%
Naphthalene	ug/L	1.5	20.0	115%
1,2,3-Trichlorobenzene	ug/L	1.5	20.0	94%

Client Reference: 96447

MDH 465D: VOLATILE ORGANICS IN A SOLID
Batch: 10 78247
Samples: 10 0354520

METHOD BLANK:

Parameter	Units	PRL	Method Blank
Date Analyzed			7DEC95
Dichlorodifluoromethane	ug/kg	76	ND
Chloromethane	ug/kg	76	ND
Vinyl Chloride	ug/kg	76	ND
Bromomethane	ug/kg	76	ND
Chloroethane	ug/kg	48	ND
Dichlorofluoromethane	ug/kg	48	ND
Trichlorofluoromethane	ug/kg	25	ND
Ethyl ether	ug/kg	250	ND
1,1,2-Trichlorotrifluoroethane	ug/kg	48	ND
Acetone	ug/kg	2000	ND
1,1-Dichloroethylene	ug/kg	25	ND
Allyl chloride	ug/kg	100	ND
Methylene Chloride	ug/kg	48	ND
Methyl tert-Butyl Ether	ug/kg	200	ND
trans-1,2-Dichloroethylene	ug/kg	25	ND
1,1-Dichloroethane	ug/kg	25	ND
Methyl ethyl ketone	ug/kg	1200	ND
2,2-Dichloropropane	ug/kg	25	ND
cis-1,2-Dichloroethylene	ug/kg	25	ND
Chloroform	ug/kg	25	ND
Bromochloromethane	ug/kg	48	ND
Tetrahydrofuran	ug/kg	1000	ND
1,1,1-Trichloroethane	ug/kg	25	ND
1,1-Dichloropropene	ug/kg	48	ND
Carbon Tetrachloride	ug/kg	25	ND
Benzene	ug/kg	25	ND
1,2-Dichloroethane	ug/kg	25	ND
1,2-Dichloropropane	ug/kg	25	ND
1,1,2-Trichloroethylene	ug/kg	25	ND
Dibromomethane	ug/kg	76	ND
Bromodichloromethane	ug/kg	25	ND

Client Reference: 96447

MDH 465D: VOLATILE ORGANICS IN A SOLID
Batch: 10 78247
Samples: 10 0354520

METHOD BLANK:

Parameter	Units	PRL	Method Blank
Methyl isobutyl ketone	ug/kg	400	ND
cis-1,3-Dichloro-1-propene	ug/kg	25	ND
Toluene	ug/kg	40	ND
trans-1,3-Dichloro-1-propene	ug/kg	25	ND
1,1,2-Trichloroethane	ug/kg	25	ND
1,3-Dichloropropane	ug/kg	40	ND
1,1,2,2-Tetrachloroethylene	ug/kg	48	ND
Dibromochloromethane	ug/kg	48	ND
1,2-Dibromoethane	ug/kg	200	ND
Chlorobenzene	ug/kg	40	ND
1,1,1,2-Tetrachloroethane	ug/kg	25	ND
Ethyl benzene	ug/kg	40	ND
m-Xylene	ug/kg	40	ND
p-Xylene	ug/kg	40	ND
o-Xylene	ug/kg	40	ND
Styrene	ug/kg	40	ND
Bromoform	ug/kg	48	ND
Cumene	ug/kg	48	ND
1,1,2,2-Tetrachloroethylane	ug/kg	48	ND
1,2,3-Trichloropropane	ug/kg	200	ND
Bromobenzene	ug/kg	48	ND
n-Propylbenzene	ug/kg	48	ND
2-Chlorotoluene	ug/kg	48	ND
1,3,5-Trimethylbenzene	ug/kg	40	ND
4-Chlorotoluene	ug/kg	76	ND
tert-Butylbenzene	ug/kg	40	ND
1,2,4-Trimethylbenzene	ug/kg	40	ND
sec-Butylbenzene	ug/kg	48	ND
p-Cymene	ug/kg	48	ND
1,3-Dichlorobenzene	ug/kg	48	ND
1,4-Dichlorobenzene	ug/kg	48	ND
n-Butylbenzene	ug/kg	60	ND

REPORT OF LABORATORY ANALYSIS

Mr. Don Johnston
Page 20

QUALITY CONTROL DATA

December 14, 1995
PACE Project Number: 951129514

Client Reference: 96447

MDH 465D: VOLATILE ORGANICS IN A SOLID
Batch: 10 78247
Samples: 10 0354520

METHOD BLANK:

Parameter	Units	PRL	Method Blank
1,2-Dichlorobenzene	ug/kg	48	ND
1,2-Dibromo-3-chloropropane	ug/kg	40	ND
1,2,4-Trichlorobenzene	ug/kg	60	ND
Hexachlorobutadiene	ug/kg	100	ND
Naphthalene	ug/kg	60	ND
1,2,3-Trichlorobenzene	ug/kg	60	ND
Fluorobenzene (Surrogate)	%		102

SPIKE AND SPIKE DUPLICATE:

Parameter	Units	PRL	100353655	Spike	Spike Recv	Spike Dupl Recv	RPD
Dichlorofluoromethane	ug/kg	120.	ND DS				
Dichlorofluoromethane	ug/kg	48		1000	83%	88%	6%
1,1-Dichloroethylene	ug/kg	62.5	ND DS				
1,1-Dichloroethylene	ug/kg	25		1000	85%	83%	2%
Methylene Chloride	ug/kg	120.	250 PC DS				
Methylene Chloride	ug/kg	48		1000	58%	56%	4%
trans-1,2-Dichloroethylene	ug/kg	62.5	ND DS				
trans-1,2-Dichloroethylene	ug/kg	25		1000	83%	79%	5%
1,1-Dichloroethane	ug/kg	62.5	ND DS				
1,1-Dichloroethane	ug/kg	25		1000	89%	86%	3%
Methyl ethyl ketone	ug/kg	3000	ND DS				
Methyl ethyl ketone	ug/kg	1200		10000	70%	64%	9%
2,2-Dichloropropane	ug/kg	62.5	ND DS				
2,2-Dichloropropane	ug/kg	25		1000	88%	85%	3%
Chloroform	ug/kg	62.5	ND DS				
Chloroform	ug/kg	25		1000	89%	88%	1%
Tetrahydrofuran	ug/kg	2500	ND DS				
Tetrahydrofuran	ug/kg	1000		10000	67%	69%	3%
1,1,1-Trichloroethane	ug/kg	62.5	ND DS				
1,1,1-Trichloroethane	ug/kg	25		1000	90%	92%	2%

pace INCORPORATED
ENVIRONMENTAL LABORATORIES

REPORT OF LABORATORY ANALYSIS

QUALITY CONTROL DATA

December 14, 1995
PACE Project Number: 951129514

Client Reference: 96447

MDH 465D: VOLATILE ORGANICS IN A SOLID
Batch: 10 78247
Samples: 10 0354520

SPIKE AND SPIKE DUPLICATE:

Parameter	Units	PRL	100353655	Spike	Spike Recv	Spike Dupl Recv	RPD
Carbon Tetrachloride	ug/kg	62.5	ND DS				
Carbon Tetrachloride	ug/kg	25		1000	93%	90%	3%
Benzene	ug/kg	62.5	ND DS				
Benzene	ug/kg	25		1000	86%	93%	8%
1,1,2-Trichloroethylene	ug/kg	62.5	ND DS				
1,1,2-Trichloroethylene	ug/kg	25		1000	92%	93%	1%
Bromodichloromethane	ug/kg	62.5	ND DS				
Bromodichloromethane	ug/kg	25		1000	89%	89%	0%
Methyl isobutyl ketone	ug/kg	1000.	ND DS				
cis-1,3-Dichloro-1-propene	ug/kg	62.5	ND DS				
cis-1,3-Dichloro-1-propene	ug/kg	25		1000	84%	86%	2%
Toluene	ug/kg	100.	ND DS				
Toluene	ug/kg	40		1000	83%	89%	7%
trans-1,3-Dichloro-1-propene	ug/kg	62.5	ND DS				
trans-1,3-Dichloro-1-propene	ug/kg	25		1000	84%	89%	6%
1,3-Dichloropropane	ug/kg	100.	ND DS				
Chlorobenzene	ug/kg	100.	ND DS				
Chlorobenzene	ug/kg	40		1000	101%	101%	0%
m-Xylene	ug/kg	100.	ND DS				
m-Xylene	ug/kg	40		1000	82%	89%	8%
Styrene	ug/kg	100.	ND DS				
Styrene	ug/kg	40		1000	84%	92%	9%
Bromoform	ug/kg	120.	ND DS				
Bromoform	ug/kg	48		1000	82%	87%	6%
Cumene	ug/kg	120.	ND DS				
Cumene	ug/kg	48		1000	86%	118%	31%
n-Propylbenzene	ug/kg	120.	ND DS				
n-Propylbenzene	ug/kg	48		1000	84%	93%	10%
1,3,5-Trimethylbenzene	ug/kg	100.	ND DS				
1,3,5-Trimethylbenzene	ug/kg	40		1000	70%	85%	19%
4-Chlorotoluene	ug/kg	190.	ND DS				

1710 Douglas Drive North
Minneapolis, MN 55422
TEL: 612-544-5543
FAX: 612-525-3377

An Equal Opportunity Employer

QUALITY CONTROL DATA

December 14, 1995
PACE Project Number: 951129514

Client Reference: 96447

MDH 465D: VOLATILE ORGANICS IN A SOLID
Batch: 10 78247
Samples: 10 0354520

SPIKE AND SPIKE DUPLICATE:

Parameter	Units	PRL	100353655	Spike	Spike Recv	Spike Dupl Recv	RPD
4-Chlorotoluene	ug/kg	76		1000	91%	92%	1%
tert-Butylbenzene	ug/kg	100.	ND DS				
tert-Butylbenzene	ug/kg	40		1000	85%	95%	11%
p-Cymene	ug/kg	120.	ND DS				
p-Cymene	ug/kg	48		1000	82%	92%	11%
1,4-Dichlorobenzene	ug/kg	120.	ND DS				
1,4-Dichlorobenzene	ug/kg	48		1000	88%	94%	7%
1,2-Dichlorobenzene	ug/kg	120.	ND DS				
1,2-Dichlorobenzene	ug/kg	48		1000	96%	93%	3%
Hexachlorobutadiene	ug/kg	250	ND DS				
Hexachlorobutadiene	ug/kg	100		1000	67%	78%	15%
Naphthalene	ug/kg	150.	ND DS				
Naphthalene	ug/kg	60		1000	70%	83%	17%
1,2,3-Trichlorobenzene	ug/kg	150.	ND DS				
1,2,3-Trichlorobenzene	ug/kg	60		1000	68%	87%	25%

LABORATORY CONTROL SAMPLE:

Parameter	Units	PRL	Reference Value	Recv
Dichlorodifluoromethane	ug/L	1.5	20.0	72%
Chloromethane	ug/L	1.5	20.0	102%
Vinyl Chloride	ug/L	1.5	20.0	101%
Bromomethane	ug/L	1.5	20.0	94%
Chloroethane	ug/L	1.0	20.0	104%
Dichlorofluoromethane	ug/L	1.0	20.0	88%
Trichlorofluoromethane	ug/L	0.5	20.0	98%
Ethyl ether	ug/L	5.0	20.0	91%
1,1,2-Trichlorotrifluoroethane	ug/L	1.0	20.0	99%
Acetone	ug/L	40.0	200	95%
1,1-Dichloroethylene	ug/L	0.5	20.0	89%
Allyl chloride	ug/L	2.0	20.0	104%
Methylene Chloride	ug/L	1.0	20.0	87%

Client Reference: 96447

MDH 465D: VOLATILE ORGANICS IN A SOLID
Batch: 10 78247
Samples: 10 0354520

LABORATORY CONTROL SAMPLE:

Parameter	Units	PRL	Reference Value	Recv
Methyl tert-Butyl Ether	ug/L	4.0	20.0	90%
Trans-1,2-dichloroethylene	ug/L	0.5	20.0	88%
1,1-Dichloroethane	ug/L	0.5	20.0	95%
Methyl ethyl ketone	ug/L	25.0	200	73%
2,2-Dichloropropane	ug/L	0.5	20.0	96%
cis-1,2-Dichloroethylene	ug/L	0.5	20.0	107%
Chloroform	ug/L	0.5	20.0	92%
Bromochloromethane	ug/L	1.0	20.0	96%
Tetrahydrofuran	ug/L	20.0	200	74%
1,1,1-Trichloroethane	ug/L	0.5	20.0	95%
1,1-Dichloropropene	ug/L	1.0	20.0	113%
Carbon Tetrachloride	ug/L	0.5	20.0	95%
Benzene	ug/L	0.5	20.0	89%
1,2-Dichloroethane	ug/L	0.5	20.0	128%
1,2-Dichloropropane	ug/L	0.5	20.0	117%
1,1,2-Trichloroethylene	ug/L	0.5	20.0	93%
Dibromomethane	ug/L	1.5	20.0	113%
Bromodichloromethane	ug/L	0.5	20.0	93%
cis-1,3-Dichloro-1-propene	ug/L	0.5	20.0	91%
Toluene	ug/L	0.8	20.0	91%
trans-1,3-Dichloro-1-propene	ug/L	0.5	20.0	91%
1,1,2-Trichloroethane	ug/L	0.5	20.0	101%
1,3-Dichloropropane	ug/L	0.8	20.0	97%
1,1,2,2-Tetrachloroethylene	ug/L	1.0	20.0	95%
Dibromochloromethane	ug/L	1.0	20.0	94%
1,2-Dibromoethane	ug/L	4.0	20.0	104%
Chlorobenzene	ug/L	0.8	20.0	89%
1,1,1,2-Tetrachloroethane	ug/L	0.5	20.0	99%
Ethyl benzene	ug/L	0.8	20.0	95%
m-Xylene	ug/L	0.8	20.0	88%
p-Xylene	ug/L	0.8	20.0	97%
o-Xylene	ug/L	0.8	20.0	98%

Client Reference: 96447

MDH 465D: VOLATILE ORGANICS IN A SOLID
Batch: 10 78247
Samples: 10 0354520

LABORATORY CONTROL SAMPLE:

Parameter	Units	PRL	Reference Value	Recv
Styrene	ug/L	0.8	20.0	90%
Bromoform	ug/L	1.0	20.0	93%
Cumene	ug/L	1.0	20.0	95%
1,1,2,2-Tetrachloroethane	ug/L	1.0	20.0	111%
1,2,3-Trichloropropane	ug/L	4.0	20.0	114%
Bromobenzene	ug/L	1.0	20.0	110%
n-Propylbenzene	ug/L	1.0	20.0	91%
2-Chlorotoluene	ug/L	1.0	20.0	134%
1,3,5-Trimethylbenzene	ug/L	0.8	20.0	88%
4-Chlorotoluene	ug/L	1.5	20.0	87%
tert-Butylbenzene	ug/L	0.8	20.0	89%
1,2,4-Trimethylbenzene	ug/L	0.8	20.0	99%
sec-Butylbenzene	ug/L	1.0	20.0	98%
p-Cymene	ug/L	1.0	20.0	90%
1,3-Dichlorobenzene	ug/L	1.0	20.0	146%
1,4-Dichlorobenzene	ug/L	1.0	20.0	91%
n-Butylbenzene	ug/L	1.2	20.0	101%
1,2-Dichlorobenzene	ug/L	1.0	20.0	86%
1,2-Dibromo-3-chloropropane	ug/L	0.8	20.0	122%
1,2,4-Trichlorobenzene	ug/L	1.2	20.0	105%
Hexachlorobutadiene	ug/L	2.0	20.0	91%
Naphthalene	ug/L	1.5	20.0	91%
1,2,3-Trichlorobenzene	ug/L	1.5	20.0	103%

FOOTNOTES
for pages 9 through 24

December 14, 1995
PACE Project Number: 951129514

Client Reference: 96447

DS	Concentration found on diluted sample.
ND	Not detected at or above the PRL.
PC	Possible laboratory contaminant.
PRL	PACE Reporting Limit
RPD	Relative Percent Difference
(1)	Spiked sample recovery is not within control limits of 75-115%. The RPD was also outside of the limit of 20%.

1710 Douglas Drive North
Minneapolis, MN 55422
TEL: 612-544-5543
FAX: 612-525-3377

An Equal Opportunity Employer

STS CHAIN OF CUSTODY RECORD

№ 11992 RECORD NO. _____ THROUGH _____

Contact Person: Don Johnston
Phone No.: 559 1900
Project No.: 96447 PO No.: _____
STS Office: Plymouth Mn.

SPECIAL HANDLING REQUEST
- ☐ RUSH
- ☐ VERBAL
- ☐ OTHER

Laboratory: PACE
Contact Person: Mary Jo Conky
Phone No.: 544-5543
Results Due: 10-14 days

Sample I.D.	Date	Time	Grab	Composite	No. of Containers	Sample Type (Water, soil, air, sludge, etc.)	Preservation Y	Preservation N	Field Data PID/FID Ambient	Field Data PID/FID Sample	Field Data PH	Field Data Spec. Cond.	Analysis Request	Comments on Sample (Include Major Contaminants)
B-1 S#10	11/28	1315	X		3	Soil							DRO VOC moisture	35450.3
B-2 S#6	11-28	1505	X		3	Soil							DRO VOC moisture	35451.1
B-2 S#9	11-28	1545	X		3	Soil							DRO VOC moisture	35452.0
B-3 S#1	11-29	0755	X		3	soil							DRO VOC moisture	35453.8
B-3 S#7	11-29	0915	X		3	Soil							DRO VOC moisture	35454.6

Collected by: Don J	Date 11-29-95	Time 1451	Delivery by: Don Johnston	Date 11-29-95	Time
Received by: [signature]	Date 11.29.95	Time 1451	Relinquished by:	Date	Time
Received by:	Date	Time	Relinquished by:	Date	Time
Received by:	Date	Time	Relinquished by:	Date	Time
Received for lab by:	Date	Time	Relinquished by:	Date	Time

Laboratory Comments Only: Seals Intact Upon Receipt ☐ Yes ☐ No ☐ N/A

Final disposition:

Comments (Weather Conditions, Precautions, Hazards):

Distribution: Original and Green – Laboratory Yellow – As needed Pink – Transporter Goldenrod – STS Project File

Instruction to Laboratory: Forward completed original to STS with analytical results. Retain green copy.

2.1

11/90 FORM 038

STS CONSULTANTS, LTD.

DRILLING & SAMPLING SYMBOLS:

SS : Split Spoon-1 3/8" I.D., 2" O.D. Unless otherwise noted
ST : Shelby Tube-2" O.D., Unless otherwise noted
PA : Power Auger
DB : Diamond Bit-NX, BX, AX
AS : Auger Sample
JS : Jar Sample
VS : Vane Shear
OS : Osterberg Sampler-3" Shelby Tube
HS : Hollow Stem Auger
WS : Wash Sample
FT : Fish Tail
RB : Rock Bit
BS : Bulk Sample
PM : Pressuremeter Test, In-Situ
GS : Giddings Sampler

Standard "N" Penetration: Blows per foot of a 140 pound hammer falling 30 inches on a 2 inch O.D. split spoon sampler, except where otherwise noted.

WATER LEVEL MEASUREMENT SYMBOLS:

WL : Water Level
WS : While Sampling
WD : While Drilling
AB : After Boring
WCI : Wet Cave In
DCI : Dry Cave In
BCR : Before Casing Removal
ACR : After Casing Removal

Water levels indicated on the boring logs are the levels measured in the boring at the times indicated. In pervious soils, the indicated elevations are considered reliable groundwater levels. In impervious soils, the accurate determination of groundwater elevations may not be possible, even after several days of observations; additional evidence of groundwater elevations must be sought.

GRADATION DESCRIPTION & TERMINOLOGY:

Coarse Grained or Granular Soils have more than 50% of their dry weight retained on a #200 sieve; they are described as: boulders, cobbles, gravel or sand. Fine Grained soils have less than 50% of their dry weight retained on a #200 sieve; they are described as: clays or clayey silts if they are cohesive and silts if they are non-cohesive. In addition to gradation, granular soils are defined on the basis of their relative in-place density and fine grained soils on the basis of their strength or consistency and their plasticity.

Major Component Of Sample	Size Range
Boulders	Over 8 in. (200 mm)
Cobbles	8 inches to 3 inches (200 mm to 75 mm)
Gravel	3 inches to #4 sieve (75 mm to 4.76 mm)
Sand	#4 to #200 sieve (4.76 mm to 0.074 mm)
Silt	Passing #200 sieve (0.074 mm to 0.005 mm)
Clay	Smaller than 0.005 mm

Description Of Components Also Present in Sample	Percent Of Dry Weight
Trace	1-9
Little	10-19
Some	20-34
And	35-50

CONSISTENCY OF COHESIVE SOILS:

Unconfined Compressive Strength, Qu, tsf	Consistency
0.25	Very Soft
0.25-0.49	Soft
0.50-0.99	Medium (Firm)
1.00-1.99	Stiff
2.00-3.99	Very Stiff
4.00-8.00	Hard
>8.00	Very Hard

RELATIVE DENSITY OF GRANULAR SOILS:

N-Blows per ft.	Relative Density
0-3	Very Loose
4-9	Loose
10-29	Medium Dense
30-49	Dense
50-80	Very Dense
>80	Extremely Dense

STS Soil Classification System

UNIFIED SOIL CLASSIFICATION

Major Divisions			Group symbols	Typical names	Laboratory classification criteria	
Coarse-grained soils (More than half of material is *larger* than No. 200 sieve size)	Gravels (More than half of coarse fraction larger than No. 4 sieve size)	Clean gravels (Little or no fines)	GW	Well-grades gravels, gravel-sand mixtures, little or no fines	$C_u = \frac{D_{60}}{D_{10}}$ greater than 6; $C_c = \frac{(D_{10})^2}{D_{10} \times D_{60}}$ between 1 and 3	
			GP	Poorly graded gravels, gravel-sand mixtures, little or no fines	Not meeting all gradation requirements for GW	
		Gravels with fines (Appreciable amount of fines)	GM d u	Silty gravels, gravel-sand-silt mixtures	Atterberg limits below "A" line or P.I. less than 4	Above "A" line with P.I. between 4 and 7 are *borderline* cases requiring use of dual symbols
			GC	Clayey gravels, gravel-sand-clay mixtures	Atterberg limits above "A" line with P.I. greater than 7	
	Sands (More than half of coarse fraction is smaller than No. 4 sieve size)	Clean sands (Little or no fines)	SW	Well-graded sands, gravelly sands, little or no fines	$C_u = \frac{D_{60}}{D_{10}}$ greater than 4; $C_c = \frac{(D_{10})^2}{D_{10} \times D_{60}}$ between 1 and 3	
			SP	Poorly graded sands, gravelly sands, little or no fines	Not meeting all gradation requirements for SW	
		Sands with fines (Appreciable amount of fines)	SM d u	Silty sands, sand-silt mixtures	Atterberg limits below "A" line or P.I. less than 4	Limits plotting in hatched zone with P.I. between 4 and 7 are *borderline* cases requiring use of dual symbols
			SC	Clayey sands, sand-clay mixtures	Atterberg limits above "A" line with P.I. greater than 7	
Fine-grained soils (More than half of material is *smaller* than No. 200 sieve)	Silts and clays (Liquid limit less than 50)		ML	Inorganic silts and very fine sands, rock flour, silty or clayey fine sands or clayey silts with slight plasticity		
			CL	Inorganic clays of low to medium plasticity, gravelly clays, sandy clays, silty clays, lean clays		
			OL	Organic silts and organic silty clays of low plasticity		
	Silts and clays (Liquid limit greater than 50)		MH	Inorganic silts, micaceous or diatomaceous fine sandy or silty soils, elastic silts		
			CH	Inorganic clays of high plasticity, fat clays		
			OH	Organic clays of medium to high plasticity, organic silts		
	Highly organic soils		Pt	Peat and other highly organic soils		

Determine percentages of sand and gravel from grain-size curve. Depending on percentage of fines (fraction smaller than No. 200 sieve size), coarse-grained soils are classified as follows:

- Less than 5 per cent ..... GW, GP, SW, SP
- More than 12 per cent ..... GM, GC, SM, SC
- 5 to 12 per cent ..... *Borderline* cases requiring dual symbols

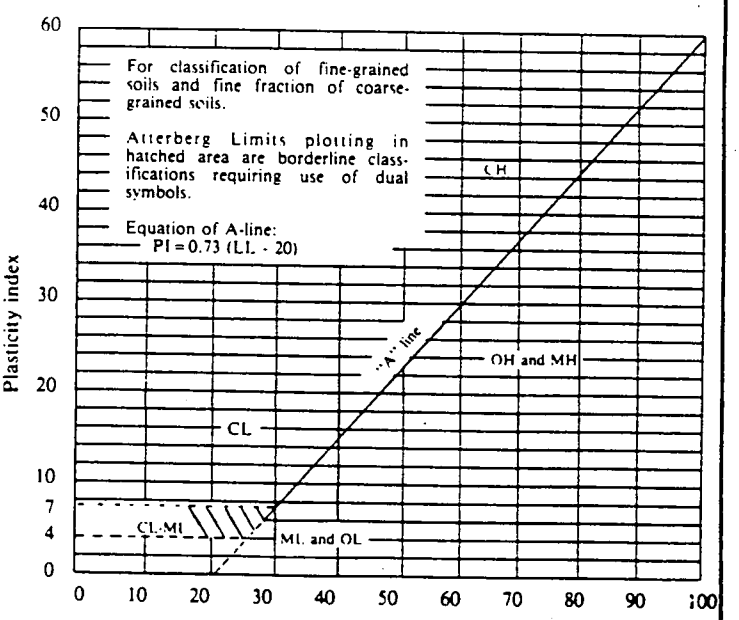

Liquid Limit Plasticity Chart

SUBSURFACE EXPLORATION PROCEDURES

Hand-Auger Drilling (HA)

In this procedure, a sampling device is driven into the soil by repeated blows of a sledge hammer. When the sampler is driven to the desired sample depth, the soil sample is retrieved. The hole is then advanced by manually turning the hand auger until the next sampling depth increment is reached. The hand auger drilling between sampling intervals also helps to clean and enlarge the bore hole in preparation for obtaining the next sample.

Power Auger Drilling (PA)

In this type of drilling procedure, continuous flight augers are used to advance the bore holes. They are turned and hydraulically advanced by a truck or track-mounted unit as site accessiblility dictates. In auger drilling, casing and drilling mud are not required to maintain open bore holes.

Hollow Stem Auger Drilling (HS)

In this drilling procedure, continuous flight augers having an open stem are used to advance the bore holes. The open stem allows the sampling tool to be used without removing the augers from the bore hole. Hollow stem augers thus provide support to the sides of the bore hole during the sampling operations.

Rotary Drilling (RB)

In employing rotary drilling methods, various cutting bits are used to advance the bore holes. In this process, surface casing and/or drilling fluids are used to maintain open bore holes.

Diamond Core Drilling (DB)

Diamond core drilling is used to sample cemented formations. In this procedure, a double tube (triple tube) core barrel with a diamond bit cuts an annular space around a cylindrical prism of the material sampled. The sample is retrieved by a catcher just above the bit. Samples recovered by this procedure are placed in sturdy containers in sequential order.

SAMPLING PROCEDURES

Auger Sampling (AS)

In this procedure, soil samples are collected from cuttings off of the auger flights as they are removed from the ground. Such samples provide a general indication of subsurface conditions; however, they do not provide undisturbed samples, nor do they provide samples from discrete depths.

Split-Barrel Sampling (SS) — (ASTM Standard D-1586-84)

In the split-barrel sampling procedure, a 2 inch O.D., split barrel sampler is driven into the soil a distance of 18 inches by means of a 140 pound hammer falling 30 inches. The value of the Standard Penetration Resistance is obtained by counting the number of blows of the hammer over the final 12 inches of driving. This value provides a qualitative indication of the in-place relative density of cohesionless soils. The indication is qualitative only, however, since many factors can significantly affect the Standard Penetration Resistance Value, and direct correlation of results obtained by drill crews using different rigs, drilling procedures, and hammer-rod-spoon assemblies should not be made. A portion of the recovered sample is placed in a sample jar and returned to the laboratory for further analysis and testing.

Shelby Tube Sampling Procedure (ST) — (ASTM Standard D-1587-83)

In the shelby tube sampling procedure, a thin-walled steel seamless tube with a sharp cutting edge is pushed hydraulically into the soil and a relatively undisturbed sample is obtained. This procedure is generally employed in cohesive soils. The tubes are carefully handled in the field to avoid excessive disturbance and are returned to the laboratory for extrusion and further analysis and testing.

Giddings Sampler (GS)

This type of sampling device consists of 5-ft. sections of thin-wall tubing which are capable of retrieving continuous columns of soil in 5-ft. maximum increments. Because of a continuous slot in the sampling tubes, the sampler allows field determination of stratification boundaries and containerization of soil samples from any sampling depth within the 5-ft. interval.

LABORATORY PROCEDURES

Water Content (Wc)

The water content of a soil is the ratio of the weight of water in a given soil mass to the weight of the dry soil. Water content is generally expressed as a percentage.

Hand Penetrometer (Qp)

In the hand penetrometer test, the unconfined compressive strength of a soil is determined, to a maximum value of 4.5 tons per square foot (tsf), by measuring the resistance of the soil sample to penetration by a small, spring-calibrated cylinder. The hand penetrometer test has been carefully correlated with unconfined compressive strength tests, and thereby provides a useful and a relatively simple testing procedure in which soil strength can be quickly and easily estimated.

Unconfined Compression Tests (Qu)

In the unconfined compression strength test, an undisturbed prism of soil is loaded axially until failure or until 20% strain has been reached, whichever occurs first.

Dry Density (γ_D)

The dry density is the quantity used as a measure of the amount of solids in a unit volume of soil aggregate. Use of this value is often made when measuring the degree of compaction of a soil.

Classification of Samples

In conjunction with the sample testing program, all soil samples are examined in our laboratory and classified on the basis of their texture and plasticity in accordance with the Unified Soil Classification System (USCS). The soil descriptions on the boring logs are in conformance with this system and the estimated group symbols according to this system are included in parentheses following the soil descriptions on the boring logs. Included on a separate sheet entitled "General Notes" is a brief explanation of this system of soil classification.

STS Standard Boring Log Procedures

STS CONSULTANTS, LTD.

In the process of obtaining and testing samples and preparing this report, standard procedures are followed regarding field logs, laboratory data sheets and samples.

Field logs are prepared during performance of the drilling and sampling operations and are intended to essentially portray field occurrences, sampling locations and procedures.

Samples obtained in the field are frequently subjected to additional testing and reclassification in the laboratory by more experienced soil engineers, and differences between the field logs and the final logs may exist.

The engineer preparing the report reviews the field and laboratory logs, classifications and test data, and using judgement and experience in interpreting this data, may make further changes.

Samples taken in the field, some of which are later subjected to laboratory tests, are retained in our laboratory for sixty days and are then destroyed unless special disposition is requested by our client. Samples retained over a long period of time, even in sealed jars, are subject to moisture loss which changes the apparent strength of cohesive soil, generally increasing the strength from what was originally encountered in the field. Since they are then no longer representative of the moisture conditions initially encountered, an observation of these samples should recognize this factor.

It is common practice in the geotechnical engineering profession that field logs and laboratory data sheets not be included in engineering reports, because they do not represent the engineer's final opinions as to appropriate descriptions for conditions encountered in the exploration and testing work. On the other hand, we are aware that perhaps certain contractors and subcontractors submitting bids or proposals on work might have an interest in studying these documents before submitting a bid or proposal. For this reason, the field logs are retained in our office for review by all contractors submitting a bid or proposal. We would welcome the opportunity to explain any changes that have been and typically are made in the preparation of our final reports, to the contractor or subcontractors, before the firm submits its bid or proposal, and to describe how the information was obtained to the extent the contractor or subcontractor wishes. Results of laboratory tests are generally shown on the boring logs or are described in the text of the report, as appropriate.

The descriptive terms and symbols used on the logs are described on the attached sheet, entitled: "General Notes".

AMERICAN SOCIETY FOR TESTING AND MATERIALS

Standard Method for PENETRATION TEST AND SPLIT-BARREL SAMPLING OF SOILS[1]

This standard is issued under the fixed designation D 1586; the number immediately following the designation indicates the year of original adoption or, in the case of revision, the year of the last revision. A number in parentheses indicates the year of last reapproval. A superscript epsilon (ε) indicates an editorial change since the last revision or reapproval.

This method has been approved for use by agencies of the Department of Defense and for listing in the DOD Index of Specifications and Standards.

1. Scope

1.1 This method describes the procedure, generally known as the Standard Penetration Test (SPT), for driving a split-barrel sampler to obtain a representative soil sample and a measure of the resistance of the soil to penetration of the sampler.

1.2 This standard may involve hazardous materials, operations, and equipment. This standard does not purport to address all of the safety problems associated with its use. It is the responsibility of whoever uses this standard to consult and establish appropriate safety and health practices and determine the applicability of regulatory limitations prior to use. For a specific precautionary statement, see 5.4.1.

1.3 The values stated in inch-pound units are to be regarded as the standard.

2. Applicable Documents

2.1 ASTM Standards:

D2487 Test Method for Classification of Soils for Engineering Purposes[2]

D2488 Practice for Description and Identification of Soils (Visual-Manual Procedure)[2]

D4220 Practice for Preserving and Transporting Soil Samples[2]

3. Descriptions of Terms Specific to This Standard

3.1 anvil—that portion of the drive-weight assembly which the hammer strikes and through which the hammer energy passes into the drill rods.

3.2 cathead—the rotating drum or windlass in the rope-cathead lift system around which the operator wraps a rope to lift and drop the hammer by successively tightening and loosening the rope turns around the drum.

3.3 drill rods—rods used to transmit downward force and torque to the drill bit while drilling a borehole.

3.4 drive-weight assembly—a device consisting of the hammer, hammer fall guide, the anvil, and any hammer drop system.

3.5 hammer—that portion of the drive-weight assembly consisting of the 140 ± 2 lb (63.5 ± 1 kg) impact weight which is successively lifted and dropped to provide the energy that accomplishes the sampling and penetration.

3.6 hammer drop system—that portion of the drive-weight assembly by which the operator accomplishes the lifting and dropping of the hammer to produce the blow.

3.7 hammer fall guide—that part of the drive-weight assembly used to guide the fall of the hammer.

3.8 N-value—the blowcount representation of the penetration resistance of the soil. The N-value, reported in blows per foot, equals the sum of the number of blows required to drive the sampler over the depth interval of 6 to 18 in. (150 to 450 mm) (see 7.3).

3.9 ΔN—the number of blows obtained from each of the 6-in. (150-mm) intervals of sampler penetration (see 7.3).

3.10 number of rope turns—the total contact angle between the rope and the cathead at the beginning of the operator's rope slackening to drop the hammer, divided by 360° (see Fig. 1).

3.11 sampling rods—rods that connect the drive-weight assembly to the sampler. Drill rods are often used for this purpose.

3.12 SPT—abbreviation for Standard Penetration Test, a term by which engineers commonly refer to this method.

4. Significance and Use

4.1 This method provides a soil sample for identification purposes and for laboratory tests appropriate for soil obtained from a sampler that may produce large shear strain disturbance in the sample.

4.2 This method is used extensively in a great variety of geotechnical exploration projects. Many local correlations and widely published correlations which relate SPT blowcount, or N-value, and the engineering behavior of earthworks and foundation are available.

[1]This method is under the jurisdiction of ASTM Committee D-18 on Soil and Rock and is the direct responsibility of subcommittee D18.02 on Sampling and Related Field Testing for Soil Investigations.

Current edition approved Sept. 11, 1984. Published November 1984. Originally published as D1586—58T. Last previous edition D1586—67 (1974).

[2]Annual Book of ASTM Standards, Vol 04.08.

5. Apparatus

5.1 Drilling Equipment—Any drilling equipment that provides at the time of sampling a suitably clean open hole before insertion of the sampler and ensures that the penetration test is performed on undisturbed soil shall be acceptable. The following pieces of equipment have proven to be suitable for advancing a borehole in some subsurface conditions.

5.1.1 Drag, Chopping, and Fishtail Bits, less than 6.5 in. (162 mm) and greater than 2.2 in. (56 mm) in diameter may be used in conjunction with open-hole rotary drilling or casing-advancement drilling methods. To avoid disturbance of the underlying soil, bottom discharge bits are not permitted; only side discharging bits are permitted.

5.1.2 Roller-Cone Bits, less than 6.5 in. (162 mm) and greater than 2.2 in. (56 mm) in diameter may be used in conjunction with open-hole rotary drilling or casing-advancement drilling methods if the drilling fluid discharge is deflected.

5.1.3 Hollow-Stem Continuous Flight Augers, with or without a center bit assembly, may be used to drill the boring. The inside diameter of the hollow-stem augers shall be less than 6.5 in. (162 mm) and greater than 2.2 in. (56 mm).

5.1.4 Solid, Continuous Flight, Bucket and Hand Augers, less than 6.5 in. (162 mm) and greater than 2.2 in. (56 mm) in diameter may be used if the soil on the side of the boring does not cave onto the sampler or sampling rods during sampling.

5.2 Sampling Rods—Flush-joint steel drill rods shall be used to connect the split-barrel sampler to the drive-weight assembly. The sampling rod shall have a stiffness (moment of inertia) equal to or greater than that of parallel wall "A" rod (a steel rod which has an outside diameter of 1⅝ in. (41.2 mm) and an inside diameter of 1⅛ in. (28.5 mm).

NOTE 1—Recent research and comparative testing indicates the type rod used, with stiffness ranging from "A" size rod to "N" size rod, will usually have a negligible effect on the N-values to depths of at least 100 ft (30 m).

5.3 Split-Barrel Sampler—The sampler shall be constructed with the dimensions indicated in Fig. 2. The driving shoe shall be of hardened steel and shall be replaced or repaired when it becomes dented or distorted. The use of liners to produce a constant inside diameter of 1⅜ in. (35 mm) is permitted, but shall be noted on the penetration record if used. The use of a sample retainer basket is permitted, and should also be noted on the penetration record if used.

NOTE 2—Both theory and available test data suggest that N-values may increase between 10 to 30% when liners are used.

5.4 Drive-Weight Assembly:

5.4.1 Hammer and Anvil—The hammer shall weigh 140 ± 2 lb (63.5 ± 1 kg) and shall be a solid rigid metallic mass. The hammer shall strike the anvil and make steel on steel contact when it is dropped. A hammer fall guide permitting a free fall shall be used. Hammers used with the cathead and rope method shall have an unimpeded overlift capacity of at least 4 in. (100 mm). For safety reasons, the use of a hammer assembly with an internal anvil is encouraged.

NOTE 3—It is suggested that the hammer fall guide be permanently marked to enable the operator or inspector to judge the hammer drop height.

5.4.2 Hammer Drop System—Rope-cathead, trip, semi-automatic, or automatic hammer drop systems may be used, providing the lifting apparatus will not cause penetration of the sampler while re-engaging and lifting the hammer.

5.5 Accessory Equipment—Accessories such as labels, sample containers, data sheets, and groundwater level measuring devices shall be provided in accordance with the requirements of the project and other ASTM standards.

6. Drilling Procedure

6.1 The boring shall be advanced incrementally to permit intermittent or continuous sampling. Test intervals and locations are normally stipulated by the project engineer or geologist. Typically, the intervals selected are 5 ft (1.5 m) or less in homogeneous strata with test and sampling locations at every change of strata.

6.2 Any drilling procedure that provides a suitably clean and stable hole before insertion of the sampler and assures that the penetration test is performed on essentially undisturbed soil shall be acceptable. Each of the following procedures have proven to be acceptable for some subsurface conditions. The subsurface conditions anticipated should be considered when selecting the drilling method to be used.

6.2.1 Open-hole rotary drilling method.

6.2.2 Continuous flight hollow-stem auger method.

6.2.3 Wash boring method.

6.2.4 Continuous flight solid auger method.

6.3 Several drilling methods produce unacceptable borings. The process of jetting through an open tube sampler and then sampling when the desired depth is reached shall not be permitted. The continuous flight solid auger method shall not be used for advancing the boring below a water table or below the upper confining bed of a confined non-cohesive stratum that is under artesian pressure. Casing may not be advanced below the sampling elevation prior to sampling. Advancing a boring with bottom discharge bits is not permissible. It is not permissible to advance the boring for subsequent insertion of the sampler solely by means of previous sampling with the SPT sampler.

6.4 The drilling fluid level within the boring or hollow-stem augers shall be maintained at or above the in situ groundwater level at all times during drilling, removal of drill rods, and sampling.

7. Sampling and Testing Procedure

7.1 After the boring has been advanced to the desired sampling elevation and excessive cuttings have been removed, prepare for the test with the following sequence of operations.

7.1.1 Attach the split-barrel sampler to the sampling rods and lower into borehole. Do not allow the sampler to drop onto the soil to be sampled.

7.1.2 Position the hammer above and attach the anvil to the top of the sampling rods. This may be done before the sampling rods and sampler are lowered into the borehole.

7.1.3 Rest the dead weight of the sampler, rods, anvil, and drive weight on the bottom of the boring and apply a seating blow. If excessive cuttings are encountered at the bottom of the boring, remove the sampler and sampling rods from the boring and remove the cuttings.

7.1.4 Mark the drill rods in three successive 6-in. (0.15-m) increments

so that the advance of the sampler under the impact of the hammer can be easily observed for each 6-in. (0.15-m) increment.

7.2 Drive the sampler with blows from the 140-lb (63.5-kg) hammer and count the number of blows applied in each 6-in. (0.15-m) increment until one of the following occurs:

7.2.1 A total of 50 blows have been applied during any one of the three 6-in. (0.15-m) increments described in 7.1.4.

7.2.2 A total of 100 blows have been applied.

7.2.3 There is no observed advance of the sampler during the application of 10 successive blows of the hammer.

7.2.4 The sampler is advanced the complete 18 in. (0.45 m) without the limiting blow counts occurring as described in 7.2.1, 7.2.2, or 7.2.3.

7.3 Record the number of blows required to effect each 6 in. (0.15m) of penetration or fraction thereof. The first 6 in. is considered to be a seating drive. The sum of the number of blows required for the second and third 6 in. of penetration is termed the "standard penetration resistance", or the "N-value". If the sampler is driven less than 18 in. (0.45 m), as permitted in 7.2.1, 7.2.2, or 7.2.3, the number of blows per each complete 6-in. (0.15-m) increment and per each partial increment shall be recorded on the boring log. For partial increments, the depth of penetration shall be reported to the nearest 1 in. (25 mm), in addition to the number of blows. If the sampler advances below the bottom of the boring under the static weight of the drill rods or the weight of the drill rods plus the static weight of the hammer, this information should be noted on the boring log.

7.4 The raising and dropping of the 140-lb (63.5-kg) hammer shall be accomplished using either of the following two methods:

7.4.1 By using a trip, automatic, or semi-automatic hammer drop system which lifts the 140-lb (63.5-kg) hammer and allows it to drop 30 ± 1.0 in. (0.76 m ± 25 mm) unimpeded.

7.4.2 By using a cathead to pull a rope attached to the hammer. When the cathead and rope method is used the system and operation shall conform to the following:

7.4.2.1 The cathead shall be essentially free of rust, oil, or grease and have a diameter in the range of 6 to 10 in. (150 to 250 mm).

7.4.2.2 The cathead should be operated at a minimum speed of rotation of 100 RPM, or the approximate speed of rotation shall be reported on the boring log.

7.4.2.3 No more than 2¼ rope turns on the cathead may be used during the performance of the penetration test, as shown in Fig. 1.

NOTE 4—The operator should generally use either 1¾ of 2¼ rope turns, depending upon whether or not the rope comes off the top (1¾ turns) or the bottom (2¼ turns) of the cathead. It is generally known and accepted that 2¾ or more rope turns considerably impedes the fall of the hammer and should not be used to perform the test. The cathead rope should be maintained in a relatively dry, clean, and unfrayed condition.

7.4.2.4 For each hammer blow, a 30-in. (0.76-m) lift and drop shall be employed by the operator. The operation of pulling and throwing the rope shall be performed rhythmically without holding the rope at the top of the stroke.

7.5 Bring the sampler to the surface and open. Record the percent recovery or length of sample recovered. Describe the soil samples recovered as to composition, color, stratification, and condition, then place one or more representative portions of the sample into sealable moisture-proof containers (jars) without ramming or distorting any apparent stratification. Seal each container to prevent evaporation of soil moisture. Affix labels to the containers bearing job designation, boring number, sample depth, and the blow count per 6-in. (0.15-m) increment. Protect the samples against extreme temperature changes. If there is a soil change within the sampler, make a jar for each stratum and note its location in the sampler barrel.

8. Report

8.1 Drilling information shall be recorded in the field and shall include the following:

8.1.1 Name and location of job,

8.1.2 Names of crew,

8.1.3 Type and make of drilling machine,

8.1.4 Weather conditions,

8.1.5 Date and time of start and finish of boring,

8.1.6 Boring number and location (station and coordinates, if available and applicable),

8.1.7 Surface elevation, if available,

8.1.8 Method of advancing and cleaning the boring,

8.1.9 Method of keeping boring open,

8.1.10 Depth of water surface and drilling depth at the time of a noted loss of drilling fluid, and time and date when reading or notation was made,

8.1.11 Location of strata changes,

8.1.12 Size of casing, depth of cased portion of boring,

8.1.13 Equipment and method of driving sampler,

8.1.14 Type of sampler and length and inside diameter of barrel (note use of liners),

8.1.15 Size, type, and section length of the sampling rods, and

8.1.16 Remarks.

8.2 Data obtained for each sample shall be recorded in the field and shall include the following:

8.2.1 Sample depth and, if utilized, the sample number,

8.2.2 Description of soil,

8.2.3 Strata changes within sample,

8.2.4 Sampler penetration and recovery lengths, and

8.2.5 Number of blows per 6-in. (0.15-m) or partial increment.

9. Precision and Bias

9.1 Variations in N-values of 100% or more have been observed when using different standard penetration test apparatus and drillers for adjacent borings in the same soil formation. Current opinion, based on field experience, indicates that when using the same apparatus and driller, N-values in the same soil can be reproduced with a coefficient of variation of about 10%.

9.2 The use of faulty equipment, such as an extremely massive or damaged anvil, a rusty cathead, a low speed cathead, an old, oily rope, or massive or poorly lubricated rope sheaves can significantly contribute to differences in N-values obtained between operator-drill rig systems.

9.3 The variability in N-values produced by different drill rigs and operators may be reduced by measuring that part of the hammer energy delivered into the drill rods from the sampler and adjusting N on the basis of comparative energies. A method for energy measurement and N-value adjustment is currently under development.

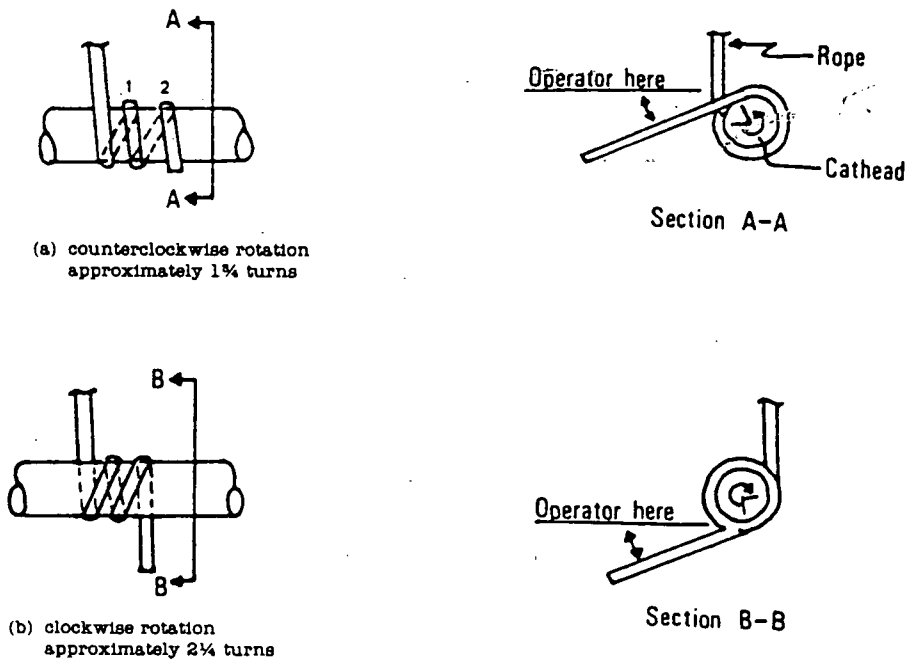

(a) counterclockwise rotation approximately 1¾ turns

(b) clockwise rotation approximately 2¼ turns

FIG. 1 Definitions of the Number of Rope Turns and the Angle for (a) Counterclockwise Rotation and (b) Clockwise Rotation of the Cathead

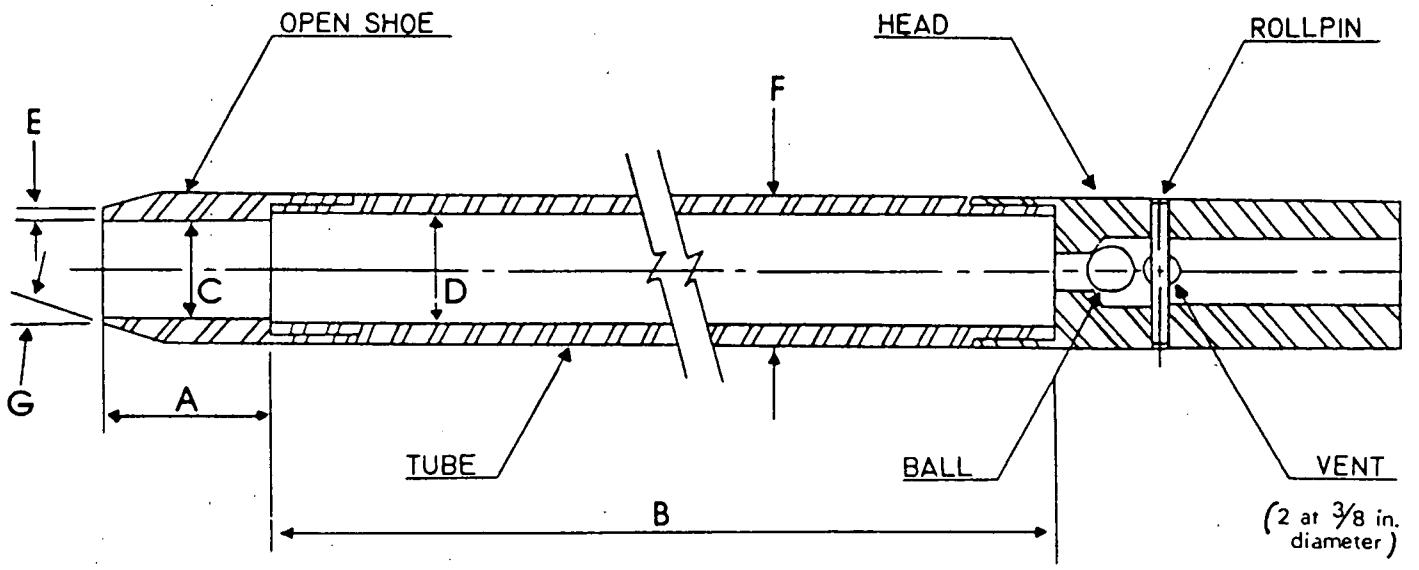

A = 1.0 to 2.0 in. (25 to 50 mm)
B = 18.0 to 30.0 in. (0.457 to 0.762 m)
C = 1.375 ± 0.005 in. (34.93 ± 0.13 mm)
D = 1.50 ± 0.05 – 0.00 in. (38.1 ± 1.3 – 0.0 mm)
E = 0.10 ± 0.02 in. (2.54 ± 0.25 mm)
F = 2.00 ± 0.05 – 0.00 in. (50.8 ± 1.3 – 0.0 mm)
G = 16.0° to 23.0°

The 1½ in. (38 mm) inside diameter split barrel may be used with a 16-gage wall thickness split liner. The penetrating end of the drive shoe may be slightly rounded. Metal or plastic retainers may be used to retain soil samples.

FIG. 2 Split-Barrel Sampler

The American Society for Testing and Materials takes no position respecting the validity of any patent rights asserted in connection with any item mentioned in this standard. Users of this standard are expressly advised that determination of the validity of any such patent rights, and the risk of infringement of such rights, are entirely their own responsibility.

This standard is subject to revision at any time by the responsible technical committee and must be reviewed every five years and if not revised, either reapproved or withdrawn. Your comments are invited either for revision of this standard or for additional standards and should be addressed to ASTM Headquarters. Your comments will receive careful consideration at a meeting of the responsible technical committee, which you may attend. If you feel that your comments have not received a fair hearing you should make your views known to the ASTM Committee on Standards, 1916 Race St., Philadelphia, Pa. 19103.