N91192.AR.000641
NIROP FRIDLEY
5090.3a

Remedial Action Work Plan

Naval Industrial Reserve Ordnance Plant

Fridley, Minnesota

Southern Division
Naval Facilities Engineering Command

Contract Number N62467-94-D-0888

Contract Task Order 0057

January 2003

Remedial Action Work Plan

Volume I
Remedial Action Monitoring Plan

Naval Industrial Reserve Ordnance Plant
Fridley, Minnesota

Southern Division
Naval Facilities Engineering Command
Contract Number N62467-94-D-0888

Contract Task Order 0057

January 2003

039909/P

REMEDIAL ACTION MONITORING PLAN - VOLUME I

NAVAL INDUSTRIAL RESERVE ORDNANCE PLANT
FRIDLEY, MINNESOTA

COMPREHENSIVE LONG-TERM
ENVIRONMENTAL ACTION NAVY (CLEAN) CONTRACT

Submitted to:
Southern Division
Naval Facilities Engineering Command
2155 Eagle Drive
North Charleston, South Carolina 29406

Submitted by:
Tetra Tech NUS, Inc.
661 Andersen Drive
Foster Plaza 7
Pittsburgh, Pennsylvania 15220

CONTRACT NUMBER N62467-94-D-0888
CONTRACT TASK ORDER 0057

JANUARY 2003

PREPARED UNDER THE SUPERVISION OF:

MARK SLADIC, P.E.
TASK ORDER MANAGER
TETRA TECH NUS, INC.
PITTSBURGH, PENNSYLVANIA

APPROVED FOR SUBMITTAL BY:

DEBBIE WROBLEWSKI
PROGRAM MANAGER
TETRA TECH NUS, INC.
PITTSBURGH, PENNSYLVANIA

TABLE OF CONTENTS

SECTION **PAGE NO.**

ACRONYMS ..... **vi**

1.0 INTRODUCTION **1**
1.1 BACKGROUND 1-1
1.2 PURPOSE AND SCOPE 1-3
1.3 QUALITY ASSURANCE 1-4
1.4 CONTENTS OF RAMP 1-5
1.5 UPDATES 1-5

2.0 SITE CHARACTERISTICS **2-1**
2.1 SITE LOCATION AND DESCRIPTION 2-1
2.2 SITE HYDROGEOLOGY AND GROUNDWATER FLOW 2-1
2.3 GROUNDWATER QUALITY 2-3

3.0 GROUNDWATER EXTRACTION AND TREATMENT FACILITIES **1**
3.1 GROUNDWATER EXTRACTION 1
3.2 GROUNDWATER TREATMENT SYSTEM 1

4.0 GROUNDWATER MONITORING **4-1**
4.1 OBJECTIVES 4-1
4.2 MONITORING LOCATIONS AND FREQUENCIES 4-3
4.3 SAMPLING PROTOCOL 4-12
4.3.1 Preparation 4-12
4.3.2 Preliminary Field Work 4-22
4.3.3 Sample Collection 4-32
4.3.4 Investigation Derived Waste Handling 4-36
4.3.5 Documentation 4-36
4.3.6 Sample Preservation, Handling, and Transportation 4-38
4.4 DATA REDUCTION AND VALIDATION 4-40
4.4.1 Data Reduction and Validation 4-40
4.5 REPORTING AND RECORD KEEPING 4-41
4.5.1 Periodic Monitoring Reports and Progress Reports 4-41
4.5.2 Annual Monitoring Report 4-41
4.5.3 Retention of Records 4-43

5.0 NPDES/SDS EFFLUENT MONITORING **5-1**
5.1 OBJECTIVES 5-1
5.2 MONITORING LOCATIONS AND FREQUENCIES 5-1
5.3 SAMPLING PROTOCOL 5-3
5.3.1 Preparation 5-3
5.3.2 Sample Collection and Field Tests 5-6
5.3.3 Documentation 5-8
5.3.4 Sample Preservation, Handling, and Transport 5-9
5.4 DATA REDUCTION AND VALIDATION 5-9

TABLE OF CONTENTS (Continued)

SECTION **PAGE NO.**

5.5 REPORTING AND RECORD KEEPING 5-9
5.5.1 Periodic Monitoring Reports and Progress Reports 5-9
5.5.2 Annual Monitoring Report 5-9
5.5.3 Monthly Reports 5-9
5.5.4 Special Discharge Reports 5-10
5.5.5 Performance Curves 5-11
5.5.6 Records Retention 5-11

REFERENCES **R-1**

APPENDICES

A NPDES/SDS PERMIT AND MCES INDUSTRIAL DISCHARGE PERMIT
B WELL SELECTION MEETING NOTES
C MPCA RISK BASED SITE CHARACTERIZATION AND SAMPLING GUIDANCE
D FIELD FORMS

TABLES

NUMBER		PAGE NO.
4-1	Groundwater Chemicals and Target Cleanup Levels	4-2
4-2	Site-Specific Allowable Air Emission Rates and Groundwater Concentrations	4-4
4-3	Monitoring Wells for Monitoring Groundwater Chemical Characteristics	4-7
4-4	Summary of Monitoring Well Types for Groundwater Monitoring	4-9
4-5	Summary of Groundwater Sampling Network Defined in March 2002 Well Selection Meeting	4-13
4-6	Practical Quantitation Limits - Groundwater Parameters	4-17
4-7	Bottleware, Preservation, and Holding Time Requirements, Groundwater Samples	4-18
4-8	Sampling Equipment Decontamination Procedures	4-20
4-9	Groundwater Wells from Which Water Level Measurements Will Be Taken	4-23
4-10	Monitoring and Extraction Well Construction Data	4-27
4-11	Summary of Groundwater Monitoring Program QA/QC Sampling	4-34
5-1	Effluent Limitations and Monitoring Requirements, Outfall 020	5-2
5-2	Practical Quantitation Limits - Effluent Parameters	5-4
5-3	Bottleware, Preservation, and Holding Time Requirements, Effluent Samples	5-5
5-4	Summary of Effluent Monitoring Program	5-7

FIGURES

NUMBER		PAGE NO.
2-1	Site Location Map	2-2
3-1	Site Plan	3-2
3-2	Groundwater Extraction and Treatment System	3-3
4-1	Monitoring Well Location Map	4-5

ACRONYMS

ACL	Alternative concentration limit
ACP	Anoka County Park
AER	Air emission rate
AMR	Annual Monitoring Report
COC	Chain-of-custody
CTO	Contract Task Order
DQO	Data Quality Objective
FS	Feasibility Study
FFA	Federal Facility Agreement
GWTF	Groundwater Treatment Facility
IDW	Investigation derived waste
ISCST3	Industrial Source Complex Short-Term, Version 3
MCES	Metropolitan Council Environmental Services
MCL	Maximum Contaminant Level
MGD	Million Gallons per Day
MPCA	Minnesota Pollution Control Agency
MS	Matrix spike
MSD	Matrix spike duplicate
NIROP	Navil Industrial Reserve Ordnance Plant
NPDES	National Pollutant Discharge Elimination System
NTU	Nephelometric Turbidity Unit
O&M	Operations and Maintenance
OU	Operable Unit
PCJ	Prairie du Chien Dolomite and Jordan Sandstone
PPE	Personal protective equipment
PQL	Practical quantitation limit
PVC	Polyvinyl chloride
QA	Quality assurance
QC	Quality Control
QAPP	Quality Assurance Project Plan
RAB	Restoration Advisory Board
RAMP	Remedial Action Monitoring Plan
RAWP	Remedial Action Work Plan
RI	Remedial Investigation

ROD	Record of Decision
SDS	State Disposal System
SDWA	Safe Drinking Water Act
SOUTHNAVFACENGCOM	Southern Division, Naval Facilities Engineering Command
TCE	Trichloroethene
TRC	Technical Review Committee
TtNUS	TetraTech NUS, Inc.
UDLP	United Defense L.P.
USEPA	United States Environmental Protection Agency
U.S. Navy	United States Navy
VOC	Volatile organic compound

1.0 INTRODUCTION

1.1 BACKGROUND

This Remedial Action Monitoring Plan (RAMP) was prepared by Tetra Tech NUS, Inc. (TtNUS) for the Southern Division, Naval Facilities Engineering Command (SOUTHNAVFACENGCOM) under Contract Number N62467-94-D-0888, Contract Task Order (CTO) 0057. This RAMP addresses monitoring requirements associated with the groundwater extraction and treatment system at the Naval Industrial Reserve Ordnance Plant (NIROP) in Fridley, Minnesota. The extraction and treatment system includes Phases I and II of a remedial action plan for groundwater [Operable Unit (OU) 1], as defined in the Record of Decision (ROD) for Groundwater Remediation (USEPA, 1990).

The ROD was signed in September 1990 by representatives of the United States Navy (Navy), the U.S. Environmental Protection Agency (USEPA) Region 5, and the Minnesota Pollution Control Agency (MPCA). The remedial action specified in the ROD called for the hydraulic containment and recovery of all future migration of contaminated groundwater from the NIROP and the recovery, to the extent feasible, of contamination downgradient of the NIROP. The selected remedy included the installation and operation of groundwater containment and extraction wells with a two-phased plan for disposal of groundwater from the well system. Contaminated groundwater located off-site and downgradient of the NIROP in Anoka County Park is currently being allowed to naturally dissipate, but this approach is currently under review and evaluation.

Under Phase I, groundwater from the extraction system was discharged to an existing sanitary sewer system for treatment at a local wastewater treatment facility. Under Phase II, a groundwater treatment system was constructed and is being operated to provide longer-term groundwater treatment. Treated groundwater from the on-site treatment facility is discharged to the Mississippi River through a National Pollutant Discharge Elimination System (NPDES)/State Disposal System (SDS) permitted outfall (Outfall 020) (MPCA, 1996).

The groundwater extraction system and pretreatment facilities began operating in September 1992. Monitoring of these facilities and associated monitoring wells has been performed since startup according to the procedures described in the Remedial Action Work Plan for Groundwater Remediation (RMT, 1995a) that was approved by the USEPA and the MPCA. This document was developed to update and replace the 1995 document.

As required by the ROD, an evaluation of the effectiveness of the groundwater extraction system in achieving hydraulic containment of contaminated groundwater from the site during the initial 90-day operating period was submitted to the USEPA and the MPCA in December 1992 (RMT, 1992). The evaluation concluded that additional groundwater extraction well(s) would be needed to achieve effective hydraulic containment. A work plan for upgrading the original extraction system was prepared (RMT, 1995b) and approved by the USEPA and the MPCA. Two additional extraction wells were installed and placed into operation in June 1995. At that time, the combined groundwater extraction system consisted of six wells.

The concentrations of trichloroethene (TCE) and other volatile organic compounds (VOCs) in the combined discharge from the extraction wells decreased significantly since startup in 1992. The concentrations decreased to levels where pretreatment of groundwater was no longer needed to comply with the Metropolitan Council Environmental Services (MCES) discharge limits. With the approval of the MCES, the pretreatment system was shut down in March 1995, and the combined discharge from the extraction wells was transferred directly to the sanitary sewer.

Construction of the Phase II on-site groundwater treatment facility began in September 1997 and was completed and the facility began operation in December 1998. The discharge to the MCES sanitary sewer system has been stopped, and treated groundwater from this facility is now discharged to the Mississippi River through Outfall 020 (NPDES/SDS Permit MN0000710).

A five-year review of the selected remedy for groundwater outlined in the ROD was signed in September 1998 (USEPA, 1998). The five-year review recommended the continued operation, maintenance, and upgrade (if necessary) of the groundwater containment and recovery system, with eventual on-site treatment and discharge of treated groundwater in accordance with the NPDES/SDS permit. The Navy achieved on-site treatment with the construction and operation of the on-site treatment facility. Resolution upgrades to the containment system and other concerns from the five-year review are listed below:

- Modifications to the extraction system were designed and implemented to address capture of contamination at the NIROP Fridley compliance boundary, thereby prohibiting further migration of contaminants into Anoka County Park. In June 2001, the extraction well system was upgraded to more effectively capture and contain contamination at the NIROP Fridley compliance boundary (TtNUS, 2002). The system upgrade included the installation of four new extraction wells (AT-7, AT-8, AT-9, and AT-10) and the shutdown and abandonment of three wells (AT-1, AT-2, and AT-4). Therefore, there are a total of 7 extraction wells operating under the current remedial system.

- Data gaps that existed in the monitoring network were closed with the installation of additional groundwater monitoring wells in 1995.

- Investigation of the Anoka County Park indicated that contamination west of East River Road was not attributable to any source contamination located in Anoka County Park.

- The MPCA conducted a surface water assessment using the new groundwater sampling information and groundwater modeling information to determine if surface water standards and criteria were exceeded.

- The five-year review also recommended that the Navy determine what could be done to significantly reduce residual groundwater contamination in Anoka County Park. The Navy was also to determine if a response action would enhance the effectiveness of the selected remedy on residual groundwater in Anoka County Park. The selected action, enhancement of in-situ bioremediation using vegetable oil, is currently being performed by the Navy in cooperation with the USEPA and MPCA.

1.2 PURPOSE AND SCOPE

The purpose of this RAMP is to fulfill the requirements of the Federal Facility Agreement (FFA) for the NIROP dated March 1991 and signed by the USEPA Region 5, the Navy, and the MPCA.

The scope of this RAMP addresses the monitoring requirements associated with the selected remedy in the ROD for groundwater remediation. These monitoring requirements include the following: evaluation of the overall groundwater extraction and treatment system, evaluation of the potential for contamination from upgradient sources, compliance with NPDES/SDS permit requirements, and evaluation of impacts to the Mississippi River from the indirect discharge of contaminated groundwater. The RAMP does not address monitoring requirements related to operation and maintenance of the groundwater treatment facilities. An Operations and Maintenance (O&M) Manual (Morrison Knudsen Corporation, 1999) for the groundwater treatment facility contains information about sampling and analysis requirements for the sanitary sewer discharge and air emissions.

The following documents and data form the basis for the scope of the monitoring program approach and details presented in the RAMP:

- ROD for Groundwater Remediation, Naval Industrial Reserve Ordnance Plant, Fridley, Minnesota (USEPA, 1990).

- Five Year Review Report (USEPA, 1998).

- Remedial Investigation Report for the Remedial Investigation/Feasibility Study at the Naval Industrial Reserve Ordnance Plant, Fridley, Minnesota (RMT, 1987).

- Addendum to the Remedial Investigation Report for the Remedial Investigation/Feasibility Study at the Naval Industrial Reserve Ordnance Plant, Fridley, Minnesota (RMT, 1988a).

- Feasibility Study Report for the Remedial Investigation/Feasibility Study at the Naval Industrial Reserve Ordnance Plant, Fridley, Minnesota (RMT, 1988b).

- Addendum to the Feasibility Study Report for the Remedial Investigation/Feasibility Study at the Naval Industrial Reserve Ordnance Plant, Fridley, Minnesota (RMT, 1988c).

- NPDES/SDS Permit MN0000710 (MPCA, 1996).

- Annual Monitoring Report (AMR) (submitted annually, TtNUS).

- Various correspondence and telephone discussions among the MPCA, USEPA, Navy, United Defense L. P. (UDLP), and TtNUS.

1.3 QUALITY ASSURANCE

The USEPA requires that all environmental monitoring and measurement efforts mandated or supported by the USEPA participate in a centrally managed quality assurance (QA) program. Any party generating data under this program has the responsibility to implement minimum procedures to ensure that the precision, accuracy, completeness, comparability, and representativeness of its data are known and documented. To ensure that the responsibility is met uniformly, each party must adhere to a written Quality Assurance Project Plan (QAPP) covering each project it is to perform.

A QAPP that presents the organization, objectives, functional activities, and specific QA and quality control (QC) activities associated with this RAMP is provided in Volume II of the Remedial Action Work Plan (RAWP).

1.4 CONTENTS OF RAMP

The contents of this RAMP are as follows:

- Section 1.0 Introduction
- Section 2.0 Site Characteristics
- Section 3.0 Groundwater Extraction and Treatment Facilities
- Section 4.0 Groundwater Monitoring
- Section 5.0 NPDES/SDS Effluent Monitoring
- Appendix A NPDES/SDS Permit and MCES Industrial Discharge Permit
- Appendix B Well Selection Meeting Notes
- Appendix C MPCA Risk Based Site Characterization and Sampling Guidance
- Appendix D Field Forms

The information provided in Sections 4.0 and 5.0 and Appendix A address field sampling procedures.

1.5 UPDATES

The Navy intends to incorporate modifications to the proposed list of monitoring wells, the frequency of sampling, and the analyte list for the next year to be reported in each year's AMR. The MPCA and USEPA will review the proposals, and once agreement is reached, this RAMP will be modified to support the modifications. The RAMP may be amended by letter report until this becomes unmanageable, at which time a revised RAMP will be issued.

2.0 SITE CHARACTERISTICS

This section contains a brief description of general site characteristics. Additional descriptions can be found in the AMRs and the Remedial Investigation (RI) and Feasibility Study (FS) Reports.

2.1 SITE LOCATION AND DESCRIPTION

The NIROP Fridley is located in the northern portion of the Minneapolis/St. Paul Metropolitan Area within the city limits of Fridley, Minnesota (Figure 2-1). Advanced naval weapons systems are designed and manufactured at the NIROP. The northern portion of the facility is government-owned and operated by a private contractor (UDLP – Armament Systems Division), and the remainder of the facility is owned and operated independently by UDLP. The site owner and occupants are likely to change in the future. The government-owned portion of the facility constitutes what is referred to as the NIROP Fridley site.

The site comprises approximately 82.6 acres, most of which is covered with buildings or pavement. The site is situated on a broad, flat glacial drift terrace that is approximately 30 feet above and 2000 feet east of the Mississippi River.

Adjacent land use is commercial and light industrial to the north; industrial to the south, recreational to the west, and commercial/light industrial (including railroads) to the east.

Natural resource use in the area consists of recreational activities in the Anoka County Riverfront Regional Park (Anoka County Park) that is directly across East River Road from the NIROP site and adjacent to the Mississippi River. Use of these resources does not result in access to the NIROP Fridley site, which is highly restricted by the Department of Defense. No federal or state freshwater wetlands are located within 1 mile of the site. No critical habitats of endangered species or national wildlife refuges have been identified near the site.

2.2 SITE HYDROGEOLOGY AND GROUNDWATER FLOW

The NIROP Fridley site is underlain by an unconsolidated sand and gravel aquifer that overlies a bedrock aquifer. The water table is 20 to 25 feet below the ground surface in the unconsolidated aquifer, which has a saturated thickness of approximately 100 feet. A discontinuous clayey glacial till layer is present at various depths below the ground surface. The underlying bedrock consists of Prairie du Chien Dolomite and Jordan Sandstone, which are referred to as the PCJ aquifer. The basal unit of the St. Peter Sandstone that overlies the PCJ aquifer across the northern portion of the site acts as a confining layer

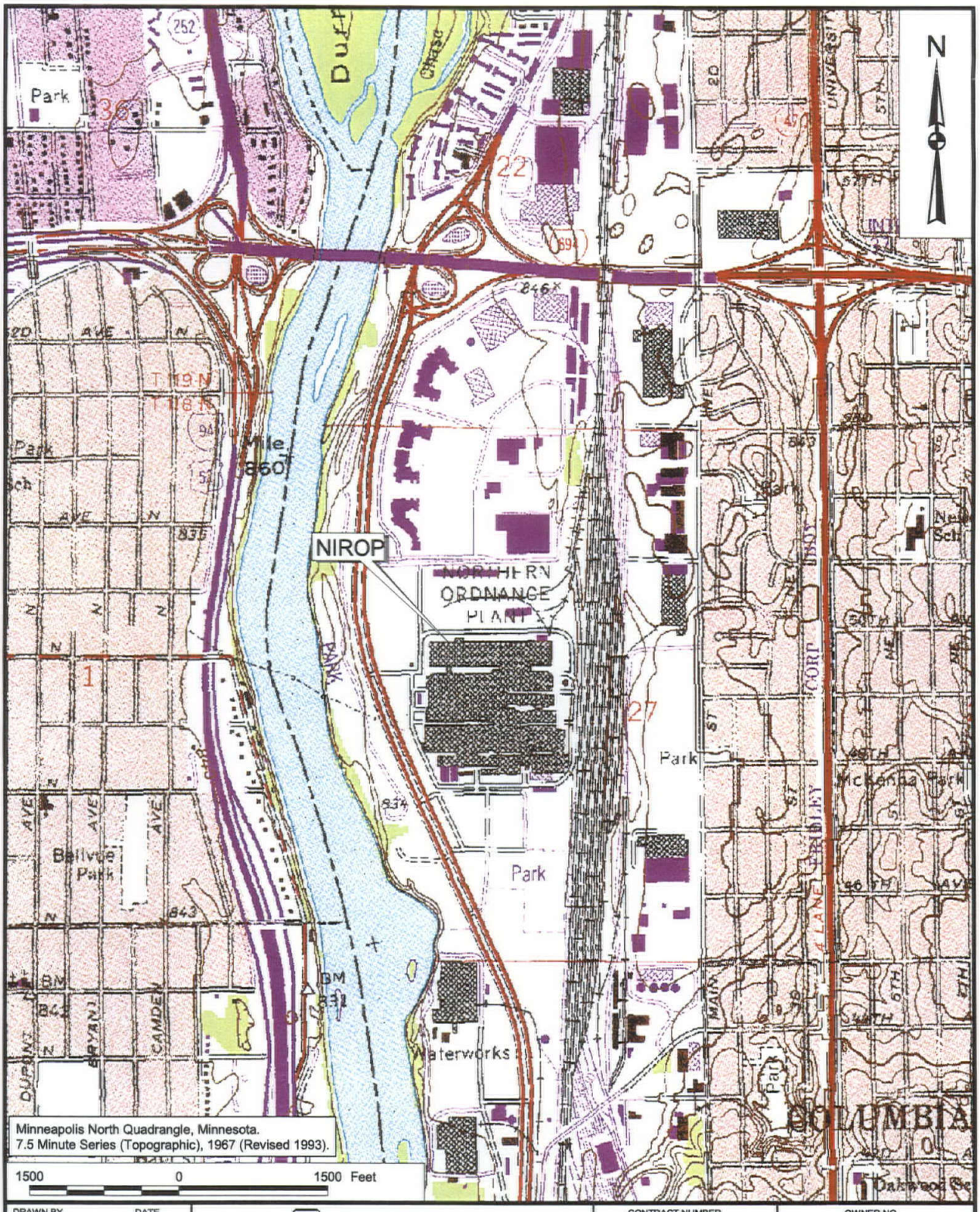

DRAWN BY K. PEILA DATE 9/24/02	Tetra Tech NUS, Inc.	CONTRACT NUMBER 7842	OWNER NO. 0057
CHECKED BY J. MAGILSON DATE 9/24/02	SITE LOCATION MAP NIROP FRIDLEY, MINNESOTA	APPROVED BY M. SLADIC	DATE 9/24/02
COST/SCHEDULE-AREA		APPROVED BY —	DATE —
SCALE AS NOTED		DRAWING NO. FIGURE 2-1	REV 0

P:\GIS\NIROP_FRIDLEY\7842_AMR2000.APR\FACILITY MAP LAYOUT 9/24/02 KMP

where it is present. Where it is absent, the unconsolidated aquifer is hydraulically connected to the PCJ aquifer. Groundwater flow in the unconsolidated aquifer is generally from the northeast to the southwest across the site toward the Mississippi River. The groundwater containment and extraction system has altered the groundwater flow characteristics.

The City of Fridley owns and operates a backup potable water supply well (Fridley Well No. 13) that draws water from the PCJ aquifer immediately north of the NIROP site. The total population served by groundwater within a 3-mile radius of the site is approximately 29,000 residents. Three on-site production wells that are completed in the PCJ aquifer are no longer in use. There are no groundwater supply wells or downgradient users between the Facility and the Mississippi River.

The City of Minneapolis Water Treatment Plant intake, which draws water from the Mississippi River, is located less than 1 mile downstream from the NIROP site. Approximately 500,000 people are served by this treatment plant.

2.3 GROUNDWATER QUALITY

Groundwater in portions of the unconsolidated aquifer beneath the NIROP Fridley contains VOCs. The VOCs detected in 2001 are listed as follows (from greatest frequency detected to least detected): TCE, cis-1,2-dichloroethene (cis-1,2-DCE), trans-1,2-dichloroethene (trans-1,2-DCE), tetrachloroethene (PCE), 1,1-dichloroethane (1,1-DCA), vinyl chloride, 1,1-dichloroethene (1,1-DCE), 1,1,1-trichloroethane (1,1,1-TCA), and 1,2-dichloroethane (1,2-DCA). The concentrations vary widely across the site; however, TCE has been detected more frequently and at higher concentrations than any other VOC. TCE is therefore assumed to be the primary indicator parameter for monitoring contamination and the remedial system at NIROP Fridley (TtNUS, 2002). Results of laboratory analyses of samples collected from groundwater monitoring and extraction wells during each calendar year are presented and discussed in the AMR that is issued each year.

3.0 GROUNDWATER EXTRACTION AND TREATMENT FACILITIES

3.1 GROUNDWATER EXTRACTION

The groundwater containment and extraction system consists of seven pumping wells and related piping and appurtenances. A site plan showing the approximate locations of the extraction wells and associated facilities is shown in Figure 3-1.

The extraction wells are identified as well numbers AT-3A, AT-5A, AT-5B, AT-7 AT-8, AT-9, and AT-10. Wells AT-3A, AT-5A, and AT-5B were located and constructed to contain and extract contaminated groundwater along the southwestern portion (downgradient) of the NIROP site. Wells AT-7, AT-8, AT-9, and AT-10 were located and constructed to extract contaminated groundwater along the southwestern portion (downgradient) of the NIROP site.

A schematic diagram showing the components of the groundwater extraction and treatment facilities is shown on Figure 3-2. The discharge from each of the seven extraction wells is routed via separate pipelines to a Control House located near the security fence on the western side of the plant. Instrumentation provided at the Control House includes a flow rate indicator and a flow volume totalizer for each extraction well discharge. The combined discharge from the seven extraction wells flows via a single pipe to a Treatment Building located near the Control House. Sampling ports are located on the piping for each extraction well and on the combined discharge to the Treatment Building.

3.2 GROUNDWATER TREATMENT SYSTEM

The construction of the treatment system involved the adaptation of the former pretreatment system and the installation of additional process equipment to ensure that NPDES discharge permit requirements are met.

The major components of the treatment system include a feed tank, air stripping units, and an effluent system. The feed system consists of an equalization tank to collect the groundwater pumped from the extraction well system and feed pumps to convey the groundwater from the equalization tank to the air strippers. Four low profile, tray-type air strippers are operated in parallel. The effluent water flows by gravity to the effluent sump, and the exhaust air is vented to the atmosphere. Effluent pumps convey the treated water from the effluent sump to an existing 72-inch diameter storm sewer that discharges to the Mississippi River through NPDES/SDS Outfall 020.

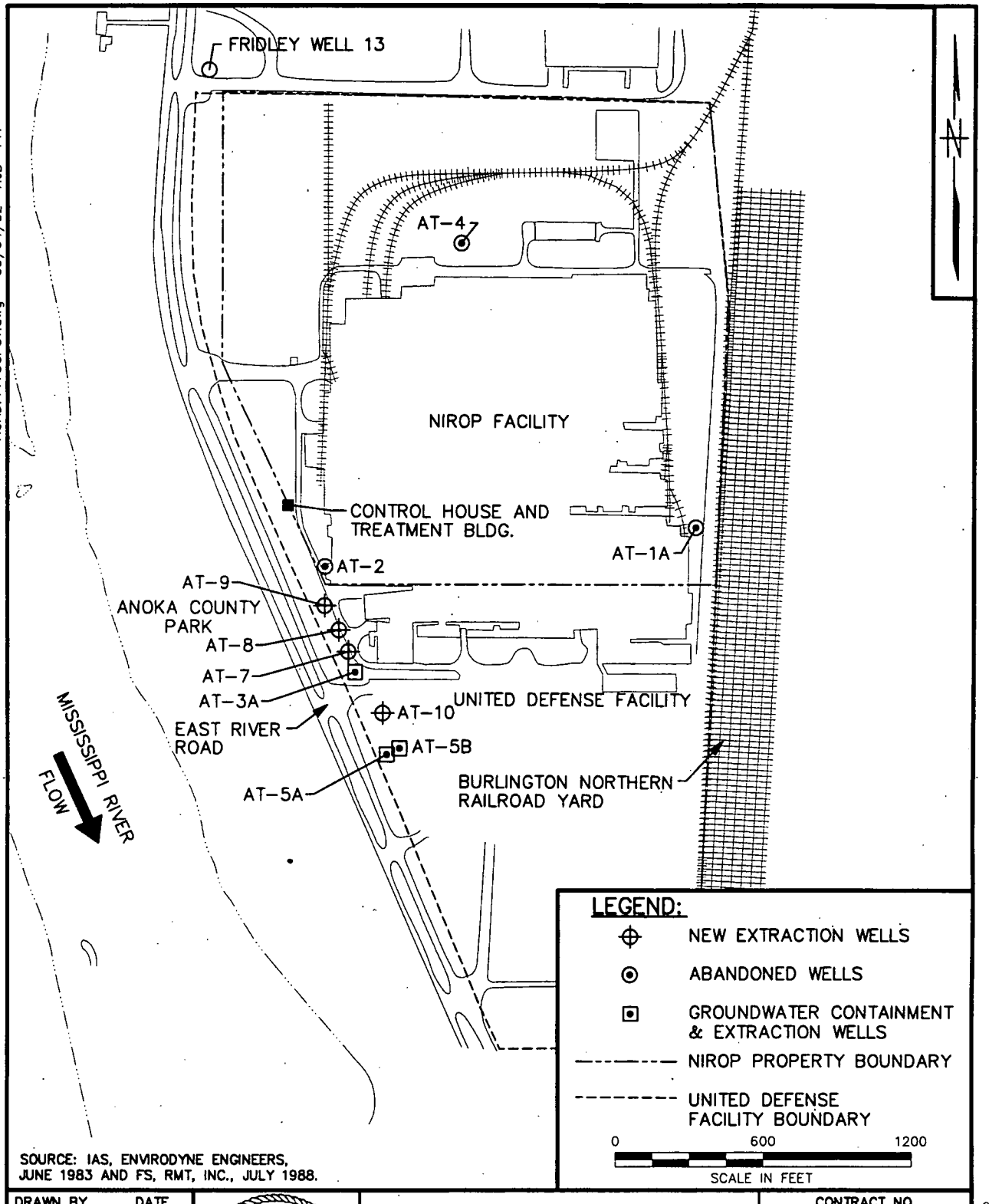

SOURCE: IAS, ENVIRODYNE ENGINEERS, JUNE 1983 AND FS, RMT, INC., JULY 1988.

ACAD: 7173CP31.dwg 09/04/02 HJB PIT

DRAWN BY HJB DATE 9/4/02	DEPARTMENT OF THE NAVY SOUTHERN DIV FACILITIES ENGINEERING COMD	SITE PLAN NAVAL INDUSTRIAL RESERVE ORDNANCE PLANT FRIDLEY, MINNESOTA	CONTRACT NO. 7173
CHECKED BY DATE			APPROVED BY DATE
COST/SCHED-AREA			APPROVED BY DATE
SCALE AS NOTED			DRAWING NO. FIGURE 3-1 / REV. 0

FORM CADD NO. SDIV_AV.DWG - REV 0 - 1/20/98

ACAD: 7842GF02.dwg 09/04/02 HJB PIT

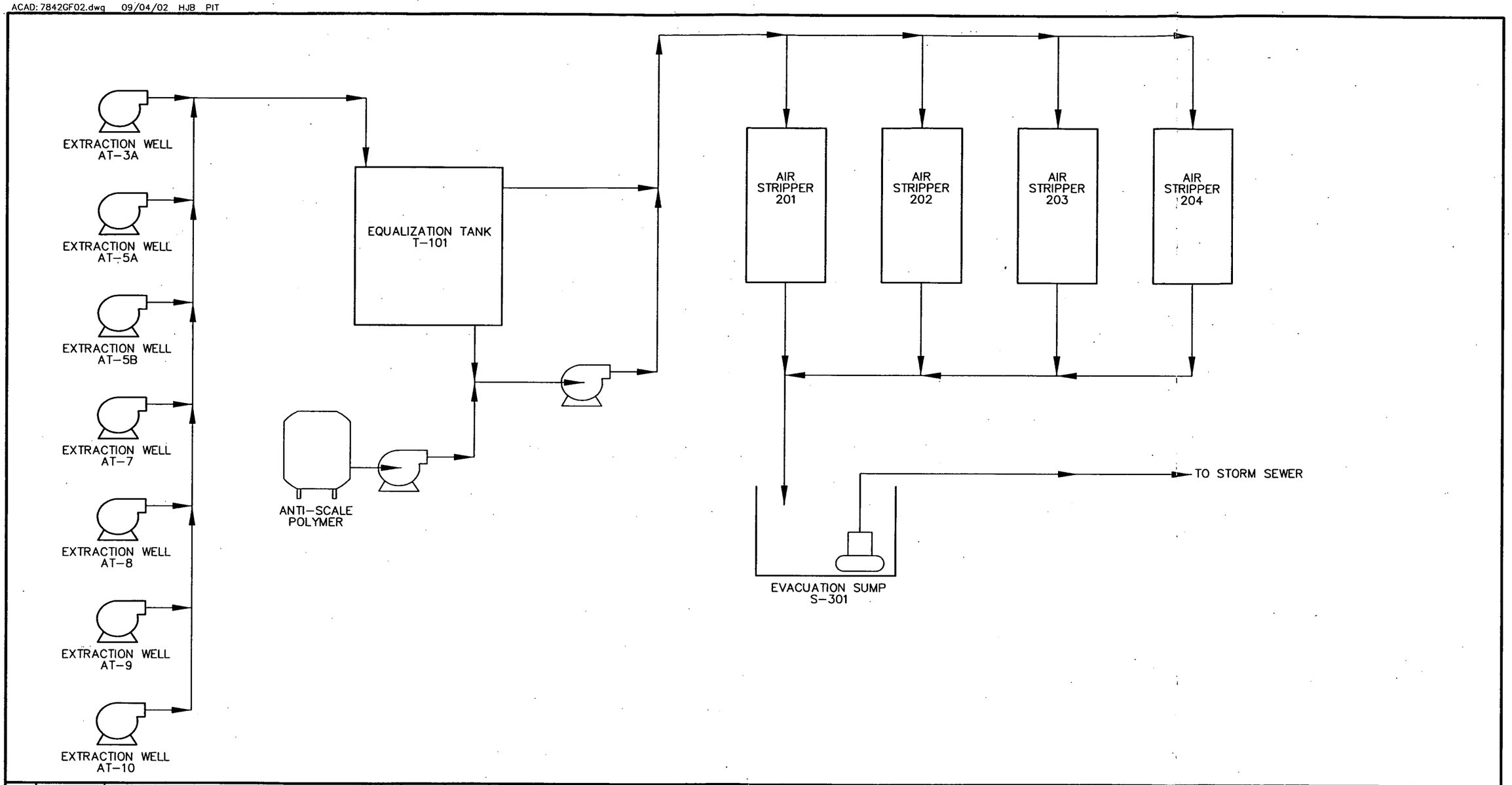

NO.	DATE	REVISIONS	BY	CHKD	APPD	REFERENCES

DRAWN BY HJB DATE 9/4/02
CHECKED BY DATE
COST/SCHED-AREA
SCALE NOT TO SCALE

GROUNDWATER EXTRACTION AND TREATMENT SYSTEM
NAVAL INDUSTRIAL RESERVE ORDNANCE PLANT
FRIDLEY, MINNESOTA

CONTRACT NO. 7842
APPROVED BY DATE
APPROVED BY DATE
DRAWING NO. FIGURE 3-2
REV. 1

FORM CADD NO. SDIV_BH.DWG - REV 0 - 1/20/98

There are no air emission controls for the air strippers. In 2001, the anticipated changes to the air emission rates (AERs) for the groundwater treatment facility were assessed (CH2MHILL, 2001). CH2MHILL determined that the emission rates from the GWTF operation are within the site-specific AERs. Regulatory requirements have been met. Site-specific AERs are emission rate limits that ensure that maximum off-site ambient air impacts are below regulatory-defined allowable off-site concentrations (i.e., increased cancer risk to the public of 1E-05). Site-specific AERs were calculated for carcinogenic compounds that could potentially be emitted from operation of the groundwater treatment facility. The approach involved using the USEPA-approved Industrial Source Complex Short-Term, Version 3 (ISCST3) (Revision 2) atmospheric dispersion model to "back model" from the maximum allowable off-site impact to annual average site-specific AERs. The site-specific AERs and the maximum groundwater production rate were then used to calculate maximum allowable concentrations for groundwater entering the treatment facility. In this manner, groundwater concentrations were used to predict air emissions so that measurement of air emissions was not required. The conservatively estimated allowable groundwater contaminant concentrations were all well above measured groundwater concentrations. Therefore, no emission control measures were required for operating the groundwater treatment facility. Samples of the air stripper influent and effluent were collected during start-up of the groundwater treatment facility to confirm that site-specific AERs were met. Additional samples of influent and effluent are to be collected to meet NPDES permit requirements (Appendix A). To date, AERs have not been exceeded.

It is possible that the extraction well system will be modified in the future. Any system modifications are subject to permit approval and can result in permit modifications. These permit modifications could result in modified AERs.

4.0 GROUNDWATER MONITORING

4.1 OBJECTIVES

The objective of groundwater remediation is to ultimately restore groundwater quality to Safe Drinking Water Act (SDWA) Maximum Contaminant Levels (MCLs). The constituents to be monitored and their respective MCLs are provided in Table 4-1. The objectives of groundwater monitoring are as follows:

- Evaluate the ability of the groundwater extraction system to effectively contain downgradient migration of contaminants and provide water quality improvement.
- Assess the potential for contamination from on-site sources and upgradient (off-site) sources.
- Evaluate air stripper emissions to the atmosphere (pending development of a DQO).
- Evaluate whether the remedies comply with the ROD.
- Evaluate whether the remedies are protective of human health and the environment.
- Evaluate the progress of the remedies in achieving the goals specified in the ROD.
- Evaluate whether project permits are met.
- Evaluate the relative contaminant concentrations along the flow path in relation to the following: upgradient groundwater conditions, known and potential source areas, capture and non-capture of the groundwater contaminant plume, residual contamination beyond the effectiveness of the capture of the remedial system and discharge to the river, and vertical head relationships and the potential flow of contaminants from one aquifer interval to another.

The objectives for the monitoring system have been further refined based upon the data quality objectives (DQOs) decision-making process that was executed by the NIROP Partnering Team. Meetings held in March 19-23, 2001, July 17-19, 2001, and March 6-7, 2002 were used to better define the objectives and formal decision-making process for the site. As determined in these meetings "Problem C: Groundwater Monitoring for Overall Contamination at NIROP" defines six problem statements/decision rules which should be addressed, at least in part, by groundwater monitoring at this site. These problem statements/decision rules are generally defined below:

TABLE 4-1

GROUNDWATER CHEMICALS AND TARGET CLEANUP LEVELS
NIROP FRIDLEY, MINNESOTA

Parameter	Maximum Contaminant Level (µg/L)
1,1-Dichloroethane	--
1,1-Dichloroethene	7
1,2-Dichloroethene (cis-)	70
1,2-Dichloroethene (trans-)	100
Tetrachloroethene	5
1,1,1-Trichloroethane	200
Trichloroethene	5
Vinyl chloride	2

Maximum contaminant levels (MCLs) per 40 CFR 141.
-- MCL not available.

- Decision Rule 1: Determination of capture system performance.
- Decision Rule 2: Determination of contaminant concentrations at Mississippi River compliance wells.
- Decision Rule 3: Determination of change in the plume shape, size, and location.
- Decision Rule 4: Determination of contaminant concentrations relative to surface water and groundwater standards
- Decision Rule 5: Determination of capture system performance, evaluation of system modifications, evaluation of alternative approaches, evaluation of technical impracticability, and/or alternative concentration limit (ACL).
- Decision Rule 6: Determination of practicability of the remedy and evaluate an ACL.

Air stripper emissions to the atmosphere are evaluated using site-specific AERs established to ensure that maximum off-site ambient air impacts are below regulatory-defined allowable off-site concentrations. Table 4-2 presents the allowable air concentrations, AERs, and allowable groundwater concentrations. The allowable groundwater concentration is the level that will not cause the allowable air concentration to be exceeded, based on modeling.

4.2 MONITORING LOCATIONS AND FREQUENCIES

The selection of groundwater monitoring locations was designed to meet the objectives listed in Section 4.1. The monitoring wells and sample frequency selected to meet these objectives were selected during the NIROP Partnering Team Well Selection Meeting (DQO Meeting) held March 6-7, 2002 (Appendix B). Figure 4-1 shows the locations of all monitoring and extraction wells at the site. Table 4-3 lists the wells being sampled for monitoring groundwater chemical characteristics by aquifer, and Table 4-4 lists the intended data uses of analytical results from the monitoring wells. The water level monitoring network includes all of the existing on-site and off-site wells (e.g., Anoka County Park) shown on Figure 4-1 (see Section 4.3.2.1).

One additional well is included in the RAMP to address issues not directly related to containment. Fridley Well No. 13, which is currently not in use, is sampled to confirm that the potable water supply from this well will remain unaffected by groundwater contamination from the site.

TABLE 4-2

**SITE-SPECIFIC ALLOWABLE AIR EMISSION RATES AND GROUNDWATER CONCENTRATIONS
NIROP FRIDLEY
FRIDLEY, MINNESOTA**

Parameter	Allowable Air Concentrations (µg/m^3)	Allowable Air Emission Rate (µg/sec)	Allowable Groundwater Concentration (µg/L)
1,1-Dichloroethane	500	1.35E+8	2,100,000
1,1-Dichloroethene	0.2	5.4E+4	850
Methylene chloride	20	5.4E+6	85,000
Tetrachloroethene	17.2	4.6E+6	73,000
Trichloroethene	5.9	1.6E+6	25,000

Source: Morrison Knudsen Corporation, 1998.

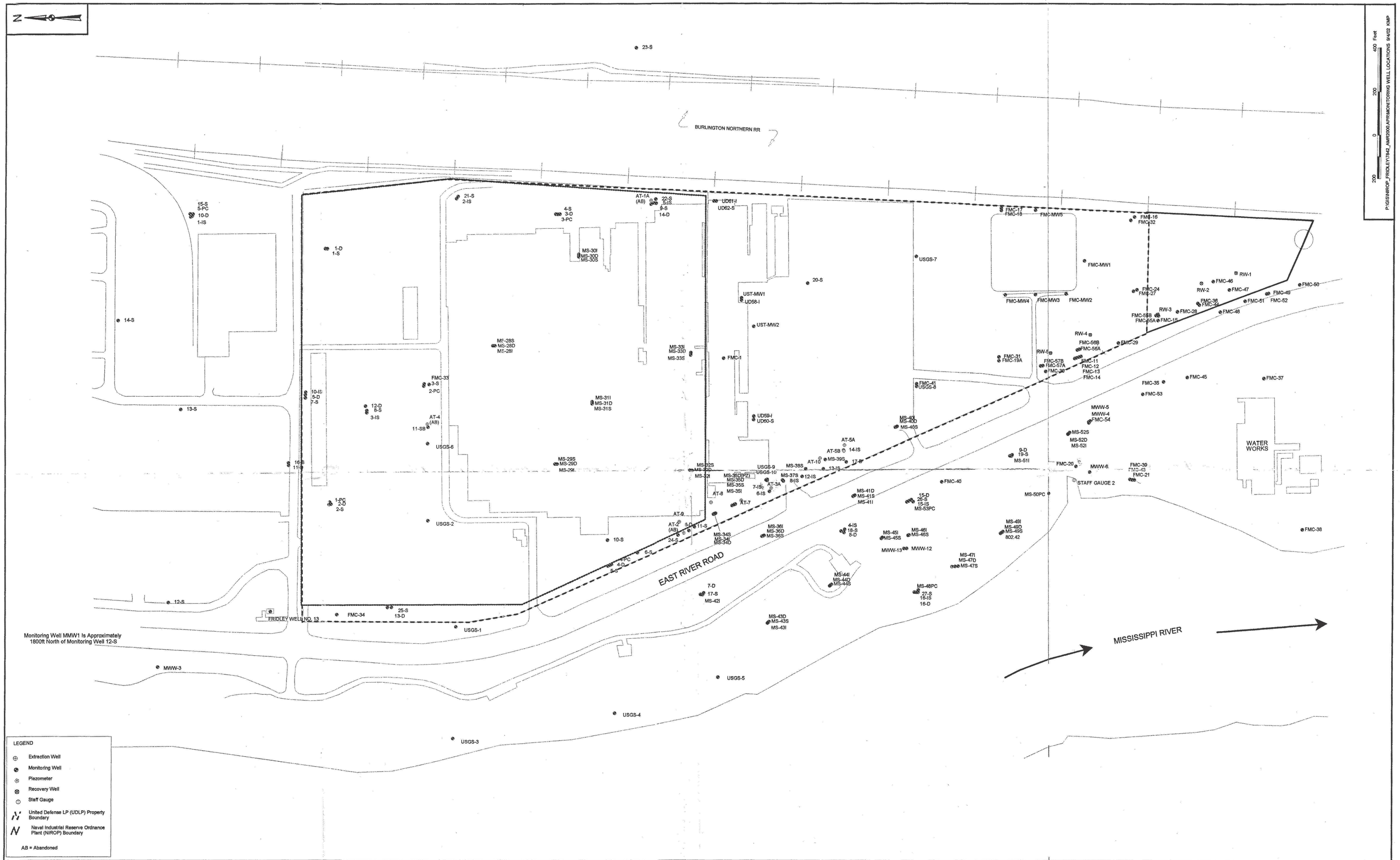

NO.	DATE	REVISIONS	BY	CHKD	APPD	REFERENCES	NO.	RELEASED FOR	BY	DATE

DRAWN BY J. BELLONE DATE 2/22/01
CHECKED BY B. BALKOVEC DATE 2/26/01
COST/SCHEDULE-AREA
SCALE AS NOTED

Tetra Tech NUS, Inc.

MONITORING WELL LOCATION MAP
NIROP FRIDLEY, MINNESOTA

000041501X

CONTRACT NO. 7842
OWNER NO. 0057
APPROVED BY DATE
APPROVED BY DATE
DRAWING NO. FIGURE 4-1
REV. 0

TABLE 4-3

MONITORING WELLS FOR MONITORING GROUNDWATER CHEMICAL CHARACTERISTICS
NIROP FRIDLEY, MINNESOTA
PAGE 1 OF 2

Unconfined Aquifer		Upper Confined Aquifer	Prairie du Chien Aquifer
Shallow Wells	Intermediate Wells		
1-S	1-IS	1-D	1-PC
2-S	2-IS	2-D	2-PC
3-S	3-IS	4-D	3-PC
5-S	4-IS	6-D	4-PC
6-S	5-IS	7-D	5-PC[1]
7-S	6-1S	8-D	MS-28D
8-S	8-1S	9-D[2]	MS-29D
9-S	10-IS	12-D	MS-30D
11-S	12-IS	14-D	MS-31D
14-IS	13-1S	15-D	MS-32D
15-S	15-IS	16-D	MS-33D
16-S	16-IS	17-D	MS-48PC
17-S	AT-3A	AT-5B	MS-50PC
18-S	AT-10	MS-28D	MS-53PC
19-S[2]	MW-28I	MS-29D	Fridley Well 13
20-S[3]	MS-29I	MS-30D	
21-S	MS-30I	MS-31D	
23-S	MS-31I	MS-32D	
24-S	MS-32I	MS-33D	
25-S	MS-33I	MS-34D	
26-S	MS-34I	MS-35D	
27-S[5,6]	MS-35I	MS-36D	
AT-5A	MS-36I	MS-40D	
AT-7	MS-41I	MS-41D	
AT-8	MS-42I[4]	MS-43D	
AT-9	MS-43I	MS-44D	
MS-28S	MS-44I	MS-47D	
MS-29S	MS-45I	MS-49D	
MS-30S	MS-46I	MS-52D[2]	
MS-31S	MS-47I		
MS-32S	MS-49I		
MS-33S	MS-51I[2]		
MS-34S	MS-52I[2]		
MS-35S			
MS-36S			
MS-37S			
MS-38S			
MS-39S			
MS-40S			
MS-41S			
MS-43S			
MS-44S			
MS-45S[5,6]			
MS-46S			
MS-47S[5,6]			
MS-49S			
MS-52S[2]			
UD-63S[3]			

TABLE 4-3

MONITORING WELLS FOR MONITORING GROUNDWATER CHEMICAL CHARACTERISTICS
NIROP FRIDLEY, MINNESOTA
PAGE 2 OF 2

Unconfined Aquifer		Upper Confined Aquifer	Prairie du Chien Aquifer
Shallow Wells	Intermediate Wells		
USGS 2 USGS 5 USGS 8			

NOTE: Many wells have multiple monitoring purposes. If a well is to be eliminated from the monitoring network in the future, all of these purposes must be evaluated before it can be eliminated.

1 Navy is sampling on an annual basis to determine contaminant migration from an upgradient source. This decision is not being dictated by the regulatory agencies or partnering team.

2 The groundwater flow direction in the southern portion of the ACP indicates that the TCE detected in wells MS-52S, MS-52I, and MS-52D and perhaps wells 19-S, MS-51I, and 9-D may originate from the UDLP site. This has been noted in the 1999 AMR (TtNUS, 2000). This statement should be documented with all sample results from these wells in each AMR. MPCA, Navy, and UDLP will distinguish between contamination from NIROP and UDLP in the future.

3 Data from UD-63S will come at the courtesy of UDLP. This data will be collected during the same sampling period as AMR data. If data from UD-63S is not available, then 20-S will be sampled in its place. If this is the case, 20-S will represent the plume edge at this location (i.e., in place of UD-63S).

4 This well has been moved to the shallow zone per the telephone conference on May 13, 2002.

5 Quarterly sampling is being performed by CCI for the Vegetable Oil Treatability Study at a frequency of 0, 2, 5, 8, and 12 months after treatment plus any contingency sample rounds. Sampling began in December 2001.

6 Sampling performed by CCI for the Vegetable Oil Treatability Study will be done in place of AMR sampling, however, this data will be reported in the AMR.

TABLE 4-4

SUMMARY OF MONITORING WELL TYPES FOR GROUNDWATER MONITORING
AS DEFINED IN WELL SECTION MEETING MARCH 2002[1,2,3]
NIROP FRIDLEY, MINNESOTA
PAGE 1 OF 3

Problem C Decision Rule 1						
Wells Needed to Define Plume Edge (to define 100 ppb of TCE)[2, 4]						
Shallow Wells						
2-S	USGS 2	MS-40S	NA	NA	NA	NA
5-S	USGS 5	MS-42I[5]				
6-S	USGS 8	MS-43S				
17-S	MS-34S	MS-52S[1]				
19-S[1]	UD-63S[1,6]					
7-S						
Intermediate Wells						
3-IS	MS-45I	NA	NA	NA	NA	NA
MS-29I	MS-46I					
MS-41I						
MS-43I						
MS-44I						
Deep Wells						
8-D	MS-36D	MS-43D	NA	NA	NA	NA
9-D	MS-40D	MS-44D				
15-D	MS-41D	MS-47D				
MS-35D						
Bedrock Wells						
NA	NA	NA	NA	NA	NA	NA

TABLE 4-4

SUMMARY OF MONITORING WELL TYPES FOR GROUNDWATER MONITORING
AS DEFINED IN WELL SECTION MEETING MARCH 2002[1,2,3]
NIROP FRIDLEY, MINNESOTA
PAGE 2 OF 3

Problem C Decision Rule 2, 3, 4

Upgradient	Back-ground[3]	Cross-gradient	Plume Edge	In-Plume N!ROP		Wells in the ACP[7]		Down-gradient	Point of Compliance	Sentinel[6]	Off-Base
Shallow Wells											
15-S	NA	16-S	MS-52S[1]	3-S[8]	NA	USGS 5	MS-38S	NA	USGS-5	NA	NA
21-S		MS-52S[1]	5-S	8-S[8]		17-S	MS-39S		MS-43S		
23-S		USGS 8	7-S	9-S[8]		24-S	MS-40S		MS-44S		
			16-S	MS-28S[8]		11-S	MS-41S		27-S		
			25-S	MS-29S[8]		MS-34S	18-S		MS-47S		
			USGS 5	MS-30S[8]		MS-35S	27-S		MS-49S		
			USGS 8	MS-31S[8]		MS-36S	MS-47S		19-S[1]		
			UD-63S[1,6]	MS-32S[8]		MS-37S	MS-49S				
				MS-33S[8]		MS-43S	26-S				
						MS-44S	14-IS				
						MS-45S	19-S[1]				
						MS-46S					
Intermediate Wells											
1-IS	NA	10-IS	MS-43I	3-IS[8]	NA	MS-34I	MS-41I	NA	MS-43I	NA	NA
2-IS			MS-52I[1,9]	5-IS(8]		MS-35I	MS-45I		MS-44I		
				MS-28I[8]		MS-36I	MS-46I		16-IS		
				MS-29I[8]		MS-43I	MS-47I		MS-47I		
				MS-30I[8]		MS-44I	MS-49I		MS-49I		
				MS-31I[8]		6-IS	MS-51I[1]		MS-51I[1]		
				MS-32I[8]		8-IS	4-IS				
				MS-33I[8]		12-IS	15-IS				
						13-IS	16-IS				
Deep Wells											
1-D	NA	NA	2-D	12-D[8]	MS-29D[8]	MS-34D	6-D	NA	MS-43D	NA	NA
14-D			4-D	MS-28D[8]	MS-31D[8]	MS-35D	7-D		MS-44D		
				MS-30D[8]		MS-36D	8-D		16-D		
				MS-32D[8]		MS-41D	9-D[1]		MS-47D		
				MS-33D[8]		MS-43D	15-D		MS-49D		
						MS-44D	16-D		9-D[1]		
						MS-47D	17-D				
						MS-49D	MS-40D				
Bedrock Wells(3)											
1-PC[10] 2-PC[10] 3-PC[10] Fridley Well 13	4-PC[10] 5-PC[10]	MS-48PC[10] MS-50PC[10] MS-53PC[10]	Fridley Well 13	NA	NA	NA	NA	NA	NA	NA	NA

TABLE 4-4

SUMMARY OF MONITORING WELL TYPES FOR GROUNDWATER MONITORING
AS DEFINED IN WELL SECTION MEETING MARCH 2002[1,2,3]
NIROP FRIDLEY, MINNESOTA
PAGE 3 OF 3

Notes:

1 The groundwater flow direction in the southern portion of the ACP indicates that the TCE detected in wells MS-52S, MS-52I, and MS-52D and perhaps wells 19-S, MS-51I, and 9-D may originate from the UDLP site. This has been noted in the 1999 AMR (TtNUS, 2000). This statement should be documented with all sample results from these wells in each AMR. MPCA, Navy, and UDLP will distinguish between contamination from NIROP and UDLP in the future.
2 Many wells have multiple monitoring purposes. If a well is to be eliminated from the monitoring network in the future, all of these purposes must be evaluated before it can be
3 No background wells at the site due to offsite contamination migrating onto the Navy property.
4 Based upon 1999 AMR analytical data.
5 This well has been moved to the shallow zone per the telephone conference on May 13, 2002.
6 Data from UD-63S will come at the courtesy of UDLP. This data may be collected at a different period (~within 6 months of AMR data). If data is not available then 20-S will be sampled in its place. If this is the case 20-S will represent the plume edge at this location (i.e., in place of UD-63S).
7 Refer to the well meeting notes and polygons noted by the Partnering Team on the attached Figures 1, 2, and 3.
8 These wells will be sampled once every 5 years (ie., first round in 2001 and the next sample round will be in 2006).
9 Northwest of NIROP Plant building (western N40 area) monitoring is pending further discussion.
10 The well types for this layer were not identified by the Partnering Team.

NA = None available/not applicable.

The sample frequencies are tabulated on Table 4-5. The extraction wells are sampled on a semi-annual basis in April and October. Monitoring wells are sampled on a frequency that varies significantly from quarterly, semi-annually, annually, biennially (occurring once every two years), to once every five years. Table 4-5 details the frequency of sampling each individual well in the monitoring network. Wells sampled quarterly are to be performed as part of the Vegetable Oil Injection treatability study. Wells sampled semi-annually should be sampled concurrently with the extraction wells, in April and October. Wells sampled annually or less frequently should be sampled in October of a given year, concurrent with the extraction of the other monitoring wells.

4.3 SAMPLING PROTOCOL

4.3.1 Preparation

4.3.1.1 Analyses, Bottleware, and Preservation Requirements

All groundwater samples will be analyzed at a laboratory for VOCs and analyzed in the field for pH, specific conductance, turbidity, and temperature. The specific VOCs and associated practical quantitation limits (PQLs) are provided in Table 4-6. Please note that the eight chemicals of concern (COC) identified on Table 4-6 are the only chemicals which will be analyzed. The chemicals selected include TCE and its degradation (daughter) products, as well as other chemicals historically detected at the site. This list was approved by the NIROP Partnering Team during DQO meetings (see Section 4.1 for more information). Laboratory-supplied sample containers and preservatives are to be used for all groundwater samples. Table 4-7 provides a summary of the sample analyses, sample containers, preservation methods, holding times, and analytical methods.

Additional information on sample containers and preservation is provided in Appendix C.

Table 4-7 is in agreement with MPCA guidance in Appendix C. If any information is contradictory, sampling will be conducted in accordance with MPCA guidance in Appendix C.

4.3.1.2 Purging and Sampling Equipment

The sampling techniques for all groundwater monitoring associated with the groundwater extraction and treatment system evaluation at the NIROP will be consistent. The groundwater monitoring wells will be purged until stabilized and sampled using a submersible pump. This is discussed in greater detail in Sections 4.3.2.2 and 4.3.3.1. The extraction wells are continuously pumped; therefore, additional purging or stabilization tests will not be required. Groundwater extraction wells will be sampled from taps in the

TA[illegible]-5
SUMMARY OF GROUNDWATER SAMPLING NETWORK[1,2]
DEFINED IN MARCH 2002 WELL SELECTION MEETING
NIROP FRIDLEY, MINNESOTA
PAGE 1 OF 4

Well ID	2001 (Completed)		2002			2003[3]		2004		2005		2006		2007[2]	2008[1,2]
	Semi-annual	Annual	Quarterly[4]	Semi-annual	Annual	Semi-annual	Annual	Semi-annual	Annual	Semi-annual	Annual	Semi-annual	Annual		
NIROP Shallow Wells															
1-S					X				X				X	Wells selected for groundwater sampling will be determined based upon 2006 sample results.	
2-S					X				X				X		
3-S		X											X		
4-S															
5-S					X				X				X		
6-S					X		X		X		X		X		
7-S		X			X				X				X		
8-S		X											X		
9-S		X			X				X				X		
10-S															
11-S					X		X		X		X		X		
11-SB															
12-S															
13-S															
14-S															
14-IS		X			X		X		X		X		X		
15-S		X			X				X				X		
16-S		X											X		
17-S		X			X		X		X		X		X		
18-S		X				X		X		X		X			
19-S[5]		X			X		X		X		X		X		
20-S[6]		X			X		X		X		X		X		
21-S		X			X				X				X		
22-S															
23-S					X				X				X		
24-S		X			X		X		X		X		X		
25-S					X		X		X		X		X		
26-S		X				X		X		X		X			
27-S[4,7]		X	X				X		X		X		X		
MS-28S		X											X		
MS-29S													X		
MS-30S													X		
MS-31S		X											X		
MS-32S		X											X		
MS-33S		X											X		
MS-34S		X			X		X		X		X		X		
MS-35S		X			X		X		X		X		X		
MS-36S		X			X	X		X		X		X			
MS-37S		X			X		X		X		X		X		
MS-38S					X		X		X		X		X		
MS-39S					X		X		X		X		X		
MS-40S		X			X		X		X		X		X		
MS-40I															
MS-41S		X			X	X		X		X		X			
MS-43S		X			X		X		X		X		X		

TABLE 4-5
SUMMARY OF GROUNDWATER SAMPLING NETWORK[1,2]
DEFINED IN MARCH 2002 WELL SELECTION MEETING
NIROP FRIDLEY, MINNESOTA
PAGE 2 OF 4

Well ID	2001 (Completed)		2002			2003[3]		2004		2005		2006		2007[2]	2008[1,2]
	Semi-annual	Annual	Quarterly[4]	Semi-annual	Annual	Semi-annual	Annual	Semi-annual	Annual	Semi-annual	Annual	Semi-annual	Annual		
NIROP Shallow Wells (Continued)															
MS-44S		X			X	X		X		X		X		Wells selected for groundwater sampling will be determined based upon 2006 sample results.	
MS-45S[4,7]		X	X				X		X		X		X		
MS-46S		X			X		X		X		X		X		
MS-47S[4,7]		X	X				X		X		X		X		
MS-49S		X			X		X		X		X		X		
MS-52S[5]		X			X		X		X		X		X		
USGS 1															
USGS 2		X			X				X				X		
USGS 3															
USGS 4															
USGS 5		X			X		X		X		X		X		
USGS 6															
USGS 7															
USGS 8		X			X		X		X		X		X		
USGS 9															
AT-5A	X			X		X		X		X		X			
AT-7	X			X		X		X		X		X			
AT-8	X			X		X		X		X		X			
AT-9	X			X		X		X		X		X			
NIROP Intermediate Wells															
1-IS		X			X				X				X		
2-IS		X			X				X				X		
3-IS		X			X		X		X		X		X		
4-IS		X			X	X		X		X		X			
5-IS		X											X		
6-IS					X		X		X		X		X		
7-IS															
8-IS					X		X		X		X		X		
10-IS					X				X				X		
12-IS		X			X		X		X		X		X		
13-IS					X		X		X		X		X		
15-IS		X			X		X		X		X		X		
16-IS		X			X		X		X		X		X		
MS-28I		X											X		
MS-29I		X			X		X		X		X		X		
MS-30I		X											X		
MS-31I													X		
MS-32I		X											X		
MS-33I		X											X		
MS-34I					X		X		X		X		X		
MS-35I		X			X		X		X		X		X		
MS-36I		X			X	X		X		X		X			
MS-41I		X			X	X		X		X		X			
MS-42I[8]					X		X		X		X		X		
MS-43I		X			X		X		X		X		X		

TAB[illegible]5

SUMMARY OF GROUNDWATER SAMPLING NETWORK[1,2]
DEFINED IN MARCH 2002 WELL SELECTION MEETING
NIROP FRIDLEY, MINNESOTA
PAGE 3 OF 4

Well ID	2001 (Completed)		2002			2003[3]		2004		2005		2006		2007[2]	2008[1,2]
	Semi-annual	Annual	Quarterly[4]	Semi-annual	Annual	Semi-annual	Annual	Semi-annual	Annual	Semi-annual	Annual	Semi-annual	Annual		
NIROP Intermediate Wells (Continued)															
MS-44I		X			X	X		X		X		X		Wells selected for groundwater sampling will be determined based upon 2006 sample results.	
MS-45I		X			X	X		X		X		X			
MS-46I					X		X		X		X		X		
MS-47I		X			X		X		X		X		X		
MS-49I		X			X		X		X		X		X		
MS-51I[5]		X			X		X		X		X		X		
MS-52I[5]		X			X		X		X		X		X		
AT-3A	X			X		X		X		X		X			
AT-10	X			X		X		X		X		X			
NIROP Deep Wells															
1-D		X			X				X				X		
2-D					X				X				X		
3-D															
4-D					X				X				X		
5-D															
6-D		X			X		X		X		X		X		
7-D		X			X		X		X		X		X		
8-D		X			X		X		X		X		X		
9-D[5]		X			X		X		X		X		X		
10-D															
11-D															
12-D		X											X		
13-D															
14-D					X				X				X		
15-D		X			X	X		X		X		X			
16-D		X			X		X		X		X		X		
17-D		X			X		X		X		X		X		
MS-28D		X											X		
MS-29D													X		
MS-30D													X		
MS-31D													X		
MS-32D		X											X		
MS-33D		X											X		
MS-34D					X		X		X		X		X		
MS-35D		X			X		X		X		X		X		
MS-36D		X			X	X		X		X		X			
MS-40D		X			X		X		X		X		X		
MS-41D					X	X		X		X		X			
MS-43D					X		X		X		X		X		
MS-44D		X			X		X		X		X		X		
MS-47D		X			X		X		X		X		X		
MS-49D		X			X		X		X		X		X		
MS-52D[5]		X													
USGS 10															
AT-5B	X			X		X		X		X		X			

TABLE 4-5
SUMMARY OF GROUNDWATER SAMPLING NETWORK[1,2]
DEFINED IN MARCH 2002 WELL SELECTION MEETING
NIROP FRIDLEY, MINNESOTA
PAGE 4 OF 4

Well ID	2001 (Completed)		2002			2003[(3)]		2004		2005		2006		2007[(2)]	2008[(1,2)]
	Semi-annual	Annual	Quarterly[(4)]	Semi-annual	Annual	Semi-annual	Annual	Semi-annual	Annual	Semi-annual	Annual	Semi-annual	Annual		
NIROP Bedrock Wells															
1-PC													X	Wells selected for groundwater sampling will be determined based upon 2006 sample results.	
2-PC					X				X				X		
3-PC													X		
4-PC													X		
5-PC[9]		X			X		X		X		X		X		
MS-48PC		X											X		
MS-50PC													X		
MS-53PC		X			X				X				X		
Fridley Well 13	X				X				X				X		
NIROP ACP Oil Injection Wells[3]															
PES-CW-1			X												
PES-CW-2			X												
PES-CW-3			X												
PES-MW-1			X												
PES-MW-2			X												
PES-MW-3			X												
PES-MW-4			X												
PES-MW-5			X												
PES-MW-6			X												
PES-MW-7			X												
PES-MW-8			X												
PES-MW-9			X												
PES-INJ-1			X												
PES-INJ-2			X												
PES-INJ-3			X												
PES-BG-1			X												
BG-2			X												
BG-3			X												
UNITED DEFENSE LP WELLS															
UD63-S[6]					X				X				X		

Notes:

1. Long-term monitoring will be evaluated each year in the Annual Monitoring Report. Plan for 2007 and 2008 and future will be determined based upon 2006 data.
2. Many wells have multiple monitoring purposes. If a well is to be eliminated from the monitoring network in the future, all of these purposes must be evaluated before it can be eliminated.
3. The next 00-1 Five Year Review Reort is due in 2003, requiring a larger data set.
4. Quarterly sampling will be performed by CCI for the Vegetable Oil Treatability Study at a frequency of 0, 2, 5, 8, 12 months after treatment plus any contingency sample rounds. Sampling began in Decen
5. The groundwater flow direction in the southern portion of the ACP indicates that the TCE detected in wells MS-52S, MS-52I, and MS-52D and perhaps wells 19-S, MS-51I, and 9-D may originate from the UDLP site. This has been noted in the 1999 AMR (TtNUS, 2000). This statement should be documented with all sample results from these wells in each AMR. MPCA, Navy, and UDLP will distinguish between contamination from NIROP and UDLP in the future.
6. Data from UD-63S will come at the courtesy of UDLP. This data may be collected at a different period (~within 6 months of AMR data). If data is not available then 20-S will be sampled in its place. If this is the case 20-S will represent the plume edge at this location (i.e., in place of UD-63S).
7. Samping performed by CCI for the Vegetable Oil Treatability Study will be done in place of AMR samping; however, this data will be reported in the AMR.
8. This well has been moved to the shallow zone per the tele-con on May 13, 2002.
9. Navy is sampling on an annual basis to determine the contaminant migration coming from an upgradient source. This decision is not being dictated by the regulatory agencies or Partnering Team.

TABLE 4-6

PRACTICAL QUANTITATION LIMITS – GROUNDWATER PARAMETERS NIROP FRIDLEY, MINNESOTA

Analyte	PQL (µg/L)
1,1-Dichloroethane	5
1,1-Dichloroethene	5
1,2-Dichloroethene (cis-)	5
1,2-Dichloroethene (trans)	5
Tetrachloroethene	5
1,1,1-Trichloroethane	5
Trichloroethene	5
Vinyl chloride	5

Analytical Method - SW-846 8260B

TABLE 4-7

BOTTLEWARE, PRESERVATION, AND HOLDING TIME REQUIREMENTS
GROUNDWATER SAMPLES
NIROP FRIDLEY, MINNESOTA

Sample Type	Analytical Parameters	Analytical Method	Number of Containers	Type of Container	Preservation Requirements	Holding Time
Monitoring Wells, Extraction Wells, Fridley Well No. 13	VOCs	SW-846 8260B	2	40 mL glass vial	HCl to pH < 2; Cool to 4°C	14 days
Monitoring Wells, Extraction Wells, Fridley Well No. 13	Field parameters	Field	NA	NA	NA	Analyze immediately

Notes:
VOCs - Volatile organic compounds (see Table 4-1).
Field parameters - pH, specific conductance, turbidity, and temperature.
NA - Not applicable.
mL - milliliter.
HCl - Hydrochloric acid.

Control House. Fridley Well No. 13 will be purged until stabilized then sampled by City of Fridley employees. This well will be sampled from a sampling tap in the building housing the well.

4.3.1.3 Quality Assurance for Field Procedures

Particular care will be exercised to avoid the following common ways in which cross contamination or background contamination may compromise groundwater samples:

- Improper storage or transportation of equipment.
- Contaminating the equipment or sample bottles on site by setting them on or near potential contamination sources such as uncovered ground, a contaminated vehicle, or vehicle exhaust.
- Handling bottles or equipment with dirty hands or gloves.
- Inadequate cleaning of well purging or sampling devices.
- Placing equipment directly onto the ground surface.

Field QA procedures to evaluate potential cross contamination are described in Section 4.3.3.

4.3.1.4 Decontamination, Storage, and Transport of Equipment

It is important not to contaminate or alter the sample during collection. Sampling equipment will be pre-cleaned or dedicated and will only be used to collect samples at one location. Clean outer garments will be accessible to field personnel in an area free from potential contamination. Water, laboratory-grade soap, and paper towels will also be kept in a clean location for both regular clean-up and emergency use. Field personnel will wash and dry their hands and all exposed surfaces before leaving the contamination reduction zone. Used paper towels will be placed in the disposal bag. Sample bottles will be pre-cleaned by the manufacturer.

Decontamination of sampling equipment is essential to prevent cross-contamination of samples with the sampling device. Decontamination procedures are presented in Table 4-8.

It is anticipated that Table 4-8 is in agreement with MPCA guidance in Appendix C. If information is contradictory, sampling will be conducted in accordance with MPCA guidance in Appendix C.

Small-diameter (e.g., 2-inch or 3-inch) submersible pumps will be used to purge and sample water from the monitoring wells. Pumps will be decontaminated using the following procedure:

TABLE 4-8

SAMPLING EQUIPMENT DECONTAMINATION PROCEDURES
NIROP FRIDLEY, MINNESOTA

Equipment	Laboratory-Grade Soap and Water Wash	Alconox/Clean Water Solution	Triple Rinse with Deionized Water
Water Level Indicator	X	-	X
Pumps	-	X	X
pH meter, conductivity meter, thermometer, turbidity meter	-	-	X

Note: Tap water will not be from the NIROP Fridley water supply system. City of Minneapolis drinking water will be used. Distilled water may be substituted.

- Prior to pump use, connect all hoses, sample tubing, and prepare the pump for use.

- Construct a decontamination station consisting of four sections of appropriate length and diameter of PVC pipe. Fill the first section of tube with Alconox/clean water solution. Fill the first tubing with potable water and the remaining tubes with de-ionized water.

- Submerge the pump in the first station with the open hose end also in the same tube to recirculate the solution. Be sure to circulate through the pump and all sample tubing.

- Stand by with additional solution and turn on the pump. Immediately refill the tube to the top to replace solution that enters the tubing. Allow the pump to run for approximately 1 minute after the solution passes through the system one complete cycle. Pumps should not be allowed to run for more than approximately 1 minute at each station or overheating may occur and result in pump damage.

- Move the pump successively through the remaining three stations at 1-minute intervals. The pump must be turned off during each move.

- Inspect for remaining particles or surface film and repeat cleaning and rinse procedures if necessary.

- Clean external hose surfaces by rinsing once with distilled water and place hoses in clean, large plastic garbage bags.

Because the pump is used to both purge and sample the monitoring well, it must be decontaminated after use at each well. Purging and sampling of monitoring wells will begin with the least contaminated wells and proceed to increasingly contaminated wells based on iso-concentration maps presented in the recent year's AMR. For each set of equipment, for example a pump and tubing, both the purging and sampling will be completed for the first well without removing the pump or tubing before beginning purging at subsequent wells. New, clean, plastic drop cloths will be used at each well location to protect equipment from contact with soil around the well.

Water level measuring equipment that contacts the groundwater must also be decontaminated after use at each well (see Table 4-8).

4.3.2 Preliminary Field Work

4.3.2.1 Water Level Measurements

Groundwater level measurements will be taken in conjunction with the semi-annual groundwater sampling rounds in April and October. During each sampling event, a synoptic round of water level measurements and river stage measurements will be taken at the Facility. Table 4-9 lists the wells, at a minimum, that are to be measured. This list includes the monitoring wells and extraction wells that are sampled for groundwater as well as other wells at the Facility. If possible, these synoptic water level measurements should be performed during the same period as any synoptic water level measurements planned at the adjacent UDLP site. All measurements shall be taken within a 24-hour period of consistent weather conditions to minimize atmospheric/precipitation effects on groundwater levels. The sequence of measuring water levels will be determined in the field by the site technician. Water level measurements shall be recorded on the appropriate field forms in Appendix D.

Monitoring Wells

All groundwater level measurements will be made using a reference point established on the well casing consisting of either an indelible mark or a notch on the highest point on the northern edge of the well casing. A battery powered water level indicator will be the primary device for water level measurements. The indicator will be a self-contained, transistorized instrument equipped with a cable and sensor that activates a buzzer and a light when it comes in contact with the water. The depth to water will be read from permanent 0.01-foot increment markings on the cable.

Additional information on water level measurements is provided in Appendix C.

Extraction Wells

Water level readings for the groundwater extraction wells will be made by reading the water level indication gauges installed at each well head. If necessary, the protective covers over the pitless adapters will be removed and water level measurements will be taken using the same battery-operated water level indicator used for measurements at the monitoring wells.

Fridley Well No. 13

A stabilization test (see Section 4.3.2.2) may be necessary because Fridley Well No. 13 is not routinely used. During November 1990, the static water level was 33 feet below ground surface and the pumping

TABLE 4-9

GROUNDWATER WELLS FROM WHICH WATER LEVEL MEASUREMENTS WILL BE TAKEN
NIROP FRIDLEY, MINNESOTA
PAGE 1 OF 2

Shallow Wells	Intermediate Wells	Deep Wells	Bedrock Wells	Mississippi River Staff Gauge
1-S	1-IS	1-D	1-PC	River Level (1)
2-S	2-IS	2-D	2-PC	
3-S	3-IS	4-D	3-PC	
4-S	4-IS	5-D	4-PC	
5-S	5-IS	6-D	5-PC	
6-S	6-IS	7-D	MS-48PC	
7-S	7-IS	8-D	MS-50PC	
8-S	8-IS	9-D	MS-53PC	
9-S	10-IS	10-D		
10-S	12-IS	11-D		
11-S	13-IS	12-D		
11-SB	15-IS	13-D		
12-S	16-IS	14-D		
13-S	AT-3A	15-D		
14-IS	AT-10	16-D		
15-S	MS-28I	17-D		
16-S	MS-29I	AT-5B		
17-S	MS-30I	MS-28D		
18-S	MS-31I	MS-29D		
19-S	MS-32I	MS-30D		
20-S	MS-33I	MS-31D		
21-S	MS-34I	MS-32D		
22-S	MS-35I	MS-33D		
23-S	MS-36I	MS-34D		
24-S	MS-41I	MS-35D		
25-S	MS-43I	MS-36D		
26-S	MS-44I	MS-40D		
27-S	MS-45I	MS-41D		
AT-5A	MS-46I	MS-43D		
AT-7	MS-47I	MS-44D		
AT-8	MS-49I	MS-47D		
AT-9	MS-51I	MS-49D		
MS-28S	MS-52I	MS-52D		
MS-29S		USGS10		
MS-30S				
MS-31S				
MS-32S				
MS-33S				

TABLE 4-9

GROUNDWATER WELLS FROM WHICH WATER LEVEL MEASUREMENTS WILL BE TAKEN
NIROP FRIDLEY, MINNESOTA
PAGE 2 OF 2

Shallow Wells	Intermediate Wells	Deep Wells	Bedrock Wells	Mississippi River Staff Gauge
MS-34S				
MS-35S				
MS-36S				
MS-37S				
MS-38S				
MS-39S				
MS-40S				
MS-40I				
MS-41S				
MS-42I				
MS-43S				
MS-44S				
MS-45S				
MS-46S				
MS-47S				
MS-49S				
MS-52S				
USGS 1				
USGS 2				
USGS 3				
USGS 4				
USGS 5				
USGS 6				
USGS 7				
USGS 8				
USGS 9				
PES-MW-1(2)				
PES-MW-2(2)				
PES-MW-5(2)				
PES-CW-2(2)				

1 At the time of the synoptic groundwater level measurements, a river level measurement will be taken at the Mississippi River Staff guage adjacent to the south storm sewer outfall on the southern end of Anoka County Park.

2 Wells were formerly referred to as follows: VG-MW-1, VG-MW-2, VG-MW-5, and VG-CW respectively. Location of these wells are not shown on Figure 4-1. They can be located on CH2MHill Vegetable Oil Treatability Study Work Plan and Reports.

level was 41 feet. Using these values, the total well volume was calculated as 6,670 gallons. This value will be used for well purging. Additional water level data from the City of Fridley will not be required.

Mississippi River

Water level data for the Mississippi River immediately west of the NIROP Fridley will be collected during each round of water level measurements. Water level measurements will be made by measuring down to the river surface from an existing structure along the riverbank near the NIROP on which a paint mark was established to serve as a reference elevation. The reference elevation was surveyed relative to the benchmark used to establish the reference elevations for the monitoring well network.

4.3.2.2 Purging, Stabilization, and Field Tests

The following section discusses well purging, stabilization, and field test procedures. Additional information is presented in Appendix C, Section 3.4, Field Water Quality Measurements and Section 3.5, Purging and Stabilization.

Monitoring Wells

Monitoring wells shall be purged and sampled in accordance with the MPCA Sampling Standard Operating Procedure included in Appendix C and as described below. These procedures were agreed to by the NIROP Partnering Team during the Data Quality Objective (DQO) Meeting on March 6 and 7, 2002 in Charleston, South Carolina. Based on the Partnering Team decision at that meeting, further evaluation is being conducted of the use of other sampling methods and procedures, including but not limited to, passive diffusion bag samplers in future sampling efforts at the site.

Well purging will be performed to remove stagnant water from the well casing prior to collecting a sample because the stagnant water is not representative of actual groundwater chemistry. The purging will draw in groundwater from the area surrounding a well to obtain a sample more representative of the water quality.

As defined in Section 3.5 of Appendix C, wells that do not have slow recovery rates shall be purged in a manner that, to the extent practical, removes all of the "old" water in the well so it is replaced by fresh groundwater from outside the well.

A submersible and/or bladder pump will be used to purge and sample groundwater from monitoring wells. Wells will be purged at a maximum rate that will not cause more than 2 feet of drawdown. The well will be purged by placing the intake of the pump just below the water table surface.

Purging will be accomplished by removing water from the monitoring well until a minimum of three well volumes have been sampled and field water quality parameters (pH, specific conductance, turbidity, and temperature) have stabilized. These readings will be performed using a water quality meter and flow through cell. If the water quality parameter results are within the following ranges over three consecutive measurements (taken every 3 to 5 minutes), the well has been stabilized:

- pH ± 0.1 standard units
- Specific conductance ± 20 mV
- Temperature ± 0.1°C
- Turbidity ≤5 nephelometric turbidity units (NTU)

If the requirements for stable conditions are not met after a total of five well volumes have been removed, appropriate notations should be made in the field log and sampling should begin. Additional information concerning whether or not a well has stabilized can be found in the MPCA sampling protocol in Appendix C, Section 3.5, Purge and Stabilization. Based on the sensitive nature of the flow-through cell and dissolved oxygen probe, dissolved oxygen is not a stabilization parameter. The turbidity criteria to be used differs from Appendix C.

The field technician shall record all information (e.g., field parameter measurements, field observations, etc.) on the groundwater sample log sheets and field logbook as described in Section 4.3.5. Examples of field log sheets are provided in Appendix D.

Purging will be accomplished using submersible pumps (i.e., Grundfos pump). A calibrated bucket or other container will be used to measure the volume of water removed. Purged water will be placed in drums or tanks, and disposed of via the GWTF, pending permit restrictions and operator consent.

Monitoring well construction data are presented in Table 4-10. The data in this table will be supplemented with information on newly constructed wells as it becomes available. In the field,

TABLE 4-10

MONITORING AND EXTRACTION WELL CONSTRUCTION DATA
NIROP FRIDLEY, MINNESOTA
PAGE 1 OF 5

Well Number	Top of Casing Elevation (ft msl)	Well Depth (ft)	Nominal Well Diameter (in)
NIROP SHALLOW WELLS			
1-S	836.93	34.96	2
2-S	835.91	34.27	2
3-S	836.62	34.17	2
4-S	837.33	34.81	2
5-S	834.92	34.67	2
6-S	835.60	34.55	2
7-S	835.80	29.92	2
8-S	835.59	29.32	2
9-S	836.53	29.85	2
10-S	835.73	31.39	2
11-S	835.75	30.39	2
11-SB	837.28	39.44	2
12-S	838.38	34.50	2
13-S	834.40	34.30	2
14-S	835.82	33.65	2
14-IS	835.21	NA	?
15-S	834.68	34.10	2
16-S	837.12	35.13	2
17-S	835.48	38.18	2
18-S	833.86	40.07	2.5
19-S	834.18	44.88	2
20-S	837.51	35.45	2
21-S	837.50	36.74	2
22-S	837.60	37.95	2
23-S	846.96	42.60	2
24-S	836.19	36.78	2
25-S	835.14	37.75	2
26-S	834.06	NA	2
27-S	832.74	NA	2
AT-2	834.99	66.01	10
AT-4	836.44	NA	8
AT-5A	835.57	NA	8?
AT-7	836.30	40.41	8
AT-8	835.18	38.30	8
AT-9	836.82	53.81	8
MS-28S	834.81	27.30	2
MS-29S	834.68	27.26	2
MS-30S	834.83	27.45	2
MS-31S	834.81	27.49	2

TABLE 4-10

MONITORING AND EXTRACTION WELL CONSTRUCTION DATA
NIROP FRIDLEY, MINNESOTA
PAGE 2 OF 5

Well Number	Top of Casing Elevation (ft msl)	Well Depth (ft)	Nominal Well Diameter (in)
NIROP SHALLOW WELLS (Continued)			
MS-32S	834.76	26.11	2
MS-33S	834.72	27.05	2
MS-34S	834.31	26.76	2
MS-35S	834.22	26.77	2
MS-36S	834.80	44.70	2
MS-37S	834.21	47.73	2
MS-38S	834.64	41.69	2
MS-39S	834.76	41.27	2
MS-40S	834.61	40.74	2
MS-40I	834.64	60.44	2
MS-41S	834.82	43.41	2
MS-43S	834.42	38.86	2
MS-44S	833.53	35.70	2
MS-45S	832.13	34.90	2
MS-46S	831.67	35.86	2
MS-47S	834.83	39.90	2
MS-49S	834.16	39.92	2
MS-52S	833.14	40.04	2
USGS 1	835.63	40.69	2
USGS 2	837.39	40.52	2
USGS 3	834.24	44.89	2
USGS 4	831.84	45.47	2
USGS 5	832.86	44.85	2
USGS 6	836.83	39.95	2
USGS 7	835.47	45.22	2
USGS 8	836.10	44.96	2
USGS 9	836.50	44.88	2
NIROP INTERMEDIATE WELLS			
1-IS	835.12	77.65	2?
2-IS	837.89	77.11	2?
3-IS	837.21	77.21	2?
4-IS	833.34	76.73	2?
5-IS	837.86	63.69	2?
6-IS	836.53	NA	?
7-IS	837.02	NA	?
8-IS	836.65	NA	?
10-IS	836.87	NA	?
11-IS	NA	NA	NA
12-IS	834.94	NA	2

TABLE 4-10

MONITORING AND EXTRACTION WELL CONSTRUCTION DATA
NIROP FRIDLEY, MINNESOTA
PAGE 3 OF 5

Well Number	Top of Casing Elevation (ft msl)	Well Depth (ft)	Nominal Well Diameter (in)
NIROP INTERMEDIATE WELLS (Continued)			
13-IS	834.96	NA	2
15-IS	833.67	77.86	2
16-IS	832.77	NA	2
AT-1A	838.53	65.23	6
AT-3A	836.10	NA	8
AT-10	837.11	84.96	8
MS-28I	834.83	85.52	2
MS-29I	834.67	81.15	2
MS-30I	834.85	67.77	2
MS-31I	834.81	96.59	2
MS-32I	834.69	84.74	2
MS-33I	834.74	75.87	2
MS-34I	834.35	79.32	2
MS-35I	834.21	81.76	2
MS-36I	834.70	83.12	2
MS-41I	834.82	92.52	2
MS-42I	835.33	54.36	2
MS-43I	834.32	82.05	2
MS-44I	833.62	81.84	2
MS-45I	832.07	91.75	2
MS-46I	831.61	87.03	2
MS-47I	834.55	80.91	2
MS-49I	834.02	86.75	2
MS-51I	833.66	76.94	2
MS-52I	833.25	81.08	2
NIROP DEEP WELLS			
1-D	836.55	115.54	2
2-D	835.89	111.10	2
3-D	837.35	80.92	2
4-D	834.65	120.63	2
5-D	835.83	117.27	2
6-D	835.54	129.98	2
7-D	835.61	117.46	4
8-D	833.92	127.49	4
9-D	834.22	123.82	4
10-D	834.61	104.18	3
11-D	837.37	132.00	3
12-D	837.63	132.61	3
13-D	835.59	102.22	3

TABLE 4-10

MONITORING AND EXTRACTION WELL CONSTRUCTION DATA
NIROP FRIDLEY, MINNESOTA
PAGE 4 OF 5

Well Number	Top of Casing Elevation (ft msl)	Well Depth (ft)	Nominal Well Diameter (in)
NIROP DEEP WELLS (Continued)			
14-D	837.75	93.04	3
15-D	834.01	NA	?
16-D	833.08	NA	2
17-D	835.24	NA	?
AT-5B	835.62	NA	8
MS-28D	834.80	114.69	2
MS-29D	834.69	136.67	2
MS-30D	834.81	99.33	2
MS-31D	834.81	127.19	2
MS-32D	834.75	126.20	2
MS-33D	834.76	120.29	2
MS-34D	834.35	135.30	2
MS-35D	834.45	132.66	2
MS-35DPZ	834.26	131.74	2
MS-36D	834.79	134.16	2
MS-40D	834.70	135.25	2
MS-41D	834.89	134.57	2
MS-43D	834.27	112.94	2
MS-44D	833.58	119.87	2
MS-47D	834.51	132.35	2
MS-49D	833.87	129.19	2
MS-52D	833.27	140.03	2
USGS 10	836.85	130.30	2
NIROP BEDROOK WELLS			
1-PC	836.93	207.92	8.0-4.0
2-PC	837.91	178.08	8.0-4.0
3-PC	838.53	159.58	8.0-4.0
4-PC	834.63	182.21	8.0-4.0
5-PC	834.33	192.84	8.0-4.0
MS-48PC	831.5	166.9	2
MS-50PC	833.88	172.12	2
MS-53PC	832.64	169.16	2
Fridley Well 13	NA	NA	NA
NIROP ACP OIL INJECTION WELLS			
PES-CW-1	832.01	42.93	2
PES-CW-2	833.02	43.04	2
PES-CW-3	835.47	42.86	2
PES-MW-1	832.49	47.79	3
PES-MW-2	832.41	47.68	3

TABLE 4-10

MONITORING AND EXTRACTION WELL CONSTRUCTION DATA
NIROP FRIDLEY, MINNESOTA
PAGE 5 OF 5

Well Number	Top of Casing Elevation (ft msl)	Well Depth (ft)	Nominal Well Diameter (in)
NIROP ACP OIL INJECTION WELLS (Continued)			
PES-MW-3	832.80	42.74	3
PES-MW-4	832.57	42.72	3
PES-MW-5	832.60	42.89	3
PES-MW-6	832.41	47.71	3
PES-MW-7	832.58	52.78	3
PES-MW-8	832.64	42.80	3
PES-MW-9	832.85	42.73	3
PES-INJ-1	832.42	47.84	3
PES-INJ-2	832.87	52.96	3
PES-INJ-3	832.71	52.73	3
PES-BG-1	832.75	46.87	3
BG-2	832.73	47.03	3
BG-3	832.56	46.84	3
UNITED DEFENSE LP WELLS			
UD63-S	837.00	32.09	2
MISCELLANEOUS USGS WELLS			
MWW1	818.52	56.49	2.0
MWW2	819.49	20.50	?
MWW3	836.14	41.07	?
MWW4	832.01	57.80	2.0
MWW5	831.39	NA	?
MWW6	831.05	29.55	2.0
MWW9	833.29	24.00	2.0
MWW10	822.01	28.60	?
MWW11	820.65	58.25	2.0
MWW12	833.40	63.00	2.0
MWW13	833.33	33.06	2.0
MWW14	836.25	54.85	2.0
MWW15	834.81	27.50	2.0
MWW16	814.35	70.00	2.0
MWW17	814.37	28.00	2.0
MWW18	819.22	73.00	2.0
MWW19	820.60	30.70	2.0
MWW20	811.01	44.00	2.0
MWW21	809.87	2.00	2.0

NA = Not available.
? = Information unclear or incomplete.
msl = Mean sea level.

personnel will use pre-calculated conversion formulas to determine the number of gallons that must be removed to perform purging. The calculation for a well volume is depth to bottom minus depth to water times the pre-calculated gallons per linear foot of casing. These values are as follows:

- 2-inch diameter well - 0.163 gallon per linear foot
- 3-inch diameter well - 0.367 gallon per linear foot
- 4-inch diameter well - 0.653 gallon per linear foot

Additional information on well purging and field tests is provided in Appendix C.

Extraction Wells

The groundwater extraction wells are continuously pumping; therefore, well stabilization tests and additional purging will not be performed.

Fridley Well No. 13

Well purging will be conducted by City of Fridley employees. Well stabilization as previously described for monitoring wells will be performed as accurately as possible based on field conditions. A flow volume totalizer at the pump house will be used to record the water volume pumped for purging. The anticipated pumping rate is approximately 1,000 gallons per minute.

4.3.3 Sample Collection

The sampling techniques for all groundwater monitoring associated with the groundwater extraction and treatment system evaluation at the NIROP will be conducted in accordance with information presented in Sections 4.3.1.2 and 4.3.2.2. Tables 4-3, 4-4, and 4-5 provide a summary of the monitoring program for groundwater.

4.3.3.1 Monitoring Wells

To ensure that the water sample being collected is representative of in-situ water, the samples will be collected immediately after the well has been purged. The same pump and placement of the pump used for purging will be used for sample collection. The flow rate from the pump will be the same as was used during purging. The purging methods and pumping rates are discussed in greater detail in Section 4.3.2.2. Procedures for sampling monitoring wells are as follows:

- Verify that sufficient vials are available for each sampling location and that each is properly labeled in accordance with Section 4.3.4.

- Immediately fill the sample vial by allowing the water stream from the pump tubing to strike the inner wall of the vial to minimize formation of air bubbles. Do not rinse the sample vial. The sample should be collected to prevent excessive amounts of agitation and aeration and with a minimum of splashing. Fill each vial until the water forms a positive meniscus at the brim. Allow the vial to overflow slightly before capping. After capping, invert each vial and visually inspect for air bubbles. If air bubbles are present, discard the vial, and repeat the previous steps using a new vial. If no bubbles are present, place samples on ice in cooler immediately and record the appropriate field information on the field logsheets shown in Appendix D. Containers, preservatives, and holding times used for sample collection are shown in Table 4-7. Additional information on groundwater sample collection is provided in Appendix C.

4.3.3.2 Extraction Wells

Sampling procedures for the groundwater extraction wells are the same as those described in Section 4.3.3.1 for monitoring wells with the exception that the samples will be collected from a sampling port rather than from the pump discharge tubing. The first portion (5 to 10 seconds) of water from the tap will not be sampled and will be collected in a bucket, emptied into a drum, and disposed of as investigation derived waste (IDW). The flow rate from the sampling port will be adjusted to as low as possible for sample collection.

4.3.3.3 Fridley Well No. 13

Sampling procedures will be the same as those described in Section 4.3.3.2 for groundwater extraction wells.

4.3.3.4 Field QA/QC Samples

Field QA/QC samples include equipment rinsate blank, duplicate, and matrix spike (MS)/matrix spike duplicate (MSD) samples (see Table 4-11).

Field equipment rinsate blank and field duplicate samples will be collected and analyzed to assess the quality of the data resulting from the field sampling program. All QA/QC samples will be collected in the same type of container and with the same preservation requirements as the primary groundwater samples. QA/QC samples will be collected at sampling points suspected of having relatively high levels

TABLE 4-11

SUMMARY OF GROUNDWATER MONITORING PROGRAM QA/QC SAMPLING
NIROP FRIDLEY, MINNESOTA

Sample Type	Analytical Parameters[1]	Analytical Method	No. of Samples	No. of Field Duplicates[2]	No. of Rinsate Blanks[3]	No. of Trip Blanks[4]	No. of MS/MSD Samples	Frequency[5]
Monitoring Well	VOCs	SW-846 8260B	44	5	4	4	3	Varies per well
Extraction Well	VOCs	SW-846 8260B	7	1	0	1[6]	1	Twice a year
Fridley Well No. 13	VOCs	SW-846 8260B	1	1	0	1[6]	1	Once a year

Notes:

1 VOCs – volatile organic compounds (see Table 4-1); QA/QC samples not collected for field parameters.
2 The number of field duplicate samples collected varies per the sampling event.
3 Equipment rinsate blanks will be collected once daily during monitoring well sampling. Rinsate blanks will not be collected during sampling of extraction wells and Fridley Well No. 13 as these wells have dedicated pumps in place.
4 The number of trip blanks is estimated. One cooler containing VOC samples per day is anticipated.
5 See Table 4-5 for more information.
6 Trip blank shown for groundwater extraction well and Fridley Well No. 13 is intended for sampling rounds if only these wells are sampled. When more than one type of well is sampled (monitoring well, extraction well, Fridley well), additional trip blanks are not required, as long as the rate of one trip blank per cooler is met.

of contamination to provide meaningful information for blank or duplicate sample evaluation. They will be analyzed for the same parameters (i.e., VOCs) as the groundwater samples. Field QA/QC samples are not analyzed for field parameters. All rinsate blank and duplicate samples will be assigned identification aliases on the sample bottle label and on the chain-of-custody (COC) form to avoid alerting laboratories that the sample is a blank or replicate sample. The identity of the blank and duplicate samples will be recorded in the field sampling log.

Trip blanks are used to assess the potential for VOC cross contamination of samples caused by contaminant migration during sample shipment and storage. Trip blanks will be filled and sealed by the laboratory with laboratory-controlled, analyte-free water. Trip blank sample vials will travel with the actual sample vials to and from the field in the cooler, to the well head, etc., so that the blanks are exposed to precisely the same conditions as the actual samples. The trip blanks will never be opened in the field. One set of trip blanks will be returned to the laboratory with each cooler containing samples for VOC analysis.

Equipment rinsate (or field) blanks will be obtained under representative field conditions by collecting the rinse water generated by running analyte-free water through sample collection equipment after decontamination and prior to use. Collection of rinsate blanks should be conducted to simulate actual field sampling methods in a manner that would detect the presence of background or cross contamination of samples from the ambient environment, preservatives, or sampling equipment. An effort will be made to have the blank sample water contact all equipment surfaces that the sample water will contact. Equipment rinsate blanks will be collected at a frequency of one rinsate blank per day of sampling.

Field duplicate samples will be collected to evaluate variability of sampling and analytical methods. Field duplicate samples are two samples collected independently at a sampling location. The field duplicate will be collected immediately after the primary groundwater sample is collected. Field duplicate samples will be collected at a frequency of one duplicate per 10 groundwater samples.

In addition to field blanks and field duplicates, MS samples will be collected. Matrix spikes provide information about the effect of the sample matrix on the extraction and measurement methodology. Matrix spikes are performed in duplicate and are referred to as MS/MSD samples. These analysis are performed as internal (i.e., laboratory) QC checks. To accommodate these laboratory QC samples, the field crew must provide extra aliquots of sample as required. These extra sample aliquots will be identified with the same sample location information as the selected groundwater sample(s). MS/MSD samples will be provided to the laboratory with a frequency of one set per 20 groundwater samples.

4.3.4 Investigation Derived Waste Handling

It is anticipated that the field investigation will generate three types of IDW; personal protective equipment (PPE), sampling equipment decontamination fluids, and purge water. Based on the activities and types of contaminants present, none of the residues are expected to represent a significant risk to human health or the environment if properly managed. All PPE will be double-bagged and disposed of appropriately. Unless written permission is received, the O&M contractor shall not deposit these materials in dumpsters owned by the Navy or other site entities. All purge water will be disposed by pumping into a GWTF pump house located on Navy property.

4.3.5 Documentation

4.3.5.1 Sample Identification

Groundwater sample identification numbers will be unique and will correspond with individual well identifiers. Well identifiers will be preceded with the letters "MS," except well FMC-33, the groundwater extraction wells (AT-7, AT-8, etc.), and Fridley Well No. 13, to facilitate the computer database management system. Example sample designations for the exceptions will be as follows:

- FMC-33 FMC33
- Fridley Well No. 13 FW13
- AT-3A AT03A
- AT-5A AT05A
- AT-5B AT05B

COC entries and the database management system will not use the dash (-) in the well identification. Quality control samples will be labeled as "QC" samples, followed by a letter that designates the type of sample and a sequential number beginning with 01. QC samples will be "blind" samples used as a QC check on field and laboratory procedures.

Field duplicate samples will be labeled with "D" following the QC prefix and numbered sequentially (QCD01, QCD02, etc.). The locations of duplicate samples will be recorded in field notebooks, on the COC forms not submitted to the laboratory, and groundwater sample logsheets (Appendix D).

Trip blanks will be labeled with "T" following the QC prefix and numbered sequentially (QCT01, QCT02, etc.).

Equipment rinsate (field) blanks will be labeled with "R" following the QC prefix and numbered sequentially (QCR01, QCR02, etc.).

Sequential numbering of duplicates and blanks will be re-initiated at "01" during each sampling round because sample dates will be used to distinguish between sampling events in the computer data files.

Samples that have extra aliquots for MS/MSD analysis will be noted on the COC form.

Sample labels will be completed for each sample using waterproof ink unless prohibited by weather conditions. For example, a logbook notation would explain that a pencil was used to fill out the sample label because the ballpoint pen would not function in freezing weather.

4.3.5.2 Chain-of-Custody

The possession of samples must be traceable from the time of collection using COC procedures. Specific COC forms must accompany all sample shipping containers to document the transfer of the shipping containers and samples from the field to the laboratory receiving the samples for analysis. The field sampler is personally responsible for the care and custody of the samples until they are transferred or properly dispatched. As few people as possible should handle the samples.

An example COC form is provided in Appendix D. The actual form may differ slightly according to the laboratory used. When filling out the COC form, it is important to use only black ink and to write legibly. Errors are to be corrected by drawing a single line through the incorrect information and entering the correct information. All corrections are to be initialed and dated by the person making the corrections. This procedure also applies to words or figures inserted or added to a previously recorded statement. A checklist of information that must be included on the COC form is provided in Appendix B of the QAPP.

4.3.5.3 Field Activity Documentation and Logbooks.

The field logbook and field logsheets will provide the means of recording the data collection activities performed. As such, entries will be described in as much detail as possible so that subsequent data users could reconstruct field activities from the documented information only. Field logbooks are discussed below, and examples of field data logsheets are in Appendix D.

Field logbooks will be bound field survey books or notebooks. Three-ring binders may not be used. Each logbook will be identified by a project-specific number. The title page of each logbook will contain the following:

- Name of the person(s) to whom the logbook is assigned
- Logbook number
- Project name
- Project start date
- Project completion date

Entries into the logbook will contain a variety of information. At the beginning of each entry, the date, start time, weather conditions, names of all sampling team members present, level of personal protection being used, and the signature of the person making the entry will be entered. The names of visitors to the site, field sampling or investigative team personnel, and the purpose of their visit will also be recorded in the field logbook.

Whenever a sample is collected or a measurement is made, a detailed description of the station, including compass and distance measurements, shall be recorded. All entries will be made in indelible black ink, and no erasures will be made. If an incorrect entry is made, the information will be crossed out with a single strike mark, dated, and initialed by the person making the correction. The number and description of photographs taken, if any, will also be noted. All equipment used to make measurements will be identified, along with the date of calibration. The identification of equipment should include make and model and serial number of all pumps and field meters and the type of any electrodes used.

The following sampling information will also be recorded: make and model of pump; the time of sampling; a sample description; the volume of sample removed from the well; and the number, type, and size of containers, including the type of preservative in each container. Field duplicate samples, which will receive an entirely separate sample identification number, will be noted in the sample description.

Additional information on field documentation is provided in Appendix C, Section 5.0.

4.3.6 Sample Preservation, Handling, and Transportation

This section describes procedures that will be followed between the time samples are collected and the time they are either shipped or delivered to an analytical laboratory.

Samples will be preserved as shown in Table 4-7. All samples will be thermally preserved in the field immediately after sample collection by placing samples in an insulated cooler containing regular ice. Particular care will be taken to assure that paper work and sample labels are not damaged by water.

Regular ice, if used, will be placed inside uncontaminated leak-proof plastic containers, and the COC record and other paper work will be placed inside a Ziplock™ bag.

All coolers will be accompanied by a COC form and will contain a complete address and return address on both inside and outside of the chest. The samples will be maintained at approximately 4°C during transport to the laboratory. To ensure this, a temperature blank will be included in each cooler shipped. Before transporting samples, field personnel will perform the following tasks:

- Verify that laboratory personnel will be present to receive samples when they arrive.
- Verify that laboratory personnel understand COC and sample storage and preservation requirements.
- Check labeling and documentation to ensure that sample identify will be clear to laboratory personnel.
- Hand deliver or ship samples in a manner that ensures samples will remain cool (approximately 4°C) until received by laboratory personnel.
- Maintain COC according to procedures described in Section 4.3.5.

Procedures to be implemented for sample shipment and transfer of custody are as follows:

- Prepare sample containers with pre-applied labels.
- Properly identify and label each sample in the field with indelible, waterproof, black ink.
- Complete COC forms in the field. Indicate sample identification, containers filled, sampling date, sampling time, sample collector's name, and sample preservation. This information will also be noted in the field notebooks maintained for the site.
- Repack shipping containers with samples, COC forms, and ice packs. Each set of samples to be shipped together in a single shipping container is assigned a COC form that travels with the shipping container.
- Include a temperature blank in each cooler.
- Place the COC form in a Ziplock™ bag, seal the bag, and tape it to the inside cover of the cooler.
- Seal and ship containers to the appropriate laboratory. Common carriers or intermediate individuals shall be identified on the COC forms. Copies of all bills-of-lading will be retained.

- Ship by overnight delivery service to the approved laboratory. The correct laboratory shipping address will be confirmed with the laboratory prior to shipment.

The laboratory will receive and check the shipping containers for broken seals or damaged sample containers. If no problems are noted, samples will be logged into the laboratory. The COC form is completed when laboratory personnel sign the form. The laboratory will include a copy of the completed COC form with the analytical data report.

Additional information on sample handling is provided in Appendix C.

4.4 DATA REDUCTION AND VALIDATION

4.4.1 Data Reduction and Validation

4.4.1.1 Field Measurements and Activities

Raw data from field measurements and sample collection activities will be appropriately recorded in the field logbook. Data will include water level measurements and readings, flow rate readings, pH, specific conductance, turbidity, and temperature. Reduction of field data will consist of transferring data from the field notebooks for use in AMRs and other documents. Validation will consist of cross-checking log versus report entries.

4.4.1.2 Laboratory Data

Data validation consists of a stringent review of the chemical analytical data packages generated by the laboratory. Sample handling and receipt, observance of maximum holding time allowances, performance of the analytical method employed, accuracy of data reporting, and completeness of the deliverables generated are evaluated. Data validation also considers the impact of field-related QC checks. The overall purposes of data validation are to access the validity of the data generated with respect to pre-established criteria and to generate a report detailing noncompliance that warns potential users of limitations in data utility.

Data generated by the laboratory will be validated by qualified chemists in accordance with the most recent edition of the USEPA National Functional Guidelines for Evaluating Organic Analysis, method-specific QC criteria, and the QC limits established by the laboratory QA plan. Professional judgement will also be used. Data validation reports summarizing non-compliant items will be generated, and qualifier flags will be applied to data to alert users of limitations in utility.

Laboratory data generated for the NIROP Fridley remedial action will be computerized in a format organized to facilitate data review and evaluation. The computerized data set will include the data qualifier flags from data validation and the additional comments of data reviewers.

4.5 REPORTING AND RECORD KEEPING

Reporting requirements described in the following section are based on the FFA, the previous RAMP, and past AMR.

4.5.1 Periodic Monitoring Reports and Progress Reports

The Navy shall submit the analytical and water level results to the USEPA and the MPCA following sampling. This information may be presented and recorded during regularly scheduled Restoration Advisory Board (RAB) meetings.

Per the FFA, the Navy will submit to the USEPA and the MPCA quarterly written progress reports, which may take the form of RAB meeting minutes, that describe the actions the Navy has taken during the previous 3 months to implement the requirements of the FFA. Progress reports shall also describe the activities scheduled to be completed during the upcoming quarter. The progress reports shall include a detailed statement of the manner and extent to which the requirements of the FFA are being met. In addition, the progress reports shall identify any anticipated delays in meeting deadlines or target dates, the reason(s) for the delay(s) and actions taken to prevent or mitigate the delay(s), and any need for additional work.

4.5.2 Annual Monitoring Report

The Navy will submit an AMR to the USEPA and MPCA during each year after startup of the groundwater extraction system as required by the FFA. The AMRs will include the following items related to groundwater remediation:

- A description of the current groundwater remediation facilities and any planned modifications.
- Results of all groundwater and river water elevations for the previous year.
- Hydraulic head maps of water table elevations and piezometric surface elevations for the lower sand unit (deep monitoring wells) and bedrock.

- Evaluation of hydraulic containment effectiveness of the extraction well system based on hydraulic head information, capture zone modeling, and chemical trends.

- A map showing the location of each monitoring well and extraction well.

- Iso-concentration maps and cross-sections (with a cross-section locator map) for TCE developed from the results of the last groundwater sampling round performed each year for all monitoring wells in the approved monitoring network.

- Graphs illustrating TCE concentrations over time using data from each sampling event. The graphs will be cumulative showing groundwater quality for all previous years during extraction system operations as well as the reporting year.

- Laboratory results from chemical analyses of all groundwater samples.

- Evaluation of the statistical significance of groundwater quality data, if applicable.

- QA/QC summary of chemical water quality data including precision, accuracy, and completeness.

- Evaluation of the suitability of the monitoring well network including the need for addition or deletion of monitoring wells.

- Summary of extraction system operation and maintenance.

- Summary of treatment system operation and maintenance.

- A monitoring plan for the next year with an assessment of the monitoring parameters and sampling frequencies.

- Quarterly Progress Reports.

The suitability of individual monitoring wells to assess groundwater quality will be evaluated in each AMR. Hydraulic and chemical monitoring data for each well will be used to assess whether continued use of each well is necessary and appropriate for the overall objectives of the monitoring program. The evaluation will also assess whether additional existing wells need to be added to the monitoring network.

If revisions to the monitoring well network are determined to be appropriate, the recommended changes will be included in the AMR. Review and approval of recommended revisions will be obtained from the USEPA and MPCA prior to implementation of changes to the monitoring well network.

Hydraulic containment will be achieved when it can be demonstrated that groundwater gradients in areas within the contaminated groundwater zone are effectively directed toward an extraction well (horizontally and vertically) and as defined in the NIROP Partnering Team DQO meetings. Evaluation of the effectiveness of hydraulic containment will be re-evaluated annually. Groundwater chemistry data will be used to support the evaluation of containment effectiveness, as appropriate. Maps, tables, and/or graphs that depict water table and piezometric head contours will be compared to historical data to estimate the extent of the radius of influence of the groundwater extraction system. Demonstration of containment by measured hydraulic heads may be complemented by use of a 3-dimensional groundwater flow model that has been calibrated to actual site conditions. The model will be used to evaluate whether hydraulic containment has been or will be achieved.

4.5.3 Retention of Records

All documents contained in the Administrative Record, the Public Information Repository, and all final primary and secondary documents as defined in the FFA, shall be preserved by the Navy (and other agencies) for a minimum of 10 years after termination of the FFA. The RAWP is defined as a primary document, and sampling and data results are defined as secondary documents. Therefore, the Navy will retain all groundwater monitoring results for at least 10 years after the FFA is terminated. The FFA can be terminated when the Navy, with USEPA and MPCA concurrence, determines that any final remedial action has been completed in accordance with the requirements of the FFA.

5.0 NPDES/SDS EFFLUENT MONITORING

5.1 OBJECTIVES

The objective of effluent monitoring is to confirm compliance with discharge limitations in NPDES/SDS Permit MN0000710 issued to UDLP. The permit is for all direct discharges from NIROP Fridley to the Mississippi River. This permit was issued on October 31, 1996 and reviewed in September 2000. This section discusses only monitoring at Outfall 020 where the effluent from the GWTF is discharged to the River. The parameters to be monitored, the discharge limits, and the frequency of monitoring for Outfall 020 are discussed in Section 5.2.

All samples collected to determine compliance with the permit shall be analyzed by En Chem, a laboratory certified by the Minnesota Department of Health as provided by Minnesota Rules Part 4740.2040, Certified Test Categories.

5.2 MONITORING LOCATIONS AND FREQUENCIES

The monitoring location (Outfall 020) is based on the NPDES/SDS permit. If the outfall is flooded because of a high water level in the Mississippi River, samples shall be collected from the nearest upgradient manhole (or other appropriate accessible location) that is not flooded. The permit states that samples taken in compliance with the monitoring requirements shall be at a point representative of the discharge to the river.

The discharge limitations and monitoring requirements for Outfall 020 are provided in Table 5-1. The flow rate is to be measured continuously, temperature is to be measured monthly, and iron and manganese are to be measured quarterly. Selected VOCs are to be measured twice a month, and full VOC analysis is to be conducted twice a year.

The permit states that twice monthly monitoring for VOCs is required for the first year of the discharge, after which the permittee may request a monitoring reduction. The request must be in writing and must receive the written approval of the MPCA. The permit states that monitoring reductions will only be granted if contaminant levels are consistently well below discharge limits. In addition, monitoring for iron and manganese may be eliminated after 1 year with the written approval of the MPCA.

TABLE 5-1

EFFLUENT LIMITATIONS AND MONITORING REQUIREMENTS
OUTFALL 020
NIROP FRIDLEY
FRIDLEY, MINNESOTA

Parameter	Daily Allowable Maximum	Measurement Frequency[1]	Sample Type
Flow (MGD)	--	Continuous Monitoring[2]	--
Temperature	26.5°C(80°F)	Monthly	Grab
Iron	--	Quarterly	Grab
Manganese	--	Quarterly	Grab
1,1-Dichloroethane	70 µg/L	Twice monthly	Grab
1,1-Dichloroethene	6.0 µg/L	Twice monthly	Grab
1,2-Dichloroethene (cis-)	70 µg/L	Twice monthly	Grab
1,2-Dichloroethene (trans-)	100 µg/L	Twice monthly	Grab
Tetrachloroethene	3.8 µg/L	Twice monthly	Grab
1,1,1-Trichloroethane	200 µg/L	Twice monthly	Grab
Trichloroethene	5.0 µg/L	Twice monthly	Grab
Vinyl chloride	NS	Twice monthly	Grab

Notes:

1 Twice monthly monitoring for VOCs is required for the first year after startup of the discharge from the groundwater remediation system. Monitoring for iron and manganese may be eliminated after 1 year of monitoring with written approval of the MPCA.

2 For brief periods of flow meter maintenance and other down time (e.g., 1 to 3 day several times per year), alternative methods of flow measurements may be used as long as such methods provide representative flow measurements.

NS = Not specified.
MGD = Million gallons per day

Other Requirements:

Complete VOC monitoring shall be conducted on the effluent twice annually. EPA Methods 601 and 602 shall be used for all analyses.

The pH shall not be less than 6.0 nor greater than 9.0 and shall be monitored by grab samples analyzed immediately. These upper and lower limits are not subject to averaging and shall be met at all times.

There shall be no discharge of floating solids or visible foam in other than trace amounts.

The discharge shall not contain oil or other substances in amounts sufficient to create a visible color film on the surface of the receiving water.

The discharge shall not contain significant color in amounts sufficient to create a visible discoloration of the receiving water at the point of discharge.

5.3 SAMPLING PROTOCOL

5.3.1 Preparation

5.3.1.1 Analysis, Bottleware, and Preservation Requirements

The effluent samples will be analyzed in the laboratory for VOCs, iron, and manganese and analyzed in the field for flow and temperature. The specific VOCs and metals and the associated PQLs are provided in Table 5-2. Laboratory-supplied sample containers and preservatives are to be used for all effluent samples. Table 5-3 provides a summary of the sample analyses, sample containers, preservation methods, holding times, and analytical methods.

Additional information on sample containers and preservation is provided in Appendix B.

5.3.1.2 Sampling Equipment

Effluent samples will be collected using a pre-cleaned stainless steel or glass beaker or similar device and then transferred to the sample bottle(s). If the flow rate is low enough and pre-preserved sample bottles are not used, it may be possible to fill the sample bottle directly.

5.3.1.3 Quality Assurance for Field Procedures

Particular care will be exercised to avoid the following common ways in which cross contamination or background contamination may compromise effluent samples:

- Improper storage or transportation of equipment.
- Contaminating the equipment or sample bottles on site by setting them on or near potential contamination sources such as uncovered ground, a contaminated vehicle, or vehicle exhaust.
- Handling bottles or equipment with dirty hands or gloves.
- Inadequate cleaning of sampling devices.
- Placing equipment directly onto the ground surface.

Field QA procedures to evaluate potential cross contamination are described in Section 5.3.2.

TABLE 5-2

PRACTICAL QUANTITATION LIMITS – EFFLUENT PARAMETERS
NIROP FRIDLEY, MINNESOTA

Analyte	Analytical Method	PQL (µg/L)
METALS		
Iron	SW-846 6010B	50[1]
Manganese	SW-846 6010B	3[1]
VOCs		
1,1-Dichloroethane[2]	USEPA 601	1
1,1-Dichloroethene[2]	USEPA 601	1
1,2-Dichloroethene (cis-)[2][3]	USEPA 601	1
1,2-Dichloroethene (trans-)[2]	USEPA 601	1
Tetrachloroethene[2]	USEPA 601	1
1,1,1-Trichloroethane[2]	USEPA 601	1
Trichloroethene[2]	USEPA 601	1
Vinyl Chloride	USEPA 601	1

Notes:

1 Typical instrument detection limit.
2 These compounds are monitored twice a month. All VOCs are monitored twice a year.
3 Compound is not on the USEPA Method 601 or 602 target list; however, the permit mandates that USEPA Methods 601 and 602 be used for all VOC analysis.

TABLE 5-3

BOTTLEWARE, PRESERVATION, AND HOLDING TIME REQUIREMENTS
EFFLUENT SAMPLES
NIROP FRIDLEY, MINNESOTA

Analytical Parameter	Analytical Method	Number of Containers	Type of Container	Preservation Requirements	Holding Time
Permit-specified VOCs[1]	USEPA 601	2	40 mL glass vial	HCl to pH < 2; Cool to 4°C	14 days
Full VOCs[2]	USEPA 601 and 602	3	40 mL glass vial	HCl to pH < 2; Cool to 4°C	14 days
Iron and Manganese	SW-846 6010B	1	250 mL HDPE	HNO3 to pH < 2	6 months
pH and Temperature	Field measurement	NA	NA	NA	Analyze immediately

Notes:

1 Includes 1,1-dichloroethane; 1,1-dichloroethene; 1,2-dichloroethene (cis- and trans-); methylene chloride; tetrachloroethene; 1,1,1-trichloroethane; and trichloroethene.

2 See Table 5-2 for full EPA 601/602 monitoring list.

VOCs – Volatile Organic Compounds.
mL – milliliter.
HDPE – High-density polyethylene.
HCl – Hydrochloric acid.
HNO3 – Nitric acid.
NA – Not applicable.

5.3.1.4 Decontamination, Storage, and Transport of Equipment

It is important not to contaminate or alter the sample during collection. The sampling devices must be clean. Clean outer garments will be accessible to field personnel in an area free from potential contamination. Water, soap, and paper towels will also be kept in a clean location for both regular clean-up and emergency use. Personnel decontamination procedures are as follows:

- Protective disposable outer garments will be removed and placed in disposable plastic bags at the perimeter of the exclusion zone (vicinity of the outfall) before each departure from the exclusion zone.

- If disposable outer boots are worn, they will be removed first then gloves will be removed. If reusable rubber or neoprene boots are worn, they will be washed and rinsed before leaving the contamination reduction zone.

- Field personnel will wash and dry their hands and all exposed surfaces before leaving the contamination reduction zone. Used paper towels will be placed in the disposal bag.

- The plastic bags containing waste materials will be disposed daily. Unless written permission is received, the O&M contractor shall not deposit these materials in dumpsters owned by the Navy or other site entities.

Decontamination of sampling equipment will not be required because this equipment will be pre-cleaned or dedicated and will only be used to collect samples at one location. The pH meter probe and thermometer will be triple-rinsed with distilled water before and after each use. Sample bottles will be pre-cleaned by the manufacturer.

5.3.2 Sample Collection and Field Tests

Table 5-4 provides a summary of the monitoring program for effluent.

5.3.2.1 Effluent Samples

Methods for determining pH and temperature are described in Appendix B.

Procedures for sampling the discharge from Outfall 020 are as follows:

TABLE 5-4

SUMMARY OF EFFLUENT MONITORING PROGRAM QA/QC SAMPLING
NIROP FRIDLEY, MINNESOTA

Analytical Parameters	No. of Samples	No. of Field Duplicates	Number of Rinsate Blanks(1)	Number of Trip Blanks(2)	No. of Matrix Spike/Matrix Spike Duplicates
Permit-specified VOCs(3)	1	1	0	1	1
Full VOCs(4)	1	1	0	1	1
Iron and Manganese	1	1	0	NA	1
Temperature and pH	1	0	0	NA	NA

Notes:

1 Rinsate blanks will not be collected because only one location is sampled, and disposable or pre-cleaned sampling equipment will be used.
2 Assumes only effluent samples are being collected. If groundwater and/or surface water samples are being collected during the sampling event, additional trip blanks may not be required at a rate of one trip blank per cooler.
3 Permit-specified VOCs: 1,1-dichloroethane; 1,1-dichloroethene; 1,2-dichloroethene (cis- and trans-); methylene chloride; tetrachloroethene; 1,1,1-trichloroethane; and trichloroethene.
4 See Table 5-2 for full USEPA 601/602 monitoring list.

VOC - Volatile organic compound.

- Verify that sufficient sample bottles are available and that each is properly labeled.

- Fill the sample bottles for metals analysis (if a quarterly sampling event).

- Fill the glass VOC sample vials. Do not rinse the sample vial. The sample should be collected to prevent excessive amounts of agitation and aeration and with a minimum of splashing. Fill each vial until the water forms a positive meniscus at the brim. Allow the vial to overflow slightly before capping. After capping, invert each vial and visually inspect for air bubbles. If air bubbles are present, discard the vial, and repeat the previous steps using a new vial.

- Place sample on ice in cooler immediately.

Containers, preservatives, and holding times used for sample collection are shown in Table 5-3.

Additional information on effluent sample collection is provided in Appendix B.

5.3.2.2 Field QA/QC Samples

Field QA/QC samples are the same as described in Section 4.3.3.4 for groundwater samples except that equipment rinsate blanks will not be required because there is only one sample location and pre-cleaned or dedicated sampling devices will be used.

5.3.3 Documentation

5.3.3.1 Sample Identification

The sample number for NPDES/SDS Outfall 020 is OUT020.

QC samples will be identified in the same manner as described for groundwater monitoring (Section 4.3.3.4) except that equipment rinsate blanks will not be required.

5.3.3.2 Chain-of Custody

COC procedures will be the same as described for groundwater monitoring (Section 4.3.5.2).

5.3.3.3 Field Activity Documentation and Logbooks

The procedures described in Section 4.3.5.3 for groundwater monitoring will also be used for effluent monitoring.

5.3.4 Sample Preservation, Handling, and Transport

Samples will be preserved as shown in Table 5-3. The other aspects of sample handling and transport are the same as described in Section 4.3.6 for groundwater monitoring.

5.4 DATA REDUCTION AND VALIDATION

Data reduction and validation procedures described for groundwater monitoring in Section 4.4.1 will also be used for effluent monitoring. In addition, laboratory data for metals (i.e., iron and manganese) will be validated in accordance with the most recent edition of the USEPA National Functional Guidelines for Evaluating Inorganic Analysis.

5.5 REPORTING AND RECORD KEEPING

Reporting requirements described in the following section are based on the FFA, the previous RAMP, and the NPDES permit.

5.5.1 Periodic Monitoring Reports and Progress Reports

The requirements for these reports are the same as described in Section 4.5.1.

5.5.2 Annual Monitoring Report

In addition to the information required in Section 4.5.2, NPDES/SDS monitoring results will be included in the AMR. The AMR will include an evaluation of compliance with NPDES/SDS permit conditions and Discharge Monitoring Reports (see Section 5.5.3). The O&M contractor will not be preparing this comprehensive report, but will be required to make information available to other Navy contractors in a timely fashion to support production of this report.

5.5.3 Monthly Reports

All monitoring results obtained following the provisions of the NPDES/SDS permit shall be summarized on a monthly basis and reported on the designated Discharge Monitoring Report Forms provided by the

MPCA. Reports shall be submitted and received or postmarked no later than the 21st day of the month following the month during which monitoring was completed. Reports shall be signed by an authorized representative of the permittee.

Signed copies of these reports shall be submitted to the MPCA at the following address (the Navy may request distribution of additional copies to various parties):

Minnesota Pollution Control Agency
520 Lafayette Road
St. Paul, MN 55155-4194
Attn: W.Q. Point Source Compliance

The results of the monitoring shall be reported in the units specified in the permit (same as presented in Tables 5-1 and 5-2). The reports or written statements shall be submitted even if no discharge occurred during the reporting period.

The report shall include the following:

- A description of any modifications to the wastewater collection, treatment, or disposal facilities
- Any substantial changes in operational procedures
- Any other significant activities that alter the nature or frequency of the discharge
- Any other material factors affecting compliance with the conditions of the permit

For each measurement taken or sample collected, the following information shall be recorded:

- The exact place, date, and time of sampling
- The dates the analyses were performed
- The person who performed each analysis
- The analytical techniques, procedures, and methods used
- The results of such analyses

5.5.4 Special Discharge Reports

Special discharge reports must be submitted to the MCES on a quarterly basis even when no discharge occurs. The requirements are substantially similar to the NPDES reports described in Section 5.5.3.

5.5.5 Performance Curves

The O&M contractor will tabulate site data to prepare the following performance curves for the Navy on a monthly basis:

- A plot of cost-per-gallons-treated versus time (months)
- A plot of cost-per-pound-of-contaminant-mass-removed versus time (months)
- A plot of cumulative-contaminant-mass-removed versus cumulative cost
- A plot of influent-contaminants-concentration versus time (months)

5.5.6 Records Retention

According to the NPDES/SDS permit, all records and documents that relate to the permit shall be retained for a minimum of 3 years; however, the records retention requirements (i.e., 10 years) provided in Section 4.5.3 supercede this permit requirement and will be followed.

REFERENCES

CH2MHILL, 2001. Revised Air Emission Estimates from the Groundwater Treatment Facility at NIROP Fridley, Minnesota, March.

Morrison Knudsen Corporation, 1999. Operations and Maintenance Manual, Groundwater Extraction and Treatment System, NIROP, Fridley, Minnesota, September.

Morrison Knudsen Corporation, 1998. Calculation of Site-Specific Allowable Emission Rates, Groundwater Treatment Facility, NIROP, Fridley, Minnesota, North Charleston, SC.

MPCA, 1996. Final Issuance National Pollution Discharge Elimination System/State Disposal System (NPDES/SDS) Permit MN0000710, St. Paul, MN, October 31.

RMT, Inc. (RMT), 1987. Remedial Investigation Report for the Remedial Investigation/Feasibility Study at the Naval Industrial Reserve Ordnance Plant, Fridley, Minnesota, Madison, WI.

RMT, 1988a. Addendum to the Remedial Investigation Report for the Remedial Investigation/Feasibility Study at the Naval Industrial Reserve Ordnance Plant, Fridley, Minnesota, Madison, WI.

RMT, 1988b. Feasibility Study Report for the Remedial Investigation/Feasibility Study at the Naval Industrial Reserve Ordnance Plant, Fridley, Minnesota, Madison, WI.

RMT, 1988c. Addendum to the Feasibility Study Report for the Remedial Investigation/Feasibility Study at the Naval Industrial Reserve Ordnance Plant, Fridley, Minnesota, Madison, WI.

RMT, 1992. Determination of Groundwater Contaminant System Effectiveness for the Naval Industrial Reserve Ordnance Plant, Fridley, Minnesota, Revision 0, Madison, WI, December.

RMT, 1995a. Remedial Action Workplan for Groundwater Remediation at the Naval Industrial Reserve Ordnance Plant, Fridley, Minnesota, Revision 3, Final, Madison, WI.

RMT, 1995b. Workplan for Improvement of Groundwater Containment System Effectiveness for the Naval Industrial Reserve Ordnance Plant (NIROP), Fridley, Minnesota, Final, Madison, WI, January.

Tetra Tech NUS, Inc. (TtNUS), 2000. 1999 Annual Monitoring Report, Naval Industrial Reserve Ordnance Plant, Fridley, Minnesota, March.

TtNUS, 2002. 2001 Annual Monitoring Report, Naval Industrial Reserve Ordnance Plant, Fridley, Minnesota, March.

USEPA, 1988a. Guidance on Remedial Actions for Contaminated Groundwater at Superfund Sites, EPA/540/G-88-003, OSWER Directive 9283, Office of Emergency and Remedial Response, Washington, DC.

USEPA, 1988b. Statistical Methods for Evaluating the Attainment of Superfund Cleanup Standards; Volume 2: Groundwater, Draft 2.0.

USEPA, 1990. Record of Decision for Groundwater Remediation at the Naval Industrial Reserve Ordnance Plant, Fridley, Minnesota, Region 5, Chicago, IL.

USEPA, 1998. Five Year Review Report, Naval Industrial Reserve Ordnance Plant Site, Fridley, Minnesota, Pursuant to CERCLA, Region 5, Chicago, IL.

APPENDIX A

NPDES/SDS PERMIT AND
MCES INDUSTRIAL DISCHARGE PERMIT

The Navy has an outstanding permit modification request for the MCES permit. The permit modification request is attached here in place of the MCES permit.

The Navy has submitted a NPDES permit renewal application as required to replace the now-expired NPDES permit. The permit application has not yet been processed by the MPCA. The permit renewal application is attached here in place of the expired NPDES permit.

When available, copies of the actual MCES permit and the NPDES permit should be attached here and the permit modification request and permit renewal application should be removed.

DEPARTMENT OF THE NAVY
SOUTHERN DIVISION
NAVAL FACILITIES ENGINEERING COMMAND
P.O. BOX 190010
2155 EAGLE DRIVE
NORTH CHARLESTON, S.C. 29419-9010

5090
Code 1868
April 20, 2000

Mr. Michael V. Flaherty, P.E.
Metropolitan Council Environmental Services
Industrial Waste and Pollution Prevention Section
230 East Fifth Street
St. Paul, MN 55101-1633

Subj: MCES SPECIAL DISCHARGE PERMIT NO. 2154 – REQUEST FOR LOW IMPACT/CONTINGENCY PERMIT STATUS FOR NAVAL INDUSTRIAL RESERVE ORDNANACE PLANT, FRIDLEY, MN

Dear Mr. Flaherty:

Please find the attached request for Low Impact/Contingency Permit Status for NIROP Fridley.

Should you have any questions or comments, please contact me at (843) 820-5562.

Sincerely,

JOEL R. SANDERS, P.E.
Remedial Project Manager
Installation Restoration II Branch

Encl:
(1) Request for Low Impact/Contingency Status

Copy To:
UDLP (Doug Hildre)
TTNUS (Mark Sladic)
Bay West (Paul Walz)
NAVSEA Tech Rep (Kerry Morrow)

Metropolitan Council Environmental Services
Industrial Waste & Pollution Prevention Section
230 East Fifth Street
St. Paul, Minnesota 55101-1633

Request for Low Impact/Contingency Permit Status

Permit Number: MCES 2154

Site Name: NAVAL INDUSTRIAL RESERVE ORDNANCE PLANT
DEPT OF THE NAVY
4800 EAST RIVER ROAD
FRIDLEY, MN 55421

I hereby request that above site's Industrial Discharge Permit be changed to Low Impact/Contingency permit status.

Responsible Person: JOEL R. SANDERS, P.E.
(PRINT)

Responsible Person: Joel R. Sanders
(Signature)

Date: 4/20/2000

COMMANDING OFFICER
ATTN CODE 1868 JOEL SANDERS
SOUTHNAVFACENGCOM
PO BOX 190010
NORTH CHARLESTON SC 29419-9010

Metropolitan Council
Working for the Region, Planning for the Future

Environmental Services

Date: March 15, 2000

To: Special Discharge Permittees:Contaminated Groundwater Sites

Re: Low Impact/Contingency Status

This letter is to notify Permittees who discharge contaminated groundwater to the Metropolitan Disposal System (MDS) of a change to the MCES Leachate & Contaminated Groundwater Program. Currently, Permittees are required to submit quarterly self-monitoring reports to MCES as a requirement of their permit. The program change will reduce the reporting requirements for Permittees classified as Low Impact/Contingency Status by MCES. This change will reduce reporting and monitoring requirements, which will result in cost savings for both Permittees who qualify and for MCES.

To be considered for Low Impact/Contingency Status, Permittees must request that MCES reduce their reporting requirement to annual and must meet the following conditions, as well as be able to maintain these conditions for the duration of the revised permit:

- Analytical results demonstrate that the toxic compound levels in the contaminated groundwater have been less than 10% of the site's permitted discharge limits for the previous 12 months;

- Annual discharge volume of less than 200,000 gallons; and

- Compliance history for the last three years indicates no discharge violations;

Upon being granted a change in reporting status, the Permittee must maintain the above conditions for the duration of the permit. Please note MCES reserves the right to increase the reporting frequency at any time.

To be considered for annual reporting in 2000, the attached form must be completed and returned to Renee Gutzman of the MCES Industrial Waste & Pollution Prevention Section by April 1, 2000. If the Permittee's request is approved, MCES staff will revise the sites's permit and mail revised permit pages to the Responsible Party and the Authorized Representative, if applicable.

If you have questions on this matter, please contact Michael Flaherty at (651) 602-4715.

Sincerely,

Leo H. Hermes

Leo H. Hermes, P.E.
Industrial Waste Manager
Industrial Waste & Pollution Prevention Section

Enclosure (Request Form)

230 East Fifth Street St. Paul, Minnesota 55101-1626 (651) 602-1005 Fax 602-1183 TDD/TTY 229-3760

DESIGNATION OF AUTHORIZED REPRESENTATIVE FOR SUBMITTING REPORTS AND BILLING

In many cases, a responsible party may wish to designate a representative for the purpose of signing and submitting routine self-monitoring reports required by the Industrial Discharge Permit (Special Discharges). In addition, some permittees prefer to have billing for permit fees, add-on service charges and strength charges submitted to their consultant or agent. If you wish to designate a representative for either of these purposes, please complete this form and submit it with your permit application. If no representative is designated for billing purposes, all invoices will be sent to the responsible party at the permit mailing address.

Site: NIROP Fridley

5001 East River Road

Minneapolis, MN 55421-1406

Eventually Bay West

I Scott A. Glass (United Defense L.P.) hereby designate Douglas L. Hildre as my authorized representative for the purpose of signing and submitting MCES Special Discharge Reports for the above referenced site. I understand that this designation does not release me from responsibility or liability for any violations that may occur at this site.

Invoices for permit fees, strength charge or add-on service fees shall be sent to:

Contact: Scott A. Glass, P.E.

Billing Party: Commanding Officer, ATTN: Scott A. Glass, Code 18610

Billing Party Address: SOUTHNAVFACENGCOM

P. O. BOX 190010

North Charleston, SC 29419-9010

Scott A. Glass
Name (Responsible Party)

Signature

U.S. NAVY
Company

4/21/98
Date

gw496.sam

Subj: GROUNDWATER TREATMENT FACILITY (GWTF), NAVAL INDUSTRIAL RESERVE ORDNANCE PLANT (NIROP), FRIDLEY, MINNESOTA; NPDES PERMIT NO. MN 0000710, REQUEST FOR ELIMINATION OF CARBON DISULFIDE; REDUCTION IN VOC MONITORING FREQUENCY; AND CHANGE IN SAMPLING METHODOLOGY

Copy to:
MPCA St. Paul (David Douglas, Deborah A. Schumann)
MK (Han Maung)
UDLP (Douglas L. Hildre)
→TTNUS (Mark Sladic)
US EPA (Tom Bloom)
NAVSEA (Kerry Morrow)
Bay West (Paul Walz/Brandon Juran)

DEPARTMENT OF THE NAVY
SOUTHERN DIVISION
NAVAL FACILITIES ENGINEERING COMMAND
P.O. BOX 190010
2155 EAGLE DRIVE
NORTH CHARLESTON, S.C. 29419-9010

Code 1868
4 Apr 00

Minnesota Pollution Control Agency
Attn: Don Kriens, P.E.
Regulatory Compliance Section
520 Lafayette Road North
St. Paul, MN 55155-4194

Subj: GROUNDWATER TREATMENT FACILITY (GWTF), NAVAL INDUSTRIAL RESERVE ORDNANCE PLANT (NIROP), FRIDLEY, MINNESOTA; NPDES PERMIT NO. MN 0000710, REQUEST FOR ELIMINATION OF CARBON DISULFIDE; REDUCTION IN VOC MONITORING FREQUENCY; AND CHANGE IN SAMPLING METHODOLOGY

In accordance with NPDES Permit No. MN 0000710, we have been monitoring the Volatile Organic Compounds (VOCs) of the effluent from the Groundwater Treatment Facility (GWTF) twice monthly since startup of the system over a year ago. We request your approval for eliminating carbon disulfide from the list of required VOCs; for reducing VOC monitoring from twice to once monthly; and for changing sampling methodology from EPA 601/602 to EPA 624. The reasons for our request are provided below:

- **Elimination of carbon disulfide** - As shown in Figure 1, the concentrations of carbon disulfide at the outfall (< 1 ug/l) were considerably below the NPDES limit of 700 ug/l. Analyses of the influent samples also indicated that concentrations of carbon disulfide were below quantitation limits. Therefore, carbon disulfide is not likely to be of any concern in the effluent. Also, laboratory analysis for carbon disulfide requires a separate method (SW-846 8260) which is an additional cost item.

- **Reduction of effluent VOC monitoring frequency from twice to once monthly** - Our monitoring of the effluent discharge showed that the contaminant levels were well below the discharge limits as documented in the *Annual Operations and Maintenance Report October 1999*. TCE is the main compound of concern at the site and Figure 2 shows TCE concentrations at the outfall. The recent effluent sampling and testing results using EPA Method 601 were included in Figure 2. The results indicated that concentrations of TCE in the effluent were well below the regulatory discharge criteria.

- **Change in Sampling Methodology from EPA 601/602 to EPA 624** - Bay West is the new NIROP Fridley GWTF contractor for the Navy. Their contract is based on using En Chem - a laboratory certified by the Minnesota Department of Health. En Chem currently does not perform EPA methods 601/602. Enclosed is a March 24, 2000 Bay West fax to MPCA with a comparison of the method detection limits (MDL), laboratory assigned estimated quantitation limits (EQL) and the Practical Quantitation Limits (PQL) listed in the forthcoming QAPP. Please review this information and let us know if Method 624 could be used for discharge monitoring under the NPDES permit.

Note: The above requests are also proposed in our NPDES Renewal Application submittal of April 1, 2000

Please contact me at (843) 820-5562 or Paul Walz (Bay West Project Manager) at (651) 291-3491 for any clarifications or questions.

Sincerely,

JOEL SANDERS, P.E.
Remedial Project Manager

Encl:
(1) Figures 1 and 2
(2) Bay West March 24, 2000 Fax

DEPARTMENT OF THE NAVY
NAVAL SEA SYSTEMS COMMAND TECHNICAL REPRESENTATIVE
MINNEAPOLIS, MN 55421-1402

RECEIVED
MPCA Information Center
# of pieces ____
MAR 31 2000
Time in 11:40 a.m. p.m. by RJB / ____

March 31, 2000

Minnesota Pollution Control Agency
Water Quality Division
Point Source Section
520 Lafayette Road North
St. Paul, MN 55155-4194

Subj: NPDES PERMIT RENEWAL MN0000710 FOR NAVAL INDUSTRIAL RESERVE ORDNANCE PLANT (NIROP) FRIDLEY, MN

The letter is written to transmit the Navy's completed permit renewal application and permit fees in accordance with permit requirements. The permit application covers only the discharge of treated groundwater through a Navy-owned Groundwater Treatment Facility (GWTF).

In addition to this submission the Navy requests the following changes be made to permit: (1) elimination of sampling for carbon disulfide and (2) reduce voc monitoring of discharge from twice to once monthly, (3) change EPA sampling from method 601/602 to method 624. Separate correspondence will be submitted to further address these issues.

Based upon the meeting minutes between the MPCA, Navy, and UDLP on 14 Mar 00 it is our understanding that two (2) general permits will be issued to the new owner for stormwater and noncontact cooling water discharges at the time of sale of the facility. At that time the Navy's NPDES permit will be modified to reflect that only our GWTF will be covered under the subject permit.

If you should have any questions regarding this submittal our point of contact on this matter is Mr. Paul Walz at (651) 291-0456 or Mr. Joel Sanders who can be reached at (843) 820-5562.

Sincerely,

Patrick K. Morrow
Technical Representative
Naval Sea Systems Command

Copy to:
SOUTHDIVNAVFACENGCOM (J. Sanders)
UDLP (D. Hildre)
GWTF Operator
TetraTech (M. Sladic)

Attachments:

(1) Check No. 66-152/531 $85.00
(2) Transmittal Form
(3) Appendix A
(4) Attachment for Industrial Surface Water Discharge
(5) Attachment B (Item 14, GWTF Description)
(6) Attachment C (Monitoring information)
(7) Attachment 1A (NPDES Monitoring Forms)
(8) Attachment 3A/4A (MSDS)
(9) Attachment 1F (Process Flow Diagram GWTF)
(10)Attachment 1M-a (USGS Topographical Map)
(11)Attachment 1M-b (Stormwater Site Drainage Map)

THE FACE OF THIS DOCUMENT HAS A COLORED BACKGROUND ON WHITE PAPER
THE BACK OF THIS DOCUMENT CONTAINS AN ARTIFICIAL WATERMARK – HOLD AT ANGLE TO VIEW

UNITED DEFENSE, L.P.
Armament Systems Division
4800 East River Road
Minneapolis, Minnesota 55421–1498

66–152/531

Check Date 03-22-00 Check No 10566023

Pay Exactly *EIGHTY FIVE AND 00/100*

$ 85.00
Void After 90 Days

Pay to the order of

MINNESOTA POLLUTION CONTROL AGE
520 LAFAYETTE ROAD
ST PAUL MN 55155-4194

Wachovia Bank &
Trust Company, N.A.

⑈10566023⑈ ⑆053107633⑆ 016260 049799⑈

UNITED DEFENSE, L.P.
Armament Systems Division
4800 East River Road
Minneapolis, Minnesota 55421–1498

VENDOR	COMPANY	Check No.
291304	ARMAMENT SYSTEMS DIV	10566023

INVOICE DATE	INVOICE NUMBER	VOUCHER NUMBER	PURCHASE ORDER	GROSS	DISCOUNT	NET AMOUNT
03-07-00	970361	970361	0	85.00	0.00	85.00
			TOTALS	85.00	0.00	85.00

Minnesota Pollution Control Agency

TRANSMITTAL FORM

MPCA USE ONLY
Application Number
MN
Date Received
Month Day

COMPLETE APPLICATION BY PRINTING OR TYPING. PLEASE MAKE A PHOTOCOPY FOR YOUR RECORDS.

FACILITY INFORMATION

Facility Owner ☐ and/or Operator ☒ (Public Entity, City or Business Firm legally responsible for facility operation) [see Minn. R. 7001.0050]

Permittee Name: US Navy Phone: (843) 820-5562 FAX: (843) 820-7465

Mailing Address: P.O. Box 19010 City: North Charleston

State: SC Zip: 29419-9010 Type of ownership (1) Public ☐ / Private ☐

(1) See Attachment A

Facility Location No Post Office Boxes allowed. Actual physical location of facility – must use actual street or highway address (or Section/Township/Range coordinates). *If applying for a permit that can cover more than one site (e.g. aggregate and/or hot mix asphalt operations), write NA.*

Facility Name: US Navy Groundwater Treatment Facility Phone: (763) 572-7263

Location Address: 4800 East River Road

Facility is located in the ____ quarter of the ____ quarter of section 27 township 30

of Anoka county. Township # 30 Range # 24 East ☐ West ☐

City: Fridley State: MN Zip: 55421

Is the facility located on tribal land? ☐ yes ☒ no If yes, apply to EPA Region V, John Coletti; (312) 886-6106.

Technical Agent or Consulting Engineer Paul Walz Title: Project Manager

Name of firm or organization: BayWest, Inc.

Mailing Address: 5 Empire Drive Phone: (651) 291-0456

City: St. Paul State: MN Zip: 55103-1867

Contact Person (Operator, Plant Manager, City Official): Brandon Juran Title: Plant Operator

APPLICATION INFORMATION

Reason for Application (check all that apply):

☒ Expiration of existing permit (reissue) ☒ Modification to existing permit ☐ Agency request
☐ New permit/facility ☐ Land Application Site Approval ☐ Other, please specify

Modification is to remove the noncontact cooling water/stormwater from the permit. To be covered under General Permits.

Type of Application (check all that apply):

☐ Municipal / ☐ Industrial / ☐ Stormwater / ☐ Dredge / ☒ Pretreatment / ☐ Feedlot / ☐ Water Treatment Plant / ☐ Sanitary Sewer / ☐ Biosolids / ☐ Aquaculture

Have you ever applied for, or do you currently have a National Pollutant Discharge Elimination System (NPDES) or State Disposal System (SDS) permit for this facility? ☒ yes ☐ no

If yes, please list permit number(s) MN0000710

Name on existing permit US Navy - Naval Sea Systems Command
Armament Systems Division, United Defense, L.P.

List all current MPC permits or certificates, and their numbers, which also may apply to this facility:
RCRA Corrective Action Requirements (MN3170022914); Air Operation Permit (No. 897);
Liquid Storage General Permit for AST's (1992)

If this is a new or expanded facility, has an Environmental Impact Statement or an Environmental Assessment Worksheet been prepared?

yes ☐ no ☒ If yes, note the title and date:

Annual Permit fee invoices should be mailed to ☒ Owner/operator address ☐ Facility location address ☐ Not applicable

Discharge Monitoring Report forms should be mailed to ☒ Owner/operator address ☐ Facility location address ☐ Not applicable

APPLICATION FEES

An application fee is required under Minn. Stat. § 116.07, subd. 4d (1990) and Minn. R. ch 7002 (Permit Fee Rules). This application fee must be submitted with the permit application.

Application fees are as follows:

Sanitary Sewer..... $240.00

Construction Stormwater..... $240.00

All other applications [including non-construction storm water] $85.00

Reminder:

✓ *Did you sign attachment form(s)?*

✓ *Attach your application fee?*

✓ *Enclose completed attachments?*

Applications that are submitted without an authorized signature, the required application fee, and attachments will be returned. Please make your check payable to the Minnesota Pollution Control Agency. Send the completed permit application, attachments (including plans and specifications, if applicable) and check to:

Minnesota Pollution Control Agency
Water Quality Division
Point Source Section
520 Lafayette Road North
St. Paul, Minnesota 55155-4194

For more information please contact:

In Metro Area: Water Quality Division Customer Service Center at (612) 296-7162
Outside Metro Area 1-800-657-3864 and ask for Water Quality Customer Service Center

FACILITY INFORMATION:

Facility Owner

The Naval Industrial Reserve Ordnance Plant (NIROP) is owned by the U.S. Navy under the cognizance of the Naval Sea Systems Command, Washington, D. C. Contiguous and adjacent property and buildings are owned by United Defense, L.P. The Government-owned property covers 82.16 acres and is occupied by structures containing approximately 1,642,000 square feet of floor space. The adjacent United Defense-owned property contains 50.13 acres with approximately 326,000 square feet under roof. Approximately 1,600 employees work at this facility. The combined facility is operated by Armament Systems Division of United Defense, L.P.

The NIROP is an industrial production facility with capabilities for development, design engineering, fabrication and testing of advanced military weapons systems and components (SIC 3489). The following manufacturing processes are presently used at the facility:

- welding
- machining and grinding
- abrasive media blasting
- painting
- assembly and component integration

The Navy and United Defense intend to jointly sell the NIROP and United Defense real property by the end of 2000. United Defense will then become a tenant in the facility performing the above listed manufacturing processes. Applications for separate storm water and noncontact cooling water general permits are to be completed by the new owner.

This permit application is strictly for the operation of a groundwater treatment facility and the discharge of treated groundwater to the NIROP stormsewer. Operation of this groundwater treatment facility is governed by the terms and condition of a Federal Facilities Agreement between the U.S. Navy, Minnesota Pollution Control Agency and the U.S. Environmental Protection Agency dated March 1991.

NPDES PERMIT APPLICATION - APPENDIX A

The 1993 Legislature revised the Minnesota Pollution Control Agency's responsibilities in Minnesota Statutes Section 115.03, subd. 1(e)(10) "Requiring that applicants for wastewater discharge permits evaluate in their applications the potential reuses of the discharged wastewater;"

As a result of this 1993 Law, the Minnesota Pollution Control Agency has been charged with requiring permit applicants to evaluate the reuse potential of their wastewater prior to discharge.

Therefore, please provide, in narrative form in the space below, an evaluation of reuse potential of your wastewater prior to discharge to a receiving stream, lake, or storm sewer. Some ideas include water conservation measures, use of cooling tower blowdown for thermal discharges, lawn watering or irrigation of parks and public property, wetland reclamation/development/recharge.

The non-contact cooling water discharge may have reuse potential for lawn water or irrigation of the Anoka County Regional Park directly east of the facility. The storm sewer is piped directly underneath the park.

The treated groundwater has been evaluated by the Navy for reuse as a potable water supply for the City of Fridley. The U.S. Navy and the City of Fridley could not resolve issues on who would be responsible for the final treatment and distribution of this water source. Furthermore, the Record of Decision calls for the treatment and discharge of the groundwater to the Mississippi River. The Minnesota Pollution Control Agency Site Response Unit has weighed in on this issue and has supported the U.S. Navy's decision not to pursue the reuse of this groundwater with the City of Fridley.

Minnesota Pollution Control Agency

ATTACHMENT FOR
Industrial Surface Water Discharge Wastewater Treatment Facilities National Pollutant Discharge Elimination System (NPDES) Permit

MPCA USE ONLY		
Application Number		
MN		
Date Received		
Month	Day	Year

COMPLETE APPLICATION BY PRINTING OR TYPING. PLEASE MAKE A PHOTOCOPY FOR YOUR RECORDS.

PERMITTEE: US Navy

BASIC INFORMATION

1. Principal Facility Activity: Groundwater Treatment
Products Produced: NA
Raw Material Consumed: NA
Average and maximum amount per Unit Time (such as tons/year, kilograms/day) of product: _____

Average and maximum amount per Unit Time (such as tons/year, kilograms/day) of raw material: _____

Standard Industrial Classification (SIC) Code Number: _____

STORM WATER

2. Is the facility now covered by an MPCA storm water NPDES permit? ☒ Yes ☐ No
If yes, indicate the permit number and proceed to item 6 below: MN 0000710

3. Does storm water contact ANY raw or processed materials, finished products, industrial waste, byproducts, or any other type of materials at the facility? ☐ Yes ☒ No

If yes, describe these materials: _____

4. Is any vehicle maintenance, transportation equipment cleaning, or airport deicing conducted at the facility?
☐ Yes ☒ No

5. Indicate where the storm water from the facility discharges to: Mississippi River

PROCESS WASTEWATER

6. Does the facility generate process wastewater? ☒ Yes ☐ No

7. If yes, the process wastewater from the facility is disposed of to: (check all that apply)
- ☐ Municipal storm sewer
- ☒ Sanitary Sewer
- ☐ Storm water retention basin or pond
- ☐ Septic tank/drain field
- ☐ Surface Water, Name: _____
- ☐ Other

ATTACHMENT 2A

QUANTERRA INCORPOR__SD

PRELIMINARY DATA SUMMARY

COC #037

The results shown below may still require additional laboratory review and are subject to change. Actions taken based on these results are the responsibility of the data user.

Lot #: A0B180184

Morrison Knudsen Corporation
NIROP FRIDLEY,MN GWTF
Project Number: 4324-0042

Date Reported: 2/25/00

Client Sample ID: EFFLUENT H20-OUTFALL
Sample #: 001 Date Sampled: 02/17/00 14:00 Date Received: 02/18/00 Matrix: WATER

PARAMETER	RESULT	REPORTING LIMIT	UNITS	ANALYTICAL METHOD	
Purgeable Halocarbons					Reviewed
cis-1,2-Dichloroethene	ND	1.0	ug/L	CFR136A 601	
Bromodichloromethane	ND	1.0	ug/L	CFR136A 601	
Bromoform	ND	1.0	ug/L	CFR136A 601	
Bromomethane	ND	1.0	ug/L	CFR136A 601	
Carbon tetrachloride	ND	1.0	ug/L	CFR136A 601	
Chlorobenzene	ND	1.0	ug/L	CFR136A 601	
Chloroethane	ND	1.0	ug/L	CFR136A 601	
Chloroform	ND	1.0	ug/L	CFR136A 601	
Chloromethane	ND	1.0	ug/L	CFR136A 601	
Dibromochloromethane	ND	1.0	ug/L	CFR136A 601	
1,1-Dichloroethane	ND	1.0	ug/L	CFR136A 601	
1,2-Dichloroethane	ND	1.0	ug/L	CFR136A 601	
1,1-Dichloroethene	ND	1.0	ug/L	CFR136A 601	
trans-1,2-Dichloroethene	ND	1.0	ug/L	CFR136A 601	
1,2-Dichloropropane	ND	1.0	ug/L	CFR136A 601	
cis-1,3-Dichloropropene	ND	1.0	ug/L	CFR136A 601	
trans-1,3-Dichloropropene	ND	1.0	ug/L	CFR136A 601	
Methylene chloride	ND	1.0	ug/L	CFR136A 601	
1,1,2,2-Tetrachloroethane	ND	1.0	ug/L	CFR136A 601	
Tetrachloroethene	ND	1.0	ug/L	CFR136A 601	
1,1,1-Trichloroethane	ND	1.0	ug/L	CFR136A 601	
1,1,2-Trichloroethane	ND	1.0	ug/L	CFR136A 601	
Trichloroethene	ND	1.0	ug/L	CFR136A 601	
Vinyl chloride	ND	1.0	ug/L	CFR136A 601	
Purgeable Aromatics					Reviewed
Acetone	ND	10	ug/L	CFR136A 602	
Carbon disulfide	ND	10	ug/L	CFR136A 602	
4-Methyl-2-pentanone	ND	2.0	ug/L	CFR136A 602	
Styrene	ND	1.0	ug/L	CFR136A 602	
Xylenes (total)	ND	1.0	ug/L	CFR136A 602	
2-Butanone	ND	2.0	ug/L	CFR136A 602	
2-Hexanone	ND	10	ug/L	CFR136A 602	
Benzene	ND	1.0	ug/L	CFR136A 602	
Ethylbenzene	ND	1.0	ug/L	CFR136A 602	
Toluene	ND	1.0	ug/L	CFR136A 602	

(Continued on next page)

QUANTERRA INCORPOR[illegible]ED

PRELIMINARY DATA SUMMARY

The results sh[illegible] below may still require additional laboratory review and are subject to change. Action[illegible] taken based on these results are the responsibility of the data user.

Lot #: A0B180[illegible]

Morrison Knudsen Corporation
NIROP FRIDLEY,MN GWTF
Project Number: 4324-0042

Date Reported: 2/25/00

Client Sample [illegible]: EFFLUENT H20-OUTFALL
Sample #: 0[illegible] Date Sampled: 02/17/00 14:00 Date Received: 02/18/00 Matrix: WATER

PARAMETER	RESULT	REPORTING LIMIT	UNITS	ANALYTICAL METHOD	Reviewed
Volatile O[illegible]cs by GC/MS					
Chlorome[illegible]	ND	2.0	ug/L	SW846 8260B	
Bromomet[illegible]	ND	2.0	ug/L	SW846 8260B	
Vinyl ch[illegible]de	ND	2.0	ug/L	SW846 8260B	
Chloroeth[illegible]	ND	2.0	ug/L	SW846 8260B	
Methylene [illegible]loride	0.58 J	1.0	ug/L	SW846 8260B	
Acetone	5.6 J,B	10	ug/L	SW846 8260B	
Carbon di[illegible]fide	ND	1.0	ug/L	SW846 8260B	
1,1-Dichl[illegible]ethene	ND	1.0	ug/L	SW846 8260B	
1,1-Dichl[illegible]ethane	ND	1.0	ug/L	SW846 8260B	
Chloroform	ND	1.0	ug/L	SW846 8260B	
1,2-Dichl[illegible]ethane	ND	1.0	ug/L	SW846 8260B	
2-Butanone	ND	10	ug/L	SW846 8260B	
1,1,1-Tri[illegible]loroethane	ND	1.0	ug/L	SW846 8260B	
Carbon te[illegible]chloride	ND	1.0	ug/L	SW846 8260B	
Bromodich[illegible]methane	ND	1.0	ug/L	SW846 8260B	
1,2-Dichl[illegible]propane	ND	1.0	ug/L	SW846 8260B	
cis-1,3-D[illegible]loropropene	ND	1.0	ug/L	SW846 8260B	
Trichloro[illegible]e	0.82 J	1.0	ug/L	SW846 8260B	
Dibromoch[illegible]methane	ND	1.0	ug/L	SW846 8260B	
1,1,2-Tri[illegible]roethane	ND	1.0	ug/L	SW846 8260B	
Benzene	0.086 J,B	1.0	ug/L	SW846 8260B	
trans-1,3-[illegible]hloropropene	ND	1.0	ug/L	SW846 8260B	
Bromoform	ND	1.0	ug/L	SW846 8260B	
4-Methyl-[illegible]tanone	ND	10	ug/L	SW846 8260B	
2-Hexanone	ND	10	ug/L	SW846 8260B	
Tetrachlo[illegible]ethene	ND	1.0	ug/L	SW846 8260B	
1,1,2,2-T[illegible]achloroethane	ND	1.0	ug/L	SW846 8260B	
Toluene	0.054 J,B	1.0	ug/L	SW846 8260B	
Chlorobenz[illegible]e	ND	1.0	ug/L	SW846 8260B	
Ethylbenz[illegible]	ND	1.0	ug/L	SW846 8260B	
Styrene	ND	1.0	ug/L	SW846 8260B	
Xylenes ([illegible]l)	ND	1.0	ug/L	SW846 8260B	
cis-1,2-D[illegible]loroethene	0.12 J	0.50	ug/L	SW846 8260B	
trans-1,2-[illegible]chloroethene	ND	0.50	ug/L	SW846 8260B	

J Estimated r[illegible] Result is less than RL.

B Method blank [illegible]ination. The associated method blank contains the target analyte at a reportable level.

(Continued on next page)

QUANTERRA INCORPOR...ED

PRELIMINARY DATA SUMMARY

The results shown below may still require additional laboratory review and are subject to change. Actions taken based on these results are the responsibility of the data user.

Lot #: A0B180184

Morrison Knudsen Corporation
NIROP FRIDLEY,MN GWTF
Project Number: 4324-0042

Date Reported: 2/25/00

PARAMETER	RESULT	REPORTING LIMIT	UNITS	ANALYTICAL METHOD	
Client Sample ID: EFFLUENT H20-OUTFALL					
Sample #: 001 Date Sampled: 02/17/00 14:00 Date Received: 02/18/00 Matrix: WATER					
Inorganic Analysis					Reviewed
pH (Electrometric)	8.3		No Units	MCAWW 150.1	
Client Sample ID: TRIP BLANK					
Sample #: 002 Date Sampled: 02/17/00 14:00 Date Received: 02/18/00 Matrix: WATER					
Purgeable Halocarbons					Reviewed
Bromodichloromethane	ND	1.0	ug/L	CFR136A 601	
Bromoform	ND	1.0	ug/L	CFR136A 601	
Bromomethane	ND	1.0	ug/L	CFR136A 601	
Carbon tetrachloride	ND	1.0	ug/L	CFR136A 601	
Chlorobenzene	ND	1.0	ug/L	CFR136A 601	
Dibromochloromethane	ND	1.0	ug/L	CFR136A 601	
Chloroethane	ND	1.0	ug/L	CFR136A 601	
Chloroform	ND	1.0	ug/L	CFR136A 601	
Chloromethane	ND	1.0	ug/L	CFR136A 601	
1,1-Dichloroethane	ND	1.0	ug/L	CFR136A 601	
1,2-Dichloroethane	ND	1.0	ug/L	CFR136A 601	
1,1-Dichloroethene	ND	1.0	ug/L	CFR136A 601	
cis-1,2-Dichloroethene	ND	1.0	ug/L	CFR136A 601	
trans-1,2-Dichloroethene	ND	1.0	ug/L	CFR136A 601	
1,2-Dichloropropane	ND	1.0	ug/L	CFR136A 601	
cis-1,3-Dichloropropene	ND	1.0	ug/L	CFR136A 601	
trans-1,3-Dichloropropene	ND	1.0	ug/L	CFR136A 601	
Methylene chloride	ND	1.0	ug/L	CFR136A 601	
1,1,2,2-Tetrachloroethane	ND	1.0	ug/L	CFR136A 601	
Tetrachloroethene	ND	1.0	ug/L	CFR136A 601	
1,1,1-Trichloroethane	ND	1.0	ug/L	CFR136A 601	
1,1,2-Trichloroethane	ND	1.0	ug/L	CFR136A 601	
Trichloroethene	ND	1.0	ug/L	CFR136A 601	
Vinyl chloride	ND	1.0	ug/L	CFR136A 601	
Purgeable Aromatics					Reviewed
Acetone	ND	10	ug/L	CFR136A 602	
Carbon disulfide	ND	10	ug/L	CFR136A 602	
4-Methyl-2-pentanone	ND	2.0	ug/L	CFR136A 602	
Styrene	ND	1.0	ug/L	CFR136A 602	

(Continued on next page)

QUANTERRA INCORPORATED

PRELIMINARY DATA SUMMARY

COC #038

The results shown below may still require additional laboratory review and are subject to change. Actions taken based on these results are the responsibility of the data user.

Lot #: A0B260103

Morrison Knudsen Corporation
NIROP FRIDLEY, MN GWTF
Project Number: 4324-0042

Date Reported: 3/07/00

PARAMETER	RESULT	REPORTING LIMIT	UNITS	ANALYTICAL METHOD	
Client Sample ID: FRIDIN27					
Sample #: 001 Date Sampled: 02/24/00 12:00 Date Received: 02/25/00 Matrix: WATER					
Inductively Coupled Plasma (ICP) Metals					Reviewed
Iron	1.7	0.10	mg/L	SW846 6010B	
Manganese	0.32	0.015	mg/L	SW846 6010B	
Inorganic Analysis					Reviewed
Total Hardness (Titrimetric, EDTA)	520	5	mg/L	MCAWW 130.2	
Client Sample ID: FRIDEF30					
Sample #: 002 Date Sampled: 02/24/00 12:00 Date Received: 02/25/00 Matrix: WATER					
Inductively Coupled Plasma (ICP) Metals					Reviewed
Iron	1.0	0.10	mg/L	SW846 6010B	
Manganese	0.34	0.015	mg/L	SW846 6010B	
Inorganic Analysis					Reviewed
Total Hardness (Titrimetric, EDTA)	500	5	mg/L	MCAWW 130.2	
Client Sample ID: FRIDOUT31A					
Sample #: 003 Date Sampled: 02/24/00 11:50 Date Received: 02/25/00 Matrix: WATER					
Purgeable Halocarbons					Reviewed
1,1-Dichloroethane	ND	1.0	ug/L	CFR136A 601	
cis-1,2-Dichloroethene	ND	1.0	ug/L	CFR136A 601	
trans-1,2-Dichloroethene	ND	1.0	ug/L	CFR136A 601	
1,1-Dichloroethene	ND	1.0	ug/L	CFR136A 601	
Methylene chloride	ND	1.0	ug/L	CFR136A 601	
Tetrachloroethene	ND	1.0	ug/L	CFR136A 601	
1,1,1-Trichloroethane	ND	1.0	ug/L	CFR136A 601	
Trichloroethene	ND	1.0	ug/L	CFR136A 601	

(Continued on next page)

QUANTERRA INCORPORATED

PRELIMINARY DATA SUMMARY

The results shown below may still require additional laboratory review and are subject to change. Actions taken based on these results are the responsibility of the data user.

Lot #: A0B260103

Morrison Knudsen Corporation
NIROP FRIDLEY, MN GWTF
Project Number: 4324-0042

Date Reported: 3/07/00

PARAMETER	RESULT	REPORTING LIMIT	UNITS	ANALYTICAL METHOD	
Client Sample ID: FRIDOUT31B					
Sample #: 004 Date Sampled: 02/24/00 11:50 Date Received: 02/25/00 Matrix: WATER					
Volatile Organics by GC/MS					
Carbon disulfide	ND	1.0	ug/L	SW846 8260B	Reviewed
Client Sample ID: FRIDOUT31C					
Sample #: 005 Date Sampled: 02/24/00 11:50 Date Received: 02/25/00 Matrix: WATER					
Purgeable Halocarbons					
Bromodichloromethane	ND	1.0	ug/L	CFR136A 601	Reviewed
Bromoform	ND	1.0	ug/L	CFR136A 601	
Bromomethane	ND	1.0	ug/L	CFR136A 601	
Carbon tetrachloride	ND	1.0	ug/L	CFR136A 601	
Chlorobenzene	ND	1.0	ug/L	CFR136A 601	
Chloroethane	ND	1.0	ug/L	CFR136A 601	
2-Chloroethyl vinyl ether	ND	5.0	ug/L	CFR136A 601	
Chloroform	ND	1.0	ug/L	CFR136A 601	
Chloromethane	ND	1.0	ug/L	CFR136A 601	
Dibromochloromethane	ND	1.0	ug/L	CFR136A 601	
1,2-Dichlorobenzene	ND	1.0	ug/L	CFR136A 601	
1,3-Dichlorobenzene	ND	1.0	ug/L	CFR136A 601	
1,4-Dichlorobenzene	ND	1.0	ug/L	CFR136A 601	
Dichlorodifluoromethane	ND	1.0	ug/L	CFR136A 601	
1,1-Dichloroethane	ND	1.0	ug/L	CFR136A 601	
1,2-Dichloroethane	ND	1.0	ug/L	CFR136A 601	
1,1-Dichloroethene	ND	1.0	ug/L	CFR136A 601	
trans-1,2-Dichloroethene	ND	1.0	ug/L	CFR136A 601	
1,2-Dichloropropane	ND	1.0	ug/L	CFR136A 601	
cis-1,3-Dichloropropene	ND	1.0	ug/L	CFR136A 601	
trans-1,3-Dichloropropene	ND	1.0	ug/L	CFR136A 601	
Methylene chloride	ND	1.0	ug/L	CFR136A 601	
1,1,2,2-Tetrachloroethane	ND	1.0	ug/L	CFR136A 601	
Tetrachloroethene	ND	1.0	ug/L	CFR136A 601	
1,1,1-Trichloroethane	ND	1.0	ug/L	CFR136A 601	
1,1,2-Trichloroethane	ND	1.0	ug/L	CFR136A 601	
Trichloroethene	ND	1.0	ug/L	CFR136A 601	
Trichlorofluoromethane	ND	1.0	ug/L	CFR136A 601	
Vinyl chloride	ND	1.0	ug/L	CFR136A 601	
cis-1,2-Dichloroethene	ND	1.0	ug/L	CFR136A 601	

(Continued on next page)

QUANTERRA INCORPORATED

PRELIMINARY DATA SUMMARY

The results shown below may still require additional laboratory review and are subject to change. Actions taken based on these results are the responsibility of the data user.

Lot #: A0B260103

Morrison Knudsen Corporation
NIROP FRIDLEY, MN GWTF
Project Number: 4324-0042

Date Reported: 3/07/00

PARAMETER	RESULT	REPORTING LIMIT	UNITS	ANALYTICAL METHOD	
Client Sample ID: FRIDOUT31C					
Sample #: 005 Date Sampled: 02/24/00 11:50 Date Received: 02/25/00 Matrix: WATER					
Purgeable Aromatics					Reviewed
Benzene	ND	1.0	ug/L	CFR136A 602	
Ethylbenzene	ND	1.0	ug/L	CFR136A 602	
Toluene	ND	1.0	ug/L	CFR136A 602	
Client Sample ID: FRIDOUTB36A					
Sample #: 006 Date Sampled: 02/24/00 11:50 Date Received: 02/25/00 Matrix: WATER					
Purgeable Halocarbons					Reviewed
1,1-Dichloroethane	ND	1.0	ug/L	CFR136A 601	
cis-1,2-Dichloroethene	ND	1.0	ug/L	CFR136A 601	
trans-1,2-Dichloroethene	ND	1.0	ug/L	CFR136A 601	
1,1-Dichloroethene	ND	1.0	ug/L	CFR136A 601	
Methylene chloride	ND	1.0	ug/L	CFR136A 601	
Tetrachloroethene	ND	1.0	ug/L	CFR136A 601	
1,1,1-Trichloroethane	ND	1.0	ug/L	CFR136A 601	
Trichloroethene	ND	1.0	ug/L	CFR136A 601	
Client Sample ID: FRIDOUTB36B					
Sample #: 007 Date Sampled: 02/24/00 11:50 Date Received: 02/25/00 Matrix: WATER					
Volatile Organics by GC/MS					Reviewed
Carbon disulfide	ND	1.0	ug/L	SW846 8260B	

MORRISON KNUDSEN CORPORATION
ENVIRONMENTAL SERVICES DIVISION

CHAIN OF CUSTODY RECORD #038

1500 West 3rd Street
Cleveland, Ohio 44113-1406
(216) 523-5600

Project No.: 4324-0042
Project Name: NIROP Fridley, MN GWTF
Samplers: (Signature)
Sampler: (Print) Ryan Giese Ryan Giese

Sample Type	Sampling Point Description	Sample Date	Time	Sample I.D. Number	Split Samples Yes	Split Samples No	Metals SW846 6010A Fe, Mn, hardness	VOC EPA 601/602 Short list	VOC EPA 601/602 Full list	VOC SW8260 carbon disulfide	Remarks
H_2O	Influent H_2O	2-24-00	12:00	FRIDIN27			1				
H_2O	Effluent H_2O-plant	2-24-00	12:00	FRIDEF30			1				
H_2O	Effluent H_2O-outfall	2-24-00	11:50	FRIDOUT31A				3			
H_2O	Effluent H_2O-outfall	2-24-00	11:50	FRIDOUT31B						3	
H_2O	Effluent H_2O-outfall	2-24-00	11:50	FRIDOUT31C					3		
H_2O	Trip Blank			FRIDOUTB36A				2			
H_2O	Trip Blank			FRIDOUTB36B						2	
	* 5-day turnaround										

Relinquished By: (Signature) / Company:	Date/Time	Received By: (Signature) / Company:	Relinquished By: (Signature) / Company:	Date/Time	Received By: (Signature) / Company:
Ryan Giese MK	2-24-00 12:15				
Relinquished By: (Signature) / Company:	Date/Time	Received By: (Signature) / Company:	Relinquished By: (Signature) / Company:	Date/Time	Received By: (Signature) / Company:
Relinquished By: (Signature) / Company:	Date/Time	Received By: (Signature) / Company:	Relinquished By: (Signature) / Company:	Date/Time	Received By: (Signature) / Company:
Relinquished By: (Signature) / Company:	Date/Time	Received By: (Signature) / Company:	Relinquished By: (Signature) / Company:	Date/Time	Received By: (Signature) / Company:

MKES127/89 (Cleve)

MORRISON KNUDSEN CORPORATION
ENVIRONMENTAL SERVICES DIVISION

CHAIN OF CUSTODY RECORD #037

1500 West 3rd Street
Cleveland, Ohio 44113-1406
(216) 523-5600

Project No.: 4324-0042
Project Name: NIROP Fridley, MN GWTF
Samplers: (Signature)
Sampler: (Print) Ryan Giese Ryan Giese

Sample	Sampling Point	Sample Date	Time	Sample	Split Samples Yes	Split Samples No	Analysis Required: EPA 601, 602	SW8260	Cyanide disulfide	EPA 150.1	Remarks
H_2O	Effluent H_2O-outfall	2-17-00	1400	FRIDOUT30	A		3			1	
H_2O	Effluent H_2O-outfall	2-17-00	1400	FRIDOUT30	B			3			
H_2O	Outfall MS/MSD	2-17-00	1400	FRIDOUT30	MS	A	3				
H_2O	Outfall MS/MSD	2-17-00	1400	FRIDOUT30	MS	B		3			
H_2O	Trip Blank			FRIDOUTB35		A	2				
H_2O	Trip Blank			FRIDOUTB35		B		2			
	* 5-day turnaround										

Relinquished By: (Signature) / Company:	Date/Time	Received By: (Signature) / Company:	Relinquished By: (Signature) / Company:	Date/Time	Received By: (Signature) / Company:
Ryan McKee	2-17-00 1415				
Relinquished By: (Signature) / Company:	Date/Time	Received By: (Signature) / Company:	Relinquished By: (Signature) / Company:	Date/Time	Received By: (Signature) / Company:
Relinquished By: (Signature) / Company:	Date/Time	Received By: (Signature) / Company:	Relinquished By: (Signature) / Company:	Date/Time	Received By: (Signature) / Company:
Relinquished By: (Signature) / Company:	Date/Time	Received By: (Signature) / Company:	Relinquished By: (Signature) / Company:	Date/Time	Received By: (Signature) / Company:

MKES127/89 (Cleveland)

#9656/93

WATER SUPPLY

8. What is the source of the intake water supply for the facility?

		Rate of supply (gallons/day)?
☐ Municipal water supply, city name:	City of Fridley	2000-3000 Gallon/Cycle
☐ Ground water, intake location:	Site Groundwater Cleanup	936,000
☐ Surface water, name:		

Is the intake water supply chlorinated or otherwise disinfected? ☒ Yes ☐ No

WATER QUALITY TEST RESULTS

Please clearly indicate, with all test results, the specific dates, locations, types of wastewater, and methods of sampling.

9. A. Attach (1A) test results for total suspended solids and pH at each of the facility discharge points.

B. Attach (2A) test results for all other pollutants known or reasonably believed to be present at each of the facility discharge points. Such pollutants may include biochemical oxygen demand, fecal coliform, temperature (heat), nutrients (phosphorus, ammonia, nitrate, nitrite), metals, salts, cyanide, residual chlorine, fluoride, oil and grease, polychlorinated biphenyls, phenols, polynuclear aromatic hydrocarbons, volatile organic compounds, pesticides and/or radioactivity.

C. If this is an application for reissuance of an existing permit, review your existing NPDES/SDS permit to see if it has special testing requirements for the application for reissuance of the permit. If so, be sure to comply with those requirements. The existing permit also may have special requirements for reports or other submittals for the application for reissuance of the permit. Be sure to comply with these requirements also. Failure to complete the application for reissuance of a permit as required by the permit is a violation of the permit itself and is subject to enforcement action.

10. Are there ground water monitoring wells or lysimeters at your facility? ☒ Yes ☐ No

If yes, describe where they were installed

See Attached Map (Monitoring Locations, NIROP, Fridey, Fig. 4.1)

11. Indicate the name of the laboratory that analyzes your samples: Interpol and Enchem

Indicate the Minnesota Department of Health Laboratory Certification Number for this laboratory:

Enchem No. 055999107 Interpol No. 027003148

CHEMICAL ADDITIVES

12. List below all chemical additives that are used or proposed to be used at the facility. This must include all process reagents, flocculants, biocides, wastewater treatment chemical additives, chlorine or other disinfectants, detergents, cleaning products, chemical dust suppressants, freeze conditioning agents, etc.

Product Name	How often added?	Average rate of use (weight or volume per year)
Calgon pHreeguard 1300	Continuous	3-4 ppm Dosage (1000 GPY)

You must attach (3A) information on chemical composition, aquatic toxicity, human health, and environmental fate for each proposed chemical additive. Attach (4A) Material Safety Data Sheets and complete product labels for each additive.

NON-CONTACT COOLING WATER

13. Does the facility discharge non-contact cooling water (e.g., power generation, refrigeration, boilers, etc.)?
☐ Yes ☒ No
If yes, is this once-through ☐ or recirculating ☐ ?
Are there any chemical additives to this wastestream? ☐ Yes ☐ No
If yes, list under "Chemical Additives": _____

Flow Rate Average	Flow Rate Maximum	Is discharge continuous, controlled, intermittent, or periodic seasonal?	Temperature	Receiving Water

WASTEWATER TREATMENT AND DISCHARGE

14. How do you dispose of sewage (sanitary wastewater) at the facility? To Plant's 15" Diameter Sanitary Sewer via Plant Industrial Waste Discharge Permit No. 0081

15. Give a complete description of your wastewater treatment system and note any changes made since this permit was last issued:
See Attachment B

16. Identify the discharge rate (gallons per day) and other information for each wastewater outfall discharge point:

Outfall point number	Type of wastewater	Discharge flow rate, average	Discharge flow rate, maximum	Is discharge continuous, controlled, intermittent, or periodic seasonal?	Route to receiving waters
020	Groundwater	650 GPM	1000 GPM	Continuous	Via Plant's
					Storm Sewer
					to Mississippi
					River

17. Describe how and where the sediments and sludges removed from the wastewater treatment system at the facility are disposed of:
Shipped to Safety Kleen, Industrial NonHazardous Waste Landfill in Rosemount, MN

18. Attach a diagram chart (1F) of the flow through the facility and the wastewater treatment system to each discharge point.

19. Attach a detailed map (1M), either U.S. Geological Survey, County Soil Survey, or County Plat where the location of the facility, the wastewater treatment system, each of the discharge outfalls, other surface and ground water sampling points, and all receiving waters are all clearly identified.

21. If the system is currently covered under an NPDES/SDS permit, has the system been in compliance with the permit limits during the past five years?

[X] yes [ ] no If no, please explain. _____

ATTACHMENTS (Checklist)

[X] (1A) Test results for total suspended solids & pH.

[X] (2A) Test results for all other pollutants.

[X] (3A) Information on chemical composition.

[X] (4A) MSDS sheets & product.

MAPS (Checklist)

[X] (1M) U.S. Geologic Survey, Topographic map, County Soil Survey, or County Plat

FLOW CHART (Checklist)

[X] (1F) Route of wastewater flow through all treatment processes.

CERTIFICATION

Federal regulations (Section 309(c)(2) of the Clean Water Act and State regulations (Minn. R. 7001.0070) require the authorized signer to be one of the following:

A. For corporation, a principal executive officer of at least the level of vice president;
B. For a partnership or sole proprietorship, a general partner or the proprietor, respectively; or
C. For a municipality, State, Federal, or other public facility, either a principal executive officer or ranking executive official.
D. If the operator of the facility is different than the owner, both the operator and the owner according to items A to C.

"I certify under penalty of law that this document and all attachments were prepared under my direction or supervision in accordance with a system designed to assure that qualified personnel properly gathered and evaluated the information submitted. Based on my inquiry of the person, or persons, who manage the system, or those persons directly responsible for gathering the information, the information submitted is, to the best of my knowledge and belief, true, accurate, and complete. I am aware that there are significant penalties for submitting false information, including the possibility of fine and imprisonment."

PRINTED NAME William H. Lewis CAPT CEC US NAVY TITLE COMMANDING OFFICER

AUTHORIZED SIGNATURE W. H. Lewis DATE 31 MARCH 2000

STATE TAX I.D. # N/A FEDERAL TAX I.D. # N/A

Reminder

- Do you enclose the [illegible]
- Did you enclose all necessary attachments?

Applications submitted without an authorized signature, the required application fee and attachments, will be returned. Please make your check payable to the Minnesota Pollution Control Agency. Send completed permit application, attachments (including plans and specifications, if applicable) and check to:

Minnesota Pollution Control Agency
Water Quality Division
Point Source Section
520 Lafayette Road North
St. Paul, Minnesota 55155-4194

03/31/2000 11:20 SOUTHDIV OFFICE OF COUNSEL → 6612572334S NO.134 D002

INDUSTRIAL SURFACE WATER DISCHARGE
WASTEWATER TREATMENT FACILITIES
NPDES PERMIT APPLICATION

Item 14. Wastewater Treatment and Discharge

The groundwater treatment facility (GWTF) was designed to treat up to 1000 gallons per minute (gpm) groundwater contaminated with volatile organic compounds (primarily chlorinated solvents). The GWTF was constructed in 1998 and began full operation on December 7, 1998. The GWTF is currently operating at approximately 650 gpm. The following are the system components:

Extraction Wells and Feed System
Groundwater is collected by means of submersible pumps installed in six existing extraction wells screened in the alluvial aquifer. The pumps deliver groundwater from the wells to an equalization tank located in a building on the west side of the plant. Each well has a separate connection to the top of the equalization tank. From this tank, groundwater is pumped by centrifugal pumps to the air stripping system located in the northwest corner of the plant.

Anti-scale Polymer Injection System
The anti-scale polymer system supplies chemical treatment of groundwater prior to entering the air strippers. Its purpose is to prevent minerals in the water from depositing in the air strippers and connected piping. The polymer is pumped from a 400 gal. tote tank into the feed system using a chemical metering pump. The metering pump allows for adjustment of the polymer to coincide with the amount of groundwater being pumped. The current dosage of polymer is 3 parts per million.

Air Stripping System
The air stripping system consists of four Carbonair Model STAT-400 , seven tray low profile air strippers. Three air strippers are used in parallel to remove VOC's from the groundwater by forcing air from the bottom of the strippers through the groundwater as it flows by gravity down through the aeration trays. The overall effect is a multiple counter-current contact of contaminated groundwater and air, with each stripper having a cross-flow of water opposing a vertical flow of air. The fourth unit is maintained as backup in order to perform preventative maintenance on the other units.

Air is supplied to each stripper by an air blower. Air from the blowers is introduced into the sump of each stripper and is forced to the top where it is discharged out the demister section of the stripper. The exhausted air containing the stripped VOC's is then discharged through 18 inch diameter ducts to a single exhaust stack on the north side of the plant. Air modeling of the exhausted contaminants indicated that no air pollution control was warranted to meet MPCA air emissions guidance.

Effluent Discharge System
The treated groundwater flows by gravity from each stripper to an effluent sump. The strippers can also be drained to the treatment area floor sump to service the air strippers. The treated water is pumped from the effluent sump back to the equalization building where it is piped into the plants storm sewer with discharge via Outfall 020. The treated groundwater can also be diverted to a sanitary sewer which is connected to the 96 inch diameter sewer on the west side of East River Road. The groundwater is treated to a level that meets maximum contaminant levels listed in the NPDES permit.

ACAD: 7842GM17.dwg 04/02/99 HJP

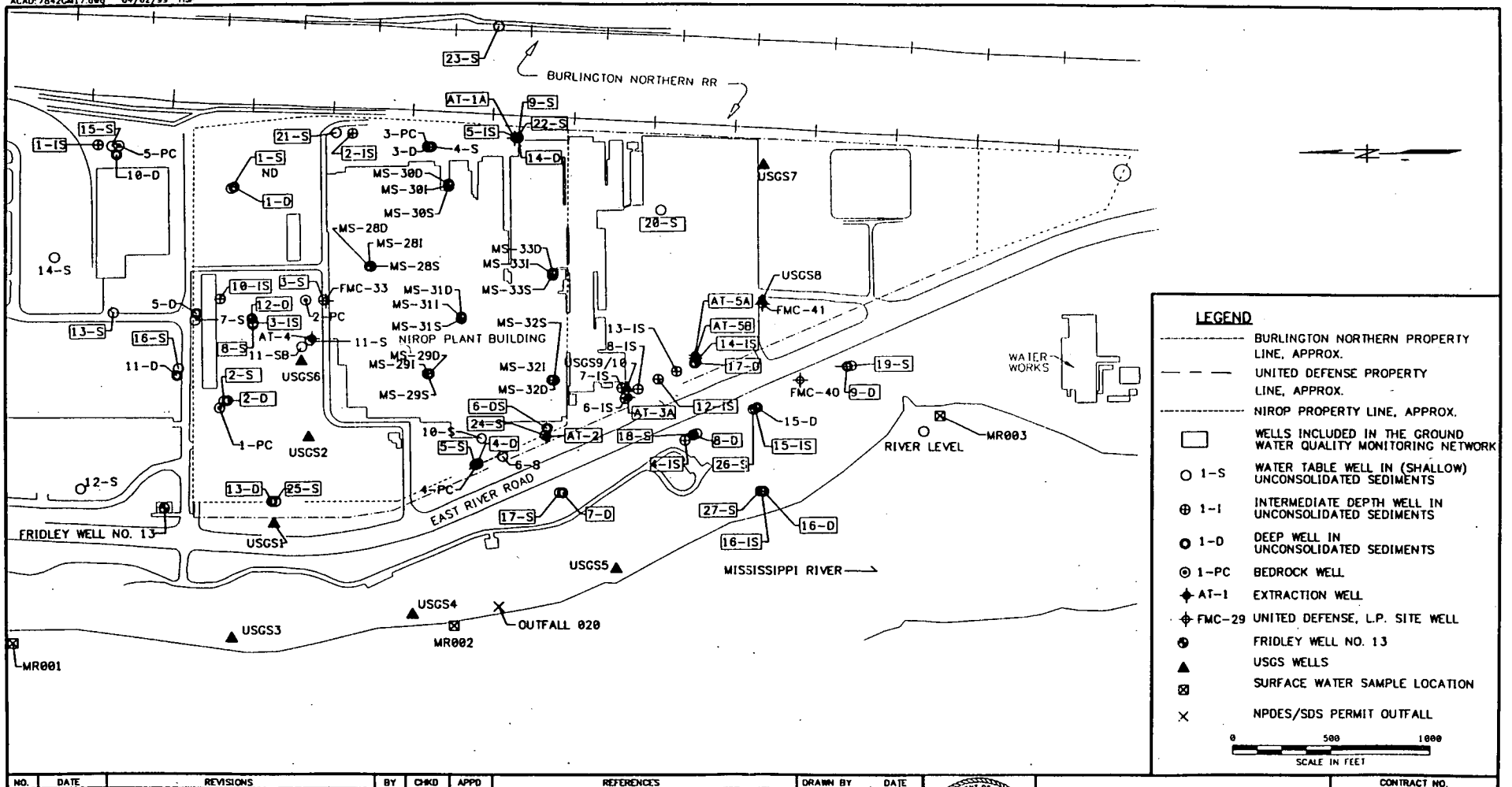

LEGEND

- BURLINGTON NORTHERN PROPERTY LINE, APPROX.
- UNITED DEFENSE PROPERTY LINE, APPROX.
- NIROP PROPERTY LINE, APPROX.
- WELLS INCLUDED IN THE GROUND WATER QUALITY MONITORING NETWORK
- 1-S WATER TABLE WELL IN (SHALLOW) UNCONSOLIDATED SEDIMENTS
- 1-I INTERMEDIATE DEPTH WELL IN UNCONSOLIDATED SEDIMENTS
- 1-D DEEP WELL IN UNCONSOLIDATED SEDIMENTS
- 1-PC BEDROCK WELL
- AT-1 EXTRACTION WELL
- FMC-29 UNITED DEFENSE, L.P. SITE WELL
- FRIDLEY WELL NO. 13
- USGS WELLS
- SURFACE WATER SAMPLE LOCATION
- NPDES/SDS PERMIT OUTFALL

0 500 1000
SCALE IN FEET

NO.	DATE	REVISIONS	BY	CHKD	APPD	REFERENCES

DRAWN BY KW DATE 3/25/99
CHECKED BY DATE
COST/SCHED-AREA
SCALE AS NOTED

MONITORING LOCATIONS
NIROP FRIDLEY, MINNESOTA

CONTRACT NO. 57
APPROVED BY DATE
APPROVED BY DATE
DRAWING NO. FIGURE 4-1
REV. 0

FORM CADD NO. SDIV_BHDWG - REV 0 - 1/20/98

United Defense

ATTACHMENT 1A

United Defense LP
Minneapolis, MN

NPDES Monitoring Form Permit No. MN0000710

Date: 2/29/00

Time: 9:15

Weather Conditions: Sunny 50° F

	Outfall 020	Outfall 030
Temperature °C (limit 26.5)	11.3	7.6
Flow	881 gpm	3.5 gpm
Clear Effluent	Clear ☑	Clear ☑
pH (EPA method 150.1) Meter calibration 7 ☑ 10 ☑	8.1	7.8
Oil Sheen	Not Present ☑	Not Present ☑
Addition Parameter _____		Copper sample 0013

Sampling Technician Signature: Tim Ruda

Field Notes:

United Defense

United Defense LP
Minneapolis, MN

NPDES Monitoring Form Permit No. MN0000710

Date: 1/31/00

Time: 15:15

Weather Conditions: Sunny 28°F

	Outfall 020	Outfall 030
Temperature °C (limit 26.5)	8.3	3.7
Flow	364 51395	3.7 786774
Clear Effluent	Clear ☑	Clear ☑
pH (EPA method 150.1) Meter calibration 7 ☑ 10 ☑	7.9	7.8
Oil Sheen	Not Present ☑	Not Present ☑
Addition Parameter _____		

Sampling Technician Signature: [signature]

Field Notes:

(4A)

ATTACHMENT 4A 3A

pHreeGUARD 130u

CALGON C

CALGON CORPORATION

P.O. Box 1346
Pittsburgh, PA 15230-1346
Phone--(412)494-8000

MATERIAL SAFETY DATA SHEET

Section 1. PRODUCT IDENTIFICATION

PRODUCT NAME: **pHreeGUARD 1300**

CHEMICAL DESCRIPTION: Aqueous polymer solution
PRODUCT CLASS: Water treatment
MSDS CODE: 0516-05-31-96

Section 2. INFORMATION ON INGREDIENTS

Chemical Name	CAS Number	% by Weight	OSHA PEL	ACGIH TLV

No ingredients listed in this section

This product is not considered to be hazardous according to the criteria of the U.S. Federal OSHA Hazard Communication Standard (29 CFR 1910.1200) and is not a controlled product under WHMIS in Canada.

Section 3. HAZARDS IDENTIFICATION

********** EMERGENCY OVERVIEW **********

This product poses little or no immediate hazard.

****

PRIMARY ROUTES OF ENTRY: None

TARGET ORGANS: None

MEDICAL CONDITIONS AGGRAVATED BY EXPOSURE: Unknown

POTENTIAL HEALTH EFFECTS:

EYE CONTACT: This product would not be expected to produce irritation upon contact with the eye.

SKIN CONTACT: The product is not expected to cause skin irritation upon contact. No data is available to suggest that this product may produce an allergic skin reaction or be absorbed through the skin in harmful amounts.

INGESTION: This product would be expected to be practically non-toxic by ingestion.

Continued on Page 2

INHALATION: This product is not expected to present an inhalation hazard.

SUBCHRONIC, CHRONIC:
No applicable information was found concerning any potential health effects resulting from subchronic or chronic exposure to the product.

CARCINOGENICITY:
NTP:
No ingredients listed in this section
IARC:
No ingredients listed in this section
OSHA:
No ingredients listed in this section

Section 4. FIRST AID MEASURES

EYE CONTACT: Not expected to require first aid measures. However, follow good industrial hygiene practices and, in case of contact, flush eyes with plenty of water.

SKIN CONTACT: Not expected to require first aid measures. However, follow good industrial hygiene practices and, in case of contact, wash affected skin areas thoroughly with soap and water.

INGESTION: Not an expected route of overexposure. If swallowed, do not induce vomiting. Call a physician. This product would be expected to be practically non-toxic by ingestion.

INHALATION: Not an expected route of overexposure.

Section 5. FIRE-FIGHTING MEASURES

FLASH POINT: > 200°F (TCC)
This product is not by definition a "flammable liquid" or a "combustible liquid".

LOWER FLAMMABLE LIMIT: Not available UPPER FLAMMABLE LIMIT: Not available

AUTO-IGNITION TEMPERATURE: Not available

EXTINGUISHING MEDIA: Use extinguishing media appropriate for the surrounding fire.

FIRE-FIGHTING INSTRUCTIONS: Exercise caution when fighting any chemical fire. A self-contained breathing apparatus and protective clothing are essential.

FIRE & EXPLOSION HAZARDS: Product emits toxic gases under fire conditions.

DECOMPOSITION PRODUCTS: Thermal decomposition or combustion may produce carbon monoxide, carbon dioxide, nitrogen oxides, and sulfur oxides.

NFPA RATINGS: Health = 0 Flammability = 1 Reactivity = 0 Special Hazard = None

Hazard rating scale: 0=Minimal 1=Slight 2=Moderate 3=Serious 4=Severe

Continued on Page 3

pHreeGUARD 1300

Section 6. ACCIDENTAL RELEASE MEASURES

STEPS TO BE TAKEN IF MATERIAL IS RELEASED OR SPILLED: Wearing appropriate personal protective equipment, contain spill, collect onto inert absorbent and place into suitable container. Spilled product may make floor slippery; spills should be cleaned up immediately to prevent falls.

Section 7. HANDLING AND STORAGE

HANDLING: As part of good industrial and personal hygiene and safety procedure, avoid all unnecessary exposure to the product and ensure prompt removal from eyes, skin and clothing.
If product freezes, it does not lose its integrity. Restore for use by warming, slowly until product thaws, and agitating.
Wash thoroughly after handling.
Keep container closed when not in use.

STORAGE: The recommended minimum storage temperature is 40°F.

Section 8. EXPOSURE CONTROLS / PERSONAL PROTECTION

PERSONAL PROTECTIVE EQUIPMENT:

EYE/FACE PROTECTION: Chemical splash goggles recommended as a good industrial hygiene practice.
SKIN PROTECTION: No special requirement.
RESPIRATORY PROTECTION: None required.

ENGINEERING CONTROLS: No specific recommendations.

Section 9. PHYSICAL AND CHEMICAL PROPERTIES

BOILING POINT: Not available

VAPOR PRESSURE: Similar to water

VAPOR DENSITY (air=1): Similar to water

%VOLATILE BY WEIGHT: ~ 73 (water)

APPEARANCE AND ODOR: Clear, pale yellow liquid.

SOLUBILITY IN WATER: Complete

SPECIFIC GRAVITY: 1.19 - 1.23 @ 25°C

pH: 4.5 - 5.5 @ 25°C

FREEZING POINT: 28 - 35°F

Section 10. STABILITY AND REACTIVITY

CHEMICAL STABILITY: Stable

HAZARDOUS POLYMERIZATION: Will not occur

Continued on Page 4

pHreeGUARD 1300

CONDITIONS TO AVOID: No specific information.

INCOMPATIBILITY: Strong oxidizers and reducers

DECOMPOSITION PRODUCTS: Thermal decomposition or combustion may produce carbon monoxide, carbon dioxide, nitrogen oxides, and sulfur oxides.

Section 11. TOXICOLOGICAL INFORMATION

ON PRODUCT:
No information available on the formulated product.

Section 12. ECOLOGICAL INFORMATION

ON PRODUCT:
No information available on the formulated product.

ON INGREDIENTS:

Chemical Name	Aquatic Toxicity Data
Anionic copolymer	48 hr LC_{50} (Daphnia magna): 2,800 ppm 96 hr LC_{50} (bluegill sunfish): > 10,000 ppm 96 hr LC_{50} (rainbow trout): 4,900 ppm

Section 13. DISPOSAL CONSIDERATIONS

RCRA STATUS: Discarded product, as sold, would not be considered a RCRA Hazardous Waste.

DISPOSAL: Dispose of in accordance with local, state and federal regulations.

Section 14. TRANSPORT INFORMATION

DOT CLASSIFICATION:
Class/Division: Not restricted
Proper Shipping Name: Not applicable
Label: None
Packing Group: Not applicable
ID Number: Not applicable

Section 15. REGULATORY INFORMATION

OSHA Hazard Communication Status: Nonhazardous
TSCA: The ingredients of this product are listed on the Toxic Substances Control Act (TSCA) Chemical Substances Inventory.

Continued on Page 5

pHreeGUARD 1300

CERCLA reportable quantity of EPA hazardous substances in product:

Chemical Name	RQ
No ingredients of this product have CERCLA reportable quantities.	

Product RQ: Not applicable (Notify EPA of product spills exceeding this amount.)

SARA TITLE III:

Section 302 Extremely Hazardous Substances:

Chemical Name	CAS #	RQ	TPQ
There are no SARA 302 Extremely Hazardous Substances in this product.			

Section 311 and 312 Health and Physical Hazards:

Immediate	Delayed	Fire	Pressure	Reactivity
[no]	[no]	[no]	[no]	[no]

Section 313 Toxic Chemicals:

Chemical Name	CAS #	% by Weight
[illegible] chemicals in this product.		

Section 16. OTHER INFORMATION

HMIS RATINGS: Health = 0 Flammability = 1 Reactivity = 0
Personal Protective Equipment = A

Hazard rating scale: 0=Minimal 1=Slight 2=Moderate 3=Serious 4=Severe

MSDS REVISION SUMMARY: Supersedes MSDS issued on 5/6/93.

While this information and recommendations set forth herein are believed to be accurate as of the date hereof, CALGON CORPORATION MAKES NO WARRANTY WITH RESPECT HERETO AND DISCLAIMS ALL LIABILITY FROM RELIANCE THEREON.

PREPARED BY: P.J. Maloney

Process Flow Diagram

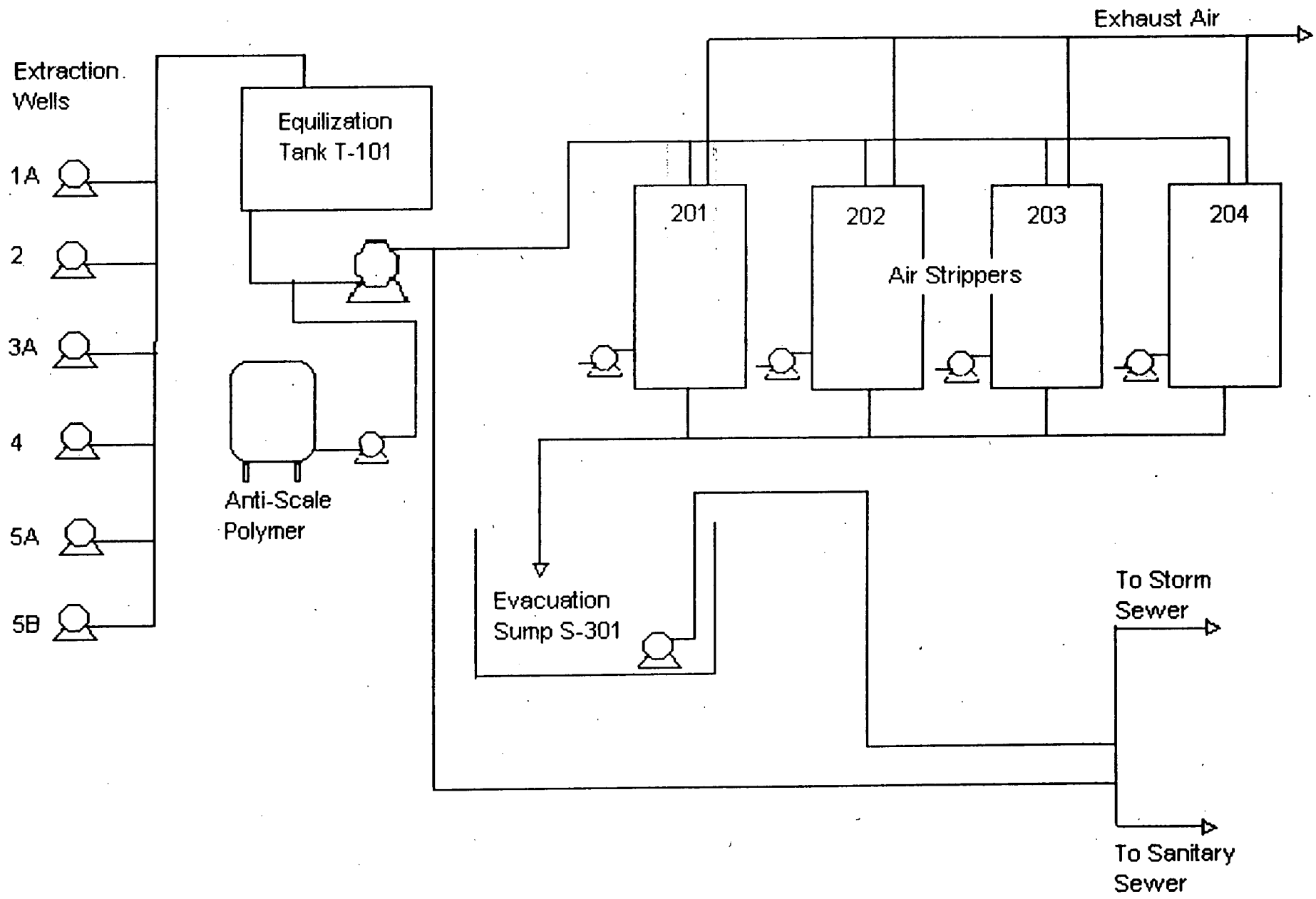

ATTACHMENT 1F

APPENDIX B

WELL SELECTION MEETING NOTES

NIROP FRIDLEY DATA QUALITY OBJECTIVES
PROBLEM B: EFFECTIVENESS OF CAPTURE WELL SYSTEM
and
PROBLEM C: GROUNDWATER MONITORING FOR OVERALL CONTAMINATION AT NIROP (I.E., LONG TERM MONITORING)

Notes:

- This version of the notes represents all changes made in accordance with meetings and telephone discussions up to and including the 08-21-01 teleconference. A record of meetings and teleconferences is provided in Attachment 1.

- The partnering Team (PT) agrees that development of Data Quality Objectives (DQOs) is important to focus the planning effort and to obtain as much agreement as possible concerning the strategy and criteria for completing each investigative effort. The team also acknowledges that DQO process outputs are commonly based on assumptions that could be invalid or the DQOs themselves could be flawed, for example, because of incomplete knowledge of site conditions at the time of planning. If this proves to be the case, adjustments might be required to complete an investigation satisfactorily. Deviations from the plan should be documented and justified.

- Where feasible, reference is made to existing documents to minimize the amount of detail that needed to be recorded. To save time, issues already established or addressed previously, such as budget and schedule constraints, were deliberately omitted unless they would have bearing on the development of strategies for solving the problems.

- Quality control (QC) samples (type, number, etc.) will be specified in accordance with Environmental Protection Agency (EPA) and Minnesota Pollution Control Agency (MPCA) guidance in the Long Term Monitoring (LTM) work plan (WP).

- The DQOs began with a review of past activities and a discussion of the problem to be solved at Fridley. It was quickly determined that there is more than one problem. The problems were separated into problems A, B, C, and D. If more problems are identified at a later date, they will be labeled alphabetically as was done for the first four problems. The notes in this document begin with a statement of general DQOs and are followed by the DQOs specific to Problem B, Effectiveness of Well Capture System. The DQOs for the other problems are provided in separate documents.

- Formatting and renumbering of attachments necessary to render this set of DQOs self-consistent was conducted by T. Johnston (TtNUS) after the notes were approved on 08-21-01. Changes made were minimal and do not affect the technical content beyond the approved changes in the 08-21-01 teleconference.

DQO Step 1. State the Problem (General Section)

Conceptual Site Model (CSM): The Naval Industrial Reserve Ordnance Plant, Fridley (NIROP) has been located in the northwestern portion of the Minneapolis/St. Paul Metropolitan area, in the city of Fridley, Minnesota since 1941. The NIROP facility was the first government-owned, contractor-operated (GOCO) facility. The facility is divided into two (2) areas on the basis of ownership. The government owned NIROP site (NIROP) consists of approximately 80.3 acres to the north. This area consists of the ordnance manufacturing building and the property to the north of the building, known as the "North 40." The NIROP is contiguous and adjacent to buildings and property just to the south, owned and operated by United Defense, Limited Partnership (UDLP). The UDLP property is 55.4 acres. Anoka County Riverfront Park (ACP) to the west along the Mississippi River consists of approximately 59.8 acres. The NIROP site is situated 30 feet above and 800 feet east of the Mississippi River, and approximately 4000 feet up river from the Minneapolis Water Works river intake. Past disposal activities on the NIROP facility have resulted in soil and ground water contamination. There is trichloroethene (TCE) contamination in NIROP

upgradient wells (shallow, intermediate, deep and bedrock aquifers) indicating contamination may be coming onto the NIROP site. Ten-ppb contour lines were drawn for shallow/intermediate and deep zones:

Shallow = 20' - 30'	(approximate depth)
Intermediate = 30' - 80'	(approximate depth)
Deep = 80' - 120'	(approximate depth)
Bedrock = 120' - 180'	(actual depth)

Four extraction wells were installed in 1992 and two additional wells were installed in 1995 for hydraulic containment of the TCE plume (capture and containment). Extra wells will be added this year (2001) to prevent apparent "blow-by" of TCE past extraction wells. The area of contamination beyond the capture well system is not dissipating as expected. The Minneapolis Water Works downstream of the site on the Mississippi River has experienced a maximum TCE concentration of 1.9 ug/L. The UDLP has a plume and extraction wells on their property, also. Regulators are working with UDLP to get them up to the same level as the Navy with regard to water treatment/containment.

Pages 1 and 2 of he Record of Decision (ROD) state:

> "This action addresses the principal threat posed by the NIROP by preventing endangerment of public health, welfare, or the environment by implementation of this Record of Decision through hydraulic containment and recovery of all future migration of contaminated ground water from the NIROP and by recovery, to the extent feasible, of contamination downgradient of the NIROP."

Also on page 2, the ROD speaks of "effective" hydraulic containment in the context of " ...hydraulic containment and recovery of all future migration of contaminated ground water from the NIROP..." The ROD goes on to say on page 3:

> "A portion of the aquifer within the Anoka County Parkland closest to the Mississippi River may not fall within the zone of capture of the ground water recovery system. However, should this occur, contaminants in any uncaptured portion of the aquifer are expected to dissipate by natural means over time to levels that are protective of human health and the environment..."

The five-year review speaks of "substantial" containment. This term was used in the five-year review to reflect that "total" (i.e., 100%) hydraulic containment, as required by the ROD, is not likely to be provable. The meaning of "substantial" is not agreed upon. Total containment is interpreted by the partnering team as to not knowingly leave blow-by. How this is determined is addressed under Problem B, Effectiveness of Well Capture System.

Issue: How to define the degree of containment necessary to achieve substantial hydraulic containment must be decided.

Based on an overly conservative analysis, which has since been deleted from annual monitoring reports, it was once estimated that up to 1 ton per year of TCE was flowing into the Mississippi River. The Navy extraction wells have removed a total of 12.5 tons of TCE between 1992 and 1999

Based on the five-year review, a recommendation was made to evaluate whether a remedy existed for the Anoka County Park (ACP) plume, and to evaluate the remedy (pp. 8 and 9 of the 5-yr review report).

At the 5-yr Review the following objectives were reiterated from the ROD:

> "Installation and operation of a groundwater containment and recovery system to hydraulically contain TCE contaminated groundwater to prevent further migration and to ultimately restore groundwater quality in the aquifer to MCLs. Installation and operation of a groundwater containment and recovery system to recover, to the extent feasible, TCE contaminated groundwater beneath Anoka County Park."

The Five Year Review goes on to recommend the following related to ACP:

- "...
- ...

- The Navy will determine if any potential sources of contamination exist in Anoka County Park that may impact residual groundwater contamination levels in the area where residual groundwater contamination is present by September 1999.
- ...
- The Navy will determine what can be done to promote reduction of residual groundwater contamination in Anoka County Park to a level that will significantly reduce residual groundwater contamination, and determine if a response action will enhance the effectiveness of the selected remedy as it relates to residual groundwater in Anoka County Park by September 1999, and if warranted, will conduct a response action that will significantly reduce residual groundwater contamination and enhance the effectiveness of the selected remedy as it relates to residual groundwater contamination from NIROP in Anoka County Park by September 2000."

Note the emphasis on contamination *leaving NIROP* as opposed to *entering the river.*

Assumption: Preventing NIROP groundwater contamination from leaving the property is protective of the Mississippi River.

Assumption: FMC/UDLP contamination is distinct from NIROP contamination, even though it could be difficult to separate the two.

Assumption: Soil is outside the scope of this groundwater (GW) operable unit (OU).

Assumption: The Prairie du Chien aquifer is not contaminated.

Note: There are four basic problems and hence four different decision statements. From this point on, each problem is dealt with individually, beginning on the next page. The problems are as follow:

1. **Problem A:** Anoka County Park Vegetable Oil VOC Reduction Pilot Study
2. **Problem B:** Effectiveness of Capture Well System and Capture Zone Analysis
3. **Problem C:** Groundwater Monitoring for Overall Contamination at NIROP (i.e., LTM)
4. **Problem D:** Exit Strategy (identified during the July DQO meeting)

The Effectiveness of Capture Well System and Capture Zone Analysis Problem is presented here. The other problems are presented in separate DQO notes, one set for each problem.

Consensus #1 (C1): The DQO notes will not be meeting minutes. The DQO notes will be an ongoing (work in progress) document which documents the meeting's decisions.

C2: The work of each day will be drafted after each day's meeting and reviewed at the beginning of the next morning. The team will have a summary of comments at the end of each am and pm. The team will recap the meeting's decisions at meeting closure to ensure we get team buy-in on site.

C3: Be trustful of one another.

C4: Changes to DQO notes: Insert a footnote on the bottom of DQO notes page, indicating the date the notes were approved.

Action Item #1 (AI #1): Team will be notified via email if there is a conference call scheduled to address an action item. Team members will decide if they will be involved.

AI2: Initiating party of conference call (AI #1) will notify all involved parties that a conference call will take place (including date, time, topic).

PROBLEM B: EFFECTIVENESS OF CAPTURE WELL SYSTEM

DQO Step 1. State the Problem

See the DQO Step 1. General Section at beginning of this document

Original emphasis of project: Capture system was installed per the Record of Decision (ROD) to prevent movement of the plume off the NIROP property. It was assumed that in doing so the plume would dissipate downgradient and reduce discharge to the river.

Assumption: There is no intent to change the ROD as a result of or as part of this phase of the project.

DQO Step 2. State the Decision

Study Question:
Is the capture system with the newly installed wells effective at preventing groundwater contamination from passing through the capture system?

Potential Actions:
1. If adequate capture is effected:
   - Continue to use the system to prevent migration of contaminated groundwater to the river.
   - Optimize the cost-effectiveness of the well capture system while maintaining adequate capture. Potential factors for consideration include: optimizing the number of capture wells that must be operated, optimizing the pumping rate of the capture wells, optimizing the number of monitoring wells that must be sampled, optimizing the frequency of sampling, etc., to reduce operating costs.
2. If adequate capture is not effected, consider enhancing the system further to increase the degree of contaminated groundwater capture.

Issue: Ultimately, the Navy would like to shut the pump and treat containment system off (exit strategy). We will deal with this question later. The ROD says that the ultimate goal is that all groundwater contaminant concentrations must be reduced to their MCLs throughout the aquifer. It may be found that this is 'technically impracticable' (TI).

ROD language for Issue, above. The text is provided here (from page 44 of the ROD):
"... At this site, there is a medium to high uncertainty that cleanup targets can be achieved within reasonable time frame. Despite extensive recovery efforts, very low concentrations of TCE may persist in the aquifer above the target cleanup level. If at some time in the future, the Navy believes that achieving the target cleanup level (MCL) is technically impracticable, at that time the Navy will apply for an Alternate Concentration Limit (ACL) in accordance with guidance for implementation of ACLs. The Navy plans to use a mathematical formula to determine if concentrations have dropped to an asymptotic level. This asymptotic level will be used to show technical impracticability...In addition, if it is shown, based on the facts at the time, that upgradient sources are contributing VOCs to the ground water, the U.S. Navy will request approval of an alternate cleanup target level or approval to terminate ground water recovery operations."

Decision Statement:
Determine whether NIROP groundwater contamination is substantially prevented from leaving the NIROP property after startup of new wells.

If it is, continue to optimize the capture well system

If it is not... evaluate the need for enhancing the system.

DQO Step 3. Inputs to the Decision

Measurements to be made:

- Hydraulic heads
- Chemical Concentrations (8 analytes proposed by Navy - TCE and daughter products - MPCA and EPA have to agreed to this). Analytes are tabulated below with some additional information.
- Physical parameters (aquifer parameters (pump test data))
- Stratigraphy
- Removal rate (how much chemical is removed in a given time)
- Draw down
- Historical data (Hydraulic and chemical)
- Pumping rate
- Borehole flow velocity
- Tracer study (could help interpret data)
- 3D Numerical Model - MOD Flow
- Plume dimension and location
- Concentrations that constitute contamination and delineate the plume

Analyte List

Analyte[1]	Frequency of Detection (all data to date)	Range of Detection (ug/L)	Location of Maximum Concentration (date and round in [ ])
1,1,1-Trichloroethane	202/1436	0.2 – 690	003-TW-033-01
1,1-Dichloroethane	418/1436	0.2 – 170	M05PC-[90_R11]
1,1-Dichloroethene	142/1436	0.2 – 380	003-TW-033-01
cis-1,2-dichloroethene	143/317	0.2 – 2440	18-S-[88_R01]
trans-1,2-dichloroethene	100/385	0.2 – 4700	18-S-[86_R04]
Tetrachloroethene	484/1436	0.2 – 560	PC-5-[99_R11]
Trichloroethene	1187/1436	0.4 – 140000	GW-01
Vinyl Chloride	32/1278	0.2 – 40	003-TW-P09-01

Data Analysis Tools:

Note: Data analysis tools discussed in Attachment 2 will be used in a weight-of -evidence approach. Multiple combinations of these tools may be used to evaluate capture. Hal Davis (USGS) presented a capture zone analysis to help the Partnering Team understand the site physical model and the utility of aquifer test analyses, flow nets, etc. This document is filed separately.

Note: The partnering team approved the implementation of the USGS' plan titled "Proposal for Determining the Capture Area of Recovery Wells" (see meeting handout).

DQO Step 4. Define the Study Area Boundaries

Note: The Navy is responsible only for the NIROP site groundwater plume. The boundaries need to be defined.

Note: Delineation of the southern NIROP plume should be worked out between UDLP, Navy, MPCA and EPA. MPCA has offered to mediate a discussion among the parties.

Suggestions:

Current 100-ppb TCE contour is the part of the plume to be evaluated.

Geographical Boundaries:

Area bounded by:

- Capture wells AT-9 and AT-5A/B plus capture zone to the outside of those wells.
- Region upgradient of capture well line and downgradient of capture well line.

Assumption: It is assumed that some contamination could "leak" past the exterior capture wells along the north and south edges of the capture well line, but the amount of contamination doing so is minimal compared to the contaminant concentrations bounded by the 100 ppb TCE contour line.

Assumption: The levels of contamination at the edge of the plume (area between 100 ppb and 5 ppb TCE) along the north and south edges of the capture well line will continue to decline with time compared with the known contaminant concentrations between wells AT-9 and AT-5A and AT-5B.

Issue: The extent of the upgradient and downgradient regions must be established.

Populations:
Groundwater both upgradient and downgradient of capture well line in the shallow, intermediate, and deep aquifer zones (all are interconnected to some extent).
There are shallow, intermediate and deep plume monitoring intervals within the aquifer system. The shallow and intermediate zones are relatively separated (limited vertical mixing).

Action Item: Temporal boundary: shall be moved to Problem D, Exit strategy, DQO

DQO Step 5. State the Decision Rule

Decision Rule:
If the capture well system is effective at substantially preventing the flow of contaminated groundwater from NIROP beyond the capture well system, then optimize the system by selecting different pump rates, deselecting wells from the list of monitoring/pumping, etc., as appropriate based on best professional judgment using data analysis. If the capture well system is not effective at substantially preventing the flow of contaminated groundwater from NIROP beyond the capture well system, evaluate potential system enhancements, source control, etc., as appropriate.

Note: Effectiveness will be judged on a weight of evidence based on the analysis tools identified in DQO Step 3, as deemed appropriate. Weight of evidence and best professional judgment will be based primarily on decision making tools of greatest value as identified in Attachment 1. Weight of evidence will include the following evaluations:

- Cone of depression
- Drawdown data
- Final surface after pumping (establish contours first then add flowpath lines).

After completing this evaluation, USGS will write a report describing the methods of analysis and presenting conclusions regarding capture zones. A conclusion regarding the degree on containment will be made. The report will be reviewed by technical team members.

DQO Step 6. Establish Error Tolerances

Because of the great number of variables involved in evaluating the capture well system effectiveness, it is not feasible to use the standard DQO statistical approach to establishing the sampling plan. Instead,

as stated in DQO Step 5, a weight of evidence approach will be used. To the extent that statistical tools are judged to be useful in evaluating data and characteristics of this problem, they may be invoked. Confidence limits, other statistical performance requirements, etc., will be established at that time.

DQO Step 7. Optimize the Design

Well Selection Meeting
(DQO Meeting #3)
NIROP Fridley
Charleston, SC
March 6 - 7, 2002

(Finalized per 6/26/02 tele-con)

Attendees

Jeff Meyers – Navy
Cliff Casey – Navy
John Betcher – MPCA (1, 2)
Rick Kuthau – EPA contractor (2)
Hal Davis –USGS
Venky Venkatesh -CH2MHill/CCI
Keith Henn – TtNUS (2)
Mark Sladic - TtNUS (2)
Tom Johnston - TtNUS
Paul Rice - ICLD
Craig Thomas - US EPA V (2)

Notes:
(1) J. Betcher has proxy to discuss any issue and make decisions for MPCA, because David Douglas could not attend the meeting.
(2) Participants in the 6/26/02 teleconference.

The purpose of this meeting was to select monitoring wells, sampling procedures, and other related items to complete NIROP Fridley data quality objectives (DQOs) Problem C. The results of this meeting will be the basis for the 2002 RAWP. The "previous DQO meetings" (including decision rules) noted in this document refer to meetings held on March 19-23, 2001 and July 17-19, 2001.

Tools were discussed to assist in the well selection process. Based upon discussion at the previous DQO meetings, geostats were introduced by the Navy as a tool. The EPA and MPCA raised questions about the validity of using geostatistics or other computerized means (e.g., MAROS software) of evaluating the site data given the complexity of the geology and hydrogeology at the site. MPCA and EPA expressed concerns that the geostatistical evaluation of the monitoring network that was done in the past was no longer relevant. However, as identified in the meeting, the Navy was prepared to discuss an updated geostatistical evaluation of the site which included the numerous additions made to the monitoring network based upon the 1999 AMR data. MPCA and EPA asked that if the Navy intends to identify new information or tools in the meeting that it be sent out ahead of the meeting for review. The MPCA expressed the concern that the complexity of the site hydrogeology may violate some of the assumptions of geostatistics. For purposes of this meeting, it was agreed that only hand contouring (triangulation and no geostats) and professional judgement will be used to establish contaminant isoconcentration contours. The discussion did cover the use of geostatistics in the future, including the possibility of the team receiving training in geostatistics. However, this decision was postponed until later in the meeting. At the end of the meeting, it was determined by the group that since the team had been successful in identifying monitoring purposes and needs for individual wells, the use of geostatistics was not necessary and would not be pursued any further. The group decided that MAROS software will not be used.

Assumption: TCE concentrations are assumed to be the best indicator parameter of plume size, shape, and location at this time since the majority of VOC contamination in ground water is TCE. This will be tested in the 2001 Annual Monitoring Report (AMR). All eight COCs (which include TCE degradation

products) identified in previous DQO meetings will be evaluated. Unless this evaluation shows that the assumption is not correct (e.g., if daughter products of TCE increase or are expected to increase based on remedy) TCE will be used as the indicator parameter for the NIROP plume for the AMR reports.

Assumption: In previous DQO meetings it was agreed that the 100 ppb TCE contour would be used to establish the capture zone performance, at least until site is near closure, at which time a more stringent criterion regarding the identification and bounding of contamination will apply. This assumption will be evaluated annually in the AMR (March, 2002).

Assumption: The well selection performed is based up 1999 AMR data and 2001 potentiometric surface contour maps. It was determined that this data is the most current agreed representation of the site conditions.

Assumption: Annual reviews of well selection will take place in each AMR. Modifications will be made based upon new or more complete data sets, as needed.

Assumption: It was noted in the 6/26/02 telecon that many wells have multiple monitoring purposes (as defined below). If a well is to be eliminated from the monitoring network in the future all of these purposes must be evaluated before it can be eliminated.

Development of a Decision Tree

The team discussed the types of information needed to achieve the project objectives. Later the team decided that, instead of dealing in the abstract, the team should actually go through a well selection process. Through this process the factors that are important would tabulated to develop a decision tree. An attempt was made to capture the thinking behind well selection and to establish how data would be used to support decision making for the 6 decision rules identified in previous DQO meetings. During the selection process the following general factors were identified with the understanding that particular circumstances could cause other factors to be important:

- Relative well concentrations (a desire to bias toward wells with higher concentrations wells)
- Upgradient concentrations
- Proximity of wells to each other (a concern over redundant data due to wells located close together)
- Bracketing important concentration contours with "clean" and "dirty" samples.
- Historical data, especially temporal and spatial trends
- Geology of the site (e.g., the influence of low permeability zones on contaminant movement)
- Representativeness of wells for various purposes (e.g., the capture system vs. plume edge)
- Data variability (e.g., site variability, sampling variability)
- NIROP versus non-NIROP contamination

Where appropriate, wells were classified as cross-gradient, upgradient, in-plume, etc (Tables 1 and 2). Some wells were selected based on inclusion in more than one classification and may therefore have multiple classifications. The text below ties the well selections to the 6 decision rules and provides rationale.

Decision Rule #C1 (Capture system performance):

Shallow Wells

These wells are listed in Table 1

Because MS-40S and MS-40I both monitor the shallow monitored interval, and MS-40S has historically had higher concentrations between the two wells, it was decided that MS-40S would adequately monitor the 100 ug/l contour and MS-40I would not need to be monitored.

Well data from UD-63S will come at the courtesy of UDLP. See Table 3 for this information.

Well 2-S was selected over 16-S as the better well to measure the 100 ppb TCE contour in this area. If future evidence (e.g., hydraulic data) does not validate this assumption, this can be reconsidered.

MPCA plans to have UDLP install wells downgradient of the paint shop where 12,000 ppb TCE was encountered.

The Navy will need copies of UDLP reports to understand if there is a possible influence of UDLP contamination on NIROP plume conditions. The data will be evaluated to determine if it will be useful to attempt to separate UDLP from NIROP-related contamination. See notes in Tables 1, 2, and 3 regarding NIROP wells which may represent UDLP contamination.

Action : Navy must request UDLP reports from UDLP (or the MPCA).

The Navy noted that based upon negotiations with UDLP, UDLP will perform O&M responsibilities at the NIROP for four years.

Action: Navy should elevate the resolution of separating UDLP and NIROP plumes through David Douglas of MPCA.

Intermediate Wells:
Wells are identified in Table 1.
There is no aquifer material in the intermediate interval to the south of AT-5A/B, thus there are no wells in this area.

The group determined, that there is a data gap in the intermediate zone north of MS-43I. North of this well no intermediate wells exist to determine the 100 ug/l and other lesser concentration contours. Contours in this area are inferred on AMR maps. A note of this monitoring data gap was made for latter discussion. This data gap will be discussed in a separate conference call. As noted in the summary of the 5/13/02 teleconference call this area and the appropriate amount of data needed to monitor this area is still being evaluated by the partnering team.

Deep wells

Wells are presented in Table 1.

Assumption: The group hasn't completely established the degree of data variability and trends in a select number of wells. The team will continue to track the information collected to better assess this. Nevertheless, the characteristics are understood enough based upon the 1999 AMR data to select wells at this time.

Prairie du Chien Wells
These wells are discussed separately below.

Decision Rule C2 (Compliance Wells:)
Concentrations in these wells will be compared to surface water standards. Annual sampling should be conducted to provide enough data to establish trends and facilitate these comparisons. The wells are identified in Table 2.

Decision Rules C3 (Change in Plume Size, Shape, etc.) and C4 (Meet Cleanup Criteria)

Shallow Wells

Expectation: "Exterior" wells can be dropped from monitoring as the plume shrinks. No decision criteria were developed for how decisions would be made to drop monitoring wells.

The isoconcentration that will be used to bound the plume for this decision is 5 ppb. This was based upon assumption identified earlier (page 1) indicating that TCE is a sufficient indicator parameter. If this assumption proves to be invalid in each year's AMR then further evaluation will be needed. Other factors than simply TCE will need to be taken into account to make these decisions. The concentration of other

compounds will need to be evaluated and the combined risk from multiple compounds will be part of the decision. It might be possible that criteria are exceeded for compounds other than TCE. The issue of verification of results and the number of sampling events required to verify that concentrations are below limits has not been discussed.

Based upon stable concentrations, upgradient wells have been given a low priority until final closeout of the site, at which time better definition of what contamination might be coming onto the site will become an important consideration. As a result, less frequent sampling can be used on these wells.

In-plume wells were selected for the shallow aquifer and are presented in Table 2.

Assumption: Since a capture system is in place monitoring source areas within the plume is less of a priority and can be monitored less frequently. Therefore it was agreed that the sampling frequency for in plume wells should be once per 5 years. The next sample round should be in 2006.

Discussion of ACP "in-plume" wells was deferred to later and are discussed in detail below.

Intermediate Wells

Wells were selected and are presented in Table 2.

Well 3-IS is a dual purpose well (in-plume well and plume edge to define the 100 ppb of TCE) is will be sampled annually.

A monitoring gap North of MS-43I was identified by the group in the intermediate zone. The monitoring gap results in uncertainty in location of the 100 ug/l and other concentration contours. The 100 ug/l contour is being used to evaluate system performance. This is being evaluated by the partnering team at the present time.

Deep Wells

Wells were selected and are presented in Table 2.

Based upon the 6/26/02 telecon, it was determined that well 4-D will be sampled every two years. The sole purpose of including this well is to define the 5 ppb line for TCE.

Sampling frequencies for MS-29D and MS-31D were not discussed in the mtg. Consistent with other in-plume wells a sampling frequency of 1/5 yr is recommended by TtNUS (see Table 3).

Prairie du Chien Wells

These wells are discussed separately below.

Decision Rules C5 (Enhance System Performance or Evaluate ACL's) and C6 (Technical Impracticability)

Well selection for this decision rule will be addressed in the ROD and 5 Year review process. If it is agreed by all parties that alternate concentration limits should be considered , the 5-year monitoring interval will not be frequent enough and will be addressed later.

Prairie du Chien Wells –Decision Rules C3, C4 and C6

TCE concentrations have ranged from non-detect to 7.9 ppb (5.5 ppb was incorrectly noted in the meeting) in wells monitored. PCE was detected at 560 ppb in well 5-PC (upgradient to NIROP).

Based on these results (especially the low concentrations of in plume wells), the current sample frequency is not necessary. The team agreed that these wells should be sampled once per 5 years (Table 2). Although not required by the regulatory agencies, 5-PC will be sampled annually to establish temporal upgradient concentrations due to offsite sources.

Based upon the 6/26/02 telecon, it was determined that there is a need to monitor the condition of the PC more frequently than every 5 years in select wells. This is largely based on the importance of the PC aquifer as a regional aquifer. Two PC wells (2-PC and MS-53PC) will be sampled on a frequency of once every two years. The addition of these wells will allow the condition of the PC aquifer to be monitored on a more frequent basis and determination of trends will emerge faster than would be the case by sampling every five years. Specifically, MS-53PC will be sampled more frequently because it is located downgradient from the Navy. Similar to monitoring 5-PC, 2-PC will be sampled more frequently to track migration of offsite contamination onto the Navy property.

ACP Well Selection

General Factors Considered When Selecting ACP Wells

- Blow by across the NIROP compliance line into ACP
- Representation of contamination not captured by the capture system in ACP wells
- System complexity
- Using certain wells to monitor the concentrations along the compliance line and using these wells to determine capture performance.
- Trends: There is only one data set available. Significant changes have taken place in ACP. Therefore it will be difficult to eliminate wells from the monitoring program. At least 6 data points are commonly used to establish a temporal trend.
- Data will be useful in making future ACP remedy decisions.

Note: Water levels will be measured in all existing monitoring wells to be used to construct equipotential maps for AMR reports and for evaluation of remedial actions.

Capture system performance monitoring: All wells (18-S, 26-S, MS-36S, MS-41S, 4-IS, MS-36I, MS-41I, MS-45I, 15-D, 36-D, and MS-41D) inside the noted polygons (solid) in the shallow, intermediate, and deep intervals (Figures 1, 2, and 3, respectively) will be sampled annually. Those wells noted with an " * " will be sampled semi-annually (see Table 3 for more information).

ACP plume monitoring All wells inside the noted polygons (dashed) in the shallow, intermediate, and deep intervals (Figures 1, 2, and 3, respectively) will be sampled annually. Wells MS-44S and MS-44I will also be sampled semi-annually for ACP monitoring (in addition to those wells listed above for semi-annual sampling above; see Table 3 for more information).

Vegetable oil pilot scale test monitoring wells are not an issue here because we don't know degree of success for that project.

General Summary of Sampling Frequency

Semi-annual sampling will begin in the Spring of 2003. This was decided because the work plan and QAPP will not be able to be prepared and reviewed in time for Spring 2002 sampling.

This chart shows when wells (sampled annually or less frequently) would be sampled:

2001 (completed)	2002	2003*	2004	2005	2006	2007	2008*
5yr					5yr		
	2yr		2yr		2yr		

* Indicates five-year review

The 5 ppb contour line was examined. Based on numerous rounds of historical results, the upgradient concentrations values have not changed appreciably. Therefore, the sampling frequency for wells used to establish the 5 ppb contour line do not need to be sampled annually. Once every 2 years was selected as a reasonable frequency.

Summary of Sampling Frequencies (see Tables and Figures 1, 2, 3 for more info)

Well Class	Frequency
Veg oil wells (identified and sampled by CCI)	Quarterly
Wells noted " *" in the ACP	Semiannual
All wells not in the other categories	Annual
NIROP plume edge wells, and wells not needed to define 100 ppb isoconcentration contour for TCE	Biennial (occurring once every two years)
In-plume NIROP wells	Every 5 years
PC Wells	Every 5 years with noted exceptions

North 40 Concerns:
Three trenches with leaked barrels were discovered in the early 1980's NIROP site investigation. In the OU2 RI, investigators drilled through a barrel and an emergency removal was done which identified leaked barrels.
Two questions that have been raised are:

1. Where is contamination going and what is the ground water flow direction?
   Resolution: Modeling shows a more direct flow path to Mississippi River whereas hand drawn contours show a more southerly then westerly path to river. The gradient is flat in the N40 and one contour line generally is drawn through the area. Due to the flat gradients it is difficult to definitively identify the groundwater flow direction. Consensus was reached that we should rely on real measured hydraulic heads and professional interpretation of the data over modeling output. We might rethink the MS-42I data and construction to verify contours (rethink the monitored interval of this well).

2. Do we need to install additional 2 nests of wells initially included in the budget?
   Resolution - Action: Keith Henn provided additional lithology data and a N40 monitoring well review to the technical team by April 10, 2002. This was followed by a conference call on May 13 2002 at 11:00 am EST to initiate discussion on how to resolve the North 40 monitoring issue and also the intermediate zone monitoring gap issue. Attendees of this meeting were Henn, Kulthau, Davis, Thomas, and Betcher. Casey did not attend the call.

   Two topics were discussed [resolution included in () below]:
   a) Whether MS-42I is monitoring the Shallow or Intermediate Interval. (The technical team concluded that MS-42I monitors the shallow interval and not the intermediate interval. The team noted that by moving this well to the shallow interval there are no monitoring wells in the intermediate zone to monitor groundwater to the north of MS-43I and any groundwater downgradient from the N40 area).
   b) Information to assist in determining if additional wells are needed downgradient from the North 40 (The information was provided, however the need for wells was not resolved. The regulatory agencies will draft a proposal on the number of wells needed and the rationale from their point of view and submit this to the Navy for discussion. Likewise TtNUS will confer further with the Navy).

Groundwater Sampling Methods
Keith Henn presented the issues around the various sampling methods. First, it was asked if our sampling objective at this point in LTM is to (1) represent an exposure point concentration similar to drinking water use, or (2) whether the measured concentrations should measure relative concentrations and temporal trends to determine the effectiveness of the remedial system. Slides were used illustrating typical NIROP wells which show a lot of variability in earlier data but less variability in later data.

Discussion ensued about whether use PDBs would be allowed for sample collection. The Navy maintained that data variability may be due in part to the current sampling techniques employed while PDBs could remove much of this variability. The MPCA added that much of the variability in the field may had been removed by standardization of the purge and sample method and that the MPCA provided field

oversight to help to insure that a consistent method was being used. It was also identified that vertical stratification within a well can require characterization of each monitoring well before PDB placement for each well could be determined. The costs of this additional up front work have not been quantified nor has the time needed to do this work determined. It was determined that some wells were located near zones of higher contamination. The MPCA believes that PDBs would not be able to monitor these situations as well as purge and sample methods.

Craig was not comfortable with them, in part, because some studies show that they do not address stratification issues. EPA was also concern that the well screens may not be ideally positioned vertically to capture maximum concentrations of contaminants in the subsurface, but that extended purging helps to capture contamination that may lie slightly above or below the well screen. The use of PDBs would not allow for the creation of such an extended sampling zone from the currently installed wells. Two options were presented by TtNUS which could avoid the stratification issue yet measuring an "average" concentration using the PDB: (1) Use of multiple PDBs with averaging across PDBs or (2) use a longer PDB bag in one well. It was proposed that the site could be periodically "rebaselined" using conventional sample methods to verify PDB performance or to draw correlations between PDBs and purge and sample techniques. PDBs coupled with "rebaselining" would help us meet the objective of measuring exposure point concentrations *and* determine the trends in the system to measure remedy performance. It was stated that trying to use average concentrations by averaging multiple sample results or using long 10 foot bags defeated one advantage of the PDB method which is to determine concentrations from discreet intervals in short screened wells. TtNUS said that PDB can be used to monitor discrete intervals, but are not limited to this - so 'defeating' the 'advantage' is not really relevant.

MPCA stated they were inclined not to approve the use of PDBs because the up front work to characterize each well had not been done. In addition, numerous modifications have been made to the well monitoring and extraction well systems. The sampling methods have been standardized for purge and sample method so concentrations can be compared with past sampling information. The concern that changing sampling methods would add more confusion to data interpretation. Consensus was reached that PDBs would not be used.

All agreed that the next RAWP should specify conventional purge and sample method (same as used in 2001) as the selected sampling method. An option was left to further evaluate the use of PDBs in the future, especially in light of the apparent increased use of PDBs in other states.

Action: Cliff was to verify that Parsons actually prefers purge and sample for the Vegetable Oil Pilot Scale Test sampling.

Attachment 1. DQO Meeting Record, 2001

DQO Meeting Attendees:

		Meeting Dates						
Name	**Affiliation**	**3/21 - 3/24, C[3]**	**5/24, T**	**7/12, T**	**7/17-19, F**	**8/21, T**		
Joel Sanders	SOUTHDIV	X			X	X		
Thomas Bloom	USEPA	X			X[4]	X		
Hal Davis	USGS	X			X			
Keith Henn	TtNUS	X	X		X	X		
Mark Sladic	TtNUS	X	X		X	X		
Cliff Casey	SOUTHDIV	X			X			
B. Venky Venkatesh[1]	CH2MHILL	X	X		X	X		
Brian Lewis	TtNUS	X		X		X		
John Betcher[2]	MPCA	X			X	X		
David Douglas[2]	MPCA	X			X	X		
Rick kuhlthau[1]	Techlaw	X			X			
Tom Johnston	TtNUS	X	X	X	X	X		
Paul Rice	Galileo				X			
Todd Weidemeyer	Parsons		X					
Dan Griffiths	Parsons		X					
Mike Trojan	MPCA			X				

[1] Not present in the DQO meeting on Friday, March 23, 2001.

[2] Left the DQO meeting on Friday, March 23, 2001 after addressing their comments. The meeting lasted about half an hour beyond that point to address comments of other meeting participants.

[3] The first day of this meeting was a day of DQO training presented by John Warren and Tom Dixon of EPA headquarters.

[4] Arrived late on Tuesday.

C Charleston, SC
F Fridley, MN
T Teleconference

Attachment 2.

EVALUATION OF DIFFERENT METHODS FOR DETERMINING CAPTURE OF THE GROUND-WATER RECOVERY SYSTEM AT THE NIROP FACILITY, FRIDLEY, MINNESOTA

INTRODUCTION

This document discusses 9 different methods that could be used to estimate the capture zone of the ground-water recovery system. Each of the methods is list in the table below and then discussed individually. In reality, no one method may work best for all wells and the best result would be to use several methods in combination.

METHOD	PROBABILITY THAT METHOD WILL SUCCEED IN DETERMINING IF CAPTURE IS OR IS NOT OCCURRING.						
	AT9	AT8	AT7	AT3	AT10	AT5A	AT5B
Aquifer testing to determine Capture zone around wells	Good	Good	Good	Good	Good	Good	Good
Analytical equation	Poor	Fair	Fair	Fair	Poor	Good	Good
MODFLOW (if the model matches the heads and aquifer complexity within the vicinity of pumping wells)	Good	Good	Good	Good	Good	Good	Good
Otherwise	Fair/ Poor	Fair/ Poor	Fair/ Poor	Fair/ Poor	Fair/ Poor	Fair/ Poor	Fair/ Poor
Potentiometric maps and flowlines	Good/ Fair	Good/ Fair	Good/ Fair	Good/ Fair	Good/ Fair	Good	Good
Borehole flow meter	Fair/ Poor	Fair/ Poor	Fair/ Poor	Fair/ Poor	Fair/ Poor	Fair/ Poor	Fair/ Poor
Ground-water heat flow	Fair/ Poor	Fair/ Poor	Fair/ Poor	Fair/ Poor	Fair/ Poor	Fair/ Poor	Fair/ Poor
Tracer tests	Poor	Poor	Poor	Fair	Poor	Poor	Poor
Basic ground-water inorganic Chemistry	Fair/ Poor	Fair/ Poor	Fair/ Poor	Fair/ Poor	Fair/ Poor	Fair/ Poor	Fair/ Poor
Contaminant concentration Changes over time	Fair	Fair	Fair	Fair	Fair	Fair	Fair

DISCUSSION OF METHODS

Aquifer testing to determine capture zone around wells
This method was discussed in detail in the project proposal "Proposal for Determining the Capture Area of Recovery Wells at the NIROP Facility, Fridley, Minnesota", so it will not be discussed further here.

Analytical equation
Analytical equations such as those described by Grubb (1993), Javendel and Tsang (1986), and Todd (1976) can be used to determine the capture zone of a pumping well. These equations assume steady-state pumping and steady-state flow conditions in the aquifer, as well as uniform aquifer properties in the capture zone. Well AT5A is a very good candidate for this method, an aquifer test was conducted on the well and indicated that it fits the assumptions of the equation. Well AT5B should also be a good candidate because the aquifer has a definite upper boundary,

possible uniform permeability, and no nearby lateral boundaries. Wells AT9 and AT10 are probably the worst candidates for this method because of the immediate proximity of lateral low-permeability clay layers. The method may work satisfactorily for wells AT3, AT7, and AT8, the aquifer conditions do not fit the assumptions of the method perfectly, but are probably close enough to yield useful results.

MODFLOW

If the MODFLOW model closely matches the heads in the vicinity of the pumping wells, uses the known aquifer parameters from the aquifer tests and step-drawdown tests, and is able to accurately represent the distribution of clays around the pumping wells then the model should do a good job of predicting the capture zones.

Flownets

The flownet method could yield useful results because it is able to incorporate some aquifer complexity.

Borehole flow meter

This method has been discussed in considerable detail at the technical meetings and everyone probably has already formed an opinion on their accuracy. I have given all the wells a ranking of fair/poor based on the fact that some of the data already collected was contradictory.

Ground-water heat flow

All the wells were given a ranking of fair to poor because heat flow data is generally hard to interpret. However the data is already being collected and even a relatively simplistic interpretation may yield some useful results.

Tracer tests

All the wells, except AT3A, were given a ranking of poor. Based on the evaluation conducted in the planning of the "Proposal for Determining the Capture Area of Recovery Wells at the NIROP Facility, Fridley, Minnesota" it appears that there are few well-placed monitoring wells for tracer injection. In addition, any tracer tests would probably be long-term projects, which would add to difficulty of their execution.

Basic ground-water inorganic chemistry

Given the highly permeable sands and relatively fast flows the ground water would be expected to have relatively uniform chemical propertied which is why I ranked all the wells fair/poor. But this ranking is obviously speculative and this method may give results that are better than expected. If basic water quality data has been collected in the past it may show that the method has merit.

Contaminant concentration changes over time

In the long term the contamination levels in the down gradient wells should trend downward and this would be evidence that the recovery system is achieving significant capture. If the contamination levels in the down gradient wells remain high for an extended period of time then this would be evidence that significant amounts of contamination are not being captured.

However, it may take a significant amount time for this trend to develop even if the recovery system is achieving complete capture. Low permeability zones in the vicinity of and up gradient of the monitoring wells could be storing and later releasing contamination, thus causing the measured contamination levels to remain high for a significant period of time.

References

Todd, D.K., 1976, Groundwater Hydrology, John Wiley and Sons, 535 p.
Grubb, 1993, Analytical Model for Estimation of Steady State Capture Zones of Pumping Wells in Confined and Unconfined Aquifers, Ground Water, v 31, No. 1, p.27
Javendel and Tsang, 1986, Capture-zone type curves: A tool for aquifer cleanup, Ground Water, V. 24, No. 5, pp 616-625

Problem C. Groundwater Monitoring for Overall Contamination at NIROP

DQO Step 1. State the Problem

Concerns:

- NIROP groundwater contamination exceeds surface water and ground water ARARs and criterion to be considered (TBCs) as identified in the 5-yr review.
- Need to evaluate whether ROD remedy is protective of human health & environment
- Must obtain info to:
    - evaluate capture,
    - evaluate pilot study effectiveness
    - establish extent of contamination (horizontal and vertical)
    - evaluate integrity of compliance line at the river.
    - evaluate progress in aquifer restoration

Problem Statement : We want to optimize the groundwater monitoring program while providing sufficient data to determine whether the following are being achieved:

1. Contaminated groundwater is prevented from leaving the site
2. Contaminated groundwater is prevented from reaching the Mississippi River.
3. Change in the shape, size, and location, of plume are being tracked.
4. Contaminant levels are being evaluated relative to surface water and groundwater standards.
5. Performance of remedial system is assessed (System = Existing ongoing remedial actions and any future remedial actions which are implemented).
6. Practicability of achieving complete remediation is assessed (won't completely address this under groundwater optimization).

DQO Step 2. State the Decision

Overall Decision Statement: Determine whether endangerment of public heath and the environment, welfare through hydraulic control and recovery of all future migration of contaminated groundwater from NIROP & recovery to the extent feasible of downgradient contaminated groundwater has been prevented (paraphrased from the ROD).

Note: MPCA may be approached with a proposal for a variance if action levels are not achieved using the best available technology.

Note: Groundwater receptors considered at NIROP:

- Those that drink water from the aquifer beneath or downgradient of NIROP
- Those that drink water from the Minneapolis water supply
- Organisms living in the Miss. River.

Issue: There may be other ways to protect receptors.

Decision Statement

1. If contaminated groundwater (>100 ppb TCE) is migrating beyond the north and south edges of the capture well line along the NIROP compliance line, (see assumptions, Step 4, Problem B) ,evaluate potential system enhancements, source control, etc., as appropriate to improve the containment system. If not, optimize groundwater monitoring system by selecting different pumping rates,

deselecting wells from the list of monitoring/pumping, etc., as appropriate, based on best professional judgment using data analysis tools described in Attachment 2 (of Problem B: Effectiveness of Capture Well System).

Note: The "capture well line" (wells AT-3, 5A/B, 7, and 8) is located as close as physically possible to the "NIROP compliance line".

2. If groundwater with contaminants exceeding surface water criteria is entering the river, evaluate/implement a remedy to prevent this (This is related to Problem A: ACP Vegetable Oil VOC Reduction Pilot Study). If contaminated groundwater is not entering the river optimize groundwater monitoring program further.
3. If the change in shape, size, concentration, and location of plume indicate that the remedy is deficient or groundwater monitoring is insufficient, then make adjustments to mitigate the deficiency (action depends on conditions). If no change in shape, size, and location, of plume that would indicate that a deficiency is observed then optimize groundwater monitoring program further.
4. If groundwater COC concentrations are > their respective groundwater regulatory limits then continue the remedy, evaluate remedial alternatives (e.g., LUC, etc.), and/or petition for ACL. If not, recommend NFRAP and stop treatment.
5. If cleanup performance for the entire remedial system is unsatisfactory then enhance system performance, evaluate technical impracticability of the system, evaluate remedial alternatives (e.g., LUC, etc.), and/or petition for ACL. If the cleanup performance is satisfactory, further optimize the remedial system, if possible.
6. If achievement of cleanup goals is practicable then continue applying the remedy. If not then demonstrate technical impracticability of the cleanup goals and petition for an ACL.

Note: Item 6 above will only be evaluated when site conditions warrant such an evaluation (e.g.,. remedial system is reaching asymptotic performance levels that do not meet action levels).

Note: Include discussion of applicability of additivity assumption in the Minnesota HRL guidance at the end the remedy in the "Inputs to decision".

DQO Step 3. Inputs to the Decision

- SW-846 Method 8260 (as specified in approved QAPP) abbreviated list for groundwater samples (8 COCs shown below)

Analyte List

Analyte[1]	Frequency of Detection (all data to date)	Range of Detection (ug/L)	Location of Maximum Concentration (date and round in [ ])
1,1,1-Trichloroethane	202/1436	0.2 – 690	003-TW-033-01
1,1-Dichloroethane	418/1436	0.2 – 170	M05PC-[90_R11]
1,1-Dichloroethene	142/1436	0.2 – 380	003-TW-033-01
cis-1,2-dichloroethene	143/317	0.2 – 2440	18-S-[88_R01]
trans-1,2-dichloroethene	100/385	0.2 – 4700	18-S-[86_R04]
Tetrachloroethene	484/1436	0.2 – 560	PC-5-[99_R11]
Trichloroethene	1187/1436	0.4 – 140000	GW-01
Vinyl Chloride	32/1278	0.2 – 40	003-TW-P09-01

-
- MDLs to meet regulatory limits (e.g., Decision Statement #2, lower DL for VC in compliance wells)
- Well stabilization parameters (according to approved Remedial Action Workplan QAPP, Remedial Action Monitoring Plan)

- Surface water and groundwater quality standards (Attachment TBD)
- Mass removal calculations from extraction wells only (Decision Statement #5)
- Extraction well pumping rates and volumes (cumulative across all wells and individual wells, Decision Statements #1, 3, 4, 5 and 6)
- Water levels from monitoring wells (Decision Statements #1, 3, 4, 5 and 6))
- River gauge measurements (Decision Statements #1, 3, 4, 5 and 6)
- Cost of Operation and Maintenance for GWTF (Decision Statements #1, 4, 5 and 6)
- Potential remedial technology list (Decision Statement #4, 5 and 6)
- Feasibility study of alternatives (Decision Statement #4, 5 and 6)
- Technical impracticability guidance (Decision Statement #4, 5 and 6)

Note (Added by Keith Henn, evening of 7/19/01): Consensus: Because mass flux calculation results along the compliance line are no longer needed this calculation will no longer be performed and included in the AMR.

DQO Step 4. Define Site Boundaries

Spatial Boundaries

All Decision Statements:
- Primary Concern: Unconsolidated aquifer (shallow, intermediate, and deep monitored intervals).
- PDC was evaluated to assess potential downward migration.

Assumption: For purposes of general plume tracking, TCE is representative of the distribution of all contaminants (i.e., all 8 COCs).

Action Item: Partnering team to validate the above assumption by looking for coincidences of plume shape for all 8 COCs. Tag maps will be included in the 2001 AMR to achieve this objective. If assumption is not validated we will re-evaluate DQOs.

Decision Statement #1
- Zone of the NIROP plume that exhibits >100 ppb of TCE for contaminated groundwater beyond the north and south edges of the capture well line along the NIROP compliance line, see assumptions, Step 4, Problem B)

Decision Statement #2
- Zone of the NIROP plume that exhibits any of the 8 COCs > surface water regulatory limits along Mississippi River compliance line of NIROP plume.

Decision Statement #3
- Include PDC aquifer
- Mostly interested in plume edges of NIROP plume (see Problem B Effectiveness of Capture Well System, Step 4 Note).

Assumption: There are no spatial resolution requirements for establishing the location of the plume boundary.

Decision Statement #4
- Extent of TCE-contaminated ground water that is > regulatory limits for unconsolidated and PDC aquifers.

Assumption: TCE is representative of all 8 COCs for purposes of defining perimeter of the plume, however, in the interior of the plume all 8 COCs will be used.

Decision Statements #5 and #6

- Extent of all 8 [COC]s in NIROP plume > regulatory limits for unconsolidated and PDC aquifers.
- Also interested in interior of plume.

Temporal Boundaries

Note: Refer to Navy's Guide to Optimal Groundwater Monitoring, Table 4-2 for guidance.

General considerations:

- Temporal boundaries may be well-specific.
- Temporal boundaries may depend on how much data is available (how many rounds of data).

Duration of sampling program:

- Refer to Problem D: Exit Strategy
- Frequency of sampling (can be handled under Step 7). Includes consideration of:
  - Slope of the concentration trend line (approaching asymptote)
  - Sample data variability (i.e., noise)
  - Sampling program changes that are necessary because of containment or treatment system changes
  - Spatial density of sampling points relative to hydrogeologic complexity and proximity to source areas.

Decision Statement #1

- Refer to all general considerations. No other decision–specific temporal boundaries.

Decision Statement #2

- Duration of sampling program is such that we will monitor until we are able to achieve compliance with surface water criteria, including verification.

Decision Statements #3, 4, 5, and 6

- Refer to all general considerations. No other decision –specific temporal boundaries.

DQO Step 5. Decision Rules

1. If contaminated ground water (>100 ppb TCE) is migrating beyond the north and south edges of the capture well line along the NIROP compliance line, see assumptions, Step 4, Problem B) based upon the weight of evidence using water level data, TCE concentration trends, and capture zone analysis, then evaluate potential system enhancements, source control, etc., as appropriate.. If not, then optimize the system by selecting different pump rates, deselecting wells from the list of monitoring/pumping, etc., as appropriate based on best professional judgment using data analysis tool identified in Attachment 5. (this is related to Problem B: Effectiveness of Capture Well System).
2. Continue to study/implement a remedy (e.g., Vegetable Oil) until the ground water contaminant concentrations for each COC in all compliance wells are below their respective surface water criterion. (This is related to Problem A: ACP Vegetable Oil VOC Reduction Pilot Study). If contaminated ground water is not entering the river optimize ground water monitoring program further.

Action Item: Partnering Team will involve statisticians to assist the team in identifying how we are going to determine whether groundwater concentrations are below surface water criterion for Decision Rules #2 and 4. Not completed as of August 23, 2001, however progress has been made with EPA statistician (A. Lubin)

3. If the change in shape, size, concentration, and location of plume based upon the weight of evidence using water level data, TCE concentration trends, and capture zone analysis, indicates that the

remedy is deficient or groundwater monitoring is insufficient, then make adjustments to mitigate the deficiency (action depends on conditions). If no change in shape, size, and location, of plume that would indicate that a deficiency is observed, then optimize the ground water monitoring program further.

4. If ground water concentrations in the unconsolidated aquifer are > their respective ground water limits for any of the 8 COCs in any NIROP site well then continue the remedy, evaluate remedial alternatives (e.g., LUC, etc.), and/or petition for ACL. If not, recommend NFRAP and stop treatment.
5. If cleanup performance for the entire remedial system does not achieve cleanup goals within a reasonable timeframe after source reduction/removal/control, then enhance system performance, evaluate technical impracticability of the system, evaluate remedial alternatives (e.g., LUC, etc.), and/or petition for ACL. If the cleanup performance is satisfactory, further optimize the remedial system, if possible.
6. If achievement of cleanup goals is practicable then continue applying the remedy. If not then demonstrate technical impracticability of the cleanup goals and petition for an ACL.

Note: Decision Rule #6 will be evaluated per the technical impracticability guidance.

DQO Step 6. Establish Decision Error Tolerance Levels

Note: The Partnering Team has deferred this step to the statisticians. In this process the statisticians will review and use the Navy's Guide to Optimal Groundwater Monitoring as a guide and to address this problem.

DQO Step 7. Optimize the Design

Well Selection Meeting
(DQO Meeting #3)
NIROP Fridley
Charleston, SC
March 6 - 7, 2002

(Finalized per 6/26/02 tele-con)

Attendees

Jeff Meyers – Navy
Cliff Casey – Navy
John Betcher – MPCA (1, 2)
Rick Kuthau – EPA contractor (2)
Hal Davis –USGS
Venky Venkatesh -CH2MHill/CCI
Keith Henn – TtNUS (2)
Mark Sladic - TtNUS (2)
Tom Johnston - TtNUS
Paul Rice - ICLD
Craig Thomas - US EPA V (2)

Notes:
(3) J. Betcher has proxy to discuss any issue and make decisions for MPCA, because David Douglas could not attend the meeting.
(4) Participants in the 6/26/02 teleconference.

The purpose of this meeting was to select monitoring wells, sampling procedures, and other related items to complete NIROP Fridley data quality objectives (DQOs) Problem C. The results of this meeting will be the basis for the 2002 RAWP. The "previous DQO meetings" (including decision rules) noted in this document refer to meetings held on March 19-23, 2001 and July 17-19, 2001.

Tools were discussed to assist in the well selection process. Based upon discussion at the previous DQO meetings, geostats were introduced by the Navy as a tool. The EPA and MPCA raised questions about the validity of using geostatistics or other computerized means (e.g., MAROS software) of

evaluating the site data given the complexity of the geology and hydrogeology at the site. MPCA and EPA expressed concerns that the geostatistical evaluation of the monitoring network that was done in the past was no longer relevant. However, as identified in the meeting, the Navy was prepared to discuss an updated geostatistical evaluation of the site which included the numerous additions made to the monitoring network based upon the 1999 AMR data. MPCA and EPA asked that if the Navy intends to identify new information or tools in the meeting that it be sent out ahead of the meeting for review. The MPCA expressed the concern that the complexity of the site hydrogeology may violate some of the assumptions of geostatistics. For purposes of this meeting, it was agreed that only hand contouring (triangulation and no geostats) and professional judgement will be used to establish contaminant isoconcentration contours. The discussion did cover the use of geostatistics in the future, including the possibility of the team receiving training in geostatistics. However, this decision was postponed until later in the meeting. At the end of the meeting, it was determined by the group that since the team had been successful in identifying monitoring purposes and needs for individual wells, the use of geostatistics was not necessary and would not be pursued any further. The group decided that MAROS software will not be used.

Assumption: TCE concentrations are assumed to be the best indicator parameter of plume size, shape, and location at this time since the majority of VOC contamination in ground water is TCE. This will be tested in the 2001 Annual Monitoring Report (AMR). All eight COCs (which include TCE degradation products) identified in previous DQO meetings will be evaluated. Unless this evaluation shows that the assumption is not correct (e.g., if daughter products of TCE increase or are expected to increase based on remedy) TCE will be used as the indicator parameter for the NIROP plume for the AMR reports.

Assumption: In previous DQO meetings it was agreed that the 100 ppb TCE contour would be used to establish the capture zone performance, at least until site is near closure, at which time a more stringent criterion regarding the identification and bounding of contamination will apply. This assumption will be evaluated annually in the AMR (March, 2002).

Assumption: The well selection performed is based up 1999 AMR data and 2001 potentiometric surface contour maps. It was determined that this data is the most current agreed representation of the site conditions.

Assumption: Annual reviews of well selection will take place in each AMR. Modifications will be made based upon new or more complete data sets, as needed.

Assumption: It was noted in the 6/26/02 telecon that many wells have multiple monitoring purposes (as defined below). If a well is to be eliminated from the monitoring network in the future all of these purposes must be evaluated before it can be eliminated.

Development of a Decision Tree

The team discussed the types of information needed to achieve the project objectives. Later the team decided that, instead of dealing in the abstract, the team should actually go through a well selection process. Through this process the factors that are important would tabulated to develop a decision tree. An attempt was made to capture the thinking behind well selection and to establish how data would be used to support decision making for the 6 decision rules identified in previous DQO meetings. During the selection process the following general factors were identified with the understanding that particular circumstances could cause other factors to be important:

- Relative well concentrations (a desire to bias toward wells with higher concentrations wells)
- Upgradient concentrations
- Proximity of wells to each other (a concern over redundant data due to wells located close together)
- Bracketing important concentration contours with "clean" and "dirty" samples.
- Historical data, especially temporal and spatial trends
- Geology of the site (e.g., the influence of low permeability zones on contaminant movement)
- Representativeness of wells for various purposes (e.g., the capture system vs. plume edge)

- Data variability (e.g., site variability, sampling variability)
- NIROP versus non-NIROP contamination

Where appropriate, wells were classified as cross-gradient, upgradient, in-plume, etc (Tables 1 and 2). Some wells were selected based on inclusion in more than one classification and may therefore have multiple classifications. The text below ties the well selections to the 6 decision rules and provides rationale.

Decision Rule #C1 (Capture system performance):

Shallow Wells

These wells are listed in Table 1

Because MS-40S and MS-40I both monitor the shallow monitored interval, and MS-40S has historically had higher concentrations between the two wells, it was decided that MS-40S would adequately monitor the 100 ug/l contour and MS-40I would not need to be monitored.

Well data from UD-63S will come at the courtesy of UDLP. See Table 3 for this information.

Well 2-S was selected over 16-S as the better well to measure the 100 ppb TCE contour in this area. If future evidence (e.g., hydraulic data) does not validate this assumption, this can be reconsidered.

MPCA plans to have UDLP install wells downgradient of the paint shop where 12,000 ppb TCE was encountered.

The Navy will need copies of UDLP reports to understand if there is a possible influence of UDLP contamination on NIROP plume conditions. The data will be evaluated to determine if it will be useful to attempt to separate UDLP from NIROP-related contamination. See notes in Tables 1, 2, and 3 regarding NIROP wells which may represent UDLP contamination.

Action : Navy must request UDLP reports from UDLP (or the MPCA).

The Navy noted that based upon negotiations with UDLP, UDLP will perform O&M responsibilities at the NIROP for four years.

Action: Navy should elevate the resolution of separating UDLP and NIROP plumes through David Douglas of MPCA.

Intermediate Wells:
Wells are identified in Table 1.
There is no aquifer material in the intermediate interval to the south of AT-5A/B, thus there are no wells in this area.

The group determined, that there is a data gap in the intermediate zone north of MS-43I. North of this well no intermediate wells exist to determine the 100 ug/l and other lesser concentration contours. Contours in this area are inferred on AMR maps. A note of this monitoring data gap was made for latter discussion. This data gap will be discussed in a separate conference call. As noted in the summary of the 5/13/02 teleconference call this area and the appropriate amount of data needed to monitor this area is still being evaluated by the partnering team.

Deep wells

Wells are presented in Table 1.

Assumption: The group hasn't completely established the degree of data variability and trends in a select number of wells. The team will continue to track the information collected to better assess this.

Nevertheless, the characteristics are understood enough based upon the 1999 AMR data to select wells at this time.

Prairie du Chien Wells
These wells are discussed separately below.

Decision Rule C2 (Compliance Wells:)
Concentrations in these wells will be compared to surface water standards. Annual sampling should be conducted to provide enough data to establish trends and facilitate these comparisons. The wells are identified in Table 2.

Decision Rules C3 (Change in Plume Size, Shape, etc.) and C4 (Meet Cleanup Criteria)
Shallow Wells
Expectation: "Exterior" wells can be dropped from monitoring as the plume shrinks. No decision criteria were developed for how decisions would be made to drop monitoring wells.

The isoconcentration that will be used to bound the plume for this decision is 5 ppb. This was based upon assumption identified earlier (page 1) indicating that TCE is a sufficient indicator parameter. If this assumption proves to be invalid in each year's AMR then further evaluation will be needed. Other factors than simply TCE will need to be taken into account to make these decisions. The concentration of other compounds will need to be evaluated and the combined risk from multiple compounds will be part of the decision. It might be possible that criteria are exceeded for compounds other than TCE. The issue of verification of results and the number of sampling events required to verify that concentrations are below limits has not been discussed.

Based upon stable concentrations, upgradient wells have been given a low priority until final closeout of the site, at which time better definition of what contamination might be coming onto the site will become an important consideration. As a result, less frequent sampling can be used on these wells.

In-plume wells were selected for the shallow aquifer and are presented in Table 2.

Assumption: Since a capture system is in place monitoring source areas within the plume is less of a priority and can be monitored less frequently. Therefore it was agreed that the sampling frequency for in plume wells should be once per 5 years. The next sample round should be in 2006.

Discussion of ACP "in-plume" wells was deferred to later and are discussed in detail below.

Intermediate Wells
Wells were selected and are presented in Table 2.

Well 3-IS is a dual purpose well (in-plume well and plume edge to define the 100 ppb of TCE) is will be sampled annually.

A monitoring gap North of MS-43I was identified by the group in the intermediate zone. The monitoring gap results in uncertainty in location of the 100 ug/l and other concentration contours. The 100 ug/l contour is being used to evaluate system performance. This is being evaluated by the partnering team at the present time.

Deep Wells
Wells were selected and are presented in Table 2.

Based upon the 6/26/02 telecon, it was determined that well 4-D will be sampled every two years. The sole purpose of including this well is to define the 5 ppb line for TCE.

Sampling frequencies for MS-29D and MS-31D were not discussed in the mtg. Consistent with other in-plume wells a sampling frequency of 1/5 yr is recommended by TtNUS (see Table 3).

Prairie du Chien Wells
These wells are discussed separately below.

Decision Rules C5 (Enhance System Performance or Evaluate ACL's) and C6 (Technical Impracticability)
Well selection for this decision rule will be addressed in the ROD and 5 Year review process. If it is agreed by all parties that alternate concentration limits should be considered , the 5-year monitoring interval will not be frequent enough and will be addressed later.

Prairie du Chien Wells –Decision Rules C3, C4 and C6
TCE concentrations have ranged from non-detect to 7.9 ppb (5.5 ppb was incorrectly noted in the meeting) in wells monitored. PCE was detected at 560 ppb in well 5-PC (upgradient to NIROP).

Based on these results (especially the low concentrations of in plume wells), the current sample frequency is not necessary. The team agreed that these wells should be sampled once per 5 years (Table 2). Although not required by the regulatory agencies, 5-PC will be sampled annually to establish temporal upgradient concentrations due to offsite sources.

Based upon the 6/26/02 telecon, it was determined that there is a need to monitor the condition of the PC more frequently than every 5 years in select wells. This is largely based on the importance of the PC aquifer as a regional aquifer. Two PC wells (2-PC and MS-53PC) will be sampled on a frequency of once every two years. The addition of these wells will allow the condition of the PC aquifer to be monitored on a more frequent basis and determination of trends will emerge faster than would be the case by sampling every five years. Specifically, MS-53PC will be sampled more frequently because it is located downgradient from the Navy. Similar to monitoring 5-PC, 2-PC will be sampled more frequently to track migration of offsite contamination onto the Navy property.

ACP Well Selection
General Factors Considered When Selecting ACP Wells
- Blow by across the NIROP compliance line into ACP
- Representation of contamination not captured by the capture system in ACP wells
- System complexity
- Using certain wells to monitor the concentrations along the compliance line and using these wells to determine capture performance.
- Trends: There is only one data set available. Significant changes have taken place in ACP. Therefore it will be difficult to eliminate wells from the monitoring program. At least 6 data points are commonly used to establish a temporal trend.
- Data will be useful in making future ACP remedy decisions.

Note: Water levels will be measured in all existing monitoring wells to be used to construct equipotential maps for AMR reports and for evaluation of remedial actions.

Capture system performance monitoring: All wells (18-S, 26-S, MS-36S, MS-41S, 4-IS, MS-36I, MS-41I, MS-45I, 15-D, 36-D, and MS-41D) inside the noted polygons (solid) in the shallow, intermediate, and deep intervals (Figures 1, 2, and 3, respectively) will be sampled annually. Those wells noted with an " * " will be sampled semi-annually (see Table 3 for more information).

ACP plume monitoring All wells inside the noted polygons (dashed) in the shallow, intermediate, and deep intervals (Figures 1, 2, and 3, respectively) will be sampled annually. Wells MS-44S and MS-44I will also be sampled semi-annually for ACP monitoring (in addition to those wells listed above for semi-annual sampling above; see Table 3 for more information).

Vegetable oil pilot scale test monitoring wells are not an issue here because we don't know degree of success for that project.

General Summary of Sampling Frequency
Semi-annual sampling will begin in the Spring of 2003. This was decided because the work plan and QAPP will not be able to be prepared and reviewed in time for Spring 2002 sampling.

This chart shows when wells (sampled annually or less frequently) would be sampled:

2001 (completed)	2002	2003*	2004	2005	2006	2007	2008*
5yr					5yr		
	2yr		2yr		2yr		

* Indicates five-year review

The 5 ppb contour line was examined. Based on numerous rounds of historical results, the upgradient concentrations values have not changed appreciably. Therefore, the sampling frequency for wells used to establish the 5 ppb contour line do not need to be sampled annually. Once every 2 years was selected as a reasonable frequency.

Summary of Sampling Frequencies (see Tables and Figures 1, 2, 3 for more info)

Well Class	Frequency
Veg oil wells (identified and sampled by CCI)	Quarterly
Wells noted " *" in the ACP	Semiannual
All wells not in the other categories	Annual
NIROP plume edge wells, and wells not needed to define 100 ppb isoconcentration contour for TCE	Biennial (occurring once every two years)
In-plume NIROP wells	Every 5 years
PC Wells	Every 5 years with noted exceptions

North 40 Concerns:
Three trenches with leaked barrels were discovered in the early 1980's NIROP site investigation. In the OU2 RI, investigators drilled through a barrel and an emergency removal was done which identified leaked barrels.
Two questions that have been raised are:

1. Where is contamination going and what is the ground water flow direction?
   Resolution: Modeling shows a more direct flow path to Mississippi River whereas hand drawn contours show a more southerly then westerly path to river. The gradient is flat in the N40 and one contour line generally is drawn through the area. Due to the flat gradients it is difficult to definitively identify the groundwater flow direction. Consensus was reached that we should rely on real measured hydraulic heads and professional interpretation of the data over modeling output. We might rethink the MS-42I data and construction to verify contours (rethink the monitored interval of this well).

3. Do we need to install additional 2 nests of wells initially included in the budget?
   Resolution - Action: Keith Henn provided additional lithology data and a N40 monitoring well review to the technical team by April 10, 2002. This was followed by a conference call on May 13 2002 at 11:00 am EST to initiate discussion on how to resolve the North 40 monitoring issue and also the intermediate zone monitoring gap issue. Attendees of this meeting were Henn, Kulthau, Davis, Thomas, and Betcher. Casey did not attend the call.

   Two topics were discussed [resolution included in () below]:

c) Whether MS-42I is monitoring the Shallow or Intermediate Interval. (The technical team concluded that MS-42I monitors the shallow interval and not the intermediate interval. The team noted that by moving this well to the shallow interval there are no monitoring wells in the intermediate zone to monitor groundwater to the north of MS-43I and any groundwater downgradient from the N40 area).
d) Information to assist in determining if additional wells are needed downgradient from the North 40 (The information was provided, however the need for wells was not resolved. The regulatory agencies will draft a proposal on the number of wells needed and the rationale from their point of view and submit this to the Navy for discussion. Likewise TtNUS will confer further with the Navy).

Groundwater Sampling Methods
Keith Henn presented the issues around the various sampling methods. First, it was asked if our sampling objective at this point in LTM is to (1) represent an exposure point concentration similar to drinking water use, or (2) whether the measured concentrations should measure relative concentrations and temporal trends to determine the effectiveness of the remedial system. Slides were used illustrating typical NIROP wells which show a lot of variability in earlier data but less variability in later data.

Discussion ensued about whether use PDBs would be allowed for sample collection. The Navy maintained that data variability may be due in part to the current sampling techniques employed while PDBs could remove much of this variability. The MPCA added that much of the variability in the field may had been removed by standardization of the purge and sample method and that the MPCA provided field oversight to help to insure that a consistent method was being used. It was also identified that vertical stratification within a well can require characterization of each monitoring well before PDB placement for each well could be determined. The costs of this additional up front work have not been quantified nor has the time needed to do this work determined. It was determined that some wells were located near zones of higher contamination. The MPCA believes that PDBs would not be able to monitor these situations as well as purge and sample methods.

Craig was not comfortable with them, in part, because some studies show that they do not address stratification issues. EPA was also concern that the well screens may not be ideally positioned vertically to capture maximum concentrations of contaminants in the subsurface, but that extended purging helps to capture contamination that may lie slightly above or below the well screen. The use of PDBs would not allow for the creation of such an extended sampling zone from the currently installed wells. Two options were presented by TtNUS which could avoid the stratification issue yet measuring an "average" concentration using the PDB: (1) Use of multiple PDBs with averaging across PDBs or (2) use a longer PDB bag in one well. It was proposed that the site could be periodically "rebaselined" using conventional sample methods to verify PDB performance or to draw correlations between PDBs and purge and sample techniques. PDBs coupled with "rebaselining" would help us meet the objective of measuring exposure point concentrations *and* determine the trends in the system to measure remedy performance. It was stated that trying to use average concentrations by averaging multiple sample results or using long 10 foot bags defeated one advantage of the PDB method which is to determine concentrations from discreet intervals in short screened wells. TtNUS said that PDB can be used to monitor discrete intervals, but are not limited to this - so 'defeating' the 'advantage' is not really relevant.

MPCA stated they were inclined not to approve the use of PDBs because the up front work to characterize each well had not been done. In addition, numerous modifications have been made to the well monitoring and extraction well systems. The sampling methods have been standardized for purge and sample method so concentrations can be compared with past sampling information. The concern that changing sampling methods would add more confusion to data interpretation. Consensus was reached that PDBs would not be used.

All agreed that the next RAWP should specify conventional purge and sample method (same as used in 2001) as the selected sampling method. An option was left to further evaluate the use of PDBs in the future, especially in light of the apparent increased use of PDBs in other states.

Action: Cliff was to verify that Parsons actually prefers purge and sample for the Vegetable Oil Pilot Scale Test sampling.

Approved 8-21-01

TABLE 1
Problem C Decision Rule 1
SUMMARY OF MONITORING WELL TYPES[1] FOR GROUNDWATER MONITORING
DEFINED IN WELL SELECTION MEETING March 2002
NIROP FRIDLEY

	Wells Needed to Define Plume Edge (to define 100 ppb of TCE) (2, 4)						
NIROP Shallow Wells							
	2-S	USGS 2	MS-40S				
	5-S	USGS 5	MS-42I (3)				
	6-S	USGS 8	MS-43S				
	17-S	MS-34S	MS-52S(1)				
	19-S(1)	UD-63S(1,5)					
	7-S						
NIROP Intermediate Wells							
	3-IS	MS-45I					
	MS-29I	MS-46I					
	MS-41I						
	MS-43I						
	MS-44I						
NIROP Deep Wells							
	8-D	MS-36D	MS-43D				
	9-D	MS-40D	MS-44D				
	15-D	MS-41D	MS-47D				
	MS-35D						
NIROP Bedrock Wells							
	Not applicable						

Notes:
(1) The groundwater flow direction in the southern portion of the ACP indicates that the TCE detected in wells MS-52S, MS-52I, and MS-52D and perhaps wells 19-S, MS-51I, and 9-D may originate from the UDLP site. This has been noted in the 1999 AMR (TtNUS, 2000). This statement should be documented with all sample results from these wells in each AMR. MPCA, Navy, and UDLP will distinguish between contamination from NIROP and UDLP in the future.
(2) Based upon 1999 AMR analytical data.
(3) This well has been moved to the shallow zone per the tele-con on May 13, 2002.
(4) Many wells have multiple monitoring purposes. If a well is to be eliminated from the monitoring network in the future all of these purposes must be evaluated before it can be eliminated.
(5) Data from UD-63S will come at the courtesy of UDLP. This data may be collected at a different period (~within 6 or so months of AMR data). If data is not available then 20-S will be sampled in its place. If this is the case 20-S will represent the plume edge at this location (i.e., in place of UD-63S).

TABLE 2
Problem C Decision Rule 2, 3 4
SUMMARY OF MONITORING WELL TYPES(1,7) FOR GROUNDWATER MONITORING
DEFINED IN WELL SELECTION MEETING March 2002
NIROP FRIDLEY

Upgradient	Back-ground[1]	Cross-gradient	Plume Edge	In-Plume NIROP		Wells in the ACP (8)		Down-gradient	Point of Compliance	Sentinel[2]	Off-Base
NIROP Shallow Wells											
		16-S	MS-52S(3)	3-S(4)		USGS 5	MS-38S		USGS-5		
15-S		MS-52S(3)	5-S	8-S(4)		17-S	MS-39S		MS-43S		
21-S		USGS 8	7-S	9-S(4)		24-S	MS-40S		MS-44S		
23-S			16-S	MS-28S(4)		11-S	MS-41S		27-S		
			25-S	MS-29S(4)		MS-34S	18-S		MS-47S		
			USGS 5	MS-30S(4)		MS-35S	27-S		MS-49S		
			USGS 8	MS-31S(4)		MS-36S	MS-47S		19-S (3)		
			UD-63S(2,3)	MS-32S(4)		MS-37S	MS-49S				
				MS-33S(4)		MS-43S	26-S				
						MS-44S	14-IS				
						MS-45S	19-S (3)				
						MS-46S					
NIROP Intermediate Wells											
1-IS		10-IS	MS-43I	3-IS(4)		MS-34I	MS-41I		MS-43I		
2-IS			MS-52I(3)	5-IS(4)		MS-35I	MS-45I		MS-44I		
			(5)	MS-28I(4)		MS-36I	MS-46I		16-IS		
				MS-29I(4)		MS-43I	MS-47I		MS-47I		
				MS-30I(4)		MS-44I	MS-49I		MS-49I		
				MS-31I(4)		6-IS	MS-51I (3)		MS-51I (3)		
				MS-32I(4)		8-IS	4-IS				
				MS-33I(4)		12-IS	15-IS				
						13-IS	16-IS				
NIROP Deep Wells											
1-D		none available	2-D	12-D (4)	MS-29D (4)	MS-34D	6-D		MS-43D		
14-D			4-D	MS-28D (4)	MS-31D (4)	MS-35D	7-D		MS-44D		
				MS-30D (4)		MS-36D	8-D		16-D		
				MS-32D (4)		MS-41D	9-D (3)		MS-47D		
				MS-33D (4)		MS-43D	15-D		MS-49D		
						MS-44D	16-D		9-D (3)		
						MS-47D	17-D				
						MS-49D	MS-40D				
NIROP Bedrock Wells(6)											
1-PC (6)	4-PC (6)	MS-48PC (6)									
2-PC (6)	5-PC (6)	MS-50PC (6)									
3-PC (6)		MS-53PC (6)									
Fridley Well 13											

Notes:

(1) No background wells at the site due to offsite contamination migrating onto the Navy property.

(2) Data from UD-63S will come at the courtesy of UDLP. This data may be collected at a different period (~within 6 or so months of AMR data). If data is not available then 20-S will be sampled in its place. If this is the case 20-S will represent the plume edge at this location (i.e., in place of UD-63S).

(3) The groundwater flow direction in the southern portion of the ACP indicates that the TCE detected in wells MS-52S, MS-52I, and MS-52D and perhaps wells 19-S, MS-51I, and 9-D may originate from the UDLP site. This has been noted in the 1999 AMR (TtNUS, 2000). This statement should be documented with all sample results from these wells in each AMR. MPCA, Navy, and UDLP will distinguish between contamination from NIROP and UDLP in the future.

(4) These wells will be sampled once every 5 years beginning in 2001 (ie., the next sample round will be in 2006).

(5) Northwest of NIROP Plant building (western N40 area) monitoring is pending further discussion.

(6) The well types for this layer were not identified by the Parntering Team.

(7) Many wells have multiple monitoring purposes. If a well is to be eliminated from the monitoring network in the future all of these purposes must be evaluated before it can be eliminated.

(8) Refer to the well meeting notes and polygons noted by the partnering team on the attached Figures 1, 2, and 3.

TABLE 3
SUMMARY OF GROUNDWATER SAMPLING NETWORK[2,9]
DEFINED IN MARCH 2002 WELL SELECTION MEETING
NIROP FRIDLEY

	2001 (completed)		2002			2003[1]		2004		2005		2006		2007[2]	2008[1,2]
	semi-annual	annual	quarterly[3]	semi-annual	annual	semi-annual	annual	semi-annual	annual	semi-annual	annual	semi-annual	annual		
NIROP Shallow Wells															
1-S					X				X				X		
2-S					X				X				X		
3-S		X											X		
4-S															
5-S					X				X				X		
6-S					X		X		X		X		X		
7-S		X			X				X				X		
8-S		X											X		
9-S		X			X				X				X		
10-S															
11-S					X		X		X		X		X		
11-SB															
12-S															
13-S															
14-S															
14-IS		X			X		X		X		X		X		
15-S		X			X				X				X		
16-S		X											X		
17-S		X			X		X		X		X		X		
18-S		X				X		X		X		X			
19-S[7]		X			X		X		X		X		X		
20-S[4]		X			X		X		X		X		X		
21-S		X			X				X				X		
22-S															
23-S					X				X				X		
24-S		X			X		X		X		X		X		
25-S					X		X		X		X		X		
26-S		X				X		X		X		X			
27-S[3,6]		X	X				X		X		X		X		
MS-28S		X											X		
MS-29S													X		
MS-30S													X		
MS-31S		X											X		
MS-32S		X											X		
MS-33S		X											X		
MS-34S		X			X		X		X		X		X		
MS-35S		X			X		X		X		X		X		
MS-36S		X			X	X		X		X		X			
MS-37S		X			X		X		X		X		X		
MS-38S					X		X		X		X		X		
MS-39S					X		X		X		X		X		
MS-40S		X			X		X		X		X		X		
MS-40I															
MS-41S		X			X	X		X		X		X			
MS-43S		X			X		X		X		X		X		
MS-44S		X			X	X		X		X		X			
MS-45S[3,6]		X	X				X		X		X		X		
MS-46S		X			X		X		X		X		X		
MS-47S[3,6]		X	X				X		X		X		X		
MS-49S		X			X		X		X		X		X		
MS-52S[7]		X			X		X		X		X		X		
USGS 1															
USGS 2		X			X				X				X		
USGS 3															
USGS 4															
USGS 5		X			X		X		X		X		X		
USGS 6															
USGS 7															
USGS 8		X			X		X		X		X		X		
USGS 9															
AT-5A	X			X		X		X		X		X			
AT-7	X			X		X		X		X		X			
AT-8	X			X		X		X		X		X			
AT-9	X			X		X		X		X		X			
NIROP Intermediate Wells															
1-IS		X			X				X				X		
2-IS		X			X				X				X		
3-IS		X			X		X		X		X		X		
4-IS		X			X	X		X		X		X			
5-IS		X											X		
6-IS					X		X		X		X		X		
7-IS															
8-IS					X		X		X		X		X		

Wells selected for groundwater sampling will be determined based upon 2006 sample results.

TABLE 3
SUMMARY OF GROUNDWATER SAMPLING NETWORK[2,9]
DEFINED IN MARCH 2002 WELL SELECTION MEETING
NIROP FRIDLEY

	2001 (completed)		2002			2003[1]		2004		2005		2006		2007[2]	2008[1,2]
	semi-annual	annual	quarterly[3]	semi-annual	annual	semi-annual	annual	semi-annual	annual	semi-annual	annual	semi-annual	annual		
10-IS					X				X				X		
12-IS		X			X		X		X		X		X		
13-IS					X		X		X		X		X		
15-IS		X			X		X		X		X		X		
16-IS		X			X		X		X		X		X		
MS-28I		X											X		
MS-29I		X			X		X		X		X		X		
MS-30I		X											X		
MS-31I													X		
MS-32I		X											X		
MS-33I		X											X		
MS-34I					X		X		X		X		X		
MS-35I		X			X		X		X		X		X		
MS-36I		X			X	X		X		X		X			
MS-41I		X			X	X		X		X		X			
MS-42I[8]					X		X		X		X		X		
MS-43I		X			X		X		X		X		X		
MS-44I		X			X	X		X		X		X			
MS-45I		X			X	X		X		X		X			
MS-46I					X		X		X		X		X		
MS-47I		X			X		X		X		X		X		
MS-49I		X			X		X		X		X		X		
MS-51I[7]		X			X		X		X		X		X		
MS-52I[7]		X			X		X		X		X		X		
AT-3A	X			X		X		X		X		X			
AT-10	X			X		X		X		X		X			
NIROP Deep Wells															
1-D		X			X				X				X		
2-D					X				X				X		
3-D															
4-D					X				X				X		
5-D															
6-D		X			X		X		X		X		X		
7-D		X			X		X		X		X		X		
8-D		X			X		X		X		X		X		
9-D[7]		X			X		X		X		X		X		
10-D															
11-D															
12-D		X											X		
13-D															
14-D					X				X				X		
15-D		X			X	X		X		X		X			
16-D		X			X		X		X		X		X		
17-D		X			X		X		X		X		X		
MS-28D		X											X		
MS-29D													X		
MS-30D													X		
MS-31D													X		
MS-32D		X											X		
MS-33D		X											X		
MS-34D					X		X		X		X		X		
MS-35D		X			X		X		X		X		X		
MS-36D		X			X	X		X		X		X			
MS-40D		X			X		X		X		X		X		
MS-41D					X	X		X		X		X			
MS-43D					X		X		X		X		X		
MS-44D		X			X		X		X		X		X		
MS-47D		X			X		X		X		X		X		
MS-49D		X			X		X		X		X		X		
MS-52D[7]		X													
USGS 10															
AT-5B	X			X		X		X		X		X			
NIROP Bedrock Wells															
1-PC													X		
2-PC					X				X				X		
3-PC													X		
4-PC													X		
5-PC[5]		X			X		X		X		X		X		
MS-48PC		X											X		
MS-50PC													X		
MS-53PC		X			X				X				X		
Fridley Well 13	X				X				X				X		

Wells selected for groundwater sampling will be determined based upon 2006 sample results.

TABLE 3
SUMMARY OF GROUNDWATER SAMPLING NETWORK[2,9]
DEFINED IN MARCH 2002 WELL SELECTION MEETING
NIROP FRIDLEY

	2001 (completed)		2002			2003[1]		2004		2005		2006		2007[2]	2008[1,2]
	semi-annual	annual	quarterly[3]	semi-annual	annual	semi-annual	annual	semi-annual	annual	semi-annual	annual	semi-annual	annual		
NIROP ACP Oil Injection Wells[8]															
PES-CW-1			X												
PES-CW-2			X												
PES-CW-3			X												
PES-MW-1			X												
PES-MW-2			X												
PES-MW-3			X												
PES-MW-4			X												
PES-MW-5			X												
PES-MW-6			X												
PES-MW-7			X												
PES-MW-8			X												
PES-MW-9			X												
PES-INJ-1			X												
PES-INJ-2			X												
PES-INJ-3			X												
PES-BG-1			X												
BG-2			X												
BG-3			X												
UNITED DEFENSE LP WELLS															
UD63-S[4]					X				X				X		

Notes:
1. Five year Review Report
2. LTM will be evaluated each year in the Annual Monitoring Report. Plan for 2007 and 2008 will be determined based upon 2006 data.
3. Quarterly sampling will be performed by CCI for the Veg. Oil Treatability Study at a frequency of 0, 2, 5, 8, 12 months plus any contingency sample rounds. Sampling began in December 2001.
4. Data from UD-63S will come at the courtesy of UDLP. This data may be collected at a different period (~within 6 or so months of AMR data). If data is not available then 20-S will be sampled in its place. If this is the case 20-S will represent the plume edge at this location (i.e., in place of UD-63S).
5. Navy is sampling on an annual basis to determine the contaminant migration coming from an upgradient source. This decision is not being dictated by the regulatory agencies or partnering team.
6. Samping performed by CCI for the Veg. Oil Treatability Study will be done in place of AMR samping. However, this data will be reported in the AMR.
7. The groundwater flow direction in the southern portion of the ACP indicates that the TCE detected in wells MS-52S, MS-52I, and MS-52D and perhaps wells 19-S, MS-51I, and 9-D may originate from the UDLP site. This has been noted in the 1999 AMR (TtNUS, 2000). This statement should be documented with all sample results from these wells in each AMR. MPCA, Navy, and UDLP will distinguish between contamination from NIROP and UDLP in the future.
8. This well has been moved to the shallow zone per the tele-con on May 13, 2002.
9. Many wells have multiple monitoring purposes. If a well is to be eliminated from the monitoring network in the future all of these purposes must be evaluated before it can be eliminated.

APPENDIX C

MPCA RISK BASED SITE CHARACTERIZATION AND SAMPLING GUIDANCE

Superfund and Voluntary Investigation and Cleanup Programs
Minnesota Pollution Control Agency

Sampling Standard Operating Procedure at the Naval Industrial Reserve Ordnance Plant Remedial Action Work Plan

Rev. 0; Dated 10/02

TABLE OF CONTENTS

1.0 INTRODUCTION **4**

2.0 ADVANCE PREPARATION FOR SAMPLING **4**
2.1 Selection Of Analytical Parameters 4
2.2 Detection Limits 4
2.3 Quality Assurance For Field Procedures 4
2.4 Sampling Containers And Preservatives 5
2.5 Purging And Sampling Equipment 5
2.6 Decontamination, Storage And Transport Of Equipment 5
2.7 Selection Of Sample Collection Techniques 6
2.8 Order of Sampling 6

3.0 PRELIMINARY FIELD WORK **6**
3.1 Field Inspections And Field Decisions 6
3.2 Detection Of Immiscible Layers 6
3.3 Water-Level Measurements 7
3.4 Field Water-Quality Measurements 7
3.5 Purging And Stabilization 8

4.0 SAMPLE COLLECTION **9**
4.1 Pump Setting 9
4.2 Sample Filtration 9
4.3 Filling Sample Containers 9
4.4 Field Blanks and Replicates 10
Field Blank Samples 10
Field Replicate Samples 11
Field Split Samples 11

5.0 DOCUMENTATION OF SAMPLING EVENT **11**
5.1 Sample Identification 11
5.2 Chain Of Custody 12
Field Chain of Custody Documentation 12
Chain of Custody During Shipping and Transfer of Samples 12
5.3 Field Sampling Log 13
5.4 Exceptions To Sampling Protocol 13
5.5 Field Conditions 13

6.0 SAMPLE PRESERVATION, HANDLING AND TRANSPORT **13**
6.1 Sample Preservation 13
6.2 Sample Handling And Transport 13

LIST OF TABLES

Table 1: Sample Containers, Filling Method, Preservation and Holding Times 14

LIST OF FIGURES

Figure 1: Location of Sampling Points 15

LIST OF APPENDICES

APPENDIX A: SELECTED ANALYTICAL PARAMETERS, METHOD NUMBERS AND REPORTING LIMITS 16

REFERENCES

Ref. 1: Remedial Action Work Plan at the Naval Industrial Reserve Ordnance Plant (NIROP), Fridley, Minnesota, October 2002 and any updates thereto, prepared by Tetra Tech NUS, Inc.

Superfund and Voluntary Investigation and Cleanup Programs

Sampling Standard Operating Procedure at the Naval Industrial Reserve Ordnance Plant REMEDIAL ACTION WORK PLAN

1.0 INTRODUCTION

This document outlines procedures to be used for ground water quality measurements and for collecting and handling ground water samples obtained from monitoring wells at the Naval Industrial Reserve Ordnance Plant (NIROP), Fridley, Minnesota during the remedial action. Deviations from these procedures may be required by unforeseen circumstances that develop during the sampling event(s). Such deviations will be approved by the lead technical staff or the field crew leader as described below. When regulatory or lead technical staff approvals cannot be obtained in advance, deviations from the established procedures will be evaluated as soon as possible after sampling and the need for re-sampling will be evaluated. Deviations from the specified procedures will be clearly noted on the sampling information form (SIF) used for the sampling of each well and will be included in the Remedial Action Report.

This document will be used in conjunction with the *Remedial Action Work Plan, Naval Industrial Reserve Ordnance Plant (NIROP), Fridley, Minnesota, October 2002* and any updates thereto, prepared by Tetra Tech NUS, Inc. (Ref. 1).

2.0 ADVANCE PREPARATION FOR SAMPLING

Selection of analytical parameters, laboratory arrangements, the order of sampling wells, field measurement and sampling techniques, equipment selection and other quality assurance measures are based on the sampling objectives presented in the main body of the Work Plan.

2.1 Selection of Analytical Parameters

Samples will be collected for analysis of the parameters shown in Table 4-6 and Table 5-2 of Ref. 1 to fulfill requirements of the MPCA Superfund and/or Voluntary Investigation and Cleanup (VIC) programs. Samples will be collected from the wells listed in Table 4-3 of Ref. 1. A summary of the groundwater sampling network is provided in Table 4-5 of Ref. 1.

Analytical techniques for organic compounds were selected primarily on the basis of ability to detect potential contaminants at low levels.

2.2 Detection Limits

Practical quantitation limits are listed in Table 4-6 and Table 5-2 of Ref. 1.

2.3 Quality Assurance for Field Procedures

Particular care will be exercised to avoid the following common ways in which cross contamination or background contamination may compromise ground water samples:

- improper storage or transportation of equipment
- contaminating the equipment or sample bottles on site by setting them on or near or downwind of potential contamination sources such as uncovered ground, a contaminated vehicle, or vehicle or generator exhaust
- handling bottles or equipment with dirty hands or gloves

- inadequate cleaning of well purging or sampling devices

Field methods quality assurance verification procedures are described below in Section 4.4, "Field Blanks, Replicates and Split Samples". Field personnel should work under the assumption that contamination exists in land surface, soil and vegetation near sampling points, wash water, etc. Therefore, exposure to these media will be minimized by taking at least the following precautions:

- minimizing the amount of rinse water left on washed materials
- minimizing the time sampling containers are exposed to airborne dust or volatile contaminants in ambient air
- placing equipment on clean, ground-covering materials instead of on the land surface

Clean gloves made of appropriately inert material will be worn by all field crew. Gloves will be kept clean while handling sampling-related materials. The gloves will be replaced by a new pair between each sampling site.

2.4 Sampling Containers and Preservatives

Laboratory-supplied sampling containers and preservatives to be used for samples from all wells are shown in Table 4-7 and Table 5-3 of Ref. 1. The Laboratory Quality Assurance Project Plan (Lab-QAPP) (Appendix A of Ref. 1, Volume II) includes specific procedures for the following: sample container cleaning, testing, labeling and storage; preparation and addition of preservatives. Preservatives for volatile organic samples are added to the sample container in the field. Chemical preservatives for all other parameters are added in the laboratory before samples are collected.

2.5 Purging and Sampling Equipment

Well purging and sampling equipment includes the following:

- decontaminated submersible pumps and/or bladder pumps
- decontaminated pump discharge lines
- other equipment such as rope, gloves, generators, air compressors (with air/oil filter), etc.

2.6 Decontamination, Storage and Transport of Equipment

Decontaminated pump tubing will be used each time each well is sampled. Between sampling events, the tubing will be stored in a sealed, chemically inert plastic bag. Pump bladders will be decontaminated by circulating decontamination fluids through the pump as described below.

All sampling-related equipment including filtration devices, personal protection gear and materials coming into contact with actual sampling equipment or with sampling personnel will be decontaminated. Decontamination will be performed before and after working at each sampling point, at a decontamination station in the field or at each individual sampling point in the field. All equipment will be handled in a manner that will minimize cross-contamination between wells and avoid introducing surface contamination or ambient air contamination into a well.

Before mobilizing for field work or performing any decontamination, a source of "control" water and organic-free deionized water for decontamination will be selected and evaluated. The evaluation process will include sufficient laboratory analysis to assess the suitability of the proposed water. The proposed decontamination water will only be used for decontamination if analyses indicate it is appropriate for the complete set of target parameters. In the event that use of a desorbing agent is necessary, the desorbing agent will be reagent grade isopropyl alcohol. Equipment will be decontaminated in the following manner:

A. Equipment that does not contact sample water or the inside of the well:

- clean (inside and out) with an Alconox/clean-water solution - applied with a scrub brush where practical
- rinse with clean "control" water
- inspect for remaining particles or surface film and repeat cleaning and rinse procedures if necessary

B. Equipment that contacts sample water or the inside of the well:

- clean (inside and out where possible) with an Alconox/clean-water solution - applied with a scrub brush made of inert materials
- rinse with potable water
- rinse with isopropyl alcohol
- rinse with organic-free deionized water
- inspect for remaining particles or surface film and repeat cleaning and rinse procedures if necessary
- shake off remaining water and allow to air dry

The internal surfaces of pumps and tubing that cannot be adequately cleaned by the above methods alone will also be cleaned by circulating decontamination fluids through them. The fluids will be circulated through this equipment in the order shown above under "B".

Wastewater from well purging and equipment cleaning will be containerized on-site until analytical results are obtained to determine proper disposal. Disposable personal protective and sampling equipment will be containerized on-site and staged inside NIROP building for disposal at a sanitary landfill after characterization.

When transporting or storing equipment after cleaning, the equipment will be protected in a manner that minimizes the potential for contamination. The tubing will be placed in a clean, inert plastic bag or wrapped in aluminum foil.

2.7 Selection of Sample Collection Techniques

Sample collection techniques outlined in this document have been tailored to the goals of this sampling event and the individual characteristics of this site. A summary of the sampling goals and the pertinent site, well and contaminant characteristics is given in the Work Plan.

2.8 Order of Sampling

The ground water monitoring wells will be purged and sampled in the following order: contingency wells, monitoring wells (starting from the most downgradient well), injection wells, and background well to minimize cross contamination.

3.0 PRELIMINARY FIELD WORK

3.1 Field Inspections and Field Decisions

Before purging or sampling, all wells should be inspected to verify that:
- all sampling points are safely accessible;
- all wells are in satisfactory condition;
- current water levels indicate a gradient consistent with the preliminary order of well sampling;
- the existing health and safety plan procedures are appropriate for actual site conditions;
- well depth and that the annular seal is intact at the surface.

Any unusual conditions including the presence of wind-blown dust or odor in the ambient air should be recorded on the SIF.

3.2 Detection of Immiscible Layers

Air inside a well suspected of significant contamination will be tested immediately with an organic vapor-detecting device such as PID or FID. The measurement will be recorded on the SIF. If immiscible layers of contaminants (free product "floaters" or "sinkers") are suspected or if odors or an oil sheen are observed, procedures will be followed to characterize the distribution of contaminants in the water-yielding zone adjacent to the well screen. Because free product can accumulate anywhere from the top to the bottom of the water column, the normal sequence of purging and sampling will be preceded by a free-product evaluation step to allow for the best characterization of contamination. An attempt to measure the thickness of any free product will be made using the following equipment:

electric water-level probe or oil/water interface probe. General procedures for detection and sample collection of immiscible layers will be in accordance with guidance provided in U.S. EPA RCRA Ground-Water Monitoring: Draft Technical Guidance, November 1992, Section 7.2.3. Specific detailed procedures actually used in response to site/well conditions will be recorded on the SIF and included in the Remedial Action Report. The presence of and characteristics of any detected immiscible layers will be noted on the SIF.

A bailer will be used to collect any pre-purging samples from the water table surface and a thief sampler will be used to collect any pre-purging discrete-interval samples from below the top of the water column. In addition to any discrete-interval samples collected, an additional sample will be collected from near the middle of the water column after normal purging. Analytical needs for these three samples will be reviewed with the Superfund Program technical representative to determine which analyses are required for each sample. Visual screening or sequential analysis of samples may eliminate the need to analyze all samples collected in some circumstances.

3.3 Water-Level Measurements

Prior to any well evacuation or sampling, initial static water levels will be measured and recorded for all wells. This is done to facilitate selection of the proper pump intake depths for purging and sampling and calculation of the ground water flow direction.

During initial static water level measurement, a minimum of two water level measurements will be made at each well. The two water level measurements will be made in rapid succession. If there is poor agreement between the first and second static water level measurements (i.e., a difference of more than 0.01 feet), data will be re-evaluated for measurement errors, unsuspected pumping that may be causing transient changes in gradient, etc. If the discrepancy cannot be rectified, a third static water level measurement will be made at each questionable sampling point to assess the true water level, verify non-steady state conditions, etc.

The sampling crew will make water-level measurements at all appropriate monitoring wells and piezometers within the shortest time interval practical to provide comparable numbers by which to calculate the ground water gradient. A time limit exceeding 8 hours will be considered a reportable protocol exception for this sampling event. An additional water level measurement will be taken immediately after sampling to evaluate potential cascading problems. These water levels will be entered on the SIF.

Water levels will be measured with an electric water-level probe. The depth-to-water should be referenced to the measuring point marked at the top of the innermost well casing. Where a measuring point has not been marked at the top of the casing, the measuring point will be assumed to be at the top of the innermost casing on the north side of the casing. When reporting absolute water level elevation, this measurement will be converted to water level elevation (MSL) from the surveyed elevation of the top of well casing. Water level measurement data will be recorded on the SIF.

3.4 Field Water-Quality Measurements

Specific conductance, pH, temperature, and turbidity will be measured in the field immediately before sample collection. All measurements will be recorded on the SIF. Purging and stabilization information will also be noted on the SIF.

All measurements except for turbidity will be taken within a closed flow cell device designed to allow measurement of these parameters while minimizing changes in temperature, pressure, and dissolved gases from the in-situ aquifer environment. The flow cell has the following characteristics:

- Air tight fittings for installation of all probes.
- Intake is connected directly to the pump discharge line.
- Resides in a water bath kept at a temperature close to the in-situ ground water temperature.
- A discharge line of sufficient length that is connected to the flow cell with an airtight connection.
- A maximum volume of no greater than five times the per minute volumetric rate of inflow to the cell to maintain measurement sensitivity to temporal changes in water quality.
- A minimum volume of 350 mL to provide enough thermal mass to minimize external temperature effects.

- The flow cell will be shielded from strong winds and on hot days it will be shielded from direct sunlight.

The operation of the probes will be as follows:

1. The flow of extracted ground water through the flow cell will be maintained as continuous and steady as practical throughout the measurement period.
2. Discharge rates through the flow cell are kept low enough to prevent streaming potential problems with probes.
3. All probes will be fully immersed without touching the sides of the airtight, non-metallic flow cell.
4. All probes will be allowed to equilibrate with fresh well water for a minimum of five minutes before recording measurements.

Specific procedural details for measurement of individual field water quality parameters are outlined in the manufacturer's instruction/owner's manual. General care, maintenance, calibration procedures, and operation of each measurement device will also follow manufacturer's specifications as detailed in the instruction/owner's manual for each device.

3.5 Purging and Stabilization

Before a well is sampled for the dissolved phase, it will be purged as described above to ensure that samples contain fresh formation water. While the well is being purged, water quality parameters described above in Section 3.4, "Field Water-Quality Measurements", and the quantity of water purged will be recorded on the SIF.

A purging rate that will minimize drawdown while allowing the well to be purged in a reasonable length of time will be used and recorded on SIF. Care will be taken to avoid any significant amount of cascading or turbulence in the well.

Wells with extremely slow recharge rates due to tight formation materials will require alternate purging and sampling methods. If normal purging is clearly impractical, the well will be pumped to near dryness and allowed to partially recover for a maximum of one hour. Sampling will then commence as soon as possible after evacuation.

Wells that do not have extremely slow recharge rates will be purged and sampled as described below. Purging will be conducted in a manner that, to the extent practical, removes all the "old" water in the well so it is replaced by fresh ground water from outside the well installation. Wells will be purged at a maximum purge rate not to exceed the draw down of more than two (2) feet.

1. The well will be purged by placing the pump just below the water table. (NOTE: It is possible that for some shallow wells that the water level will be within the screen. If this is the case, the same procedure for purging and sampling can be used although in some cases the pump will have to be within the screened interval due to necessity.)
2. Repeated vertical adjustment of the purging equipment intake will be avoided if possible, but may be necessary as the water level drops.
3. Decontaminated submersible pumps and/or bladder pumps will be used for purging and sampling.
4. Sampling will immediately follow purging and stabilization.

Field water quality parameters will be measured for stabilization after each water-column volume is purged. The following target criteria for three consecutive measurements (one water-column volume apart) will be used to demonstrate stabilization:

- pH +/- 0.1 units
- temperature +/- 0.1 degrees Celsius
- specific conductance (temperature corrected EC) +/- 5%
- turbidity: less than or equal to 10 NTU

Samples for laboratory analysis will be collected only after a minimum of 3 water-column volumes have been purged and stabilization of field water-quality parameters has been demonstrated by meeting the target criteria defined in the

preceding paragraph. If field parameters do not stabilize after approximately five water-column volumes, then field staff will check operator procedures, equipment functioning and well construction information for potential problems. In particular, field staff will re-evaluate whether or not water is being withdrawn from the appropriate depth to effectively evacuate the well.

If all the checks produce no new insight, a decision might be made to collect samples after five or more water-column volumes have been purged even if field measurements have not stabilized. Before authorizing the laboratory to analyze samples, the meaningfulness and value of completing laboratory analysis of the sampling suite will be evaluated by reviewing the results of field measurements, well construction data, site hydrogeology, etc. Where such data is presented, it will be clearly documented that stabilization was not achieved; at a minimum, this fact will be reported on the SIF and in the Remedial Action Report.

As with water from well development, purge water will be properly stored, tested, and disposed of in accordance with all applicable rules including Minnesota Rule 7060. Fifty-five gallon drums will be located at each of the wells to collect water removed from the wells during development and sampling. No significant amount of well water will be emptied or discharged onto the ground surface unless analytical data are available and indicate that the water is not contaminated. After water analyses become available, and appropriate disposal alternatives are evaluated, the water will be disposed of in an environmentally safe manner that does not conflict with any applicable rules.

4.0 SAMPLE COLLECTION

This section describes procedures for setting the sampling pump and collecting ground water samples. Field data for these items will be recorded on the SIF for each sampling point.

4.1 Pump Setting

A bladder pump will be used as the default device for sample collection. If well recovery is so slow that a satisfactory water column height (for normal pump operation) is not reached in a reasonable amount of time, a Teflon® bailer will be used for sample collection. The SIF will show what type of device was used to sample each well. If any device other than the one described above is used, it should be reported as a protocol exception.

In very slowly recharging wells, the pump intake will be set approximately two feet from the bottom of the well to minimize aeration problems. Alternately, in wells where the entire screen length is saturated, the pump intake will be set in the middle of the screened interval.

The groundwater sampling pump will not be removed between well purging and groundwater sampling. Pumping will be continuous and sampling will immediately follow purging. If pumping is not continuous it will be noted on the SIF. The sample collection pumping rate will be less than or equal to the purging rate. The sampling rate will be between 100 and 250 mL/minute.

4.2 Sample Filtration

Sample filtration is not anticipated for this project. If filtration is required, MPCA and USEPA approval will be obtained prior to sampling.

4.3 Filling Sample Containers

Table 1 summarizes the sample container type, filling method, preservation method and holding time for each analytical parameter set. Individually prepared bottles will not be opened until they are to be filled with water samples.

1. A clean and dry sheet of relatively inert plastic shall be placed on the ground surface in the wellhead area. If materials used in the sampling process must be put down, they will be placed on a clean portion of the plastic sheet instead of the ground surface.
2. A clean pair of nitrile or latex gloves will be put on at the onset of sampling activities at each new sampling point.

3. Sampling personnel will keep their hands as clean as practical and replace gloves if they become soiled while performing sampling activities.

Bottles will be labeled and chain-of-custody sections will be filled out by the field personnel according to procedures described below in Section 5: "Documentation of Sampling Event". To prevent a mix up with sample bottle identification, no sampling-point specific information such as "well name" will be filled out in advance of sampling. Chain of custody information will be completed before leaving the sampling point. Laboratory-prepared bottles will be used to assure quality control.

The order of filling bottles with water to be analyzed will be as follows:

1. volatile organic compounds
2. methane, ethene, ethane
3. sample volume for mobile lab analyses
4. nitrate and nitrite
5. total organic carbon
6. bromide

This order will be reversed in very slowly recharging wells and will be noted on the SIF. Replicate samples will be collected sequentially as described in Section 4.4: "Field Blanks, Replicates and Split Samples". Methods for filling sample containers for individual analyses are described in Table 1.

The sample water discharge point at the end of the tube will be held as close as possible to the sample container without allowing the sample tubing to contact the container. At a minimum, sampling personnel will use their body to shield the sampling container from wind and airborne dust while filling. When strong winds, heavy rain, or dusty conditions are present, additional measures will be implemented to guard against background interference.

4.4 Field Blanks and Replicates

Sample blanks will be collected to detect background or method contamination. Replicate samples will be collected to evaluate variability in analytical methods. QA/QC samples will be collected at sampling points suspected to have relatively higher levels of contamination to provide meaningful information for blank or duplicate sample evaluation. Field duplicate samples will be assigned identification aliases on the sample bottle label and on the chain of custody sheet to avoid alerting laboratories that the sample is a replicate sample. The true identity of the field duplicate samples will be recorded in the field sampling log.

The collection schedule for QA/QC samples will be as follows:

1. one trip blank (composed of three replicate vials) for each cooler of VOC samples
2. one field methods (equipment) blank each day by each field sampling crew
3. at least one replicate set for every 10 samples collected

Field ambient air blanks will not be required for this project because the project site is a community park and no VOCs will be emitted from an operating facility during sampling. Also, no automobile engines will run during the sampling event. If the pumps use a gas-driven generator, the generator will be located downwind from the sampling point.

For each type of QA/QC sample, containers will be prepared and submitted for the analyses listed in Table 4-7 and Table 5-3 of Ref. 1.

Field Blank Samples

Methods that will be used for preparing field blank samples are described below.

Trip blanks for VOCs consist of a set of three pre-filled 40 mL purge and trap vials that will be filled and sealed by the primary VOC analytical laboratory with laboratory-controlled organic-free water. The 40 mL, purge and trap,

blank sample vials will travel with the actual sample vials to and from the field in the cooler, to the well head, etc., so that the blanks are exposed to precisely the same conditions as the actual samples. The bottle blanks will not be opened until they are analyzed in the laboratory along with the actual VOC samples they have accompanied.

Field equipment/methods blanks will be collected in the field for target parameters. Sample containers used for each blank will be the same as for the actual analysis of sample water for these parameter groups. All containers shall be pre-cleaned within the laboratory's QA/QC program in the same manner as primary sample bottles. The sample blank containers will be filled in the field. Laboratory-controlled organic-free water will be used to fill all organic blank samples. Trace metal blanks will be filled with laboratory-prepared, triply distilled water. The same preservatives will be added to both the methods blank and the primary samples.

Collection of field equipment/methods blank samples will be conducted to simulate actual field sampling methods in a manner that would detect the presence of background or cross-contamination of samples from the ambient environment, preservatives or sampling equipment. An effort will be made to have the blank sample water contact all the interfaces and preservatives (where applicable) that the sample water will contact. These may include the sampling mechanism, ambient air, sample container and, when applicable, tubing, filtration membranes and preservatives.

Laboratory-supplied blank water will be pumped through a freshly decontaminated reusable sampling device and directly into the appropriate, laboratory provided, sample containers. Blanks for filtered samples (only if filtered samples are collected) will be collected by passing the blank sample water through the filtration device and the same type of filters used for collecting the primary samples.

Field Replicate Samples

Field replicate samples of actual ground water will be collected for the following parameters listed in Table 4-6 and Table 5-2 of Ref. 1. One field replicate sample set will be collected for every ten primary sampling sets. The replicate samples will be collected by sequentially filling all containers as close together in time as practical with a sampling stream that is as steady and continuous as practical. The sequence number (first, second, etc.) and time of sample filling will be listed in the field notebook. The time that each individual container was filled will be listed on the container and on the Sample Identification - field chain of Custody Record (SI-FCCR) in the same manner as primary samples. All samples will be sent to the laboratory specified in the QAPP of Ref. 1.

Field Split Samples

Field split samples are not anticipated for this project. If split samples are collected in the future, MPCA and USEPA approval of the other laboratory QAPP will be obtained prior to sampling.

5.0 DOCUMENTATION OF SAMPLING EVENT

This sampling protocol template includes the use of forms shown in Appendix D of Ref. 1 (Volume I); they are designed for documentation of field activities and collection of field data. They also provide a means to verify whether or not this protocol was followed during a number of key steps in the ground water sampling event. The forms include the following:

1. Sampling Information Form
2. Purging and Stabilization Form
3. Identification - Field Chain of Custody Record (SI-FCCR)

5.1 Sample Identification

The Sample Identification - Field Chain of Custody Record (SI-FCCR) in Appendix D of Ref. 1 (Volume I) will be completed as described above in Section 5.0, "Documentation of Sampling Event".

The SI-FCCR will be at least a two-part (carbonless copy) form.

Each sample container will be labeled with the following information:

- unique container ID #
- sample collection Date and Time
- initials of person collecting sample
- analyses required
- preservation method

Container information will be entered at the sampling point at the time of sample collection. However, for containers receiving preservatives in advance, "analyses required" and "preservation method" will be entered onto labels by laboratory staff. For containers receiving preservatives in the field, "preservation method" will be entered at the time individual containers are filled.

5.2 Chain Of Custody

A chain-of-custody record (SI-FCCR) will be initiated in the field at the time of sampling; a copy will accompany each set of samples (cooler) shipped to any laboratory.

Each time responsibility for custody of the samples changes, the new and previous custodians will sign the record and denote the date and time. A copy of the signed record will be made by the receiving laboratory. The final signed SI-FCCR will be submitted with analytical results in the Remedial Action Report.

Field Chain of Custody Documentation

All signatures related to sample custody will be made in indelible ink on the SI-FCCR in a timely fashion. One or more signatures will be entered to identify the person or persons who are collecting the samples. Each time the custody of a sample or group of samples is transferred, a signature, date and time will be entered to document the transfer. The signatures, date and time will be entered at the time of transfer. A sample will be considered to be in custody if it is in any one of the following states:

1. in actual physical possession
2. in view, after being in physical possession
3. in physical possession and locked up so that no one can tamper with it
4. in a secured area, restricted to authorized personnel

A secured area such as a locked storage shed or locked vehicle specified in the "comments" column may be used for temporary storage. When using such an area, the time, date, and location of the secured area will be recorded in the "relinquished by" space. The time at which an individual regains custody will then be recorded in the "received by" space.

Chain of Custody During Shipping and Transfer of Samples

When samples are shipped, the person sealing the shipping container will enter the time, date and their signature on the SI-FCCR. The laboratory part of the SI-FCCR will be enclosed in the container; the top page (first part) will be retained for the project manager's file. A post office receipt, bill of lading, or similar document from the shipper will be retained as part of the permanent chain-of-custody documentation.

One or more custody seals will be affixed over the opening of the shipping container in a manner that precludes opening the container without breaking the seal(s). The container seal(s) will be inscribed with the signature of the person sealing the container and the date and time sealed.

The receiving laboratory will be notified in advance of chain-of-custody procedures that must be followed for a group of samples. The laboratory will be instructed to note whether or not the container seal(s) are intact and sign in the appropriate blank on the SI-FCCR at the time of receipt. They will also be instructed to keep a copy and return the original form to their client's quality assurance officer.

5.3 Field Sampling Log

A daily field log of sampling activities will be kept by the leader of the field sampling crew. At a minimum, the log will contain a record of the following items:

- list of field personnel present
- field conditions (see Section 5.5)
- description of exceptions to this protocol including specification of which samples may have been impacted by exception(s)
- For each well sampled:
  1) Well Name and unique SI-FCCR # used to identify samples,
  2) equipment used for evacuation and stabilization,
  3) date and time that purging and sampling began and ended,
  4) a list of all samples sent to each laboratory

5.4 Exceptions to Sampling Protocol

This protocol defines the procedures to be followed during this sampling event. Exceptions to this protocol will be noted on the SIF.

If there has been any potentially significant impact on sample integrity, then the potential impact for each parameter for each sample affected will be footnoted whenever the results are reported or referred to in the Remedial Action Report.

5.5 Field Conditions

Field conditions during the sampling event will be recorded on the SIF. The Remedial Action Report will include a statement regarding the likelihood that any unusual field conditions had a significant impact on the integrity of results. Field conditions reported will include but not be limited to the following:

- air temperature
- wind speed/direction
- precipitation/moisture at the time of the sampling event, and if known, previous days' precipitation
- ambient odors
- airborne dust

6.0 SAMPLE PRESERVATION, HANDLING AND TRANSPORT

6.1 Sample Preservation

Samples will be preserved as shown in Table 1. All chemical preservatives added to containers in the laboratory or field will be produced and controlled within the laboratory's QA/QC program as reflected in the Lab-QAPP (Appendix A of Ref. 1, Volume II). Field supplies of preservatives and sample containers with pre-dosed preservatives will be discarded and replaced with fresh preservatives no later than 14 days after receipt from the laboratory.

All samples will be thermally preserved in the field immediately after sample collection by placing the samples in an insulated ice chest containing ice. The ice chest temperature will be checked by measuring the temperature of the water within the temperature blank container and recorded upon receipt at the laboratory, to verify whether or not samples are kept refrigerated at approximately 4 degrees C.

6.2 Sample Handling and Transport

All ice chests shipped will be accompanied by a SI-FCCR form and contain a complete destination and return address on the outside of the cooler. The samples will be kept at approximately 4 degrees C during transport to laboratories. Maintain the chain-of-custody according to procedures described in Section 5.2.

Table 1: Sample Containers, Filling Method, Preservation and Holding Times

Sample Containers, Filling Method, Preservation and Holding Times are provided in Table 4-7 and Table 5-3 of Ref. 1.

Figure 1: Location of Sampling Points

For Location of wells to be sampled under this project refer to Figure 4-1 in Ref. 1

APPENDIX A: SELECTED ANALYTICAL PARAMETERS, METHOD NUMBERS AND REPORTING LIMITS

Analytical Parameters, Method Numbers, and Practical Quantitation Limits are listed in Table 4-6 and Table 5-2 of Ref. 1.

APPENDIX D

FIELD FORMS

Tetra Tech NUS, Inc.

EQUIPMENT CALIBRATION LOG

PROJECT NAME : _____

INSTRUMENT NAME/MODEL: _____

SITE NAME: _____

MANUFACTURER: _____

PROJECT No.: _____

SERIAL NUMBER: _____

Date of Calibration	Instrument I.D. Number	Person Performing Calibration	Instrument Settings		Instrument Readings		Calibration Standard (Lot No.)	Remarks and Comments
			Pre-calibration	Post-calibration	Pre-calibration	Post-calibration		

Tetra Tech NUS, Inc.

GROUNDWATER LEVEL MEASUREMENT SHEET

Project Name: _____ **Project No.:** _____

Location: _____ **Personnel:** _____

Weather Conditions: _____ **Measuring Device:** _____

Tidally Influenced: Yes ____ No ____ **Remarks:** _____

Well or Piezometer Number	Date	Time	Elevation of Reference Point (feet)*	Total Well Depth (feet)*	Water Level Indicator Reading (feet)*	Thickness of Free Product (feet)*	Groundwater Elevation (feet)*	Comments

* All measurements to the nearest 0.01 foot

Tetra Tech NUS, Inc.

GROUNDWATER SAMPLE LOG SHEET

Page___ of ___

Project Site Name: _____
Project No.: _____

[] Domestic Well Data
[] Monitoring Well Data
[] Other Well Type: _____
[] QA Sample Type: _____

Sample ID No.: _____
Sample Location: _____
Sampled By: _____
C.O.C. No.: _____
Type of Sample:
[] Low Concentration
[] High Concentration

SAMPLING DATA:

Date:	Color	pH	S.C.	Temp.	Turbidity	DO	Salinity	Other
Time:	(Visual)	(S.U.)	(mS/cm)	(^{0}C)	(NTU)	(mg/l)	(%)	
Method:								

PURGE DATA:

Date:	Volume	pH	S.C.	Temp.	Turbidity	DO	Salinity	Other
Method:								
Monitor Reading (ppm):								
Well Casing Diameter & Material								
Type:								
Total Well Depth (TD):								
Static Water Level (WL):								
One Casing Volume(gal/L):								
Start Purge (hrs):								
End Purge (hrs):								
Total Purge Time (min):								
Total Vol. Purged (gal/L):								

SAMPLE COLLECTION INFORMATION:

Analysis	Preservative	Container Requirements	Collected

OBSERVATIONS / NOTES:

Circle if Applicable:

MS/MSD	Duplicate ID No.:

Signature(s):

Tetra Tech NUS, Inc.

PUMPING TEST DATA SHEET

PROJECT NAME: _____ PUMPING WELL NUMBER: _____

PROJECT NUMBER: _____ MEASURED WELL NUMBER: _____

[ ] PUMPING TEST [ ] STEP DRAW DOWN TEST

DATE(s): MONITORING POINT:

MEASUREMENT METHOD: DEPTH CORRECTION (ft):

TEST NUMBER: PUMP SETTING (Ft. below monitoring point):

STATIC WATER LEVEL (ft): DISTANCE FROM PUMPING WELL (ft):

PERSONNEL:

REMARKS:

MILITARY TIME	ELAPSED TIME SINCE PUMP START OR STOP (Min.)	WATER LEVEL (Ft.)	CORRECTION (Ft.)	DRAW DOWN OR RECOVERY (Ft.)	PUMPING RATE (GPM)	FLOW METER READING (Gals.)	REMARKS

NOTE: All measurements to nearest 0.01 foot measured from top of well riser pipe unless otherwise noted.

TETRA TECH NUS, INC.

CHAIN OF CUSTODY

NUMBER 0804

PAGE ____ OF ____

PROJECT NO:	FACILITY:	PROJECT MANAGER	PHONE NUMBER	LABORATORY NAME AND CONTACT:
SAMPLERS (SIGNATURE)		FIELD OPERATIONS LEADER	PHONE NUMBER	ADDRESS
		CARRIER/WAYBILL NUMBER		CITY, STATE

STANDARD TAT ☐
RUSH TAT ☐
☐ 24 hr. ☐ 48 hr. ☐ 72 hr. ☐ 7 day ☐ 14 day

CONTAINER TYPE PLASTIC (P) or GLASS (G)

PRESERVATIVE USED

TYPE OF ANALYSIS

DATE YEAR	TIME	SAMPLE ID	LOCATION ID	TOP DEPTH (FT)	BOTTOM DEPTH (FT)	MATRIX (GW, SO, SW, SD, QC, ETC.)	COLLECTION METHOD GRAP (G) COMP (C)	No. OF CONTAINERS									COMMENTS

1. RELINQUISHED BY	DATE	TIME	1. RECEIVED BY	DATE	TIME
2. RELINQUISHED BY	DATE	TIME	2. RECEIVED BY	DATE	TIME
3. RELINQUISHED BY	DATE	TIME	3. RECEIVED BY	DATE	TIME

COMMENTS

DISTRIBUTION: WHITE (ACCOMPANIES SAMPLE) YELLOW (FIELD COPY) PINK (FILE COPY)

4/02R
FORM NO. TtNUS-001

Remedial Action Work Plan

Volume II
Quality Assurance Project Plan
for
Field Activities

Naval Industrial Reserve Ordnance Plant
Fridley, Minnesota

Southern Division
Naval Facilities Engineering Command
Contract Number N62467-94-D-0888

Contract Task Order 0057

January 2003

REVISION 4
JAUARY 2003.

REMEDIAL ACTION WORK PLAN - VOLUME II

QUALITY ASSURANCE PROJECT PLAN
FOR
FIELD ACTIVITIES

NAVAL INDUSTRIAL RESERVE ORDNANCE PLANT
FRIDLEY, MINNESOTA

COMPREHENSIVE LONG-TERM
ENVIRONMENTAL ACTION NAVY (CLEAN) CONTRACT

Submitted to:
Southern Division
Naval Facilities Engineering Command
2155 Eagle Drive
North Charleston, South Carolina 29406

Submitted by:
Tetra Tech NUS, Inc.
661 Andersen Drive
Foster Plaza 7
Pittsburgh, Pennsylvania 15220

CONTRACT NUMBER N62467-94-D-0888
CONTRACT TASK ORDER 0057

JAUARY 2003

Date 2/24/03
PROJECT MANAGER
TETRA TECH NUS, INC.

Date 2-25-03
QUALITY ASSURANCE REVIEWER
TETRA TECH NUS, INC.

Date 2/25/03
PROJECT MANAGER
BAY WEST

Date 2/24/03
LABORATORY DIRECTOR
EN CHEM

Date
REMEDIAL PROJECT MANAGER
U.S. EPA REGION 5

Date
QUALITY ASSURANCE REVIEWER
U.S. EPA REGION 5

Date 2/25/03
PROJECT MANAGER
DEPARTMENT OF THE NAVY

NIROP FRIDLEY RAWP DISTRIBUTION

NAME	ADDRESS	NO. COPIES
Jeff Meyers	Commander Southern Division Naval Facilities Engineering Command Attn: Jeff Meyers, Code ES32 P.O. Box 190010 North Charleston, SC 29419-9010	2
David Douglas	Minnesota Pollution Control Agency Division of Ground Water and Solid Waste 520 Lafayette Road St. Paul, MN 55155-4194	2
Gary Schafer	U.S. Environmental Protection Agency, Region 5 77 West Jackson Boulevard Chicago, IL 60604-3590	2
Paul Walz	Manager - O&M Site Contractor Bay West Inc. 5 Empire Drive Saint Paul, MN 55103-1867	2
Tim Ruda	Sr. Environmental Control Technician United Defense LP Armament Systems Division 4800 East River Road Minneapolis, MN 55421	1
Hal Davis	U.S. Geological Survey Water Resources Division 227 N. Bronough Street Suite 3015 Tallahassee, FL 32301	1
Venky Venkatesh	CH2M Hill 990 North Point Tower 1001 Lakeside Avenue Cleveland, OH 44114	1
John Koehnen	Tech Law (EPA Contractor) 105 West Madison Suite 900 Chicago, IL 60602	3
Mark Sladic	Tetra Tech NUS, Inc. Foster Plaza 7 661 Andersen Drive Pittsburgh, PA 15220	2

USEPA QAPP WORKSHEET #1

Site Name/Project Name: Remedial Action Work Plan
Site Location: Naval Industrial Reserve Ordnance Plant, Fridley, Minnesota
Site Number/Code: NA
Operable Unit: NA

Contractor Name: Tetra Tech NUS, Inc. (TtNUS)
Contract Task Order Number: 0057
Contract Title: Navy Comprehensive Long-Term Environmental Action Navy (CLEAN) Program

1. **Identify Guidance used to prepare QAPP:**

   Region 5 USEPA *– Instructions of the Preparation of a Superfund Division Quality Assurance Project Plan, June 2000, Revision 0.*

2. **Identify USEPA Program:** *Comprehensive Environmental Response, Compensation, and Liability Act (CERCLA)*

3. **Identify approval entity: USEPA or State:** *USEPA*

   or other entity:

4. **Indicate whether the QAPP is a generic program QAPP or a project specific QAPP:** *Project Specific*

5. **List dates scoping meetings were held:** *Telephone conferences and email scoping discussions were held between the Navy and EPA on several occasions resulting in the 2001 Annual Monitoring Report Work Plan. This Quality Assurance Project Plan updates and otherwise revises the 2001 Annual Monitoring Report Work Plan.*

6. **List dates and titles of QAPP documents written for previous site work, if applicable:**

   June 1997 Quality Assurance Project Plan for Operable Unit 3
   September 2001 Work Plan for In-Situ Bioremediation
   October 2001 Annual Monitoring Report Work Plan

7. **List organizational partners (stakeholders) and connection with USEPA and/or State:**
   MPCA, NIROP RAB

8. **List data users:** *The Navy will use the data to prepare the groundwater Annual Monitoring Report for NIROP Fridley. The USEPA, MPCA, and RAB will review the documents prepared.*

9. **If any required QAPP Elements (1-20), Worksheets and/or Required Information are not applicable to the project, then circle the omitted QAPP Elements, Worksheets, and Required Information on the attached Table. Provide an explanation for their exclusion below:**

   The information needed for the worksheets was directly filled into the tables of relevant QAPP sections; therefore, except for this work sheet (Worksheet No. 1), worksheets are not included in the QAPP.

USEPA QAPP Worksheet #1 (Continued)

REQUIRED USEPA REGION 5 ELEMENT	TITLE	REQUIRED INFORMATION	QAPP SECTION
		Project Management	
A1	Title and Approval Sheet	- Title - Organization's name - Dated signature of Project Manager - Dated signature of Quality Assurance Officer - Other signatures, as needed	Title Page
A2	Table of Contents		Table of Contents
A3	Distribution List		Letter of Transmittal
A4	Project/Task Organization	- Identify key individuals with their responsibilities	A4
A5	Problem Definition/Background	- Clearly state problem to be resolved - Provide historical and background information	A5
A6	Project/Task Description	- List measurements to be taken - Cite quality standards, criteria, or objectives - Note special personnel or equipment requirements - Provide work schedule - Note project and QA records/reports	A6
A7	Quality Objectives and Criteria for Measurement Data	- State project objectives and limits, qualitatively and quantitatively - State and characterize measurement quality objectives	A7
A8	Training Requirements	- State how training is provided, documented, and assured	A8
A9	Documentation and Records	- List information and records to be included in data report - State requested lab turnaround time - Give retention time and location for records and reports	A9
		Data Generation and Acquisition	
B1	Sampling Process Design	- Type and number of samples required - Sampling design and rationale - Sampling location and frequency - Sample matrices - Classification of each parameter	B1
B2	Sampling Methods Requirements	- Identify sample collection procedures and methods - List equipment needs - Identify support facilities - Identify individuals responsible for corrective action - Describe process for preparation and decontamination of sampling equipment - Describe selection and preparation of sample containers and sample volumes - Describe preservation methods and maximum holding times	B2, RAMP Section 4.0
B3	Sample Handling and Custody Requirements	- Note chain-of-custody procedures	B3
B4	Analytical Method Requirements	- Identify analytical methods to be followed and required equipment - Provide validation information for nonstandard methods - Identify individuals responsible for corrective action - Specify needed laboratory turnaround time	B4

USEPA QAPP Worksheet #1 (Continued)

REQUIRED USEPA REGION 5 ELEMENT	TITLE	REQUIRED INFORMATION	QAPP SECTION
Data Generation and Acquisition (Continued)			
B5	Quality Control Requirements	- Identify QC procedures and frequency for each sampling, analysis, or measurement technique and associated acceptance criteria and corrective action - Reference procedures used to calculate QC statistics including precision and bias/accuracy	B5
B6	Instrument/Equipment Testing, Inspection, and Maintenance Requirements	- Identify acceptance testing of sampling and measurement systems - Describe equipment preventive and corrective maintenance - Note availability and location of spare parts	B6
B7	Instrument Calibration and Frequency	- Identify equipment needing calibration and frequency for such calibration - Note required calibration standards and/or equipment - Cite calibration records and manner traceable to equipment	B7
B8	Inspection Acceptance Requirements for Supplies and Consumables	- State acceptance criteria for supplies and consumables - Note responsible individuals	B6
B9	Data Acquisition Requirements for Nondirect Measurements	- Identify type of data needed from nonmeasurement sources (e.g., computer database and literature files, along with acceptable criteria for their use) - Describe previous collection of data and its relevance to this project	A5
B10	Data Management	- Describe standard record-keeping and data storage and retrieval requirements - Checklists or standard forms attached to QAPP - Describe data handling equipment and procedures used to process, compile, and analyze data	B8
Assessment/Oversight			
C1	Assessment and Response Action	- List required number, frequency, and type of assessments, with approximate dates and names of responsible personnel - Identify individuals responsible for corrective actions	C1
C2	Reports to Management	- Identify frequency and distribution of reports for project status, results or performance evaluation samples, any significant QA problems, and preparers and recipients of reports	C2
Data Validation and Usability			
D1	Data Review, Validation, and Verification Methods	- State criteria for accepting, rejecting, or qualifying data - Include project-specific calculations	D1
D2	Validation and Verification Methods	- Describe process for data validation and verification - Identify issue resolution procedure and responsible individuals - Identify method for conveying theses results to data users	D2
D3	Reconciliation with User Requirements	- Describe process for reconciling project results with DQOs and reporting limitations on use of data	D3

TABLE OF CONTENTS

SECTION **PAGE NO.**

USEPA QAPP WORKSHEET #1 iii

ACRONYMS xii

GROUP A PROJECT MANAGEMENT

A4 PROJECT ORGANIZATION A4-1
A4.1 MANAGEMENT A4-1
A4.1.1 USEPA Remedial Project Manager A4-1
A4.1.2 Minnesota Pollution Control Agency Project Manager A4-1
A4.1.3 Navy Project Manager A4-3
A4.1.4 Contractor Project Management A4-3
A4.2 QUALITY ASSURANCE A4-5
A4.2.1 USEPA Region 5 Quality Assurance Coordinator A4-6
A4.2.2 Navy Quality Assurance Manager A4-6
A4.2.3 TtNUS Quality Assurance Manager A4-6
A4.2.4 TtNUS Project Quality Assurance Advisor A4-7
A4.2.5 TtNUS Data Validation Manager A4-7
A4.2.6 Laboratory Responsibilities A4-7
A4.3 FIELD INVESTIGATION A4-9
A4.3.1 Field Operations Leader A4-10
A4.3.2 Site Quality Assurance/Quality Control Advisor A4-11
A4.3.3 Site Safety Officer A4-11
A4.3.4 Field Technical Staff A4-11

A5 PROBLEM DEFINITION / BACKGROUND INFORMATION A5-1
A5.1 FACILITY HISTORY A5-1
A5.1.1 General History A5-1
A5.1.2 Past Data Collection Activities A5-1
A5.2 FACILITY DESCRIPTION A5-1
A5.3 PROJECT STATUS A5-1
A5.4 QUALITY ASSURANCE PROJECT PLAN PREPARATION GUIDELINES A5-2
A5.5 OVERALL PROJECT OBJECTIVES A5-2
A5.6 PROJECT OBJECTIVES A5-2
A5.7 DATA QUALITY OBJECTIVES A5-3

A6 PROJECT DESCRIPTION AND SCHEDULE A6-1
A6.1 INTRODUCTION A6-1
A6.2 PROJECT TARGET PARAMETERS AND INTENDED DATA USES A6-1
A6.2.1 Field Parameters A6-1
A6.2.2 Laboratory Parameters A6-3
A6.3 DATA VALIDATION A6-3
A6.4 SAMPLE NETWORK DESIGN AND RATIONALE A6-3
A6.5 PROJECT SCHEDULE A6-3

TABLE OF CONTENTS (Continued)

SECTION **PAGE NO.**

A7 QUALITY OBJECTIVES AND CRITERIA FOR MEASUREMENT DATA A7-1
A7.1 PRECISION A7-1
A7.1.1 Definition A7-1
A7.1.2 Field Precision Objectives A7-5
A7.1.3 Laboratory Precision Objectives A7-5
A7.2 ACCURACY A7-6
A7.2.1 Definition A7-6
A7.2.2 Field Accuracy Objectives A7-6
A7.2.3 Laboratory Accuracy Objectives A7-7
A7.3 COMPLETENESS A7-7
A7.3.1 Definition A7-7
A7.3.2 Field Completeness Objectives A7-7
A7.3.3 Laboratory Completeness Objectives A7-8
A7.4 REPRESENTATIVENESS A7-8
A7.4.1 Definition A7-8
A7.4.2 Measures to Ensure Representativeness of Field Data A7-8
A7.4.3 Measures to Ensure Representativeness of Laboratory Data A7-8
A7.5 COMPARABILITY A7-9
A7.5.1 Definition A7-9
A7.5.2 Measures to Ensure Comparability of Field Data A7-9
A7.5.3 Measures to Ensure Comparability of Laboratory Data A7-9
A7.6 LEVEL OF QUALITY CONTROL EFFORT A7-9

A8 SPECIAL TRAINING REQUIREMENTS A8-1
A8.1 FIELD PERSONNEL A8-1
A8.2 LABORATORY PERSONNEL A8-1

A9 DOCUMENTATION AND RECORDS A9-1
A9.1 DOCUMENTATION, RECORDS, AND DATA MANAGEMENT A9-1
A9.1.1 Project Documentation and Records A9-1
A9.1.2 Field Analysis Data Package Deliverables A9-1
A9.1.3 Fixed Laboratory Data Package Deliverables A9-1
A9.1.4 Data Reporting Formats A9-3
A9.1.5 Retention Time A9-3

GROUP B DATA GENERATION AND ACQUISITION

B1 SAMPLING PROCESS DESIGN B1-1
B1.1 SAMPLING DESIGN AND RATIONALE B1-1
B1.2 FIELD MOBILIZATION / DEMOBILIZATION B1-1
B1.3 SAMPLE COLLECTION B1-2
B1.4 SAMPLE IDENTIFICATION SYSTEM B1-2
B1.5 SAMPLE HANDLING, PRESERVATION, AND SHIPPING B1-2
B1.6 SAMPLE CUSTODY B1-3
B1.7 QUALITY CONTROL SAMPLES B1-3
B1.8 SURVEYING B1-4
B1.9 INVESTIGATION DERIVED WASTE B1-4
B1.10 RECORD KEEPING B1-5

TABLE OF CONTENTS (Continued)

SECTION **PAGE NO.**

B2 SAMPLING METHODS REQUIREMENTS B2-1
B2.1 FIELD MEASUREMENT PROCEDURES B2-1

B3 SAMPLE HANDLING AND CUSTODY REQUIREMENTS B3-1
B3.1 FIELD CUSTODY PROCEDURES B3-1
B3.2 LABORATORY CUSTODY PROCEDURES B3-3
B3.3 FINAL EVIDENCE FILES B3-3

B4 ANALYTICAL METHODS REQUIREMENTS B4-1
B4.1 LABORATORY ANALYTICAL AND MEASUREMENT PROCEDURES B4-1
B4.1.1 List of Project Target Compounds and Detection Limits B4-1
B4.1.2 List of Associated Quality Control Samples B4-1

B5 QUALITY CONTROL REQUIREMENTS B5-1
B5.1 FIELD QUALITY CONTROL CHECKS B5-1
B5.1.1 Field Duplicates B5-1
B5.1.2 Rinsate Blanks B5-2
B5.1.3 Trip Blanks B5-2
B5.1.4 Temperature Blanks B5-2
B5.2 LABORATORY QUALITY CONTROL CHECKS B5-2
B5.2.1 Laboratory Control Samples B5-3
B5.2.2 Laboratory Duplicates B5-3
B5.2.3 Internal Standards B5-3
B5.2.4 Laboratory Method Blanks B5-4
B5.2.5 Matrix Spikes B5-4
B5.2.6 Matrix Spike Duplicates B5-4
B5.2.7 Surrogates B5-5
B5.2.8 Additional Laboratory Quality Control Checks B5-5

B6 EQUIPMENT TESTING, INSPECTION, AND MAINTENANCE REQUIREMENTS B6-1
B6.1 FIELD EQUIPMENT PREVENTATIVE MAINTENANCE B6-1
B6.2 LABORATORY INSTRUMENT PREVENTIVE MAINTENANCE B6-1
B6.3 INSPECTION / ACCEPTANCE REQUIREMENTS FOR SUPPLIES AND CONSUMABLES B6-3
B6.4 REFRIGERATORS/OVENS B6-3

B7 INSTRUMENT CALIBRATION AND FREQUENCY B7-1
B7.1 FIELD INSTRUMENT CALIBRATION B7-1
B7.2 LABORATORY INSTRUMENT CALIBRATION B7-3

B8 DATA MANAGEMENT B8-1
B8.1 CONTRACT COMPLIANCE SCREENING B8-1
B8.2 DATA VALIDATION B8-1
B8.3 DATA MANAGEMENT PROCEDURES B8-2

TABLE OF CONTENTS (Continued)

SECTION **PAGE NO.**

GROUP C ASSESSMENT/ OVERSIGHT

C1 ASSESSMENT AND RESPONSE ACTIONS C1-1
C1.1 FIELD PERFORMANCE AND SYSTEM AUDITS C1-1
C1.1.1 Internal Field Audits C1-1
C1.1.2 External Field Audits C1-3
C1.2 LABORATORY PERFORMANCE AND SYSTEMS AUDITS C1-3
C1.2.1 Internal Laboratory Audits C1-3
C1.2.2 External Laboratory Audits C1-4

C2 REPORTS TO MANAGEMENT C2-1

GROUP D DATA VALIDATION / USABILITY

D1 DATA REVIEW, VALIDATION, AND VERIFICATION REQUIREMENTS D1-1
D1.1 ACCURACY ASSESSMENT D1-1
D1.2 PRECISION ASSESSMENT D1-2
D1.3 COMPLETENESS ASSESSMENT D1-2
D1.4 DATA ASSESSMENT D1-2
D1.4.1 Reconciliation with Data Quality Objectives D1-3

D2 VALIDATION AND VERIFICATION METHODS D2-1
D2.1 DATA REDUCTION D2-1
D2.1.1 Field Data Reduction D2-1
D2.1.2 Laboratory Data Reduction D2-1
D2.2 DATA VALIDATION D2-1
D2.2.1 Procedures Used to Validate Field Data D2-2
D2.2.2 Procedures Used to Validate Laboratory Data D2-2
D2.3 DATA REPORTING D2-3
D2.3.1 Field Data Reporting D2-3
D2.3.2 Laboratory Data Reporting D2-3
D2.4 DATA ACQUISITION REQUIREMENTS AND DATA MANAGEMENT D2-4

D3 CORRECTIVE ACTION D3-1
D3.1 FIELD CORRECTIVE ACTION D3-1
D3.2 LABORATORY CORRECTIVE ACTION D3-1
D3.3 CORRECTIVE ACTION DURING DATA VALIDATION AND DATA ASSESSMENT D3-2
D3.4 CORRECTIVE ACTION FOR ADMINISTRATIVE ACTIVITIES D3-2

REFERENCES R-1

APPENDICES

A LABORATORY STANDARD OPERATING PROCEDURES
B FIELD STANDARD OPERATING PROCEDURES
C FRIDLEY DATA VALUATION SOP

TABLES

NUMBER		PAGE NO.
A6-1	Field Parameters for Groundwater Quality Testing Ranges and Increments of Detection	A6-2
A6-2	Analyte List and Analytical Detection Limits for Long Term Groundwater Monitoring	A6-4
A6-3	NPDES/SDS Effluent Monitoring Analytical Detection Limits	A6-5
A7-1	Quality Control Limits	A7-2
A7-2	Non-Calibration QC Sample Usage, Frequencies, Acceptance Limits and Corrective Actions	A7-3
A9-1	Project Documentation and Records	A9-4
B4-1	Summary of Aqueous Samples Analytical Procedures	B4-2
B6-1	Preventive Maintenance For En Chem Laboratories Analytical and Support Instruments	B6-2
C2-1	Summary of Reports	C2-2

FIGURES

NUMBER		PAGE NO.
A4-1	Project Organization Chart	A4-2
A6-1	Project Schedule	A6-7

ACRONYMS

%R	Percent recovery
µg/L	Micrograms per liter
AES	Atomic Emission Spectrum
AMR	Annual Monitoring Report
CFR	Code of Federal Regulations
CLEAN	Comprehensive Long-Term Environmental Action Navy
CLP	Contract Laboratory Program
COC	Chain-of-custody
CTO	Contract Task Order
DQO	Data quality objective
EDLC	Environmental data life cycle
FA	Field Activity
FFA	Federal Facilities Agreement
FOL	Field Operations Leader
FS	Feasibility Study
FSP	Field Sampling Plan
GC/MS	Gas chromatography/mass spectrometer
GWTF	Groundwater Treatment Facility
HASP	Health and Safety Plan
HPLC	High-performance liquid chromatography
HSM	Health and Safety Manager
ICP	Inductively Coupled Plasma
IDW	Investigation derived waste
LCD	Laboratory control duplicate
LCS	Laboratory control sample
MCL	Maximum Contaminant Level
MDL	Method Detection Limit
MES	Manager of Environmental Services
MPCA	Minnesota Pollution Control Agency
MS	Matrix spike
MSD	Matrix spike duplicate
NAVSEA	Naval Sea Systems Command
Navy	United States Navy
NFESC	Naval Facilities Engineering Service Center

NIROP	Naval Industrial Reserve Ordnance Plant
NIST	National Institute of Standards and Technology
NPDES	National Pollutant Discharge Elimination System
NTU	Nephelometric Turbidity Unit
OSHA	Occupational Safety and Health Administration
PARCC	Precision, accuracy, representativeness, comparability, and completeness
PE	Performance evaluation
PM	Project Manager
PPE	Personal protective equipment
QA	Quality Assurance
QAM	Quality Assurance Manager
QAO	Quality Assurance Officer
QAPP	Quality Assurance Project Plan
QC	Quality control
RAMP	Remedial Action Monitoring Plan
RAWP	Remedial Action Work Plan
RI	Remedial Investigation
RL	Reporting Limit
ROD	Record of Decision
RPD	Relative percent difference
RPM	Remedial Project Manager
SDG	Sample delivery group
SDS	State Disposal System
SDWA	Safe Drinking Water Act
SOP	Standard Operating Procedure
SOUTHNAVFACENGCOM	Southern Division, Naval Facilities Engineering Command
SSO	Site Safety Officer
TOM	Task Order Manager
TtNUS	Tetra Tech NUS, Inc.
USEPA	United States Environmental Protection Agency
VOC	Volatile organic compound

A4 PROJECT ORGANIZATION

This section presents project management and organization information including staffing and coordination requirements for this Field Activity (FA) at Naval Industrial Reserve Ordnance Plant (NIROP) located in Fridley, Minnesota. The authorities and organization relationship of key personnel are depicted in Figure A4-1.

A4.1 MANAGEMENT

At the direction of the United States Environmental Protection Agency (USEPA) Remedial Project Manager (RPM), Tetra Tech NUS, Inc. (TtNUS), on behalf of the United States Navy (Navy), is responsible for the overall management, implementation of contract FAs, and preparation of the FA plan and report. Personnel from the Navy will be actively involved and will coordinate with TtNUS personnel in a number of areas. Responsibilities for program management, project management, field operations, and laboratory operations are discussed in the following sections. It is intended that the individuals named will perform the designated activities based on personnel availability and project scheduling.

The Navy RPM is in charge overall at the site. Among Navy contractors, responsibility passes from Bay West to TtNUS as the effort passes from field operations to data management. The laboratory is a subcontractor to Bay West and delivers the data packages to Bay West. Bay West transfers this data to TtNUS. Requests or comments to the lab from TtNUS are addressed through Bay West.

A4.1.1 USEPA Remedial Project Manager

The USEPA RPM will oversee the implementation of the FA at NIROP Fridley and have ultimate approval authority for this Quality Assurance Project Plan (QAPP). The USEPA RPM represents the Agency's interests and will provide input from this perspective and lend general historical and technical assistance to NIROP Fridley field activities.

A4.1.2 Minnesota Pollution Control Agency Project Manager

The Minnesota Pollution Control Agency (MPCA) Project Manager (PM) will oversee the implementation of this FA from MPCA's perspective.

FIGURE A4-1

**PROJECT ORGANIZATION CHART
ANNUAL MONIOTIRNG REPORT
DATA ACQUISITION
NIROP FRIDLEY, MINNESOTA**

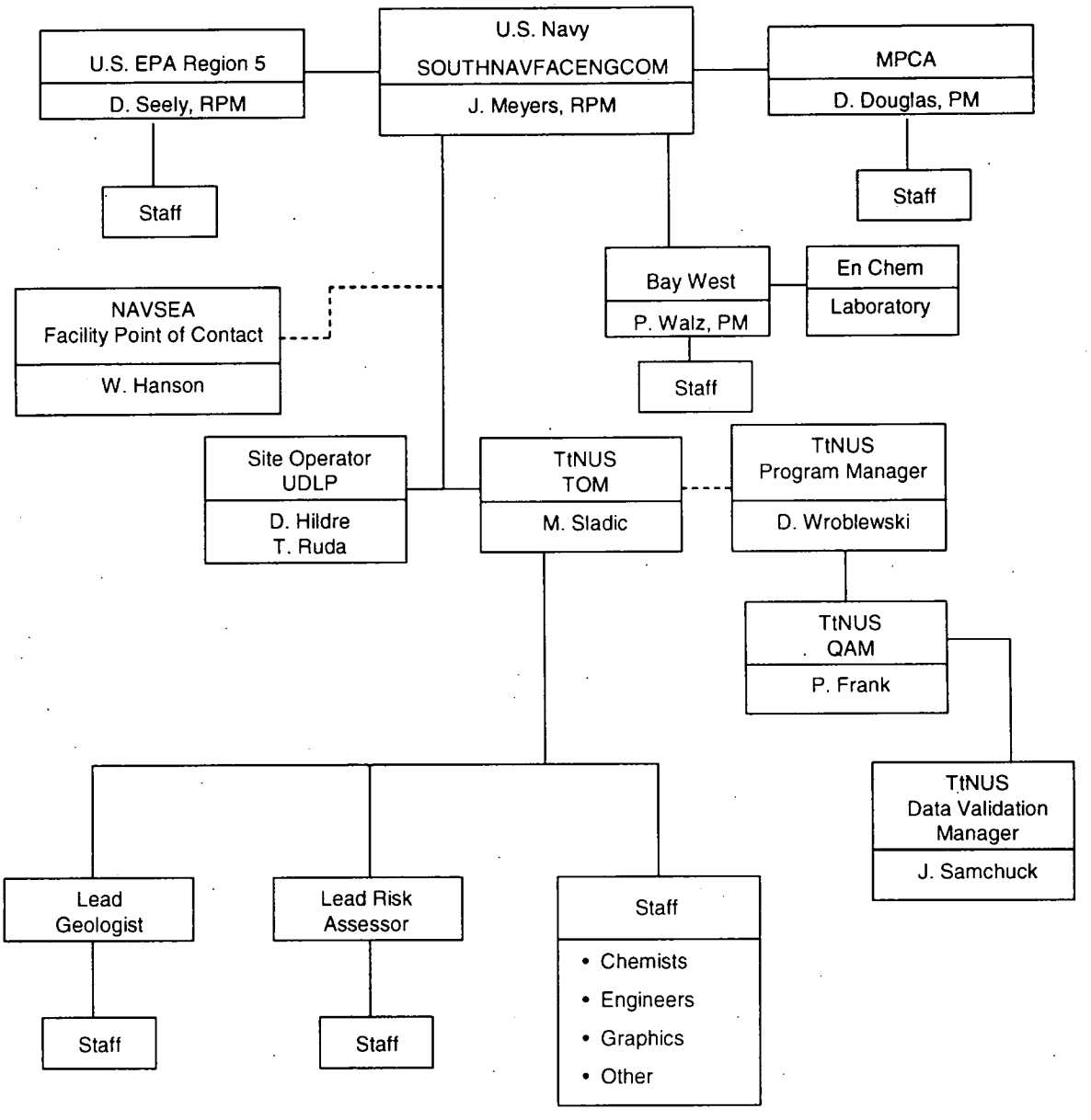

A4.1.3 Navy Project Manager

The Remedial Project Manager (RPM) acts as the focal representative for the Navy, providing management, technical direction, and oversight for all NIROP Fridley project activities performed by contractors (i.e., TtNUS) and their subcontractors (i.e., Bay West and En Chem). Additional responsibilities of the RPM are:

- Definition of project objectives and development of a detailed work plan schedule.
- Establishment of project policy and procedures to address the specific needs of the project as a whole, as well as the objectives of each task.
- Acquisition and application of technical resources (i.e., contractors) as needed to ensure performance within budget and schedule constraints.
- Review of the work performed on each task to ensure its quality, responsiveness, and timeliness.
- Review and analysis of overall task performance with respect to planned requirements and authorizations.
- Approval of all reports (deliverables) before their submission to USEPA Region 5.
- Maintain ultimate responsibility for the preparation and quality of interim and final reports.
- Representation of the project team at meetings and public hearings.

A4.1.4 Contractor Project Management

TtNUS Program Manager

The TtNUS Navy Southern Division Comprehensive Long-Term Environmental Action Navy (CLEAN) Program Manager provides operations, technical, and administrative leadership and oversees and supports quality policies. The Program Manager assigns and oversees the performance of the project Task Order Manager (TOM). The Program Manager also ensures the availability of technical and support resources for program operations and maintains consistency in procedures and projects among Contract Task Order (CTO) assignments. In these matters, the TOM assists the Program Manager.

TtNUS Task Order Manager

The TtNUS TOM has the overall responsibility for ensuring that the project meets USEPA and MPCA objectives and Navy and TtNUS quality standards. The TOM is responsible for the preparation and distribution of the QAPP at the direction of the Navy RPM to all parties connected with the project including any subcontractors. The TOM will report to the Navy RPM and is responsible for technical quality control (QC) and project oversight. Additional responsibilities of the TOM are:

- Ensuring of timely resolution of project-related technical and quality issues.
- Functioning as primary interface with the Navy RPM, field and office personnel, and subcontractors points-of-contact.
- Monitoring and evaluation of laboratory performance.
- Coordination and oversight of work performed by field and office technical staff (including data validation, statistical evaluations, and report preparation).
- Coordination and oversight of the maintenance of all project records.
- Coordination and oversight of review of project deliverables.
- Preparation and issuing of final deliverables to the Navy.
- Approval of the implementation of corrective action.

Bay West Manager of Environmental Services

The Bay West Manager of Environmental Services (MES) provides operations, technical, and administrative leadership and oversees and supports quality policies. The MES assigns PMs and oversees their performance. The MES also ensures the availability of technical and support resources for program operations and maintains consistency in procedures and projects among assignments. In these matters, the MES is assisted by the PM.

Bay West Project Manager

The Bay West PM has the overall responsibility for ensuring that the project meets the USEPA and MPCA objectives and Navy and Bay West quality standards. The PM is responsible for the distribution of the laboratory data at the direction of the Navy RPM to parties connected with the project including other Navy contractors. The PM will report to the Navy RPM and is responsible for technical QC and project oversight. Additional responsibilities of the PM are:

- Ensuring of timely resolution of project-related technical, quality, safety, or waste management issues.
- Functioning as primary interface with the Navy RPM, field and office personnel, and subcontractor points-of-contact.
- Monitoring and evaluation of laboratory performance.
- Coordination and oversight of work performed by field and office technical staff (including report preparation).
- Coordinating and oversight of maintenance of all project records.
- Approval of the implementation of corrective action.

Bay West Health and Safety Manager

The Bay West Health and Safety Manager (HSM) is responsible for the following:

- Oversight of the development and review of the Site Security and Health and Safety Plan (HASP).
- Conducting of Health and Safety audits.
- Preparation of Health and Safety reports for management.

A4.2 QUALITY ASSURANCE

This section identifies the quality assurance (QA) responsibilities for the NIROP Fridley monitoring program. Responsibilities of the USEPA Region 5, TtNUS, and the analytical laboratory are discussed.

A4.2.1 USEPA Region 5 Quality Assurance Coordinator

The USEPA Region 5 QA Coordinator has the responsibility to review and approve the QAPP and provide overall QA support and review. Additional responsibilities may include:

- Coordination of external performance and system audits of the contracted laboratory.
- Review and evaluation of analytical field and laboratory procedures.

A4.2.2 Navy Quality Assurance Manager

The Navy QA Manager will remain independent of direct job involvement and day-to-day operations and will have direct access to resources, as necessary, to resolve any QA issues. The Navy QA Manager is responsible for auditing the implementation of the QA program in conformance with the demands of the specific investigation, TtNUS policies, and USEPA requirements. The Navy QA Manager has sufficient authority to stop work on the investigation as deemed necessary in the event of serious QA/QC issues. Specific functions and duties include:

- Performing QA audits on various phases of the field operations.
- Reviewing and approving QA plans and procedures.
- Providing QA technical assistance to project staff.
- Reporting on the adequacy, status, and effectiveness of the QA program on a regular basis to the Navy PM and executive vice president for technical operations.

A4.2.3 TtNUS Quality Assurance Manager

The TtNUS QA Manager (QAM) is responsible for overall QA for the project, and reports directly to the TtNUS Program Manager. The QAM has the responsibility for the following specific activities:

- Developing, maintaining, and monitoring QA policies and procedures.
- Providing training to TtNUS staff in QA/QC policies and procedures.
- Conducting systems and performance audits to monitor compliance with environmental regulations, contractual requirements, QAPP requirements, and corporate policies and procedures.
- Auditing project records.
- Monitoring subcontractor quality controls and records.
- Assisting in the development of corrective action plans.
- Ensuring correction of nonconformances reported in internal or external audits.
- Overseeing and reviewing the development and revision of the QAPP.

- Overseeing the implementation of the QAPP.
- Overseeing the responsibilities of the TtNUS Site QA/QC Advisor.
- Preparing QA reports for management.

A4.2.4 TtNUS Project Quality Assurance Advisor

The TtNUS Project QA Advisor provides support to the TOM in preparation and review of the QAPP, coordination of work performed by office technical staff, and performance of data assessment. The Project QA Advisor communicates directly with the QAM on matters of QA/QC.

A4.2.5 TtNUS Data Validation Manager

The TtNUS Data Validation Manager, Joe Samchuck, is responsible for data validation for the project and reports directly to the TtNUS QAM. The Data Validation Manager has the following responsibilities:

- Schedules and assigns data validation tasks.
- Reviews data validation staff work.

A4.2.6 Laboratory Responsibilities

All samples collected as part of this investigation will be analyzed by En Chem. Field samples will be received and logged in by En Chem's Green Bay facility, located at, 1241 Bellevue Street, Green Bay, Wisconsin 54302. En Chem will then transfer the samples to their Kimberly facility located at, 1090 Kennedy Avenue, Kimberly, Wisconsin 54136. The phone number for both locations is (920) 469-2436. All work on site is conducted by the Navy's contractors, or subcontractors to these contractors. As such, the Navy RPM (see Figure A4-1) has overall charge of QA on the site.

The subcontracted laboratory is responsible for analyzing all samples in accordance with the analytical methods and additional requirements specified in this QAPP. It also will be the analytical laboratory's responsibility to properly dispose of unused sample aliquots. Responsibilities of key laboratory personnel are outlined in the following paragraphs.

All samples for submittal to the laboratory will be groundwater. All samples will be analyzed only for the following parameters: 1,1-Dichloroethane, 1,1-Dichlorothene, cis-1,2-Dichloroethene, trans-1,2-Dichlorothene, 1,1,1-Trichloroethane, Tetrachloroethene, Trichloroethene, and vinyl chloride.

Laboratory Project Manager

The Laboratory PM will report directly to the Bay West PM and will:

- Ensure that method and project-specific requirements are properly communicated and understood by laboratory personnel.
- Ensure that all laboratory resources are available on an as-required basis.
- Monitor analytical and project QA requirements.
- Review data packages for completeness, clarity, and compliance with project requirements.
- Inform the Bay West PM of project status and any sample receipt or analytical problems.

Laboratory Director

Responsibilities of the Laboratory Director include the following:

- Support of the QA program within the laboratory.
- Providing management overview of both production and quality-related laboratory activities.
- Maintaining adequate staffing to meet project analytical and quality objectives.
- Approving all laboratory Standard Operating Procedures (SOPs) and QA documents.
- Supervising in-house chain-of-custody (COC) documentation.
- Overseeing the preparation and approval of final analytical reports prior to submittal to TtNUS.

Laboratory Quality Assurance Officer

The Laboratory QA Officer (QAO) has the overall responsibility for data after it leaves the laboratory. The Laboratory QAO will be independent of the laboratory but will communicate data issues through the Laboratory PM.

In accordance with the QA Manual found in Appendix A of the QAPP, the laboratory QA Officer shall:

- Oversee laboratory QA
- Oversee QA/QC documentation
- Conduct detailed data review
- Determine whether to implement laboratory corrective actions
- Define appropriate laboratory QA procedures
- Prepare laboratory SOPs

- Conduct annual laboratory audits
- Manage the laboratory quality control limits
- Manage laboratory certifications
- Issue updates to the laboratory QA Manual

Independent QA will be provided by the Laboratory PM and QAO prior to release of all data to TtNUS. The person responsible for the overall QA for the site is the Navy RPM.

Laboratory Sample Custodian

The Laboratory Sample Custodian will report to the Laboratory Director. Responsibilities of the Laboratory Sample Custodian include the following:

- Receiving and inspecting the incoming sample containers.
- Recording the condition of the incoming sample containers.
- Signing appropriate documents.
- Verifying COC.
- Notifying laboratory manager and laboratory supervisor of sample receipt and inspection.
- Assigning a unique identification number and customer number, and entering each into the sample receiving log.
- With the help of the laboratory manager, initiating transfer of the samples to appropriate lab sections.
- Controlling and monitoring access/storage of samples and extracts.

Laboratory Technical Staff

The Laboratory Technical Staff will be responsible for sample analysis and identification of corrective actions. The staff will report directly to the Laboratory Director.

A4.3 FIELD INVESTIGATION

Bay West will be responsible for all field activities related to this background investigation. The Bay West field team will be organized according to the activities planned. Field team members will be selected based on the type and extent of effort required. All team members will be appropriately skilled and trained for the tasks they are assigned to perform. The team will consist of a combination of the following personnel:

- Field Operations Leader (FOL)
- Site QA/QC Advisor
- Site Safety Officer (SSO)
- Field Technical Staff

A4.3.1 Field Operations Leader

The FOL is responsible for coordinating all on-site personnel and for providing technical assistance, when required. The FOL, or designee, will coordinate and lead all sampling activities, will identify and document field nonconformances to project requirements, and will ensure the availability and maintenance of all sampling materials/equipment. The FOL is responsible for the completion of all sampling, field and COC documentation, will assume custody of all samples, and will ensure the proper handling and shipping of samples. The FOL will be a highly experienced environmental professional who will report directly to the Bay West PM. Specific FOL responsibilities include the following:

- Functioning as a communications link between field staff members, the Site QA/QC Advisor, SSO, the NIROP Fridley, the Navy, and TtNUS.
- Overseeing the mobilization and demobilization of all field equipment and subcontractors.
- Coordinating and managing the field technical staff.
- Adhering to the work schedules provided by the Navy.
- Bearing responsibility for maintenance of the site logbook, field logbook, and field recordkeeping.
- Initiating field task modification requests when necessary.
- Identifying and resolving problems in the field.
- Resolving difficulties in consultation with the Navy.
- Implementing and documenting corrective action procedures, and providing communication between the field team and upper management.

A4.3.2 Site Quality Assurance/Quality Control Advisor

The FOL (or their assistant) will act as the Site QA/QC Advisor, who is responsible for ensuring adherence to all QA/QC guidelines as defined in the QAPP. Strict adherence to these procedures is critical to the collection of acceptable and representative data. The following is a summary of the Site QA/QC Advisor's responsibilities:

- Ensuring that field duplicates and field QC blanks are collected with the proper frequency.
- Ensuring that additional volumes of sample are supplied to the analytical laboratory with the proper frequency to accommodate laboratory QA/QC analyses.
- Ensuring that measuring and test equipment are calibrated, used, and maintained in accordance with applicable procedures.
- Acting as liaison between site personnel, laboratory personnel, and the QAM.
- Managing bottleware shipments and overseeing field preservation.

A4.3.3 Site Safety Officer

The FOL (or designee) will also serve as the SSO. The duties of the SSO are detailed in the HASP. The SSO has stop-work authority, which can be executed upon the determination of an imminent safety hazard.

A4.3.4 Field Technical Staff

The Field Technical Staff for this project will be drawn from Bay West's pool of qualified personnel. All of the designated field team members will be experienced professionals who possess the degree of specialization and technical competence required to effectively and efficiently perform the required work.

Field staff are responsible for complying with field-related requirements as presented in the QAPP.

A5 PROBLEM DEFINITION / BACKGROUND INFORMATION

A5.1 FACILITY HISTORY

Detailed discussions of the general history of the NIROP and past data collection activities at the facility are included in Section 1.1 of the Remedial Action Monitoring Plan (RAMP).

A5.1.1 General History

The NIROP has been in operation since 1940 and is a production facility for Naval ordnance. Items produced at the facility have included gun mounts and advanced missile-launching systems.

A5.1.2 Past Data Collection Activities

Results of past data collection activities can be found in the Annual Monitoring Reports (AMRs) and the Remedial Investigation (RI) and Feasibility Study (FS) reports.

A5.2 FACILITY DESCRIPTION

A brief discussion of general site characteristics of the NIROP, including its location, size and borders, regional geology, hydrogeology, topography, etc. is provided in Section 2.0 of the RAMP.

A5.3 PROJECT STATUS

The groundwater extraction system and pretreatment facilities at NIROP Fridley began operating in September 1992. Monitoring of these facilities and associated monitoring wells has been performed since startup according to the procedures described in the Remedial Action Work Plan for Groundwater Remediation (RMT, 1995) that was approved by USEPA Region 5 and the MPCA. Construction of the Phase II on-site GWTF began in September 1997. Construction was completed and the facility was in operation in December 1998. Treated groundwater from this facility is now discharged to the Mississippi River through Outfall 020 (NPDES/SDS Permit MN0000710) (MPCA, 1996).

A five-year review of the selected remedy for groundwater outlined in the Record of Decision (ROD) (USEPA, 1990) was signed in September 1998. The five-year review recommended the continued operation, maintenance, and upgrade (if necessary) of the groundwater containment and recovery system, with eventual on-site treatment and discharge of treated groundwater in accordance with the NPDES/SDS permit.

A5.4 QUALITY ASSURANCE PROJECT PLAN PREPARATION GUIDELINES

This QAPP has been prepared in accordance with the general guidance outlined in the USEPA Region 5 Instructions on the Preparation of a Superfund Division Quality Assurance Project Plan (USEPA, 2000). Additional guidance regarding the QAPP contents was provided in USEPA requirements for Quality Assurance Project Plans, QA/R-5 (USEPA, 1999b).

A5.5 OVERALL PROJECT OBJECTIVES

The general project objectives for the Fridley groundwater extraction and treatment system are outlined in the Federal Facilities Agreement (FFA) for the NIROP. Attachment B of the FFA outlines the general project objectives as follows:

1. To specify all short- and long-term monitoring of surface water, groundwater, sediment, sludge, and soil necessary to determine the status and effectiveness of the remedial actions implemented at the site, and

2. To develop and implement a monitoring plan that is designed to detect changes/increases in chemical concentrations of contaminated groundwater at and adjacent to the site.

The project purpose and scope are discussed in Section 1.2 of the RAMP. Detailed discussions of the objectives of the groundwater monitoring and the National Pollutant Discharge Elimination System (NPDES)/State Disposal System (SDS) effluent monitoring are found in Sections 4.1 and 5.1, respectively, in the RAMP.

A5.6 PROJECT OBJECTIVES

Objectives for the groundwater monitoring are discussed in Section 4.1 of the RAMP. Specific data quality objectives (DQOs) for groundwater chemical analysis were discussed in the March 2002 Well Selection Meeting that resulted in Table 4-4 of the RAMP. The content of this table was approved by all DQO developers including USEPA Region 5, MPCA, the Navy, and TtNUS. Objectives for the NPDES and SDS are discussed in Section 5.1 of the RAMP.

The ultimate objective of groundwater remediation is to restore groundwater quality to Safe Drinking Water Act (SDWA) Maximum Contaminant Levels (MCLs). Work conducted under this QAPP will be used to monitor progress toward and attainment of this objective.

A5.7 DATA QUALITY OBJECTIVES

DQOs for the Fridley FA were developed in accordance with current USEPA guidance through a series of meetings involving the USEPA, MPCA, Navy, and Navy contractors. Refer to the Well Selection Meeting Notes of March 2002 for further information (Appendix B of RAMP).

A6 PROJECT DESCRIPTION AND SCHEDULE

This project description outlines the overall scope of FAs to be performed for NIROP located in Fridley, Minnesota. This QAPP addresses monitoring requirements associated with the groundwater extraction and treatment system as defined in the ROD for Groundwater Remediation (USEPA, 1990). The QAPP presents the organization, objectives, planned activities, and specific QA/QC procedures associated with the Remedial Action Work Plan (RAWP) for the FA. Specific protocols for sampling, sample handling and storage, COC, and laboratory and field analyses are described. All QA/QC procedures are structured in accordance with applicable technical standards, and USEPA Region 5 and MPCA requirements, regulations, guidance, and technical standards.

A6.1 INTRODUCTION

This QAPP has been prepared by TtNUS on behalf of the Navy Southern Division, Naval Facilities Engineering Command (SOUTHNAVFAVENGCOM) and the NIROP, Fridley, Minnesota. This QAPP and other associated documents constitute the project planning documents for the groundwater extraction and treatment system. This QAPP is Volume II of the RAWP, Volume I contains the RAMP.

A6.2 PROJECT TARGET PARAMETERS AND INTENDED DATA USES

This section discusses the field and laboratory analytical information to be generated during the course of the FA. Field parameters and intended data uses are discussed in Section A6.2.1. Laboratory parameters and intended data uses are discussed in Section A6.2.2. The site history and past investigations identified VOCs in groundwater to be the only contaminants of interest. The following sections identify field and laboratory analyte lists that will support the attainment of project objectives.

A6.2.1 Field Parameters

Field parameters will include those associated with the completion of purging and stabilization of monitoring wells and groundwater sampling and analysis. Field measurements will include only those completed using simple field instrumentation.

Field parameters including pH, specific conductance, turbidity, and temperature will be completed for aqueous phase samples using a water quality meter as discussed in Section 4.3.2.2 and 5.3.2 of the RAMP. These measurements will be used to support monitoring well development and purging of stagnant water from well casings. Specific conductance and pH will also be used as general indicators of water quality. The ranges of acceptable levels for the field parameters are found in Table A6-1. Details

TABLE A6-1

FIELD PARAMETERS FOR GROUNDWATER QUALITY TESTING RANGES AND INCREMENTS OF DETECTION NIROP FRIDLEY, MINNESOTA

Parameter	Method	Stabilization Criteria
pH	Meter	± 0.1 Standard units
Specific Conductance	Meter	± 20 mV
Turbidity	Meter	≤ 5 Nephelometric turbidity units (NTU)
Temperature	Meter	± 0.1° Celsius

concerning how field measurements will be evaluated relative to those limits are included in the field SOPs (Appendix B).

A6.2.2 Laboratory Parameters

Laboratory parameters will include a select list of volatile organic compounds (VOCs). It should be noted that SW-846 Method 8260B, modified by using 5 milliliter purge volume, will be used for the analysis of VOCs for groundwater samples. This method will be used in place of standard Contract Laboratory Program (CLP) protocol in order to achieve lower quantitation limits for VOCs in groundwater because these are the compounds of primary concern at the site. Analytical methods are further discussed in Section B4. Tables A6-2 and A6-3 provide a summary of all target laboratory analytes and associated Reporting Limits (RLs) and Method Detection Limits (MDLs). Quantitation and detection limits are further discussed in Section B4.1.1.

A6.3 DATA VALIDATION

Data will be verified by comparing the laboratory data deliverables against the laboratory subcontract and QAPP requirements. These requirements address both the deliverable content and format. Further detail is provided in Section D2. Data will be validated in accordance with the National Functional Guidelines for data validation, as described in more detail in Section D2. TtNUS will perform both the verification and validation of data. The quantitative and qualitative measurement performance assessments of precision, accuracy, representativeness, completeness, and comparability are described in Section D1. Compliance with SOPs will be assessed by the FOL in accordance with Section D1.1.

A6.4 SAMPLE NETWORK DESIGN AND RATIONALE

The sample network design and rationale are discussed in detail in Section 4.2 of the RAMP. Figures displaying the locations of all proposed borings and monitoring wells are provided in Figure 4-1 of the RAMP.

A6.5 PROJECT SCHEDULE

The project schedule will be provided each year by the Navy based on each year's:

- Completion of past year AMR/QAPP update team review.
- Availability of the Navy's sample contractor.
- Coordination with UDLP.

TABLE A6-2

ANALYTE LIST AND ANALYTICAL DETECTION LIMITS FOR LONG TERM GROUNDWATER MONITORING NIROP FRIDLEY, MINNESOTA

Continue Analysis	Delete from Analysis	Parameter[1]	MCL (µg/L)	MDL (µg/L)	RL (µg/L)	Frequency of Detection (all data to date)	Range of Detection (ug/L)	Location of Maximum Concentration (date and round in [ ])
X		**1,1,1-Trichloroethane**	200	0.23	1	202/1436	0.2 - 690	003-TW-033-01
	X	1,1,2,2-Tetrachloroethane	NC	0.68	1	2/1077	0.4 - 2	MS09D-[94_R08]
	X	1,1,2-Trichloroethane	5	0.47	1	4/1077	0.2 - 1	003-TW-033-01
X		**1,1-Dichloroethane**	NC	0.2	1	418/1436	0.2 - 170	M05PC-[90_R11]
X		**1,1-Dichloroethene**	7	0.34	1	142/1436	0.2 - 380	003-TW-033-01
	X	1,2-Dichloroethane	5	0.54	1	11/1077	0.3 - 8.2	003-TW-033-01
	X[2]	**1,2-Dichloroethene (total)**	NC	0.9	2	739/1051	0.3 - 15000	MS08S-[92_R12]
X[2]		**cis-1,2-Dichloroethene**	70	0.28	1	143/317	0.2 - 2440	18-S-[88_R01]
X[2]		**trans-1,2-Dichloroethene**	NC	0.79	1	100/385	0.2 - 4700	18-S-[86_R04]
	X	1,2-Dichloropropane	5	0.34	1	0/1076	0	--
	X	2-Butanone	NC	1.25	5	10/985	3 - 270	GW-02-D
	X	2-Hexanone	NC	0.61	5	6/931	0.8 - 700	MS04I-[92_R12]-D
	X	4-Methyl-2-pentanone	NC	0.61	5	11/987	0.8 - 16	MS26S-[97_R04]
	X[3]	**Acetone**	700	3.09	5	282/927	0.2 - 3700	MS02PC-[96_R10] / MS02PC-[97_R10]
	X	Benzene	5	0.44	1	70/1436	0.2 - 49	MS12I-[97_R04]
	X	Bromodichloromethane	80	0.41	1	0/1077	0	--
	X	Bromoform	80	0.58	1	0/1077	0	--
	X	Bromomethane	NC	0.94	2	0/1077	0	--
	X	Carbon Disulfide	NC	0.4	1	49/1030	0.2 - 400	MS15S-[92_R10C]
	X	Carbon Tetrachloride	5	0.9	1	0/1077	0	--
	X	Chlorobenzene	100	0.43	1	1/1077	1.1	MS01I-[97_R10]
	X	Chlorodibromomethane	NC	--	--	0/894	0	--
	X	Chloroethane	NC	0.63	2	1/1077	0.3 - 0.4	003-MS-33I-01-D
	X	Chloroform	80	0.41	1	15/1436	0.3 - 51	AT03A-[92_R11]
	X	Chloromethane	NC	0.44	2	13/1077	0.2 - 1.2	003-MS-33I-01
	X	cis-1,3-dichloropropene	NC	0.54	1	1/1077	1400	MS24S-[96-R01]-D
	X	Ethylbenzene	700	0.5	1	50/1436	0.2 - 820	003-TW-P04-01
	X[4]	**Methylene Chloride**	5	0.38	1	138/1436	0.46 - 41000	2-S-[83_R10]
	X	Styrene	100	0.37	1	4/1030	1.7 - 65	MS18S-[92_R12]
X		**Tetrachloroethene**	5	0.25	1	484/1436	0.2 - 560	PC-5-[99_R11]
	X[5]	**Toluene**	1,000	0.4	1	134/1436	0.2 - 240	003-TW-P10-01
	X	trans-1,3-Dichloropropene	NC	0.26	1	0/1077	0	--
X		**Trichloroethene**	5	0.57	1	1187/1436	0.4 - 140000	GW-01
X		Vinyl Chloride	2	0.3	2	32/1278	0.2 - 40	003-TW-P09-01
	X[6]	**Xylenes, Total**	10,000	1.25	2	70/1152	0.3 - 90	MS18S-[92_R12]
8	27	Totals						

Notes:

Bold analytes indicate detection at a frequency greater than 5 percent.

1 Volatile organic compounds, SW-846 method 8260B .

2 cis-1,2-DCE and trans-1,2-DCE to be analyzed in place of 1,2-DCE (total) .

3 Not detected in the Fall 1999 Sampling Event; Detections attributed to laboratory blank contamination.

4 Not detected in the Fall of 1999 event (the most comprehensive and extensive sampling event).

5 Maximum detection below screening criterion930 of 1,000 ug/L.

6 Maximum detection below screening criterion of 10,000 ug/L.

MCL = Maximum contaminant level.

MDL = Method detection limit.

RL = Reporting limit.

NC = No criterion.

-- = Not applicable/available.

TABLE A6-3

NPDES/SDS EFFLUENT MONITORING ANALYTICAL DETECTION LIMITS NIROP FRIDLEY, MINNESOTA

Parameter	Daily Maximum (µg/L)[1]	MDL (µg/L)	RL (µg/L)
1,1-Dichloroethane	70	0.87	1
1,1-Dichloroethene	6.0	0.56	1
cis-1,2-Dichloroethene	70	0.31	1
trans-1,2-Dichloroethene	100	0.80	1
Tetrachloroethene	3.8	0.63	1
1,1,1-Trichloroethane	200	0.65	1
Trichloroethene	5.0	0.39	1
Vinyl Chloride	NS	0.11	1

1 Specified in NPDES Permit MN0000710

NS = Not specified.
RL = Reporting Limit.
MDL = Method Detection Limit (as provided by En Chem).
-- = Not applicable.

Most years, annual sampling of groundwater will be scheduled in mid-October, with a Draft AMR provided by March 31 to discuss the results. Figure A6-1 provides a bar-chart project schedule for 2002 sampling that will be conducted in 2003.

FIGURE A6-1
PROJECT SCHEDULE
NIROP FRIDLEY, MINNESOTA

ID	Task Name	Duration	Start	Finish
1	Team Review RAWP Revision	7 days	Jan 20	Jan 26
2	Team Approves RAWP	1 day	Jan 27	Jan 27
3	Mobilize Sampling Effort	10 days	Jan 28	Feb 6
4	AMR Field Sampling	12 days	Feb 7	Feb 18
5	Laboratory Analysis	35 days	Feb 19	Mar 25
6	Data Validation	30 days	Mar 26	Apr 24
7	Prepare Draft AMR	30 days	Apr 25	May 24
8	Team Review AMR	30 days	May 25	Jun 23
9	Resolve Team Comments	21 days	Jun 24	Jul 14
10	Finalize AMR Report	10 days	Jul 15	Jul 24
11	Team Approves AMR	1 day	Jul 25	Jul 25
12	Team Reviews Proposed RAWP Revs	30 days	May 25	Jun 23
13	Resolve RAWP Revs	21 days	Jun 24	Jul 14
14	Update RAWP	21 days	Jul 15	Aug 4
15	Team Reviews RAWP Revs.	21 days	Aug 5	Aug 25
16	Set Schedule for 2003 Sampling	1 day	Aug 26	Aug 26

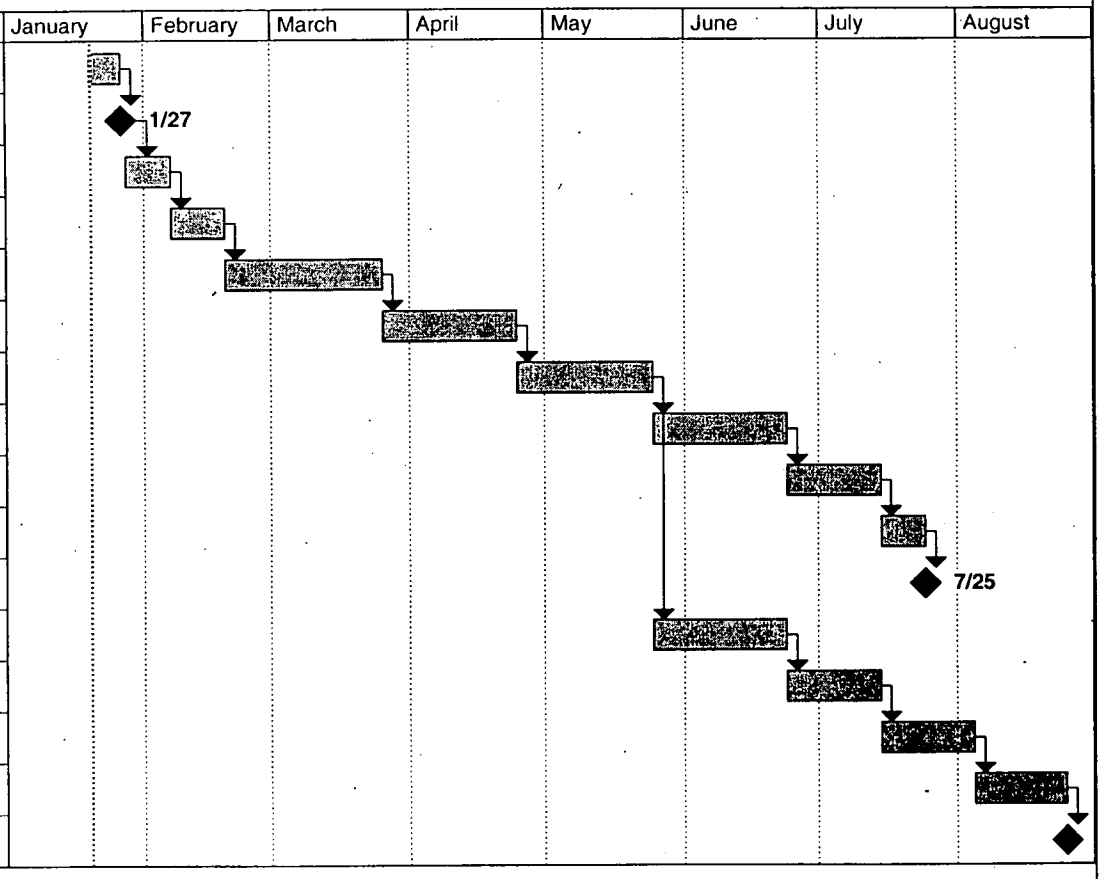

Project: FRIDLEY_02_AMR
Date: Jan 20

Task		Summary		Rolled Up Progress	
Split		Rolled Up Task		External Tasks	
Progress		Rolled Up Split		Project Summary	
Milestone		Rolled Up Milestone			

A7 QUALITY OBJECTIVES AND CRITERIA FOR MEASUREMENT DATA

The overall QA objective for this project is to develop and implement procedures for field sampling, COC, laboratory analysis, and data management and reporting that will provide results sufficient to support attainment of the project objectives specified in Section A5 through A7. Intended data uses, including the list of project target parameters, are described in 7-step DQO process included in Appendix B of the RAMP. Data comparisons and the associated decision-making process are described in Section D1.4. Specific procedures for sampling, COC, laboratory instrument calibration, laboratory analysis, internal QC, reporting of data, audits, preventive maintenance of field and laboratory equipment, data management, corrective action, and reporting to management are described in remaining sections of this QAPP. Overall QC level of effort is described in Section A7.6.

The precision, accuracy, representativeness, comparability, and completeness (PARCC) parameters are qualitative and quantitative statements regarding the quality characteristics of the data used to support project objectives and ultimately, environmental decisions. These parameters are presented in the remainder of this section. QC samples used to evaluate performance and their frequencies of use are described in Section B5.1 (field QC samples), and Section B5.2 (laboratory QC samples). Equations used to compute accuracy, precision, and completeness values are provided in Sections D1.1 through D1.3. Data quality objectives developed for NIROP Fridley are presented in the Well Selection Meeting Notes provided in Appendix B of the RAMP.

A7.1 PRECISION

A7.1.1 Definition

Precision is a measure of the degree to which two or more measurements are in agreement and describes the reproducibility of measurements of the same parameter for samples analyzed under similar conditions. A fundamental tenet of using precision measurements for QC is that precision will be bounded by known limits. Results outside these predetermined limits trigger corrective actions.

By definition, chemical solutions (e.g., VOCs in groundwater) are uniform in composition. Therefore, ignoring any imprecision caused by the sample matrix, the variability of analytical results for water samples should be relatively low unless suspended material or sample handling and storage introduce additional imprecision. Precision acceptance criteria for aqueous duplicate samples have been assigned accordingly in Table A7-1. Results outside of these limits will trigger corrective actions, which are presented in Table A7-2.

TABLE A7-1

GROUNDWATER QUALITY CONTROL LIMITS
NIROP FRIDLEY, MINNESOTA

Chemical	MS/MSD Samples[1]		LCS/LCD Samples		Field Duplicate RPD[2]
	%R	RPD	%R	RPD	
SW-846 METHOD 8260B					
1,1-Dichloroethane	82-121	0-20	80-120	0-25	0-30
1,1-Dichloroethene	83-125	0-20	82-127	0-20	0-30
cis-1,2-Dichloroethene	80-120	0-20	65-135	0-25	0-30
trans-1,2-Dichloroethene	80-120	0-20	65-135	0-25	0-30
1,1,1-Trichloroethane	87-127	0-20	60-135	0-25	0-30
Tetrachloroethene	88-121	0-13	55-150	0-30	0-30
Trichloroethene	70-130	0-30	80-120	0-20	0-30
Vinyl chloride	62-137	0-30	55-150	0-30	0-30
4-Bromofluorobenzene (surrogate)	60-130	0-20	60-130	0-20	0-30
Dibromofluoromethane (surrogate)	60-130	0-20	60-130	0-20	0-30
Toluene d-8 (surrogate)	65-130	0-20	60-130	0-20	0-30
EPA METHOD 624					
1,1-Dichloroethane[1]	82-121	0-20	80-120	0-20	0-30
1,1-Dichloroethene[1]	83-125	0-20	70-130	0-20	0-30
cis-1,2-Dichloroethene[1]	NA	NA	65-135	0-25	0-30
trans-1,2-Dichloroethene[1]	NA	NA	65-135	0-25	0-30
1,1,1-Trichloroethane[1]	87-127	0-20	60-135	0-25	0-30
Tetrachloroethene[1]	88-121	0-13	55-150	0-25	0-30
Trichloroethene[1]	70-130	0-30	80-120	0-20	0-30
Vinyl chloride	62-137	0-30	55-150	0-30	0-30
4-Bromofluorobenzene (surrogate)	60-130	0-20	60-130	0-20	0-30
Dibromofluoromethane (surrogate)	60-130	0-20	60-130	0-20	0-30
Toluene d-8 (surrogate)	65-130	0-20	60-130	0-20	0-30

1 These acceptance limits apply to spikes that augment the native sample analyte concentration by at least 25 percent.

2 These acceptance limits apply to original and duplicate sample concentrations greater than five times the reporting limit. If one of the results is greater than five times the reporting limit, the acceptance criterion is ±RL. If one or the other results is a non-detect, the reported percent RPD will be 200 percent.

%R = Percent recovery.
LCS/LCD = Laboratory control sample/laboratory control duplicate.
MS/MSD = Matrix spike/matrix spike duplicate.
RPD = Relative percent difference.

TABLE A7-2

NON-CALIBRATION QC SAMPLE USAGE, FREQUENCIES, ACCEPTANCE LIMITS, AND CORRECTIVE ACTIONS
NIROP FRIDLEY, MINNESOTA
PAGE 1 OF 2

QC Sample Type	Collection Frequency	Acceptance Limits	Corrective Action
Field Duplicate(1)	1 per 10 investigative samples collected.	See Table A7-1	Qualify data according to data validation requirements.
Equipment Rinsate Blank	1 per 10 investigative samples collected, with a minimum of one per day of sampling, per non-disposable sampling device/instrument. For pre-cleaned, dedicated, and/or disposable equipment (i.e., disposable plastic trowels, etc.), one rinsate blank will be collected and analyzed at a frequency of one per lot or "batch blank" for a specific equipment type.	< RL	Identify source of contamination, if feasible. Qualify data according to validation criteria. Qualify use of data if contamination appears to have adversely affected its usability.
Internal Standard	At least one internal standard per sample for GC/MS analyses.	Retention times stable to ± 30 seconds; area counts stable to within factor of 2.	Laboratory action taken per applicable SOP. TtNUS action taken per validation protocols and Section D1.4.
Laboratory Control Sample	1 per 20 environmental samples per matrix.	See Table A7-1	Laboratory action taken per applicable SOP. TtNUS action taken per validation protocols and Section D1.4.
Laboratory Duplicate (except VOCs)	1 per 20 environmental samples analyzed for target analytes.	See Table A7-1	Laboratory action taken per applicable SOP. TtNUS action taken per validation protocols and Section D1.4.
Laboratory Method Blank	1 per 20 environmental samples or per preparation batch, whichever is more frequent.	< RL	Laboratory action taken per applicable SOP. TtNUS action taken per validation protocols and Section D1.4.
Matrix Spike(2)	1 per 20 environmental samples.	See Table A7-1	Laboratory action taken per applicable SOP. TtNUS action taken per validation protocols and Section D1.4.
Matrix Spike Duplicate(2)	1 per 20 environmental samples analyzed for organic target analytes.	See Table A7-1	Laboratory action taken per applicable SOP. TtNUS action taken per validation protocols and Section D1.4.

TABLE A7-2

NON-CALIBRATION QC SAMPLE USAGE, FREQUENCIES, ACCEPTANCE LIMITS, AND CORRECTIVE ACTIONS NIROP FRIDLEY, MINNESOTA PAGE 2 OF 2

QC Sample Type	Collection Frequency	Acceptance Limits	Corrective Action
Surrogate	At least one per sample for organic chromatographic analyses (GC, GC/MS, and HPLC).	See Table A7-1	Laboratory action taken per applicable SOP. TtNUS action taken per validation protocols and Section D1.4.
Temperature Blank	One blank per sample cooler.	4 ± 2 °C	Laboratory action taken per applicable SOP. TtNUS action taken per validation protocols and Section D1.4.
Trip Blank	One blank per sample cooler.	< RL	Laboratory action taken per applicable SOP. TtNUS action taken per validation protocols and Section D1.4.

1 Refer to Section A7.1.2 for the strategy for obtaining precision estimates for groundwater.
2 Matrix spikes and matrix spike duplicates are not analyzed in the field, but additional sample material must be collected in the field to ensure that the laboratory has enough material for spiking and duplicate analysis.

RL = Reporting Limit.
FOL = Field Operations Leader.
GC/MS = Gas chromatography/mass spectrometer.
HPLC = High-performance liquid chromatography.

A7.1.2 Field Precision Objectives

Field precision is assessed by collecting and measuring field duplicates at a rate of 1 duplicate per 10 environmental samples. Acceptance limits for field duplicate precision are provided in Table A7-1. This precision estimate encompasses the combined uncertainty associated with sample collection, homogenization, splitting, handling, laboratory and field storage, digestion, and analysis. In contrast, precision estimates obtained from analyzing duplicate laboratory samples incorporate only homogenization, subsampling, digestion, laboratory storage, and analysis uncertainties. Consequently, the field precision estimates [i.e., relative percent difference (RPD) values] should equal or exceed the laboratory precision estimates, on average, for each analyte. If field duplicate precision is significantly different from laboratory duplicate precision, the underlying cause will be investigated to determine whether the observed difference could be an artifact of sampling and analysis. Considerations given to this effort include:

- The scale of subsampling for laboratory precision estimates relative to the scale of field duplicate sample size.
- Analytical measurement precision.
- Precision for repeat analysis of the same laboratory control sample (LCS).

Precision estimates for replicate groundwater samples will be based on the first and last of the replicate samples collected from a randomly selected well. This strategy is designed to provide the greatest potential for identifying problems associated with field sampling and is explained further in Section B1.7.

A7.1.3 Laboratory Precision Objectives

Laboratory precision QC samples [i.e., matrix spike duplicates (MSDs) for organic chemicals] will be analyzed with a minimum frequency of 5 percent (i.e., 1 QC sample for 20 environmental samples). Laboratory precision is measured by comparing RPD values with precision control limits specified in Table A7-1.

A7.2 ACCURACY

A7.2.1 Definition

Accuracy is the degree of agreement between an observed value and an accepted reference value. This parameter is assessed by measuring spiked samples [e.g., surrogate spikes or matrix spikes (MSs)] or well-characterized samples of certified analyte concentrations (e.g., LCSs) and by measuring blanks.

Accuracy measurements are designed to detect biases resulting from the sample handling and analysis processes. The equations for determining accuracy of an individual MS and a surrogate spike or LCS for this project are provided in Section D1.1. The equations in Section D1.1 do not apply to blank samples, however, because division by zero (the expected amount or added amount) causes the calculated value to be infinite. Instead, method blank acceptance criteria specified in Table A7-2 are designed to limit the tolerable amount of contamination while recognizing that non-zero results for blanks are likely, if only because of random error in the measurement process. The bias computations for individual MSs, LCSs, and method blanks will be used to control the analysis process by triggering corrective actions as specified in Table A7-2.

A7.2.2 Field Accuracy Objectives

Accuracy requirements for field measurements are typically ensured through control over the sample collection and handling and through routine instrument calibration. In addition, after completing field measurements for specific conductance, pH, and turbidity, a check standard is analyzed to verify continued acceptable calibrations. The check standard acceptance criteria are as follows:

- pH: ±0.2 standard units
- Specific conductance: ±10% of the check standard value
- Turbidity: for check standards >5 NTU, ±10% of the check standard value; for all others, no check standard acceptance criteria apply
- Temperature: no check standard acceptance criteria apply

Accuracy is also typically monitored through the use of blanks to detect cross-contamination and by monitoring adherence to procedures that prevent sample contamination or degradation. Equipment rinsate blanks shall be collected for this investigation to assess cross-contamination via sample collection equipment. Trip blanks will be collected to monitor cross-contamination of VOC samples during shipping. Accuracy also shall be assured qualitatively through adherence to all sample handling, preservation, and holding time requirements.

A7.2.3 Laboratory Accuracy Objectives

Accuracy in the laboratory is measured through the comparison of a spiked sample or LCS result to a known or calculated value and is expressed as a percent recovery (%R). It is also assessed by monitoring the analytical recovery of select surrogate compounds added to samples that are analyzed by organic chromatographic methods. MS and surrogate compound analyses measure the combined accuracy effects of the sample matrix, sample preparation, and sample measurement. LCSs are used to assess the accuracy of laboratory operations with minimal sample matrix effects. Each spiked sample shall be spiked with all project target analytes for the analysis being performed to ensure that accuracy measures are obtained for each target analyte. Spiking concentrations shall equal or approximate the default concentrations detailed in the applicable sample preparation SOPs. LCS and MS analyses are performed at a frequency no less than 1 per 20 associated samples of like matrix. Laboratory accuracy is assessed via comparison of calculated %R values to accuracy control limits specified in Table A7-1.

A7.3 COMPLETENESS

A7.3.1 Definition

Completeness is a measure of the amount of usable, valid analytical data obtained compared to the amount expected to be obtained. Completeness is expressed as a percentage.

A7.3.2 Field Completeness Objectives

Field completeness is a measure of the amount of valid field measurements obtained from all the field measurements taken in the project. A completeness criterion of 100 percent applies to these measurements. Failure to obtain 100 percent of these measurements for field samples will indicate a need for corrective actions designed to recover the missing information. Failure to recover the information will constitute a need to resample unless the missing data are judged not to adversely affect attainment of project objectives.

Turbidity is a critical parameter that must be determined prior to sampling to establish attainment of equilibrium, and its completeness criterion is 100 percent. There are no completeness criteria for pH, specific conductance, and temperature, as these are non-critical parameters that are generally determined to verify that appropriate sampling conditions exist prior to sampling.

A7.3.3 Laboratory Completeness Objectives

Laboratory completeness is a measure of the amount of usable, valid laboratory measurements per matrix obtained for each of the target analytes. Usable, valid results are those that are judged, after data assessment, to represent the sampling populations and to have not been disqualified for use through data validation or data assessment.

Laboratory completeness objectives are 90 percent for each critical target analyte per sample matrix. Qualifications on the use of data caused by incomplete data sets will be documented in the FA report.

A7.4 REPRESENTATIVENESS

A7.4.1 Definition

Representativeness is an expression of the degree to which data accurately and precisely represent a characteristic of a population or environment condition existing at the site. Adherence to procedures described in Section B1 including standardized sampling, handling, preparation, analysis, and reporting requirements ensures that the final data accurately represent the desired populations. An assessment of representativeness will be made during data assessment to determine whether each datum belongs to the observed data distribution through outlier testing.

A7.4.2 Measures to Ensure Representativeness of Field Data

Representativeness depends on the proper design of the sampling program and will be satisfied by ensuring that proper sampling techniques are used (see Section B.1.3). Well stabilization parameters (See Table A6-1) will be monitored to ensure that groundwater wells have attained equilibrium prior to sampling.

A7.4.3 Measures to Ensure Representativeness of Laboratory Data

Representativeness in the laboratory is ensured by using the proper analytical procedures, meeting sample holding times, and analyzing and evaluating field duplicate samples relative to laboratory duplicates. During development of this QAPP, measures to ensure representativeness of the data generated included consideration of past operations, existing analytical data, physical setting, and monitoring well placement. The rationale for the sampling network is presented in detail in Section B1.1.

A7.5 COMPARABILITY

A7.5.1 Definition

Comparability is defined as the confidence with which one data set can be compared to another (e.g., between sampling points, between sampling events). Comparability is achieved by using standardized sampling and analysis methods and data reporting formats (including use of consistent units of measure) and by ensuring that reporting and detection limits are sufficiently low to satisfy project detection and quantitation criteria for the duration of the project. The RLs anticipated for this project are presented in Tables A6-2 and A6-3. Additionally, consideration was given to seasonal conditions and other environmental variations that could influence analytical results, but no such influences appear to exist for this investigation that would indicate a need to collect samples at times other than those planned for this investigation.

A7.5.2 Measures to Ensure Comparability of Field Data

Comparability depends upon the proper design of the sampling program and will be satisfied by ensuring that Section B1 of the QAPP is followed and that proper sampling techniques are used. The rationale behind the sample network design is found in Section B1.

A7.5.3 Measures to Ensure Comparability of Laboratory Data

Planned analytical data will be comparable when similar sampling and analytical methods are used and documented. Results will be reported in units that ensure comparability with previous data. The units used for the laboratory measurements are further explained in Section D2.1.2 of this QAPP.

A7.6 LEVEL OF QUALITY CONTROL EFFORT

Several QC samples will be analyzed for this project to provide a means to assess field and laboratory performance. Field QC samples consist of field duplicates, equipment rinsate blanks, trip blanks, and temperature blanks. These QC checks are described in Section B5.1. Each type of field QC sample undergoes the same preservation, analysis, and reporting procedures as the related environmental samples. Frequencies of field QC sample collection and analysis are presented in Table A7-2. The types and numbers of QC samples to be collected in the field are presented in Tables 4-11 and 5-4 of the RAMP.

Laboratory QC encompasses other checks performed during sample preparation and analysis, as described in Section B5.2. Frequencies for laboratory QC checks are provided in Table A7-2 and in the method-specific laboratory SOPs appended to this QAPP (Appendix A).

A8 SPECIAL TRAINING REQUIREMENTS

A8.1 FIELD PERSONNEL

All field personnel will have appropriate training to conduct the field activities to which they are assigned. Additionally, each site worker will be required to have completed a 40-hour course in Health and Safety Training as described under Occupational Safety and Health Administration (OSHA) 29 Code of Federal Regulations (CFR) 1910.120(b)(4).

A8.2 LABORATORY PERSONNEL

Laboratory personnel receive in-field and continuing raining as described in Appendix A, Section 2.6.

A9 DOCUMENTATION AND RECORDS

A9.1 DOCUMENTATION, RECORDS, AND DATA MANAGEMENT

This section describes how all project information will be managed, organized, and maintained for efficient use by project personnel. The information management process is outlined from the point of data generation to ultimate storage.

A9.1.1 Project Documentation and Records

A summary of NIROP records and documentation to be generated and stored in the TtNUS project files is provided in Table A9-1. Information to be maintained in the laboratory files is outlined in Section A9.1.3 of this QAPP.

A9.1.2 Field Analysis Data Package Deliverables

Field measurements will include those associated with the completion of purging and stabilization of monitoring wells and groundwater sampling and analysis. Field parameters including pH, specific conductance, turbidity, and temperature will be completed for aqueous phase samples using a water quality meter. These readings will be recorded on field sampling sheets, boring logs, or field logbooks.

A9.1.3 Fixed Laboratory Data Package Deliverables

A turn-around time of 28 days will be requested for all the data. Electronic data deliverables, formatted according to the requirements stated below, will be provided by the laboratories.

The following are required components of the hard copy data deliverables:

- Statement of completeness/accuracy
- Case Narrative
- External chains of custody documents and sample receipt information
- Internal chains of custody
- Summary Data forms (Form Is) showing final results for each sample
- System monitoring compound (surrogate) QC Summaries
- Matrix Spike/Matrix Spike Duplicate results
- Laboratory Control Sample/Laboratory Control Sample Duplicate results

- Method Blank Summaries
- Instrument performance check and internal standard area summaries
- Chromatograms
- Mass spectra
- Calibration data with retention times and responses of calibration standards
- Raw QC data and raw data for calibration and sample analyses
- Sample run log showing the analyses sequences
- Sample calculations
- Sample preparation data

Electronic data deliverables shall contain the following fields in a .dbf format:

- DATA FIELD
- SAMPLE_NO
- TRUNCATE
- LAB_ID
- LABORATORY
- BATCH_NO
- ASSOC_BLNK
- QC_TYPE
- SAMP_DATE
- REC_DATE
- EXTR_DATE
- ANAL_DATE
- RUN_NUMBER
- SDG
- DATA FIELD
- PROJECT_NO
- PROJ_MNGR
- PARAMETER
- CAS_NO
- FRACTION
- METHOD
- LAB_RESULT
- UNITS

- LAB_QUAL
- IDL
- MDL
- CRDL_CRQL
- DIL_FACTOR
- PCT_MOIST
- COMMENTS
- LAB_QUAL field

Raw chromatographic data, calibration data, laboratory QC data, and mass spectra are not required to be delivered in electronic format.

A9.1.4 Data Reporting Formats

Field data will be recorded in the field logbooks and field forms. All logbook and log sheet entries must be made in indelible ink (black pen is preferred). No erasures or liquid paper or white out are permitted. If an incorrect entry is made, the data will be crossed out with a single strike mark; initialed, and dated. The field personnel will sign and date the logbook pages and field forms. Examples of the forms to be used in the field are presented in Appendix D of the RAMP.

A9.1.5 Retention Time

All reports and records for NIROP Fridley will be retained for 10 years.

TABLE A9-1

PROJECT DOCUMENTATION AND RECORDS
NIROP FRIDLEY, MINNESOTA

Sample Collection Records	Fixed Laboratory Records	Data Assessment Records	Other
Field Logbooks	Sample receipt, custody and tracking records	Audit report and quality notices	All versions of QAPP
Sample Log Sheet-Soil	Standards traceability logs	Data validation report	Health and safety plan
Sample Log Sheet-"Low Flow" Groundwater	Equipment calibration logs		All versions of project reports
Boring Logs	Sample prep logs		
Well Construction Logs	Sample analysis logs		
Well Development Logs	Equipment maintenance and testing logs		
Chain-of-Custody Records	Corrective action forms		
Telephone Logs	Data results forms		
Field Modification Records	Reported results for standards, QC checks, and QC samples		
Field Instrument Calibration Logs	Instrument print-outs for samples and standards		
	Data verification check list		
	Sample disposal records		
	Telephone logs		

B1 SAMPLING PROCESS DESIGN

This section contains a description of the applicable environmental sampling networks as well as the strategies and rationales behind the sampling plan design. The mechanics of sample collection, packaging, shipping, and documentation are also described either explicitly or through citation of the RAMP.

Groundwater samples will be collected during the NIROP Fridley FA.

Site-specific health and safety concerns and processes used to govern the protection of worker health and safety are described in the HASP.

B1.1 SAMPLING DESIGN AND RATIONALE

Specific details regarding groundwater sampling and analysis and field operation are provided in Sections 4.0 and 5.0 of the RAMP. Laboratory methods are listed in Section B4.

B1.2 FIELD MOBILIZATION / DEMOBILIZATION

Following approval of the QAPP, Bay West will begin mobilization activities. All field team members will review the QAPP (including the HASP) prior to mobilization to become familiar with the scope of the field activities and the following:

- Identification of the QAPP, including the HASP and applicable field SOPs
- Site-specific safety concerns and requirements
- Project objectives
- Sampling design and strategies for groundwater
- Site-specific particulars of field operations (e.g., locations of utilities, physical access to sampling locations, communication mechanisms, lines of authority and responsibility, scheduling requirements, sample shipping concerns, etc.)

The Bay West FOL will coordinate the mobilization activities for this project.

B1.3 SAMPLE COLLECTION

The specifics concerning proposed sampling locations, sampling procedures, planned analyses, and field operations that are to be followed as part of sample acquisition are covered in Sections 4.0 and 5.0 of the RAMP. Target analytes are listed in Table A6-2 and A6-3. The chemical analysis summary, including the number of samples to be collected, is shown in Tables 4-11 and 5-4 of the RAMP. The summary of sample analyses, bottle requirements, preservation requirements, and holding time requirements is listed in Tables 4-7 and 5-3 of the RAMP.

B1.4 SAMPLE IDENTIFICATION SYSTEM

All samples will be properly labeled with a sample label affixed on the sample container and a sample tag secured around the neck of the sample container. The sample labels and sample tags will include the following information: project name, sample tracking number, sampling date, laboratory analyses requested, matrix type, preservative and sampler's initials.

Each sample collected will be assigned a unique sample tracking number or identification as per Sections 4.3.5 and 5.3.3.1 of the RAMP. The sample tracking number is a multi-segment, alpha-numeric code that identifies the site, type of sample, and sample location. Any other pertinent information regarding sample identification will be recorded in the field logbooks and/or on sample logsheets. Examples of the sample tracking numbers to be used for groundwater sampling are provided in Section 4.3.5.1 of the RAMP.

MS and laboratory duplicate samples will be designated on the field documentation forms and sample labels.

B1.5 SAMPLE HANDLING, PRESERVATION, AND SHIPPING

Sample handling includes the field-related considerations connected with selecting sample containers, preservatives, allowable holding times, and analyses requested. Samples may be unstable and therefore require preservation to prevent changes in either the concentration or the physical condition of the constituent(s) requiring analysis. Preservation requirements for each of the chemicals of interest are provided in Tables 4-7 and 5-3 of the RAMP.

Samples must be shipped to the En Chem facility located at:

Karri Warnock
1241 Bellevue Street
Green Bay, WI 54302
Tel. No. (920) 469-2436

The following procedures will be followed when shipping samples for laboratory analysis:

- All samples will be promptly chilled with ice to 3°Celsius ± 3°Celsius and packaged in an insulated cooler for transport. Each cooler shipped to the laboratory will include a temperature blank. Ice will be sealed in containers to prevent water leakage. Samples will not be frozen. Each sample container will be placed in a Ziplock™ bag to prevent contamination. The Ziplock™ bag will be placed in a bubble-wrap sleeve to protect against breakage. The temperature of the cooler will be measured using the temperature blank and then recorded in the appropriate section of the COC form.

- Only shipping containers that meet all applicable state and federal standards for safe shipment will be used.

- Shipping containers will be sealed with nylon strapping tape in at least two places, and custody seals will be signed, dated, and affixed in a manner that will allow the receiver to quickly identify any tampering that may have occurred during transport to the laboratory.

- The field COC document will be taped to the top inside cover of the shipping container in a sealed plastic envelope.

- Shipment will be made by a public courier at the next scheduled pickup following completion of sample collection.

Sections 4.3.5 and 4.3.6 of the RAMP provide detailed descriptions of sample handling, packaging, and shipping procedures required for this project. The FOL will be responsible for insuring the completion of the following forms:

- Sample labels
- COC forms
- Custody seals for coolers

- Shipping labels for coolers
- Express mail air bills

B1.6 SAMPLE CUSTODY

Custody of samples must be maintained and documented at all times beginning with the collection of samples in the field. Sample custody procedures are addressed in Section B3.

B1.7 QUALITY CONTROL SAMPLES

This section focuses on field QC samples that will be collected as part of this environmental investigation. Field QC samples include field duplicates, equipment rinsate blanks, and trip blanks. Tables 4-11 and 5-4 of the RAMP presents the types and numbers of required field QC samples. Section B5.1 provides definitions and details for these and all other QC checks to be used during this investigation. Field QC sample requirements for field duplicates and equipment rinsate blanks required for this project are as follows:

Field Duplicates The field duplicate QC sample requirement for this project will be met as follows:

If monitoring well equilibrium has been attained prior to groundwater sampling, all replicate samples within a well should represent the same analyte concentrations. If the samples are not equally representative, it is reasonable to expect that the first and last samples removed from a well will be the most different in analyte concentration. Therefore, field duplicate groundwater samples for QA/QC purposes will be the first and last sample removed from a randomly-selected well after field monitoring has shown that sampling conditions are stable.

Equipment Rinsate Blanks Equipment rinsate blanks will be obtained under representative field conditions by running analyte-free water through sample collection equipment after decontamination and placing it in the appropriate sample containers for analysis. Equipment rinsate blanks will be collected for non-dedicated equipment for all sampling rounds. Decontamination procedures for non-dedicated equipment will be conducted and are provided in 4.3.1.4 of the RAMP.

Trip Blanks Trip blanks will be supplied by the analytical laboratory. Trip blanks are samples of organic-free water that are prepared by the laboratory and accompany each cooler containing VOC samples.

B1.8 SURVEYING

Existing survey data will be used to locate the horizontal and vertical locations of all sampling points.

B1.9 INVESTIGATION DERIVED WASTE

It is anticipated that this investigation will generate three types of potentially contaminated residues or investigation derived waste (IDW):

- Personal protective equipment (PPE)
- Well development and purge fluids
- Equipment decontamination fluids

IDW will be handled as follows:

PPE All PPE will be double bagged and disposed of appropriately.

Well Development and Purge Fluids The well development and purge fluids generated during this investigation are not expected to represent a significant risk to human health or the environment if properly managed. All well development and purge water will be disposed by pumping into the GWTF pump-house located on Navy property.

Equipment Decontamination Fluids All decontamination fluids will be combined with well development and purge fluids when possible and handled in the same manner.

Tubing Used for Development, Purging, or Sampling All tubing used to develop, purge, or sample a well will be double bagged and disposed of appropriately.

B1.10 RECORD KEEPING

In addition to the COC record, certain standard forms will be completed for sample description and documentation. These forms shall include sample log sheets, daily activity records, and logbooks. A bound, weatherproof notebook shall be maintained by the FOL. All information related to sampling or field activities will be recorded in the field notebook. This information will include, but is not limited to, sampling times, weather conditions, unusual events, field measurements, and descriptions of photographs, names of people on-site, visitors, calibration information for field instruments, corrective actions, and sampling points.

A bound, weatherproof logbook shall be maintained by the FOL. This book will contain a summary of each day's activities and will reference the field notebook when applicable. At the completion of field activities, the FOL shall submit to the Navy all field records, data, field notebook, logbook, COC records, sample log sheets, and daily activity logs.

B2 SAMPLING METHODS REQUIREMENTS

Requirements for the collection of field measurements are presented in this section.

B2.1 FIELD MEASUREMENT PROCEDURES

Chemical/physical parameters to be measured using field instrumentation include pH, specific conductance, temperature, and turbidity. The field target parameters are presented in Table A6-1. Measurement of field parameters will be conducted using a YSI-650MDS;6820 SONDE. The YSI is used to measure pH, temperature, turbidity, DO, ORP, and conductivity. For most parameters, the product manual specifies weekly calibration. For some parameters, the manual specifies daily calibration. For the NIROP project, Bay West has historically done daily calibration for all parameters. Calibration is completed in accordance with manufacturer's specifications and the procedures described in Section B7.1. Preventative maintenance of field instrumentation is discussed in Section B6.1.

B3 SAMPLE HANDLING AND CUSTODY REQUIREMENTS

Documented sample custody is one of several factors that are necessary for the admissibility of environmental data as evidence in a court of law. Custody procedures help to satisfy the two major requirements for admissibility: relevance and authenticity. Sample custody is addressed in three parts: field sample location and collection, laboratory analysis, and final evidence files. Final evidence files, including all original laboratory reports and purge files, are maintained under document control in a secure area. A sample or evidence file is under custody when any one of the following conditions is satisfied.

- The item is in the actual physical possession of an authorized person.
- The item is in view of the person after being in his or her possession.
- The item was placed in a secure area to prevent tampering.
- The item is in a designated and identified secure area with access restricted to authorized personnel only.

The COC report is a multi-part, standardized form used to summarize and document pertinent sample information such as sample identification and type, sample matrix, date and time of collection, preservation, and requested analyses. Furthermore, through the sequential signature of various sample custodians (e.g., sampler, airbill number, laboratory sample custodian), the COC report documents sample custody and tracking. Laboratory custody procedures will ensure that sample integrity is not compromised from the time of receipt at the laboratory until final data are reported to TtNUS. This requires that the laboratory control all sample handling and storage conditions and circumstances. Custody procedures apply to all environmental and associated field QC samples obtained as part of the data collection system.

B3.1 FIELD CUSTODY PROCEDURES

The FOL (or designee) is responsible for the care and custody of the samples collected until they are relinquished to the laboratory or entrusted to a commercial courier. COC forms are completed to the fullest extent possible for each sample cooler used for shipment. The forms are legibly completed with waterproof ink and are signed and dated by the sampler. COC forms will include the following information: project name, sample number, time collected, matrix, designated analysis, type of sample, preservative, and name of sampler. Pertinent notes or comments are also indicated on the COC form.

Information similar to that contained on the COC form is provided on the sample label that is securely attached to the sample bottle. In addition, sample tags will be affixed to the sample bottles and returned by the analytical laboratory for inclusion in the final evidence file. Sample labels and tags will include, at a minimum, the following information: sample number, date and time of collection, analysis required for the sample aliquot in the associated sample container, and a space for the laboratory sample number. The procedures for sample numbering are described in Section 4.3.5.1 of the RAMP.

Site conditions during sampling and the care with which samples are handled may factor into the degree to which samples represent the media from which they are collected. This, in turn, could affect the ability of decision makers to make accurate and timely decisions concerning the contamination status of the site. As appropriate, logbooks are assigned to and maintained by key field team personnel. The logbooks are used to record daily conditions/activities such as weather conditions, dates/times of significant events, level of PPE used, actual sample collection locations, photographs taken, problems encountered during field activities and corrective actions taken to overcome problems. In addition, the names of site visitors and the purposes of their visits shall be recorded. Field logbook assignments shall be recorded in the Site Logbook or other central file whose location is known by the FOL. Together, field logbooks and sample documentation including COC forms provide a record that should allow a technically qualified individual to reconstruct significant field activities. The FOL is responsible for the maintenance and security of all field records at the end of each workday during field activities. At the completion of field activities, the FOL will forward all field records to the Navy. All sample records are eventually docketed into the final evidence file.

Section 4.3.6 of the RAMP describes procedures for groundwater sample packaging and shipment. A temperature blank shall be included in each cooler containing groundwater samples for VOC analysis for use by the laboratory upon receipt. A trip blank shall be included in each cooler containing VOC samples. Each cooler shall be taped shut with strapping tape in at least two places to prevent tampering. Custody seals shall be attached so that the seals must be broken to open the cooler. Shipment will be made by a public courier at the next scheduled pickup following completion of the sample collection.

The following procedures will be used when transferring custody of samples. As previously noted, individual custody records will accompany each sample cooler. The methods of shipment, courier name, and other pertinent information will be entered in the remarks section of the custody record. When transferring samples, the individuals relinquishing and receiving the samples will sign, date, and note the time on the COC record. The original record (top copy of the multi-part form) will accompany the shipment, and the field sampler will retain a copy. This record documents the sample custody transfer from the sampler to the laboratory, often through another person or agency (common courier). After COC

records have been placed within sealed shipping coolers, the signed courier airbills will serve to document COC. Upon arrival at the laboratory, internal laboratory sample custody procedures will be followed (see Section B3.2). Additional field custody procedures are presented in the SOPs found in Appendix B.

B3.2 LABORATORY CUSTODY PROCEDURES

When En Chem receives a shipment of samples, the laboratory's sample custodian will verify that the correct number of coolers has been received. The custodian will examine each cooler's custody seals to verify that they are intact and that the integrity of the environmental samples has been maintained. The custodian will then open each cooler and measure its internal temperature by measuring the temperature of the temperature blank. The temperature reading will be documented in the comments column of the COC form. The sample custodian will then sign the COC form and examine the contents of the cooler. Identification of broken sample containers or discrepancies between the COC form and sample labels will be recorded. The laboratory will retain the original field COC forms, providing copies of the forms with the final data package deliverable. All problems or discrepancies noted during this process will be promptly reported to the Navy. Samples will be logged into the laboratory information management system. Additional information regarding laboratory custody procedures can be found in Section 5.0 of the laboratory QA Manual in Appendix A.

B3.3 FINAL EVIDENCE FILES

The Administrative Record at NIROP Fridley will be the repository for all documents that constitute evidence relevant to sampling and analysis activities as described in this QAPP. NIROP Fridley will be the custodian of the evidence file and will maintain the contents of these files, including all relevant records, reports, logs, field notebooks, pictures, subcontractor reports, and data reviews in a secure, limited access location and under custody of the NIROP Fridley Site Manager. The control file will include at a minimum:

- Field logbooks
- Field data and data deliverables
- Photographs and negatives
- Drawings
- Soil boring logs
- Laboratory data deliverables
- Data validation reports
- Data assessment reports

- Progress reports, QA reports, interim project reports, etc.
- All custody documentation (tags, forms, airbills, etc.)

Upon completion of the contract, all files associated with this investigation will be maintained in the Administrative Record at NIROP Fridley and will be available for inspection by the regulatory agencies for at least 10 years. Prior to disposal of all administrative records, the records will be offered to the USEPA.

B4 ANALYTICAL METHODS REQUIREMENTS

Analytical procedures are presented in this section.

B4.1 LABORATORY ANALYTICAL AND MEASUREMENT PROCEDURES

Table B4-1 provides a summary of the laboratory analytical methods and associated laboratory SOPs to be used during this investigation. The laboratory SOPs are included in Appendix A of this QAPP.

B4.1.1 List of Project Target Compounds and Detection Limits

A list of the laboratory target analytes, project-specific target levels, and laboratory-specific method detection limits (MDLs) and RLs is provided in Tables A6-2 and A6-3. The MDLs shown have been determined experimentally using procedures based on the method provided in 40 CFR Part 136 Appendix B (U.S. EPA, 1984). All environmental data will be reported to the analyte's laboratory-specific RL. An analyte's RL is based on the associated MDL with adjustments made to ensure that the precision and accuracy requirements of the method are attainable. RLs will be adjusted on a sample-by-sample basis, as necessary, based on dilutions and sample volume.

B4.1.2 List of Associated Quality Control Samples

Field and laboratory QC samples to be analyzed in support of this project are identified in Section B5. The analytical SOPs included in Appendix A of the QAPP address minimum QC requirements for each associated analytical method including calibration QC requirements. Details on QC sample usage are provided in Section B5.

TABLE B4-1

SUMMARY OF AQUEOUS SAMPLES ANALYTICAL PROCEDURES NIROP FRIDLEY, MINNESOTA

Analytical Parameter	Preparation Method	Analytical Method	Preparation/Analytical SOP[1]
VOCs	SW-846[2] 5030B	SW-846 8260B	VOA-5

1 Laboratory SOPs are included in Appendix A of this QAPP.
2 USEPA, 1997b.

B5 QUALITY CONTROL REQUIREMENTS

Field and laboratory QC samples will be analyzed routinely to evaluate overall data quality. This section provides information regarding those internal QC checks. Laboratory QC samples are addressed in Section A7 and B5.2 of the QAPP. Section B7 addresses instrument calibrations; Section B5.2 addresses non-calibration analytical QC. Table A7-2 summarizes the routine field and laboratory non-calibration QC sample analysis frequencies and associated corrective actions.

B5.1 FIELD QUALITY CONTROL CHECKS

TtNUS has established a QC program that is designated to monitor and assess the quality of field work performed during environmental investigations. That program includes the use of various types of QC samples as indicated in Table A7-2. Some of the samples in Table A7-2 are identified as requiring additional sample material to be collected in the field even though the actual field QC check is performed in the laboratory.

The field QC samples consist of field duplicates, equipment rinsate blanks, temperature blanks, and trip blanks. Temperature blanks will be included in each cooler submitted to the laboratory to monitor sample storage conditions prior to arrival at the laboratory. Trip blanks will be included in each sample cooler containing VOC samples. With the exception of temperature blanks, each type of field QC sample undergoes the same preservation, analysis, and reporting procedures as the related environmental samples. The types of field QC samples to be used for this project are described in detail in Sections B5.1.1 through B5.1.4. Target precision and accuracy values, as applicable, for field QC samples are presented in Table A7-2.

B5.1.1 Field Duplicates

Field duplicates will be collected and analyzed for chemical constituents to measure the cumulative uncertainty (i.e., precision) of the sample collection, splitting, handling, storage, preparation and analysis operations, as well as natural sample heterogeneity. For groundwater sampling, field duplicates may be generated by collecting individual water samples from the same well as the first and last sample removed rather than by rapid succession. Field duplicates are labeled as individual environmental samples and are not identified to the laboratory as duplicate samples.

B5.1.2 Rinsate Blanks

Equipment rinsate blanks or rinsate blanks are obtained under representative field conditions by collecting the rinse water generated by running analyte-free water through sample collection equipment after sampling and decontamination and prior to use. These blanks will be collected to indicate the potential for sample cross-contamination through the use of improperly cleaned sampling equipment.

B5.1.3 Trip Blanks

Trip blanks are samples of analyte-free water that measure cross-contamination of VOC samples during transport. The trip blank is prepared by the laboratory and must accompany each sample cooler used to transport VOC samples. The trip blank is not to be opened in the field.

B5.1.4 Temperature Blanks

Temperature blanks are vials of water inserted into each sample cooler prior to shipment to the field. The temperature of the temperature blank is measured prior to shipment and upon receipt at the laboratory to assess whether samples were properly cooled during transit.

B5.2 LABORATORY QUALITY CONTROL CHECKS

En Chem operates a QC program that ensures the reliability and validity of the analyses performed at the laboratory. The laboratory's QA Plan describes the policies, organization, objectives, QC activities, and specific QA functions employed by the laboratory. All analytical procedures are documented in writing as SOPs. Each analytical SOP specifies minimum QC requirements for the procedure. As previously noted, SOPs for all analyses to be performed during this investigation are included in Appendix A of this QAPP. Table B4-1 provides a list of the SOPs associated with each analytical procedure. In addition, the laboratory maintains SOPs regarding general laboratory QA operations. Several of these SOPs, as applicable, are also included in Appendix A. The Table of Contents included in Appendix A provides a list of laboratory SOP titles and associated SOP numbers for all SOPs contained in the appendix.

Internal laboratory analytical QC requirements beyond those used for instrument calibration QC are highlighted in the remainder of this section. Additional QC requirements, which are specific to the Naval Facilities Engineering Service Center (NFESC) Laboratory QA Guide (NFESC, 1996), and are therefore requirements for this project, are also specified, as applicable, for each of the QC checks. Target precision and accuracy values (control limits) are presented in Table A7-1. The applicable analytical SOPs include a discussion of calibration QC measures.

B5.2.1 Laboratory Control Samples

LCSs provide a means to monitor the overall performance of each step during the analysis, including the sample preparation. These are blank spikes (water analyses) that contain concentrations of analytes that are known with a specified degree of certainty.

Based on the requirements of the NFESC QA Program, LCSs for multiple-analyte organic methods must contain at least two targeted analytes from each major class of compounds subject to analysis. For this project, the laboratory will spike as many target analytes that is reasonable based on the laboratory's past experience with chromatographic co-elution and interference from surrogate compounds and internal standard compounds in groundwater. Performance requirements for target analytes other than those listed in Table A7-1 shall comply with internal laboratory control requirements.

Based on NFESC QA Program requirements, if recovery of a LCS falls outside the control limits (See Table A7-1), the laboratory will reject the data for the analytical batch and take corrective action. The associated samples, extracts, or digestates may be reanalyzed a single time, and if the LCS recoveries meet acceptance criteria, the data will be reported. If LCS analyte recovery is still outside the acceptance limits, the associated samples in the preparation batch will be reprocessed if sufficient sample is available and holding times have not lapsed. If re-preparation or re-analysis is not possible, the data will be flagged and the sample delivery group (SDG) narrative will include details of the failed LCS.

B5.2.2 Laboratory Duplicates (Except VOC)

Laboratory duplicates are two subsamples obtained by the laboratory analyst after mixing the sample. If RPD values exceed QC limits for laboratory duplicates (Table A7-1), the analytical process will be investigated to assess whether the observed RPD value is an indication of a deficient analytical system or an indication of excess sample heterogeneity.

B5.2.3 Internal Standards

Internal standards are added to each sample analyzed by gas chromatography/mass spectrometer (GC/MS) to ensure that the analysis sensitivity and response are stable during every analytical run. Internal standard area counts for samples and blanks must not vary by more than a factor of two (-50 percent to +100 percent) from the associated 12-hour calibration standard.

B5.2.4 Laboratory Method Blanks

Laboratory method blanks or preparation blanks are an analyte-free matrix prepared and analyzed in accordance with the analytical method employed to determine whether contaminants originating from laboratory sources have been introduced and have affected environmental sample analyses. Analyte-free water is used as a blank for water analyses.

Laboratory method blanks acceptance criteria and corrective actions for non-compliant results are described in detail in the applicable analytical SOP included in Appendix A. Under no circumstances are laboratory method blank contaminant values subtracted from environmental sample analysis results.

B5.2.5 Matrix Spikes

Matrix spikes are environmental samples to which known quantities of analytes are added prior to sample digestion. These samples provide information about the heterogeneity of the samples as well as the effect of the sample matrix on the sample digestion and measurement methodology.

Matrix spikes, to conform with NFESC requirements, will contain all targeted analytes of interest. If the MS recovery in not within applicable control limits, the laboratory will assess the batch to determine whether the spike results are attributable to a matrix effect or are the result of other problems in the analytical process. Based on NFESC requirements, if all the batch QC elements that are not affected by the sample matrix are in control (e.g., method blank, LCS, calibration checks) and if there is no evidence that spiking was not properly performed, the poor spike recovery may be attributed to matrix effects. In this case, the associated data will be flagged, but re-preparation and re-analysis will not be required. If any of the batch QC elements that are not affected by the sample matrix are out of control, or if there is any evidence that spiking may have been improperly performed, the MS sample will be re-processed through the entire analytical sequence. If there is insufficient sample available, or if holding times have passed, the laboratory will flag the associated data. Details of noncompliant and laboratory duplicate results will be included in the SDG narrative.

B5.2.6 Matrix Spike Duplicates

MSDs are duplicates of matrix spikes and are used for estimating the precision of organic target analyte analyses. They are used in lieu of simple duplicate samples because native environmental samples frequently do not exhibit detectable levels of organic target analytes, which otherwise prevents the calculation of RPD values.

B5.2.7 Surrogates

Surrogates are organic compounds (typically brominated, fluorinated, or isotopically labeled) that are similar in nature to the compounds of concern and are not likely to be present in environmental media. They are spiked into each sample, standard, and method blank before analysis and are used in organic chromatographic analysis procedures as a check of method effectiveness. Corrective actions for noncompliant surrogate recoveries are presented in the relevant determinative SOPs included in Appendix A of this QAPP. Details of noncompliant surrogate recoveries will be included in the SDG narrative.

B5.2.8 Additional Laboratory Quality Control Checks

An additional internal laboratory QC check is mass tuning for GC/MS analysis and other analysis-specific QC measures. Specific requirements for this QC check are provided in the applicable SOPs included in Appendix A of this QAPP.

B6 EQUIPMENT TESTING, INSPECTION, AND MAINTENANCE REQUIREMENTS

Equipment used to collect samples will be maintained in accordance with the manufacturers' operation and maintenance manuals. Equipment and instruments will be calibrated in accordance with the procedures and at the frequency presented in Section B7 (Instrument Calibration and Frequency). Preventative maintenance for field and laboratory equipment is addressed in the remainder of this section.

B6.1 FIELD EQUIPMENT PREVENTATIVE MAINTENANCE

The equipment manager and the equipment operator will be responsible for ensuring that equipment is operating prior to use and that routine maintenance is performed and documented. Field measurements of pH, specific conductance, temperature, and turbidity in groundwater will be taken using an electronic instrument. Maintenance procedures to be performed on the instrument are in accordance with the manufacturer's instructions on preventative maintenance. Any problems encountered while operating the instrument will be recorded in the field logbook, including a description of the symptoms and corrective actions taken. If problems with the equipment are detected and service is required, the equipment will be logged, tagged, and segregated from equipment in proper working order. Use of the equipment will not resume until the problem is corrected.

B6.2 LABORATORY INSTRUMENT PREVENTIVE MAINTENANCE

Proper maintenance of laboratory instruments and equipment is essential. Depending on manufacturers' recommendations, maintenance intervals are established for each instrument. All instruments will be labeled with a model number and serial number, and a maintenance logbook will be maintained for each instrument. Personnel must be alert to the maintenance status of the equipment they are using at all times. Table B6-1 provides a summary of preventive maintenance procedures performed by En Chem for key analytical instruments and equipment associated with this project. Additional information regarding laboratory instrument preventative maintenance can be found in Section 11.0 of the laboratory QA Manual in Appendix A.

The use of manufacturer-recommended grades or better of supporting supplies and reagents is also a form of preventive maintenance. For example, gases used in the Inductively Coupled Plasma (ICP) instruments are of sufficient grade to minimize fouling of the instrument. The routine use of other supporting supplies from a reputable manufacturer will assist in averting unnecessary periods of

TABLE B6-1

PREVENTIVE MAINTENANCE FOR EN CHEM LABORATORIES ANALYTICAL AND SUPPORT INSTRUMENTS NIROP FRIDLEY, MINNESOTA

Instrument	Preventive Maintenance	Maintenance Frequency
GC/MS	Change injection port liner and septum, clip 5 to10 cm from front of pre-column, ramp GC oven twice to 310 °C.	Daily or as needed
	Clean source, install new guard column, clean or replace tubing, replace bottom seal in injection port, replace o-ring in injection port.	As needed
	Change carrier gas and gas filters	As prescribed by instrument manufacturer
	Change/clean purge apparatus and trap	As needed or when sensitivity is poor
	Leak check septum and check gas flow	As needed or when a leak is suspected
Refrigerators	Monitor temperature.	Daily
Ovens	Monitor temperature.	Daily
Balances	Certify Class S weights. Routine service by outside party.	Annually Annually
Thermometers	Calibrate against NIST thermometer. Recertify NIST thermometer.	Annually Annually
Micropipets	Check gravimetrically. Clean o-rings.	Monthly As needed

GC/MS = Gas chromatography/mass spectrometer.
ICP = Inductively Coupled Plasma.
AES = Atomic Emission Spectrum.

instrument downtime. An inventory of critical spare parts will also be maintained by the laboratory to minimize instrument downtime.

B6.3 INSPECTION / ACCEPTANCE REQUIREMENTS FOR SUPPLIES AND CONSUMABLES

All field equipment shall be inspected prior to use to ensure that necessary parts are available. Most equipment planned for use in this project is simple with few to no moving parts. Therefore, a visual inspection prior to use shall be sufficient to ensure that the equipment is suitable for use. This visual inspection shall occur during mobilization and during each use by the person using the equipment. Chemical standards used in the field shall be inspected prior to use to ensure that they are of acceptable quality. The standards shall be of reagent grade or, if purity is specified in the applicable SOP, they shall meet the purity specified in the SOP.

Laboratory inspection and acceptance requirements include:

- Following of individual SOP specifications for grades of chemicals necessary to achieve acceptable analytical performance. SOPs are required to detail the necessary grade of chemicals, including compressed gases.

- Obtaining primary chemical standards from reliable sources that use calibrated glassware in the preparation of the standards and maintaining all certificates supplied with the standards. Emphasis is on obtaining National Institute of Standards and Technology (NIST)-traceable standards where possible.

- Storage of chemical standards in accordance with applicable SOPs and in a manner that preserves their integrity.

- Routine monitoring of de-ionized water and other solvents to ensure that analytical systems, samples, and standards are not contaminated.

- Recording of the date received and the date opened for each container of chemical used for analysis.

B6.4 REFRIGERATORS/OVENS

The temperatures of refrigerators used for sample storage will be monitored once daily. The acceptable range for refrigerator temperatures is 4°Celsius ±2°Celsius. The temperatures will be recorded on a

Temperature Log. Maintenance of the log will be the responsibility of the sample custodian. The log will contain the following information:

- Date
- Time
- Temperature
- Initials of the person performing the check

Assignment of responsibilities for temperature monitoring to specific personnel does not preclude the participation of other laboratory personnel. If unusual temperature fluctuations are noted, it is the responsibility of the observer to immediately notify the person in charge of the discrepancy before the condition of the samples is compromised.

Unstable or fluctuating temperatures may be indicative of malfunctions in the cooling system. On the other hand, the instability may be due to frequent opening of the door. Regardless of the cause, such an observation must be investigated, and modifications must be made to access procedures, or repairs to equipment must be made, to prevent jeopardizing the integrity of the samples.

Oven temperatures are checked prior to use. The required temperature is dependent on the method to be performed. The oven temperature is recorded with the associated analytical results in a logbook designated for the analytical method.

B7 INSTRUMENT CALIBRATION AND FREQUENCY

All instrumentation used to perform chemical measurements must be properly calibrated prior to use in order to obtain valid and usable results. Instruments used in the field and in the laboratory will be calibrated according to the procedures governing the use of the instruments. Laboratory SOPs are included in Appendix A. For this investigation, field instrument calibration is described in Section B7.1 and laboratory instrument calibration is outlined in Section B7.2.

B7.1 FIELD INSTRUMENT CALIBRATION

Several monitoring instruments will be used during field activities, including the following:

- Electronic water level meter
- Water quality meter (combination temperature probe, specific conductance meter, pH meter, and turbidity meter)

The electronic water level meters (M-scopes or equivalent) will be calibrated prior to field use and periodically at the discretion of the FOL. They will be calibrated by comparison of M-scope markings with a steel tape measure.

Calibration of the water quality meter (YSI-650MDS; 6820 SONDE) will be performed according to manufacturer's instructions. Except for temperature, all of the water quality parameters to be tested at NIROP require calibration. Listed below are calibration steps for each parameter.

Conductivity

1. From the 2-Calibrate menu off of the Main menu, select number 1-Conductivity.
2. Choose calibration by specific conductance (calibration by conductivity or salinity is also offered but specific conductance is recommended).
3. Enter the value of the standard used during calibration and press Enter.
4. Follow the stabilization of readings and confirm the calibration when the readings are stable by pressing Enter.
5. As instructed, press Enter again to return to Calibrate menu.

Dissolved Oxygen

1. From the 2-Calibrate menu off of the Main menu, select number 2-Dissovled Oxy.

2. Choose calibration by percent saturation or mg/L (calibration by percent saturation in water-saturated air in normally recommended).
3. For the percent saturation calibration mode, be certain that the sensor has been thermally equilibrated in water-saturated air, the sensor has been stabilized, and the pressure in the cup has been relieved. Enter the local barometric pressure in mm Hg and press Enter. Monitor the DO readings and press Enter when no changes have occurred for approximately 30 seconds. Go to Step 5.
4. For the mg/L mode, calibration is carried out in a water sample which has a known concentration of dissolved oxygen. Immerse sensor in water. After thermal equilibrium, enter the known mg/L value and press Enter. Monitor the DO readings and press Enter when no changes have occurred for approximately 30 seconds.
5. As instructed, press Enter again to return to the Calibrate menu.

pH

1. From the 2-Calibrate menu off of the Main menu, select number 4-ISE1-pH.
2. Choose 1-point, 2-point, or 3-point calibrations.
3. Immerse in one of the buffers and enter the actual pH value and press Enter.
4. Follow the stabilization of readings and confirm the calibration when the readings are stable by pressing Enter.
5. Repeat Steps 3-4 based on the number of buffer solutions chosen (2 or 3).
6. As instructed, press Enter again to return to Calibrate menu.

Turbidity

1. From the 2-Calibrate menu off of the Main menu, select number 9-Turbidity.
2. Choose 1-point, 2-point, or 3-point calibrations.
3. Place the instrument in clear water with no suspended solids and input 0 NTU at the screen prompt and press Enter.
4. Follow the stabilization of readings and confirm the calibration when the readings are stable by pressing Enter.
5. Repeat Steps 3-4 based on the number of solutions chosen (2 or 3).
6. As instructed, press Enter again to return to Calibrate menu.

All calibrations will be documented on an Equipment Calibration Log. During calibration, an appropriate maintenance check will be performed on each piece of equipment. If damaged or defective parts are identified during the maintenance check and it is determined that the damage could have an impact on

the instrument's performance, the instrument will be removed from service until the defective parts are repaired or replaced.

B7.2 LABORATORY INSTRUMENT CALIBRATION

Organic chemical analyses begin with an initial calibration of the GC/MS system with an initial calibration curve that establishes the instrument responses as functions of analyte concentration. Calibration standards include target analytes and any applicable internal standards or surrogate compounds. On a routine basis, a continuing calibration is performed in which the validity of the calibration curve is checked with a known chemical standard of a source independent of the initial calibration standards. This continuing calibration standard contains the target analytes of interest and applicable internal standards and surrogate compounds. The internal standards compensate for variations in analytical response that may occur in individual chromatographic analyses. The surrogate compounds provide a means to assess the efficiency of analyte extraction and analysis for each sample.

All standards used to calibrate analytical instruments must be obtained from the NIST or through a reliable commercial supplier with a proven record for quality standards. All commercially supplied standards will be traceable to NIST reference standards, where possible, and appropriate pedigree documentation will be obtained from the supplier. In cases where documentation is not available, the laboratory will analyze the standard and compare the results to a USEPA-known or previous NIST-traceable standard.

Calibrations and associated documentation are required for all laboratory instruments. The documentation for calibrations performed in-house shall identify the person performing the calibration, the instrument being calibrated, the standards used for calibration and their concentration values or other pertinent calibration values, the source of the calibration standards, and the date of calibration. Certain instruments (e.g., balances) may be calibrated by a third party. In those cases, the details of calibration as described above and a certification of acceptable performance shall be obtained from the third party. The period during which the calibration is valid may appear in the calibration record or may be governed by a SOP.

Calibration procedures, frequency requirements, acceptance criteria, and conditions that require recalibration are described for each analytical procedure in the applicable laboratory SOPs included in Appendix A. The laboratory must maintain calibration data with data packages so that recovery of calibrations and verification of analyte concentrations can be made. Table C of each laboratory analyhtical method SOP indicates the analytical instrument in use. Section 10.0 - Calibration and

Standardization of each SOP indicates calibration procedures, including VOC acceptance calculations in the G3-VOA-01 SOP.

B8 DATA MANAGEMENT

The data review process is performed in two phases. The initial phase, contract compliance screening, consists of inspecting the laboratory data deliverables to determine if the contract requirements were met. The second phase, data validation, includes a review of data results to assess data usability and application of data qualifiers to the analytical results based on adherence to method protocols and laboratory-specific QA/QC limits. Method SW8260B will undergo data validation.

B8.1 CONTRACT COMPLIANCE SCREENING

Contract compliance screening, performed by TtNUS, is the review of sample data deliverables for completeness and compliance with project requirements. Completeness is evaluated by ensuring that all required data deliverables are received in a legible format with all required information. The contract compliance screening process also includes a review of the COC forms, case narratives, and project reporting limits. Sample resubmission requests, documentation of nonconformances with respect to data deliverable completeness, and corrective actions often are initiated during the contract compliance screening review. The outputs from this process will be combined with the data validation outputs in a summary of compliances and non-compliances with laboratory subcontracts and validation criteria. Data validation is described in Section B8.2 and Section D2.

B8.2 DATA VALIDATION

Following completion of the contract compliance screening process, TtNUS will subject 100 percent of the laboratory data to full validation as described in Section D2.2.2. The validation process includes a review of summary information to determine adherence to analytical holding times, results from analysis of field duplicates, method blanks, field blanks, surrogate spikes, MS/MSDs, LCSs, and sample temperatures during shipping and storage. The results of the contract compliance screening process are incorporated into the data validation process. Data qualifiers are applied to analytical results during the data validation process based on adherence to method protocols and laboratory-specific QA/QC limits.

Secondary data (i.e., data obtained from independent sources or data that is not used directly in decision making) will be used for this project. Some of the secondary data will be generated in the field (e.g., measurements used to establish the stabilization of sampling conditions prior to groundwater sample collection). The secondary data also include sources such as historical data, land survey data, and well installation data. If not previously reviewed for quality, these data will be reviewed to ensure that they are suitable for their intended purpose. This typically means that historical data are compared to more recent

data and any apparent anomalies or inconsistencies are investigated to ascertain whether the historical or more recent data could be in error. It also means that data generated in the field such as survey data or chemical measurements are reviewed independently by someone other than the surveyor or sampler who generated the data. The nature of the data comparisons and reviews varies with the data. The FOL is responsible for reviewing chemical measurement data generated in the field. Survey data are reviewed for accuracy by comparing the surveyed coordinates to the proposed sample collection coordinates. Any other anomalies that are detected will be handled on a case by case basis.

The validation guidelines found in Appendix C were developed in accordance with the most recent version of the National Functional Guidelines for Organic Data Review and the National Functional Guidelines for Inorganic Data Review as modified for the specific analytical method. Expanded criteria for the validation guidelines were developed where professional judgment is recommended within the EPA guidelines. QC guidelines are those specified in the analytical method protocols.

Data qualified as rejected will be assessed as to their critical importance. If required, the samples will be recollected and reanalyzed.

B8.3 DATA MANAGEMENT PROCEDURES

Laboratory data recording, transformation, and reduction of analytical results are performed in accordance with applicable SOPs that govern sample check-in, tracking, handling, preparation for analysis, analysis, calculation of final results, and quality control. Field SOPs contain similar information. Laboratory and field SOPs, which include analysis flow charts, example forms (where appropriate), and the equations used to compute final results, are provided in Appendix A and are referenced throughout the QAPP, where appropriate. Personnel responsible for identifying and correcting errors are identified in Section A4 with descriptions of their duties. The following software and hardware will be used for data reduction and manipulation:

Software

- Microsoft Excel
- MathSoft Statistica
- ArcView for GIS

Hardware

- IBM-compatible personal computers

Validated laboratory data are used as is. Aside from simple statistical data summaries such as frequencies of detection, means, and standard deviations, the numbers and types of data manipulations of laboratory data that will be required for generating the AMR report are unknown. This is so because the data themselves will determine how many and what type of computations/manipulations are necessary. However, it will be required to provide example calculations in the AMR report for all critical computations such as statistical calculations. For the more esoteric calculations such as kriging, a requirement exists to inspect the results for reasonableness.

A project-specific repository has been established in the TtNUS SQL Server database so that environmental data for this project are separable from other project data. This separability provides data security. To further enhance data security, the project database is password protected to prevent unauthorized access. Unless specifically granted "write" privileges, all project personnel will possess "read only" access to the database. The project manager and the database manager must concur concerning access privileges before a person is granted "write" privileges. This concurrence is usually informal and is not generally documented because the number of people with any level of access to the database is limited.

A database manager attends key internal project meetings to ensure that information that is essential to the smooth operation of the project database is gathered at the appropriate points in a project. Database system requirements are continually communicated through this person to other project team members. This person also provides oversight of the environmental data throughout the data life cycle. The TtNUS environmental data life cycle (EDLC) is as follows:

1. Database Setup
2. Project Planning
3. Data Collection
4. Data Receipt From Field or Laboratory
5. Data Review/Validation/Verification
6. Data Loading
7. Report Generation
8. Archiving

All steps of the EDLC are essential to assure data users of a high level of data integrity.

Upon receipt, the electronic data deliverables are checked for completeness and compliance under the supervision and direction of the Data Validation Manager. These checks are made against the laboratory subcontract which delineates the format and content of the data deliverable.

The hard copy data (or equivalent .pdf file) is used as the basis for data validation. The calibration data, quality control data, example calculations, and other pertinent data are evaluated relative to the data validation criteria, as described in Section D2. Data that are perceived to be deficient in quality are reviewed and, if found to be deficient relative to the validation criteria, are flagged with the appropriate data validation qualifier flags. The validation output is a series of computer screens that summarizes the validation findings. The data are stored temporarily in the "validation database" pending Data Validation Manager review.

Electronic forms and reports are implemented in Oracle Developer Release 6i. Data setup and loading modules utilize MS Access User Interface forms (VBA) and are coded with ODBC connection strings for SQL. There are no hard copy forms for these processes, although some requests for database services may be made in writing at the discretion of the requestor.

At this point, the validation output is reviewed by the Data Validation Manager and corrections are made, as necessary. The data validation process culminates in the generation of a hard copy data validation letter which summarizes the detected data deficiencies. These letters are typically provided as an appendix to the project AMR.

Upon approval by the Data Validation Manager, the validated data are uploaded electronically to the TtNUS Microsoft SQL server database. The data are subjected to a series of logic checks to ensure that there are no significant incompatibilities with the database requirements. Any incompatibilities detected at this stage of data transfer are resolved by the project database coordinator and project team members, as necessary.

During the data validation period or shortly thereafter, data collected in the field such as well coordinates, well screen depths are transferred manually to the SQL data system. The standard practice for manual data entry into the SQL Server database is for two individuals to independently enter the data. Any discrepancies between corresponding data values are resolved at that point, typically by checking the hard copy data.

Upon entry of the validated data into the SQL Serve database, the data are officially available to the project team. At this point, the data are used in various ways that are largely dictated by the data themselves. The level of effort anticipated for this project is to:

- Generate descriptive statistics.
- Generate isoconcentration plots for select groundwater VOCs .
- Generate tag maps for detected groundwater VOCs.
- Compare current groundwater VOC data to historical data.
- Compare VOC data to risk-based screening levels.
- Compare observed detection limits to anticipated detection limits and risk-based screening levels.

The software used for the data manipulations is commercial software that varies from Microsoft Excel and StatSoft Statistica for summary statistics and tables to C-Tech EVS and ESRI ArcView for data visualization. Data tables and plots are produced from the Microsoft and StatSoft software, and hard copy maps and related figures are produced from the visualization software. In addition, certain figures such as geological cross-sections may be produced using computer aided design software. Where reasonable, e.g., for statistical calculations, sample calculations are provided in the AMR. Each output is checked for accuracy and reasonableness by the generator of the output and by the project manager. Many times example calculations can not be provided (e.g., when generating maps). In those cases, the outputs are inspected by a knowledgeable project team member to ensure that the results are accurate within expectations.

At the discretion of the TOM, project data may be transferred to TtNUS's environmental geographical information system. This system, which is written in ArcView 2 (Avenue), provides end users with real-time reporting capability and the ability to prepare simple posting plots at their discretion.

Typically, after several different data presentations are generated, the project team, with TOM oversight, selects those outputs that will become part of the AMR. The selected outputs will be chosen to illustrate or demonstrate certain characteristics of the data that as accurately as possible represent the physical nature of site contaminants. These characteristics will form the basis of decision making and evaluating whether project objectives have been attained. Much of the evaluations will necessarily involve best professional judgments on the part of the data users and will take into account various aspects of the investigation such as:

- Statistical outlier tests, as necessary.
- Observed spatial and temporal chemical concentration trends.

- Relative magnitudes of observed concentrations and risk-based levels.
- Geology, hydrogeology, and topography of the site.
- Spatial relationships among site features and elevated or non-elevated chemical concentrations and potential contaminant sources.
- Chemical relationships of chemicals (e.g., whether they have a parent-daughter relationship).

C1 ASSESSMENT AND RESPONSE ACTIONS

Performance and system audits will be conducted periodically to ensure that work is being implemented in accordance with the approved QAPP and in an overall satisfactory manner. Some examples of pertinent audits are as follows:

- The FOL will supervise and check daily that the field observations are made accurately, equipment is thoroughly decontaminated, samples are collected and handled properly, and fieldwork is documented accurately and neatly.

- The TOM will maintain contact with the FOL and Data Validation Manager to ensure that management of the acquired data proceeds in an organized and expeditious manner.

Details regarding additional audit responsibilities, frequencies, and procedures are provided in the remainder of this section. Field performance and system audits are addressed in Section C1.1. Laboratory performance and system audits are discussed in Section C1.2.

C1.1 FIELD PERFORMANCE AND SYSTEM AUDITS

This section presents the responsibilities, frequencies, and procedures associated with internal and external field performance and system audits.

C1.1.1 Internal Field Audits

C1.1.1.1 Internal Field Audit Responsibilities

In addition to the daily checks performed by the FOL, the Navy or designee may conduct an independent performance and system audit of field activities. Such audits may be scheduled by the Navy without involvement of the Navy RPM, TtNUS, TOM, or Bay West PM. If a formal field audit is conducted for this study, the QAM (or designee) will be responsible for ensuring that sample collection, handling, and shipping protocols, as well as equipment decontamination and field documentation procedures, are being performed in accordance with the approved QAPP and SOPs.

C1.1.1.2 Internal Field Audit Frequency

As explained in Section C1.1.1.1, internal field audits may be scheduled by the Navy without the involvement of the Navy RPM, TtNUS TOM, or Bay West PM.

C1.1.1.3 Internal Field Audit Procedures

Internal field audits will be conducted in accordance with the following procedures:

- Prior to the audit, the auditor will prepare a detailed checklist to be used as an auditing guide.
- Upon arrival at the audit location, the auditor shall conduct a pre-audit meeting with the responsible management of the organization or project to be reviewed.
- Field audits will include a review of required project documentation (logbooks, sample log sheets, etc.) and field operations (sample COC, sample handling, etc.) to evaluate completeness and compliance with applicable SOPs.
- The audit checklist will be used to record observations including any noted nonconformances.
- A formal post-audit debriefing will be conducted, and potential immediate corrective actions will be discussed.
- The auditor will generate a formal audit report that will address corrective actions; the auditor will provide this report to the Navy.
- The Navy or designee will ensure that all corrective actions are addressed and will provide written verification of corrective action implementation to the auditor.
- The auditor will manage corrective action verification and audit closure.
- The following audit records will be maintained by the QAM:
  - Audit checklists
  - Audit reports
  - Response evaluations
  - Verification of corrective actions
  - Follow-up checklists and audit reports

C1.1.2 External Field Audits

C1.1.2.1 External Field Audit Responsibilities

The MPCA, the USEPA Region 5, or both may conduct external field audits.

C1.1.2.2 External Field Audit Frequency

External field audits may be conducted at any time during field activities at the discretion of the MPCA and USEPA Region 5. If an audit is to be conducted, scheduling should be coordinated through the TtNUS QAM to ensure that personnel and equipment are available as necessary. Personnel being audited may or may not be informed of the impending audit at the discretion and request of the auditing body.

C1.1.2.3 External Field Audit Procedures

External audit procedures are at the discretion of the MPCA and USEPA Region 5.

C1.2 LABORATORY PERFORMANCE AND SYSTEMS AUDITS

This section presents the responsibilities, frequencies, and procedures associated with internal and external laboratory performance and systems audits.

C1.2.1 Internal Laboratory Audits

Guidance on the Navy audit process, including the Navy's audit checklist, can be found in the Department of Defense Quality Systems Manual for Environmental Laboratories at the following web address: https://www.denix.osd.mil/denix/Public/Library/Compliance/EDQW/qsml.html.

C1.2.1.1 Internal Laboratory Audit Responsibilities

The QAO or appropriate designee of the subcontracted laboratory performs routine internal audits of the laboratory. The Navy, through the NFESC, also conducts internal laboratory audits. TtNUS and Bay West hold no responsibility for such audits. Performance and system audits of laboratories are coordinated through the NFESC by an independent QA contractor. It is the responsibility of the NFESC and its contractor to ensure that the subcontracted laboratory complies with good laboratory practices and general requirements of all analytical services provided by the laboratory.

C1.2.1.2 Internal Laboratory Audit Frequency

In accordance with Section 10.0 of Appendix A, internal laboratory audits are performed periodically. In addition, each laboratory department at En Chem analyzes blind performance evaluation (PE) samples. The En Chem QAO or designee also performs data audits at least once per year for each analytical area.

The Navy completes internal laboratory performance and system audits for each contracted laboratory on an 18-month schedule.

C1.2.1.3 Internal Laboratory Audit Procedures

Internal systems audits are conducted to detect any problems in sample flow, analytical procedures, or documentation to ensure adherence to laboratory SOPs.

Internal Navy laboratory audit procedures, as performed by a Navy contractor, include a pre-screening process that requires review of the laboratory's QA Plan, analysis of PE samples, generation of data deliverables for those samples, an on-site technical systems audit of the laboratory, and satisfactory resolution of all deficiencies and findings.

C1.2.2 External Laboratory Audits

C1.2.2.1 External Laboratory Audit Responsibilities

The MPCA and USEPA Region 5 may perform external audits at their discretion. En Chem is also involved in various other external audits and performance evaluation studies throughout the year, as required, to maintain certifications and/or approvals by other regulatory agencies or programs.

C1.2.2.2 External Laboratory Audit Frequency

USEPA Region 5 or MPCA may conduct an external laboratory audit prior to or during sampling and analysis activities.

C1.2.2.3 External Laboratory Audit Procedures

External audit procedures are at the discretion of USEPA Region 5 and the MPCA. External laboratory audits may include (but are not limited to) review of laboratory analytical procedures, laboratory on-site audits, and/or submission of PE samples to the laboratory for analysis.

C2 REPORTS TO MANAGEMENT

QA reports to management will be provided in four primary formats during the course of this investigation: data validation reports, reports summarizing accomplishments and QA/QC issues during the field investigation, project-wide progress reports, and laboratory QA reports. The frequencies of report generation, report content, report preparer, and report recipient(s) are summarized in Table C2-1.

Data validation reports will address all major and minor laboratory noncompliances as well as noted sample matrix effects. In the event that major problems occur with the analytical laboratory (e.g., repeated or extreme holding time exceedances or calibration noncompliances, etc.), the Data Validation Manager will notify the Navy, Bay West PM, TOM, QAM, and Laboratory Services Coordinator. Such notifications (if necessary) are typically provided via internet memoranda and are placed in the project file. These reports contain a summary of the noncompliance, a synopsis of the impact on individual projects, and recommendations regarding corrective action and compensation adjustments. Corrective actions for major noncompliances are initiated at the program level.

The FOL will provide the Bay West PM with daily oral field progress reports during the course of the sampling event. These reports will explain accomplishments, deviations from the QAPP, and upcoming activities, and will contain a QA summary. Bay West provides a monthly progress report to the Navy that addresses the project budget, schedule, accomplishments, planned activities, and QA/QC issues and intended corrective actions.

The subcontracted analytical laboratories will provide a QA report to Bay West if QC limits, MDLs, and RLs are updated or if other significant plan deviations result from unanticipated circumstances.

TABLE C2-1

SUMMARY OF REPORTS
NIROP FRIDLEY, MINNESOTA

Report	Content	Preparer	Frequency of Submittal	Recipient
Data Validation Report	All major and minor laboratory noncompliances as well as noted sample matrix effects.	Data Validation Manager or designee	Per SDG	TOM, Project file
Major Analysis Problem Identification Report (internal memorandum)	Notification of persistent or major problems with analytical laboratory performance. Summary of the noncompliance(s), a synopsis of the impact on the project, and recommendations regarding corrective action and compensation adjustments.	Data Validation Manager or designee	When persistent analysis problems are detected	Bay West PM, TOM, QAM, Laboratory Services Coordinator, Project file, Navy, USEPA
Project Monthly Progress Report	Summary of the project budget, schedule, accomplishments, planned activities, and QA/QC issues and intended corrective actions.	Bay West PM	Monthly for duration of project	Navy, Project file
Field Progress Reports	Explain accomplishments, deviations from the FSP, and upcoming activities and will include a QA summary.	FOL	Daily, oral, during the course of sampling	Bay West PM
Laboratory QA Report	Summary of updated QC limits or significant deviations from planned activities/performance.	En Chem, Inc.	When QC limits are updated or when other significant plan deviations result from unanticipated circumstances	Bay West (TtNUS, Project file; USEPA Region 5, if QAPP deviations impact DQOs)

SDG = Sample delivery group.
TOM = Task Order Manager.
QAM = Quality Assurance Manager.
RL= Reporting Limit.
FOL = Field Operations Leader.
PM = Project Manager.
FSP = Field Sampling Plan.
DQO = Data quality objective.

D1 DATA REVIEW, VALIDATION, AND VERIFICATION REQUIREMENTS

Compliance with quantitative QC objectives for laboratory accuracy and precision as outlined in Tables A7-1 and A7-2 will be evaluated during data validation (Section D2). Compliance with completeness objectives for field and laboratory data will be computed. Sections D1.1 and D1.2 present equations to be used for computing accuracy and precision values, respectively. Section D1.3 describes the means and presents the equation for determining completeness. Section D1.4 addresses the overall data assessment process.

In general, data validation requires that data quality be evaluated batch-by-batch based on the results of quality indicators for the respective batches. Section D1.4 presents additional data quality considerations to be evaluated after data validation. These considerations are designed to incorporate data quality factors that extend beyond evaluation of the simple quantitative estimators for precision, accuracy, and completeness.

D1.1 ACCURACY ASSESSMENT

Sample collection accuracy cannot be evaluated because there is no standard by which to judge such accuracy. Instead of a quantitative evaluation of sample collection accuracy, compliance with field SOPs will be the metric to assess sample collection accuracy. Background comparisons of the data generated by identical sampling and analysis methods incorporate similar biases and are expected to be directly comparable without any adjustments or compensations.

Sample analysis accuracy will be assessed through the use of surrogate spikes, MSs, calibration check standards, internal standards and blanks. Blanks will be used to infer the potential for positive biases because of contamination. To assure the accuracy of the analytical procedures, prior to preparation for analysis, at least 1 of every 20 environmental samples will be spiked with known amounts of target analytes (i.e., MSs). The spiked samples will be analyzed and the concentrations of each target analyte observed in the spiked sample compared to the reported value of the analyte in the unspiked sample to determine the %R of the analyte. The %R for a spiked sample will be calculated using the following formula:

$$\%R = \frac{\text{Amount in Spiked Sample - Amount in Sample}}{\text{Known Amount Added}} \times 100\%$$

D1.2 PRECISION ASSESSMENT

As presented in Section A7.1.3, MSD samples (for organic analyses) will be prepared and analyzed at a minimum frequency of 1 per every 20 environmental samples per matrix. As described in Section A7.1.2, field duplicate samples will be collected a minimum frequency of 1 per 10 environmental samples per matrix. The RPD between a sample or MS (Sample 1) and its duplicate or MSD (Sample 2) is calculated using the following formula:

$$\text{RPD} = \frac{|\text{Amount in Sample 1} - \text{Amount in Sample 2}|}{0.5\,(\text{Amount in Sample 1} + \text{Amount in Sample 2})} \times 100\%$$

D1.3 COMPLETENESS ASSESSMENT

Completeness for this project will be determined based on the number of sample results for each target analyte and each sample type that are usable as determined through data validations and data assessment. Data values rejected during data validation (indicated by an "R" flag) will be considered unusable unless additional review and documentation by one or more technical team members demonstrates that the rejection is erroneous. To monitor completeness, the number of usable, valid results (i.e., non R-qualified results) for each matrix type and analyte will be counted and compared to the completeness objectives in Section A7.3.2 and A7.3.3.

Percent completeness will be calculated using the following equation:

$$\%\,\text{Completeness} = \frac{\text{Number of Valid Measurements}}{\text{Number of Measurements Planned}} \times 100\%$$

D1.4 DATA ASSESSMENT

The assessment of data obtained from this investigation is a critical part of determining what the next step in data collection and decision making should be. It must be determined if the data are of appropriate type, quality, quantity, and representativeness to support the project objectives. The effect of the loss of data deemed unacceptable for use, for whatever reason, will be evaluated.

D1.4.1 Reconciliation with Data Quality Objectives

Field data will be examined immediately after generation for errors. Laboratory data will be examined upon receipt from the laboratory in a cascading series of evaluations. The first step will be a data verification and validation as described in Section D2.

After data validation, the data will be reconciled with DQOs to determine whether sufficient data of acceptable quality are available for decision making. DQOs are provided in Appendix B of the RAMP. In addition to the evaluation described in Section D1.1 through D1.3, a series of inspections will be performed to estimate several of the data set characteristics. These inspections will be designed to:

- Identify deviations, if any, from field sampling SOPs.
- Identify deviations, if any, from laboratory analytical SOPs.
- Identify deviations, if any, from the QAPP.
- Identify deviations, if any, from the data validation process.
- Identify and explain the impacts of elevated RLs.
- Identify unusable data (i.e., data qualified as "R").
- Evaluate adherence to investigation objectives and decision rules.
- Ensure completion of corrective actions.
- Evaluate effects of deviations from planned procedures and processes on the interpretation and utility of the data.

The TOM shall bear ultimate responsibility to ensure that data are evaluated in a manner consistent with project objectives. All data will be retained as part of the final record even though they may not be used in decision making.

D2 VALIDATION AND VERIFICATION METHODS

This section describes the procedures to be used for data reduction, validation, and reporting. Data generated during the course of the field investigations will be maintained in hard copy form in the Administrative Record at NIROP Fridley.

D2.1 DATA REDUCTION

D2.1.1 Field Data Reduction

All field logs containing observations will be inspected and approved by the FOL. All field observations will be recorded in the logs immediately after observations are made.

If errors are made in recording or transcribing observations, erroneous observations will be legibly crossed out using a single line, initiated, dated by the field member, and corrected in a space adjacent to the crossed-out entry. The FOL has responsibility to assure that errors are identified and assessed relative to the intent of the QAPP.

Errors judged to affect the utility of the sample results within the context of this investigation shall be brought to the immediate attention of the Navy.

D2.1.2 Laboratory Data Reduction

Data reduction will be completed by En Chem in accordance with the method-specific laboratory SOPs included in Appendix A.

Laboratory analytical data will be reported using standard concentration units to ensure comparability with previous analytical results. Groundwater sample results will be reported in units of micrograms per liter (µg/L).

D2.2 DATA VALIDATION

Validation of field measurements and laboratory analytical data are discussed in this section.

D2.2.1 Procedures Used to Validate Field Data

Field measurements will not be subjected to a formal data validation process. Validation of field data will be limited to real time inspection by the FOL of observations relative to actual site conditions and activities. In addition, field technicians will ensure that the equipment used for sample collections is performing adequately via compliance with the applicable SOPs.

D2.2.2 Procedures Used to Validate Laboratory Data

One hundred percent of the laboratory analytical data will be subjected to validation to ensure that the data are of evidentiary quality. Validation of analytical data will be completed by the TtNUS Environmental Chemistry/Toxicology Department located in TtNUS's Pittsburgh office. Final review and approval of validation deliverables will be completed by the Department's Data Validation Manager.

Analytical results will be validated versus the applicable analytical methods, the SOPs included in Appendix A, and the requirements of this QAPP. Validation of these data will conform to the USEPA Region 5 Standard Operating Procedures for Validation of CLP Organic Data (USEPA, 1997a) and the National Functional Guidelines for Organic Data Review (USEPA, 1999a) to the greatest extent practicable. Data validators will review the chemical analytical data packages submitted by the laboratory. The data validators will check that the data were obtained using approved methodology, that the appropriate level of QC and reporting was conducted, and that the results are in conformance with QC criteria.

On the basis of the data validation results, the data validator will generate a report describing detected data limitations. The report will be reviewed internally by the Data Validation Manager prior to submittal to the TOM. Data review will be extended beyond this routine validation by involving the project chemist to examine the data for anomalies (See Section D1.4). This additional review may result in more detailed inspection of the data to determine the cause of, and to rectify, individual anomalies. The impact of data qualifiers on data usability will also be assessed and any qualifications that are indicated during use of the data shall be documented in the FA report.

The data validation process will provide an estimate of the number of usable data points. This completeness check will be effected by computing the number of data points that are rejected relative to the total number of data points for a given analyte in a given environmental medium.

D2.3 DATA REPORTING

This section discusses data reporting requirements for field and laboratory analytical data. Section D2.3.1 discusses field measurement data handling and reporting. Section D2.3.2 discusses laboratory data handling and reporting.

D2.3.1 Field Data Reporting

Field data will be transferred manually from the site logbook or sample logsheets to the electronic database and will be reviewed for accuracy by an independent reviewer.

All records regarding field measurements (i.e., field logbooks, sampling logbooks, and sample logsheets) will be placed in the TtNUS central files upon completion of the field effort. Entry of these results in the database will require removal of these records from the files. Outcards (including date, person, and subject matter information) will be used to document the removal of any such documentation from the files. After database entry is complete, all records will be copied for placement in TtNUS central files. All original records will be sent to NIROP Fridley for inclusion in the final evidence files as described in Section B3.3.

D2.3.2 Laboratory Data Reporting

To achieve the investigation objectives, a confirmational level of analytical quality is needed. This provides the highest level of data quality necessary to address potential risks. These analyses require full documentation of the chosen USEPA SW-846 and other analytical methods and sample preparation steps, data packages, and data validation sufficient to provide defensible data. QC must be sufficient to define the overall precision and accuracy of these procedures. Therefore, data reported by En Chem for all analytical fractions will be in a CLP-like reporting format. Hard copy data deliverables shall be generated at the time of analysis. All pertinent QC data including raw data and summary forms for blank, standard analysis, calibration information, etc., will be provided for all analyses. Case narratives will be provided for each SDG.

Validation will be completed using the hard copy data. Upon completion of validation of a SDG and review by the Data Validation Manager, the validation qualifiers will be entered into the electronic database and will be subjected to independent review for accuracy. During this review process, the electronic database printout will be compared with the hard copy data to ensure that the hard copy data and electronic data are consistent.

D2.4 DATA ACQUISITION REQUIREMENTS AND DATA MANAGEMENT

Data acquisition and management begins with the identification and collection of past data and newly acquired project samples. The samples are labeled and tagged, packaged for shipment, and shipped to the analytical laboratory in accordance with Section 4.3.5 of the RAMP. The samples are received at the laboratory and analyzed, the analytical results are reported by the analyst along with QC check data, and the data are reviewed within the laboratory according to laboratory SOPs as provided in Appendix A. Data are then transmitted from the laboratory in both hardcopy and electronic formats according to laboratory SOPs as provided in Appendix A. Upon receipt by TtNUS, the data are validated, analyzed, assessed, and ultimately archived.

The electronic database will include pertinent sampling information such as sample number, sampling date, sample point location, and analytical information. Sample-specific RLs will be reported for nondetected analytes. Units will be clearly summarized in the database and will conform to those identified in Section D2.1.2. The original electronic diskettes and data validation reports for this investigation will be maintained in the Administrative Record at NIROP Fridley, and copies will be maintained in TtNUS central files.

D3 CORRECTIVE ACTION

Under the TtNUS QA/QC program, it is required that any and all personnel noting conditions adverse to quality should report these conditions immediately to the TOM and QAM. These parties, in turn, are charged with performing root-cause analyses and implementing appropriate corrective actions in a timely manner. It is ultimately the responsibility of the QAM to document all findings and corrective actions taken and to monitor the effectiveness of the corrective measures performed. A brief summary of corrective actions for some specific field and laboratory QC check samples is presented in Section A7, Table A7-2.

D3.1 FIELD CORRECTIVE ACTION

Field nonconformances or conditions adverse to quality must be identified and corrected as quickly as possible so that work integrity or product quality is not compromised. The need for corrective action may arise based on deviations from project plans and procedures, adverse field conditions, or other unforeseen circumstances. Corrective action needs may become apparent during the performance of daily work tasks or as a consequence of the internal or external field audits.

Corrective action may include resampling and may involve amending previously approved field procedures. Minor modifications to field activities, such as the collection of additional samples, will be initiated at the discretion of the FOL, subject to on-site approval by NIROP Fridley personnel. Major modifications, such as the elimination of a sampling point or other situations that affect compliance with or achievement of DQOs, must be approved and documented. Approval of the corrective action will be obtained by the Navy (in conjunction with USEPA Region 5). The FOL is responsible for initiating modification requests for all deviations from the project plan documents, as applicable. Documentation of all modification requests will be maintained with the on-site project planning documents and will be placed in the final evidence file.

D3.2 LABORATORY CORRECTIVE ACTION

In general, laboratory corrective actions are warranted whenever an out-of-control event or potential out-of-control event is noted. The specific corrective action taken depends on the specific analysis and the nature of the event. Generally, the following occurrences alert laboratory personnel that corrective action may be necessary:

- QC data are outside established warning or control limits
- Method blank analyses yield concentrations of target analytes above acceptable levels
- Undesirable trends are detected in spike %Rs or in duplicate RPDs
- There is an unexplained change in compound detection capability
- Inquiries concerning data quality are received
- Deficiencies are detected by laboratory QA staff during audits or from PE sample test results

Any corrective action taken above the analyst level that cannot be performed immediately at the instrument will be documented. Corrective actions typically are documented for out-of-control situations on a Corrective Action Form or and Out-of-Control Event Form (Appendix A).

Laboratory corrective actions must be documented and included as part of the Final Evidence File. Major corrective actions that do not bring DQO-related nonconformances into conformance with project DQOs shall be identified to the Bay West PM and the TtNUS TOM who will advise all levels of project management, including the USEPA, in accordance with Section C2 of this QAPP.

D3.3 CORRECTIVE ACTION DURING DATA VALIDATION AND DATA ASSESSMENT

The need for corrective action may become apparent during data validation, interpretation, or presentation activities. The performance of rework (i.e., resampling or reanalysis), the institution of a change in work procedures, or the provision of additional/refresher training are possible corrective actions relevant to data evaluation activities. The TOM will be responsible for approving the implementation of a corrective action and ensuring that it is documented appropriately. The USEPA will be directly notified of any corrective actions taken. Analytical data may be qualified during data validation to alert data users to the potential that particular analysis results are potentially deficient relative to expected performance standards. Such validation practices are described in Section D2.2. When conducting data assessment for project decision making, a number of situation-dependent qualifications on data or decisions are possible. The number of possible situations or conditions precludes enumeration of all possible corrective actions; however, the approach used to identify and impose such qualifications is described in Section D1.4.

D3.4 CORRECTIVE ACTION FOR ADMINISTRATIVE ACTIVITIES

Findings identified through office procedures and file audits may also necessitate the performance of corrective actions. Corrective actions involving file management and office procedures usually consist of correction of an isolated nonconformance or the performance of activities necessary to conform with clarified guidance.

REFERENCES

Naval Facilities Engineering Service Center (NFESC), 1996. Navy Installation Restoration Laboratory Quality Assurance Guide, NFESC Interim Guidance Document, Naval Facilities Engineering Services Command, February.

Minnesota Pollution Control Agency (MPCA), 1996. Final Issuance National Pollution Discharge Elimination System / State Disposal System (NPDES/SDS) Permit MN0000710, St. Paul, MN, October.

RMT, Inc. (RMT), 1995. Remedial Action Work Plan for Groundwater Remediation at the Naval Industrial Reserve Ordnance Plant, Fridley, Minnesota, Revision 3, Madison, WI.

United States Environmental Protection Agency (U.S. EPA), 1983. Methods for Chemical Analysis of Water and Wastes, EPA-600/4-79-020, Office of Research and Development, Cincinnati, OH, March.

U.S. EPA, 1984. 40 Code of Federal Regulations Part 136 Appendix B, Federal Register Vol. 49, No. 209, pages 198-199, October 26.

U.S. EPA, 1990. Record of Decision for Groundwater Remediation at the Naval Industrial Reserve Ordnance Plant, Fridley, Minnesota, Region 5, Chicago, IL.

U.S. EPA, 1997a. Region 5 Standard Operating Procedure for Validation of CLP Organic Data, U.S. EPA Region 5 Environmental Sciences Division, Central Regional Laboratory, Chicago, IL, February.

U.S. EPA. 1997b. Test Methods for Evaluating Solid Waste; Physical/Chemical Methods (SW-846), 3rd Edition, Update III, Office of Solid Waste and Emergency Response, Washington, DC, June.

U.S. EPA, 1999a. Laboratory Program National Functional Guidelines for Organic Data Review, EPA-540/R-94/012, Office of Solid Waste and Emergency Response, Washington, DC, October.

U.S. EPA, 1999b. EPA Requirements for Quality Assurance Project Plans, EPA QA/R-5, Washington, DC, November.

U.S. EPA, 2000. Instructions on the Preparation of a Superfund Division Quality Assurance Project Plan, Region 5, June.

APPENDIX A

LABORATORY STANDARD OPERATING PROCEDURES

QUALITY MANUAL
FOR
EN CHEM, INC. - MADISON, WI

REVISION 3

Prepared by:
En Chem, Inc.
525 Science Drive, Madison, WI 53711
Ph: (608)-232-3300, Fax: (608)-233-0502
www.enchem.com

EFFECTIVE DATE:
{January 30, 2002}

Glen A. Coder, Chief Operating Officer — Date: 2/5/2002

Julie A. Trivedi, Quality Assurance Officer — Date: 2/5/2002

UNCONTROLLED COPY

COPY NUMBER_____

TABLE OF CONTENTS

1.0 Policy Statement
1.1 Mission Statement
1.2 National Environmental Laboratory Accreditation Conference (NELAC) Compliance
1.3 Staff Freedom from Undue Pressures
1.4 Legal Identification

2.0 Organization and Responsibilities
2.1 Organization Chart
2.2 Laboratory Management Director
2.3 Quality Assurance Officer
2.4 Technical Directors for Chemical Analyses
2.5 Support Systems Supervisors
2.6 Technical Staff
2.7 Training
2.8 Laboratory Capabilities

3.0 Quality Assurance Objectives
3.1 Precision
3.2 Accuracy
3.3 Representativeness
3.4 Completeness
3.5 Comparability
3.6 Data Reporting Limits

4.0 Sampling Procedures
4.1 Ice Chests and Shipping Containers
4.2 Sample Containers
4.3 Sample Preservation
4.4 Notification of Receipt of Potentially Hazardous Samples

5.0 Sample Control and Processing
5.1 Bottle Request and Chain-of-Custody Forms
5.2 Chain-of-Custody Procedures
5.3 Sample Receipt
5.4 Sample Storage
5.5 Sample Disposal

6.0 Calibration Procedures and Frequency
6.1 Traceability of Calibration
6.2 NIST Traceable Reference Standards
6.3 General Requirements
6.4 Analytical Support Equipment
6.5 Instrument Calibration

7.0 Test Methods and Standard Operating Procedures
7.1 SOP Preparation and Organization
7.2 SOP Control and distribution
7.3 SOP Archival
7.4 SOP Format for Test Methods
7.5 Laboratory SOP Listing
7.6 Deviations from Laboratory SOP

8.0 Internal Quality Control Checks
8.1 Laboratory Quality Control Samples
8.2 Method Detection Limits
8.3 Selectivity (Organics Analysis)
8.4 Demonstration of Method Capability
8.5 Solvent, Reagent and Adsorbent Check Analysis

9.0 Data Reduction, Review, Reporting and Records
9.1 Data Reduction and Review
9.2 Report Format and Contents
9.3 Records
9.4 Document Control System
9.5 Confidentiality

10.0 Performance and System Audits and Frequency
10.1 Internal Laboratory Audits
10.2 Performance Audits
10.3 Managerial Review

11.0 Facilities, Equipment, Reagents and Preventative Maintenance
11.1 Equipment and Reference Materials
11.2 Documentation and Labeling of Standards and Reagents
11.3 Computers and Electronic Data Related Requirements
11.4 Preventative Maintenance
11.5 Inspection/Acceptance Requirements for Supplies and Consumables

12.0 Specific Routine Procedures Used to Evaluate Data Quality
12.1 Laboratory Control Samples
12.2 Matrix Spikes / Matrix Spike Duplicates
12.3 Surrogate Recoveries
12.4 Method Blanks

13.0 Corrective Action
13.1 Resolution of Client Complaints

14.0 Subcontracting and Support Services and Supplies
14.1 Subcontracting Laboratory Services
14.2 Outside Support Services and Supplies

15.0 References

Appendices
Appendix A NELAC Certification Statement
Appendix B Initial Demonstration of Capability / Certification Statement
Appendix C Organizational Charts
Appendix D Personnel Summary
Appendix E Laboratory Capabilities
Appendix F Laboratory Instrument Inventory
Appendix G Laboratory Floorplan
Appendix H Laboratory Certifications / Approvals
Appendix I Laboratory Forms
Appendix J SOP Listing
Appendix K Method References

1.0 POLICY STATEMENT

This Quality Manual summarizes the policies and procedures associated with En Chem, Inc. (En Chem) laboratory, located in Madison, WI. Specific protocols for sample handling and storage, chain-of-custody, laboratory analyses, data reduction, corrective action, and reporting are described. Adherence to procedures listed in this manual shall be the responsibility of all En Chem employees of the Madison Laboratory. Laboratory management shall be responsible for seeing that procedures and practices described in this manual, and all referenced Standard Operating Procedures (SOPs), are fully implemented. In the event that a signatory leaves the company, for any reason, the documents shall remain in effect, to allow for revision, for a maximum period of one year or, until the document is archived. Other signatories, as well as the replacement for the vacated position, shall be responsible for implementation of the practices and procedures described in the laboratory documents.

The En Chem Madison Laboratory performs chemical analyses for inorganic and organic constituents in water, soil, and biological matrices.

The technical and service requirements of all requests to provide analyses are thoroughly evaluated before commitments are made to accept the work. This includes a review of facilities and instrumentation, staffing, and any special QC or reporting requirements. All measurements are made using published reference methods or methods developed by En Chem Madison. All methods are validated according to the procedure described in Appendix B prior to use.

Any unusual requests, such as lower detection limits or additional QC, that are specified on the work order or project QAPP, will take precedence over this QA Manual if they conflict.

This Quality Manual shall be reviewed at least annually and updated as required.

1.1 Mission Statement

En Chem exists to provide innovative ideas, services, and tools to foster the revitalization of the environment.

1.2 National Environmental Laboratory Accreditation Conference (NELAC) Compliance

All policies and procedures have been structured in accordance with the NELAC standards adopted in July 1998 and applicable EPA requirements, regulations, guidance, and technical standards. This manual has been prepared in accordance with the guidance documents listed in Section 15 of this manual. Further details on these policies and procedures are contained in SOPs and related documents.

A Certification statement that addresses continual compliance with NELAC standards is included in Appendix A of this manual.

1.3 Staff Freedom From Undue Pressures

En Chem laboratory staff shall not be subject to any commercial, financial, or other undue pressures which might adversely affect the quality of their work. Any member of the staff who feels the quality of their work is potentially compromised by these, or any other influence, should bring their concerns to the attention of the QA Officer and/or the President of En Chem.

1.4 Legal identification

The Federal Taxpayer ID for En Chem is: 39-1695955. The US-EPA Laboratory ID for the Madison facility is: WI-00051.

2.0 ORGANIZATION AND RESPONSIBILITIES

2.1 Organization Chart

A corporate organizational chart for En Chem is shown in Appendix C, Figure 1. This chart includes all En Chem Laboratories and Service Offices. The street addresses and phone numbers for each location are listed in Figure 2.

An organization chart for the Madison facility is shown in Appendix C, Figure 2. A listing of credentials for all laboratory staff is presented in Appendix D.

2.2 Laboratory Management Director

The Laboratory Director is responsible for:

- Defining the minimal level of experience and skills necessary for all positions in the laboratory. In addition to education and/or experience, basic laboratory skills are considered.
- Ensuring that all technical laboratory staff have demonstrated initial and ongoing proficiency in the activities for which they are responsible.
- Ensuring that the training of personnel is kept up-to-date.
- Documenting all analytical and operational activities.
- Supervising all personnel.
- Ensuring that all sample acceptance criteria, as defined in SOP GEN-30, are verified and that samples are logged into the sample tracking system and properly labeled and stored.
- Performing an annual Management System Review.
- Documenting the quality of analytical results reported by the laboratory.
- Ensuring that the laboratory has the appropriate resources and facilities to perform requested work.
- Ensuring that corrective actions relating to findings from the internal audit are completed.
- Nominating deputies when a Technical Director or the Quality Assurance (QA) Officer is absent.
- Responsible for overall operation of the organization including fiscal resources and personnel. Examples of these duties include business development, approval of capital investments, coordination of branch offices and long range planning.

2.3 Quality Assurance Officer

The QA Officer is independent of production involvement and day-to-day operations. The QA Officer reports directly the Laboratory Director to resolve any dispute involving data quality. An organization chart is included in Appendix C. The QA Officer establishes policies to insure data quality objectives are achieved and is responsible for the implementation of the Quality System. The QA Officer is authorized to stop work as deemed necessary in the event of serious QA/Quality Control (QC) issues. Specific functions and duties include:

- Performing QA audits on various phases of laboratory operations.
- Reviewing and approving QA plans and procedures.
- Providing QA technical assistance to project staff.
- Reporting on the adequacy, status, and effectiveness of the Quality System regularly to the Technical Director and Laboratory Director.
- Overseeing laboratory QA and QC.
- Overseeing QA/QC documentation.
- Overseeing implementation, and monitoring of, laboratory corrective actions.
- Overseeing preparation and maintenance of SOPs.
- Approval of SOPs and QA Procedures.
- Approval of any/all Quality Assurance Project Plan (QAPP).
- Serving as the focal point for QA/QC and being responsible for the oversight and/or review of quality control data.
- Having documented training and/or experience in QA/QC procedures and being knowledgeable in the quality system as defined under NELAP.
- Having a general knowledge of the analytical test methods for which data review is performed.
- Conducting internal audits on the entire technical operation annually.
- Notifying laboratory management of deficiencies in the quality system and monitoring corrective action.

2.4 Technical Directors for Chemical Analyses

The Technical Director for Chemical Analyses reports to the Laboratory Operations Manager and is responsible for:

- Coordinating laboratory analyses.
- Supervising in-house sample management.
- Scheduling sample analyses.

- Overseeing data review.
- Overseeing preparation and approval of final labortaory reports.
- Participating in the annual Management System Review.
- Certifying that personnel with appropriate educational and/or technical background perform all tests for which the laboratory is accredited.
- Approval of the purchase of consumables and supplies used in the laboratory.

2.5 Support Systems Supervisors

2.5.1 The Sample Receiving Group Leader shall be responsible for the following:

- Supervision and training of sample receiving staff.
- Overseeing the processing of daily sample receipts.
- Coordination of sample tracking and disposal within the laboratory.
- Communication of nonconformances in the receipt of samples to the project manager.

2.5.2 The Information Systems Group Leader shall be responsible for the following:

- Supervision and training of laboratory IS staff.
- Administration and maintainence of the laboratory information management system (LIMS) and the laboratory network.
- Troubleshooting and resolution of computer related problems.
- Planning and implementation of policy and changes to the laboratory information systems.

2.5.3 The Client Services Group Leader shall be responsible for the following:

- Supervision and training of the laboratory Project Managers and Project Coordinators
- Management of projects within the laboratory.

2.6 Technical Staff

Technical staff are responsible for sample analysis and identification of corrective actions. All personnel are responsible for complying with all quality assurance/quality control requirements that pertain to their organizational/technical function. As documented in the employee records, each technical staff member has the experience and education to adequately demonstrate knowledge of their particular function and a

general knowledge of laboratory operations, analytical test methods, quality assurance/quality control procedures and records management. A listing of all staff, positions, educational background and experience is included in Appendix D.

2.7 Training

The technical supervisor of each department is responsible for initial training of new employees on safety requirements and procedures and for assuring safety awareness in the laboratory prior to the new employee beginning work in the laboratory area. Courses are held on an "as needed" basis when new employees are hired. Proper reporting of accidents, what to do in case of fire, proper disposal of hazardous waste, and awareness of safety are also included in the training sessions. Training files for each employee are maintained by the QA Departement. Employess are instructed to update their training files to reflect training and reading. All employees are encouraged to report potential safety hazards to the Chemical Hygiene Officer and management.

All employees are required to read, understand, and use the latest version of each laboratory SOP, which relates to their job responsibilities. The procedures in SOP GEN-8 document the use of current SOPs. Analysts and Technicians demonstrate continued proficiency by repeating the Initial Demonstration or, acceptable performance of a blind QC Check Sample (single blind to the analyst) at least once per year. Documentation of proficiency is maintained in laboratory training files by the QA Officer.

2.8 Laboratory Capabilities

The En Chem Madison laboratory performs analyses on water, soil, and biological matrices for environmental contaminants. Analyses performed are listed in Appendix E, along with the analytical technique, literature references, and the corresponding En Chem SOP.

3.0 QUALITY ASSURANCE OBJECTIVES

The overall QA objectives of the En Chem Madison laboratory are to develop and implement SOPs for chain-of-custody, laboratory analysis, and results reporting which will provide results of known and documented quality. The procedures provide a comprehensive and effective quality control program to measure and validate laboratory performance. The system provides for the maintenance of records relating to sample submittal and the production of accurate, precise, and complete laboratory data, using approved or proven methods. In addition, the system identifies factors, which may adversely affect quality and provides for corrective action when necessary.

Several indicators are used as qualitative and quantitative descriptors in interpreting the degree of acceptability or utility of data. The principal indicators are precision, bias (accuracy), representativeness, comparability, completeness, and detection limits. These indicators, defined below in detail, provide goals for the quality of data generated in the analytical measurement process.

3.1 Precision

Precision is a measure of the degree to which two or more measurements are in agreement.

Precision is assessed through the calculation of Relative Percent Difference (RPD) between a sample matrix spike (MS) and matrix spike duplicate (MSD). The RPD is compared to acceptance limits derived from historical laboratory data or from control limits presented in a project specific QAPP. In cases where an insufficient quantity of sample is available for matrix spikes the precision will be evaluated by calculation of the RPD between a Laboratory Control Sample (LCS) and a LCS Duplicate (LCSD).

The RPD is also determined through the assay of field or laboratory duplicates.

For replicate results D_1 and D_2, the RPD shall be calculated:

$$\text{RPD} = \frac{[D_1 - D_2]}{\left[\frac{(D_1 + D_2)}{2}\right]} \times 100$$

3.2 Accuracy

Accuracy is the degree of agreement between an observed value and an accepted reference or true value. Accuracy is expressed in terms of percent recovery (%R).

$$\%R = \frac{O_i - O_s}{T_i} \times 100$$

Where:

%R	=	Percent Recovery
O_i	=	Concentration of analyte observed in the spiked sample.
O_s	=	Concentration of analyte observed in the unspiked sample.
T_i	=	Concentration of the Spike

Accuracy is assessed through the analysis of MS/MSD, quality control check samples, laboratory control samples, and surrogate compound spikes. The % Recovery obtained is compared to control limits derived from historical laboratory data or from control limits presented in a project specific QAPP.

3.3 Representativeness

Representativeness expresses the degree to which data accurately and precisely represent a characteristic of a population, parameter variations at a sampling point, a process condition, or an environmental condition within a defined spatial and/or temporal boundary.

Representativeness is ensured by using the proper analytical procedures, appropriate methods and meeting sample holding times.

3.4 Completeness

Completeness is a measure of the amount of valid data obtained from a measurement system compared to the amount that was expected under normal conditions.

Laboratory completeness is a determination of the amount of valid measurements obtained compared to all the measurements taken in the project. The laboratory completeness objective is to generate valid data for all samples at a rate greater than 95 percent of all samples analyzed.

3.5 Comparability

Comparability is an expression of the confidence with which one data set can be compared to another.

Comparability is achieved by following Standard Operating Procedure, analysis within holding times, the use of approved analytical methods, use of consistent detection levels, and consistent rules for reporting data (including reporting results in common units).

3.6 Data Reporting Limits

3.6.1 Method Detection Limits

Method Detection Limits (MDLs) shall be determined for each analyte and matrix as specified in laboratory SOP LAB-14. The laboratory SOP is based on EPA guidance given in Title 40, Code of Federal Regulations, Part 136, Appendix B. Laboratory MDL determinations shall be performed during initial validation of a method, whenever there is a significant change to the test method or instrument type. MDLS's shall be performed as necessary but no less than once per year on each instrument. The highest valid MDL from all of the instruments used for a particular analysis is used for reporting purposes in LIMS. See SOP LAB-14 for more specific guidance.

3.6.2 Limit of Quantitation

The Limit of Quantitation (LOQ) is nominally 3.18 times the MDL.

3.6.3 Estimated Quantitation Limit

The Estimated Quantitation Limit (EQL) is a nominally chosen reporting limit, which is greater than the MDL. The EQL is the minimum concentration of an analyte that can be identified and quantified within specified limits of precision and bias during routine analytical operating conditions. EQLs may be adjusted to meet specific client project reporting limits. When this occurs, the value is referred to as a Project Specific Reporting Limit (PSRL).

4.0 SAMPLING PROCEDURES

The En Chem-Madison laboratory does not provide field-sampling services.

4.1 Ice Chests and Shipping Containers

Shipping containers are washed and inspected prior to and following use. Containers are rinsed with tap water and air dried before storage. If a container becomes severely contaminated or damaged, it is cleaned as thoroughly as possible, rendered unusable, and properly disposed.

4.2 Sample Containers

The laboratory provides sample containers. All sample containers are purchased from commercial sources and are pre-cleaned and, certified by the vendor. The containers meet or exceed the requirements of "EPA Publication #9240.0-05A" Specifications and Guidance for Contaminant-Free Containers. The sample containers used for a specific project are traceable by lot number to certification statements provided by the manufacturer. These certificates are maintained on file in the laboratory.

4.3 Sample Preservation

Sample preservatives are added to sample containers in the laboratory prior to shipment to the field. Sample preservation requirements are detailed in SOP REC-3. The preparation of preservatives is documented and is traceable to the lot numbers of reagents used to prepare the preservative. The documentation procedure for laboratory reagents and solutions is detailed in SOP LAB-22, Traceability of Laboratory Reagents.

Proper preservation is the ultimate responsibility of the sampling team. The laboratory may provide additional preservatives for any site with a history indicating that non-routine preservation is required. This information should be communicated to the project manager during project start-up. The laboratory verifies proper sample preservation at the time of sample receipt. The adequacy of sample preservation shall be verified and recorded at the time of sample receipt. The preservation of samples for volatile organics is not checked until the analysis is completed.

Specific project requirements, such as notification prior to pH adjustment, shall take precedent over the laboratory SOP if these requirements have been communicated to the laboratory prior to sample receipt.

4.4 Notification of Receipt of Potentially Hazardous Samples

Communication between EnChem project managers and our clients concerning the receipt of potentially hazardous samples is essential. Copies of Material Safety Data Sheets or the results of any field screening may be assessed to determine whether additional safety precautions are required when handling with the samples.

EnChem does not accept radioactive samples for analysis.

5.0 SAMPLE CONTROL AND PROCESSING

Prior to analysis, sample collection, preservation, and storage must be performed properly to maintain sample integrity. En Chem's laboratories are access-controlled facilities. Upon receipt all samples shall be inspected for leakage or breakage, and inventoried against the Chain of Custody document. The sample log-in procedure includes assignment of unique sample identification numbers, to ensure samples can be tracked, data can be stored, and quality control samples can be identified for all analyses occurring in the laboratory. Documentation of storage and laboratory handling is documented at this time. Specific procedures are summarized below, and detailed in laboratory SOPs. Deviations from the SOPs must be documented in accordance with Section 13: Corrective Action, of this manual.

5.1 Bottle Request and Chain-Of-Custody Forms

A Bottle Request Form is generated by the laboratory project manager to ensure that the proper bottle types and preservatives are made available to the project sampling team. The bottle request form is submitted to the laboratory Sample Receiving group before the sampling event. Field personnel must properly complete the sample Chain-of-Custody (COC) Form and return it to the laboratory with the samples. The COC indicates the work requested for each sample point. Work requests can also be pre-arranged with the En Chem project manager. Example Bottle Request and COC forms can be found in Appendix I.

5.2 Chain-Of-Custody Procedures

Sample custody documentation includes records necessary to trace a sample from point of origin through final report. Sample custody documentation requires the recording of each event or procedure to which the sample is subjected. This includes but is not limited to: field activities such as sample collection and preservation, as well as laboratory activities such as sample receipt and sample login. The COC remains with the samples during transport, and serves as a written record of sample possession and transference. A sample is considered to be in custody if it is in one's possession, is locked or sealed during shipment, or is placed in a secure area limited to authorized personnel. The COC must be signed and dated by everyone who takes possession of the samples. Samples and documents shipped by commercial carrier must be sealed in watertight containers. Shipping containers must be sealed before delivery to commercial carriers. The waybill of the carrier shall serve as an extension of the COC

between the field and the laboratory. Upon arrival at the laboratory, the shipping containers are opened in the sample log-in area. Shipping containers suspected to contain potentially hazardous samples are opened in the fume hood present in the sample log-in area. The contents are checked against the COC and any discrepancies are noted. Additions or changes to the COC are signed and dated at the time that they are made. If the discrepancies cannot be resolved, project personnel shall be notified and the samples will be held until the problem is resolved. The laboratory will not be responsible for meeting holding times on these types of problem samples. Actions taken to resolve problems with incoming samples are documented (see Section 13, Corrective Action).

Sample custody at the laboratory is documented on the Laboratory Tracking Sheet, which is completed by the Sample Receiving Group for each batch of samples received. The use of this laboratory form is discussed in SOP REC-7.

5.3 Sample Receipt

The laboratory has a specifically designated area for sample receipt. Samples are received during normal business hours, on Saturday mornings and at other times by special arrangements. Sample receiving procedures are defined in SOPs. These procedures include completion of a cooler receipt log (SOP REC-5), and sample log-in (SOP REC-7). Personal safety items such as lab coats, gloves, fume hoods and eye protection are provided to the sample receiving staff for their protection. Refer to the specific laboratory SOP for further detail.

5.3.1 Sample Acceptance Policy

En Chem's written sample acceptance policy, SOP GEN-30, requires the following:

- Proper, full, and complete documentation, including the sample identification, the location, date, and time of collection, collector's name, preservation type, sample type and any special remarks concerning the sample;
- Unique identification of samples using durable labels completed in indelible ink;
- Use of appropriate sample containers.;
- Receipt within holding times;
- Adequate sample volume; and
- Procedures to be used when samples show signs of damage or contamination.

Samples, which do not meet the acceptance criteria, must be documented on a Sample Entry Nonconformance Memo (SOP GEN-15). These memos are routed to the En Chem Project Manager of the project for resolution with client project staff. Analytical results from non-acceptable samples shall be qualified or otherwise explained in the laboratory report.

5.4 Sample Storage

The primary considerations for sample storage are proper temperature as specified by method requirements and the completion of extraction and analysis within the specified holding times. Sample receiving personnel are responsible for ensuring that samples are initially properly stored.

Samples stored in a particular refrigerator, freezer, or other storage area shall be recorded in a logbook for that storage area. Documentation of sample storage is provided on the Laboratory Tracking Sheet (See Appendix I), which must be completed for each sample batch.

To minimize the possibility of contamination all samples for volatile organics are segregated in a refrigerator specifically designated for these samples. A second volatiles refrigerator is used to segregate known high level samples, or those with a noticeable odor at the time of receipt.

All samples, sample fractions, extracts, leachates, or other sample preparations shall be stored according to the conditions listed in the authoritative test method. These conditions are detailed in the specific method SOP's.

5.5 Sample Disposal

Samples may be completely consumed during analysis, returned to the client or sampling location, or stored under appropriate environmental conditions if re-analysis is anticipated. Ambient storage is used if re-analysis is not likely. Samples and extracts are disposed of not earlier than thirty days after issuance of the final report unless otherwise specified. Samples are placed into long-term storage following analysis, or returned to the client if required by the project.

Sample containers are emptied and disposed in accordance with the State of Wisconsin Chapters NR 500-522 and NR 610. Containers will be crushed and labels will be removed or defaced at the request of our clients.

The En Chem Madison facility is classified as a small quantity waste generator by the USEPA. Disposal of all samples, hazardous and non-hazardous, is performed in accordance with all applicable local, state, and federal environmental regulations. Some non-hazardous wastes may be disposed of in a sanitary sewer as permitted by 40 CFR 261.3 (a),(2),(iv). Hazardous wastes as defined under 40 CFR 261 are stored in designated locations in the laboratory according to EPA standards.

EnChem has an agreement with a licensed hazardous waste shipper to pack, test, and ship the hazardous waste approximately every four weeks. Hazardous wastes are shipped to licensed waste disposal facilities for disposal. EnChem receives a Certificate of Disposal for all disposed material. All documents related to waste management are maintained on file in the laboratory.

6.0 CALIBRATION PROCEDURES AND FREQUENCY

Instruments and equipment used to generate data shall be calibrated with sufficient frequency, and in such a manner that accuracy and reproducibility of results are consistent with the manufacturer's specifications. Calibration may be of two types: operational calibration which occurs before instrument, or periodic calibration which occurs at prescribed intervals. This section describes procedures for maintaining the accuracy of all instruments and measuring equipment that are used for conducting laboratory analyses.

6.1 Traceability of Calibration

The calibration of analytical equipment and instruments shall be traceable to the National Institute of Standards and Technology (NIST).

6.2 NIST Traceable Reference Standards

Physical standards used to verify laboratory equipment in used in the labs shall be traceable to nationally recognized standards such as the NIST. The reference standards shall be administered by the Quality Assurance officer. Reference standards must be re-certified according to the expiration dates on the certificate for each standard. If no expiration date is specified a time period of three years shall be used.

Chemical reference standards that are purchased from commercial vendors shall be traceable to the NIST. Calibration certificates that accompany standard materials when received in the laboratory are maintained on file in the laboratory.

6.3 General Requirements

Each operational calibration shall be supported by documentation indicating calibration date, method, instrument, analyst, analysis date, analyte, concentration and response (or response factor). Sufficient information must be recorded to permit reconstruction of the calibration. Acceptance criteria for calibrations comply with method references or QAPP requirements. This documentation is referenced in, or kept with, data files or analytical log books.

NOTE: Separate records are kept for periodic calibration. These items shall be filed and archived by the laboratory QA Officer.

6.4 Analytical Support Equipment

Analytical support equipment includes: balances, ovens, refrigerators, freezers, incubators, water baths, temperature measuring devices and volumetric dispensing devices. If quantitative results are dependent on their accuracy, as in standard preparation and dispensing or diluting procedures, then all such support equipment is maintained in proper working order. The records of all maintenance including service calls shall be recorded in the equipment maintenance log or filed with the QA Officer.

Calibration is verified at least annually, using NIST traceable references when available, over the entire range of use. The results of such calibration must be within the specifications required of the application for which is equipment is used. Noncompliant equipment is removed from service until repaired.

Any equipment which is not calibrated at least annually must be clearly labeled as 'Not Calibrated', such as an oven which is only used to dry glassware. Equipment which is not in use shall be clearly labelled as such.

6.4.1 Temperature Monitoring

Each working day, the temperatures of ovens, refrigerators, freezers, and water baths are checked with calibrated thermometers which are traceable to NIST references. The temperatuers of these units are recorded in the logbook which contains the acceptance limits for that unit. SOP's LAB-12 and LAB-13 describe these procedures and corrective action for noncompliance.

All therometers used in the laboratory shall be verified with a NIST traceable thermometer, in the range of use, prior to being used in ite laboratory and once annually thereafter. Each thermometer shall contain a calibration tag which identifies the thermometer with a unique number and shows the date which reverification is due. The procedure for calibration verification is available in SOP LAB-10.

6.4.2 Balances

Laboratory balances shall be checked with Class 'S' weights traceable to NIST standards, which bracket the range of use, each day prior to use. The calibration check shall be recorded in the logbook which contains the acceptance limits for that unit. SOP LAB-26 describes this procedure and corrective action.

All balances are serviced and calibrated two times each year by an external service provider. A calibration sticker is attached to each balance which identifies the service contractor, and contains the serial number of the balance, the calibration date, and the date that recalibration is due. Records of this balance calibration shall be maintained by the QA Officer.

6.4.3 Volumetric Dispensing Devices

Mechanical volumetric dispensing devices are checked for accuracy monthly as described in laboratory SOP LAB-1.

6.5 Instrument Calibration

Analytical instrument calibration consists of measuring a standard response or preparing a standard calibration curve.

Detailed initial and continuing calibration procedures for specific laboratory instruments are documented in specific instrument SOPs. The SOP for each method performed in the laboratory describes the calibration procedures, their frequency, acceptance criteria, and the conditions that require recalibration. The analyst is required to perform and document the calibration procedure prior to sample analysis.

In all cases, the initial calibration shall be verified using an independently prepared calibration verification solution. Calibration records are documented on the raw data or in the logbook for each instrument. At a minimum the following information shall be recorded or referenced in the logbook: instrument identification, calibration date, analyst, calibration solutions/concentrations analyzed.

6.5.1 Limited Calibration Procedures

The use of a limited calibration procedure is allowed on a project specific basis for unusual, non-routine compound analysis. In this case, the laboratory may run one or two standards in order to establish a retention time, determine instrument response, and establish a reporting limit. The use of limited calibration must be discussed with the client by the Project Manager prior to initiation of the project. The approval to proceed with a limited calibration for a project shall be documented in the project file by the Project Manager. The use of such procedures shall be included in the final report or accompanying case narrative.

7.0 TEST METHODS AND STANDARD OPERATING PROCEDURES

En Chem maintains Standard Operating Procedures (SOPs) that accurately reflect all test methods, assessment of data integrity, corrective actions, and handling customer complaints. The primary purpose of a Standard Operating Procedure (SOP) is to provide a "How to" document which laboratory personnel can use to perform various routine laboratory operations. SOPs are prepared and used to minimize the introduction of random and systematic errors by ensuring that all personnel use the same procedure when performing a specific operation. SOPs also act as a training guide for new personnel.

Each SOP indicates the effective date, the revision number, and the appropriate signature(s).

7.1 SOP Preparation and Organization

Laboratory SOP GEN -1, Preparation of Standard Operating Procedures, defines the format, identification, and control of SOPs. All SOP's shall be reviewed annually for any needed revisions.

7.2 SOP Control and Distribution

SOPs, which are located throughout the laboratory, are printed on paper with a red header signifying that the copy is a controlled document. The controlled copies shall be issued and distributed by the QA Officer or a designee. Each laboratory area has copies of the appropriate SOPs pertaining to that work area. The SOPs shall be accessible to all personnel in their immediate work areas.

Uncontrolled copies of SOPs may be sent to clients for inclusion in workplans, etc. These uncontrolled copies are photocopies of the controlled SOPs that do not have the red header, and are therefore easily identified as uncontrolled copies.

7.3 SOP Archival

When an SOP is revised, the original of the previous revision shall be archived by the QA Officer. These archived SOPs shall be retained indefinitely for future reference. The archive is maintained in a locked file cabinet for future reference.

7.4 SOP Formats for Test Methods

Procedures describing how analyses are actually performed in the laboratory are specified in method SOPs. SOPs for sample preparation, cleanup, and analysis are based on literature references published by the US-EPA, ASTM, and other organizations and on internally developed methods validated according to EPA's Performance-Based Measurement System. Examples of items included or referenced in a Method SOP include:

1) Identification of the test method.
2) Applicable matrix or matrices.
3) Method detection limit.
4) Scope and application, including components to be analyzed.
5) Summary of the method.
6) Definitions.
7) Interferences.
8) Safety.
9) Equipment and supplies.
10) Reagents and standards.
11) Sample collection, preservation, shipment and storage.
12) Quality control.
13) Calibration and standardization.
14) Procedure.
15) Calculations.
16) Method performance.
17) Pollution prevention.
18) Data assessment and acceptance criteria for quality control measures.
19) Corrective actions for out-of-control data.
20) Contingencies for handling out-of-control or unacceptable data.
21) Waste management.
22) References.
23) Any tables, diagrams, flowcharts and validation data.

7.5 Laboratory SOP Listing

A complete listing of En Chem Madison SOPs are located in Appendix J.

7.6 Deviations From Laboratory SOP

Deviations from laboratory SOP may occur as part of a planned process such as a project work plan which specifies added or altered procedures to improve method performance in samples from that site. In this case the deviations shall be included in the case narrative for that project. Unplanned deviations from SOP's, such as an oversight by staff, shall be documented on a nonconformance memo. See Section 13, and En Chem SOP GEN -15. These deviations shall be included in the final report or accompanying case narrative.

8.0 INTERNAL QUALITY CONTROL CHECKS

8.1 Laboratory Quality Control Samples

The data acquired from QC procedures are used to estimate the quality of analytical data, to determine the need for corrective action in response to identified deficiencies, and to interpret results after corrective action procedures are implemented. Each method SOP includes a QC section which addresses the minimum QC requirements for the procedure. The internal QC checks may differ slightly for each individual procedure but in general are described below. The acceptance limits and corrective actions for these QC checks are described in Section 12 and 13 of this manual.

8.1.1 Blanks

a) Method Blank

A method blank is a blank of appropriate analyte-free matrix that is processed (digested, extracted, etc.) and analyzed with a specified sample set. The purpose of the method blank is to verify that interferences caused by contaminants in the solvents, reagents, glassware, etc. are known and minimized. Method blanks are performed at a frequency of one per batch of 20 samples or less, per matrix type, per sample preparation whichever is more frequent. The method blank is processed through all clean-ups, etc., which were performed on the samples in the batch. Method Blank results are used to determine batch acceptance. Acceptance criteria are presented in Section 12.4.

b) Trip Blank - Volatile Organics

Trip Blanks are routinely supplied and analyzed for volatile organics. Trip blanks are necessary because volatile organics samples are susceptible to contamination by diffusion of organic contaminants through the Teflon-faced silicon rubber septum of the sample vial. Trip Blanks are prepared by filling two 40-mL VOA vials with organic free water. These vials are then shipped with the field kit, and follow the sample bottles through the field collection and return shipment to the laboratory. Trip blanks are analyzed and reported in the same manner as samples.

c) Other Blanks

Other types of field quality control blanks, such as field and rinsate blanks are analyzed and reported in the same manner as samples.

8.1.2 Spiked Laboratory Control Samples

a) Laboratory Control Samples (LCS)

A laboratory control sample consists of a control matrix which has been spiked with the analytes(s) of interest or compounds representative of those analytes. Laboratory Control Samples are analyzed at a minimum of 1 per batch of 20 or fewer samples per matrix type per sample extraction or preparation method. Results of the LCS are expressed in terms of percent recovery, and are used to determine batch acceptance. Acceptance limits are established based on in-house data. Table1 of Section 12 provides interim limits for use prior to calculation of in-house limits.

Tests for which no spiking solutions are available, or spiking is not applicable, a purchased Quality Control Sample will be used in place of the LCS described above. In these cases the acceptance limits provided by the manufacturer will be used. Some examples of these tests include, total suspended solids, total dissolved solids, and total volatile solids.

b) Laboratory Control Sample Duplicates (LCSD)

A second LCS which is used to evaluate laboratory precision when adequate sample is not supplied by the client to perform a Matrix Spike/ Matrix Spike Duplicate. The Relative Percent Difference (RPD) will be calculated between the LCS and LCSD and the value evaluated against in-house control limits. The LCSD must also meet the criteria for the LCS.

8.1.3 Spiked Samples

a) Matrix Spikes (MS)

Matrix spikes are performed to evaluate the effect of the sample matrix upon analytical methodology. A separate aliquot of sample is spiked with the analyte of interest and analyzed with the sample. Matrix spikes are performed at a minimum frequency of one in 20 samples (5%) per matrix type per sample extraction or preparation method for SW 846 methods. The frequency for 600 series methods is 10%. Matrix spike recoveries are evaluated against in-house control limits. Specific corrective actions for samples recoveries outside of established control limits are provided in the method SOPs. Poor performance in a matrix spike generally indicates a problem with the sample composition, and not the laboratory analysis, and results are used to assist in data assessment.

For analytes which spiking solutions are not available, such as total suspended solids, total dissolved solids, total volatile solids, total solids, pH, color, or turbidity, a matrix spike is not performed. In these cases a duplicate analysis is perfromed.

b) Matrix Spike Duplicates (MSDs)

A separate sample aliquot is spiked with the analyte(s) of interest and analyzed with the associated sample and sample matrix spike. Matrix spike duplicates are performed along with matrix spikes at the same frequency. Matrix spike duplicates are are evaluated for accuracy in the same manner as matrix spikes. In addition, the Relative Percent Difference (RPD) will be calculated between the MS and MSD. If the RPD is outside of the established control limits, the sample data shall qualified and all QC data will be carefully evaluated to determine if remedial action is required.

c) Surrogate Spiking (SS)

Surrogate compounds are added to all samples, standards, and blanks for all organic chromatography test methods except when the matrix precludes its use or when a surrogate is not available. Surrogate recoveries are evaluated against in-house control limits. Specific corrective actions for samples with surrogates outside of established control limits are provided in the method SOPs. Poor surrogate recovery generally indicates a problem with the sample composition and is reported to assist in data assessment. Data shall be qualified for surrogates that do not meet established control limits.

8.1.4 Other QC Samples

a) Duplicate Analysis

Duplicate analysis may be used to calculate the precision (relative percent difference) of an analysis in cases where the levels of analyte is sufficiently above the EQL, or a spike of the analyte is not possible, i.e. TSS. Frequency of duplicate analyses may be either one sample per similar matrix group of 10 or one sample per group of 20, depending on choice of methodology. If the RPD is outside of the established control limits, the sample data shall qualified and all QC data will be carefully evaluated to determine if remedial action is required.

b) Serial Dilution

For ICP metals analysis, a serial dilution is performed on each batch of 20 samples or less. The parent sample is diluted by a factor of 5, and the result must agree within 10% of the original sample concentration. Any results that are greater than 10% will require a flag on the sample result indicating an estimated concentration due to a chemical or physical interference.

c) Recovery Test

For the recovery test, one sample is spiked with a known amount of the analyte of interest and analyzed. The percent recovery must be within the range of 85-115. If the recoveries are outside of that range subsequent dilutions are performed. If recoveries remain outside of the acceptable range then all samples in the digestion group are diluted and qualified.

8.1.5 Spike Components for Organic Analysis

All reportable components are in the spike mixes. However, in cases where the components interfere with accurate assessment (such as simultaneously spiking chlordane, toxaphene and PCBs in Method 608), the test method has an extremely long list of components (such as Method 8270) or components are incompatible, a subset of the listed components are used.

8.1.6 Standard Reference Material Analysis

Standard reference materials, such as those available from the National Institute of Standards and Technology, are analyzed on a project specific basis and used in association with laboratory control spike data to evaluate the method performance .

8.2 Method Detection Limits

Method detection limits (MDL) are determined by 40 CFR Part 136, Appendix B. Method Detection Limits are updated as deemed necessary by the Group Leader or QA Officer, but no less than once per year.

An MDL study is not performed for any component for which spiking solutions are not available such as total suspended solids, total dissolved solids, total volatile solids, total solids, pH, color, dissolved oxygen, or turbidity. For these types of analytes, the detection limit is based on a signal to noise ratio from a the analysis of QC check samples or calibration standards. The detection limit for gravimetric tests is based on the analysis of seven replicates of a purchased QC sample. Alternativly, the detection limit may be based on the lowest reading of the balance used to perform the analysis.

b) The method detection limit is initially determined for the compounds of interest in each method in laboratory pure reagent water or Ottawa sand. For the biological matrix, canned tuna fish is used.

c) En Chem has adopted standard Estimated Quantitation Limits (EQLs). For organic analyses this is equivalent to the lowest calibration standard in the calibration curve. For

inorganic analyses the EQL is set at a point where acceptable precision can be obtained. Reporting Limits are a function of project planning and may be modified for a specific project. Deviations from standard reporting limits must be approved by laboratory management and communicated to laboratory staff prior to project start-up.

8.3 Selectivity (Organics analysis)

a) Absolute and relative retention times aid in the identification of components in chromatographic analyses and help evaluate the effectiveness of a column to separate constituents. Acceptance criteria for retention time windows are documented in each method SOP.

b) A confirmation on a column of dissimmilar phase is performed to verify a compound identification when positive results are detected for GC analysis. Such confirmations are performed on organic tests except when the analysis involves the use of a mass spectrometer.

8.4 Demonstration of Method Capability

Prior to acceptance and use of any method, satisfactory initial demonstration of method performance is required. It is the responsibility of the Groupleader of the section in which the method is performed to see that this activity is completed. This initial demonstration of method performance shall be performed each time there is a significant change in instrument type, personnel or test method. Upon completion of the initial validation a certification statement is completed for each analyst documenting that this activity has been performed. The procedure used and the certification statement is found in Appendix B.

8.5 Solvent, Reagent, and Adsorbent Check Analysis

Method blanks are extracted/prepared and analyzed with each sample batch for all methods in order to validate the purity of all reagents and solvents used in the procedure.

Each lot of Florisil is validated and the results are retained on file. A lot of Florisil cartridges is acceptable if all pesticide recoveries are 80-120%, if the trichlorophenol recovery is less than 5%, and if no peaks interfering with target analytes are detected. If this clean-up procedure is used, all sample extracts in the batch, including the method blank and laboratory control samples, are subjected to the cleanup procedure.

The GPC is calibrated weekly to obtain a UV trace showing a discrete peak for each component. The peaks should be symmetrical for all compounds in the calibration

solution. The corn oil and phthalate peaks must exhibit greater than 85% resolution. The phthalate and methoxychlor peaks must exhibit greater than 85% resolution. The methoxychlor and perylene peaks must exhibit greater than 85% resolution. The perylene and sulfur peaks must not be saturated and must exhibit greater than 90% baseline resolution. If this clean-up procedure is used, all sample extracts in the batch, including the method blank and laboratory control samples, are subjected to the cleanup procedure.

9.0 DATA REDUCTION, REVIEW, REPORTING AND RECORDS

9.1 Data Reduction and Review

Data resulting from the analyses of samples is reduced according to protocols described in the laboratory SOPs. All information used in the calculations (e.g., raw data, calibration files, tuning records, results of standard additions, interference check results, sample response, and blank or background-correction protocols) are recorded in order to enable reconstruction of the final result at a later date. Information on the preparation of the sample (e.g., weight or volume of sample used, percent dry weight for solids, extract volume, dilution factor used) is maintained in bound logbooks in order to enable reconstruction of the final result at a later date.

All data are reviewed by a second analyst or supervisor according to laboratory procedures to ensure that calculations are correct and to detect transcription errors. The results of all quality control sample analyses are reviewed, and evaluated before data are approved for reporting. Laboratory SOP GEN-6 documents procedures for data reduction, review, validation, and reporting. Errors detected in the review process are referred to the analyst(s) for corrective action.

Spot checks are performed on computer calculations to verify program validity. Computer programs used for data reduction are validated before use and verified regularly.

9.2 Report Format and Contents

The results of each test, or series of tests, are reported in a Certificate of Analysis and include all the information necessary for the interpretation of the results.

Each report includes:
1) the title "Certificate of Analysis".
2) name and address of laboratory, and phone number with name of contact person.
3) a unique identification number and the total number of pages, with all pages sequentially numbered.
4) name of client.
5) description and unambiguous identification of the sample(s) including the client identification code.
6) identification of results for any sample that did not meet sample acceptance requirements.
7) identification of the test method used.

8) any deviations from, additions to or exclusions from SOPs, and any conditions that may have affected the quality of results, and including the use and definitions of data qualifiers.
9) measurements, examinations and derived results, supported by tables, graphs, sketches and photographs as appropriate, and any failures identified; identification of whether data are calculated on a dry weight or wet weight basis; identification of the reporting units such as ug/l or mg/kg.
10)clear identification of all test data provided by outside sources, such as subcontracted laboratories, clients, etc.
11) clear identification of numerical results with values below the Reporting Limit.

Exceptions to this standard approach for reporting are allowed with approval of a Technical Director and are documented with a nonconformance memo.

Material amendments to a test report after issue are made only in the form of a further document, or data transfer including the statement "Supplement to Test Report, identification number."

Clients are notified promptly, in writing, of any event such as the identification of defective measuring or test equipment that casts doubt on the validity of results given in any test report or amendment to a report.

Test results are certified to meet all requirements of the NELAC standards, or reasons are provided if they do not.

9.2.1 Data Deliverable Levels

The results of quality control samples, instrument raw data, etc. may be reported if requested on a project specific basis. The content of these reports may range from a summary of quality control sample results, to a fully validated stand alone document containing all raw data and supporting documentation. These requirements should be discussed with the En Chem Project Manager. The level of QC deliverables is determined by project requirements and must be specified at the time that the samples are submitted to the laboratory. Deliverable formats are presented in SOP GEN-21.

9.3 Records

Laboratory records provide the direct evidence and support for the necessary technical interpretations, judgments, and discussions concerning laboratory results. All records shall be recorded in ink, be legible, identifiable, and retrievable, and protected against damage, deterioration, or loss. All laboratory records from time of sample receipt

through data reporting and sample disposal shall be available if requested by clients or an authorized regulatory agency or court. All records referenced in this section are retained for a minimum of ten years. The hardware and software necessary to access any data stored electronically shall also be maintained. Storage for longer periods is available and should be discussed with the En Chem project manager prior to initiation of the project. Laboratory policies for record creation and archival are included in En Chem SOP's GEN-4 and GEN-25.

Laboratory records are stored off-site under contract with Datakeep, Inc. Datakeep is an insured document and media storage provider located in Madison, Wisconsin, and offers security, temperature and humidity control of all records that are placed in their control.

9.3.1 General Laboratory Operations Records

The following records shall be maintained:

- Master Sample Log - A chronological paper or computerized record of samples is maintained. This documentation is completed by the Sample Receiving Group.

- Calibration Records & Traceability of Standards/Reagents -- The frequency, conditions, standards, and records reflecting the calibration history of a measurement system are recorded.

- Instrument Maintenance Logs - A separate log is maintained for each instrument listing all maintenance and calibration performed in-house or by outside groups. These logs are maintained during the instrument lifetime and then archived.

- Performance Evaluation Records - Copies of all PE results and any associated corrective actions are maintained by the QA Officer.

- Certification Program Records - Records are maintained of all correspondence, analytical data, agency results and certification of performance from all certification programs.

- Purchased Material Certificates - Information which verifies that purchased materials meet the requirements of the laboratory are maintained in the laboratory.

- Audit Records - Audit reports and responses for both internal and external audits are maintained by the QA Officer.

- Computer Software Verification - Separate record of the data used to verify each software package are maintained in the laboratory.

- Periodic Calibration Records - Information on periodic calibration, i.e., thermometer and weight set calibration, are maintained by the QA Officer.

- Nonconformance Records - A copy of all nonconformance reports are maintained. Completed nonconformance memos are included in the project file.

- Instrument Run Log - A list of samples run on each instrument is maintained in the logbooks designated for that purpose.

- Standard Operating Procedures - A file of current and historical laboratory SOPs with issue dates is maintained.

- Administrative Records -- The following are maintained:
  a) Personnel qualifications, experience and training records;
  b) Initial and continuing demonstration of proficiency for each analyst; and
  c) A log of names, initials and signatures for all individuals who are responsible for signing or initialing any laboratory record.

9.3.2 Sample Specific Records

- Sample Management -- A record of all procedures to which a sample is subjected while in the possession of the laboratory is maintained. These include records pertaining to:
  a) Sample identification, receipt, acceptance or rejection and log-in;
  b) Sample preservation including appropriateness of sample container and compliance with holding time requirement;
  c) Sample storage and tracking including shipping receipts, transmittal forms, and internal routing and assignment records;
  d) Disposal of hazardous samples including the date of sample or subsample disposal and name of the responsible person;

- Original Data -- The raw data and calculated results for all samples is maintained in laboratory notebooks, logs, benchsheets, files or other sample tracking or data entry forms. Instrument output is stored in a computer file or a hard copy report. These records include:

a) Laboratory sample ID code.
b) Date of analysis.
c) Instrumentation identification and instrument operating conditions/parameters;
d) Analysis type and sample preparation information, including sample aliquots processed, cleanup, and separation protocols.
e) All manual , automated, or statistical calculations.
f) Confirmatory analysis data, when required to be performed.
g) Review history of sample data.
f) Analyst's or operator's initials/signature.

- QC Data -- The raw data and calculated results for all QC samples and standards are maintained in the manner described in the preceding paragraph. Documentation allows correlation of sample results with associated QC data. Documentation also includes the source and lot numbers of standards for traceability. QC samples include, but are not limited to, control samples, method blanks, matrix spikes, and matrix spike duplicates.

- Correspondence -- Correspondence pertinent to a project is maintained in the project files.

- Deviations -- Records of all deviations from SOPs. Deviations are reviewed and approved by the QA Officer or Technical Director through the use of a nonconformance memo.

- Final Report -- A copy of any report issued and any supporting documentation.

9.4 Document Control System

A document control system, under the direction of the QA Officer, is used to ensure that all staff have access to current policies and procedures at all times. Documents which are managed by this system include this Quality Manual and all SOPs. The policy for laboratory document control, distribution, receipt, return, and accessability is maintained in SOP GEN-2.

All quality documents (this Manual, SOPs, policies, etc.) are reviewed and approved by the QA Officer, the Technical Directors and the Laboratory Director. A system for SOP and QAM review, revision and approval is documented in SOP GEN-8. Such documents are revised whenever the activity described changes significantly. All documents are reviewed at least every 3 years.

9.5 Confidentiality

All information related to a project, such as laboratory results, associated raw data, product information, processes, designs or strategies are kept in confidence to the customer who requested the analyses. This policy is documented in SOP GEN-23. Access to laboratory records and LIMs data is limited to laboratory personnel except with the permission of the QA Officer or Laboratory Director. NELAP-related records are made available to authorized accrediting authority personnel.

Where clients require transmission of test results by telephone, facsimile or other electronic means, staff will ensure confidentiality is preserved. Copies of all information related to specific samples that is sent to, or received from, clients shall be maintained in the project file for that batch number.

10.0 PERFORMANCE AND SYSTEM AUDITS AND FREQUENCY

10.1 Internal Laboratory Audits

Annual internal audits are performed by the QA Officer to verify that laboratory operations continue to comply with the requirements of the quality system. Where the audit findings cast doubt on the correctness or validity of the laboratory's results, an immediate corrective action is initiated and any client whose work may have been affected is notified.

The internal system audits include an examination of laboratory documentation on sample receiving, sample log-in, sample storage, chain-of-custody procedures, sample preparation and analysis, instrument operating records, etc. Internal audits are conducted according to the procedures and schedule included in SOP QAU-1.

10.2 Performance Audits

Proficiency test samples are analyzed two times per year from a NIST-approved PT provider for all analytes and matrices, as applicable. Additional samples, such as make-up samples to demonstrate corrective action, may be ordered from another approved PT provider at the discretion of the QA Officer.

In addition, the laboratory performs the following QC practices to monitor the quality of the laboratories analytical activities:

a) A minimum of three rounds of internal performance evaluation samples which are purchased from an outside vendor. Additional full or partial rounds may be analyzed at the discretion of the QA Officer.

b) Use of certified reference materials where applicable.

10.3 Managerial Review

At least once per year, laboratory management conducts a review of the quality system to ensure its continuing suitability and effectiveness and to introduce any necessary changes or improvements in the quality system and laboratory operations. The review takes account of reports from managerial and supervisory personnel, the outcome of recent internal audits, assessments by external bodies, the results of proficiency tests, any changes in the volume and type of work undertaken, feedback from clients,

corrective actions and other relevant factors. Documentation of the Management Review Meeting is maintained on file by the QA Officer.

11.0 FACILITIES, EQUIPMENT, REAGENTS, AND PREVENTATIVE MAINTENANCE

11.1 Equipment and Reference Materials

A listing of laboratory instrumentation is provided in Appendix F.

Records are maintained for all major equipment and all reference materials significant to the tests performed. These records include documentation on all routine and non-routine maintenance activities and reference material verifications.

The records include:
1) the name of the equipment;
2) the manufacturer's name, model identification, and serial number or other unique identification;
3) date received and date placed in service (if available);
4) current location, where appropriate;
5) if available, condition when received (e.g. new, used, reconditioned);
6) copy of the manufacturer's instructions, where available;
7) dates and results of calibrations;
8) details of maintenance carried out to date and planned for the future; and
9) history of any damage, malfunction, modification or repair.

11.1.1 Glassware Cleaning

Glassware is cleaned to meet the sensitivity of the method. Laboratory SOPs are available for cleaning glassware for each type of analysis performed in the laboratory, i.e. metals, semivolatile organics, volatile organics, wet chemistry. The SOP for each type of glassware must be posted in the immediate area in which the glassware is cleaned.

11.2 Documentation and Labeling of Standards and Reagents

Records shall be kept for all standards, including the manufacturer/vendor, the manufacturer's Certificate of Analysis or purity (if supplied), the date of receipt, recommended storage conditions, and an expiration date. Standards, which have aged beyond the stated expiration date, must be clearly labeled as expired and cannot be used for reportable analyses. Bound logbooks are maintained to document reagent and standard preparation. These records indicate traceability to purchased stocks or neat compounds, a description of reference to the method of preparation, date of preparation, expiration date and preparer's initials. This requirement is documented in SOP LAB-22.

Original containers provided by the vendor are labeled with an expiration date if one does not exist.

All containers of prepared reagents and standards shall bear a unique identifier and expiration date and are linked to the documentation requirements above.

1) Reagents - In methods where the purity of reagents is not specified, analytical reagent grade shall be used. Reagents must meet the minimum purity requirements specified by the method. For items that are not routinely ordered, the labels on the containers are checked to verify that the purity of the reagents meets the requirements of the particular method. Manufacturers lot numbers of all solvents and reagents are recorded in preparation logbooks

2) Water - The quality of reagent water sources is monitored and documented to meet method specified requirements. The specific tests performed to verify reagent water acceptability are documented in laboratory SOP LAB-15.

11.3 Computers and Electronic Data Related Requirements

Where computers or automated equipment are used for the capture, processing, manipulation, recording, reporting, storage or retrieval of test data:

- Computer software is documented to be adequate for use.
- Procedures are established and implemented for protecting the integrity of data.
- Computer and automated equipment are maintained to ensure proper functioning.
- Appropriate procedures are used for the maintenance of security of data including the prevention of unauthorized access to, and the unauthorized amendment of, computer records. This includes the use of passwords and security levels for all staff. The security of the computer systems is the responsibility of the system administrator.

11.4 Preventative Maintenance

Preventive maintenance is performed to ensure proper instrument and equipment performance and to minimize the occurrence of instrument and equipment failure during use. Factors considered when scheduling or performing preventive maintenance include: instrument type, equipment and parts that are subject to wear, deterioration or other changes in operational characteristics, spare parts that should be available to minimize downtime, and the frequency that maintenance is required. Maintenance

must be performed when instrument performance begins to deteriorate as made evident by calibration failure, loss of sensitivity, or failure to meet quality control criteria.

Major equipment in the laboratory may either be covered under manufacturer service contacts or serviced by trained En Chem staff. Manufacturer service technicians or En Chem staff performs periodic preventive maintenance. The analyst responsible for the instrument performs daily or routine preventive maintenance. Group leaders and section supervisors will monitor this activity. An adequate supply of consumable parts and hardware will be maintained to ensure continued instrument operation.

11.4.1 Documentation of Preventative Maintenance

Each instrument will have a maintenance log that is kept by the instrument. All maintenance must be documented; this includes maintenance performed by instrument manufacturer, and service technicians, as well as routine maintenance performed by the analyst. The analyst shall be responsible for maintaining documentation. The record of maintenance will note any parts replaced as well as observations made.

11.5 Inspection/Acceptance Requirements for Supplies and Consumables

Labels indicating the following information on receipt and testing shall be used for critical supplies and consumables.

- Unique identification number (if not clearly shown).
- Date received.
- Date opened.
- Expiration date.

12.0 SPECIFIC ROUTINE PROCEDURES USED TO EVALUATE DATA QUALITY

Quality control acceptance criteria are used to determine the validity of the data based on the analysis of internal quality control check (QC) samples (see Section 8.0). The specific QC samples and acceptance criteria are found in the laboratory Quality Control literature. Typically, acceptance criteria are based on published EPA methods for analysis where there is insufficient data to generate limits.

Acceptance criteria for bias are based on the historical mean recovery plus or minus three standard deviation units, and acceptance criteria for precision range from zero (no difference between duplicate control samples) to the historical mean relative percent difference plus three standard deviation units.

Analytical data generated with QC samples that fall within prescribed acceptance criteria indicate the laboratory was in control. Data generated with QC samples that fall outside the established acceptance criteria indicate the laboratory was "out-of-control" for the failing tests. These data are considered suspect and the corresponding samples are reanalyzed or reported with qualifiers.

Many published EPA methods do not contain recommended acceptance criteria for QC sample results. Where no criteria exist, the laboratory uses acceptance criteria established by management policy. In these situations, En Chem uses the following as interim acceptance criteria for recoveries of spiked analytes until in-house limits are developed :

Analysis	LCS/LCSD Targets % Recovery	LCS/LCSD Targets %RPD	MS/MSD Targets % Recovery	MS/MSD Targets %RPD
Metals	80-120	20	75-125 [1]	20 [1]
Wet Chemistry	80-120	20	75-125	20
Volatile Organics	70-130	40	70-130	40
Volatile Gases	50-150	50	50-150	50
Base/neutrals	50-130	40	50-150	40
Acids	20-140	40	20-120	40
Herbicides	40-160	40	40-160	40
Organochlorine Pesticides/PCB's	50-140	40	50-140	40
Carbamate pesticides	70-130	40	70-130	40

The above limits apply to all matricies.
1 Also used for Biota LCS.

12.1 Laboratory Control Samples

A laboratory control sample (LCS) is analyzed with each batch of samples to verify that the accuracy of the analytical process is within the expected performance of the method. The results of the laboratory control sample are compared to acceptance criteria to determine usability of the data. Data generated with LCS samples that fall outside the established acceptance criteria are judged to be out-of-control. These data are considered suspect and the corresponding samples are reanalyzed or reported with qualifiers.

12.2 Matrix Spikes/Matrix Spike Duplicates

Results from MS/MSD analyses are primarily designed to assess data quality in a given matrix, and not laboratory performance. In general, if the LCS results are within acceptance criteria, performance problems with MS/MSD results may either be related to the specific sample matrix or to an inappropriate choice of extraction, cleanup, or determinative methods. If any individual percent recovery in the matrix spike (or matrix spike duplicate) falls outside the designated acceptance criteria, En Chem will determine if the poor recovery is related to a matrix effect or a laboratory performance problem. A matrix effect is indicated if the LCS data are within acceptance criteria but the matrix spike data exceed the acceptance criteria.

12.3 Surrogate Recoveries

Surrogates are exclusively used in organic analyses. Surrogate recovery data from individual samples are compared to surrogate recovery acceptance criteria in the laboratory's Quality Control literature. Samples which fall outside of established control limits are reextracted/reanalyzed, if sample is available, to verify the failure is matrix related. If a matrix effect is confirmed, or reextraction/reanalysis was not possible, the sample results will be qualified.

For sample extracts which are diluted, the surrogate will not be evaluated if the dilution causes the surrogate concentration in the extract to be below the lowest point in the initial calibration. In these cases, the percent recovery will be qualified with a 'D' qualifier and no corrective action required.

12.4 Method Blanks

For a method blank to be acceptable, the concentration shall not be higher than the highest of the following:

- The method detection limit, or

- Five percent of the regulatory limit of concern for that analyte, or
- Five percent of the measured concentraion in a particular sample of interest.

Each sample in the affected batch is assessed against the above criteria to determine if the sample results are acceptable. Any sample associated with an unacceptable blank is reprocessed for analysis or, if reprocessing is not an alternative, the results are reported with appropriate data qualifying codes.

13.0 CORRECTIVE ACTION

Corrective action is the process of identifying, recommending, approving and implementing measures to counter unacceptable performance or out of control QC results that can affect data quality. All out-of-control situations or deviations from SOP must be documented on a nonconformance memo. All En Chem employees are responsible for initiating a nonconformance memo for any situation that deviates from laboratory practice or SOP. Laboratory SOP GEN-15 explains documentation, responsibilities and filing of nonconformance memos.

Nonconformances that may occur during sample receiving review include the following:

- Incomplete/missing sample documentation.
- Unacceptable sample condition.
- Samples received after expiration of sample holding times.
- Improper sample storage.
- Any other situation that might affect data quality.

Nonconformances that may occur during laboratory analysis include the following:

- Instrument failures/problems.
- Incomplete/missing sample documentation.
- Exceeding sample holding times.
- Incorrect sample preparation.
- Wrong analysis method/procedure.
- QC data (blank, spike, duplicate, surrogates, etc.) outside acceptance limits.
- Calibration requirements not met.
- Data recording, transcription or validation errors.
- Any other situation that might affect data quality.

The QA Officer or the Technical Director is responsible for approval of the corrective action on the nonconformance memo. The QA Officer will ensure implementation and documentation of the corrective action.

Corrective actions are performed prior to release of the data from the laboratory. If necessary, a narrative will be provided in the final laboratory report.

13.1 Resolution of Client Complaints

Where a complaint, or any other circumstance, raises doubt concerning the laboratory's compliance with the laboratory's policies or procedures, or with the quality of the laboratory's tests, the laboratory shall ensure that those areas of activity and responsibility involved are promptly audited. Records of the complaint and subsequent actions are maintained in the project file. The laboratory procedure for resolution of client complaints is documented in SOP Gen-29.

14.0 SUBCONTRACTING AND SUPPORT SERVICES AND SUPPLIES

14.1 Subcontracting Laboratory Services

En Chem clients shall be advised prior to any analyses being subcontracted to another laboratory. Any subcontracted work is placed with another NELAC accredited laboratory, where required, for the tests to be performed. Procedures for subcontracting analyses are documented in laboratory SOP REC-4. The following records of all subcontracted analyses are maintained:

- a copy of the subcontracted laboratory's scope or statement of accreditation
- a copy of the report from the subcontracted laboratory
- the notice to the client.

14.2 Outside Support Services and Supplies

En Chem, Inc. uses only those outside support services and supplies that are of adequate quality to sustain confidence in the laboratory's tests. Records of suppliers for support services or supplies required for tests are maintained.

15.0 REFERENCES

NELAC Standards, July 1998

Example NELAC Quality Manual, Catalyst Information Resources, L.L.C., Evergreen, CO

Interim Guidelines and Specifications for Preparing Quality Assurance Project Plans, QAMS-005/80, December 29, 1980, Office of Monitoring Systems and Quality Assurance, ORD, US EPA, Washington, DC 20460.

RCRA QAPP Instructions, US EPA Region 5, Revision: April 1998

ASTM D-5283-92. Generation of Environmental Data Related to Waste Management Activities: Quality assurance and Quality Control Planning and Implementation.

"American National Standards Specification and Guidelines for Quality Systems for Environmental Data Collection and Environmental Technology Programs (ANSI/ASQC E-4)", 1994

EPA 2185 - Good Automated Laboratory Practices, 1995

ISO/IEC Guide 25: 1990. General requirements for the competence of calibration and testing laboratories.

QA/R-2: EPA Requirements for Quality Management Plans, August, 1994

QA/G-4: Guidance for the Data Quality Objectives Process, EPA/600/R-96/055, September, 1994

QA/R-5: EPA Requirements for Quality Assurance Project Plans, Draft - November 1997

QA/G-5: Guidance on Quality Assurance Project Plans, EPA/600/R-98/018, February, 1998

QA/G-6: Guidance for the Preparation of Standard Operating Procedures for Quality-Related Operations, EPA/600/R-96/027, November, 1995

QA/G-9: Guidance for the Data Quality Assessment: Practical Methods for Data Analysis, EPA/600/R-96/084 , January, 1998

Manual for the Certification of Laboratories Analyzing Drinking Water, EPA/570/9-90/008

APPENDIX A

NELAC CERTIFICATION STATEMENT

APPENDIX A: CERTIFICATION STATEMENT

NELAC CERTIFICATION STATEMENT

The applicant understands and acknowledges that En Chem, Inc, is required to be continually in compliance with the National Environmental Laboratory Accreditation Conference (NELAC) standards and shall be subject to the penalty provisions provided therein.

I hereby certify that I am authorized to sign this application on behalf of the applicant/owner and that there are no misrepresentations in my answer to the questions on this application.

En Chem, Inc.
525 Science Drive
Madison, WI 53711

_____	David Turiff	_____
Signature	Laboratory Director/ President	Date
_____	Julie A. Trivedi	_____
Signature	Quality Assurance Officer	Date
_____	(_____)	_____
Signature	Technical Director	Date
_____	Daniel M. Rude	_____
Signature	Technical Director	Date

APPENDIX B

INITIAL DEMONSTRATION OF CAPABILITY/ CERTIFICATION STATEMENT

APPENDIX B: INITIAL DEMONSTRATION OF CAPABILITY

A demonstration of capability (DOC) is made prior to using any test method, and at any time there is a significant change in instrument type, personnel or test method.

All demonstrations are documented using the form in this appendix.

The following steps are performed:

a) A quality control sample is obtained from an outside source. If not available, the QC check sample may be prepared by the laboratory using stock standards that are prepared independently from those used in instrument calibration.

b) The analyte(s) are diluted in, or spiked into, a volume of clean matrix sufficient to prepare four aliquots at a concentration approximately 10 times the method detection limit.

c) The four aliquots are prepared and analyzed according to the test method either concurrently or over a period of days.

d) Using the four results, the mean recovery x and the sample standard deviation (s) of the set (n-1) is calculated for each parameter of interest.

e) For each parameter, s and x are compared to the corresponding acceptance criteria for precision and accuracy in the method (if applicable) or laboratory-generated acceptance criteria (if there is no criteria listed in the method). If all parameters meet the acceptance criteria, the analysis of actual samples may begin. If any one of the parameters exceeds the acceptance range, the performance is unacceptable for that parameter.

f) When one or more of the tested parameters fail at least one of the acceptance criteria, the laboratory repeats the test for all parameters that failed to meet criteria. If repeated failure occurs, locate and correct the source of the problem and repeat the test for all compounds of interest beginning with c).

Demonstration of Capability
Certification Statement

Date:_____

En Chem, Inc.
525 ScienceDrive
Madison, WI, 53711

Analyst(s) Name(s)_____

Matrix: Reagent Water____ Ottowa Sand _____

Method/Analyte(s) _____

We, the undersigned, CERTIFY that:

1. The analysts identified above, using the cited test method(s), which is in use at this facility for the analysis of samples under the National Environmental Laboratory Accreditation Program, have met the Initial Demonstration of Capability (IDC).

2. The test method was performed by the analyst identified above.

3. A copy of the laboratory SOP is available for all personnel on site.

4. The data associated with the IDC are true, accurate, complete and self-explanatory.

5. All raw data(including a copy of this certification form) necessary to reconstruct and validate these analyses have been retained, and, the associated information is well organized and available for review by authorized inspectors.

_____ _____
Technical Director Signature/Date

_____ _____
Quality Assurance Officer Signature/Date

APPENDIX C

ORGANIZATIONAL CHARTS

EN CHEM INC.

En Chem Organizational Reporting Structure

En Chem, Inc.
Madison Laboratory

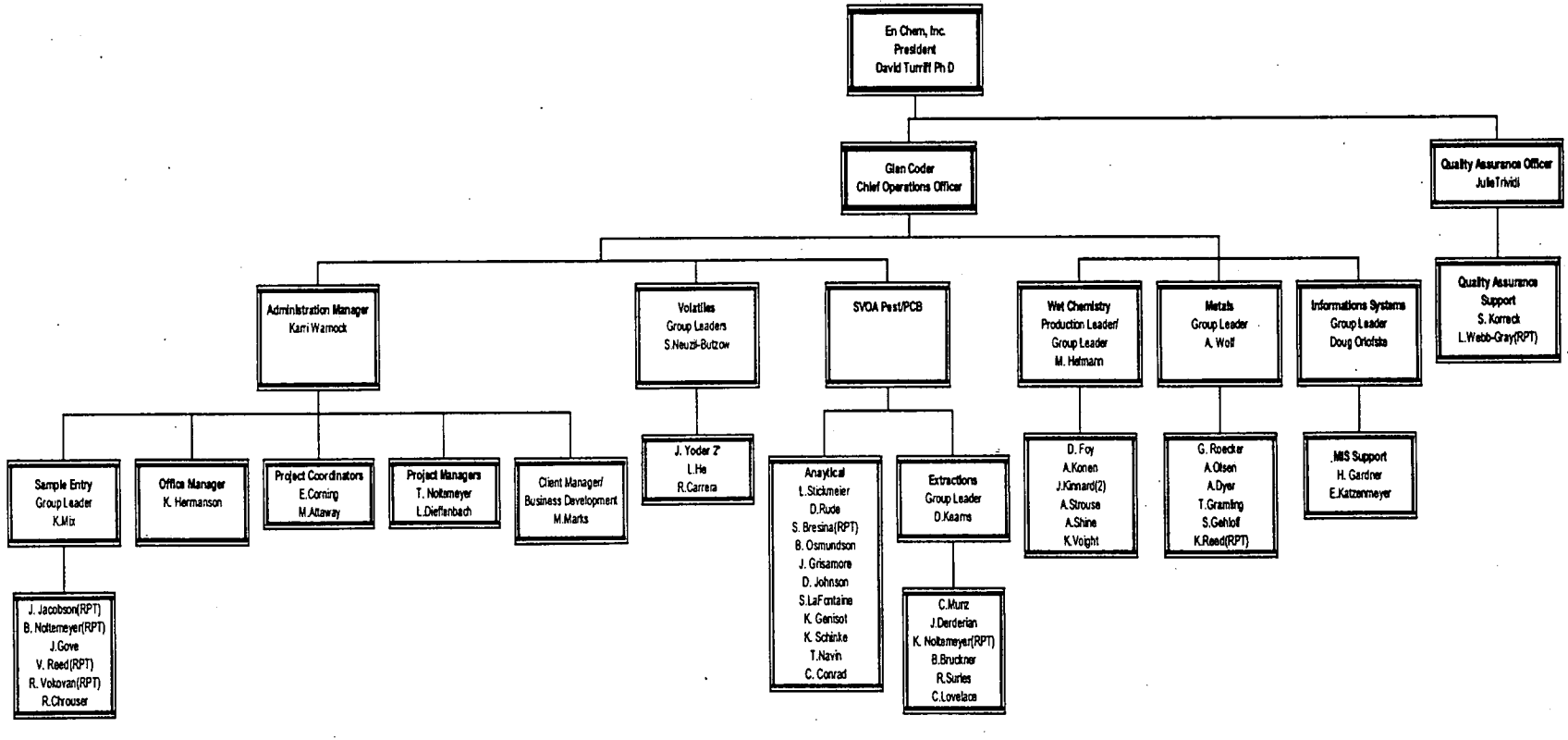

APPENDIX D

PERSONNEL SUMMARY

EN CHEM INC.

En Chem, Inc. employs more than over 55 technical employees who are very qualified to perform the analytical services required. The table below shows titles, academic degrees, and years of experience for laboratory personnel.

Name	Position	Degree	Years of Experience	Location
ADMINISTRATION				
David Turriff, Ph.D.	President	Ph.D. Biochemistry / Neurochemistry	15	Green Bay
Glen Coder	Chief Operations Officer	B.A. Communications	13	Madison
Nils Melberg	Green Bay Analytical Sections Manager	B.S. Water Chemistry	15	Green Bay
Timothy Novoselatz	Green Bay Administrative Sections Manager	B.S. Environmental Science	7	Green Bay
Michael Suha	Quality Assurance (QA) Officer	B.S. Zoology, CHMM	11	Green Bay
Karri Warnock	Madison Administrative Sections Manager	B.S. Animal Science	15	Madison
Julie Trivedi	Quality Assurance (QA) Officer	B.S. Biochemistry	11	Madison
Tom Markee	Operations Manager (Superior Laboratory)	B.S. Chemistry, B.S. Biology	26	Superior
Rob Moore	Chief Financial Officer	B.S. Business Administration	18	Green Bay
Ron Somerhalder	Human Resources Manager	B.S. Mathematics	6	Green Bay
BUSINESS DEVELOPMENT / SALES				
Matt Marks	Business Development	B.S. Chemistry	31	Madison
Barb Rutten	Business Coordinator	Undergraduate Studies	23	Minneapolis (MN)
Mary Christie	Technical Sales and Support	B.S. Chemistry	18	Mosinee (WI)
Linda Gray	Business Coordinator / QA Auditor	B.S. Biology	12	Schaumburg (IL)
Melissa Rycerz	Business / Customer Service Coordinator	B.S. Environmental Biology	4	Schaumburg (IL)
ADMINISTRATIVE SUPPORT				
Kristine Hermanson	Office Manager	H.S. +	9	Madison
Vicki Johnson	Payroll & Benefits Administrator	H.S. +	10	Green Bay
Judy Theys	Purchasing Agent	B.S. Chemistry	12	Green Bay
Ann LeGrave	Administrative Assistant	H.S.	3	Green Bay
Andrea Grygo	Facility Support Assistant	B.S. Biology	2	Superior
INFORMATION SYSTEMS				
Doug Orlofske	Corporate MIS Manager	B.S. Geological Engineering	7	Madison
Heather Gardner	IS Multimedia Specialist	B.A. Journalism	6	Madison
Eli Katzenmeyer	MIS Technician	H.S. +	3	Madison
Lloyd Jacobs	MIS Technician	H.S.	28	Green Bay
John Kirsch	MIS Technician	A.S. Microcomputers	4	Green Bay
Kendall Hull	MIS Technician	M.S. Paper Science and Engineering	3	Green Bay

EN CHEM INC.

Name	Position	Degree	Years of Experience	Location
PROJECT MANAGEMENT				
Tom Trainor	Senior Project Manager	B.S. Chemical Engineering	14	Green Bay
Laurie Woelfel	Project Manager	H.S.	14	Green Bay
Eric Bullock	Project Manager	B.S. Environmental Science	4	Green Bay
Brian Basten	Project Coordinator	H.S.	6	Green Bay
Tod Noltemeyer	Senior Project Manager	B.S. Biology	15	Madison
Lynn Dieffenbach	Project Manager	B.S. Zoology	12	Madison
Michele Attaway	Project Coordinator	H.S.	3	Madison
Ellen Corning	Project Coordinator	H.S.	5	Madison
LABORATORY SUPPORT				
Laura Ikauniece	Group Leader / Sample Receiving	M.S. Environmental Engineering	3	Green Bay
Gloria Doxtator	Laboratory Support Technician	H.S.	12	Green Bay
Dennis Mehlberg	Instrumentation Specialist	B.S. Chemistry	11	Green Bay
Kris Mix	Group Leader / Sample Receiving	B.S. Earth Science	3	Madison
Joel Gove	Laboratory Support Technician	B.A. Anthropology	3	Madison
Ryan Chouser	Laboratory Support Technician	B.A. Zoology	1	Madison
Bill Noltemeyer	Laboratory Support Technician	M.S. General Science B.E.D. Science Education	10	Madison
METALS / INORGANIC CHEMISRTY				
Chad Rusch	Group Leader	B.S. Chemistry	5	Green Bay
Donovan Sielloff	Senior Analyst	B.S. Chemistry	3	Green Bay
Alexandria Wolf	Group Leader	B.S. Biology	3	Madison
Tim Gramling	Technical Lead / Senior Analyst	B.S. Chemistry	15	Madison
Sarah Gehlhoff	Laboratory Analyst	B.S. Chemistry / Environmental Science	3	Madison
Gary Roecker	Laboratory Analyst	B.S. Water Chemistry	16	Madison
Alex Olson	Laboratory Analyst	H.S. +	3	Madison
Andy Dyer	Laboratory Technician	B.S. Biology / Wildlife Management	1	Madison
DATA VALIDATION GROUP				
Suzanne Korreck	Lead QA Auditor	B.S. Microbiology	4	Madison
Jill Duranceau	Lead QA Auditor	B.S. Forestry	13	Green Bay
Arthur Lautenbach	QA Auditor	A.S. Food/Environmental Laboratory Technician	8	Green Bay

EN CHEM INC.

Name	Position	Degree	Years of Experience	Location
SEMIVOLATILE ORGANIC CHEMISTRY				
Randy Naidl	Technical Director / Group Leader	B.S. Chemistry	9	Green Bay
Doug Basten	Laboratory Analyst	B.S. Biology	7	Green Bay
Alan Orr	Laboratory Analyst	B.S. Biology	7	Green Bay
Dan Rude	Senior Analyst	B.S. Chemistry	17	Madison
Bob Osmundson	Laboratory Analyst	B.A. Biology	13	Madison
Kurt Schinke	Laboratory Analyst	H.S. +	11	Madison
Shelley Bresina	Laboratory Analyst	B.S. Biology	6	Madison
Jim Grisamore	Laboratory Analyst	B.S. Biology	9	Madison
Kristen Genisot	Laboratory Analyst	B.S. Cell Biology	7	Madison
Denise Johnson	Laboratory Analyst	B.A. Biology	10	Madison
Chris Conrad	Laboratory Analyst	B.S. Environmental Science	4	Madison
Tim Navin	Laboratory Analyst	B.S. Zoology, B.A.C.	4	Madison
Laurie Stockmeier	Laboratory Analyst	M.S. Botany	5	Madison
Sarah LaFontaine	Laboratory Analyst	B.S. Zoology, B.A.C.	5	Madison
SEMIVOLATILE ORGANIC EXTRACTIONS				
Valerie Renquin	Laboratory Technician	H.S.	5	Green Bay
Janis Ikaunieks	Laboratory Technician	M.S. Chemical Engineering	4	Green Bay
Sonja Stenli	Laboratory Technician	B.S. Environmental Science	4	Green Bay
Kate Grams	Laboratory Technician	B.S. Soil Science	3	Green Bay
Dawn Kearns	Group Leader	B.S. Environmental Science	3	Madison
Kevin Noltemeyer	Technical Lead / Senior Technician	H.S. +	13	Madison
Bill Bruckner	Laboratory Technician	B.S. Physics	3	Madison
Rebecca Surles	Laboratory Technician	B.S. Biology	2	Madison
Chris Lovelace	Laboratory Technician	H.S.	1	Madison
Chris Munz	Laboratory Technician	B.S. Natural Science	1	Madison
James Derderian	Laboratory Technician	B.S. Chemistry	1	Madison

EN CHEM INC.

Name	Position	Degree	Years of Experience	Location
VOLATILE ORGANIC CHEMISTRY				
Jeff Bushner	Technical Director / Senior Analyst	B.S. Geology	16	Green Bay
Medina Bahr	Laboratory Analyst	B.S. Biology	8	Green Bay
Phil Scott	Senior Analyst	B.S. Water Resources Chemistry	15	Green Bay
Timothy Theisen	Laboratory Analyst	B.S. Geology	14	Green Bay
Scott Turner	Laboratory Analyst	B.S. Water Chemistry	6	Green Bay
Hong Wiley	Laboratory Analyst	B.S. Chemistry	10	Green Bay
Sheila Neuzil	Group Leader	B.S. Biology	7	Madison
Jim Yoder	2nd Shift Technical Lead / Senior Analyst	B.S. Chemical Engineering	15	Madison
LiJian He	Senior Analyst	M.S. Chemistry	9	Madison
Rosa Carrera	Laboratory Analyst	M.S. Bacteriology	3	Madison
GENERAL CHEMISTRY				
Mike Helmann	Group Leader	B.S. Biology	6	Madison
Doug Foy	Laboratory Analyst	B.A. Biology	6	Madison
Jason Kinnard	Laboratory Analyst	B.A. Psychology	2	Madison
Amanda Konen	Laboratory Analyst	B.S. Biology	2	Madison
Katherine Voight	Laboratory Analyst	B.S. Biology	3	Madison
Katie Lourigan	Laboratory Technician	B.S. Biology +	2	Madison
Anne Strouse	Laboratory Technician	B.S. Biology	3	Madison
Sharon Schoene	Laboratory Technician	B.S. Biology	1	Madison
Mark Gavin	Laboratory Technician	H.S. +	1	Madison

APPENDIX E

LABORATORY CAPABILITIES

APPENDIX E
LABORATORY CAPABILITIES

ANALYTE/PARAMETER	TECHNIQUE	METHOD REFERENCE		EN CHEM SOP	
Wet Chemistry					
		EPA-600	SW-846		Matrix
Acid Volatile Sulfides + SEM		Draft EPA Method		WCM-63	S
Acidity as $CaCO_3$	Titrimetric	305.1	-----	WCM-16	W
Acidity (Free) as $CaCO_3$	Titrimetric	305.1M	-----	WCM-57	W
Alkalinity as $CaCO_3$	LACHAT	310.2	-----	WCM-28	W
Alkalinity, bicarb/carb as $CaCO_3$	Titrimetric	SM 2320B	-----	WCM-13	W
Ash, total	Gravimetric	160.4	-----	WCM-10	W
BOD		405.1	-----	WCM-51	W
Bromide	I.C.	300.0	9056	WCM-50	W,S
Carbon Dioxide - Free		SM4500-CO2B	-----		
Chloride	LACHAT	325.1	9250	WCM-19	W
Chloride	I.C.	300.0	9056	WCM-60	W
COD (low)	Colorimetric	410.4	-----	WCM-39	W,S
COD (mid)	Colorimetric	410.4	-----	WCM-40	W,S
Color		110.2	-----	WCM-38	W
Conductance, specific		120.1	9050A	WCM-17	W
Cyanide, amenable		335.1/335.4	9010B	WCM-35	W,S
Cyanide, reactive	LACHAT	-----	7.3.3.2	WCM-23	W,S
Cyanide, total	LACHAT	335.4	9021A	WCM-23	W
Cyanide, weak and dissociable		SM 4500CN	-----	WCM-34	W,S
Eh		SM 2580-B	-----	WCM-56	W,S
Ferric Iron (Fe+3)	Calculated	Hach 8146/6010B	-----	WCM-48	W
Ferrous Iron (Fe+2)		Hach 8146	-----	WCM-48	W
Flashpoint		-----	1020A	WCM-45	W,S
Fluoride - Low	I.S.E.	SM 4500F-C		WCM-42	W
Fluoride - High	I.S.E.	SM 4500F-C		WCM-42	W
Fluoride	I.S.E.	-----	MSA 26-4.3.3	WCM-43	S
Fluoride	I.C.	300.0	9056	WCM-60	W
Free liquids (paint filter)		-----	9095A	WCM-46	W,S
Hex-Chome (alk-ext/colorimetric)	Colorimetric	SM3500-CR D	3060A/7196A	WCM-61	W,S
Nitrogen, ammonia	I.S.E.	350.3	-----	WCM-49	W
Nitrogen, ammonia	LACHAT	350.1	-----	WCM-58	W,S
Nitrogen, nitrate	Calculated	353.2	-----	WCM-33	W
Nitrogen, nitrate	I.C.	300.0	9056	WCM-60	W
Nitrogen, nitrate + nitrite	LACHAT	353.2	-----	WCM-33	W
Nitrogen, nitrite	Hach	354.1	-----	WCM-36	W,S
Nitrogen, nitrite	I.C.	300.0	9056	WCM-60	W
Nitrogen, organic	Calculated	350.1/351.4	-----	WCM-64	W,S
Nitrogen, total Kjeldahl		351.1	-----	WCM-64	W,S

EPA-600	EPA-600/4-79-020
MSA	Method of Soil Analysis
SM	Standard Methods for the Examination of Water and Wastewater, 18th Ed.
SW-846	Test Methods for Evaluating Solid Waste, Physical/Chemical Methods, 3rd Ed.
I.C.	Ion Chromatography
I.S.E.	Ion Selective Electrode

APPENDIX E
LABORATORY CAPABILITIES

ANALYTE/PARAMETER	TECHNIQUE	METHOD REFERENCE		EN CHEM SOP	
Wet Chemistry					
		EPA-600	SW-846		Matrix
Oil and Grease	Gravimetric	413.1	9071A	WCM-4	W
Oil and Grease	Gravimetric	-----	9071A	WCM-41	S
PH	pH Probe	150.1	9040B/9045C	WCM-54	W,S
Phenolics, total recoverable		420.2	9066	WCM-8	W,S
Phosphate, ortho	LACHAT	365.1	-----	WCM-44	W,S
Phosphate, ortho	I.C.	300.0	9056	WCM-60	W
Phosphorus, total		P-365.4/A-365.1	-----	WCM-44	W,S
Solids, settleable	Gravimetric	SM2540F	-----	WCM-55	W
Solids, total	Gravimetric	160.3	-----	WCM-10	S
Solids, total dissolved	Gravimetric	160.1	-----	WCM-11	W
Solids, total suspended	Gravimetric	160.2	-----	WCM-1	W
Solids, total volatile	Gravimetric	160.4	-----	WCM-1	W
Specific gravity		SM 2710F	-----	WCM-47	W,S
Sulfate	LACHAT	375.2	9036	WCM-20	W,S
Sulfate, turbidimetric		375.4	SM4500-SO4E	WCM-53	W
Sulfate	I.C.	300.0	9056	WCM-60	W,S
Sulfide	Titrimetric	376.1	9030B	WCM-21	W
Sulfide	Titrimetric	376.1	9030B/9034	WCM-22	S
Sulfide, reactive		-----	7.3.4.1	WCM-31	W
Sulfite		377.1	-----		
Total organic carbon		-----	9060 M	WCM-9	S
Total organic carbon		415.1	9060 M	WCM-2	W
Turbidity		180.1	-----	WCM-24	W

Total Organic Carbon as NPOC for aqueous reporting

EPA-600	EPA-600/4-79-020
SM	Standard Methods for the Examination of Water and Wastewater, 18th Ed.
SW-846	Test Methods for Evaluating Solid Waste, Physical/Chemical Methods, 3rd Ed.
I.C.	Ion Chromatography

APPENDIX E
LABORATORY CAPABILITIES

METHOD REFERENCE EN CHEM SOP

Metals Prep

AQUEOUS

	EPA-600	SW-846	
Microwave Digestion	-----	3015 / 7470A	MET-45
Acid Digestion - ICP - Total Metals	200.7	3010A	MET-3
Acid Digestion - ICP or ICPMS - Dissolved or Total Recov. Metals	-----	3005A	MET-2
Acid Digestion - Total Metals [1]	-----	3020A/7761(Ag)	MET-4
Acid Digestion - GFAA - As and Se	-----	7060A/7740	MET-5
Hg Digestion - CVAA	245.1	7470A	MET-30

1: Analysis by GFAA or ICPMS

COMPOSITIONAL

	EPA-600	SW-846	
Microwave Digestion	-----	3051	MET-46
Acid Digestion - ICP, ICPMS or GFAA	-----	3050B	MET-6
Acid Digestion - ICP, ICPMS or GFAA - BIOTA Samples	-----	3050-Modified	MET-59
Acid Digestion - ICP, ICPMS -Ag, Sb	-----	3050B [2]	MET-7
Hg Digestion - CVAA	-----	7471A	MET-31

2: Includes use of option 7.5 of the method.

Other Capabilities

LEACH LAB

	EPA-600	SW-846	
ASTM	-----	D3987-85	LCH-9
SPLP	-----	1312	LCH-4
TCLP	-----	1311	LCH-2
TCLP-Neutral	-----	1311-Modified	LCH-3
ZHE Extraction for Volatile Compounds	-----	1311, 1312	LCH-7

APPENDIX E
LABORATORY CAPABILITIES

METHOD REFERENCE EN CHEM SOP

Metals Analysis

		EPA-600	SW-846	
ICP - Trace		-----	6010	MET-42
ICP - AES		-----	6010B	MET-27
ICP - MS		200.8	6020	MET-58
GFAA - 5100Z Including:	Antimony	-----	7041	MET-15
	Arsenic	-----	7060A	MET-21
	Cadmium	-----	7131A	MET-20
	Chromium	-----	7191	MET-22
	Copper	-----	7211	MET-23
	Lead	-----	7421	MET-13
	Selenium	-----	7740	MET-14
	Silver	-----	7761	MET-18
	Thallium	-----	7841	MET-16
FIMS - Hg		-----	7470A, 7471A	MET-57

Metals Analysis - Instrument Operating Procedures

	EPA-600	SW-846	
ICP - AES	200.7	6010B	MET-27
ICP - MS	200.8	6020	MET-58
GFAA - 5100Z	-----	7000	MET-10
FIMS - Hg	-----	7470A, 7471A	MET-57

Volatiles Analysis

	EPA-600	SW-846	
Volatile GC/MS Analysis Low Level GC/MS Analysis	-----	524.2	VOA-6
Volatile GC/MS Analysis Waters and Methanol Extracted Solids	----- -----	8260B 5035	VOA-5
Volatile GC/MS Analysis Solid matrices	----- -----	8260B 5030B	VOA-9

APPENDIX E
LABORATORY CAPABILITIES

METHOD REFERENCE EN CHEM SOP

SemiVolatile Extractions

AQUEOUS

	EPA-600	SW-846	
Base/ Neutral/ Acids - Water	USEPA 40CFR 625	3510C	SVO-1
Base/ Neutral/ Acids - Continuous Liquid-Liquid Extraction	-----	3520C	SVO-3
Base/ Neutral/ Acids - TCLP	USEPA 57CFR 227	3510C	SVO-2
Organochlorine Pesticides/PCBs	-----	3510C	SVO-6
Organochlorine Pesticides - TCLP	-----	3510C	SVO-7
Organochlorine Pesticides/PCBs - CLP	-----	USEPA SOW*	SVO-8
Chlorinated Herbicides	-----	8150B	SVO-13
Chlorinated Herbicides - TCLP	-----	8150B	SVO-14
Total Petroleum Hydrocarbons by Infrared Spectroscopy	418.1	-----	SVO-23
Polynuclear Aromatic Hydrocarbons by HPLC	-----	3510B, 3630B	SVO-40

*USEPA Statement of Work for Organics Analysis, Document # OLM03.1
CFR : USEPA Code of Federal Regulations

COMPOSITIONAL

	EPA-600	SW-846	
Base/ Neutral/ Acids - Soil	-----	3550B	SVO-4
Base/ Neutral/ Acids - CLP	-----	USEPA SOW^	SVO-5
Organochlorine Pesticides/PCBs	-----	3550B	SVO-10
Organochlorine Pesticides/PCBs - CLP	-----	USEPA SOW*	SVO-11
Base/ Neutral/ Acids - Medium Level	-----	3550A	SVO-19
Base/ Neutral/ Acids - Medium Level - CLP	-----	USEPA SOW*	SVO-20
Toxaphene and PCBs - Medium Level	-----	3550A	SVO-21
Total Petroleum Hydrocarbons by Infrared Spectroscopy	418.1	-----	SVO-24
Polynuclear Aromatic Hydrocarbons by HPLC	-----	3550B	SVO-39
Chlorinated Herbicides	-----	8151	SVO-42
PCB Wipe Samples	-----	3550A	SVO-45
Organochlorine Pesticides/PCBs - Biological	-----	3550B	SVO-60
Polynuclear Aromatic Hydrocarbons - Biological samples	----- -----	3540C 3630C	SVO-61

^USEPA Statement of Work for Organics Analysis, Document # OLM01.8
*USEPA Statement of Work for Organics Analysis, Document # OLM03.1

APPENDIX E
LABORATORY CAPABILITIES

METHOD REFERENCE EN CHEM SOP

SemiVolatile Analysis

	EPA-600	SW-846	SOP
Chlorinated Herbicides	-----	8000A, 8150A	SVO-32
Toxaphene	-----	8000B, 8081A	SVO-33
Organochlorine Pesticides/PCBs - CLP	-----	USEPA SOW^	SVO-36
Base/ Neutral/ Acids - GC/MS	USEPA 57CFR 625	8000B, 8270C	SVO-37
Base/ Neutral/ Acids - GC/MS - CLP	-----	USEPA SOW^	SVO-38
Polynuclear Aromatic Hydrocarbons by HPLC	-----	8000B, 8310	SVO-41
Polynuclear Aromatic Hydrocarbons by HPLC	USEPA 40CFR 610	-----	SVO-49
Methanol	-----	8015A	SVO-47
Nitroglycerin in Soil	-----	8330	SVO-50
Organochlorine Pesticides - GC	-----	8000B, 8081A	SVO-51
Polychlorinated Biphenyls - GC	-----	8000B, 8082	SVO-52
Lipids Determination - Tissues, Plants, Fats	(Env.Tox.& Chem.*)	(SM5520)	SVO-59
Congener Specific PCB Determination - Capillary Column GC - Tissues	USEPA 40CFR 136	8081A, 8082, 3540C 3640A, 3630C,3660B	SVO-62
Congener Specific PCB Determination - Capillary Column GC - Soils	USEPA 40CFR 136	8081A, 8082, 3540C 3640A, 3630C,3660B	SVO-64

^USEPA Statement of Work for Organics Analysis, Document # OLM01.8
CFR : USEPA Code of Federal Regulations
*Evaluation of Selected Lipid Methods for Normalizing Pollutant Bioaccumulation, Environmental Toxicology and Chemistry, Vol 10, 1992
SM: Standard Methods for the Evaluation of Water and Wastewater, 1992

Other Capabilities

CLEANUP

	EPA-600	SW-846	
Florisil Cleanup	-----	USEPA SOW^	SVO-25
Sulfur Cleanup	-----	3660A	SVO-27
Sulfuric Acid Cleanup	-----	3665A	SVO-28
Florisil Cleanup - PCBs	-----	3620B	SVO-57
Silica Gel Cleanup and Separation - Organochlorine Pesticides & PCBs	-----	3630C	SVO-58

^USEPA Statement of Work for Organics Analysis, Document # OLM01.8

APPENDIX F

LABORATORY INSTRUMENT INVENTORY

En Chem - Madison Instrument Inventory		
Quantity	**Analytical Instrument Peripherals**	**Date of Installation**
	Volatiles	
1	HP 5890 Series 2 GC w/5970 MSD	5/91
1	HP 5890 Series 2 GC w/5971 MSD	6/93
2	HP 5890 Series 2 GC w/5972 MSD	6/96
2	HP 5890 Series 2 GC w/5973 MSD	1/91, 3/00
1	Tekmar 2000 Purge and Trap Concentrators	6/93
5	Tekmar 3000 Purge and Trap Concentrators	5/96 - 1/99
1	Dynatech PTA-30 Autosampler	6/93
5	Archon Autosamplers	5/96 - 1/99
	Metals	
2	ICP TJA 61E Trace Aanalyzer	10/98, 3/00
1	GFAA PE 5100Z-2 (Graphite Furnace)	9/92
1	PE FIMS (Flow Injector Mercury System)	8/98
2	ICPMS-HP 4500 Series	1/99, 3/00
2	Tekran-2500 Low-level Mercury Analyzer	4/01
3	Orion 96-09 ISE Meters	1/93, 1/96, 1/98
1	MARS 5 CEM (microwave digestion)	1/00
2	Hot Block Metals Digestion System	1/99, 1/00
	Information Systems	
110	Workstations w/Pentium I, II & III PCs	Various
5	NT Servers w/Pentium III PCs (150GB)	Various
1	Linux Server w/Pentium III PC (35GB)	Various
3	Unix Servers for data acquisition & processing (9GB)	Various

En Chem - Madison Instrument Inventory, cont.		
Quantity	**Analytical Instrument Peripherals**	**Date of Installation**
	General Chemistry	
1	Total Organic Carbon Analyzer (TOC) Dohrmann DC-190	4/97
1	Total Organic Carbon Analyzer (TOC) Apollo	1/01
1	Lachat Autoanalyzer	6/95
2	Dionex DX-120 Ion Chromatograph	8/98, 10/00
2	Horizon Technology SPE-4790	7/00
3	TCLP Leach Tumblers (non-volatile)	1/90, 1/96, 1/00
2	TCLP ZHE Tumblers	1/90
2	pH Meters	1/99, 1/00
4	Mididistillation System	6/96 - 7/99
1	Tecator 2040 Digestor (block)	6/97
1	Conductivity Meter, Accumet Model 30	1/97
1	YSI O_2 Meter	1/00
1	HACH Turbidimeter	1/97
2	HACH DR-2000UV Spectrophotometer	1/97, 1/99
	Semivolatiles	
2	HP 6890 GC w/5972 MSD	6/96
1	HP 6890 GC w/5973 MSD	6/99
1	APEX Large Volume Injector	1/99
4	HP 5890 GC w/Dual ECD	1/90 - 1/99
5	HP 5890 Series 2 GC w/Dual ECD	1/90 - 1/99
4	HP 6890 GC w/Dual ECD	8/98 - 4/01
1	PE 250 Binary LC Pump w/Series 200 Fluorescence Detector (3/00), 235 C Diode Array Detector & LC 101 oven	11/95
1	PE Series 200 LC Pump w/PE Series 200 Advanced Sample processor, PE LC 835A Diode Array Detector, PE LC 240 Fluorescence Detector, PE 785A UV/VIS Detector & PE LC 200 Oven	5/00
1	PE Series 410 LC Pump w/PE ISS 200 Advanced Sample processor, PE LC-95 UV/VIS Detector, McPherson FL-750 Spectro Fluorescence Detector, Pickering PCX 5100 Post Column Reactor Module & Eppendorf CH-30 Column Heater	1/86
1	Mattson FT-IR	1/89
2	GPC-ABC 1002B	1/91 - 1/00
2	GPC-OI Autoprep 1000	1/91 - 1/00
4	Sonifier Cell Disruptors	3/88
2	ASP FP-41 Muffle Furnace	1/88 - 1/90

APPENDIX G

LABORATORY FLOORPLAN

En Chem, Inc.
515 Science Drive
Upper Level

Entrances/Exits

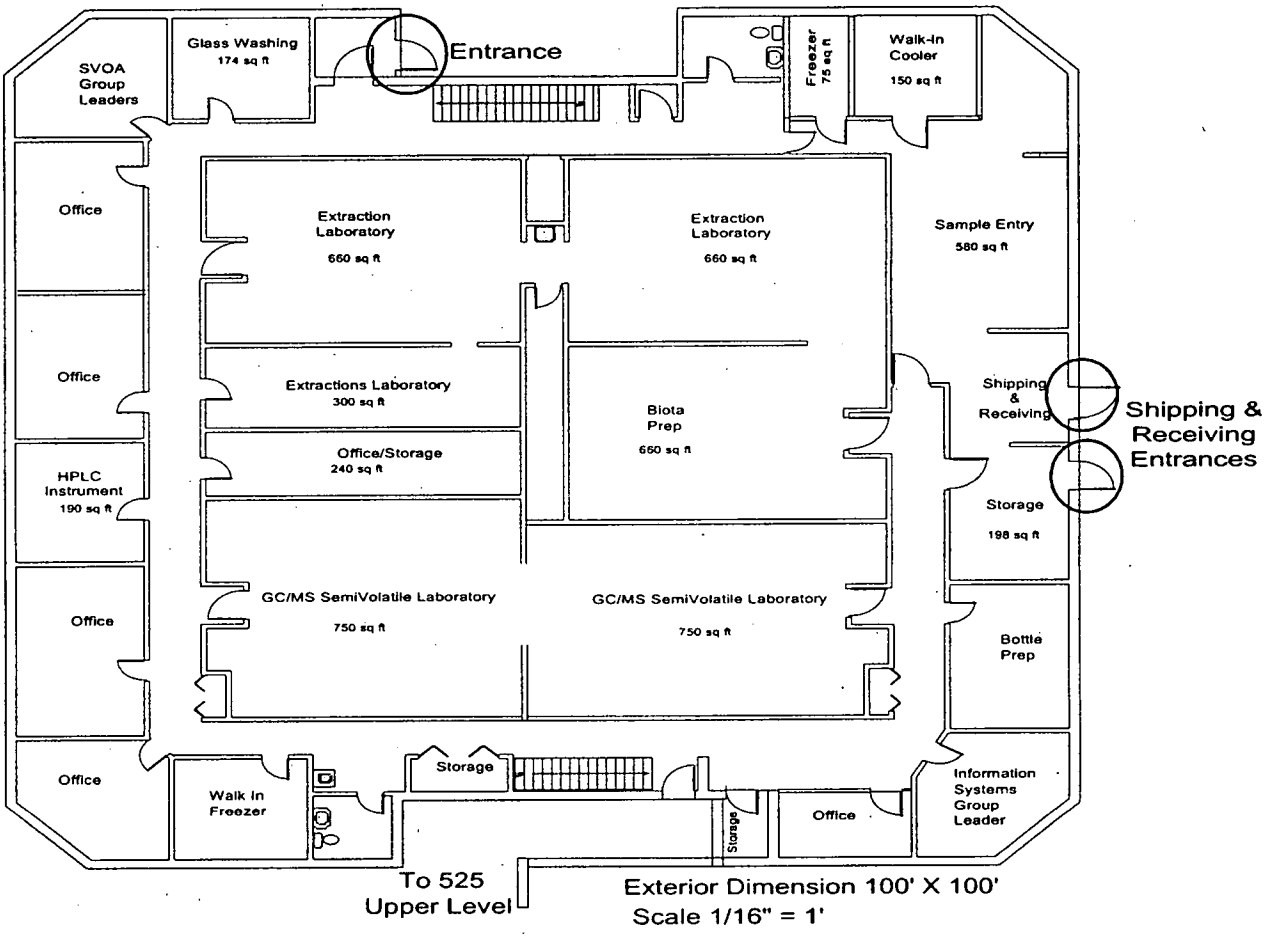

En Chem, Inc.
515 Science Drive
Lower Level

'Entrances/Exits

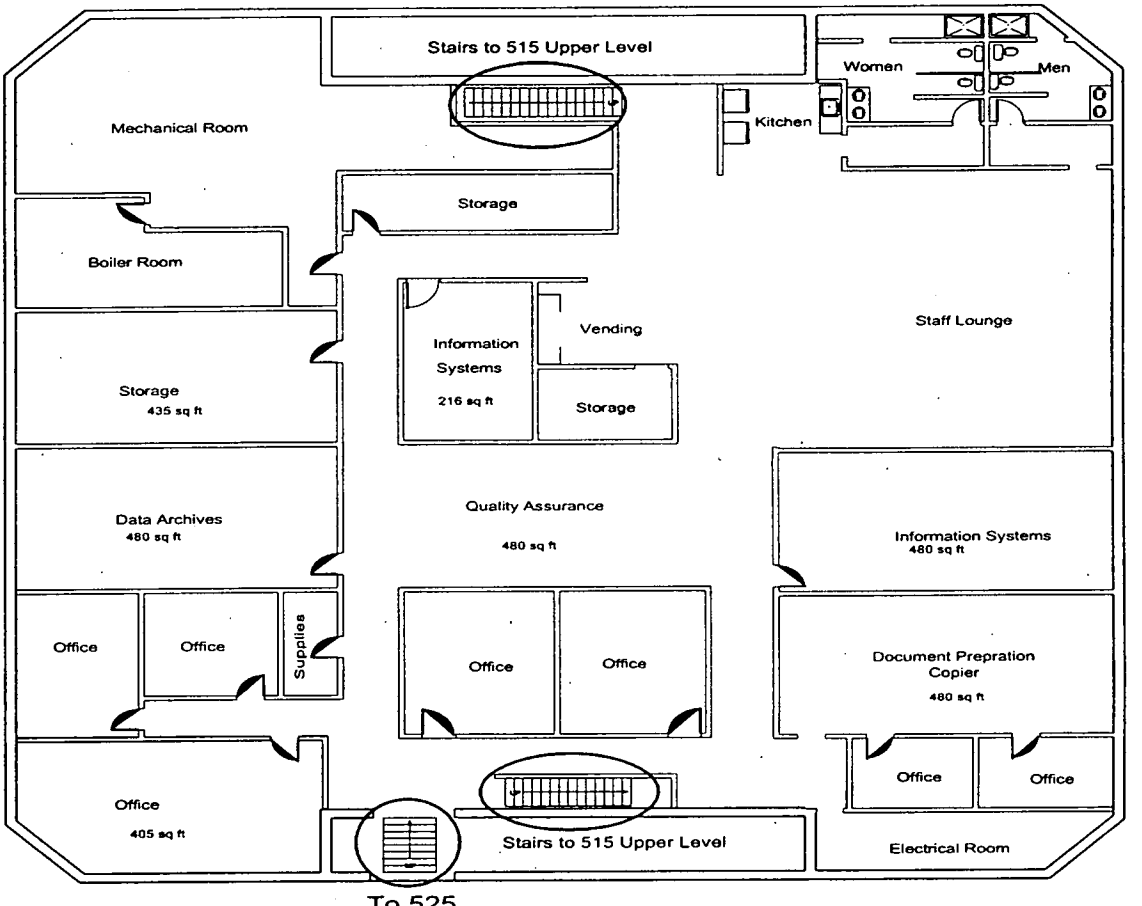

To 525
Lower Level

Exterior Dimension 100' X 100'
Scale 1/16" = 1'

En Chem, Inc.
525 Science Drive
Upper Level
Entrances/Exits

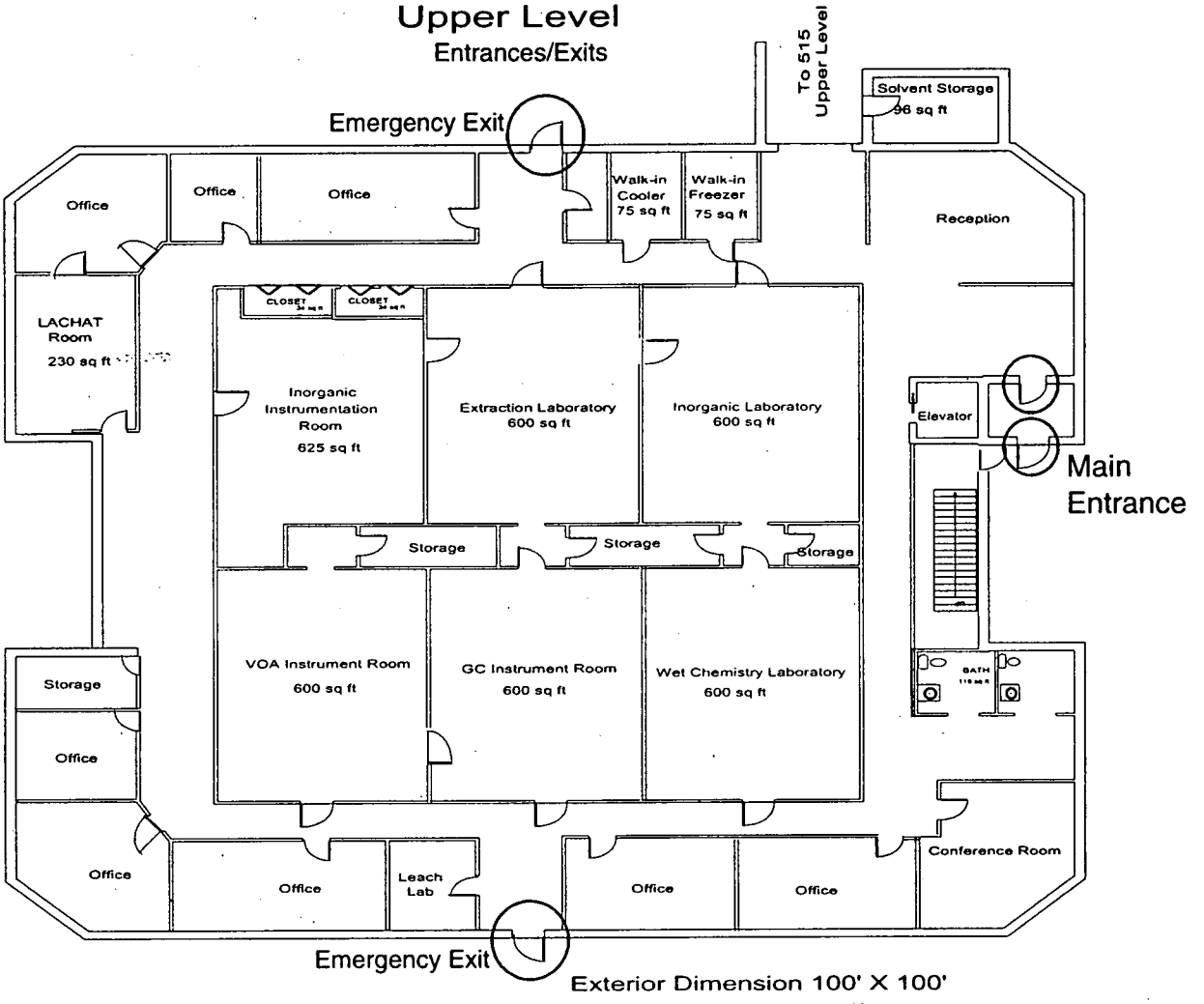

Exterior Dimension 100' X 100'
Scale 1/16" = 1'

En Chem, Inc.
525 Science Drive
Lower Level

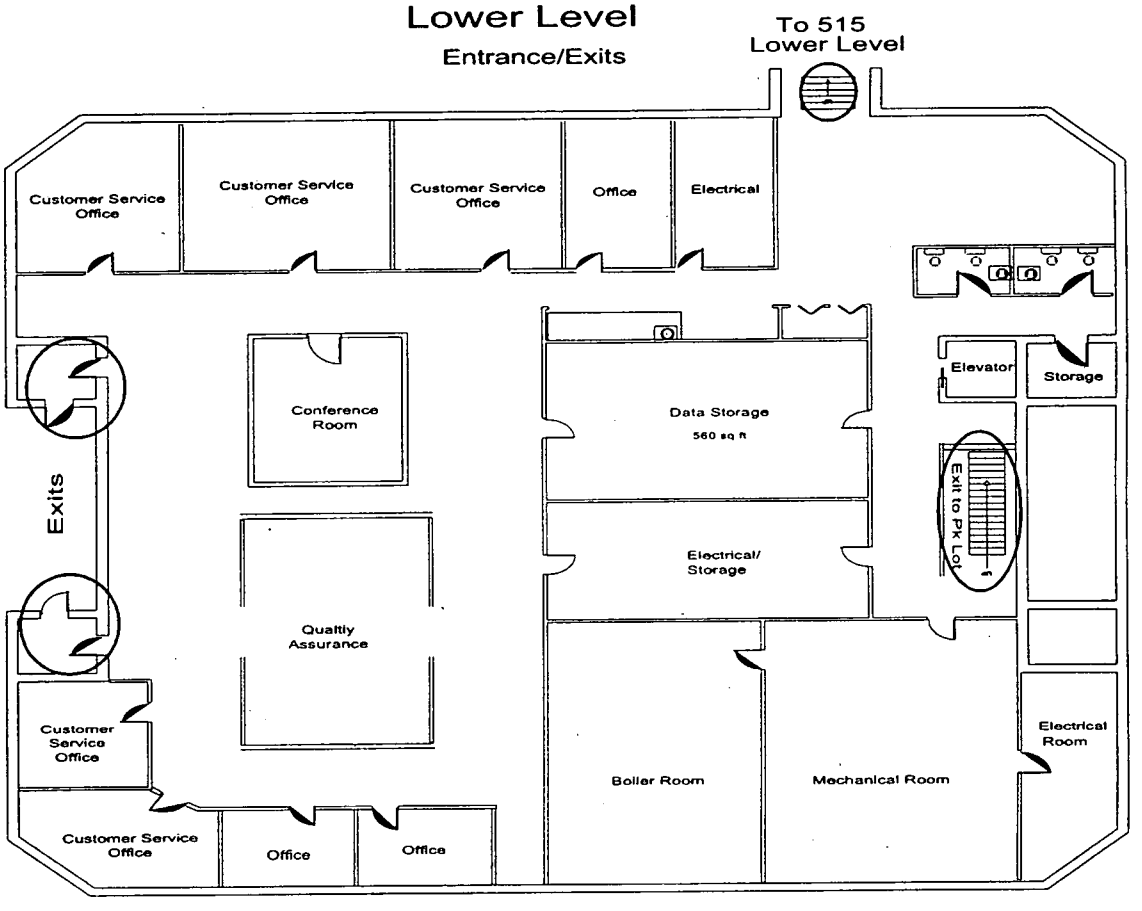

Exterior Dimension 100' X 100'
Scale 1/16" = 1'

APPENDIX H

LABORATORY CERTIFICATIONS/APPROVALS

The State of Washington Department of Ecology

This is to certify that

En Chem, Inc. Laboratory
Madison, WI

has complied with provisions set forth in Chapter 173-50 WAC and is hereby recognized by the Department of Ecology as an ACCREDITED LABORATORY for the analytical parameters listed on the accompanying Scope of Accreditation. This certificate is effective April 3, 2002, and shall expire April 2, 2003.

Witnessed under my hand on April 3, 2002.

Perry F. Brake, Chemist
Lab Accreditation Unit Supervisor

Lab Accreditation Number
C310

Scope of Accreditation

En Chem, Inc. Laboratory

Madison, WI

Is accredited by the State of Washington Department of Ecology to perform analyses for the parameters listed below using the analytical methods indicated. This Scope of Accreditation applies to non-potable water analyses only. Accreditation for all parameters is final unless indicated otherwise in a note. Accreditation is for the latest version of a method unless otherwise specified in a note. EPA refers to the U.S. Environmental Protection Agency. SM refers to American Public Health Association's publication, Standard Methods for the Examination of Water and Wastewater, 18th edition, unless otherwise noted. ASTM stands for the American Society of Testing and Materials. PSEP stands for Puget Sound Estuary Program. Other references are detailed in the notes section.

Parameter Name	Reference	Method Number	Notes
Mercury	EPA	1631	

Bill Kerr for

Authentication Signature

Perry Brake -- Unit Supervisor, Washington State Department of Ecology -- Lab Accreditation Unit

NEW YORK STATE DEPARTMENT OF HEALTH
WADSWORTH CENTER
Antonia C. Novello, M.D., M.P.H., Dr.P.H. Commissioner

Expires 12:01 AM April 01, 2003
Issued July 05, 2002
Revised January 06, 2003

CERTIFICATE OF APPROVAL FOR LABORATORY SERVICE

Issued in accordance with and pursuant to section 502 Public Health Law of New York State

MR. STEVE HERALY
EN CHEM INC
525 SCIENCE DRIVE
MADISON WI 53711 United States

NY Lab Id No: 11436
EPA Lab Code: WI00051

is hereby APPROVED as an Environmental Laboratory in conformance with the National Environmental Laboratory Accreditation Conference Standards for the category ENVIRONMENTAL ANALYSES NON POTABLE WATER
All approved analytes are listed below:

Acrolein and Acrylonitrile	
Acrolein	EPA 624
Acrylonitrile	EPA 624
Benzidines	
3,3 -dichlorobenzidine	EPA 625
Benzidine	EPA 625
Chlorinated Hydrocarbon Pesticides	
4,4 -DDE	EPA 608
4,4 -DDT	EPA 608
4,4-DDD	EPA 608
Aldrin	EPA 608
alpha-BHC	EPA 608
beta-BHC	EPA 608
Chlordane Total	EPA 608
delta-BHC	EPA 608
Dieldrin	EPA 608
Endosulfan I	EPA 608
Endosulfan II	EPA 608
Endosulfan sulfate	EPA 608
Endrin	EPA 608
Endrin aldehyde	EPA 608
Heptachlor	EPA 608
Chlorinated Hydrocarbon Pesticides	
Heptachlor epoxide	EPA 608
Lindane	EPA 608
Methoxychlor	EPA 608
Chlorinated Hydrocarbons	
1,2,4-Trichlorobenzene	EPA 625
2-Chloronaphthalene	EPA 625
Hexachlorobenzene	EPA 625
Hexachlorobutadiene	EPA 625
Hexachlorocyclopentadiene	EPA 625
Hexachloroethane	EPA 625
Chlorophenoxy Acid Pesticides	
2,4,5-T	SM 18-20 6640B
2,4,5-TP (Silvex)	SM 18-20 6640B
2,4-D	SM 18-20 6640B
Haloethers	
4-Bromophenylphenyl ether	EPA 625
4-Chlorophenylphenyl ether	EPA 625
Bis (2-chloroisopropyl) ether	EPA 625
Bis(2-chloroethoxy)methane	EPA 625
Bis(2-chloroethyl)ether	EPA 625

Serial No.: 17886

Property of the New York State Department of Health. Valid only at the address shown. Must be conspicuously posted. Valid certificates have a raised seal and may be verified by calling (518) 485-5570.

DOH-3317 (3/97)

NEW YORK STATE DEPARTMENT OF HEALTH
WADSWORTH CENTER
Antonia C. Novello, M.D., M.P.H., Dr.P.H. Commissioner

Expires 12:01 AM April 01, 2003
Issued July 05, 2002
Revised January 06, 2003

CERTIFICATE OF APPROVAL FOR LABORATORY SERVICE

Issued in accordance with and pursuant to section 502 Public Health Law of New York State

MR. STEVE HERALY
EN CHEM INC
525 SCIENCE DRIVE
MADISON WI 53711 United States

NY Lab Id No: 11436
EPA Lab Code: WI00051

is hereby APPROVED as an Environmental Laboratory in conformance with the National Environmental Laboratory Accreditation Conference Standards for the category ENVIRONMENTAL ANALYSES NON POTABLE WATER All approved analytes are listed below:

Mineral	
Acidity	EPA 305.1
Alkalinity	EPA 310.2
	SM 18-20 2320-B
Calcium Hardness	EPA 200.7
Chloride	EPA 300.0
	EPA 325.1
Fluoride, Total	EPA 300.0
	SM 18-20 4500-F-C
Hardness, Total	EPA 200.7
Sulfate (as SO4)	EPA 300.0
	EPA 375.1
Nitroaromatics and Isophorone	
2,4-Dinitrotoluene	EPA 625
2,6-Dinitrotoluene	EPA 625
Isophorone	EPA 625
Nitrobenzene	EPA 625
Nitrosoamines	
N-Nitrosodimethylamine	EPA 625
N-Nitrosodi-n-propylamine	EPA 625
N-Nitrosodiphenylamine	EPA 625

Nutrient	
Ammonia (as N)	EPA 350.1
Nitrate (as N)	EPA 300.0
	EPA 353.2
Nitrite (as N)	EPA 300.0
	EPA 354.1
Orthophosphate (as P)	EPA 300.0
Phosphorus, Total	EPA 365.1
Phthalate Esters	
Benzyl butyl phthalate	EPA 625
Bis(2-ethylhexyl) phthalate	EPA 625
Diethyl phthalate	EPA 625
Dimethyl phthalate	EPA 625
Di-n-butyl phthalate	EPA 625
Di-n-octyl phthalate	EPA 625
Polychlorinated Biphenyls	
PCB-1016	EPA 608
PCB-1221	EPA 608
PCB-1232	EPA 608
PCB-1242	EPA 608
PCB-1248	EPA 608
PCB-1254	EPA 608

Serial No.: 17886

Property of the New York State Department of Health. Valid only at the address shown. Must be conspicuously posted. Valid certificates have a raised seal and may be verified by calling (518) 485-5570.

DOH-3317 (3/97)

NEW YORK STATE DEPARTMENT OF HEALTH
WADSWORTH CENTER
Antonia C. Novello, M.D., M.P.H., Dr.P.H. Commissioner

Expires 12:01 AM April 01, 2003
Issued July 05, 2002
Revised January 06, 2003

CERTIFICATE OF APPROVAL FOR LABORATORY SERVICE

Issued in accordance with and pursuant to section 502 Public Health Law of New York State

MR. STEVE HERALY
EN CHEM INC
525 SCIENCE DRIVE
MADISON WI 53711 United States

NY Lab Id No: 11436
EPA Lab Code: WI00051

is hereby APPROVED as an Environmental Laboratory in conformance with the National Environmental Laboratory Accreditation Conference Standards for the category ENVIRONMENTAL ANALYSES NON POTABLE WATER All approved analytes are listed below:

Polychlorinated Biphenyls	
PCB-1260	EPA 608
Polynuclear Aromatics	
Acenaphthene	EPA 610
	EPA 625
Acenaphthylene	EPA 610
	EPA 625
Anthracene	EPA 610
	EPA 625
Benzo(a)anthracene	EPA 610
	EPA 625
Benzo(a)pyrene	EPA 610
	EPA 625
Benzo(b)fluoranthene	EPA 610
	EPA 625
Benzo(ghi)perylene	EPA 610
	EPA 625
Benzo(k)fluoranthene	EPA 610
	EPA 625
Chrysene	EPA 610
	EPA 625
Dibenzo(a,h)anthracene	EPA 610

Polynuclear Aromatics	
Dibenzo(a,h)anthracene	EPA 625
Fluoranthene	EPA 610
	EPA 625
Fluorene	EPA 610
	EPA 625
Indeno(1,2,3-cd)pyrene	EPA 610
	EPA 625
Naphthalene	EPA 610
	EPA 625
Phenanthrene	EPA 610
	EPA 625
Pyrene	EPA 610
	EPA 625
Priority Pollutant Phenols	
2,4,5-Trichlorophenol	EPA 625
2,4,6-Trichlorophenol	EPA 625
2,4-Dichlorophenol	EPA 625
2,4-Dimethylphenol	EPA 625
2,4-Dinitrophenol	EPA 625
2-Chlorophenol	EPA 625
2-Methyl-4,6-dinitrophenol	EPA 625

Serial No.: 17886

Property of the New York State Department of Health. Valid only at the address shown. Must be conspicuously posted. Valid certificates have a raised seal and may be verified by calling (518) 485-5570.

DOH-3317 (3/97)

NEW YORK STATE DEPARTMENT OF HEALTH
WADSWORTH CENTER
Antonia C. Novello, M.D., M.P.H., Dr.P.H. Commissioner

Expires 12:01 AM April 01, 2003
Issued July 05, 2002
Revised January 06, 2003

CERTIFICATE OF APPROVAL FOR LABORATORY SERVICE

Issued in accordance with and pursuant to section 502 Public Health Law of New York State

MR. STEVE HERALY
EN CHEM INC
525 SCIENCE DRIVE
MADISON WI 53711 United States

NY Lab Id No: 11436
EPA Lab Code: WI00051

is hereby APPROVED as an Environmental Laboratory in conformance with the National Environmental Laboratory Accreditation Conference Standards for the category ENVIRONMENTAL ANALYSES NON POTABLE WATER
All approved analytes are listed below:

Priority Pollutant Phenols

2-Nitrophenol	EPA 625
4-Chloro-3-methylphenol	EPA 625
4-Nitrophenol	EPA 625
Pentachlorophenol	EPA 625
Phenol	EPA 625

Purgeable Aromatics

1,2-Dichlorobenzene	EPA 624
	EPA 625
1,3-Dichlorobenzene	EPA 624
	EPA 625
1,4-Dichlorobenzene	EPA 624
	EPA 625
Benzene	EPA 624
Chlorobenzene	EPA 624
Ethyl benzene	EPA 624
Toluene	EPA 624
Total Xylenes	EPA 624

Purgeable Halocarbons

1,1,1-Trichloroethane	EPA 624
1,1,2,2-Tetrachloroethane	EPA 624
1,1,2-Trichloroethane	EPA 624

Purgeable Halocarbons

1,1-Dichloroethane	EPA 624
1,1-Dichloroethene	EPA 624
1,2-Dichloroethane	EPA 624
1,2-Dichloropropane	EPA 624
2-Chloroethylvinyl ether	EPA 624
Bromodichloromethane	EPA 624
Bromoform	EPA 624
Bromomethane	EPA 624
Carbon tetrachloride	EPA 624
Chloroethane	EPA 624
Chloroform	EPA 624
Chloromethane	EPA 624
cis-1,3-Dichloropropene	EPA 624
Dibromochloromethane	EPA 624
Dichlorodifluoromethane	EPA 624
Methylene chloride	EPA 624
Tetrachloroethene	EPA 624
trans-1,2-Dichloroethene	EPA 624
trans-1,3-Dichloropropene	EPA 624
Trichloroethene	EPA 624
Trichlorofluoromethane	EPA 624

Serial No.: 17886

Property of the New York State Department of Health. Valid only at the address shown. Must be conspicuously posted. Valid certificates have a raised seal and may be verified by calling (518) 485-5570.

DOH-3317 (3/97)

NEW YORK STATE DEPARTMENT OF HEALTH
WADSWORTH CENTER
Antonia C. Novello, M.D., M.P.H., Dr.P.H. Commissioner

Expires 12:01 AM April 01, 2003
Issued July 05, 2002
Revised January 06, 2003

CERTIFICATE OF APPROVAL FOR LABORATORY SERVICE

Issued in accordance with and pursuant to section 502 Public Health Law of New York State

MR. STEVE HERALY
EN CHEM INC
525 SCIENCE DRIVE
MADISON WI 53711 United States

NY Lab Id No: 11436
EPA Lab Code: WI00051

is hereby APPROVED as an Environmental Laboratory in conformance with the National Environmental Laboratory Accreditation Conference Standards for the category ENVIRONMENTAL ANALYSES NON POTABLE WATER All approved analytes are listed below:

Purgeable Halocarbons	
Vinyl chloride	EPA 624
Residue	
Solids, Total	EPA 160.3
Solids, Total Dissolved	EPA 160.1
Solids, Total Suspended	EPA 160.2
TCLP Additional Compounds	
Cresol	SW-846 8270C
Methylethyl ketone (2-butanone)	SW-846 8260B
Pyridine	SW-846 8270C
Wastewater Metals I	
Barium, Total	EPA 200.7
	EPA 200.8
Cadmium, Total	EPA 200.7
	EPA 200.8
	EPA 200.9
	EPA 213.2
Calcium, Total	EPA 200.7
Chromium, Total	EPA 200.7
	EPA 200.8
	EPA 200.9
	EPA 218.2
Wastewater Metals I	
Copper, Total	EPA 200.7
	EPA 200.8
	EPA 200.9
	EPA 220.2
Iron, Total	EPA 200.7
Lead, Total	EPA 200.7
	EPA 200.8
	EPA 200.9
	EPA 239.2
Magnesium, Total	EPA 200.7
Manganese, Total	EPA 200.7
	EPA 200.8
Nickel, Total	EPA 200.7
	EPA 200.8
Potassium, Total	EPA 200.7
Silver, Total	EPA 200.7
	EPA 200.8
	EPA 200.9
	EPA 272.2
Sodium, Total	EPA 200.7

Serial No.: 17886

Property of the New York State Department of Health. Valid only at the address shown. Must be conspicuously posted. Valid certificates have a raised seal and may be verified by calling (518) 485-5570.

DOH-3317 (3/97)

NEW YORK STATE DEPARTMENT OF HEALTH
WADSWORTH CENTER
Antonia C. Novello, M.D., M.P.H., Dr.P.H. Commissioner

Expires 12:01 AM April 01, 2003
Issued July 05, 2002
Revised January 06, 2003

CERTIFICATE OF APPROVAL FOR LABORATORY SERVICE

Issued in accordance with and pursuant to section 502 Public Health Law of New York State

MR. STEVE HERALY
EN CHEM INC
525 SCIENCE DRIVE
MADISON WI 53711 United States

NY Lab Id No: 11436
EPA Lab Code: WI00051

is hereby APPROVED as an Environmental Laboratory in conformance with the National Environmental Laboratory Accreditation Conference Standards for the category ENVIRONMENTAL ANALYSES NON POTABLE WATER
All approved analytes are listed below:

Wastewater Metals II	
Aluminum, Total	EPA 200.7
	EPA 200.8
Antimony, Total	EPA 200.7
	EPA 200.8
	EPA 200.9
	EPA 204.2
Arsenic, Total	EPA 200.7
	EPA 200.8
	EPA 200.9
	EPA 206.2
Beryllium, Total	EPA 200.7
	EPA 200.8
Chromium VI	SM 18-19 3500-Cr D
Mercury, Total	EPA 1631E
	EPA 200.8
	EPA 245.1
Selenium, Total	EPA 200.7
	EPA 200.8
	EPA 270.2
Vanadium, Total	EPA 200.7
	EPA 200.8
Wastewater Metals II	
Zinc, Total	EPA 200.7
	EPA 200.8
Wastewater Metals III	
Cobalt, Total	EPA 200.7
	EPA 200.8
Molybdenum, Total	EPA 200.7
Thallium, Total	EPA 200.7
	EPA 200.8
	EPA 200.9
	EPA 279.2
Tin, Total	EPA 200.7
Titanium, Total	EPA 200.7
Wastewater Miscellaneous	
Bromide	EPA 300.0
Color	EPA 110.2
Cyanide, Total	EPA 335.4
Hydrogen Ion (pH)	EPA 150.1
Organic Carbon, Total	EPA 415.1
Phenols	EPA 420.2
Specific Conductance	EPA 120.1
Sulfide (as S)	EPA 376.1

Serial No.: 17886

Property of the New York State Department of Health. Valid only at the address shown. Must be conspicuously posted. Valid certificates have a raised seal and may be verified by calling (518) 485-5570.

DOH-3317 (3/97)

NEW YORK STATE DEPARTMENT OF HEALTH
WADSWORTH CENTER
Antonia C. Novello, M.D., M.P.H., Dr.P.H. Commissioner

Expires 12:01 AM April 01, 2003
Issued July 05, 2002
Revised January 06, 2003

CERTIFICATE OF APPROVAL FOR LABORATORY SERVICE

Issued in accordance with and pursuant to section 502 Public Health Law of New York State

MR. STEVE HERALY
EN CHEM INC
525 SCIENCE DRIVE
MADISON WI 53711 United States

NY Lab Id No: 11436
EPA Lab Code: WI00051

is hereby APPROVED as an Environmental Laboratory for the category
ENVIRONMENTAL ANALYSES NON POTABLE WATER
All approved subcategories and/or analytes are listed below:

Chlorinated Hydrocarbon Pesticides

Toxaphene	EPA 608

Chlorophenoxy Acid Pesticides

Dicamba	Method Not Specified

Serial No.: 17887

Property of the New York State Department of Health. Valid only at the address shown. Must be conspicuously posted. Valid certificates have a raised seal and may be verified by calling (518) 485-5570.

DOH-3317 (3/97)

NEW YORK STATE DEPARTMENT OF HEALTH
WADSWORTH CENTER
Antonia C. Novello, M.D., M.P.H., Dr.P.H. Commissioner

Expires 12:01 AM April 01, 2003
Issued July 05, 2002
Revised October 10, 2002

CERTIFICATE OF APPROVAL FOR LABORATORY SERVICE

Issued in accordance with and pursuant to section 502 Public Health Law of New York State

MR. STEVE HERALY
EN CHEM INC
525 SCIENCE DRIVE
MADISON WI 53711 USA

NY Lab Id No: 11436
EPA Lab Code: WI00051

is hereby APPROVED as an Environmental Laboratory in conformance with the National Environmental Laboratory Accreditation Conference Standards for the category ENVIRONMENTAL ANALYSES SOLID AND HAZARDOUS WASTE All approved analytes are listed below:

Acrolein and Acrylonitrile	
Acrolein	SW-846 8260B
Acrylonitrile	SW-846 8260B
Characteristic Testing	
TCLP	FED REG 1311
Chlorinated Hydrocarbon Pesticides	
4,4 -DDE	SW-846 8081A
4,4 -DDT	SW-846 8081A
4,4-DDD	SW-846 8081A
Aldrin	SW-846 8081A
alpha-BHC	SW-846 8081A
beta-BHC	SW-846 8081A
Chlordane Total	SW-846 8081A
delta-BHC	SW-846 8081A
Dieldrin	SW-846 8081A
Endosulfan I	SW-846 8081A
Endosulfan II	SW-846 8081A
Endosulfan sulfate	SW-846 8081A
Endrin	SW-846 8081A
Endrin aldehyde	SW-846 8081A
Heptachlor	SW-846 8081A
Heptachlor epoxide	SW-846 8081A
Chlorinated Hydrocarbon Pesticides	
Lindane	SW-846 8081A
Methoxychlor	SW-846 8081A
Chlorinated Hydrocarbons	
1,2,4-Trichlorobenzene	SW-846 8270C
2-Chloronaphthalene	SW-846 8270C
Hexachlorobenzene	SW-846 8270C
Hexachlorobutadiene	SW-846 8270C
Hexachlorocyclopentadiene	SW-846 8270C
Hexachloroethane	SW-846 8270C
Chlorophenoxy Acid Pesticides	
2,4,5-T	SW846 8151-A
2,4,5-TP (Silvex)	SW846 8151-A
2,4-D	SW846 8151-A
Dicamba	SW846 8151-A
Haloethers	
Bis (2-chloroisopropyl) ether	SW-846 8270C
Bis(2-chloroethoxy)methane	SW-846 8270C
Metals I	
Barium, Total	SW-846 6010B
	SW-846 6020

Serial No.: 17467

Property of the New York State Department of Health. Valid only at the address shown. Must be conspicuously posted. Valid certificates have a raised seal and may be verified by calling (518) 485-5570.

DOH-3317 (3/97)

NEW YORK STATE DEPARTMENT OF HEALTH
WADSWORTH CENTER
Antonia C. Novello, M.D., M.P.H., Dr.P.H. Commissioner

Expires 12:01 AM April 01, 2003
Issued July 05, 2002
Revised October 10, 2002

CERTIFICATE OF APPROVAL FOR LABORATORY SERVICE

Issued in accordance with and pursuant to section 502 Public Health Law of New York State

MR. STEVE HERALY
EN CHEM INC
525 SCIENCE DRIVE
MADISON WI 53711 USA

NY Lab Id No: 11436
EPA Lab Code: WI00051

is hereby APPROVED as an Environmental Laboratory in conformance with the National Environmental Laboratory Accreditation Conference Standards for the category ENVIRONMENTAL ANALYSES SOLID AND HAZARDOUS WASTE
All approved analytes are listed below:

Metals I	
Cadmium, Total	SW-846 6010B
	SW-846 6020
	SW-846 7131-A
Chromium, Total	SW-846 7191
	SW-846 6010B
	SW-846 6020
Lead, Total	SW-846 6010B
	SW-846 6020
	SW-846 7421
Nickel, Total	SW-846 6010B
	SW-846 6020
Silver, Total	SW846 - 7761
	SW-846 6010B
	SW-846 6020
Metals II	
Antimony, Total	SW-846 6010B
	SW-846 6020
	SW846 7041
Arsenic, Total	SW-846 6010B
	SW-846 6020
	SW846 7060A
Metals II	
Selenium, Total	SW-846 6010B
	SW-846 6020
	SW-846 7740
Miscellaneous	
Cyanide, Total	SW-846 9012A
Nitroaromatics and Isophorone	
2,4-Dinitrotoluene	SW-846 8270C
2,6-Dinitrotoluene	SW-846 8270C
Isophorone	SW-846 8270C
Nitrobenzene	SW-846 8270C
Phthalate Esters	
Benzyl butyl phthalate	SW-846 8270C
Bis(2-ethylhexyl) phthalate	SW-846 8270C
Diethyl phthalate	SW-846 8270C
Dimethyl phthalate	SW-846 8270C
Di-n-butyl phthalate	SW-846 8270C
Di-n-octyl phthalate	SW-846 8270C
Polychlorinated Biphenyls	
PCB-1016	SW-846 8082
PCB-1221	SW-846 8082

Serial No.: 17467

Property of the New York State Department of Health. Valid only at the address shown. Must be conspicuously posted. Valid certificates have a raised seal and may be verified by calling (518) 485-5570.

DOH-3317 (3/97)

NEW YORK STATE DEPARTMENT OF HEALTH
WADSWORTH CENTER
Antonia C. Novello, M.D., M.P.H., Dr.P.H. Commissioner

Expires 12:01 AM April 01, 2003
Issued July 05, 2002
Revised October 10, 2002

CERTIFICATE OF APPROVAL FOR LABORATORY SERVICE

Issued in accordance with and pursuant to section 502 Public Health Law of New York State

MR. STEVE HERALY
EN CHEM INC
525 SCIENCE DRIVE
MADISON WI 53711 USA

NY Lab Id No: 11436
EPA Lab Code: WI00051

is hereby APPROVED as an Environmental Laboratory in conformance with the National Environmental Laboratory Accreditation Conference Standards for the category ENVIRONMENTAL ANALYSES SOLID AND HAZARDOUS WASTE All approved analytes are listed below:

Polychlorinated Biphenyls

PCB-1232	SW-846 8082
PCB-1242	SW-846 8082
PCB-1248	SW-846 8082
PCB-1254	SW-846 8082
PCB-1260	SW-846 8082

Polynuclear Aromatic Hydrocarbons

Acenaphthene	SW-846 8270C
	SW-846 8310
Acenaphthylene	SW-846 8270C
	SW-846 8310
Anthracene	SW-846 8270C
	SW-846 8310
Benzo(a)anthracene	SW-846 8270C
	SW-846 8310
Benzo(a)pyrene	SW-846 8270C
	SW-846 8310
Benzo(b)fluoranthene	SW-846 8270C
	SW-846 8310
Benzo(ghi)perylene	SW-846 8270C
	SW-846 8310
Chrysene	SW-846 8270C

Polynuclear Aromatic Hydrocarbons

Chrysene	SW-846 8310
Dibenzo(a,h)anthracene	SW-846 8270C
	SW-846 8310
Fluoranthene	SW-846 8270C
	SW-846 8310
Fluorene	SW-846 8270C
	SW-846 8310
Indeno(1,2,3-cd)pyrene	SW-846 8270C
	SW-846 8310
Naphthalene	SW-846 8270C
	SW-846 8310
Phenanthrene	SW-846 8270C
	SW-846 8310
Pyrene	SW-846 8270C
	SW-846 8310

Priority Pollutant Phenols

2,4,6-Trichlorophenol	SW-846 8270C
2,4-Dichlorophenol	SW-846 8270C
2,4-Dimethylphenol	SW-846 8270C
2,4-Dinitrophenol	SW-846 8270C
2-Chlorophenol	SW-846 8270C

Serial No.: 17467

Property of the New York State Department of Health. Valid only at the address shown. Must be conspicuously posted. Valid certificates have a raised seal and may be verified by calling (518) 485-5570.

DOH-3317 (3/97)

NEW YORK STATE DEPARTMENT OF HEALTH
WADSWORTH CENTER
Antonia C. Novello, M.D., M.P.H., Dr.P.H. Commissioner

Expires 12:01 AM April 01, 2003
Issued July 05, 2002
Revised October 10, 2002

CERTIFICATE OF APPROVAL FOR LABORATORY SERVICE

Issued in accordance with and pursuant to section 502 Public Health Law of New York State

MR. STEVE HERALY
EN CHEM INC
525 SCIENCE DRIVE
MADISON WI 53711 USA

NY Lab Id No: 11436
EPA Lab Code: WI00051

is hereby APPROVED as an Environmental Laboratory in conformance with the National Environmental Laboratory Accreditation Conference Standards for the category ENVIRONMENTAL ANALYSES SOLID AND HAZARDOUS WASTE
All approved analytes are listed below:

Priority Pollutant Phenols

2-Methyl-4,6-dinitrophenol	SW-846 8270C
2-Nitrophenol	SW-846 8270C
4-Chloro-3-methylphenol	SW-846 8270C
4-Nitrophenol	SW-846 8270C
Pentachlorophenol	SW-846 8270C
Phenol	SW-846 8270C

Purgeable Aromatics

1,2-Dichlorobenzene	SW-846 8260B
1,3-Dichlorobenzene	SW-846 8260B
1,4-Dichlorobenzene	SW-846 8260B
Benzene	SW-846 8260B
Chlorobenzene	SW-846 8260B
Ethyl benzene	SW-846 8260B
Toluene	SW-846 8260B
Total Xylenes	SW-846 8260B

Purgeable Halocarbons

1,1,1-Trichloroethane	SW-846 8260B
1,1,2,2-Tetrachloroethane	SW-846 8260B
1,1,2-Trichloroethane	SW-846 8260B
1,1-Dichloroethane	SW-846 8260B
1,1-Dichloroethene	SW-846 8260B

Purgeable Halocarbons

1,2-Dichloroethane	SW-846 8260B
1,2-Dichloropropane	SW-846 8260B
2-Chloroethylvinyl ether	SW-846 8260B
Bromodichloromethane	SW-846 8260B
Bromoform	SW-846 8260B
Bromomethane	SW-846 8260B
Carbon tetrachloride	SW-846 8260B
Chloroethane	SW-846 8260B
Chloroform	SW-846 8260B
Chloromethane	SW-846 8260B
cis-1,3-Dichloropropene	SW-846 8260B
Dibromochloromethane	SW-846 8260B
Dichlorodifluoromethane	SW-846 8260B
Methylene chloride	SW-846 8260B
Tetrachloroethene	SW-846 8260B
trans-1,3-Dichloropropene	SW-846 8260B
Trichloroethene	SW-846 8260B
Trichlorofluoromethane	SW-846 8260B
Vinyl chloride	SW-846 8260B

Serial No.: 17467

Property of the New York State Department of Health. Valid only at the address shown. Must be conspicuously posted. Valid certificates have a raised seal and may be verified by calling (518) 485-5570.

DOH-3317 (3/97)

NEW YORK STATE DEPARTMENT OF HEALTH
WADSWORTH CENTER
Antonia C. Novello, M.D., M.P.H., Dr.P.H. Commissioner

Expires 12:01 AM April 01, 2003
Issued July 05, 2002
Revised October 10, 2002

CERTIFICATE OF APPROVAL FOR LABORATORY SERVICE

Issued in accordance with and pursuant to section 502 Public Health Law of New York State

MR. STEVE HERALY
EN CHEM INC
525 SCIENCE DRIVE
MADISON WI 53711 USA

NY Lab Id No: 11436
EPA Lab Code: WI00051

is hereby APPROVED as an Environmental Laboratory for the category
ENVIRONMENTAL ANALYSES SOLID AND HAZARDOUS WASTE
All approved subcategories and/or analytes are listed below:

Chlorinated Hydrocarbon Pesticides

Toxaphene	SW-846 8081A

Metals II

Chromium VI	SW-846 7196A
Mercury, Total	SW846 7470A
	SW846 7471A

Serial No.: 17468

Property of the New York State Department of Health. Valid only at the address shown. Must be conspicuously posted. Valid certificates have a raised seal and may be verified by calling (518) 485-5570.

DOH-3317 (3/97)

NEW YORK STATE DEPARTMENT OF HEALTH
WADSWORTH CENTER

Antonia C. Novello, M.D., M.P.H., Dr.P.H. Commissioner

Expires 12:01 AM April 01, 2003
Issued July 05, 2002
Revised October 10, 2002

CERTIFICATE OF APPROVAL FOR LABORATORY SERVICE

Issued in accordance with and pursuant to section 502 Public Health Law of New York State

MR. STEVE HERALY
EN CHEM INC
525 SCIENCE DRIVE
MADISON WI 53711 USA

NY Lab Id No: 11436
EPA Lab Code: WI00051

is hereby APPROVED as an Environmental Laboratory for the category
ENVIRONMENTAL ANALYSES ANALYTICAL SERVICES PROTOCOL
All approved subcategories and/or analytes are listed below:

CLP Semi-Volatile Organics

CLP Volatile Organics

CLP Inorganics

CLP PCB/Pesticides

Serial No.: 17469

Property of the New York State Department of Health. Valid only at the address shown. Must be conspicuously posted. Valid certificates have a raised seal and may be verified by calling (518) 485-5570.

DOH-3317 (3/97)

The State of Wisconsin

DEPARTMENT OF NATURAL RESOURCES

WISCONSIN DEPT. OF NATURAL RESOURCES

Hereby grants

Wisconsin Certification under NR 149

under the provisions of ch. NR 149, Wisconsin Administrative Code to:

En Chem, Inc. (Kimberly)
1090 Kennedy Avenue
Kimberly, WI 54136

Laboratory ID Number: **445134030**

Issued Date: **January 21, 2003**

Expiration Date: **August 31, 2003**

for the following test categories:

- Oxygen Utilization
  - Biochemical Oxygen Demand
- Nitrogen
  - Ammonia as N
  - Nitrite as N
  - Nitrate as N
  - Total Kjeldahl Nitrogen
- Phosphorus
  - Orthophosphate
  - Total Phosphorus
- Physical
  - Oil and Grease (HEM)
  - Oil and Grease (Freon)
  - Total Dissolved Solids
  - Total Solids
  - Total Suspended Solids
  - Total Volatile Solids
- General I
  - Alkalinity/Acidity
  - Bromide
  - Color
  - Hardness
  - Silica
  - Sulfite
- General II
  - Chloride
  - Cyanide
  - Chemical Oxygen Demand
  - Fluoride
  - Total Phenolic Compounds
  - Sulfide
- General II
  - Sulfate
- General III
  - EP Toxicity
  - Ignitability
  - Total Releasable Cyanide
  - Reactivity
  - Total Releasable Sulfide
  - SPLP
  - TCLP
  - Total Organic Carbon
  - Total Organic Halides
- Metals I
  - Silver
  - Aluminum
  - Arsenic
  - Boron
  - Barium
  - Beryllium
  - Calcium
  - Cadmium
  - Cobalt
  - Chromium (Total)
  - Copper
  - Iron
  - Chromium (Hexavalent)
  - Mercury
  - Potassium
  - Magnesium
  - Manganese
  - Molybdenum
- Metals I
  - Sodium
  - Nickel
  - Lead
  - Antimony
  - Selenium
  - Tin
  - Thallium
  - Vanadium
  - Zinc
- Organics; Purgeable
  - Purgeable Aromatics
  - Purgeable Halocarbons
  - Volatile Organics (VOCs)
- Semivolatiles by GC/MS
  - Base/Neutral/Acid Extract
- Liquid Chromatography
  - Explosives by LC
  - PAHs by LC
- Pesticides
  - Acid Herbicides
- Organics; Organochlorine
  - PCBs
  - Organochlorine Pesticides
- Safe Drinking Water
  - Arsenic
  - Barium
  - Beryllium
  - Cadmium
  - Chromium
- Safe Drinking Water
  - Copper
  - Mercury
  - Nitrate + Nitrite
  - Sodium
  - Nickel
  - Nitrite
  - Nitrate
  - PAHs by HPLC
  - Lead
  - Antimony
  - Selenium
  - Thallium
  - Total Trihalomethanes
  - Volatile Organics

David Webb

Chief, Environmental Science Services

P. Scott Hassett

Secretary

Certification or registration by the State of Wisconsin is not an endorsement or guartantee of the validity of data generated by this laboratory. This certificate is valid unless revoked or suspended and supersedes all previous certificates.

State of Wisconsin \ DEPARTMENT OF NATURAL RESOURCES

Scott McCallum, Governor
Darrell Bazzell, Secretary

101 S. Webster St.
Box 7921
Madison, Wisconsin 53707-7921
Telephone 608-266-2621
FAX 608-267-3579
TTY 608-267-6897

November 20, 2002

Ms. Julie Trivedi
En Chem, Inc.
1241 Bellevue Street.
Green Bay, WI 54302

FID: 445134030

Subject: Recognition of Low-Level Mercury Analysis Capability at Kimberly Facility Effective November 20, 2002

Dear Ms. Trivedi:

I am pleased to inform you that effective November 20,2002, the Wisconsin Department of Natural Resources (DNR) recognizes the capabilities of the En Chem laboratory located at 1090 Kennedy Avenue in Kimberly, WI to perform low-level mercury determinations in water matrices. We understand that En Chem transferred the instrumentation and procedures used at the Madison laboratory to Kimberly. The SOP is equivalent to EPA Method 1631 approved in NR 219 Wis. Adm. Code. We will continue to recognize this capability as long as the following conditions are met:

1. En Chem will notify DNR if the method detection limit (MDL) for water or wastewater matrices changes significantly from what was provided in the request for recognition (reagent water = 0.17 ng/L and wastewater = 0.39ng/L.).

2. Mercury contamination in the laboratory and analytical system is effectively controlled so that contamination or carry-over is not introduced into samples or quality control.

3. Recoveries for laboratory control samples (fortified reagent water) at an appropriate concentration fall between 79 and 121%.

4. En Chem - Kimberly continues to meet the criteria established in NR 106.145 (10).
   a. Matrix spike recoveries routinely fall between 75 and 125%. Results outside of this range may be acceptable only on a case-by-case basis.
   b. Method blanks analyzed concurrently with samples are reported with sample results and mercury concentrations in the method blank are not subtracted unless the concentration is less than the MDL, 0.5 ng/L, or 5% of the sample concentration, whichever is greater.
   c. Field blanks associated with samples are reported.
   d. Results for samples and blanks are reported to the laboratory's MDL.

5. Containers provided for samples and blanks are sufficiently free of mercury contamination. To the extent practicable, sampling procedures provided to clients should ensure that contamination incurred during collection will not significantly affect results.

The Department reserves the right to rescind this recognition or to revise the specified performance criteria based on data quality needs. This recognition is not transferable to another facility.

Since the revision to NR 219 Wis. Adm. Code became effective, EPA promulgated Revision E to method 1631. In the October 30, 2002 Federal Register, EPA removed the requirement to refrigerate samples prior to preservation and extended the holding time to 28 days if the sample is oxidized in the same bottle. The holding time for preserved samples remains at 90 days. DNR will defer to the federal regulations for preservation and holding time requirements until NR 219 is revised. Both Revision D and E provide for method flexibility in section 9.1.2. Please note that although NR 219 recognizes a similar degree of flexibility in modifying the method, if the laboratory chooses to eliminate the purge and trap or change detectors, then the method reported should be something other than 1631.

The EnChem, Inc.facility in Kimberly, WI is now listed as a laboratory that is capable of performing low-level mercury determinations. Based on the data your laboratory provided, we will list your reagent water MDL as 0.17 ng/L and the wastewater matrix MDL as 0.39 ng/L. The MDLs included on your listing may be updated by submitting additional MDL studies.

We value your laboratory's efforts to develop method 1631 for mercury in a clean laboratory environment. Your laboratory's detection limits will enable regulated facilities to obtain quantifiable mercury results for most, if not all, wastewater effluents.

Sincerely,

David Webb

David Webb, Chief
Environmental Science Services Section
Bureau of Integrated Science Services

cc: Art Lautenbach, EnChem
Tom Mugan, WT/2
Donalea Dinsmore, SS/BW

c:\data\labcert\Hg-EnChem Go.doc

D H E C

PROMOTE PROTECT PROSPER

South Carolina Department of Health and Environmental Control

Environmental Laboratory Certification Program

In accordance with the provisions of Regulation 61 - 81, entitled "State Environmental Laboratory Certification Regulation,"

EN CHEM INC MADISON
525 SCIENCE DR
MADISON, WISCONSIN 53711

is hereby certified to perform analyses as documented on the attached parameter list(s). This certification does not guarantee validity of data generated, but indicates the laboratory's adherence to prescribed methodology, quality control, records keeping, and reporting procedures. This certificate is the property of S.C. DHEC and must be surrendered upon demand. This certificate is non-transferable and is valid only for the parameters and methodology listed on the attached parameter list(s).

Laboratory Director: DAVID TURRIFF PH D
Certifying Authority: WI
Date of Issue: September 03, 2002
Date of Expiration: August 31, 2003
Certificate Number: 83001001

Director
Office of Environmental Laboratory Certification

SOUTH CAROLINA DEPARTMENT OF HEALTH AND ENVIRONMENTAL CONTROL
ENVIRONMENTAL LABORATORY CERTIFICATION PROGRAM

EN CHEM INC MADISON (Laboratory ID 83001)
Laboratory Director: DAVID TURRIFF PH D
Certifying Authority: WI
Certificate Number: 83001001

Date of Issue: September 03, 2002
Expiration Date: August 31, 2003

CLEAN WATER ACT

HERBICIDES

CHLORINATED PHENOXY ACID HERBICIDES	SM 6640B

INORGANIC - MINERAL

ACIDITY	EPA 305.1
CHLORIDE	EPA 300.0
FLUORIDE	EPA 300.0
SULFATE	EPA 300.0

INORGANIC - MISCELLANEOUS

BROMIDE	EPA 300.0
CYANIDE	EPA 335.3
OIL & GREASE	EPA 413.1
SULFIDE	EPA 376.1

INORGANIC - NUTRIENT

NITRATE-NITROGEN	EPA 300.0
NITRATE-NITROGEN	NO3-NO2 MINUS NO2
NITRITE-NITROGEN	EPA 300.0
NITRITE-NITROGEN	EPA 354.1

INORGANIC - RESIDUE

RESIDUE, FILTERABLE (TDS)	EPA 160.1
RESIDUE, NONFILTERABLE (TSS)	EPA 160.2
RESIDUE, TOTAL (TS)	EPA 160.3
RESIDUE, VOLATILE (VS)	EPA 160.4

INORGANIC - TRACE METAL

ALUMINUM	EPA 200.7
ANTIMONY	EPA 200.7
ARSENIC	EPA 200.7
BARIUM	EPA 200.7
BERYLLIUM	EPA 200.7
BORON	EPA 200.7
CADMIUM	EPA 200.7
CALCIUM	EPA 200.7
CHROMIUM	EPA 200.7
CHROMIUM, HEXAVALENT	EPA 218.4
COBALT	EPA 200.7
COPPER	EPA 200.7
IRON	EPA 200.7
LEAD	EPA 200.7

SOUTH CAROLINA DEPARTMENT OF HEALTH AND ENVIRONMENTAL CONTROL
ENVIRONMENTAL LABORATORY CERTIFICATION PROGRAM

EN CHEM INC MADISON (Laboratory ID 83001)
Laboratory Director: DAVID TURRIFF PH D
Certifying Authority: WI
Certificate Number: 83001001

Date of Issue: September 03, 2002
Expiration Date: August 31, 2003

CLEAN WATER ACT

INORGANIC - TRACE METAL

MAGNESIUM	EPA 200.7
MANGANESE	EPA 200.7
MERCURY	EPA 245.1
MOLYBDENUM	EPA 200.7
NICKEL	EPA 200.7
POTASSIUM	EPA 200.7
SELENIUM	EPA 200.7
SILVER	EPA 200.7
SODIUM	EPA 200.7
THALLIUM	EPA 200.7
TIN	EPA 200.7
VANADIUM	EPA 200.7
ZINC	EPA 200.7

PCBS AND PESTICIDES

ORGANOCHLORINE PESTICIDES & PCBS - GC/ECD	EPA 608

SEMI-VOLATILES

BASE/NEUTRALS AND ACIDS - GC/MS	EPA 625
POLY. AROM. HYDROC. (PAHS)-GC/FID OR HPLC	EPA 610

VOLATILES (VOCS)

PURGEABLES - GC/MS	EPA 624

SOLID & HAZARDOUS WASTES

INORGANIC - DEMAND

TOTAL ORGANIC CARBON (TOC)	EPA 9060

INORGANIC - HAZARDOUS WASTE CHARACTERISTICS

IGNITABILITY (SETAFLASH)	EPA 1020A
REACTIVITY - CYANIDE	S.7.3. - SW846
REACTIVITY - SULFIDE	S.7.3. - SW846
SYNTHETIC PREC. LEACHING PROC.	EPA 1312
TCLP - BOTTLE EXTRACTION	EPA 1311
TCLP - ZERO HEADSPACE	EPA 1311

INORGANIC - MINERAL

CHLORIDE	EPA 9056
CHLORIDE	EPA 9250

SOUTH CAROLINA DEPARTMENT OF HEALTH AND ENVIRONMENTAL CONTROL
ENVIRONMENTAL LABORATORY CERTIFICATION PROGRAM

EN CHEM INC MADISON (Laboratory ID 83001)
Laboratory Director: DAVID TURRIFF PH D
Certifying Authority: WI
Certificate Number: 83001001

Date of Issue: September 03, 2002
Expiration Date: August 31, 2003

SOLID & HAZARDOUS WASTES

INORGANIC - MINERAL

FLUORIDE	EPA 9056
FLUORIDE	EPA 9214
SULFATE	EPA 9036
SULFATE	EPA 9056

INORGANIC - MISCELLANEOUS

BROMIDE	EPA 9056
CYANIDE	EPA 9012A
CYANIDE AMEN. TO CHLORINATION	EPA 9012A
PHENOLICS, TOTAL RECOVERABLE	EPA 9066
SULFIDE	EPA 9034
SULFIDE DISTILLATION	EPA 9030B

INORGANIC - NUTRIENT

NITRATE-NITROGEN	EPA 9056
NITRITE-NITROGEN	EPA 9056

INORGANIC - TRACE METAL

ALUMINUM	EPA 6010B
ALUMINUM	EPA 6020
ANTIMONY	EPA 6010B
ANTIMONY	EPA 6020
ANTIMONY	EPA 7041
ARSENIC	EPA 6010B
ARSENIC	EPA 6020
ARSENIC	EPA 7060A
BARIUM	EPA 6010B
BARIUM	EPA 6020
BERYLLIUM	EPA 6010B
BERYLLIUM	EPA 6020
CADMIUM	EPA 6010B
CADMIUM	EPA 6020
CADMIUM	EPA 7131A
CALCIUM	EPA 6010B
CHROMIUM	EPA 6010B
CHROMIUM	EPA 6020
CHROMIUM, HEXAVALENT	EPA 7196A
COBALT	EPA 6010B
COBALT	EPA 6020
COPPER	EPA 6010B
COPPER	EPA 6020
IRON	EPA 6010B
LEAD	EPA 6010B

SOUTH CAROLINA DEPARTMENT OF HEALTH AND ENVIRONMENTAL CONTROL
ENVIRONMENTAL LABORATORY CERTIFICATION PROGRAM

EN CHEM INC MADISON (Laboratory ID 83001)
Laboratory Director: DAVID TURRIFF PH D
Certifying Authority: WI
Certificate Number: 83001001

Date of Issue: September 03, 2002
Expiration Date: August 31, 2003

SOLID & HAZARDOUS WASTES

INORGANIC - TRACE METAL

LEAD	EPA 6020
LEAD	EPA 7421
MAGNESIUM	EPA 6010B
MANGANESE	EPA 6010B
MANGANESE	EPA 6020
MERCURY	EPA 7470A
MERCURY	EPA 7471A
MOLYBDENUM	EPA 6010B
NICKEL	EPA 6010B
NICKEL	EPA 6020
POTASSIUM	EPA 6010B
SELENIUM	EPA 6010B
SELENIUM	EPA 7740
SILVER	EPA 6010B
SILVER	EPA 6020
SODIUM	EPA 6010B
THALLIUM	EPA 6010B
THALLIUM	EPA 6020
THALLIUM	EPA 7841
TIN	EPA 6010B
VANADIUM	EPA 6010B
ZINC	EPA 6010B
ZINC	EPA 6020

PCBS AND PESTICIDES

ORGANOCHLORINE PESTICIDES BY GC: CAP.COL.	EPA 8081A	EPA 3510C
ORGANOCHLORINE PESTICIDES BY GC: CAP.COL.	EPA 8081A	EPA 3550B
POLYCHLORINATED BIPHENYLS BY GC	EPA 8082	EPA 3510C
POLYCHLORINATED BIPHENYLS BY GC	EPA 8082	EPA 3550B

SEMI-VOLATILES

POLYNUCLEAR AROMATIC HYDROCARBONS BY HPLC	EPA 8310	EPA 3510C
POLYNUCLEAR AROMATIC HYDROCARBONS BY HPLC	EPA 8310	EPA 3550B
SEMIVOLATILE ORGANICS BY GC/MS:CAP. COL.	EPA 8270C	EPA 3510C
SEMIVOLATILE ORGANICS BY GC/MS:CAP. COL.	EPA 8270C	EPA 3550B

VOLATILES (VOCS)

VOLATILE ORGANICS BY GC/MS: CAPILLARY COL.	EPA 8260B	EPA 5030B
VOLATILE ORGANICS BY GC/MS: CAPILLARY COL.	EPA 8260B	EPA 5035

SOUTH CAROLINA DEPARTMENT OF HEALTH AND ENVIRONMENTAL CONTROL
ENVIRONMENTAL LABORATORY CERTIFICATION PROGRAM

EN CHEM INC MADISON (Laboratory ID 83001)
Certifying Authority: WI
Certificate Number: 83001001

Date of Issue: September 03, 2002
Expiration Date: August 31, 2003

CLEAN WATER ACT

----------HERBICIDES----------

SM 6640B

2,4,5-T
2,4,5-TP (SILVEX)
2,4-D

--------PCBS AND PESTICIDES--------

EPA 608

4,4'-DDD
4,4'-DDE
4,4'-DDT
ALDRIN
ALPHA-BHC
BETA-BHC
CHLORDANE
DELTA-BHC
DIELDRIN
ENDOSULFAN I
ENDOSULFAN II
ENDOSULFAN SULFATE
ENDRIN
ENDRIN ALDEHYDE
GAMMA-BHC (LINDANE)
HEPTACHLOR
HEPTACHLOR EPOXIDE
METHOXYCHLOR
PCB-1016 (AROCLOR-1016)
PCB-1221 (AROCLOR-1221)
PCB-1232 (AROCLOR-1232)
PCB-1242 (AROCLOR-1242)
PCB-1248 (AROCLOR-1248)
PCB-1254 (AROCLOR-1254)
PCB-1260 (AROCLOR-1260)
TOXAPHENE

----------SEMI-VOLATILES----------

EPA 610

ACENAPHTHENE
ACENAPHTHYLENE
ANTHRACENE
BENZO(A)ANTHRACENE
BENZO(A)PYRENE
BENZO(B)FLUORANTHENE
BENZO(G,H,I)PERYLENE
BENZO(K)FLUORANTHENE
CHRYSENE
DIBENZO(A,H)ANTHRACENE
FLUORANTHENE
FLUORENE
INDENO(1,2,3-CD)PYRENE
NAPHTHALENE
PHENANTHRENE
PYRENE

EPA 625

1,2,4-TRICHLOROBENZENE
1,2-DICHLOROBENZENE
1,3-DICHLOROBENZENE
1,4-DICHLOROBENZENE
2,4,6-TRICHLOROPHENOL
2,4-DICHLOROPHENOL
2,4-DIMETHYLPHENOL
2,4-DINITROPHENOL
2,4-DINITROTOLUENE
2,6-DINITROTOLUENE
2-CHLORONAPHTHALENE
2-CHLOROPHENOL
2-METHYL-4,6-DINITROPHENOL
2-NITROPHENOL
3,3-DICHLOROBENZIDINE
4-BROMOPHENYLPHENYL ETHER
4-CHLORO-3-METHYLPHENOL
4-CHLOROPHENYL PHENYL ETHER
4-NITROPHENOL
ACENAPHTHENE
ACENAPHTHYLENE
ANTHRACENE
BENZIDINE
BENZO(A)ANTHRACENE
BENZO(A)PYRENE
BENZO(B)FLUORANTHENE
BENZO(G,H,I)PERYLENE
BENZO(K)FLUORANTHENE
BENZYL BUTYL PHTHALATE
BIS(2-CHLOROETHOXY)METHANE
BIS(2-CHLOROETHYL)ETHER
BIS(2-CHLOROISOPROPYL)ETHER
BIS(2-ETHYLHEXYL)PHTHALATE
CHRYSENE
DI-N-BUTYL PHTHALATE
DI-N-OCTYL PHTHALATE
DIBENZO(A,H)ANTHRACENE
DIETHYL PHTHALATE

EPA 625

DIMETHYL PHTHALATE
FLUORANTHENE
FLUORENE
HEXACHLOROBENZENE
HEXACHLOROBUTADIENE
HEXACHLOROCYCLOPENTADIENE
HEXACHLOROETHANE
INDENO(1,2,3-CD)PYRENE
ISOPHORONE
N-NITROSODI-N-PROPYLAMINE
N-NITROSODIMETHYLAMINE
N-NITROSODIPHENYLAMINE
NAPHTHALENE
NITROBENZENE
PENTACHLOROPHENOL
PHENANTHRENE
PHENOL
PYRENE

----------VOLATILES (VOCS)----------

EPA 624

1,1,1-TRICHLOROETHANE
1,1,2,2-TETRACHLOROETHANE
1,1,2-TRICHLOROETHANE
1,1-DICHLOROETHANE
1,1-DICHLOROETHENE
1,2-DICHLOROETHANE
1,2-DICHLOROPROPANE
BENZENE
BROMODICHLOROMETHANE
BROMOFORM
BROMOMETHANE
CARBON TETRACHLORIDE
CHLOROBENZENE
CHLOROETHANE
CHLOROFORM
CHLOROMETHANE
CIS-1,3-DICHLOROPROPENE
DIBROMOCHLOROMETHANE
DICHLORODIFLUOROMETHANE
ETHYLBENZENE
METHYLENE CHLORIDE
NAPHTHALENE
TETRACHLOROETHENE
TOLUENE
TRANS-1,2-DICHLOROETHENE
TRANS-1,3-DICHLOROPROPENE

EPA 624

TRICHLOROETHENE
TRICHLOROFLUOROMETHANE
VINYL CHLORIDE
XYLENE, TOTAL

SOUTH CAROLINA DEPARTMENT OF HEALTH AND ENVIRONMENTAL CONTROL
ENVIRONMENTAL LABORATORY CERTIFICATION PROGRAM

EN CHEM INC MADISON (Laboratory ID 83001)
Certifying Authority: WI
Certificate Number: 83001001

Date of Issue: September 03, 2002
Expiration Date: August 31, 2003

SOLID & HAZARDOUS WASTES

--------PCBS AND PESTICIDES--------

EPA 8081A
EPA 3510C

4,4'-DDD
4,4'-DDE
4,4'-DDT
ALDRIN
ALPHA-BHC
ALPHA-CHLORDANE
BETA-BHC
CHLORDANE
DELTA-BHC
DIELDRIN
ENDOSULFAN I
ENDOSULFAN II
ENDOSULFAN SULFATE
ENDRIN
ENDRIN ALDEHYDE
ENDRIN KETONE
GAMMA-BHC (LINDANE)
GAMMA-CHLORDANE
HEPTACHLOR
HEPTACHLOR EPOXIDE
METHOXYCHLOR
TOXAPHENE

EPA 8081A
EPA 3550B

4,4'-DDD
4,4'-DDE
4,4'-DDT
ALDRIN
ALPHA-BHC
ALPHA-CHLORDANE
BETA-BHC
CHLORDANE
DELTA-BHC
DIELDRIN
ENDOSULFAN I
ENDOSULFAN II
ENDOSULFAN SULFATE
ENDRIN
ENDRIN ALDEHYDE
ENDRIN KETONE
GAMMA-BHC (LINDANE)
GAMMA-CHLORDANE
HEPTACHLOR
HEPTACHLOR EPOXIDE

EPA 8081A -
EPA 3550B

METHOXYCHLOR
TOXAPHENE

EPA 8082
EPA 3510C

PCB-1016 (AROCLOR-1016)
PCB-1221 (AROCLOR-1221)
PCB-1232 (AROCLOR-1232)
PCB-1242 (AROCLOR-1242)
PCB-1248 (AROCLOR-1248)
PCB-1254 (AROCLOR-1254)
PCB-1260 (AROCLOR-1260)

EPA 8082
EPA 3550B

PCB-1016 (AROCLOR-1016)
PCB-1221 (AROCLOR-1221)
PCB-1232 (AROCLOR-1232)
PCB-1242 (AROCLOR-1242)
PCB-1248 (AROCLOR-1248)
PCB-1254 (AROCLOR-1254)
PCB-1260 (AROCLOR-1260)

----------SEMI-VOLATILES----------

EPA 8270C
EPA 3510C

1,2,4,5-TETRACHLOROBENZENE
1,2,4-TRICHLOROBENZENE
1,2-DICHLOROBENZENE
1,2-DIPHENYLHYDRAZINE
1,3,5-TRINITROBENZENE
1,3-DICHLOROBENZENE
1,3-DINITROBENZENE
1,4-DICHLOROBENZENE
1,4-NAPHTHOQUINONE
1-NAPHTHYLAMINE
2,3,4,6-TETRACHLOROPHENOL
2,4,5-TRICHLOROPHENOL
2,4,6-TRICHLOROPHENOL
2,4-DICHLOROPHENOL
2,4-DIMETHYLPHENOL
2,4-DINITROPHENOL
2,4-DINITROTOLUENE
2,6-DICHLOROPHENOL

EPA 8270C
EPA 3510C

2,6-DINITROTOLUENE
2-ACETYLAMINOFLUORENE
2-CHLORONAPHTHALENE
2-CHLOROPHENOL
2-METHYLNAPHTHALENE
2-METHYLPHENOL
2-NAPHTHYLAMINE
2-NITROANILINE
2-NITROPHENOL
2-PICOLINE
3,3-DICHLOROBENZIDINE
3,3-DIMETHYLBENZIDINE
3-METHYLCHOLANTHRENE
3-METHYLPHENOL
3-NITROANILINE
4,6-DINITRO-2-METHYLPHENOL
4-AMINOBIPHENYL
4-BROMOPHENYLPHENYL ETHER
4-CHLORO-3-METHYLPHENOL
4-CHLOROANILINE
4-CHLOROPHENYL PHENYL ETHER
4-METHYLPHENOL
4-NITROANILINE
4-NITROPHENOL
4-NITROQUINOLINE-1-OXIDE
5-NITRO-O-TOLUIDINE
7,12-DIMETHYLBENZ(A)ANTHRACENE
A,A-DIMETHYLPHENETHYLAMINE
ACENAPHTHENE
ACENAPHTHYLENE
ACETOPHENONE
ANILINE
ANTHRACENE
ARAMITE
BENZO(A)ANTHRACENE
BENZO(A)PYRENE
BENZO(B)FLUORANTHENE
BENZO(G,H,I)PERYLENE
BENZO(K)FLUORANTHENE
BENZOIC ACID
BENZYL ALCOHOL
BIS(2-CHLOROETHOXY)METHANE
BIS(2-CHLOROETHYL)ETHER
BIS(2-CHLOROISOPROPYL)ETHER
BIS(2-ETHYLHEXYL)PHTHALATE
BUTYL BENZYL PHTHALATE
CHLOROBENZILATE
CHRYSENE

EPA 8270C
EPA 3510C

DI-N-BUTYL PHTHALATE
DI-N-OCTYL PHTHALATE
DIALLATE
DIBENZ(A,J)ACRIDINE
DIBENZO(A,H)ANTHRACENE
DIBENZOFURAN
DIETHYL PHTHALATE
DIMETHOATE
DIMETHYL PHTHALATE
DIMETHYLAMINOAZOBENZENE
DINOSEB
DIPHENYLAMINE
DISULFOTON
ETHYL METHANESULFONATE
FAMPHUR
FLUORANTHENE
FLUORENE
HEXACHLOROBENZENE
HEXACHLOROBUTADIENE
HEXACHLOROCYCLOPENTADIENE
HEXACHLOROETHANE
HEXACHLOROPHENE
HEXACHLOROPROPENE
INDENO(1,2,3-CD)PYRENE
ISODRIN
ISOPHORONE
ISOSAFROLE
METHAPYRILENE
METHYL METHANESULFONATE
METHYL PARATHION
N-NITROSODI-N-PROPYLAMINE
N-NITROSODIETHYLAMINE
N-NITROSODIMETHYLAMINE
N-NITROSODIPHENYLAMINE
N-NITROSOMETHYLETHYLAMINE
N-NITROSOMORPHOLINE
N-NITROSOPIPERIDINE
N-NITROSOPYRROLIDINE
NAPHTHALENE
NITROBENZENE
O,O,O-TRIETHYLPHOSPHOROTHIOATE
O-TOLUIDINE
PARATHION
PENTACHLOROBENZENE
PENTACHLORONITROBENZENE
PENTACHLOROPHENOL
PHENACETIN
PHENANTHRENE

SOUTH CAROLINA DEPARTMENT OF HEALTH AND ENVIRONMENTAL CONTROL
ENVIRONMENTAL LABORATORY CERTIFICATION PROGRAM

EN CHEM INC MADISON (Laboratory ID 83001)
Certifying Authority: WI
Certificate Number: 83001001

Date of Issue: September 03, 2002
Expiration Date: August 31, 2003

SOLID & HAZARDOUS WASTES

----------SEMI-VOLATILES----------

EPA 8270C
EPA 3510C

PHENOL
PHORATE
PRONAMIDE
PYRENE
PYRIDINE
SAFROLE
THIONAZIN

EPA 8270C
EPA 3550B

1,2,4,5-TETRACHLOROBENZENE
1,2,4-TRICHLOROBENZENE
1,2-DICHLOROBENZENE
1,2-DIPHENYLHYDRAZINE
1,3,5-TRINITROBENZENE
1,3-DICHLOROBENZENE
1,3-DINITROBENZENE
1,4-DICHLOROBENZENE
1,4-NAPHTHOQUINONE
1-NAPHTHYLAMINE
2,3,4,6-TETRACHLOROPHENOL
2,4,5-TRICHLOROPHENOL
2,4,6-TRICHLOROPHENOL
2,4-DICHLOROPHENOL
2,4-DIMETHYLPHENOL
2,4-DINITROPHENOL
2,4-DINITROTOLUENE
2,6-DICHLOROPHENOL
2,6-DINITROTOLUENE
2-ACETYLAMINOFLUORENE
2-CHLORONAPHTHALENE
2-CHLOROPHENOL
2-METHYLNAPHTHALENE
2-METHYLPHENOL
2-NAPHTHYLAMINE
2-NITROANILINE
2-NITROPHENOL
2-PICOLINE
3,3-DICHLOROBENZIDINE
3,3-DIMETHYLBENZIDINE
3-METHYLCHOLANTHRENE
3-METHYLPHENOL
3-NITROANILINE
4,6-DINI[illegible]2-METHYLPHENOL
4-AMINOB[illegible]YL

EPA 8270C
EPA 3550B

4-BROMOPHENYLPHENYL ETHER
4-CHLORO-3-METHYLPHENOL
4-CHLOROANILINE
4-CHLOROPHENYL PHENYL ETHER
4-METHYLPHENOL
4-NITROANILINE
4-NITROPHENOL
4-NITROQUINOLINE-1-OXIDE
5-NITRO-O-TOLUIDINE
7,12-DIMETHYLBENZ(A)ANTHRACENE
A,A-DIMETHYLPHENETHYLAMINE
ACENAPHTHENE
ACENAPHTHYLENE
ACETOPHENONE
ANILINE
ANTHRACENE
ARAMITE
BENZO(A)ANTHRACENE
BENZO(A)PYRENE
BENZO(B)FLUORANTHENE
BENZO(G,H,I)PERYLENE
BENZO(K)FLUORANTHENE
BENZOIC ACID
BENZYL ALCOHOL
BIS(2-CHLOROETHOXY)METHANE
BIS(2-CHLOROETHYL)ETHER
BIS(2-CHLOROISOPROPYL)ETHER
BIS(2-ETHYLHEXYL)PHTHALATE
BUTYL BENZYL PHTHALATE
CHLOROBENZILATE
CHRYSENE
DI-N-BUTYL PHTHALATE
DI-N-OCTYL PHTHALATE
DIALLATE
DIBENZ(A,J)ACRIDINE
DIBENZO(A,H)ANTHRACENE
DIBENZOFURAN
DIETHYL PHTHALATE
DIMETHOATE
DIMETHYL PHTHALATE
DIMETHYLAMINOAZOBENZENE
DINOSEB
DIPHENYLAMINE
DISULFOTON
ETHYL METHANESULFONATE
FAMPHUR
FLUORANTHENE
FLUORENE

EPA 8270C
EPA 3550B

HEXACHLOROBENZENE
HEXACHLOROBUTADIENE
HEXACHLOROCYCLOPENTADIENE
HEXACHLOROETHANE
HEXACHLOROPHENE
HEXACHLOROPROPENE
INDENO(1,2,3-CD)PYRENE
ISODRIN
ISOPHORONE
ISOSAFROLE
KEPONE
METHAPYRILENE
METHYL METHANESULFONATE
METHYL PARATHION
N-NITROSODI-N-PROPYLAMINE
N-NITROSODIBUTYLAMINE
N-NITROSODIETHYLAMINE
N-NITROSODIMETHYLAMINE
N-NITROSODIPHENYLAMINE
N-NITROSOMETHYLETHYLAMINE
N-NITROSOMORPHOLINE
N-NITROSOPIPERIDINE
N-NITROSOPYRROLIDINE
NAPHTHALENE
NITROBENZENE
O,O,O-TRIETHYLPHOSPHOROTHIOATE
O-TOLUIDINE
PARATHION
PENTACHLOROBENZENE
PENTACHLORONITROBENZENE
PENTACHLOROPHENOL
PHENACETIN
PHENANTHRENE
PHENOL
PHORATE
PRONAMIDE
PYRENE
PYRIDINE
SAFROLE
THIONAZIN

EPA 8310
EPA 3510C

ACENAPHTHENE
ACENAPHTHYLENE
ANTHRACENE
[illegible]ZO(A)ANTHRACENE

EPA 8310
EPA 3510C

BENZO(A)PYRENE
BENZO(B)FLUORANTHENE
BENZO(G,H,I)PERYLENE
BENZO(K)FLUORANTHENE
CHRYSENE
DIBENZO(A,H)ANTHRACENE
FLUORANTHENE
FLUORENE
INDENO(1,2,3-CD)PYRENE
NAPHTHALENE
PHENANTHRENE
PYRENE

EPA 8310
EPA 3550B

ACENAPHTHENE
ACENAPHTHYLENE
ANTHRACENE
BENZO(A)ANTHRACENE
BENZO(A)PYRENE
BENZO(B)FLUORANTHENE
BENZO(G,H,I)PERYLENE
BENZO(K)FLUORANTHENE
CHRYSENE
DIBENZO(A,H)ANTHRACENE
FLUORANTHENE
FLUORENE
INDENO(1,2,3-CD)PYRENE
NAPHTHALENE
PHENANTHRENE
PYRENE

----------VOLATILES (VOCS)---------

EPA 8260B
EPA 5030B

1,1,1,2-TETRACHLOROETHANE
1,1,1-TRICHLOROETHANE
1,1,2,2-TETRACHLOROETHANE
1,1,2-TRICHLOROETHANE
1,1-DICHLOROETHANE
1,1-DICHLOROETHENE
1,1-DICHLOROPROPENE
1,2,3-TRICHLOROBENZENE
1,2,3-TRICHLOROPROPANE
1,2,4-TRICHLOROBENZENE

SOUTH CAROLINA DEPARTMENT OF HEALTH AND ENVIRONMENTAL CONTROL
ENVIRONMENTAL LABORATORY CERTIFICATION PROGRAM

EN CHEM INC MADISON (Laboratory ID 83001)
Certifying Authority: WI
Certificate Number: 83001001

Date of Issue: September 03, 2002
Expiration Date: August 31, 2003

SOLID & HAZARDOUS WASTES

----------VOLATILES (VOCS)---------

EPA 8260B
EPA 5030B

1,2,4-TRIMETHYLBENZENE
1,2-DIBROMO-3-CHLOROPROPANE(DBCP)
1,2-DIBROMOETHANE (EDB)
1,2-DICHLOROBENZENE
1,2-DICHLOROETHANE
1,2-DICHLOROPROPANE
1,3,5-TRIMETHYLBENZENE
1,3-DICHLOROBENZENE
1,3-DICHLOROPROPANE
1,4-DICHLOROBENZENE
2,2-DICHLOROPROPANE
2-CHLOROETHYLVINYL ETHER
2-CHLOROTOLUENE
2-HEXANONE
4-CHLOROTOLUENE
4-METHYL-2-PENTANONE
ACETONE
ACETONITRILE
ACROLEIN
ACRYLONITRILE
ALLYL CHLORIDE
BENZENE
BROMOBENZENE
BROMOCHLOROMETHANE
BROMODICHLOROMETHANE
BROMOFORM
BROMOMETHANE
CARBON DISULFIDE
CARBON TETRACHLORIDE
CHLOROBENZENE
CHLOROETHANE
CHLOROFORM
CHLOROMETHANE
CHLOROPRENE
CIS-1,2-DICHLOROETHENE
CIS-1,3-DICHLOROPROPENE
CIS-1,4-DICHLORO-2-BUTENE
DIBROMOCHLOROMETHANE
DIBROMOFLUOROMETHANE
DIBROMOMETHANE
DICHLORODIFLUOROMETHANE
DIETHYL ETHER
ETHYL METHACRYLATE
ETHYLBENZENE
HEXACHLOROBUTADIENE
HEXACHLOROETHANE

EPA 8260B
EPA 5030B

IODOMETHANE
ISOBUTYL ALCOHOL
ISOPROPYLBENZENE
METHACRYLONITRILE
METHYL ETHYL KETONE (MEK)
METHYL METHACRYLATE
METHYL TERT BUTYL ETHER (MTBE)
METHYLENE CHLORIDE
N-BUTYLBENZENE
N-PROPYLBENZENE
NAPHTHALENE
P-ISOPROPYLTOLUENE
PROPIONITRILE
SEC-BUTYLBENZENE
STYRENE
TERT-BUTYLBENZENE
TETRACHLOROETHENE
TOLUENE
TRANS-1,2-DICHLOROETHENE
TRANS-1,3-DICHLOROPROPENE
TRANS-1,4-DICHLORO-2-BUTENE
TRICHLOROETHENE
TRICHLOROFLUOROMETHANE
VINYL ACETATE
VINYL CHLORIDE
XYLENE, TOTAL

EPA 8260B
EPA 5035

1,1,1,2-TETRACHLOROETHANE
1,1,1-TRICHLOROETHANE
1,1,2,2-TETRACHLOROETHANE
1,1,2-TRICHLOROETHANE
1,1-DICHLOROETHANE
1,1-DICHLOROETHENE
1,1-DICHLOROPROPENE
1,2,3-TRICHLOROBENZENE
1,2,3-TRICHLOROPROPANE
1,2,4-TRICHLOROBENZENE
1,2,4-TRIMETHYLBENZENE
1,2-DIBROMO-3-CHLOROPROPANE(DBCP)
1,2-DIBROMOETHANE (EDB)
1,2-DICHLOROBENZENE
1,2-DICHLOROETHANE
1,2-DICHLOROPROPANE
1,3,5-TRIMETHYLBENZENE
1,3-DICHLOROBENZENE

EPA 8260B
EPA 5035

1,3-DICHLOROPROPANE
1,4-DICHLOROBENZENE
2,2-DICHLOROPROPANE
2-CHLOROETHYLVINYL ETHER
2-CHLOROTOLUENE
2-HEXANONE
4-CHLOROTOLUENE
4-METHYL-2-PENTANONE
ACETONE
ACROLEIN
ACRYLONITRILE
ALLYL CHLORIDE
BENZENE
BROMOBENZENE
BROMOCHLOROMETHANE
BROMODICHLOROMETHANE
BROMOFORM
BROMOMETHANE
CARBON DISULFIDE
CARBON TETRACHLORIDE
CHLOROBENZENE
CHLOROETHANE
CHLOROFORM
CHLOROMETHANE
CHLOROPRENE
CIS-1,2-DICHLOROETHENE
CIS-1,3-DICHLOROPROPENE
CIS-1,4-DICHLORO-2-BUTENE
DIBROMOCHLOROMETHANE
DIBROMOFLUOROMETHANE
DIBROMOMETHANE
DICHLORODIFLUOROMETHANE
DIETHYL ETHER
ETHYL METHACRYLATE
ETHYLBENZENE
HEXACHLOROBUTADIENE
HEXACHLOROETHANE
IODOMETHANE
ISOBUTYL ALCOHOL
ISOPROPYLBENZENE
METHACRYLONITRILE
METHYL ETHYL KETONE (MEK)
METHYL METHACRYLATE
METHYL TERT BUTYL ETHER (MTBE)
METHYLENE CHLORIDE
N-BUTYLBENZENE
N-PROPYLBENZENE
NAPHTHALENE

EPA 8260B
EPA 5035

P-ISOPROPYLTOLUENE
PENTACHLOROETHANE
PROPIONITRILE
SEC-BUTYLBENZENE
STYRENE
TERT-BUTYLBENZENE
TETRACHLOROETHENE
TOLUENE
TRANS-1,2-DICHLOROETHENE
TRANS-1,3-DICHLOROPROPENE
TRANS-1,4-DICHLORO-2-BUTENE
TRICHLOROETHENE
TRICHLOROFLUOROMETHANE
VINYL ACETATE
VINYL CHLORIDE
XYLENE, TOTAL

State of Louisiana

Department of Environmental Quality

M.J. "MIKE" FOSTER, JR.
GOVERNOR

J. DALE GIVENS
SECRETARY

CERTIFIED MAIL #7001 2510 0000 6144 9583
Return Receipt Requested

August 8, 2002

AI #85085 **LELAP Certificate #03091**

Ms. Julie Trivedi
En Chem, Inc. - Madison
525 Science Drive
Madison, WI 53711

RE: Scope of Accreditation

Dear Ms. Trivedi:

In accordance with Louisiana Administrative Code, Title 33, Part I, Subpart 3, Laboratory Accreditation, the State of Louisiana formally recognizes that this laboratory has successfully completed the accreditation process and is technically competent to perform the environmental analyses listed on the scope of accreditation detailed in the attachment. Parameters or analytes that the laboratory has applied for accreditation not included in the scope of accreditation attachment are not certified.

If you have any questions, please contact the Louisiana Environmental Laboratory Accreditation Program at (225) 765-0582.

Sincerely,

Karen S Vanado for

Louis R. C. Johnson, Accreditation Officer
Louisiana Environmental Laboratory Accreditation Program

LRCJ:KV

Attachment

Louisiana Environmental Laboratory
LELAP
Accreditation Program

Laboratory Scope of Accreditation

Organization

03091 (608) 232-3300
En Chem, Inc. - Madison
525 Science Drive
Madison, WI 53711

RCRA Certification

Method Code	Method Ref	Analyte	Status	Type	AA
10118806	EPA 1311	TOXICITY CHARACTERISTIC LEACHING PROCEDURE	Accredited	STATE	
10155201	EPA 6010	Antimony	Accredited	STATE	
10155201	EPA 6010	Arsenic	Accredited	STATE	
10155201	EPA 6010	Barium	Accredited	STATE	
10155201	EPA 6010	Cadmium	Accredited	STATE	
10155201	EPA 6010	Chromium	Accredited	STATE	
10155201	EPA 6010	Lead	Accredited	STATE	
10155201	EPA 6010	Nickel	Accredited	STATE	
10155201	EPA 6010	Selenium	Accredited	STATE	
10155201	EPA 6010	Silver	Accredited	STATE	
10156000	EPA 6020	Antimony	Accredited	STATE	
10156000	EPA 6020	Arsenic	Accredited	STATE	
10156000	EPA 6020	Barium	Accredited	STATE	
10156000	EPA 6020	Cadmium	Accredited	STATE	
10156000	EPA 6020	Chromium	Accredited	STATE	
10156000	EPA 6020	Lead	Accredited	STATE	
10156000	EPA 6020	Nickel	Accredited	STATE	
10156000	EPA 6020	Selenium	Accredited	STATE	
10156000	EPA 6020	Silver	Accredited	STATE	
10158404	EPA 7041	Antimony	Accredited	STATE	
10158608	EPA 7060	Arsenic	Accredited	STATE	
10161009	EPA 7131	Cadmium	Accredited	STATE	
10161805	EPA 7191	Chromium	Accredited	STATE	
10162206	EPA 7196	Chromium VI	Accredited	STATE	
10164600	EPA 7421	Lead	Accredited	STATE	
10165603	EPA 7470	Mercury	Accredited	STATE	
10166004	EPA 7471	Mercury	Accredited	STATE	
10168602	EPA 7740	Selenium	Accredited	STATE	
10169809	EPA 7761	Silver	Accredited	STATE	
10178402	EPA 8081	4,4'-DDD	Accredited	STATE	
10178402	EPA 8081	4,4'-DDE	Accredited	STATE	
10178402	EPA 8081	4,4'-DDT	Accredited	STATE	
10178402	EPA 8081	Aldrin	Accredited	STATE	
10178402	EPA 8081	alpha-BHC (alpha-Hexachlorocyclohexane)	Accredited	STATE	
10178402	EPA 8081	alpha-Chlordane	Accredited	STATE	
10178402	EPA 8081	beta-BHC (beta-Hexachlorocyclohexane)	Accredited	STATE	
10178402	EPA 8081	delta-BHC	Accredited	STATE	
10178402	EPA 8081	Dieldrin	Accredited	STATE	
10178402	EPA 8081	Endosulfan I	Accredited	STATE	
10178402	EPA 8081	Endosulfan II	Accredited	STATE	
10178402	EPA 8081	Endosulfan sulfate	Accredited	STATE	

Organization

03091 **(608) 232-3300**

En Chem, Inc. - Madison
525 Science Drive
Madison, WI 53711

RCRA Certification

Method Code	Method Ref	Analyte	Status	Type	AA
10178402	EPA 8081	Endrin	Accredited	STATE	
10178402	EPA 8081	Endrin aldehyde	Accredited	STATE	
10178402	EPA 8081	Endrin ketone	Accredited	STATE	
10178402	EPA 8081	gamma-BHC (Lindane, gamma-HexachlorocyclohexanE)	Accredited	STATE	
10178402	EPA 8081	gamma-Chlordane	Accredited	STATE	
10178402	EPA 8081	Heptachlor	Accredited	STATE	
10178402	EPA 8081	Heptachlor epoxide	Accredited	STATE	
10178402	EPA 8081	Methoxychlor	Accredited	STATE	
10178402	EPA 8081	Toxaphene (Chlorinated camphene)	Accredited	STATE	
10179007	EPA 8082	Aroclor-1016 (PCB-1016)	Accredited	STATE	
10179007	EPA 8082	Aroclor-1221 (PCB-1221)	Accredited	STATE	
10179007	EPA 8082	Aroclor-1232 (PCB-1232)	Accredited	STATE	
10179007	EPA 8082	Aroclor-1242 (PCB-1242)	Accredited	STATE	
10179007	EPA 8082	Aroclor-1248 (PCB-1248)	Accredited	STATE	
10179007	EPA 8082	Aroclor-1254 (PCB-1254)	Accredited	STATE	
10179007	EPA 8082	Aroclor-1260 (PCB-1260)	Accredited	STATE	
10183003	EPA 8151	2,4,5-T	Accredited	STATE	
10183003	EPA 8151	2,4-D	Accredited	STATE	
10183003	EPA 8151	Dicamba	Accredited	STATE	
10183003	EPA 8151	Silvex (2,4,5-TP)	Accredited	STATE	
10184404	EPA 8260	1,1,1-Trichloroethane	Accredited	STATE	
10184404	EPA 8260	1,1,2,2-Tetrachloroethane	Accredited	STATE	
10184404	EPA 8260	1,1,2-Trichloroethane	Accredited	STATE	
10184404	EPA 8260	1,1-Dichloroethane	Accredited	STATE	
10184404	EPA 8260	1,1-Dichloroethylene	Accredited	STATE	
10184404	EPA 8260	1,2-Dichlorobenzene	Accredited	STATE	
10184404	EPA 8260	1,2-Dichloroethane	Accredited	STATE	
10184404	EPA 8260	1,2-Dichloropropane	Accredited	STATE	
10184404	EPA 8260	1,3-Dichlorobenzene	Accredited	STATE	
10184404	EPA 8260	1,4-Dichlorobenzene	Accredited	STATE	
10184404	EPA 8260	2-Chloroethyl vinyl ether	Accredited	STATE	
10184404	EPA 8260	Acrolein (Propenal)	Accredited	STATE	
10184404	EPA 8260	Acrylonitrile	Accredited	STATE	
10184404	EPA 8260	Benzene	Accredited	STATE	
10184404	EPA 8260	Bromodichloromethane	Accredited	STATE	
10184404	EPA 8260	Bromoform	Accredited	STATE	
10184404	EPA 8260	Carbon tetrachloride	Accredited	STATE	
10184404	EPA 8260	Chlorobenzene	Accredited	STATE	
10184404	EPA 8260	Chloroethane	Accredited	STATE	
10184404	EPA 8260	Chloroform	Accredited	STATE	
10184404	EPA 8260	cis-1,3-Dichloropropene	Accredited	STATE	

Organization

03091 **(608) 232-3300**

En Chem, Inc. - Madison
525 Science Drive
Madison, WI 53711

RCRA Certification

Method Code	Method Ref	Analyte	Status	Type	AA
10184404	EPA 8260	Dibromochloromethane	Accredited	STATE	
10184404	EPA 8260	Dichlorodifluoromethane	Accredited	STATE	
10184404	EPA 8260	Ethylbenzene	Accredited	STATE	
10184404	EPA 8260	Methyl bromide (Bromomethane)	Accredited	STATE	
10184404	EPA 8260	Methyl chloride (Chloromethane)	Accredited	STATE	
10184404	EPA 8260	Methylene chloride	Accredited	STATE	
10184404	EPA 8260	o-Xylene	Accredited	STATE	
10184404	EPA 8260	Tetrachloroethylene (Perchloroethylene)	Accredited	STATE	
10184404	EPA 8260	Toluene	Accredited	STATE	
10184404	EPA 8260	trans-1,3-Dichloropropylene	Accredited	STATE	
10184404	EPA 8260	Trichloroethene (Trichloroethylene)	Accredited	STATE	
10184404	EPA 8260	Trichlorofluoromethane	Accredited	STATE	
10184404	EPA 8260	Vinyl chloride	Accredited	STATE	
10185203	EPA 8270	1,2,4-Trichlorobenzene	Accredited	STATE	
10185203	EPA 8270	2,4,6-Trichlorophenol	Accredited	STATE	
10185203	EPA 8270	2,4-Dichlorophenol	Accredited	STATE	
10185203	EPA 8270	2,4-Dimethylphenol	Accredited	STATE	
10185203	EPA 8270	2,4-Dinitrophenol	Accredited	STATE	
10185203	EPA 8270	2,4-Dinitrotoluene (2,4-DNT)	Accredited	STATE	
10185203	EPA 8270	2,6-Dinitrotoluene (2,6-DNT)	Accredited	STATE	
10185203	EPA 8270	2-Chloronaphthalene	Accredited	STATE	
10185203	EPA 8270	2-Chlorophenol	Accredited	STATE	
10185203	EPA 8270	2-Methyl-4,6-dinitrophenol	Accredited	STATE	
10185203	EPA 8270	2-Nitrophenol	Accredited	STATE	
10185203	EPA 8270	4-Chloro-3-methylphenol	Accredited	STATE	
10185203	EPA 8270	4-Nitrophenol	Accredited	STATE	
10185203	EPA 8270	Acenaphthene	Accredited	STATE	
10185203	EPA 8270	Acenaphthylene	Accredited	STATE	
10185203	EPA 8270	Anthracene	Accredited	STATE	
10185203	EPA 8270	Benzo(a)anthracene	Accredited	STATE	
10185203	EPA 8270	Benzo(a)pyrene	Accredited	STATE	
10185203	EPA 8270	Benzo(g,h,i)perylene	Accredited	STATE	
10185203	EPA 8270	Benzo(k)fluoranthene	Accredited	STATE	
10185203	EPA 8270	Benzo[b]fluoranthene	Accredited	STATE	
10185203	EPA 8270	bis(2-Chloroethoxy)methane	Accredited	STATE	
10185203	EPA 8270	bis(2-Ethylhexyl) phthalate (DEHP)	Accredited	STATE	
10185203	EPA 8270	Butyl benzyl phthalate	Accredited	STATE	
10185203	EPA 8270	Chrysene	Accredited	STATE	
10185203	EPA 8270	Dibenz(a,h) anthracene	Accredited	STATE	
10185203	EPA 8270	Diethyl phthalate	Accredited	STATE	
10185203	EPA 8270	Dimethyl phthalate	Accredited	STATE	
10185203	EPA 8270	Di-n-butyl phthalate	Accredited	STATE	

Organization

03091 (608) 232-3300

En Chem, Inc. - Madison
525 Science Drive
Madison, WI 53711

RCRA Certification

Method Code	Method Ref	Analyte	Status	Type	AA
10185203	EPA 8270	Di-n-octyl phthalate	Accredited	STATE	
10185203	EPA 8270	Fluoranthene	Accredited	STATE	
10185203	EPA 8270	Fluorene	Accredited	STATE	
10185203	EPA 8270	Hexachlorobenzene	Accredited	STATE	
10185203	EPA 8270	Hexachlorobutadiene	Accredited	STATE	
10185203	EPA 8270	Hexachlorocyclopentadiene	Accredited	STATE	
10185203	EPA 8270	Hexachloroethane	Accredited	STATE	
10185203	EPA 8270	Indeno	Accredited	STATE	
10185203	EPA 8270	Isophorone	Accredited	STATE	
10185203	EPA 8270	Naphthalene	Accredited	STATE	
10185203	EPA 8270	Nitrobenzene	Accredited	STATE	
10185203	EPA 8270	Pentachlorophenol	Accredited	STATE	
10185203	EPA 8270	Phenol	Accredited	STATE	
10185203	EPA 8270	Pyrene	Accredited	STATE	
10187607	EPA 8310	Acenaphthene	Accredited	STATE	
10187607	EPA 8310	Acenaphthylene	Accredited	STATE	
10187607	EPA 8310	Anthracene	Accredited	STATE	
10187607	EPA 8310	Benzo(a)anthracene	Accredited	STATE	
10187607	EPA 8310	Benzo(a)pyrene	Accredited	STATE	
10187607	EPA 8310	Benzo(g,h,i)perylene	Accredited	STATE	
10187607	EPA 8310	Benzo(k)fluoranthene	Accredited	STATE	
10187607	EPA 8310	Benzo[b]fluoranthene	Accredited	STATE	
10187607	EPA 8310	Chrysene	Accredited	STATE	
10187607	EPA 8310	Dibenz(a,h) anthracene	Accredited	STATE	
10187607	EPA 8310	Fluoranthene	Accredited	STATE	
10187607	EPA 8310	Fluorene	Accredited	STATE	
10187607	EPA 8310	Indeno	Accredited	STATE	
10187607	EPA 8310	Naphthalene	Accredited	STATE	
10187607	EPA 8310	Phenanthrene	Accredited	STATE	
10187607	EPA 8310	Pyrene	Accredited	STATE	
10192606	EPA 9010	Amenable cyanide	Accredited	STATE	
10192606	EPA 9010	Total cyanide	Accredited	STATE	
10193201	EPA 9012	Amenable cyanide	Accredited	STATE	
10193201	EPA 9012	Total cyanide	Accredited	STATE	

CWA Certification

Method Code	Method Ref	Analyte	Status	Type	AA
10006209	EPA 120.1	Conductivity	Accredited	STATE	
10008205	EPA 150.1	pH	Accredited	STATE	
10009208	EPA 160.1	Residue-filterable (TDS)	Accredited	STATE	
10009402	EPA 160.2	Residue-nonfilterable (TSS)	Accredited	STATE	
10009800	EPA 160.3	Residue-total	Accredited	STATE	
10013408	EPA 200.7	Titanium	Accredited	STATE	

Organization

03091 (608) 232-3300
En Chem, Inc. - Madison
525 Science Drive
Madison, WI 53711

CWA Certification

Method Code	Method Ref	Analyte	Status	Type	AA
10013408	EPA 200.7	Total hardness as CaCO3	Accredited	STATE	
10013602	EPA 200.7	Aluminum	Accredited	STATE	
10013602	EPA 200.7	Antimony	Accredited	STATE	
10013602	EPA 200.7	Arsenic	Accredited	STATE	
10013602	EPA 200.7	Barium	Accredited	STATE	
10013602	EPA 200.7	Beryllium	Accredited	STATE	
10013602	EPA 200.7	Cadmium	Accredited	STATE	
10013602	EPA 200.7	Calcium	Accredited	STATE	
10013602	EPA 200.7	Chromium	Accredited	STATE	
10013602	EPA 200.7	Cobalt	Accredited	STATE	
10013602	EPA 200.7	Copper	Accredited	STATE	
10013602	EPA 200.7	Iron	Accredited	STATE	
10013602	EPA 200.7	Lead	Accredited	STATE	
10013602	EPA 200.7	Magnesium	Accredited	STATE	
10013602	EPA 200.7	Manganese	Accredited	STATE	
10013602	EPA 200.7	Molybdenum	Accredited	STATE	
10013602	EPA 200.7	Nickel	Accredited	STATE	
10013602	EPA 200.7	Potassium	Accredited	STATE	
10013602	EPA 200.7	Selenium	Accredited	STATE	
10013602	EPA 200.7	Silver	Accredited	STATE	
10013602	EPA 200.7	Sodium	Accredited	STATE	
10013602	EPA 200.7	Thallium	Accredited	STATE	
10013602	EPA 200.7	Tin	Accredited	STATE	
10013602	EPA 200.7	Vanadium	Accredited	STATE	
10013602	EPA 200.7	Zinc	Accredited	STATE	
10014401	EPA 200.8	Aluminum	Accredited	STATE	
10014401	EPA 200.8	Antimony	Accredited	STATE	
10014401	EPA 200.8	Arsenic	Accredited	STATE	
10014401	EPA 200.8	Barium	Accredited	STATE	
10014401	EPA 200.8	Beryllium	Accredited	STATE	
10014401	EPA 200.8	Cadmium	Accredited	STATE	
10014401	EPA 200.8	Chromium	Accredited	STATE	
10014401	EPA 200.8	Cobalt	Accredited	STATE	
10014401	EPA 200.8	Copper	Accredited	STATE	
10014401	EPA 200.8	Lead	Accredited	STATE	
10014401	EPA 200.8	Magnesium	Accredited	STATE	
10014401	EPA 200.8	Mercury	Accredited	STATE	
10014401	EPA 200.8	Selenium	Accredited	STATE	
10014401	EPA 200.8	Silver	Accredited	STATE	
10014401	EPA 200.8	Thallium	Accredited	STATE	
10014401	EPA 200.8	Vanadium	Accredited	STATE	
10014401	EPA 200.8	Zinc	Accredited	STATE	

Organization

03091 (608) 232-3300
En Chem, Inc. - Madison
525 Science Drive
Madison, WI 53711

CWA Certification

Method Code	Method Ref	Analyte	Status	Type	AA
10015006	EPA 200.9	Antimony	Accredited	STATE	
10015006	EPA 200.9	Arsenic	Accredited	STATE	
10015006	EPA 200.9	Cadmium	Accredited	STATE	
10015006	EPA 200.9	Chromium	Accredited	STATE	
10015006	EPA 200.9	Copper	Accredited	STATE	
10015006	EPA 200.9	Lead	Accredited	STATE	
10015006	EPA 200.9	Silver	Accredited	STATE	
10015006	EPA 200.9	Thallium	Accredited	STATE	
10017400	EPA 204.2	Antimony	Accredited	STATE	
10018209	EPA 206.2	Arsenic	Accredited	STATE	
10023800	EPA 213.2	Cadmium	Accredited	STATE	
10026207	EPA 218.2	Chromium	Accredited	STATE	
10030203	EPA 220.2	Copper	Accredited	STATE	
10034001	EPA 239.2	Lead	Accredited	STATE	
10036609	EPA 245.1	Mercury	Accredited	STATE	
10045008	EPA 270.2	Selenium	Accredited	STATE	
10046603	EPA 272.2	Silver	Accredited	STATE	
10048803	EPA 279.2	Thallium	Accredited	STATE	
10053006	EPA 300.0	Bromide	Accredited	STATE	
10053006	EPA 300.0	Chloride	Accredited	STATE	
10053006	EPA 300.0	Fluoride	Accredited	STATE	
10053006	EPA 300.0	Nitrate	Accredited	STATE	
10053006	EPA 300.0	Sulfate	Accredited	STATE	
10054009	EPA 305.1	Acidity, as CaCO3	Accredited	STATE	
10055002	EPA 310.2	Alkalinity as CaCO3	Accredited	STATE	
10056607	EPA 325.1	Chloride	Accredited	STATE	
10061208	EPA 335.4	Total cyanide	Accredited	STATE	
10063408	EPA 350.1	Ammonia as N	Accredited	STATE	
10067206	EPA 353.2	Total nitrate-nitrite	Accredited	STATE	
10070005	EPA 365.1	Phosphorus, total	Accredited	STATE	
10072205	EPA 375.1	Sulfate	Accredited	STATE	
10074201	EPA 376.1	Sulfide	Accredited	STATE	
10077200	EPA 410.4	Chemical oxygen demand	Accredited	STATE	
10077608	EPA 413.1	Oil & Grease	Accredited	STATE	
10078407	EPA 415.1	Total organic carbon	Accredited	STATE	
10079604	EPA 420.2	Total phenolics	Accredited	STATE	
10103603	EPA 608	4,4'-DDD	Accredited	STATE	
10103603	EPA 608	4,4'-DDE	Accredited	STATE	
10103603	EPA 608	4,4'-DDT	Accredited	STATE	
10103603	EPA 608	Aldrin	Accredited	STATE	
10103603	EPA 608	alpha-BHC (alpha-Hexachlorocyclohexane)	Accredited	STATE	
10103603	EPA 608	Aroclor-1016 (PCB-1016)	Accredited	STATE	

Organization

03091 (608) 232-3300
En Chem, Inc. - Madison
525 Science Drive
Madison, WI 53711

CWA Certification

Method Code	Method Ref	Analyte	Status	Type	AA
10103603	EPA 608	Aroclor-1221 (PCB-1221)	Accredited	STATE	
10103603	EPA 608	Aroclor-1232 (PCB-1232)	Accredited	STATE	
10103603	EPA 608	Aroclor-1242 (PCB-1242)	Accredited	STATE	
10103603	EPA 608	Aroclor-1248 (PCB-1248)	Accredited	STATE	
10103603	EPA 608	Aroclor-1254 (PCB-1254)	Accredited	STATE	
10103603	EPA 608	Aroclor-1260 (PCB-1260)	Accredited	STATE	
10103603	EPA 608	beta-BHC (beta-Hexachlorocyclohexane)	Accredited	STATE	
10103603	EPA 608	delta-BHC	Accredited	STATE	
10103603	EPA 608	Dieldrin	Accredited	STATE	
10103603	EPA 608	Endosulfan I	Accredited	STATE	
10103603	EPA 608	Endosulfan II	Accredited	STATE	
10103603	EPA 608	Endosulfan sulfate	Accredited	STATE	
10103603	EPA 608	Endrin	Accredited	STATE	
10103603	EPA 608	Endrin aldehyde	Accredited	STATE	
10103603	EPA 608	gamma-BHC (Lindane, gamma-HexachlorocyclohexanE)	Accredited	STATE	
10103603	EPA 608	Heptachlor	Accredited	STATE	
10103603	EPA 608	Heptachlor epoxide	Accredited	STATE	
10103603	EPA 608	Toxaphene (Chlorinated camphene)	Accredited	STATE	
10104402	EPA 610	Acenaphthene	Accredited	STATE	
10104402	EPA 610	Acenaphthylene	Accredited	STATE	
10104402	EPA 610	Anthracene	Accredited	STATE	
10104402	EPA 610	Benzo(a)anthracene	Accredited	STATE	
10104402	EPA 610	Benzo(a)pyrene	Accredited	STATE	
10104402	EPA 610	Benzo(g,h,i)perylene	Accredited	STATE	
10104402	EPA 610	Benzo(k)fluoranthene	Accredited	STATE	
10104402	EPA 610	Benzo[b]fluoranthene	Accredited	STATE	
10104402	EPA 610	Chrysene	Accredited	STATE	
10104402	EPA 610	Dibenz(a,h) anthracene	Accredited	STATE	
10104402	EPA 610	Fluoranthene	Accredited	STATE	
10104402	EPA 610	Fluorene	Accredited	STATE	
10104402	EPA 610	Indeno	Accredited	STATE	
10104402	EPA 610	Naphthalene	Accredited	STATE	
10104402	EPA 610	Phenanthrene	Accredited	STATE	
10104402	EPA 610	Pyrene	Accredited	STATE	
10107207	EPA 624	1,1,1-Trichloroethane	Accredited	STATE	
10107207	EPA 624	1,1,2,2-Tetrachloroethane	Accredited	STATE	
10107207	EPA 624	1,1,2-Trichloroethane	Accredited	STATE	
10107207	EPA 624	1,1-Dichloroethane	Accredited	STATE	
10107207	EPA 624	1,1-Dichloroethylene	Accredited	STATE	
10107207	EPA 624	1,2-Dichlorobenzene	Accredited	STATE	
10107207	EPA 624	1,2-Dichloroethane	Accredited	STATE	

Organization

03091 **(608) 232-3300**

En Chem, Inc. - Madison
525 Science Drive
Madison, WI 53711

CWA Certification

Method Code	Method Ref	Analyte	Status	Type	AA
10107207	EPA 624	1,2-Dichloropropane	Accredited	STATE	
10107207	EPA 624	1,3-Dichlorobenzene	Accredited	STATE	
10107207	EPA 624	1,4-Dichlorobenzene	Accredited	STATE	
10107207	EPA 624	2-Chloroethyl vinyl ether	Accredited	STATE	
10107207	EPA 624	Acrolein (Propenal)	Accredited	STATE	
10107207	EPA 624	Acrylonitrile	Accredited	STATE	
10107207	EPA 624	Benzene	Accredited	STATE	
10107207	EPA 624	Bromodichloromethane	Accredited	STATE	
10107207	EPA 624	Bromoform	Accredited	STATE	
10107207	EPA 624	Carbon tetrachloride	Accredited	STATE	
10107207	EPA 624	Chlorobenzene	Accredited	STATE	
10107207	EPA 624	Chloroethane	Accredited	STATE	
10107207	EPA 624	Chloroform	Accredited	STATE	
10107207	EPA 624	cis-1,3-Dichloropropene	Accredited	STATE	
10107207	EPA 624	Dibromochloromethane	Accredited	STATE	
10107207	EPA 624	Dichlorodifluoromethane	Accredited	STATE	
10107207	EPA 624	Ethylbenzene	Accredited	STATE	
10107207	EPA 624	Methyl bromide (Bromomethane)	Accredited	STATE	
10107207	EPA 624	Methyl chloride (Chloromethane)	Accredited	STATE	
10107207	EPA 624	Methylene chloride	Accredited	STATE	
10107207	EPA 624	Tetrachloroethylene (Perchloroethylene)	Accredited	STATE	
10107207	EPA 624	Toluene	Accredited	STATE	
10107207	EPA 624	trans-1,3-Dichloropropylene	Accredited	STATE	
10107207	EPA 624	Trichloroethene (Trichloroethylene)	Accredited	STATE	
10107207	EPA 624	Trichlorofluoromethane	Accredited	STATE	
10107207	EPA 624	Vinyl chloride	Accredited	STATE	
10107401	EPA 625	1,2,4-Trichlorobenzene	Accredited	STATE	
10107401	EPA 625	1,3-Dichlorobenzene	Accredited	STATE	
10107401	EPA 625	2,4,6-Trichlorophenol	Accredited	STATE	
10107401	EPA 625	2,4-Dichlorophenol	Accredited	STATE	
10107401	EPA 625	2,4-Dimethylphenol	Accredited	STATE	
10107401	EPA 625	2,4-Dinitrophenol	Accredited	STATE	
10107401	EPA 625	2,4-Dinitrotoluene (2,4-DNT)	Accredited	STATE	
10107401	EPA 625	2,6-Dinitrotoluene (2,6-DNT)	Accredited	STATE	
10107401	EPA 625	2-Chloronaphthalene	Accredited	STATE	
10107401	EPA 625	2-Chlorophenol	Accredited	STATE	
10107401	EPA 625	2-Methyl-4,6-dinitrophenol	Accredited	STATE	
10107401	EPA 625	2-Nitrophenol	Accredited	STATE	
10107401	EPA 625	3,3'-Dichlorobenzidine	Accredited	STATE	
10107401	EPA 625	4-Bromophenyl phenyl ether	Accredited	STATE	
10107401	EPA 625	4-Chloro-3-methylphenol	Accredited	STATE	
10107401	EPA 625	4-Chlorophenyl phenylether	Accredited	STATE	

Organization

03091 (608) 232-3300
En Chem, Inc. - Madison
525 Science Drive
Madison, WI 53711

CWA Certification

Method Code	Method Ref	Analyte	Status	Type	AA
10107401	EPA 625	4-Nitrophenol	Accredited	STATE	
10107401	EPA 625	Acenaphthene	Accredited	STATE	
10107401	EPA 625	Acenaphthylene	Accredited	STATE	
10107401	EPA 625	Anthracene	Accredited	STATE	
10107401	EPA 625	Benzidine	Accredited	STATE	
10107401	EPA 625	Benzo(a)anthracene	Accredited	STATE	
10107401	EPA 625	Benzo(a)pyrene	Accredited	STATE	
10107401	EPA 625	Benzo(g,h,i)perylene	Accredited	STATE	
10107401	EPA 625	Benzo(k)fluoranthene	Accredited	STATE	
10107401	EPA 625	Benzo[b]fluoranthene	Accredited	STATE	
10107401	EPA 625	bis(2-Chloroethoxy)methane	Accredited	STATE	
10107401	EPA 625	bis(2-Chloroethyl) ether	Accredited	STATE	
10107401	EPA 625	bis(2-Ethylhexyl) phthalate (DEHP)	Accredited	STATE	
10107401	EPA 625	Butyl benzyl phthalate	Accredited	STATE	
10107401	EPA 625	Chrysene	Accredited	STATE	
10107401	EPA 625	Dibenz(a,h) anthracene	Accredited	STATE	
10107401	EPA 625	Diethyl phthalate	Accredited	STATE	
10107401	EPA 625	Dimethyl phthalate	Accredited	STATE	
10107401	EPA 625	Di-n-butyl phthalate	Accredited	STATE	
10107401	EPA 625	Di-n-octyl phthalate	Accredited	STATE	
10107401	EPA 625	Fluoranthene	Accredited	STATE	
10107401	EPA 625	Fluorene	Accredited	STATE	
10107401	EPA 625	Hexachlorobenzene	Accredited	STATE	
10107401	EPA 625	Hexachlorobutadiene	Accredited	STATE	
10107401	EPA 625	Hexachlorocyclopentadiene	Accredited	STATE	
10107401	EPA 625	Hexachloroethane	Accredited	STATE	
10107401	EPA 625	Indeno	Accredited	STATE	
10107401	EPA 625	Isophorone	Accredited	STATE	
10107401	EPA 625	Naphthalene	Accredited	STATE	
10107401	EPA 625	Nitrobenzene	Accredited	STATE	
10107401	EPA 625	n-Nitrosodimethylamine	Accredited	STATE	
10107401	EPA 625	n-Nitrosodi-n-propylamine	Accredited	STATE	
10107401	EPA 625	n-Nitrosodiphenylamine	Accredited	STATE	
10107401	EPA 625	Pentachlorophenol	Accredited	STATE	
10107401	EPA 625	Phenanthrene	Accredited	STATE	
10107401	EPA 625	Phenol	Accredited	STATE	
10107401	EPA 625	Pyrene	Accredited	STATE	
10122802	EPA 1631	Mercury	Accredited	STATE	
10127409	EPA 1664	Oil & Grease	Accredited	STATE	
20003003	SM 2320 B	Alkalinity as CaCO3	Accredited	STATE	
20012800	SM 4500 F-C	Fluoride	Accredited	STATE	
20031203	SM 6630 C	Methoxychlor	Accredited	STATE	

Organization

03091 **(608) 232-3300**

En Chem, Inc. - Madison
525 Science Drive
Madison, WI 53711

CWA Certification

Method Code	Method Ref	Analyte	Status	Type	AA
20031407	SM 6640 B	2,4,5-T	Accredited	STATE	
20031407	SM 6640 B	2,4-D	Accredited	STATE	
20031407	SM 6640 B	Silvex (2,4,5-TP)	Accredited	STATE	

STATE OF LOUISIANA
DEPARTMENT OF ENVIRONMENTAL QUALITY
Awards the Certificate of Approval

CERTIFICATE NO.: 03091

Date: July 1, 2002

EN CHEM, INC. - MADISON
525 Science Drive
Madison, WI 53711

Agency Interest Number: 85085

According to the Louisiana Administrative Code, Title 33, Part I, Subpart 3, Laboratory Accreditation, the State of Louisiana formally recognizes that this laboratory is technically competent to perform the environmental analyses listed on the scope of the accreditation detailed below.

The laboratory agrees to perform all analyses listed on this scope of accreditation according to the Part I, Subpart 3 requirements and acknowledges that continued accreditation is dependent on successful ongoing compliance with the applicable requirements of Part I, Subpart 3. Please contact the Department of Environmental Quality, Louisiana Environmental Laboratory Accreditation Program (LELAP) to verify the laboratory's scope of accreditation and accreditation status. Accreditation by the State of Louisiana is not an endorsement or a guarantee of validity of the data generated by the laboratory.

PARAMETER	ANALYSIS METHOD	ACCREDITATION STATUS	ACCREDITATION TYPE
CLEAN WATER METHODS			
Endrin Ketone	EPA 608	CERTIFIED	STATE
1,2-Dichloroethylene, total cis & trans	EPA 624	CERTIFIED	STATE
Xylene, meta & para	EPA 624	CERTIFIED	STATE
Xylene, ortho	EPA 624	CERTIFIED	STATE
2,2-oxybis(1-Chloropropane)	EPA 625	CERTIFIED	STATE
2,4,5-Trichlorophenol	EPA 625	CERTIFIED	STATE

PARAMETER	ANALYSIS METHOD	ACCREDITATION STATUS	ACCREDITATION TYPE
SOLID AND HAZARDOUS WASTE METHODS			
Xylene, meta & para	EPA 8260B	CERTIFIED	STATE
Xylene, ortho	EPA 8260B	CERTIFIED	STATE
2,2-oxybis(1-Chloropropane)	EPA 8270C	CERTIFIED	STATE

PARAMETER	ANALYSIS METHOD	ACCREDITATION STATUS	ACCREDITATION TYPE
PLANT AND ANIMAL TISSUE METHODS			
Aluminum	EPA 6010B	CERTIFIED	STATE
Antimony	EPA 6010B	CERTIFIED	STATE
Arsenic	EPA 6010B	CERTIFIED	STATE
Barium	EPA 6010B	CERTIFIED	STATE
Beryllium	EPA 6010B	CERTIFIED	STATE
Cadmium	EPA 6010B	CERTIFIED	STATE
Calcium	EPA 6010B	CERTIFIED	STATE
Chromium	EPA 6010B	CERTIFIED	STATE
Cobalt	EPA 6010B	CERTIFIED	STATE
Copper	EPA 6010B	CERTIFIED	STATE
Iron	EPA 6010B	CERTIFIED	STATE
Lead	EPA 6010B	CERTIFIED	STATE
Lithium	EPA 6010B	CERTIFIED	STATE
Magnesium	EPA 6010B	CERTIFIED	STATE
Manganese	EPA 6010B	CERTIFIED	STATE
Molybdenum	EPA 6010B	CERTIFIED	STATE
Nickel	EPA 6010B	CERTIFIED	STATE
Potassium	EPA 6010B	CERTIFIED	STATE
Selenium	EPA 6010B	CERTIFIED	STATE
Silver	EPA 6010B	CERTIFIED	STATE
Sodium	EPA 6010B	CERTIFIED	STATE
Thallium	EPA 6010B	CERTIFIED	STATE
Tin	EPA 6010B	CERTIFIED	STATE

PARAMETER	ANALYSIS METHOD	ACCREDITATION STATUS	ACCREDITATION TYPE
PLANT AND ANIMAL TISSUE METHODS			
Vanadium	EPA 6010B	CERTIFIED	STATE
Zinc	EPA 6010B	CERTIFIED	STATE
Aluminum	EPA 6020	CERTIFIED	STATE
Antimony	EPA 6020	CERTIFIED	STATE
Arsenic	EPA 6020	CERTIFIED	STATE
Barium	EPA 6020	CERTIFIED	STATE
Beryllium	EPA 6020	CERTIFIED	STATE
Cadmium	EPA 6020	CERTIFIED	STATE
Calcium	EPA 6020	CERTIFIED	STATE
Chromium	EPA 6020	CERTIFIED	STATE
Cobalt	EPA 6020	CERTIFIED	STATE
Copper	EPA 6020	CERTIFIED	STATE
Iron	EPA 6020	CERTIFIED	STATE
Lead	EPA 6020	CERTIFIED	STATE
Magnesium	EPA 6020	CERTIFIED	STATE
Manganese	EPA 6020	CERTIFIED	STATE
Molybdenum	EPA 6020	CERTIFIED	STATE
Nickel	EPA 6020	CERTIFIED	STATE
Potassium	EPA 6020	CERTIFIED	STATE
Selenium	EPA 6020	CERTIFIED	STATE
Silver	EPA 6020	CERTIFIED	STATE
Sodium	EPA 6020	CERTIFIED	STATE
Strontium	EPA 6020	CERTIFIED	STATE

PARAMETER	ANALYSIS METHOD	ACCREDITATION STATUS	ACCREDITATION TYPE
PLANT AND ANIMAL TISSUE METHODS			
Thallium	EPA 6020	CERTIFIED	STATE
Tin	EPA 6020	CERTIFIED	STATE
Vanadium	EPA 6020	CERTIFIED	STATE
Zinc	EPA 6020	CERTIFIED	STATE
Antimony	EPA 7041	CERTIFIED	STATE
Cadmium	EPA 7131A	CERTIFIED	STATE
Chromium	EPA 7191	CERTIFIED	STATE
Copper	EPA 7211	CERTIFIED	STATE
Lead	EPA 7421	CERTIFIED	STATE
Mercury	EPA 7471A	CERTIFIED	STATE
Selenium	EPA 7740	CERTIFIED	STATE
Silver	EPA 7761	CERTIFIED	STATE
Thallium	EPA 7841	CERTIFIED	STATE
4,4'-DDD	EPA 8081A	CERTIFIED	STATE
4,4'-DDE	EPA 8081A	CERTIFIED	STATE
4,4'-DDT	EPA 8081A	CERTIFIED	STATE
Aldrin	EPA 8081A	CERTIFIED	STATE
alpha-BHC	EPA 8081A	CERTIFIED	STATE
alpha-Chlordane	EPA 8081A	CERTIFIED	STATE
beta-BHC	EPA 8081A	CERTIFIED	STATE
delta-BHC	EPA 8081A	CERTIFIED	STATE
Dieldrin	EPA 8081A	CERTIFIED	STATE
Endosulfan I	EPA 8081A	CERTIFIED	STATE

PARAMETER	ANALYSIS METHOD	ACCREDITATION STATUS	ACCREDITATION TYPE
PLANT AND ANIMAL TISSUE METHODS			
Endosulfan II	EPA 8081A	CERTIFIED	STATE
Endosulfan Sulfate	EPA 8081A	CERTIFIED	STATE
Endrin	EPA 8081A	CERTIFIED	STATE
Endrin Aldehyde	EPA 8081A	CERTIFIED	STATE
Endrin Ketone	EPA 8081A	CERTIFIED	STATE
gamma-BHC (Lindane)	EPA 8081A	CERTIFIED	STATE
gamma-Chlordane	EPA 8081A	CERTIFIED	STATE
Heptachlor	EPA 8081A	CERTIFIED	STATE
Heptachlor Epoxide	EPA 8081A	CERTIFIED	STATE
Methoxychlor	EPA 8081A	CERTIFIED	STATE
Arachlor-1016	EPA 8082	CERTIFIED	STATE
Arachlor-1221	EPA 8082	CERTIFIED	STATE
Arachlor-1232	EPA 8082	CERTIFIED	STATE
Arachlor-1242	EPA 8082	CERTIFIED	STATE
Arachlor-1248	EPA 8082	CERTIFIED	STATE
Arachlor-1254	EPA 8082	CERTIFIED	STATE
Arachlor-1260	EPA 8082	CERTIFIED	STATE
1,2,4-Trichlorobenzene	EPA 8270C	CERTIFIED	STATE
1,2-Dichlorobenzene	EPA 8270C	CERTIFIED	STATE
1,2-Diphenylhydrazine	EPA 8270C	CERTIFIED	STATE
1,3-Dichlorobenzene	EPA 8270C	CERTIFIED	STATE
1,4-Dichlorobenzene	EPA 8270C	CERTIFIED	STATE
1-Methylnaphthalene	EPA 8270C	CERTIFIED	STATE

PARAMETER	ANALYSIS METHOD	ACCREDITATION STATUS	ACCREDITATION TYPE
PLANT AND ANIMAL TISSUE METHODS			
2,2-oxybis(1-Chloropropane)	EPA 8270C	CERTIFIED	STATE
2,4,5-Trichlorophenol	EPA 8270C	CERTIFIED	STATE
2,4,6-Trichlorophenol	EPA 8270C	CERTIFIED	STATE
2,4-Dichlorophenol	EPA 8270C	CERTIFIED	STATE
2,4-Dimethylphenol	EPA 8270C	CERTIFIED	STATE
2,4-Dinitrophenol	EPA 8270C	CERTIFIED	STATE
2,4-Dinitrotoluene	EPA 8270C	CERTIFIED	STATE
2,6-Dinitrotoluene	EPA 8270C	CERTIFIED	STATE
2-Chloronaphthalene	EPA 8270C	CERTIFIED	STATE
2-Chlorophenol	EPA 8270C	CERTIFIED	STATE
2-Methyl-4,6-Dinitrophenol	EPA 8270C	CERTIFIED	STATE
2-Methylnaphthalene	EPA 8270C	CERTIFIED	STATE
2-Methylphenol	EPA 8270C	CERTIFIED	STATE
2-Nitroaniline	EPA 8270C	CERTIFIED	STATE
2-Nitrophenol	EPA 8270C	CERTIFIED	STATE
3,3'-Dichlorobenzidine	EPA 8270C	CERTIFIED	STATE
3-Nitroaniline	EPA 8270C	CERTIFIED	STATE
4-Bromophenyl Phenyl Ether	EPA 8270C	CERTIFIED	STATE
4-Chloro-3-Methylphenol	EPA 8270C	CERTIFIED	STATE
4-Chloroaniline	EPA 8270C	CERTIFIED	STATE
4-Chlorophenyl Phenyl Ether	EPA 8270C	CERTIFIED	STATE
4-Methylphenol	EPA 8270C	CERTIFIED	STATE
4-Nitroaniline	EPA 8270C	CERTIFIED	STATE

PARAMETER	ANALYSIS METHOD	ACCREDITATION STATUS	ACCREDITATION TYPE
PLANT AND ANIMAL TISSUE METHODS			
4-Nitrophenol	EPA 8270C	CERTIFIED	STATE
Acenaphthene	EPA 8270C	CERTIFIED	STATE
Acenaphthylene	EPA 8270C	CERTIFIED	STATE
Anthracene	EPA 8270C	CERTIFIED	STATE
Benzo(a)anthracene	EPA 8270C	CERTIFIED	STATE
Benzo(a)pyrene	EPA 8270C	CERTIFIED	STATE
Benzo(b)fluoranthene	EPA 8270C	CERTIFIED	STATE
Benzo(g,h,i)perylene	EPA 8270C	CERTIFIED	STATE
Benzo(k)fluoranthene	EPA 8270C	CERTIFIED	STATE
Benzoic Acid	EPA 8270C	CERTIFIED	STATE
Benzyl Alcohol	EPA 8270C	CERTIFIED	STATE
Benzyl Butyl Phthalate	EPA 8270C	CERTIFIED	STATE
bis(2-Chloroethoxy)methane	EPA 8270C	CERTIFIED	STATE
bis(2-Chloroethyl) Ether	EPA 8270C	CERTIFIED	STATE
bis(2-Ethylhexyl) Phthalate	EPA 8270C	CERTIFIED	STATE
Carbazole	EPA 8270C	CERTIFIED	STATE
Chrysene	EPA 8270C	CERTIFIED	STATE
Dibenzo(a,h)anthracene	EPA 8270C	CERTIFIED	STATE
Dibenzofuran	EPA 8270C	CERTIFIED	STATE
Diethyl Phthalate	EPA 8270C	CERTIFIED	STATE
Dimethyl Phthalate	EPA 8270C	CERTIFIED	STATE
Di-n-butyl Phthalate	EPA 8270C	CERTIFIED	STATE
Di-n-octyl Phthalate	EPA 8270C	CERTIFIED	STATE

PARAMETER	ANALYSIS METHOD	ACCREDITATION STATUS	ACCREDITATION TYPE
PLANT AND ANIMAL TISSUE METHODS			
Fluoranthene	EPA 8270C	CERTIFIED	STATE
Fluorene	EPA 8270C	CERTIFIED	STATE
Hexachlorobenzene	EPA 8270C	CERTIFIED	STATE
Hexachlorobutadiene	EPA 8270C	CERTIFIED	STATE
Hexachlorocyclopentadiene	EPA 8270C	CERTIFIED	STATE
Hexachloroethane	EPA 8270C	CERTIFIED	STATE
Indeno(1,2,3-c,d)pyrene	EPA 8270C	CERTIFIED	STATE
Isophorone	EPA 8270C	CERTIFIED	STATE
Naphthalene	EPA 8270C	CERTIFIED	STATE
Nitrobenzene	EPA 8270C	CERTIFIED	STATE
N-Nitrosodimethylamine	EPA 8270C	CERTIFIED	STATE
N-Nitrosodi-n-propylamine	EPA 8270C	CERTIFIED	STATE
N-Nitrosodiphenylamine	EPA 8270C	CERTIFIED	STATE
Pentachlorophenol	EPA 8270C	CERTIFIED	STATE
Phenanthrene	EPA 8270C	CERTIFIED	STATE
Phenol	EPA 8270C	CERTIFIED	STATE
Pyrene	EPA 8270C	CERTIFIED	STATE
Pyridine	EPA 8270C	CERTIFIED	STATE
Acenaphthene	EPA 8270C - SIM	CERTIFIED	STATE
Acenaphthylene	EPA 8270C - SIM	CERTIFIED	STATE
Anthracene	EPA 8270C - SIM	CERTIFIED	STATE
Benzo(a)anthracene	EPA 8270C - SIM	CERTIFIED	STATE
Benzo(a)pyrene	EPA 8270C - SIM	CERTIFIED	STATE

PARAMETER	ANALYSIS METHOD	ACCREDITATION STATUS	ACCREDITATION TYPE
PLANT AND ANIMAL TISSUE METHODS			
Benzo(b)fluoranthene	EPA 8270C - SIM	CERTIFIED	STATE
Benzo(g,h,i)perylene	EPA 8270C - SIM	CERTIFIED	STATE
Benzo(k)fluoranthene	EPA 8270C - SIM	CERTIFIED	STATE
Chrysene	EPA 8270C - SIM	CERTIFIED	STATE
Dibenzo(a,h)anthracene	EPA 8270C - SIM	CERTIFIED	STATE
Fluoranthene	EPA 8270C - SIM	CERTIFIED	STATE
Fluorene	EPA 8270C - SIM	CERTIFIED	STATE
Indeno(1,2,3-c,d)pyrene	EPA 8270C - SIM	CERTIFIED	STATE
Naphthalene	EPA 8270C - SIM	CERTIFIED	STATE
Phenanthrene	EPA 8270C - SIM	CERTIFIED	STATE
Pyrene	EPA 8270C - SIM	CERTIFIED	STATE

NORTH DAKOTA STATE DEPARTMENT OF HEALTH
RECOGNITION OF CERTIFICATION OR ACCREDITATION

This is to certify that the North Dakota State Department of Health recognizes the certification or accreditation of

En Chem, Inc. - 525 Science Drive - Madfison, Wisconsin

by

The State of North Carolina Department of the Environment and Natural Resources

for

All wastewater/groundwater laboratory certification parameters for which they retain certification from the State of North Carolina Department of the Environment and Natural Resources Division of Water Quality Laboratory Certification Program

Certificate Number: R-159

Date of issue: January 22, 2001 Expiration Date: December 31, 2002 Covers: 01/01/2001 - 12/31/2002

This certificate remains the property of the North Dakota State Department of Health and may be recalled for cause, at any time, by the department. Recognition of a laboratory's certification by the North Dakota Department of Health is not an endorsement or a guarantee of the validity of the results reported by the laboratory.

Myra Kosse
Director, Division of Chemistry

Ernie Erickson
Certification Officer

NORTH DAKOTA DEPARTMENT OF HEALTH
CHEMISTRY DIVISION
2635 East Main Avenue, P.O. Box 937
Bismarck, North Dakota 58502-0937
(701)328-6140 FAX (701)328-6145

January 22, 2001

Greg Graf
En Chem, Inc.
525 Science Drive
Madison, WI 53711

Dear Mr. Graf:

Your laboratory's North Carolina wastewater/groundwater certification is being recognized by the North Dakota Environmental Laboratory Certification Program (NDELCP) until December 31, 2002. As I explained in our telephone conversation, the fee payment you sent covers only 24 months and thus only from January of 2001 through December of 2002. The main requirements for maintaining this recognition of your laboratory's North Carolina certification are (1) that I be notified, in writing, within thirty days of any changes in the status of your laboratory's North Carolina certification; and (2) that I be sent copies of the reports of your laboratory's participation in water pollution proficiency test studies. If your laboratory desires to renew certification with North Dakota when this recognition of certification expires, an authorized representative will need to contact me to initiate the renewal process.

Anyone having questions about this recognition of your laboratory's North Carolina certification by the NDELCP should call me at 701-328-6172.

Sincerely,

Errol Erickson

Errol Erickson
Laboratory Certification Officer

Copies to: Colleen Matejcek, NDSDH Water Quality Division
L. David Glatt, NDSDH Waste Management Division

STATE OF NORTH CAROLINA DEPARTMENT OF THE
ENVIRONMENT AND NATURAL RESOURCES

DIVISION OF WATER QUALITY
LABORATORY CERTIFICATION PROGRAM

In accordance with the provisions of N.C.G.S. 143-215.3 (a) (1), 143-215.3 (a)(10) and NCAC 2H.0800:

EN CHEM, INC.

Is hereby certified to perform environmental analysis as listed on Attachment I and report monitoring data to DWQ for compliance with NPDES effluent, surface water, groundwater, and pretreatment regulations.

By reference 15A NCAC 2H .0800 is made a part of this certificate.

This certificate does not guarantee validity of data generated, but indicates the methodology, equipment, quality control procedures, records, and proficiency of the laboratory have been examined and found to be acceptable.

This certificate shall be valid until December 31, 2003

Certificate No. *503*

Steve W. Tedder

Attachment I

North Carolina Wastewater/Groundwater Laboratory Certification

Certified Parameters Listing

Name:	EN CHEM, Inc.	Certificate Number:	503
Address:	1241 Bellvue St. #9 Green Bay, WI 54302-2156	Effective Date:	01/01/2003
		Expiration Date:	12/31/2003
		Date of Last Amendment:	

The above named laboratory, having duly met the requirements of 15A NCAC 2H.0800, is hereby certified for the measurement of the parameters listed below.

CERTIFIED PARAMETERS

INORGANICS

ALKALINITY
- EPA Method 310.2

COD
- EPA Method 410.4

CHLORIDE
- EPA Method 325.1
- EPA Method 300

CONDUCTIVITY
- EPA Method 120.1

CYANIDE TOTAL
- EPA Method 335.3

FLUORIDE
- EPA Method 300

HARDNESS TOTAL
- EPA Method 200.7

AMMONIA NITROGEN
- EPA Method 350.1

NO2 + NO3 NITROGEN
- EPA Method 353.2

NITRATE NITROGEN
- EPA Method 300

NITRITE NITROGEN
- EPA Method 300

TOTAL PHOSPHORUS
- EPA Method 365.1

OIL & GREASE
- EPA Method 1664 Rev A
- EPA Method 413.1
- SW846 Method 9071A

pH
- EPA Method 150.1

INORGANIC PHENOLS
- EPA Method 420.2

RESIDUE TOTAL
- EPA Method 160.3

RESIDUE DISSOLVED 180 C
- EPA Method 160.1

RESIDUE SUSPENDED
- EPA Method 160.2

SULFATE
- EPA Method 375.1
- EPA Method 300

TOTAL ORGANIC CARBON
- EPA Method 415.1

TCLP
- SW846 Method 1311
- SW846 Method 1312

METALS

ALUMINUM
- EPA Method 200.7
- SW846 Method 6010B

ANTIMONY
- EPA Method 200.7
- SW846 Method 6010B

ARSENIC
- EPA Method 200.7
- SW846 Method 6010B

BARIUM
- EPA Method 200.7
- SW846 Method 6010B

BERYLLIUM
- EPA Method 200.7
- SW846 Method 6010B

CADMIUM
- EPA Method 200.7
- SW846 Method 6010B

CALCIUM
- EPA Method 200.7
- SW846 Method 6010B

CHROMIUM TOTAL
- EPA Method 200.7
- SW846 Method 6010B

CHROMIUM HEXAVALENT
- SW846 Method 7196A

COBALT
- EPA Method 200.7
- SW846 Method 6010B

COPPER
- EPA Method 200.7
- SW846 Method 6010B

IRON
- EPA Method 200.7
- SW846 Method 6010B

LEAD
- EPA Method 200.7
- SW846 Method 6010B

MAGNESIUM
- EPA Method 200.7
- SW846 Method 6010B

MANGANESE
- EPA Method 200.7
- SW846 Method 6010B

MERCURY
- EPA Method 245.1
- EPA Method 1631
- SW846 Method 7470A
- SW846 Method 7471A

MOLYBDENUM
- EPA Method 200.7
- SW846 Method 6010B

NICKEL
- EPA Method 200.7
- SW846 Method 6010B

SELENIUM
- EPA Method 200.7
- SW846 Method 6010B

SILVER
- EPA Method 200.7
- SW846 Method 6010B

THALLIUM
- EPA Method 200.7
- SW846 Method 6010B

TIN
- EPA Method 200.7
- SW846 Method 6010B

VANADIUM
- EPA Method 200.7
- SW846 Method 6010B

ZINC
- EPA Method 200.7
- SW846 Method 6010B

ORGANICS

ORGANOCHLORINE PESTICIDES & PCBs
- EPA Method 608

ORGANOCHLORINE PESTICIDES
- SW846 Method 8081A

POLYCHLORINATED BIPHENYLS (PCB'S)
- EPA SW846 Method 8082

PURGEABLE ORGANICS
- EPA Method 624
- SW846 Method 8260B/5030B
- SW846 Method 8260B/5035

BASE NEUTRAL/ACID ORGANICS
- EPA Method 625
- SW846 Method 8270C

CHLORINATED ACID HERBICIDES
- SW846 Method 8151A

This certification requires maintance of an acceptable quality assurance program, use of approved methodology, and satisfactory performance on evaluation samples. Laboratories are subject to civil penalties and/or decertification for infractions as set forth in 15A NCAC 2H.0807.

MINNESOTA MDH DEPARTMENT OF HEALTH

Protecting, maintaining and improving the health of all Minnesotans

CERTIFIED MAIL-RETURN RECEIPT REQUESTED

January 3, 2003

Julie Trivedi
En Chem, Inc. - Madison
1090 Kennedy Avenue
Kimberly, Wisconsin 54136

RE: Laboratory Number 055-999-107

Dear Ms. Trivedi:

We have received your laboratory's Application for Certification, appropriate fees and performance evaluation results. After reviewing all the information/documents received, we are issuing certification for the analytes as listed below. The provisional certification is valid until a certification officer makes an on-site inspection of your laboratory.

Laboratory Number 055-999-107 Certification Expiration Date: 24-JUL-2004

*Denotes provisional certification

Clean Water Program

Acidity*	EPA 305.1	Specific Conductance*	EPA 120.1
Alkalinity*	EPA 310.2	Aluminum*	EPA 200.7
Biochemical Oxygen Demand, 5 day*	EPA 405.1	Antimony*	EPA 200.7
		Arsenic*	EPA 200.7
Biochemical Oxygen Demand, 5 day*	SM 18th ED 5210B	Barium*	EPA 200.7
		Beryllium*	EPA 200.7
Biochemical Oxygen Demand, Carb.*	SM 18th ED 5210B	Boron*	EPA 200.7
		Cadmium*	EPA 200.7
Chemical Oxygen Demand*	EPA 410.4	Calcium*	EPA 200.7
Chloride*	EPA 325.1	Chromium*	EPA 200.7
Nitrogen, Ammonia*	EPA 350.1	Cobalt*	EPA 200.7
Nitrogen, Total Kjeldahl*	EPA 351.1	Copper*	EPA 200.7
Nitrogen, Nitrate*	EPA 353.2	Iron*	EPA 200.7
Nitrogen, Nitrate + Nitrite*	EPA 353.2	Lead*	EPA 200.7
Oil and Grease*	EPA 1664	Magnesium*	EPA 200.7
Organic Carbon, Total*	EPA 415.1	Manganese*	EPA 200.7
Phenol, Total Compounds*	EPA 420.2	Mercury*	EPA 1631
Phosphorus, Ortho*	EPA 365.1	Molybdenum*	EPA 200.7
Phosphorus, Total*	EPA 365.1	Nickel*	EPA 200.7
Solids, Total*	EPA 160.3	Potassium*	EPA 200.7
Solids, Dissolved*	EPA 160.1	Silver*	EPA 200.7
Solids, Nonfilterable (TSS)*	EPA 160.2	Sodium*	EPA 200.7
Solids, Volatile*	EPA 160.4		

Clean Water Program (continued)

Thallium*	EPA 200.7	Toluene*	EPA 624
Tin*	EPA 200.7	Ethyl benzene*	EPA 624
Vanadium*	EPA 200.7	m+p-Xylene*	EPA 624
Zinc*	EPA 200.7	o-Xylene*	EPA 624
Dichlorodifluoromethane*	EPA 624	Styrene*	EPA 624
Chloromethane*	EPA 624	Isopropylbenzene*	EPA 624
Vinyl chloride*	EPA 624	n-Propylbenzene*	EPA 624
Bromomethane*	EPA 624	1,3,5-Trimethylbenzene*	EPA 624
Chloroethane*	EPA 624	tert-Butylbenzene*	EPA 624
Trichlorofluoromethane*	EPA 624	1,2,4-Trimethylbenzene*	EPA 624
1,1-Dichloroethene*	EPA 624	sec-Butylbenzene*	EPA 624
Methylene chloride*	EPA 624	p-Isopropyltoluene*	EPA 624
trans-1,2-Dichloroethene*	EPA 624	n-Butylbenzene*	EPA 624
1,1-Dichloroethane*	EPA 624	Naphthalene*	EPA 624
2,2-Dichloropropane*	EPA 624	Acetone*	EPA 624
cis-1,2-Dichloroethene*	EPA 624	Ethyl ether*	EPA 624
Chloroform*	EPA 624	p-Dioxane*	EPA 624
Bromochloromethane*	EPA 624	2-Chloroethylvinylether*	EPA 624
1,1,1-Trichloroethane*	EPA 624	Methyl ethyl ketone*	EPA 624
Carbon tetrachloride*	EPA 624	Butyl benzyl phthalate*	EPA 625
1,2-Dichloroethane*	EPA 624	Di-2(ethylhexyl) phthalate*	EPA 625
Trichloroethene*	EPA 624	Di-n-butyl phthalate*	EPA 625
1,2-Dichloropropane*	EPA 624	Di-n-octyl phthalate*	EPA 625
Bromodichloromethane*	EPA 624	Diethyl phthalate*	EPA 625
Dibromomethane*	EPA 624	Dimethyl phthalate*	EPA 625
cis-1,3-Dichloropropene*	EPA 624	Aldrin*	EPA 608
trans-1,3-Dichloropropene*	EPA 624	alpha-BHC*	EPA 608
1,1,2-Trichloroethane*	EPA 624	beta-BHC*	EPA 608
1,3-Dichloropropane*	EPA 624	delta-BHC*	EPA 608
Tetrachloroethene*	EPA 624	gamma-BHC (Lindane)*	EPA 608
Chlorodibromomethane*	EPA 624	Chlordane*	EPA 608
1,2-Dibromoethane*	EPA 624	4,4'-DDD*	EPA 608
Chlorobenzene*	EPA 624	4,4'-DDE*	EPA 608
1,1,1,2-Tetrachloroethane*	EPA 624	4,4'-DDT*	EPA 608
Bromoform*	EPA 624	Dieldrin*	EPA 608
1,1,2,2-Tetrachloroethane*	EPA 624	Endosulfan I*	EPA 608
1,2,3-Trichloropropane*	EPA 624	Endosulfan II*	EPA 608
Bromobenzene*	EPA 624	Endosulfan sulfate*	EPA 608
2-Chlorotoluene*	EPA 624	Endrin*	EPA 608
4-Chlorotoluene*	EPA 624	Endrin Aldehyde*	EPA 608
1,3-Dichlorobenzene*	EPA 624	Heptachlor*	EPA 608
1,4-Dichlorobenzene*	EPA 624	Heptachlor epoxide*	EPA 608
1,2-Dichlorobenzene*	EPA 624	PCB-1016*	EPA 608
1,2-Dibromo-3-Chloropropane*	EPA 624	PCB-1221*	EPA 608
1,2,4-Trichlorobenzene*	EPA 624	PCB-1232*	EPA 608
Hexachlorobutadiene*	EPA 624	PCB-1242*	EPA 608
1,2,3-Trichlorobenzene*	EPA 624	PCB-1248*	EPA 608
Benzene*	EPA 624	PCB-1254*	EPA 608

Clean Water Program (continued)

PCB-1260*	EPA 608	Anthracene*	EPA 625
Toxaphene*	EPA 608	Benzo(a)anthracene*	EPA 625
4-Chloro-3-methylphenol*	EPA 625	Benzo(a)pyrene*	EPA 625
2-Chlorophenol*	EPA 625	Benzo(b)fluoranthene*	EPA 625
2,4-Dichlorophenol*	EPA 625	Benzo(g,h,i)perylene*	EPA 625
2,4-Dimethylphenol*	EPA 625	Benzo(k)fluoranthene*	EPA 625
2,4-Dinitrophenol*	EPA 625	Chrysene*	EPA 625
2-Methyl-4,6-dinitrophenol*	EPA 625	Dibenz(a,h)anthracene*	EPA 625
2-Nitrophenol*	EPA 625	Fluoranthene*	EPA 625
Pentachlorophenol*	EPA 625	Fluorene*	EPA 625
Phenol*	EPA 625	Indeno(1,2,3-cd)pyrene*	EPA 625
2,4,6-Trichlorophenol*	EPA 625	Naphthalene*	EPA 625
4-Nitrophenol*	EPA 625	Phenanthrene*	EPA 625
Bis-(2-chloroethyl) ether*	EPA 625	Pyrene*	EPA 625
Bis-(2-chloroethoxy)methane*	EPA 625	2,4-Dinitrotoluene*	EPA 625
4-Bromophenylphenyl ether*	EPA 625	2,6-Dinitrotoluene*	EPA 625
4-Chlorophenylphenyl ether*	EPA 625	Isophorone*	EPA 625
2-Chloronaphthalene*	EPA 625	Nitrobenzene*	EPA 625
Hexachlorobenzene*	EPA 625	3,3'-Dichlorobenzidine*	EPA 625
Hexachlorobutadiene*	EPA 625	N-Nitrosodimethylamine*	EPA 625
Hexachlorocyclopentadiene*	EPA 625	N-Nitrosodiphenylamine*	EPA 625
Hexachloroethane*	EPA 625	N-Nitrosodi-n-propylamine*	EPA 625
1,2,4-Trichlorobenzene*	EPA 625	1,1-Biphenyl*	EPA 625
Acenaphthene*	EPA 625	1,2-Diphenylhydrazine*	EPA 625
Acenaphthylene*	EPA 625		

Resource Conservation and Recovery Program

Arsenic*	EPA 6010B	Silver*	EPA 6010B
Arsenic*	EPA 6020	Silver*	EPA 6020
Barium*	EPA 6010B	Zinc*	EPA 6010B
Barium*	EPA 6020	Zinc*	EPA 6020
Cadmium*	EPA 6010B	Toxicity Characteristic Leaching Procedure*	EPA 1311
Cadmium*	EPA 6020		
Chromium*	EPA 6010B	Acetone*	EPA 8260B
Chromium*	EPA 6020	Carbon disulfide*	EPA 8260B
Copper*	EPA 6010B	Ethyl ether*	EPA 8260B
Copper*	EPA 6020	p-Dioxane*	EPA 8260B
Lead*	EPA 6010B	Methyl ethyl ketone*	EPA 8260B
Lead*	EPA 6020	Methyl isobutyl ketone*	EPA 8260B
Molybdenum*	EPA 6010B	Butyl benzyl phthalate*	EPA 8270C
Molybdenum*	EPA 6020	Di-2(ethylhexyl) phthalate*	EPA 8270C
Nickel*	EPA 6010B	Di-n-butyl phthalate*	EPA 8270C
Nickel*	EPA 6020	Dimethyl phthalate*	EPA 8270C
Selenium*	EPA 6010B	beta-BHC*	EPA 8081A
Selenium*	EPA 6020	gamma-BHC (Lindane)*	EPA 8081A

Resource Conservation and Recovery Program (continued)

4,4'-DDT*	EPA 8081A	Fluoranthene*	EPA 8270C-SIM
Endrin*	EPA 8081A	Indeno(1,2,3-cd)pyrene*	EPA 8270C
PCBs*	EPA 8082	Indeno(1,2,3-cd)pyrene*	EPA 8270C-SIM
Toxaphene*	EPA 8081A	Pyrene*	EPA 8270C
2-Methylphenol*	EPA 8270C	Pyrene*	EPA 8270C-SIM
Benzo(a)anthracene*	EPA 8270C	1,1-Biphenyl*	EPA 8270C
Benzo(a)anthracene*	EPA 8270C-SIM	1,2-Diphenylhydrazine*	EPA 8270C
Benzo(a)pyrene*	EPA 8270C	Benzoic acid*	EPA 8270C
Benzo(a)pyrene*	EPA 8270C-SIM	2,4-D*	EPA 8151A
Benzo(b)fluoranthene*	EPA 8270C	Dalapon*	EPA 8151A
Benzo(b)fluoranthene*	EPA 8270C-SIM	Dinoseb*	EPA 8151A
Benzo(k)fluoranthene*	EPA 8270C	Picloram*	EPA 8151A
Benzo(k)fluoranthene*	EPA 8270C-SIM	2,4,5-T*	EPA 8151A
Dibenz(a,h)anthracene*	EPA 8270C	2,4,5-TP (Silvex)*	EPA 8151A
Dibenz(a,h)anthracene*	EPA 8270C-SIM	Acifluorfen*	EPA 8151A
Fluoranthene*	EPA 8270C	Bentazon*	EPA 8151A

Enclosed is your laboratory's certificate.

The following methods cited on the application are not approved under the Clean Water Program:

Analyte	Method Cited
Carbonaceous Biochemical Oxygen Demand	EPA 405.1
Chloride	EPA 300.0
Cyanide	EPA 335.4
Nitrate Nitrogen	EPA 300.0
Nitrite Nigrogen	EPA 300.0
Sulfate	EPA 300.0
Titanium	EPA 200.7

With the exception of cyanide and titanium, certification was granted for other approved methods that were cited on the application.

Certification is denied for the following analytes/analyte categories under the Clean Water Program and Resource Conservation and Recovery Program because no performance evaluation sample result was provided for the term of July 24, 2001, to July 24, 2002:

Analyte	Method Cited
Nitrite Nitrogen	EPA 354.1
Hexavalent Chromium	SM 3500-Cr-D
Mercury	EPA 6020

Certification is denied for the following analytes/analyte categories under the Clean Water Program because the performance evaluation (PE) sample result provided for the term of July 24, 2001, to July 24, 2002, indicated a result outside of the acceptance limits:

Analyte	Method Cited	PE Study
Sulfide	EPA 376.1	ERA WP-87

Minnesota Rule 4740.2030, Subpart. 2, states: "The laboratory shall provide the commissioner with the results of performance from the approved provider within 30 days after the laboratory receives them. When a provider notifies the laboratory that a performance evaluation sample result falls outside acceptable results, the laboratory must promptly take corrective action. Within 30 days after receiving notice of the unacceptable results, the laboratory must submit to the commissioner documentation of the corrective action planned and taken. Within 30 days after receiving notice of unacceptable results, the laboratory must request a follow-up performance evaluation sample from an approved provider. The laboratory shall provide the commissioner with the results of the follow-up performance evaluation within 30 days after receiving them." Please provide documentation on the corrective actions taken by the laboratory in response to the unacceptable result obtained in the study above and to unacceptable results in any other studies analyzed within the last year.

Provisional certification for low-level mercury under the Clean Water Program has been granted. However, due to recent federal legislation, the method your laboratory cited on the application, EPA 1631C, has been replaced by EPA 1631E. Method 1631C has been withdrawn. Please submit a revised standard operating procedure corresponding to the requirements of EPA 1631E along with method detection limits to us within 60 days of the date you receive this letter in order to continue certification of low level mercury.

One of the methods cited on your application, EPA 413.1, for the analysis of Oil and Grease under the Clean Water Program, is not approved for use by the State of Minnesota. Certification for Oil and Grease is granted for EPA 1664.

Method detection limits were not provided for the following analytes/analyte categories:

Analyte	Method Cited
Sulfide	EPA 376.1
Mercury	EPA 245.1, EPA 6020, EPA 7470A, EPA 7471A
Acrolein, Acrylonitrile	EPA 624
Benzidine	EPA 625
Alachlor	EPA 8081A
3-Methylphenol, 2,3,4,6-Tetrachlorophenol, Benzidine, N-nitrosodi-n-butylamine, bis-2-Chloroisopropylether, Pentachlorobenzene, Pronamide, 1,2,4,5-Tetrachlorobenzene	EPA 8270C
Polyaromatic hydrocarbons	EPA 8310

Certification for these analytes and methods is denied.

If your laboratory wishes to renew its certification, send an application, appropriate fees, changes in your QA/Procedure Manual and most recent performance evaluation sample results to Certification, Public Health Laboratory, Minnesota Department of Health (MDH), 30 days prior to the expiration date noted above.

Your laboratory must analyze a performance evaluation sample from an approved provider for each certified analyte by July 24, 2003. The laboratory must forward the results of these performance evaluation samples to the MDH within 30 days from the date your laboratory receives them. In addition, it is the laboratory's duty to notify the MDH within 30 days of changes in laboratory location or ownership, major analytical equipment, test methodology or supervisory staff, as detailed in Minnesota Rules, Chapter 4740, part 4740.2030, subpart 10.

If you have questions, please call the Environmental Laboratory Certification Program at (612) 676-5200, or you may speak directly with one of the certification staff below:

Sharon Dahl	(612) 676-5243
Suzanne Skorich	(612) 676-5676
Susan Wyatt	(612) 676-5674

Sincerely,

Suzanne Skorich, Certification Officer
Environmental Laboratory Section
Public Health Laboratory Division
Minnesota Department of Health
P.O. Box 9441
Minneapolis, Minnesota 55440-9441

/sss
Enclosure

MINNESOTA MDH DEPARTMENT OF HEALTH

Minnesota Department of Health

Certificate

In accordance with Minnesota Law and Rules

En Chem, Inc. - Madison
1090 Kennedy Avenue
Kimberly, Wisconsin 54136

Laboratory Number: 055-999-107

has been certified for the analytes listed below and in our letter dated January 3, 2003.

Clean Water Program

Acidity*	EPA 305.1	Phosphorus, Ortho*	EPA 365.1	Copper*	EPA 200.7
Alkalinity*	EPA 310.2	Phosphorus, Total*	EPA 365.1	Iron*	EPA 200.7
Biochemical Oxygen Demand, 5 day*	EPA 405.1	Solids, Total*	EPA 160.3	Lead*	EPA 200.7
		Solids, Dissolved*	EPA 160.1	Magnesium*	EPA 200.7
Biochemical Oxygen Demand, 5 day*	SM 18th ED 5210B	Solids, Nonfilterable (TSS)*	EPA 160.2	Manganese*	EPA 200.7
		Solids, Volatile*	EPA 160.4	Mercury*	EPA 1631
Biochemical Oxygen Demand, Carb.*	SM 18th ED 5210B	Specific Conductance*	EPA 120.1	Molybdenum*	EPA 200.7
		Aluminum*	EPA 200.7	Nickel*	EPA 200.7
Chemical Oxygen Demand*	EPA 410.4	Antimony*	EPA 200.7	Potassium*	EPA 200.7
Chloride*	EPA 325.1	Arsenic*	EPA 200.7	Silver*	EPA 200.7
Nitrogen, Ammonia*	EPA 350.1	Barium*	EPA 200.7	Sodium*	EPA 200.7
Nitrogen, Total Kjeldahl*	EPA 351.1	Beryllium*	EPA 200.7	Thallium*	EPA 200.7
Nitrogen, Nitrate*	EPA 353.2	Boron*	EPA 200.7	Tin*	EPA 200.7
Nitrogen, Nitrate + Nitrite*	EPA 353.2	Cadmium*	EPA 200.7	Vanadium*	EPA 200.7
Oil and Grease*	EPA 1664	Calcium*	EPA 200.7	Zinc*	EPA 200.7
Organic Carbon, Total*	EPA 415.1	Chromium*	EPA 200.7		
Phenol, Total Compounds*	EPA 420.2	Cobalt*	EPA 200.7		

Certification Expiration Date: July 24, 2004

* Denotes Provisional Certification

Jan Malcolm, Commissioner of Health

MINNESOTA MDH DEPARTMENT of HEALTH

Minnesota Department of Health

Certificate

In accordance with Minnesota Law and Rules

En Chem, Inc. - Madison
1090 Kennedy Avenue
Kimberly, Wisconsin 54136

Laboratory Number: 055-999-107

has been certified for the analytes listed below and in our letter dated January 3, 2003.

Clean Water Program (continued)

Dichlorodifluoromethane*	EPA 624	cis-1,3-Dichloropropene*	EPA 624	1,2,3-Trichlorobenzene*	EPA 624
Chloromethane*	EPA 624	trans-1,3-Dichloropropene*	EPA 624	Benzene*	EPA 624
Vinyl chloride*	EPA 624	1,1,2-Trichloroethane*	EPA 624	Toluene*	EPA 624
Bromomethane*	EPA 624	1,3-Dichloropropane*	EPA 624	Ethyl benzene*	EPA 624
Chloroethane*	EPA 624	Tetrachloroethene*	EPA 624	m+p-Xylene*	EPA 624
Trichlorofluoromethane*	EPA 624	Chlorodibromomethane*	EPA 624	o-Xylene*	EPA 624
1,1-Dichloroethene*	EPA 624	1,2-Dibromoethane*	EPA 624	Styrene*	EPA 624
Methylene chloride*	EPA 624	Chlorobenzene*	EPA 624	Isopropylbenzene*	EPA 624
trans-1,2-Dichloroethene*	EPA 624	1,1,1,2-Tetrachloroethane*	EPA 624	n-Propylbenzene*	EPA 624
1,1-Dichloroethane*	EPA 624	Bromoform*	EPA 624	1,3,5-Trimethylbenzene*	EPA 624
2,2-Dichloropropane*	EPA 624	1,1,2,2-Tetrachloroethane*	EPA 624	tert-Butylbenzene*	EPA 624
cis-1,2-Dichloroethene*	EPA 624	1,2,3-Trichloropropane*	EPA 624	1,2,4-Trimethylbenzene*	EPA 624
Chloroform*	EPA 624	Bromobenzene*	EPA 624	sec-Butylbenzene*	EPA 624
Bromochloromethane*	EPA 624	2-Chlorotoluene*	EPA 624	p-Isopropyltoluene*	EPA 624
1,1,1-Trichloroethane*	EPA 624	4-Chlorotoluene*	EPA 624	n-Butylbenzene*	EPA 624
Carbon tetrachloride*	EPA 624	1,3-Dichlorobenzene*	EPA 624	Naphthalene*	EPA 624
1,2-Dichloroethane*	EPA 624	1,4-Dichlorobenzene*	EPA 624	Acetone*	EPA 624
Trichloroethene*	EPA 624	1,2-Dichlorobenzene*	EPA 624	Ethyl ether*	EPA 624
1,2-Dichloropropane*	EPA 624	1,2-Dibromo-3-Chloropropane*	EPA 624	p-Dioxane*	EPA 624
Bromodichloromethane*	EPA 624	1,2,4-Trichlorobenzene*	EPA 624	2-Chloroethylvinylether*	EPA 624
Dibromomethane*	EPA 624	Hexachlorobutadiene*	EPA 624	Methyl ethyl ketone*	EPA 624

Certification Expiration Date: July 24, 2004

* Denotes Provisional Certification

Jan Malcolm, Commissioner of Health

MINNESOTA MDH DEPARTMENT OF HEALTH

Minnesota Department of Health

Certificate

In accordance with Minnesota Law and Rules

En Chem, Inc. - Madison
1090 Kennedy Avenue
Kimberly, Wisconsin 54136

Laboratory Number: 055-999-107

has been certified for the analytes listed below and in our letter dated January 3, 2003.

Clean Water Program (continued)

Butyl benzyl phthalate*	EPA 625	Bis-(2-chloroethoxy)methane*	EPA 625	Dibenz(a,h)anthracene*	EPA 625
Di-2(ethylhexyl) phthalate*	EPA 625	4-Bromophenylphenyl ether*	EPA 625	Fluoranthene*	EPA 625
Di-n-butyl phthalate*	EPA 625	4-Chlorophenylphenyl ether*	EPA 625	Fluorene*	EPA 625
Di-n-octyl phthalate*	EPA 625	2-Chloronaphthalene*	EPA 625	Indeno(1,2,3-cd)pyrene*	EPA 625
Diethyl phthalate*	EPA 625	Hexachlorobenzene*	EPA 625	Naphthalene*	EPA 625
Dimethyl phthalate*	EPA 625	Hexachlorobutadiene*	EPA 625	Phenanthrene*	EPA 625
4-Chloro-3-methylphenol*	EPA 625	Hexachlorocyclopentadiene*	EPA 625	Pyrene*	EPA 625
2-Chlorophenol*	EPA 625	Hexachloroethane*	EPA 625	2,4-Dinitrotoluene*	EPA 625
2,4-Dichlorophenol*	EPA 625	1,2,4-Trichlorobenzene*	EPA 625	2,6-Dinitrotoluene*	EPA 625
2,4-Dimethylphenol*	EPA 625	Acenaphthene*	EPA 625	Isophorone*	EPA 625
2,4-Dinitrophenol*	EPA 625	Acenaphthylene*	EPA 625	Nitrobenzene*	EPA 625
2-Methyl-4,6-dinitrophenol*	EPA 625	Anthracene*	EPA 625	3,3'-Dichlorobenzidine*	EPA 625
2-Nitrophenol*	EPA 625	Benzo(a)anthracene*	EPA 625	N-Nitrosodimethylamine*	EPA 625
Pentachlorophenol*	EPA 625	Benzo(a)pyrene*	EPA 625	N-Nitrosodiphenylamine*	EPA 625
Phenol*	EPA 625	Benzo(b)fluoranthene*	EPA 625	N-Nitrosodi-n-propylamine*	EPA 625
2,4,6-Trichlorophenol*	EPA 625	Benzo(g,h,i)perylene*	EPA 625	1,1-Biphenyl*	EPA 625
4-Nitrophenol*	EPA 625	Benzo(k)fluoranthene*	EPA 625	1,2-Diphenylhydrazine*	EPA 625
Bis-(2-chloroethyl) ether*	EPA 625	Chrysene*	EPA 625		

Certification Expiration Date: July 24, 2004
* Denotes Provisional Certification

Jan Malcolm, Commissioner of Health

MINNESOTA MDH DEPARTMENT OF HEALTH

Minnesota Department of Health

Certificate

In accordance with Minnesota Law and Rules

En Chem, Inc. - Madison
1090 Kennedy Avenue
Kimberly, Wisconsin 54136

Laboratory Number: 055-999-107

has been certified for the analytes listed below and in our letter dated January 3, 2003.

Resource Conservation and Recovery Program

Arsenic*	EPA 6010B	Toxicity Characteristic	EPA 1311	Benzo(b)fluoranthene*	EPA 8270C
Arsenic*	EPA 6020	Leaching Proc*		Benzo(b)fluoranthene*	EPA 8270C-SIM
Barium*	EPA 6010B	Acetone*	EPA 8260B	Benzo(k)fluoranthene*	EPA 8270C
Barium*	EPA 6020	Carbon disulfide*	EPA 8260B	Benzo(k)fluoranthene*	EPA 8270C-SIM
Cadmium*	EPA 6010B	Ethyl ether*	EPA 8260B	Dibenz(a,h)anthracene*	EPA 8270C
Cadmium*	EPA 6020	p-Dioxane*	EPA 8260B	Dibenz(a,h)anthracene*	EPA 8270C-SIM
Chromium*	EPA 6010B	Methyl ethyl ketone*	EPA 8260B	Fluoranthene*	EPA 8270C
Chromium*	EPA 6020	Methyl isobutyl ketone*	EPA 8260B	Fluoranthene*	EPA 8270C-SIM
Copper*	EPA 6010B	Butyl benzyl phthalate*	EPA 8270C	Indeno(1,2,3-cd)pyrene*	EPA 8270C
Copper*	EPA 6020	Di-2(ethylhexyl) phthalate*	EPA 8270C	Indeno(1,2,3-cd)pyrene*	EPA 8270C-SIM
Lead*	EPA 6010B	Di-n-butyl phthalate*	EPA 8270C	Pyrene*	EPA 8270C
Lead*	EPA 6020	Dimethyl phthalate*	EPA 8270C	Pyrene*	EPA 8270C-SIM
Molybdenum*	EPA 6010B	beta-BHC*	EPA 8081A	1,1-Biphenyl*	EPA 8270C
Molybdenum*	EPA 6020	gamma-BHC (Lindane)*	EPA 8081A	1,2-Diphenylhydrazine*	EPA 8270C
Nickel*	EPA 6010B	4,4'-DDT*	EPA 8081A	Benzoic acid*	EPA 8270C
Nickel*	EPA 6020	Endrin*	EPA 8081A	2,4-D*	EPA 8151A
Selenium*	EPA 6010B	PCBs*	EPA 8082	Dalapon*	EPA 8151A
Selenium*	EPA 6020	Toxaphene*	EPA 8081A	Dinoseb*	EPA 8151A
Silver*	EPA 6010B	2-Methylphenol*	EPA 8270C	Picloram*	EPA 8151A
Silver*	EPA 6020	Benzo(a)anthracene*	EPA 8270C	2,4,5-T*	EPA 8151A
Zinc*	EPA 6010B	Benzo(a)anthracene*	EPA 8270C-SIM	2,4,5-TP (Silvex)*	EPA 8151A
Zinc*	EPA 6020	Benzo(a)pyrene*	EPA 8270C	Acifluorfen*	EPA 8151A
		Benzo(a)pyrene*	EPA 8270C-SIM	Bentazon*	EPA 8151A

Certification Expiration Date: July 24, 2004

Jan Malcolm, Commissioner of Health

* Denotes Provisional Certification

MINNESOTA MDH DEPARTMENT OF HEALTH

Minnesota Department of Health

Certificate

In accordance with Minnesota Law and Rules

En Chem, Inc. - Madison
1090 Kennedy Avenue
Kimberly, Wisconsin 54136

Laboratory Number: 055-999-107

has been certified for the analytes listed below and in our letter dated January 3, 2003.

Clean Water Program (continued)

Aldrin*	EPA 608	Dieldrin*	EPA 608	PCB-1221*	EPA 608
alpha-BHC*	EPA 608	Endosulfan I*	EPA 608	PCB-1232*	EPA 608
beta-BHC*	EPA 608	Endosulfan II*	EPA 608	PCB-1242*	EPA 608
delta-BHC*	EPA 608	Endosulfan sulfate*	EPA 608	PCB-1248*	EPA 608
gamma-BHC (Lindane)*	EPA 608	Endrin*	EPA 608	PCB-1254*	EPA 608
Chlordane*	EPA 608	Endrin Aldehyde*	EPA 608	PCB-1260*	EPA 608
4,4'-DDD*	EPA 608	Heptachlor*	EPA 608	Toxaphene*	EPA 608
4,4'-DDE*	EPA 608	Heptachlor epoxide*	EPA 608		
4,4'-DDT*	EPA 608	PCB-1016*	EPA 608		

Certification Expiration Date: July 24, 2004
* Denotes Provisional Certification

Jan Malcolm, Commissioner of Health

DEPARTMENT OF THE ARMY
CORPS OF ENGINEERS
HTRW CENTER OF EXPERTISE
12565 WEST CENTER ROAD
OMAHA, NEBRASKA 68144-3869

REPLY TO
ATTENTION OF:

August 21, 2001

Hazardous, Toxic and Radioactive Waste
Center of Expertise

En Chem, Inc.
ATTN: Julie Trivedi
525 Science Drive
Madison, WI 53711-1060

Gentlemen:

This correspondence addresses the recent evaluation of En Chem, Inc. of Madison, WI by the U.S. Army Corps of Engineers (USACE) for chemical analysis in support of the USACE Hazardous, Toxic and Radioactive Waste Program.

Your laboratory is now validated for the parameters listed below:

METHOD	PARAMETERS	MATRIX[1]
8330	Explosives	Water[2]
8330	Explosives	Solids[2]
8151A	Herbicides	Water[2]
8151A	Herbicides	Solids
8081A	Organochlorine Pesticides	Water[2]
8081A	Organochlorine Pesticides	Solids
8082	Polychlorinated Biphenyls	Water[2]
8082	Polychlorinated Biphenyls	Solids[2]
8270C	Semivolatile Organics	Water[2]
8270C	Semivolatile Organics	Solids[2]
6010B/7000A	TAL Metals[3]	Water[2]
6010B/7000A	TAL Metals[3]	Solids[2]
8260B	Volatile Organics	Water[2]
8260B	Volatile Organics	Solids

Remarks:

1) 'Solids' includes soils, sediments, and solid waste.

2) The laboratory has successfully analyzed a performance evaluation sample for this method/matrix.

3) TAL Metals: Aluminum, antimony, arsenic, barium, beryllium, cadmium, calcium, chromium, cobalt, copper, iron, lead, magnesium, manganese, mercury, nickel, potassium, selenium, silver, sodium, thallium, vanadium, and zinc.

Enclosed for your information is a copy of the Laboratory Inspection and Evaluation Report. Your laboratory has responded to the deficiencies as noted in the report. No further responses are necessary.

Based on the successful analysis of the performance evaluation samples, the results of the laboratory inspection, and your Corrective Action Report, your laboratory will be validated for sample analysis by the methods listed above. The period of validation is 24 months and expires on August 21, 2003.

The USACE reserves the right to conduct additional laboratory inspections or to suspend validation status for any or all of the listed parameters if deemed necessary. It should be noted that your laboratory may not subcontract USACE analytical work to any other laboratory location without the approval of this office. This laboratory validation does not guarantee the delivery of any analytical samples from a USACE Contracting Officer Representative.

Any questions or comments can be directed to Richard Kissinger at (402) 697-2569. General questions regarding laboratory validation may be directed to the Laboratory Validation Coordinator at (402) 697-2574.

Sincerely,

for Marcia C. Davies, Ph.D.
Director, USACE Hazardous,
Toxic and Radioactive Waste
Center of Expertise

Enclosure

DEPARTMENT OF THE NAVY

NAVAL FACILITIES ENGINEERING SERVICE CENTER
1100 23RD AVE
PORT HUENEME CA 93043-4370

IN REPLY REFER TO:
NFESC 413
November 8, 2001

Ms. Julie Trivedi
Interim Quality Assurance Officer
En Chem, Inc.
525 Science Drive
Madison, WI 53711-1060

Dear Ms. Trivedi,

This correspondence addresses the status of En Chem, Inc. of Madison, Wisconsin in the Navy Installation Restoration (IR) Quality Assurance (QA) Program as administered by the Naval Facilities Engineering Service Center (NFESC).

Your laboratory is accepted to perform sample analysis for the methods listed in Table 1. The period of acceptance expires August 21, 2003. This acceptance does not guarantee the delivery of any analytical samples. Acceptance is facility specific and can not be transferred to an affiliated or subcontract laboratory.

Acceptance is based on the latest assessment executed by the United States Army Corps of Engineers Hazardous, Toxic and Radioactive Waste (USACE-HTRW) Omaha, Nebraska. The period of acceptance corresponds with the date established by USACE-HTRW. The Army's assessment included an onsite inspection performed on June 26-28, 2001, and the processing of proficiency testing (PT) samples.

The Navy reserves the right to conduct additional laboratory assessments or to suspend or revoke acceptance status for any or all of the listed parameters if deemed necessary.

Table 1

METHOD	PARAMETER	MATRIX
8330	Explosives	Water(1) / Solids(1)
8151A	Herbicides	Water(1) / Solids
8081A	Organochlorine Pesticides	Water(1) / Solids
8082	Polychlorinated Biphenyls	Water(1) / Solids(1)

8270C	Semivolatile Organics	Water[1] / Solids[1]
6010B/7000A	TAL Metals: Aluminum, antimony, arsenic, barium, beryllium, cadmium, calcium, chromium, cobalt, copper, iron, lead, magnesium, manganese, mercury, nickel, potassium, selenium, silver, sodium, thallium, vanadium, and zinc	Water[1]/Solids[1]
8260B	Volatile Organics	Water[1] / Solids

Acceptance for use for parameters not identified on the table will be determined by Navy project personnel.

The laboratory should notify NFESC if there are parameters not presented on Table 1 that the laboratory expects to run on a routine basis in support of Navy installation restoration projects. In these circumstances the laboratory's capability to run the tests will be reviewed and the table will be modified accordingly.

Questions concerning the information provided should be directed to the NFESC IR QA Program coordinator, Ms. Patricia Moreno at (805) 982-1659, or via email at morenop@nfesc.navy.mil.

Sincerely,

Douglas A. Zillmer
Supervisor, Consultation/Information
Management Branch

[1] The laboratory has successfully analyzed a PT sample for this method/matrix sent by USACE-HTRW.

APPENDIX I

LABORATORY FORMS

Title

Form I-1 Madison Bottle Request Form

Form I-2 Chain of Custody Record

Form I-3 Cooler Receipt Log

Form I-4 Madison Master Logbook Form

Form I-5 Madison Laboratory Tracking Sheet

Form I-6 Nonconformance Form

Form I-7 Sample Receiving Nonconformance Form

Bottle Request Form

Madison Office/Laboratory
En Chem, Inc.
525 Science Dr.
Madison, WI 53711
608-232-3300

Green Bay Office/Laboratory
En Chem, Inc.
1241 Bellevue St., Suite 9
Green Bay, WI 54302
920-469-2436

PLEASE SHIP SAMPLES TO: ___**Madison Laboratory** ___ **Green Bay Laboratory**

Client Name:_____
Client Contact:_____
Project #:_____
Project Name:_____
Project State:_____
Sample Date:_____
Sample Type:_____

Bottle Requestor:_____
Date Bottles Needed:_____
Date Requested:_____

Bottle Preparer:_____
Date Prepared:_____
Checked By:_____

Deliver to:_____
_____
_____
_____
Attn:_____
Phone:_____

Shipping Charge:_____
Method of Shipment:_____
Client Fed Ex/UPS #:_____
Cooler #'s: _____
Number/Size of Coolers:_____

EnChem Project Manager/Phone #: _____

Check if Required: __Temp. Blank __Chains of Custody __Labels __Custody Seals __Trip Blank

# of Smpls	# of Bottles	Size	Type	Preserv.	Associated Parameters	Bottle Lot Number

Comments:

(Please Print Legibly)

Company Name: _____

Branch or Location: _____

Project Contact: _____

Telephone: _____

Project Number: _____

Project Name: _____

Project State: _____

Sampled By (Print): _____

EN CHEM INC.

☐ 1241 Bellevue St., Suite 9
Green Bay, WI 54302
920-469-2436
FAX 920-469-8827

☐ 525 Science Drive
Madison, WI 53711
608-232-3300
FAX: 608-233-0502

CHAIN OF CUSTODY

Page _____ of _____

P.O. # _____ Quote # _____

Mail Report To: _____

Company: _____

Address: _____

Invoice To: _____

Company: _____

Address: _____

Mail Invoice To: _____

*Preservation Codes

A=None B=HCL C=H2S04 D=HN03 E=EnCore F=Methanol G=NaOH
H = Sodium Bisulfate Solution I = Other

FILTERED? (YES/NO)

PRESERVATION (CODE)*

ANALYSES REQUESTED

TOTAL # OF BOTTLES SENT

Data Package Options
(please circle if requested)
Results Only
EnChem Level III (Subject to Surcharge)
EnChem Level IV (Subject to Surcharge)

Regulatory Program	Matrix Codes
UST	W=Water
RCRA	S=Soil
SDWA	A=Air
NPDES	C=Charcoal
CERCLA	B=Biota
	Sl=Sludge

LABORATORY ID (Lab Use Only)	FIELD ID	COLLECTION DATE	COLLECTION TIME	MATRIX									CLIENT COMMENTS	LAB COMMENTS (Lab Use Only)

Rush Turnaround Time Requested (TAT) - Prelim
(Rush TAT subject to approval/surcharge)

Date Needed: _____

Transmit Prelim Rush Results by (circle):

Phone Fax E-Mail

Phone #: _____

Fax #: _____

E-Mail Address: _____

Samples on HOLD are subject to special pricing and release of liability

Relinquished By:	Date/Time:	Received By:	Date/Time:
Relinquished By:	Date/Time:	Received By:	Date/Time:
Relinquished By:	Date/Time:	Received By:	Date/Time:
Relinquished By:	Date/Time:	Received By:	Date/Time:
Relinquished By:	Date/Time:	Received By:	Date/Time:

En Chem Project No.

Sample Receipt Temp.

Sample Receipt pH (Wet/Metals)

Cooler Custody Seal

Present / Not Present

Intact / Not Intact

Version 1.0: 9/

EN CHEM INC.

chemistry for the environment

☐ 1241 Bellevue St., Green Bay, WI 54302
920-469-2436; FAX: 920-469-8827
☐ 525 Science Dr., Madison, WI 53711
608-232-3300; FAX: 608-233-5052
☐ 1423 N. 8th Street, Superior, WI 54880
715-392-5844; FAX: 715-392-5843

Chain of Custody

☐ **Subcontract** ☐ **En Chem Internal Split**

From: En Chem - _____

To: _____

_____

_____

Project Due: _____

☐ Normal Turn ☐ Quick Turn

Project State: _____

En Chem Project No.: _____

Requested Analysis

Filtered? Y/N
Preservative

Preservation Code

A= None B=HCL
C= H2SO4 D=HNO3
E = EnCore F=Methanol
G= NaOH O=Other

En Chem Lab No.	Client Field I.D.	Date Sampled	Sample Type	No. of Bottles								Sub Lab Sample No.

Relinquished By:	Date/Time:	Received By:	Date/Time:
Relinquished By:	Date/Time:	Received By:	Date/Time:
Relinquished By:	Date/Time:	Received By:	Date/Time:

If you have questions, please contact _____ **at:** ☐ **Green Bay** ☐ **Madison** ☐ **Superior**

Please FAX/send final report to _____ **at the:** ☐ **Green Bay** ☐ **Madison** ☐ **Superior Lab.**

Final report to be generated by En Chem: ☐ **Green Bay** ☐ **Madison** ☐ **Superior**

rev. 3/13/00 - woelfel\misc_frm\subcon.doc-word)

En Chem, Inc. Cooler Receipt Log

Batch No._____

Project Name or ID_____ No. of Coolers:_____Temps:_____

A. Receipt Phase: Date cooler was opened:_____ By:_____

1: Were samples received on ice? (Must be ≤ 6 C)....YES NO[2]

2. Was there a Temperature Blank?....YES NO

3: Were custody seals present and intact? (Record on COC)....YES NO

4: Are COC documents present?....YES NO[2]

5: Does this Project require quick turn around analysis?....YES NO

6: Is there any sub-work?....YES NO

7: Are there any short hold time tests?....YES NO

8: Are any samples nearing expiration of hold-time? (Within 2 days).... YES[1] NO Contacted by/Who_____

9: Do any samples need to be Filtered or Preserved in the lab?.... YES[1] NO Contacted by/Who_____

B. Check-In Phase: Date samples were Checked-in:_____ By:_____

1: Were all sample containers listed on the COC received and intact?....YES NO[2] NA

2: Sign the COC as received by En Chem. Completed....YES NO

3: Do sample labels match the COC? ....YES NO[2]

4: Check sample pH of preserved samples. (Not VOCs) Completed....YES NO NA

5: Do samples have correct chemical preservation?....YES NO[2] NA

6: Are dissolved parameters field filtered?....YES NO[2] NA

7: Are sample volumes adequate for tests requested? ....YES NO[2]

8: Are VOC samples free of bubbles >6mm ....YES NO[2] NA

9: Enter samples into logbook. Completed....YES NO

10: Place laboratory sample number on all containers and COC. Completed....YES NO

11: Complete Laboratory Tracking Sheet (LTS). Completed....YES NO NA

12: Start Nonconformance form. ....YES NO NA

13: Initiate Subcontracting procedure. Completed....YES NO NA

14: Check laboratory sample number on all containers and COC. ....._____...YES NO NA

Short Hold-time tests:

48 Hours or less	7 days	Footnotes .
Coliform (6 hrs)	Flashpoint	1 Notify proper lab group
Hexavalent Chromium (24 Hrs)	TSS	immediately.
BOD	Total Solids	2 Complete nonconformance memo.
Nitrite or Nitrate	TDS	
Low Level Mercury	Sulfide	
Ortho Phosphorus	Free Liquids	
Turbidity	Total Volatile Solids	
Surfactants	Aqueous Extractable Organics- ALL	
Sulfite	Unpreserved VOC's	
En Core Preservation	Ash	
Color		

Rev. 9/5/2001, Attachment to 1-REC-5.
Subject to QA Audit.

Reviewed by/date_____

p:/everyone/forms/samplereceiving/crl.doc

Date Yr	Project Information				Brota	HNO3 (pl/gl)					H2SO4 (pl/gl)				Unpreserved (pl/gl)							HCL		MeOH	NaOH		NaOH	Logged By
	Client Information	Matrix	Batch #	Sample #		125	250	500	1L	4L	125	250	500	1L	encore	40	60	125	250	500	1L	40	1L	60	250	500	1L	
	Submitter Name																											
	Project Name																											
	Project #																											
	Comments:																											QC___
	Submitter Name																											
	Project Name																											
	Project #																											
	Comments:																											QC___
	Submitter Name																											
	Project Name																											
	Project #																											
	Comments:																											QC___
	Submitter Name																											
	Project Name																											
	Project #																											
	Comments:																											QC___

ENCHEM INC.

Locations:
A Archive Room
D&E Semi-volatiles (water)
F Semi-volatiles (soil)
G Semi-volatiles (extra)
S Subcontracted after receipt
V Volatiles
W Walk-in Sample Receiving
X Walk-in Wet-Chemistry
Z Freezer

PAGE

Form B-4

LTS

Shelf	Batch# & Sample Number(s)	Bottle type & Preservation	in	out	in	out	in	out	in	out	in	out	in	Disposal Date & Haz Code	Return or Store

Comments: _____

_____

_____

Disposed

Storage Location_____

Project_____ **Project #**_____ **Sample Type**_____ **Location**_____

En Chem, Inc.

NONCONFORMANCE REPORT

Laboratory Section:
Inorganic _____
Organic _____

Number (QA Assigned): _____
Date: _____
Initiator: _____

Workorder Numbers: _____
Sample Numbers: _____

LIMS Test Group ID: _____

Describe the nonconformance / occurrence: _____

Action taken for this occurrence: _____

Section Review: _____ **Date:** _____

QA Officer's Approval: _____ **Date:** _____

Corrective action follow-up comments: _____

Copy Routing:
Project Manager: _____

THE ORIGINAL WILL BE ON FILE IN THE QUALITY ASSURANCE OFFICE

En Chem, Inc.

SAMPLE ENTRY NONCONFORMANCE REPORT

Number (QA Assigned): _____

Date: _____

Initiator: _____

Problem (please check appropriate box):

No Ice / Temp. ☐
Broken Bottles / Cap ☐
Hold Time ☐
Headspace ☐
Volume ☐
Container ☐
Labelling ☐
Preservation ☐
Other ☐

Batch #	Lab ID #	Field ID	Comments

PM Comments: _____

Section Review: _____ **Date:** _____

QA Officer's Approval: _____ **Date:** _____

Copy Routing:
Project Manager: _____

THE ORIGINAL WILL BE ON FILE IN THE QUALITY ASSURANCE OFFICE

APPENDIX J

SOP LISTING

GEN-1	Preparation of Standard Operating Procedure	4	12/98	FINAL
GEN-2	Distribution, Receipt, Return and Accessibility of QA Documents	3	11/98	FINAL
GEN-3	Determination of Sample Holding Times	1	7/99	FINAL
GEN-4	Data Recording, Signatures, Dates, and Data Handling	8	1/15/02	FINAL
GEN-5	Sample Disposal	2	9/6/2001	FINAL
GEN-6	Data Reduction, Review, Validation, and Reporting	1	7/11/01	FINAL
GEN-7	Sample Chain of Custody	4	5/97	FINAL
GEN-8	Acknowledgement of Exposure to and Revision of Standard Operating Procedures	2	12/98	FINAL
GEN-9	Purchasing/ Supply Request/ Receiving	1	10/96	**Archive**
GEN-10	Courier Service	1	6/96	**Archive**
GEN-11	Closed			
GEN-12	Hazardous Waste Handling Procedures	1	8/01	FINAL
GEN-13	Preparing Archive Boxes	1	11/00	FINAL
GEN-14	Saturday Sample Receipt	0	5/98	FINAL
GEN-15	Nonconformance Memos	2	10/24/01	FINAL
GEN-16	Laboratory Notebooks	1	3/00	FINAL
GEN-17	Software Installation/Validation	0	11/98	FINAL
GEN-18	Training of Employees and Maintenance of Training Files	0	11/98	FINAL
GEN-19	Laboratory Contingency Plan for Sample Analysis	0	11/98	FINAL
GEN-20	Data Review Checklists for Level 4 Data Packages	0	12/98	**Archived** See Gen-6
GEN-21	Standard Laboratory Deliverable Formats	0	12/98	FINAL
GEN-22	Level 4 Data Package Assembly	0	12/98	FINAL
GEN-23	Policy for Data Confidentiality and Release of Data	0	11/98	FINAL
GEN-24	Label Removal	0	11/98	FINAL
GEN-25	Recordkeeping, Handling, and Disposition	0	11/98	FINAL
GEN-26	Identification of QC Samples on Laboratory Data	0	12/98	FINAL

En Chem - Madison	Title	Control		
SOP #	GENERAL (GEN)	Rev #	DATE	Status
GEN-27	Project Management	0	1/99	FINAL
GEN-28	Review and Verification of Data Downloads	0	2/99	FINAL
GEN-29	Resolution of Client Complaints	0	3/00	FINAL
GEN-30	Sample Acceptance Policy	0	4/00	FINAL
GEN-31	Sample Narratives	0	4/00	FINAL
GEN-32	Archive Database Entry/Query	0	5/00	FINAL
GEN-33	Hazardous Waste Contingency Plan	0	3/00	**Archive**
GEN-34	Archive Box Retrieval	0	5/00	FINAL
GEN-35	Special Requirements for Analysis	1	11/00	FINAL

En Chem - Madison	Title	Control		
SOP #	LABORATORY (LAB)	Rev. #	DATE	Status
LAB-1	Pipettor Calibration	3	3/00	FINAL
LAB-2	Laboratory Corrective Action Form			**Archived**
LAB-3	Nonconformance Memos			**Archived**
LAB-4	Labeling of Reagents and Solutions			**Archived**
LAB-5	Recording of Solvent and Reagent Lot Numbers	1	8/96	Final
LAB-6	Charting of Recoveries in Control Samples	3	12/98	Final
LAB-7	Corning 220 pH Meter Operation	2	11/00	Final
LAB-8	Traceability of Analytical Standards	2	2/97	Final
LAB-9	Acid Handling	1	4/00	Final
LAB-10	Thermom/Inst Temp Cal.	1	6/99	Final
LAB-11	Compositing and Homogenizing of Samples	1	4/00	Final
LAB-12	Refrigerator and Freezer Temperature Monitoring	5	1/9/02	Final
LAB-13	Drying Oven Temperature Monitoring	2	9/96	Final
LAB-14	MDL Determination	2	3/00	Final
LAB-15	DI Water System Check	3	11/98	Final
LAB-16	Soils, Total Solids	2	5/01	Final
LAB-17	Monitoring and Changing Compressed Gas Cylinders	1	4/00	Final
LAB-18	Automatic Dishwasher Hobart Am-14	1	6/01	Final
LAB-19	Handling and Homogenization of Small Rodent Samples prior to Extraction and Digestion	0	10/99	Final
LAB-20	Orion pH Meter	1	4/00	Final
LAB-21	Preservation of VOC Samples in Solid Matricies by Method 5035	0	2/98	Final
LAB-22	Traceability of Laboratory Reagents	0	11/98	Final
LAB-23	ASTM- Soils, Total Solids.	1	4/00	Final
LAB-24	Automatic Dishwasher	0	4/99	Final
LAB-25	Inorganics Glassware Cleaning	1	4/00	Final
LAB-26	Toploader Balance Operation	1	4/00	Final
LAB-27	Preparation of Biological Tissues for Laboratory Determinations	0	6/99	Final
LAB-28	US Berkel Meat Chopper	0	8/00	Final
LAB-29	Waring Laboratory Blender	0	8/00	Final

EnChem- Madison	Title	Control		
SOP #	LABORATORY (LAB)	Rev #	DATE	Status
LAB-30	Manual Integrations	1	10/19/01	Final
LAB-31	Solid Sample Homogenization	0	1/15/02	**Draft**
LAB-32	Raynger PM IR Temperature Gun Verification & Reading Correction	0	1/30/02	Final

En Chem - Madison	Title	Control		
SOP #	LEACHING PROCEDURES (LCH)	Rev #	DATE	Status
LCH-1	Digital Hotplate/Stirrer PMC 730	0	7/99	FINAL
LCH-2	TCLP Leaching Procedure	3	1/15/02	FINAL
LCH-3	TCLP Neutral Leach	0	7/99	FINAL
LCH-4	SPLP Leaching Procedure	1	1/01	FINAL
LCH-5	EPTox Leaching Procedure	0	7/99	FINAL
LCH-6	EPW (Water) Leach Indiana Leach Test	0	7/99	FINAL
LCH-7	ZHE Extraction Procedure for Volatile Compounds	0	7/99	FINAL
LCH-8	MEP Leaching Procedure	0	7/99	FINAL
LCH-9	ASTM Shake Extraction of Solid Waste With Water	1	4/00	FINAL
LCH-10	AFS Leaching Procedure	0	7/99	FINAL
LCH-11	ZHE Vessel Cleaning Procedure	0	7/99	FINAL

En Chem - Madison	Title	Control		
SOP #	METALS (MET)	Rev #	DATE	Status
MET-1	Closed			
MET-2	Acid Digestion of Water for Dissolved or Total Recoverable Metals-ICP	8	2/00	FINAL
MET-3	Acid Digestion of Water for Total Metals-ICP	7	2/00	FINAL
MET-4	Acid Digestion of Water for Total Metals-GFAA	6	2/00	FINAL
MET-5	Acid Digestion of Water for Arsenic and Selenium-GFAA	7	2/00	FINAL
MET-6	Acid Digestion of Solid Sample	9	10/00	FINAL
MET-7	Acid Digestion of Solid Samples for Silver, Antimony and Mercury	7	3/00	FINAL
MET-8	Acid Digestion of Solid Sample-GFAA			**Archived**
MET-9	Total Solids Dried at 103-105°C			**Archived**
MET-10	GFAA Spectrophotometer 5100Z (2)	3	4/00	FINAL
MET-11	AA Spectrophotometer P.E. 3100			**Archived**
MET-12	Open			
MET-13	Furnace Analysis of Lead	6	4/00	FINAL
MET-14	Furnace Analysis of Selenium	5	7/99	FINAL
MET-15	Furnace Analysis of Antimony	3	4/00	FINAL
MET-16	Furnace Analysis of Thallium	5	4/00	FINAL
MET-17	Open			
MET-18	Furnace Analysis of Silver	5	4/00	FINAL
MET-19	Analytical Calculations and Significant Figures			**Archived**
MET-20	Furnace Analysis of Cadmium	7	4/00	FINAL
MET-21	Furnace Analysis of Arsenic	6	4/00	FINAL
MET-22	Furnace Analysis of Chromium	6	4/00	FINAL
MET-23	Furnace Analysis of Copper	3	4/00	FINAL
MET-24	Furnace Analysis of "Screen Samples"			**Archived**
MET-25	GFAA Spectrophotometer 5100Z (1)			**Archived**
MET-26	Closed			
MET-27	ICP-AES	11	1/4/02	FINAL
MET-28	ICP-P2			**Archived**
MET-29	Hardness by Calculation	3	4/00	FINAL
MET-30	Mercury Analysis of Aqueous Samples by CVAA	7	3/01	FINAL
MET-31	Mercury Analysis of Compositional Samples by CVAA	9	12/27/01	FINAL
MET-32	Digital Hotplate/Stirrer PMC 730			Trans. to LCH SOP
MET-33	TCLP Leaching Procedure			Trans. to LCH SOP
MET-34	TCLP Neutral Leach			Trans. to

En Chem - Madison SOP #	Title METALS (MET)	Control Rev #	DATE	Status
				LCH SOP
MET-35	SPLP Leaching Procedure			Trans. to LCH SOP
MET-36	EPTox Leaching Procedure			Trans. to LCH SOP
MET-37	EPW (Water) Leach Indiana Leach Test			Trans. to LCH SOP
MET-38	ZHE Extraction Procedure for Volatile Compounds			Trans. to LCH SOP
MET-39	MEP Leaching Procedure			Trans. to LCH SOP
MET-40	ASTM Shake Extraction of Solid Waste With Water			Trans. to LCH SOP
MET-41	AFS Leaching Procedure			Trans. to LCH SOP
MET-42	TJA ICP Instrument Operating Procedure	3	7/00	FINAL
MET-43	Hexavalent Chromium Flame AA Analysis			**Archived**
MET-44	Hexavalent Chromium Chelation Extraction			**Archived**
MET-45	Microwave Digestion Aqueous	3	6/01	FINAL
MET-46	Microwave Digestion Compositional	3	6/01	FINAL
MET-47	Questron Q-wave 3000 Operation	2	2/00	**Archived**
MET-48	ZHE Vessel Cleaning Procedure	0	1/97	Trans. to LCH SOP
MET-49	Hexavalent Chromium Colorimetric			**Archived**
MET-50	Graphite Furnace Atomic Absorption Spectrometer			**Archived**
MET-51	Acid Volatile Sulfide			**Archived**
MET-52	TJA ICAP 61E			**Archived**
MET-53	Alkaline Extraction of Hexavalent Chromium			**Archived**
MET-54	GFAA Spectrophotometer 5100Z (3)			**Archived**
MET-55	Cation Exchange Capacity	0	7/00	FINAL
MET-56	Spiking Procedure for Metals Analysis	2	3/00	FINAL
MET-57	FIMS AA Spectrophotometer	2	3/00	FINAL
MET-58	Determination of Trace Metals by ICP-MS	4	8/00	FINAL
MET-59	Acid Digestion of Biota Samples	1	3/00	FINAL
MET-60	MARS5 CEM Microwave	0	8/17/01	FINAL
MET-61	Hot Block Tube Volume Verification	0	10/24/01	FINAL

En Chem - Madison	Title	Control		
SOP #	Quality Assurance (QAU)	Rev #	Date	Status

QAU-1	Quality Assurance Facility Audit Procedures	2	12/98	Final

En Chem - Madison	Title	Control		
SOP #	RECEIVING	Rev #	Date	Status
REC-1	LIMS Representation of Special Requests	0	5/94	**Archived**
REC-2	Sample Bottle Tags	1	9/97	Final
REC-3	Sample Bottle Requests and Preparation	2	1/15/02	Final
REC-4	Subcontracting	1	11/30/01	Final
REC-5	Cooler Receipt Log	2	5/01	Final
REC-6	Closed			
REC-7	Sample Receipt and Log-in	3	5/01	Final
REC-8	Chain of Custody	2	11/30/01	Final
REC-9	Balance Calibration and Tare Wt. of 60-mL Containers	1	10/96	Final
REC-10	Sample Storage	1	8/96	Final
REC-11	EnCore Sampler Extrusion	0	9/96	Final
REC-12	Closed			
REC-13	Balance Cal. & Initial Weighing for Total Solids	1	9/96	Final

En Chem - Madison	Title	Control		
SOP #	SEMIVOLATILES (SVO)	Rev #	Date	Status
SVO-1	Extraction of Water Samples for Base/Neutral/Acids	4	7/9/2001	Final
SVO-2	Extraction for TCLP Base/Neutral/Acids	3	2/98	Final
SVO-3	Extraction of Water Samples for Base/Neutral/Acids Continuous Liquid-Liquid Extraction	4	12/98	Final
SVO-4	Extraction of Soil Samples for Base/Neutral/Acids	3	2/98	Final
SVO-5	Extraction of Soil Samples for Base/Neutral/Acids CLP Protocol	2	8/96	Final
SVO-6	Extraction of Water Samples for Organochlorine Pesticides/PCBs	4	7/00	Final
SVO-7	Extraction for TCLP Organochlorine Pesticides	3	2/98	Final
SVO-8	Extraction of Organochlorine Pesticide/PCB Water Samples CLP Protocol	2	5/97	Final
SVO-9	Extraction of Water Samples for Organophosphorus Pesticides	1	2/94	**Archived**
SVO-10	Extraction of Soil Samples for Organochlorine Pesticides/PCBs	3	7/98	Final
SVO-11	Extraction of Organochlorine Pesticide/PCB Soil Samples CLP Protocol	2	5/97	Final
SVO-12	Extraction of Soil Samples for Organophosphorus Pesticides	1	3/97	**Archived**
SVO-13	Extraction of Water Samples for Chlorinated Herbicides	4	1/9/02	Final
SVO-14	Extraction for TCLP Chlorinated Herbicides	2	3/97	Final
SVO-15	Extraction of Water Samples for Total Petroleum Hydrocarbons as Diesel	1	2/94	**Archived**
SVO-16	Extraction of Water Samples for Diesel Range Organics (DRO)	2	6/95	**Archived**

En Chem - Madison	Title	Control		
SOP #	SEMIVOLATILES (SVO)	Rev #	Date	Status
SVO-17	Extraction of Total Petroleum Hydrocarbons as Diesel Soil Samples	1	2/94	**Archived**
SVO-18	Extraction of Soil Samples for Diesel Range Organics (DRO)	2	6/95	**Archived**
SVO-19	Medium Level Extraction of Soil Samples for Base/Neutral/Acids	2	5/97	Final
SVO-20	Medium Level Extraction of Soil Samples for Base/Neutral/Acids CLP Protocol	2	5/97	Final
SVO-21	Medium Level Extraction of Soil Samples for Toxaphene and PCBs	2	5/97	Final
SVO-22	Extraction of Oil Samples for PCBs	3	3/00	Final
SVO-23	Extraction of Water Samples for Total Petroleum Hydrocarbons by Infrared Spectroscopy	1	2/97	Final
SVO-24	Extraction of Soil Samples for Total Petroleum Hydrocarbons by Infrared Spectroscopy	2	2/97	Final
SVO-25	Florisil Cleanup	2	3/97	Final
SVO-26	Gel Permeation Chromotography	2	11/97	Final
SVO-27	Sulfur Cleanup	1	9/96	Final
SVO-28	Sulfuric Acid Cleanup	2	8/96	Final
SVO-29	Total Petroleum Hydrocarbons as Diesel (Cal. Method.)	1	2/94	**Archived**
SVO-30	Diesel Range Organics	2	2/94	**Archived**
SVO-31	Analysis of Organophosphorus Pesticides	0	2/94	**Archived**
SVO-32	Analysis of Chlorinated Herbicides	3	1/10/02	Final
SVO-33	Analysis of Toxaphene	3	6/99	Final
SVO-34	Analysis of PCBs	1	2/94	**Archived**
SVO-35	Analysis of Organochlorine Pesticides and PCBs	4	12/97	**Archived**
SVO-36	Analysis of Organochlorine Pesticides and PCBs CLP Protocol	2	8/96	Final
SVO-37	Analysis of BNA Compounds	10	1/10/02	Final

	by GC/MS			
SVO-38	Analysis of BNA Compounds by GC/MS CLP Protocol	0	2/94	Final
SVO-39	Extraction of Soil Samples for PAHs by HPLC	0	5/96	Final
SVO-40	Extraction of Water Samples for PAHs by HPLC	0	5/96	Final
SVO-41	Analysis of Polynuclear Aromatic Hydrocarbons (PAH)	2	12/97	Final
SVO-42	Herbicides in Soil Extraction	2	1/9/02	Final
SVO-43	Glassware Cleaning	2	12/98	Final
SVO-44	Prevention of Cross Contamination and Prescreening of Solvents	0	3/97	Final
SVO-45	Extraction of PCB Wipe Samples	1	4/00	Final
SVO-46	Benzene Analysis by FID			**Archived**
SVO-47	Analysis of Water Samples for Methanol	0	9/96	Final
SVO-48	Open			
SVO-49	Analysis of PAH Method 610	2	6/00	Final
SVO-50	Determination of Nitroglycerin in Soil/Sediment by HPLC	0	8/97	Final
SVO-51	Analysis of Organochlorine Pesticides by GC	5	6/00	Final
SVO-52	Analysis of Polychlorinated Biphenyls (PCBs) by GC	3	1/00	Final
SVO-53	Sonic Probe Use and Maint.	1	6/99	Final
SVO-54	Extraction of Neutrogena Coal Tar Based Samples for PAH.	1	3/99	Final
SVO-55	Extraction of Neutrogena Coal Tar Based Samples for Benzo(a)Pyrene.	0	3/99	Final
SVO-56	ASE	0	7/99	**Archived**
SVO-57	Florisil Column Cleanup for PCB's	0	4/99	Final
SVO-58	Silica Gel Cleanup and Separation of Pesticides and PCB's.	0	4/99	Final

SVO-59	Determination of Lipids in Tissues, Fats, and Plants.	0	4/99	Final
SVO-60	Extraction of Biological Samples for Organochlorine Pesticides/PCB's	1	7/00	Final
SVO-61	Extraction of Biological Samples for PAH's	1	2/00	Final
SVO-62	Congener specific analysis of PCB in Tissue	2	10/31/01	Final
SVO-63	Analysis of PAH in Soil, Water and Biota by GC/MS-SIM	2	12/00	Final
SVO-64	Congener specific analysis of PCB in Soils and Sediments	2	11/05/01	Final
SVO-65	Congener specific analysis of PCB in Water	1	11/05/01	Final
SVO-66	Extraction of Biological Samples for PAH's by GC/MS-SIM	0	4/01	Final
SVO-67	Extraction of Soil Samples for PAH's by GC/MS-SIM	2	4/01	Final
SVO-68	Determination of N-Methyl Carbamates and N-Methyl Carbamoyl Oximes in Water	0	5/00	Final
SVO-69	Nitroaromatics and Nitramines in Soil/Sediments by HPLC	1	1/10/02	Final
SVO-70	Extraction of Biota Samples for Base/Neutral/Acids	0	7/00	Final
SVO-71	Nitroaromatics and Nitramines in Water by HPLC	1	1/10/02	Final
SVO-72	Generation of Diazomethane from Diazald	0	8/00	Final
SVO-73	Analysis of Semivolatile (BNA) Compounds by GC/MS in Biological Matrices	0	8/00	Final
SVO-74	Extraction of Water Samples for Pentachlorophenol by GC/MS-SIM	0	11/00	Final
SVO-75	Analysis of Pentachlorophenol in Water by GC/MS-SIM HP-5973	0	11/00	Final
SVO-76	Extraction of Water Samples for PAH's by GC/MS-SIM	0	4/01	Final

En Chem - Madison	Title	Control		
SOP #	Volatile Organics (VOA)	Rev #	Date	Status
VOA-1	Storage Blank Preparation and Analysis	0	8/97	Final
VOA-2	Closed			
VOA-3	Prep. of VOA Stock and Working Standards	1	3/95	**Archived**
VOA-4	Analysis of Volatile Organics by ELCD/PID GC	1	8/94	**Archived**
VOA-5	Volatile Organics Analysis by GC/MS 8260	9	1/10/02	Final
VOA-5 Addendum	Prep & Analysis of Methanol Extracted Vegetable Oil	0	10/23/01	Final
VOA-6	Low Level VOA by GC/MS Method 524.2	1	8/94	Final
VOA-7	VOA GC/MS Report Submission	1	2/95	**Archived**
VOA-8	IOP for VOA GC/MS	1	3/95	Final
VOA-9	Volatile Organics Analysis of Solid Matricies Methods 5035/8260B	3	1/10/02	Final
VOA-10	Glassware Cleaning Procedure	0	7/98	Final
VOA-11	Volatile Organics Analysis by GC/MS Method 624	0	6/00	Final
VOA-12	Analysis of Low Concentration Water for Purgeable VOCs	0	10/16/01	Final

WCM-1	Total Suspended Solids Dried at 103-105°C Volatile Solids Ignited at 550°C	9	12/19/01	FINAL
WCM-2	Total Organic Carbon (TOC) in Water	9	4/99	FINAL
WCM-3	Phenolics, Total Recoverable Distillation	3	4/00	FINAL
WCM-4	Oil & Grease, Total Recoverable, Gravimetric Separatory Funnel Extraction	2	8/99	FINAL
WCM-5	Chemical Oxygen Demand Open Reflux Method Mid Level	4	8/96	**Archived**
WCM-6	OPEN			
WCM-7	Nitrogen, Ammonia, Colorimetric, Distillation	2	3/94	**Archived 10/97**
WCM-8	Phenolics, Total Recoverable Automated Analysis	7	1/01	FINAL
WCM-9	Total Organic Carbon Analysis in Soils, Sludge, and Solid Waste	12	8/3/01	FINAL
WCM-10	Total Solids Dried at 103-105°C; Volatile Solids Ignited at 550°C	4	4/00	FINAL
WCM-11	Total Dissolved Solids Dried at 180°C; Volatile Solids Ignited at 550°C	4	8/99	FINAL
WCM-12	Alkalinity, Titrimetric, pH 4.5	5	8/96	**Archived**
WCM-13	Alkalinity, Titrimetric, pH 8.3 & 4.5	5	10/00	FINAL
WCM-14	Iodide Analysis, Titrimetric	2	8/96	**Archived 12/97**
WCM-15	Bromide Analysis, Titrimetric	1	8/96	**Archived 12/97**
WCM-16	Acidity, Titrimetric	2	8/99	FINAL
WCM-17	Conductivity	5	8/99	FINAL
WCM-18	TOC Analyzer	5	4/99	FINAL
WCM-19	Chloride, Automated Analysis	7	1/01	FINAL
WCM-20	Sulfate	6	1/01	FINAL
WCM-21	Sulfide-Water	4	7/99	FINAL
WCM-22	Sulfides Titrimetric-Soil	4	7/99	FINAL
WCM-23	Total Cyanide, Automated Analysis	7	11/00	FINAL
WCM-24	Turbidity	3	8/99	FINAL
WCM-25	Nitrogen, Ammonia, Distillation Procedure	6	1/01	FINAL
WCM-26	TKN, Colorimetric	2	8/96	**Archived 12/97**
WCM-27	UV-Vis Single Beam	2	8/96	**Archived**

	Spectrophotometer			**12/97**
WCM-28	Total Alkalinity Automated Analysis	6	1/01	FINAL
WCM-29	Automated Ion Analyzer System	5	3/00	FINAL
WCM-30	Cyanide Distillation Aqueous and Compositional	1	9/97	**Archived 10/97**
WCM-31	Reactive Cyanide and Sulfide, Preparation	4	4/00	FINAL
WCM-32	Chemical Oxygen Demand Open Reflux Method Low Level	4	8/96	**Archived**
WCM-33	Nitrate-Nitrite Automated Analysis	7	1/01	FINAL
WCM-34	Cyanide, Weak and Dissociable Distillation	1	7/99	FINAL
WCM-35	Cyanide Amenable to Chlorination- Distillation	2	7/99	FINAL
WCM-36	Nitrogen- Nitrite Automated Analysis	4	1/01	FINAL
WCM-37	Midi-Dist Cyanide Distillation	4	11/00	FINAL
WCM-38	Color	1	8/99	FINAL
WCM-39	COD - Colorimetric Manual (Vial Low)	5	10/00	FINAL
WCM-40	COD - Colorimetric Manual (Vial Mid)	4	4/00	FINAL
WCM-41	Oil and Grease, Total Recoverable, Compositional	4	3/00	FINAL
WCM-42	Fluoride by Ion Selective Electrode - Aqueous	9	12/28/01	FINAL
WCM-43	Fluoride by Ion Selective Electrode - Soils	4	8/99	FINAL
WCM-44	Phosphorus, All Forms Automated Analysis	5	3/00	FINAL
WCM-45	Flashpoint	2	8/99	FINAL
WCM-46	Paint Filter Liquids Test	2	8/99	FINAL
WCM-47	Specific Gravity	2	3/00	FINAL
WCM-48	Ferrous Iron	2	1/01	FINAL
WCM-49	Nitrogen Ammonia Ion Selective Electrode	1	8/99	FINAL
WCM-50	Bromide, Automated Analysis	1	8/99	FINAL
WCM-51	Biochemical Oxygen Demand	1	1/01	FINAL
WCM-52	Total Kjeldahl Nitrogen, I.S.E.	1	7/99	**Archived**
WCM-53	Turbidimetric Sulfate	1	8/99	FINAL
WCM-54	pH Analysis	1	8/99	FINAL
WCM-55	Settleable Solids	1	8/99	FINAL
WCM-56	Oxidation Reduction Potential- Eh	1	8/99	FINAL
WCM-57	Free Acidity, Titrimetric	1	8/99	FINAL

En Chem - Madison	Title	Control		
SOP #	WET CHEMISTRY (WCM)	Rev. #	DATE	Status
WCM-58	Ammonia Nitrogen- Automated Analysis	4	1/01	FINAL
WCM-59	Ion Chromatography - IOP	2	3/00	FINAL
WCM-60	Anions by Ion Chromatography	6	12/27/01	FINAL
WCM-61	Chromium, Hexavalent-Colorimetric	1	1/01	FINAL
WCM-62	Alkaline Extraction of Hexavalent Chromium	2	4/01	FINAL
WCM-63	AVS and SEM in Sediment	1	4/00	FINAL
WCM-64	Total Kjeldahl Nitrogen	2	1/01	FINAL
WCM-65	Thiocyanate Determination	2	10/00	FINAL
WCM-66	Particle Size Reduction	0	9/00	FINAL
WCM-67	Oil & Grease, SPE	0	7/23/01	FINAL
WCM-68	O&G SPE-DEX 4790 System	0		**Draft**
WCM-69	Apollo 9000 IOP	1	8/3/01	FINAL
WCM-70	TOC Water by Appolo 9000	1	8/3/01	FINAL
WCM-71	Preservation of Aqueous Samples for Low Level Mercury	0	8/01	FINAL
WCM-72	Cold-Vapor Atomic Fluorescence Spectrometry Mercury Analysis	2	11/30/01	FINAL

APPENDIX K

METHOD REFERENCES

En Chem, Inc. Method References

1. Federal Register, Volume 44, No. 223, December 3, 1979, 40 CFR Part 136, pp. 69464 to 69575.

2. "Guidelines Establishing Test Procedures for the Analysis of Pollutants under the Clean Water Act," CFR Part 136, October 26, 1984.

3. "Methods for Chemical Analysis of Water and Wastes," EPA 600/4-79-020, U.S. Environmental Protection Agency, March 1979.

4. "Test Methods for Evaluating Solid Waste, Physical/Chemical Methods," SW-846, USEPA, (3rd Edition).

5. Standard Methods for the Examination of Water and Wastewater, 18th ed., American Public Health Association.

6. "The Analysis of Aromatic Chemicals in Water by the Purge and Trap Method," Method 503.1, U.S. Environmental Protection Agency, Physical and Chemical Methods Branch, Cincinnati, Ohio, May 1980.

7. "Evaluation of Selected Lipid Methods for Normalizing Pollutant Bioaccumulation", Environmental Toxicology and Chemistry, Volume 10, 1992

8. "Official Methods of Analysis of the Association of Official Analytical Chemists," Methods Manual, 17th ed.

9. "Methods for Benzidine, Chlorinated Organic Compounds, Pentachlorophenol, and Pesticides in Water and Wastewater," Environmental Monitoring and Support Laboratory, U.S. Environmental Protection Agency, Cincinnati, Ohio, September 1978.

10. "Annual Book of ASTM Standards, Sections 11.01 and 11.02, Water and Environmental Technology," American Society for Testing and Materials.

12. The Determination of Polychlorinated Biphenyls in Transformer Fluid and Waste Oils," Physical and Chemical Methods Branch, Environmental Monitoring and Support Laboratory, USEPA, Cincinnati, Ohio, April 1981.

13. "Interim Methods for the Sampling and Analysis of Priority Pollutants in Sediments and Fish Tissue," Physical and Chemical Methods Branch, Environmental Monitoring and Support Laboratory, USEPA, Cincinnati, Ohio, (April 1981).

14. Manual of Analytical Methods for Analysis of Pesticides in Human and Environmental Samples, USEPA, EPA 600/8-80-038 (June).

15. USEPA Contract Laboratory Program Statements of Work (CLP-SOW) OLM01.8, OLM03.1, and ILM04.0

STANDARD OPERATING PROCEDURE

TITLE: Sample Receipt and Log-in

DEPARTMENT: Receiving

PROCEDURE SUMMARY:

During normal business hours samples are submitted to the laboratory via several modes of transport. Receipt and log in functions document the acceptance of the samples by the lab and condition of those samples.

REVIEWED BY: Gloria Doxtator — 12/10/98
Gloria Doxtator
sample Receiving Supervisor
Date

M. Suha — 121098
M. Suha
Quality Assurance Officer
Date

APPROVED BY: Nils Melberg — 12/10/98
Nils K. Melberg*
Laboratory Manager
Date

PROCEDURE:

1. Receiving Access and Custody

1.1. Access to the laboratory is monitored. The front entrance is open between 8 am and 5 p.m. Except for the front entrance, outside doors to the laboratory are kept locked. Visitors sign a visitor's log by the front entrance and are escorted by En Chem personnel while in the laboratory. All laboratory personnel are to question anyone in a secured area without a visitor's badge and not with recognizable En Chem personnel.

1.2. Samples are either received directly from the client, via En Chem's couriers, or from commercial courier services such as UPS, Federal Express, Airborne Express, and others. Samples are brought through a shipping/receiving area. Only packages addressed to En Chem are received.

1.3. Custody of samples between the sampling event and En Chem is maintained through a Chain of Custody (COC), a written record of sample bottle possession

* F:\SOP\1\REC\G1-REC-7.DOC

and transfer (see SOP G1-REC-8). This form information includes client information, project information, sample descriptions, field ID's, sample collection dates and times, analyses requested, filtering information, bottle preservation codes, matrix type, and a record of when and by whom the samples were relinquished and received. If any items received by the laboratory are not in conformance with what the client wrote on the COC, complete a Sample Entry NonConformance Report (see SOP G1-REC-5).

2. Sample Receipt :Several steps are taken immediately upon receipt of the package.

2.1. Open the package, remove the paperwork, and check to see if the samples have been received on ice.

2.1.1. If ice is present, write "iced" on the COC under "Sample Receipt Temp". If the project is not from Wisconsin a temperature of the melt water or temperature blank must be recorded.

2.1.2. If the ice has melted or is absent, take the temperature of the samples.

2.1.2.1. Write "Not iced" and record the temperature on the COC.

2.1.2.2. Use the thermometers located in Sample Entry to take the temperature of the temperature blank bottle included with the shipment. This represents the temperature of the samples.

2.1.2.3. The requirement for cooling is 4°C. If the temperature reading is higher than 4°C, write a NonConformance memo documenting the problem.

2.1.2.4. If there is no temperature blank, then either take the temperature of the melt water in the cooler or alternatively, of an unpreserved water sample, taking care to avoid cross-contamination of the samples.

2.1.2.5. If it is not possible to take the temperature, simply write "Not iced" on the COC and NonConformance the problem.

2.2. Remove the shipping airbill/ tracking number from the outside of the package and affix it to a plain white sheet of paper.

2.2.1. Clip this paper to the COC.

2.2.2. Mark the project name on the package.

2.3. Officially take custody of the package by signing the COC.

2.3.1. If the En Chem courier or the client delivered the samples, have them sign the COC in the space marked "Relinquished By."

2.3.2. If the samples came via a commercial courier service, sign the COC for the courier including the date and time it was delivered under "Relinquished By."

2.3.3. Sign your name and the time and date of sample receipt in the "Received By" space on the COC.

2.4. Check for notes specific to the project. These may have been e-mailed to the sample entry group by members of Customer Services. If in doubt check with the Project Managers.

2.4.1. If one is present, attach it to the COC.
2.4.2. If a scope is not present or if a problem exists between the notes and the COC, notify someone customer support.
2.4.3 Fill out the cooler recipt log relating to reciept activities.

3. Sample Log-in

3.1. Beginning with projects which have a quick turn-around time or samples with a short hold time, unpack the samples and arrange them on the receiving counters in the order given on the COC.

3.2. Verify the cooler contents against what is written on the COC.

3.2.1. Record any discrepancies in the Comments section of the COC and document in a NonConformance memo.

3.2.2. Record the total number of bottles received for each station ID in the shaded area of the COC.

3.3. Note if any samples are in poor condition (e.g. broken bottles, cracked caps, mislabeling, wrong container type for analysis to be run, etc.). Record this information in the Comments section of the COC for each affected station ID and document in a NonConformance memo.

3.3.1. Replace any cracked caps with new ones. Note in the comments section of the COC whether it appears that any sample has leaked out or the melt water has leaked in the sample.

3.4. Check all water volatile samples and zero headspce collected soil volatile samples for headspace.

3.4.1. Stand water samples on end to see if there are any air bubbles in the vial. Water samples may not have bubbles which exceed 6 mm in diameter. (About the size of a person's pinky fingernail)

3.4.1.1. If bubbles exceeding 6 mm are present in all the volatile bottles for a given station ID, write "Headspace" in the Comments section of the COC and document in a NonConformance memo.

3.4.1.2. If the bubbles do not exceed 6 mm in one or more of the bottles, write "Bubbles" in the Comments section of the COC.

3.4.2. Soil samples should be in appropriate bottles (60 mL or 125 mL jars with Teflon-lined caps) with as little space in them as possible. Document conditions other than these (i.e. jar half filled with coring sample), but do not flag as "Headspace."

3.5. If a set of trip blanks was sent for a project containing samples for volatile analysis, and if the sampler has not already done so, write "Trip Blank" in the next available station ID space on the COC and record the total number of trip blank vials received.

3.6. For any projects for SDWA (Safe Drinking Water Act) or any low level detection volatile analysis, check with Customer Services for appropriate subcontractor.

3.7. Except for those samples requiring no headspace (i.e. volatile samples), check the pH of any preserved samples with pH indicator paper.

3.7.1. If the pH of an acid preserved sample is greater than 2, add the appropriate preservative to the sample until the pH is less than or equal to 2.

3.7.1.1. Use the same preservatives that are used in bottle preparation (see SOP G1-REC-3).

3.7.1.2. Document the issue and resolution (include the amount of acid needed) in a NonConformance memo.

3.7.1.3. Write "Adjusted" under Sample Receipt pH on the COC.

3.7.2. If the pH of a sample preserved with a base is less than 12, then add the appropriate base to the sample until the pH is greater than or equal to 12, and document as in 3.7.1.1 in through 3.7.1.3.

3.7.3. If none of the samples require pH adjusting, write "Acceptable" under Sample Receipt pH on the COC.

3.8. Check the collection dates and times to make sure that the requested analyses are still within their hold times. Use the sampling guides or the bottle request forms located in the bottle prep areas.

3.8.1. Contact the appropriate analyst about any samples with a short hold time.

3.8.2. If a sample's hold time has expired, or if the hold time is near its expiration time, document this in a NonConformance memo. Immediate attention is needed therefore contact Customer Services as soon as possible

3.9. Check to make sure there is enough volume for each station ID.

3.9.1. Check the number of bottles, the preservation, and the volume for the analyses listed on the COC. Use the volumes given on sampling guides or the bottle request forms located in the bottle prep areas.

3.9.2. If there is not enough volume to perform all of the requested analyses, contact the group leader of the lab which does that analysis or Customer Services to see if the analyses can still be performed and/or what analyses the client wishes to prioritize. Record any volume issues in a NonConformance.

3.10. If there are any samples with a quick turn-around time, notify the appropriate group supervisor. Client Services issues a daily list of expected QTA's. If an unexpected QTA arrives, notify a project manager immediately to resolve to due date.

3.11. Assign the laboratory numbers to the samples for a project receipt.

3.11.1. Assign the next consecutive batch number in the pink/project book computerized program. Print out the Laboratory Tracking Sheet.

3.11.2. Document the date of log-in, the project name and number, the matrix and due date in pink/project book computerized program.

3.11.3. Write the batch number in the "En Chem Project No." Box on the COC.

3.11.4. Document each Laboratory Information Management System (LIMS) number, sequentially numbering each Sample Description / Field ID on the COC as -001, -002, -003, etc. in the order listed on the COC in the space designated "Laboratory Number".

3.11.5. Note: Be sure that samples of different matrices with the same field ID are given separate LIMS numbers. This also applies to charcoal tubes (front/back) and samples requesting total and dissolved metals.

3.12. The COC Comments section for each entry is for recording any unusual aspects (e.g. bottle types, labeling issues etc.).

3.13. Numbering the samples.

3.13.1. Line up the sample bottles by Sample Description / Field ID, the same way as listed on the COC, before numbering the samples.

3.13.2. Generate the labels computerized label printing system. (See SOPG1-REC-6)

3.14. QC The Samples: A person not involved with the numbering process for that particular project verifies the correct numbering / labeling of the sample bottles (matches the COC)

3.14.1. Initial the COC to indicate that the samples have been QC'd.

Example: ✓mcs 10/27/98

3.15. Put the samples into their respective storage locations by analytical requested.

3.15.1. If this project is a quick turn, e-mail the appropriate analytical personnel to alert them of the arrival or alert them as requested by specific project instructions from Customer Services

3.16. Assemble all paperwork into a project file. At a minimum, the completed project file consists of several items:

3.16.1. The COC.

3.16.2. Any NonConformance Reports.

3.16.3. The Cooler Reciept Log.

3.16.4. The airbill or tracking number from the package.

3.16.5. Any subcontracting COC paperwork.

3.16.6. Any other documentation associated with the project or receipt of these samples.

4. Repeat the process described until all projects received have been logged in.

TITLE: Policy for Sample Transfer from Green Bay to Kimberly

DEPARTMENT: Receiving

PROCEDURE SUMMARY:

In the absence of Project Specific directives, samples are transferred from the Enchem Green Bay facility to Enchem Kimberly facility utilizing a sample transfer record.

REVIEWED BY: _____ 2/13/03
Laura ~~Lanua~~ Ikauniece — Date
Li 2/13/03
Sample Receiving Supervisor

M. Suha — 13-Feb-03
M. Suha — Date
Quality Assurance Officer

APPROVED BY: _____ 2/13/03
Nils K. Melberg** — Date
Laboratory Manager

PROCEDURE:

1. Receiving Access and Custody

1.1. Access to the laboratory is monitored. The front entrance is open between 8 am and 5 p.m. Except for the front entrance, outside doors to the laboratory are kept locked. Visitors sign a visitor's log by the front entrance and are escorted by En Chem personnel while in the laboratory. All laboratory personnel are to question anyone in a secured area without a visitor's badge and not with recognizable En Chem personnel.

1.2. Custody of samples between the facilities is documented by a sample transfer record. This form information includes client information, En Chem lab number, analyses requested, bottle type, matrix type, and a record of when and by whom the samples were relinquished and received.

** Q:\SOP\1\REC\G1-REC-10

2. Sample Transfer: Several steps are taken in the sample transfer process.

2.1. Pack the samples in a cooler with an appropriate amount of packing material and ice(if required).

2.1.1. Fill out the Sample Transfer record. Fill out the following fields: Client, Lab number, analysis requested and bottles.

2.1.2. Relinquish the samples to the person transporting them.

2.1.3. The samples are transported to the Kimberly facility. The samples are relinquished to the sample custodian in Kimberly.

Standard Operating Procedure

TITLE: Volatile Organic Analysis by GC/MS - Methods 5030B/8260B

DEPARTMENT: Volatile Organics Laboratory

APPLICATION: The method outlined within is used for the detection of volatile organic compounds by GC/MS in waters and methanol extracted soils. See the accompanying Target Compound List (TCL) for the analytes to which this method applies.

REFERENCES: 40 CFR, Part 136, Appendix B, Revision 1.11

USEPA Test Methods for Evaluating Solid Waste SW-846, Method 8260B, Revision 2, December 1996

USEPA Test Methods for Evaluating Solid Waste SW-846, Methods 5030B, Revision 2, December 1996

PROCEDURE SUMMARY:

Volatile compounds are purged out of water or medium level extracted solid matrices using a steady stream of helium. The compounds are trapped on an adsorbent trap, which is then heated rapidly, desorbing the compounds onto a GC/MS system. Separation occurs on a capillary column before entering the mass spectrometer, where spectra are generated that can be compared with previously prepared standard spectra. Quantitation is based upon analyte response versus standard response relative to internal standards.

REVIEWED BY: Julie A. Trivedi — 1/10/2002
Julie A. Trivedi, Quality Assurance Officer — Date

Sheila Neuzil Butzow — 1-10-02
Sheila Neuzil-Butzow, Volatile Organics Supervisor — Date

APPROVED BY: Glen A. Coder — 1/10/2002
Glen A. Coder, Laboratory Manager — Date

Annual Review

Date:						
Initials:						

SAMPLE HANDLING AND PRESERVATION:

Water samples must be preserved with 1:1 HCl to pH <2. All samples must be stored at 4°C until analysis. Before using samples, ensure that no bubbles are found in the water samples. The sample must be flagged as having headspace if there is a bubble greater than 0.6 cm in diameter.

Samples preserved with HCl acid must be analyzed within 14 days of sampling. Unpreserved samples must be analyzed within 7 days of sampling.

INTERFERENCES:

1) Masking:
This occurs when a compound is present at such a high concentration that its peak is broad enough to cover peaks with similar retention times.

2) Matrix Dampening:
This occurs when the sample, usually a soil, contains substances that impede the purging of volatiles out of the sample or contains high concentration of total organic carbon (TOC). This effect causes low internal standard areas and/or poor surrogate recovery.

3) Foaming:
Samples may foam during sample purging due to soaps, and surfactants. This foam will damage the sample concentrator and potentially the GC/MS. If foaming is observed during sample prep, the sample will be diluted to reduce the risk of damaging the analytical system

INITIAL DEMONSTRATION OF PROFICIENCY:

Each chemist must demonstrate initial proficiency with this method by generating acceptable accuracy and precision data in a clean matrix fortified with the target analytes. To validate the method the chemist must analyze four replicates of a QC check standard. The QC check standard is prepared from second source standards independent from the standards utilized to prepare the calibration curve. The average percent recovery (%R) should be within 70-130% and the relative standard deviation (%RSD) should be less than 20%. Compounds that are known to be poor purgers will be allowed lower recoveries.

APPARATUS AND MATERIALS:

GC/MS- HP 5970, 5971, 5972 or 5973 MSD, or equivalent with Capillary Direct inlet. Integrated data system capable of scanning 35-300amu at 1 sec/scan.

Tekmar 3000 Concentrator

Archon 5100A autosampler or Varion Archon autosampler

Dynatec PTA-30 Autosampler

Capillary Gas Chromatography column - 20m x 0.18mm ID RTX-624 megabore (Restek, Inc.), with a 3µm film thickness; **OR** 40m X 0.18mm ID DB-624 (Restek, Inc.), with a 1.0 um film thickness.

Syringes - 5 ml Hamilton gastight with Luer-Lock tip; 5, 10, 25, 50, 100, 250, 500, 1000 µL gastight microsyringes, 10, 25, 50 mL gastight syringes; 50, 100, 500ml Class A volumetric flasks.

Standard solution storage containers - 1.5mL, 7mL, 14mL amber vials with PTFE-lined screw caps; 2 ml micro reaction vials with miniert valves and replaceable septa (Supelco).

REAGENTS:

Gases:	Helium, UHP grade
Methanol:	Burdick & Jackson Purge-and-Trap Grade or equivalent
Organic Free Water (OFW):	Organic Free Water is water with organics present below MDL for most compounds. (See IV. C.: 'Method Blank Criteria'.)

Standards: The following standards or their equivalents may be used:

Primary Standard Sources:

Restek VOC Mixes (Custom and standard stock mixes). See Table 5.
Restek Internal Standard Mix.
Restek Surrogate Standard Mix.
Restek 4-Bromofluorobenzene Solution.

Secondary Standard Sources:

Supelco Purgeable Kit Mixes.
Accu-standard Custom Kit Mixes

PROCEDURE:

Chromatographic Conditions:

General:

Injector temperature:	220°C
Transfer line temperature:	280°C

Column:

Carrier gas (He) flow rate:	0.5 mL/min

Temperature program:

Initial temperature:	35°C and hold for 2 minutes
Ramp:	8°C/min. to 180°C.
Final temperature:	Hold at 180°C for 3 min.

Purge and Trap Conditions:

General:

Purge:	11 minutes
Desorb:	2 minutes
Bake:	4 minutes

All temperature zones are set to 220°C

These are typical analytical conditions. The actual conditions used at the time of analysis may be different to allow for system optimization.

INITIAL CALIBRATION:

Demonstration and documentation of an acceptable initial calibration is required before any samples are analyzed. Recalibration may need to be performed as indicated by results of continuing calibration check standards.

1. Verification of Instrument Performance

A 50ng BFB injection or purge must meet spectral criteria as defined in SW846 8260B or CLP OLM3.1* criteria, depending on project scope requirements (see Appendix C, Tables 1 & 2). If the tune spectrum does not meet the criteria after several injections, then the instrument may need to be retuned. The instrument must meet the BFB criteria before proceeding with the standard calibration.

* Note that OLM3.1 criteria is based on three scans and a background subtraction.

2. Preparation of Standards

Stock standards have an expiration date assigned by the manufacturer. This date is valid until the vial is opened. Once opened, non-gas compounds have a one-month holding time. Stock standards containing gas compounds have a holding time of one week once opened. All secondary standards (any standard diluted from a stock standard) have a one week holding time. All opened stock and secondary standards must be stored in a freezer at -15°C. Standards should be replaced if it is determined that they have deteriorated.

3. Stock Reference Standards

Stock standards may be prepared from neat standards and/or prepared mixes can be purchased. (See Appendix B for the Target Compound List.) A reference standard prepared from a neat standard is made up at a 10,000µg/mL concentration as follows:

Place about 9.8 ml of methanol into a 10mL ground-glass stoppered volumetric flask. Allow the flask to stand unstoppered until all alcohol-wetted surfaces have dried and weigh to the nearest 0.1mg. Using a 100µL gastight syringe, add about 20-25 drops of the neat standard to the flask to obtain about 100mg of standard. Let the drops fall just above the surface of the methanol but do not let the syringe needle touch the sides of the flask neck.

Reweigh the flask, dilute to volume, stopper, then mix by inverting the flask several times. Store without headspace in a 7mL amber vial in a freezer. All data regarding standard

preparation must be entered into the standard preparation logbook. A number is assigned to each prepared standard solution and that number is entered on all logs where a solution is used. The vial containing a prepared standard solution must be labeled in accordance with the En Chem SOP, and include the assigned log number. A brief description of the standard must also appear on the label.

4. Working Standards

Prepare working standards of both the volatile target compounds and surrogates at 100µg/mL in P&T methanol. Prepare an Internal Standard and an Internal Standard/Surrogate solution (ISSTD) at a concentration of approximately 250µg/mL in P&T methanol. Record all data regarding preparation of each standard solution in the standard logbook as described above for stock standards. Label the working standard vials as described above for the stock standards. All standards should be stored in a freezer.

5. Preparation of Calibration Standards

An initial calibration consisting of at least five calibration points (six points are needed for quadratic regressions) is analyzed before sample analysis may proceed. The calibration levels are prepared with a 100ug/L working standard as follows:

Cal Level	Amt of working standards (uL)	Volumetric
1	1 µL	100 mL
5	5 µL	100 mL
10	10 µL	100 mL
20	10 µL	50 mL
50	25 µL	50 mL
100	50 µL	50 mL
150	75 µL	50 mL
200	100 µL	50 mL

The associated volumetric is inverted three times and the contents placed into a non-preserved, 40mL VOA vial, without headspace, for instrument analysis. The autosampler adds sufficient Internal Standard mix to a 5mL aliquot to result in a final ISTD concentration of 50µg/L. This concentration is the same for all standards, blanks, and associated QC analyses.

A calibration curve for waters and medium level soil methanol extracts is purged at ambient temperature. Analyze these solutions using purge-and-trap and GC/MS methodology.

6. Preparation of Calibration File

Identify the compounds using reference spectra and retention time data. Assign response factors to each compound using the internal standard technique based on its response in each standard. Refer to the formula sheet for the response factor formula in Appendix A, #1. See Appendix B for the assigned internal standard for each analyte.

Check linearity of response by calculating the percent relative standard deviation (RSD) of the response factors for each compound. The % RSD for each individual Calibration Check

Compound (CCC) must be less than or equal to 30.0%. In addition, the minimum acceptable average response factor for System Performance Check Compounds (SPCC) must meet specified Response Factor (RF) criteria. (See Appendix C, Table 3 for lists of CCC and SPCC compounds.)

The validity of the calibration is accepted or rejected after making these comparisons. Some common causes of a bad calibration curve are: standard degradation, poor instrument stability or improper purge flow rate.

Any target analyte with an RSD of less than 15% is considered valid and the average response factor may be used for quantitation purposes. If the %RSD exceeds 15%, the analyst must choose the best calibration option for quantitation purposes. Linear regression, quadratic regression, and third order polynomial are the other options that may be used for analyte quantitation. It is not the intent to allow non-linear calibration to be used to compensate for detector saturation at higher concentration or to avoid proper instrument maintenance. When the linear model is used, the correlation coefficient must be greater than or equal to 0.99.

South Carolina requires the use of a linear calibration model. Either the %RSD is less than 15% and the average RF is used for quantitation or a linear regression with a correlation coefficient greater than or equal to 0.99 must be used for all analytes listed in SW 846 Method 8260B. Any single point within the calibration curve may be re-run if it appears there was a problem with the injection. Since a calibration curve generally consists of 8 different calibration standards, some of the responses from the upper end of the curve do not need to be included to reduce the data. At least 5 standards must be used to generate the calibration curve. Dilutions must be performed if the concentration of an analyte exceeds the concentration of the highest calibration standard in the curve used to quantify the sample.

In order to consider the initial calibration acceptable, an Initial Calibration Verification Standard (ICV) must be analyzed before samples analysis, preferably within the same time clock as the calibration curve. The ICV standard must be from a second source stock and meet the same criteria as the Continuing Calibration Verification (CCV) standard before the initial calibration may be considered valid.

If the calibration is not acceptable, the appropriate calibration solution(s) is reanalyzed to obtain acceptable % RSD and RFs over the entire calibration range.

DAILY CHECKS AND CONTINUING CALIBRATION CHECK:

A BFB tune, continuing calibration check standard, method blank, and LCS/LCSD must be performed at the beginning of each 12 hour period during which sample analyses are performed.

1. Daily BFB Tune

To check the tune, follow the procedure in the INITIAL CALIBRATION: Verification of Instrument Performance. If the tune has failed, consider modifying the tune file again as described above. If the BFB or the autotune fails repeatedly, source cleaning may be necessary. The BFB tune must meet the spectrum criteria as defined in Appendix C, Table 1, before proceeding with the continuing calibration check standard.

2. Continuing Calibration Check Standard

Prepare a 50µg/L standard by adding 25µL of the target compound working standard at 100µg/mL into a 50mL volumetric of organic free water. The autosampler will then add ISSTD mix to the 5mL aliquot. Compare the daily response factors with the average response factors from the initial calibration. The relative retention time for each analyte must be within ± 0.06 RRT units of the RRT established in the initial calibration.

The retention time for each internal standard must be within ±30 seconds of the retention in the mid-level standard from the associated initial calibration. The internal standard area response must be within a factor of two (-50%-+100%) of the corresponding internal standard area response in the mid-level standard from the associated initial calibration.

The percent difference for any CCC compound may not be greater than 20.0%. Some target analytes, such as the Ketones, have extremely poor purging efficiencies and may have a higher relative percent difference. If any non-CCC compounds have a percent difference greater than 20.0%, analyst discretion is used before sample analysis occurs.

The daily response factor of any SPCC compound must be within the criteria (as listed in Appendix C, Table 3). Check the validity of the ID file's qualitative matches. If the SPCC or CCC conditions are not met, the standard is not valid and must be reanalyzed to ensure it was not a purge problem. If the second analysis fails, corrective action, maintenance, and/or recalibration are required.

3. Method Blank

A method blank consists of organic free water. The method blank is analyzed in the exact manner that the samples are analyzed. In addition to the internal standard and surrogate QA/QC requirements of sample analysis, the method blank <u>must</u> meet the following criteria before sample analysis may begin: The results of the method blank <u>must</u> be (a.) less than the laboratory's reporting limit (see Appendix B), (b.) less than 5% of the regulatory limit associated with an analyte, or (c.) less than 5% of the sample result for the same analyte, whichever is greater. If the blank contains contamination, the source must be located and eliminated. Non-target compound peaks with areas greater than 10% of the area of the nearest internal standard, other than surrogates, must not be present in the chromatogram if tentatively identified compounds (TICS) are requested.

4. Laboratory Control Sample

A laboratory control sample (LCS) and laboratory control duplicate (LCSD) are performed within every 12 hr. analytical clock to check for instrument accuracy and precision. Prepare a 50µg/L LCS by adding 25µL of the second source spike calibration mix at 100µg/mL into a 50mL volumetric. Invert the volumetric three times slowly and pour contents into a 40mL non-preserved VOA vial. Place on the autosampler. The autosampler then adds ISSTD mix to achieve a final concentration of 50 µg/L .

The LCS is used to verify method performance in the event of poor recoveries in the Matrix Spike or Matrix Spike Duplicate. A LCS for all compounds may be required based on project requirements and scope. If a LCS with all target analytes is requested, a LCSD may not be analyzed. The spiking solution used for the full spike LCS is the same used for

the MS/MSD. **For samples from the State of South Carolina, the LCS recoveries must be within 70-130% of the true value for analytes listed in SW 846 Method 8260B.**

5. Blank Spike/Blank Spike Duplicate

A blank spike (BS) /blank spike duplicate (BSD) will be used for QC control in methanol extracted soils if Matrix Spike/Matrix Spike Duplicates are not analyzed because of insufficient sample amounts. Weighing 4g of Ottawa sand and 4mLs of P & T methanol into a 20mL scinillation vial makes a BS/BSD. 4uL of the surrogate mix @ 2500µg/mL and 125µL of a second source spike mix @ 100µg/mL is spiked into the scintillation vial giving the surrogates and spikes a final concentration of 50µg/L.

A 1mL methanol aliquot of the sample is placed into a 50mL volumetric and brought to volume with OFW. The volumetric is inverted three times slowly, poured into a non-preserved 40mL VOA vial and placed on the instrument for analysis. The autosampler then adds sufficient ISTD mix into a 5mL sample aliquot for a final ISTD concentration of 50µg/L.

SAMPLE ANALYSIS

1. Identify Matrixes

The two matrices are water and methanol extracted soils. A methanol extract is required if a 5.0 g sample size of soil yielded results above the calibration range.

2. Sample Preparation

Samples must be warmed to ambient temperature before analysis begins.

A. Water:

Place a 40mL VOA vial of the specified sample onto the autosampler. Transfer a 5mL aliquot of the sample into a sparge tube and purge.

Primary Dilution (1:10 or less) – 5 mL to 25mL of sample is added into Organic Free Water in a gastight syringe. Pour the contents into a non-preserved 40mL VOA vial and placed on the instrument for analysis.

Secondary Dilution (1:20 to 1:10,000) - 5.0µL to 2.5mL of sample is added into a 50mL volumetric brought to volume with OFW. Invert slowly three times. Pour the contents into a non-preserved 40mL VOA vial and place on the instrument for analysis.

To each 5mL sample aliquot, the autosampler adds 1µL of the ISSTD mix , resulting in a final concentration of 50µg/L.

B. Soil:

A 25g EnCore™ sampler is extruded into 20mLs of Purge and Trap Methanol in a 60mL soil jar. The tare weight of the jar and the approximate weight of 20mLs of MEOH (15.8g) is added and recorded. The jar containing the 25g plug then placed on the balance and the tare weight recorded. The final sample weight is found by subtracting the weight of the

jar/MEOH from the weight of the jar/MEOH/sample. Methanol is then added to bring the final ratio of soil to MEOH to 1:1. The amount of surrogate @ 2500µg/mL added is equal to the final weight of the sample/MEOH.

A 5g EnCore™ may also be used in place of a 25g EnCore™ sampler. It will follow the same procedure as mentioned above except the sample will be extruded into a 20mL scinillation vial containing 3mLs of P&T MEOH. The most important aspect is to maintain a 1:1 ratio of soil to methanol.

Samples received pre-weighed in the field should also have a 5g or 25g sample aliquot already preserved in MEOH. The same procedure for medium level preparation, as listed above, is followed.

QC samples are prepped with each batch of 20 or fewer samples. Weighing 5g of Ottawa sand into a 20mL scintillation vial, and adding 5mLs of P & T methanol make a MEOH blank. In order to obtain a final concentration of 50µg/L for surrogates, 5µL of surrogate mix @ 2500µg/mL is spiked into the scintillation vial. The same process is used for Blank Spikes/Blank Spike Duplicates* except 4g of Ottawa sand and 4mLs of P & T methanol are placed into a 20mL scintillation vial. 4µL of the surrogate mix @ 2500µg/mL and 125µL of a second source spike mix @ 100µg/mL is spiked into the scintillation vial giving the surrogates and spikes a final concentration of 50µg/L.

Place a 1mL methanol aliquot of the sample into a 50mL volumetric and bring to volume with OFW. Slowly invert the volumetric three times, pour into a non-preserved 40mL VOA vial, and place on the instrument for analysis. The autosampler then adds 1µL of the ISTD mix @ 250µg/mL into a 5mL sample aliquot for a final ISTD concentration of 50µg/L.

Record all data pertinent to medium level soil extract preparation in the designated logbook.

The BS/BSD is used when MS/MSD samples are not available due to insufficient sample amounts.

3. Analysis

Analyze samples by purge-and-trap GC/MS methodology. Waters and medium level soils are purged at ambient temperature.

Identify and quantitate the target compounds using relative retention times (RRT) and average response factors from the 5-point calibration curve. For establishing correspondence of the RRT, the sample component RRT must compare within +/- 0.06 RRT units of the RRT of the continuing calibration standard component. Compare computer-matched compounds with reference spectra to accept or reject each identification. All ions present in the reference spectrum that are at least 10% of the base peak must be present in the sample background-subtracted spectrum. Also, the relative intensities of these ions must agree within +/- 20% between the standard and sample spectra. While this is a good guideline, acceptance or rejection will depend upon the judgment of the analyst.

It may be necessary to adjust the volume of sample used for analysis so that the concentration of the analytes of interest is within the calibration range. A maximum of 5.0mL of an aqueous sample will be analyzed. While every attempt is made to provide the

best detection limits, interfering peaks of non-target compounds often limit the most concentrated analysis of a sample. Detection limits will be raised to account for the dilution.

4. Verification of Sample Preservation

Following sample analyses, the pH of all waters shall be verified by wide range pH paper. The results will be documented in the logbook. If the pH is found to be 3 or greater and the sample was not analyzed within 7 days of collection, a narrative is written and submitted with the sample results.

QUALITY CONTROL

1. The surrogate recoveries and internal standard areas must be checked to determine that they are within the established control limits. If the requirements are not met, the sample is reanalyzed. The internal standard areas for the method blank and samples analyzed must be within -50% to +100% of the calibration check standard's internal standard areas. In addition, the retention time must be within ± 30 seconds from that in the mid-point standard level in the most recent calibration sequence. If this condition is not met, the chromatographic system must be inspected for any malfunction and corrective action must be made. If an internal standard is outside of control limits but no compounds of interest are being quantified, no re-analysis is necessary. If the second analysis is within control limits, the data from that analysis is reported. If the failure is repeated, data from the "better" of the two analyses is reported and the anomaly is discussed in a sample narrative.

2. A sample matrix spike (MS) and matrix spike duplicate (MSD) must be performed with every analytical batch of 20 samples or less per instrument of the same matrix type by the same method. A matrix type for an MS/MSD is defined as unheated water, which includes medium level soil methanol extracts. The spiking solution must be from a secondary source other than the reference standards used in the calibration. The percent recoveries for each spiked compound must be checked to determine that they are within the established control limits listed in Appendix D. If the MS/MSD recovery is outside the control criteria, check the LCS to determine whether the analytical system was within control. If the analyte was within the control limits in the LCS, the failure may be attributed to matrix effect. The results of all of the associated samples are qualified with "N" flag. If the RPD is outside of the control limits, the data is qualified with a "*" flag. If the LCS recovery was outside the control criteria, the analytical system is out of control and corrective action must be taken. All associated samples must be re-analyzed when the problem has been corrected.

3. Method Detection Limits (MDLs):

MDLs are determined as specified in 40 CFR, Part 136, Appendix B, and must be performed once a year per instrument for all target compounds of interest. Each available instrument will perform one unheated set of MDLs using Purge and Trap methodology. At least seven replicates will be analyzed per set.

4. Surrogate Recovery Limits:

One set each of surrogate recovery limits for unheated waters and methanol-extracted soils must be established for all instruments performing GC/MS analysis. These limits are to be updated annually using data from all GC/MS instruments.

5. Matrix Spike and Duplicate (MS/MSD) Recovery Limits:

   One set each of MS/MSD recovery limits for unheated waters and methanol extracted soils must be established for all instruments performing GC/MS analysis. These limits are to be updated annually using data from all GC/MS instruments. See Appendix D.

METHOD EXCEEDANCES

1. Allowance is made for sporadic marginal exceedances of in-house generated control limits in LCS/LCSD and without further corrective action. Data for the analytes that exceed the control limits shall be qualified. The number of allowances is based on the number of analytes spiked. Please refer to the formula in Appendix E to determine the number of analytes allowed outside the control limits. The analytical system is out of control if more compounds are outside of the control limits than allowed by the formula.

2. There are no other known method exceedances.

APPENDIX A

FORMULA SHEET

#1. Response Factor:

$$RF = \text{RESPONSE FACTOR} = \frac{(Ax)(Cis)}{(Ais)(Cx)}$$

Where:

Ax = Area of analyte's characteristic ion of quantitation

Ais = Area of corresponding internal standard's ion of quantitation

Cis = Concentration of corresponding internal standard

Cx = Concentration of analyte to be measured

#2. Concentration calculation for raw amount using average RF and internal standards:

$$\text{Sample Amount} = \frac{(Ax)}{(Ais)} \times \frac{(Cis)}{(\text{Average RF})} \times DF$$

Where:

Ax = Area of analyte's characteristic ion of quantitation

Ais = Area of corresponding internal standard's ion of quantitation

Cis = Concentration of corresponding internal standard

Average RF = Average Response Factor of compound from initial calibration

DF = Dilution Factor (if applicable)

APPENDIX B

TARGET COMPOUND LIST, INTERNAL STANDARDS, SURROGATES, AND ESTIMATED QUANTITATION LIMITS (EQLs) *

	LOW LEVEL EQL (µg/l)	MEDIUM LEVEL EQL (µg/Kg)
INTERNAL STANDARD **PENTAFLUOROBENZENE**:		
Dichlorodifluoromethane	2	50
Chloromethane	2	50
Bromomethane	2	50
Vinyl chloride	2	50
Chloroethane	2	50
Trichlorofluoromethane	2	50
Dichlorofluoromethane	2	50
Allyl Chloride	5	250
Acrolein	20	1000
Acetone	5	250
Diethyl Ether	1	50
1,1-Dichloroethene	1	50
Iodomethane	5	250
Acrylonitrile	10	500
Methylene chloride	1	50
Carbon disulfide	1	50
Trans-1,2-Dichloroethene	1	50
Methyl Tert Butyl Ether	1	50
1,1-Dichloroethane	1	50
Vinyl Acetate	10	500
2-Butanone	5	250
Diisopropyl Ether	1	50
Cis-1,2-Dichloroethene	1	50
Bromochloromethane	1	50
Chloroform	1	50
2,2-Dichloropropane	1	50
Tetrahydrofuran	10	500
1,2-Dichloroethane	1	50
1,1,1-Trichloroethane	1	50
1,1-Dichloropropene	1	50
Carbon tetrachloride	1	50
Benzene	1	50
Diethoxymethane	10	500
Dibromofluoromethane (SURR)		

APPENDIX B (Continued)

TARGET COMPOUND LIST, INTERNAL STANDARDS, SURROGATES, AND ESTIMATED QUANTITATION LIMITS (EQLs)

	LOW LEVEL EQL (µg/l)	MEDIUM LEVEL EQL (µg/Kg)
INTERNAL STANDARD **1,4-DIFLUOROBENZENE**:		
Trichloroethene	1	50
1,2-Dichloropropane	1	50
2,3-Dichloropropane	1	50
Dibromomethane	1	50
Bromodichloromethane	1	50
2-chloroethyl vinyl ether	5	250
cis-1,3-Dichloropropene	1	50
Toluene	1	50
trans-1,3-Dichloropropene	1	50
4-Methyl-2-pentanone	5	250
1,1,2-Trichloroethane	1	50
Tetrachloroethene	1	50
1,3-Dichloropropane	1	50
Dibromochloromethane	1	50
2-Hexanone	5	250
1,2-Dibromoethane	1	50
Toluene-d8 (SURR)		
INTERNAL STANDARD **CHLOROBENZENE-d5**:		
Chlorobenzene	1	50
1,1,1,2-Tetrachloroethane	1	50
Ethylbenzene	1	50
m-, p-, Xylene	2	100
o-Xylene	1	50
Styrene	1	50
Bromoform	1	50
Isopropylbenzene	1	50
Trans-1,4-Dichloro-2-Butene	5	250
Cis-1,4-Dichloro-2-Butene	5	250
Bromobenzene	1	50
4-Bromofluorobenzene (SURR)		

APPENDIX B (Continued)

TARGET COMPOUND LIST, INTERNAL STANDARDS, SURROGATES, AND ESTIMATED QUANTITATION LIMITS (EQLs)

	LOW LEVEL EQL (µg/l)	MEDIUM LEVEL EQL (µg/Kg)
INTERNAL STANDARD **1,4-Dichlorobenzene**:		
1,1,2,2-Tetrachloroethane	1	50
1,2,3-Trichloropropane	1	50
n-Propylbenzene	1	50
2-Chlorotoluene	1	50
4-Chlorotoluene	1	50
1,3,5-Trimethylbenzene	1	50
Tert-Butylbenzene	1	50
1,2,4-Trimethylbenzene	1	50
Sec-Butlybenzene	1	50
1,3-Dichlorobenzene	1	50
1,4-Dichlorobenzene	1	50
1,2,3-Trimethylbenzene	1	50
P-Isopropyltoluene	1	50
1,2-Dichlorobenzene	1	50
N-Butylbenzene	1	50
1,2-Dibromo-3-chloropropane	5	250
1,2,4-Trichlorobenzene	1	50
Naphthalene	1	50
Hexachlorobutadiene	1	50
1,2,3-Trichlorobenzene	1	50

*Lower quantitation limits may be obtained depending on project requirements.

APPENDIX C

TABLE 1
GC/MS PERFORMANCE STANDARD

Bromofluorobenzene (BFB)

m/z	Ion Abundance Criteria
50	15-40% of mass 95
75	30-60% of mass 95
95	Base peak, 100% relative abundance
96	5-9% of mass 95
173	Less than 2% of mass 174
174	Greater than 50% of mass 95
175	5-9% of mass 174
176	95-101% of mass 174
177	5-9% of mass 176

TABLE 2
GC/MS PERFORMANCE STANDARD
CLP OLM3.1
Bromofluorobenzene (BFB)

m/z	Ion Abundance Criteria
50	8-40% of mass 95
75	30-66% of mass 95
95	Base peak, 100% relative abundance
96	5-9% of mass 95
173	Less than 2% of mass 174
174	50- 120% of mass 95
175	4-9% of mass 174
176	93-101% of mass 174
177	5-9% of mass 176

TABLE 3

CALIBRATION CHECK COMPOUNDS (CCC)

1,1-Dichloroethene
Chloroform
1,2-Dichloropropane
Toluene
Ethylbenzene
Vinyl Chloride

The % RSD for the initial calibration must be less than 30%.
The % RSD for the continuing calibration must be less than 20%.

SYSTEM PERFORMANCE CHECK COMPOUNDS (SPCC)	Minimum RRF
Chloromethane	0.10
1,1-Dichloroethane	0.10
Bromoform	0.10
1,1,2,2-Tetrachloroethane	0.30
Chlorobenzene	0.30

TABLE 4
CHR Retention Times and Characteristic Masses (m/z)

Compound	Retention Time	Primary Ion	Secondary Ions
Dichlorodifluoromethane	2.33	85	87
Chloromethane	2.54	50	52
Vinyl Chloride	2.64	62	64
Bromomethane	2.97	94	96
Chloroethane	3.05	64	66
Trichlorofluoromethane	3.23	101	103
Acrolein	3.64	56	55,58
Iodomethane	3.85	142	127,141
Acetonitrile	4.05	41	40,39
Carbon Disulfide	3.90	76	78
Methyl-t-butyl ether	4.21	73	57
Allyl Chloride	3.97	76	41,39,78
Methylene Chloride	4.09	84	86,49
1,1-Dichloroethene	3.68	96	61,63
Diethyl Ether	3.45	74	45,59
Acetone	3.75	58	43
trans-1,2-Dichloroethene	4.26	96	61,98
Acrylonitrile	4.31	53	52,51
1,1-Dichloroethane	4.61	63	65,83
Vinyl Acetate	4.58	43	86
2,2-Dichloropropane	5.04	77	97
2-Butanone	5.05	72	43
cis-1,2-Dichloroethene	5.05	96	61,98
Propionitrile (ethyl cyanide)	5.19	54	52,55,40
Chloroform	5.27	83	85

Compound	Retention Time	Primary Ion	Secondary Ions
Bromochloromethane	5.26	128	49,130
Methacrylonitrile	5.28	41	67,39,52,66
1,1,1-Trichloroethane	5.42	97	99,61
Carbon Tetrachloride	5.53	117	119
1,1-Dichloropropene	5.54	75	110,77
Benzene	5.71	78	-
1,2-Dichloroethane	5.77	62	98
Trichloroethene	6.21	95	97,130,132
1,2-Dichloropropane	6.44	63	112
Bromodichloromethane	6.64	83	85,127
Dibromomethane	6.55	93	95,174
Methyl Methacrylate	6.42	69	41,100,39
1,4-Dioxane	6.54	88	58,43,57
2-Chloroethylvinyl ether	6.85	63	65,106
4-Methyl-2-pentanone	7.10	100	43,58,85
Toluene	7.27	92	91
trans-1,3-Dichloropropene	7.49	75	77,39
cis-1,3-Dichloropropene	7.01	75	77,39
1,1,2-Trichloroethane	7.67	83	97,85
Ethyl Methacrylate	7.46	69	41,99,86,114
2-Hexanone	7.83	43	58,57,100
Tetrachloroethene	7.74	164	129,131,166
1,3-Dichloropropane	7.84	76	78
Dibromochloromethane	8.03	129	127
1,2-Dibromoethane	8.17	107	109,188
Chlorobenzene	8.56	112	77,114
1,1,1,2-Tetrachloroethane	8.64	131	133,119
Ethylbenzene	8.61	91	106

Compound	Retention Time	Primary Ion	Secondary Ions
m/p-Xylene	8.72	106	91
o-Xylene	9.11	106	91
Styrene	9.14	104	78
Bromoform	9.38	173	175,254
Isopropylbenzene(Cumene)	9.44	105	120
cis-1,4-Dichloro-2-butene	9.58	75	53,77,124,89
1,1,2,2-Tetrachloroethane	9.80	83	131,85
Bromobenzene	9.83	156	77,158
1,2,3-Trichloropropane	9.87	75	77
n-Propylbenzene	9.84	91	120
2-Chlorotoluene	9.99	91	126
trans-1,4-Dichloro-2-butene	9.86	53	88,75
1,3,5-Trimethylbenzene	10.00	105	120
4-Chlorotoluene	10.10	91	126
Pentachloroethane	10.47	167	130,132,165,169
1,2,4-Trimethylbenzene	10.39	105	120
sec-Butylbenzene	10.55	105	134
tert-Butylbenzene	10.32	119	91,134
p-Isopropyltoluene	10.68	119	134,91
1,3-Dichlorobenzene	10.74	146	111,148
1,4-Dichlorobenzene	10.83	146	111,148
n-Butylbenzene	11.09	91	92,134
1,2-Dichlorobenzene	11.23	146	111,148
1,2-Dibromo-3-chloropropane	12.04	75	155,157
1,2,4-Trichlorobenzene	12.84	180	182,145
Hexachlorobutadiene	12.93	225	223,227
Hexachloroethane	11.44	201	166,199,203
Naphthalene	13.12	128	-

Compound	Retention Time	Primary Ion	Secondary Ions
1,2,3-Trichlorobenzene	13.37	180	182,145
Internal Standards/Surrogates			
Pentafluorobenzene	5.38	168	-
1,4-Difluorobenzene	5.99	114	-
Chlorobenzene-d5	8.55	117	-
1,4-Dichlorobenzene-d4	10.81	152	-
4-Bromofluorobenzene	9.66	95	174,176
Dibromofluoromethane	5.38	113	-
Toluene-d8	7.21	98	-

TABLE 5

Reagent	Conc.	Purity	Manufacturer	Vendor
Methanol	100%	Purge and Trap grade	Burdick & Jackson	VWR Scientific
Sodium Bisulfate	granular	Certified grade	Fisher Scientific	Fisher Scientific
Helium gas		99.999%	Michigan Airgas	Michigan Airgas
OFW		ASTM Type II	Barnstead-Nanopure	VWR Scientific
4-BFB Tuning Standard	5000 ug/mL	99%	Restek	Restek
Ottawa Sand, 20-30 mesh		ASTM C190	Fisher Scientific	Fisher Scientific
8260 Internal Standard	2500 ug/mL	99%	Restek	Restek
8260 Surrogate Standard	2500 ug/mL	99%	Restek	Restek
VOA Matrix Spike	2500 ug/mL	99%	Restek	Restek
Custom VOC Mix Rev. 4/99	2000 ug/mL	99%	Restek	Restek
Custom Acrolein Mix	20000 ug/mL	99%	Restek	Restek
VOA Calibration Mix #1	5000 ug/mL	99%	Restek	Restek

Reagent	Conc.	Purity	Manufacturer	Vendor
502.2 Cal 2000 Megamix	2000 ug/mL	99%	Restek	Restek
2-Chloroethylvinyl Ether	2000 ug/mL	99%	Restek	Restek
502.2 Calibration Mix#1	2000 ug/mL	99%	Restek	Restek
Custom Cyclohexanes/Methyl Acetate Mix	10000 ug/mL	99%	Restek	Restek
1,4-Dioxane Standard	2000 ug/mL	99%	Restek	Restek
Diethoxymethane	neat	99%	Aldrich Chemical	Aldrich Chemical
Vinyl Acetate	neat	99+%	Aldrich Chemical	Aldrich Chemical

TABLE 6

Standard	Acronym	Concentration of Intermediate	Reagents Used	Final Volume
4-Bromofluorobenzene	BFB	25 ug/mL	50µL of 5000 ug/mL BFB into methanol	10 mL
Internal Standard	IS	250 ug/mL	5000 µL of 2500 ug/mL IS into methanol	50 mL
Surrogate Standard	SS	250 ug/mL	5000 µL of 2500 ug/mL SS into methanol	50 mL
Internal/Surrogate Stnd.	IS/SS	250 ug/mL	5000 µL of 2500 ug/mL IS/SS into MeOH	50 mL
100 ug/mL Calibration Stnd.	CAL	100 ug/mL	1250 µL of 2000 ug/mL Custom Voa Mix 1250 µL of 2000 ug/mL 502.2 Cal 2000 1250 µL of 2000 ug/mL 2-Chloroethylvinyl ether 1250 µL of 2000 ug/mL 502.2 Cal. Mix #1 125 µL of 20000 ug/mL Custom Acrolein 500 µL of 5000 ug/mL VOA Cal. Mix #1 263 µL of 9520 ug/mL Vinyl Acetate 246 µL of 10168 ug/mL Diethoxymethane	25 mL
Vinyl Acetate	VA	9520 ug/mL	0.238 mg of neat Vinyl Acetate	25 mL

APPENDIX D

MATRIX SPIKE ANALYSES
QUALITY CONTROL LIMITS

Matrix Spike Compounds	Water %Rec.	Solids %Rec.
1-Propanol	(70-130)	(70-130)
1,1-Dichloroethane	(50.156)	(43-156)
1,1-Dichloroethene	(43-164)	(36-169)
1,1-Dichloropropene	(69-131)	(40-154)
1,1,1-Trichloroethane	(63-139)	(50-144)
1,1,1,2-Tetrachloroethane	(82-124)	(61-126)
1,1,2-Trichloro-1,2,2-Trichloroethane	(1-143)	(61-126)
1,1,2-Trichloroethane	(1-143)	(67-127)
1,1,2,2-Tetrachloroethene	(73-126)	(D-209)
1,2-Dibromo-3-Chloropropane	(58-144)	(6-162)
1,2-Dibromoethane	(71-129)	(57-128)
1,2-Dichlorobenzene	(69-131)	(36-130)
1,2-Dichloroethane	(63-135)	(50-143)
1,2-Dichloroethene, total	(51-148)	(70-130)
1,2-Dichloropropane	(71-129)	(55-137)
1,2,3-Trichlorobenzene	(63-140)	(D-124)
1,2,3-Trichloropropane	(73-130)	(45-158)
1,2,3-Trimethylbenzene	(67-132)	(70-130)
1,2,4-Trichlorobenzene	(63-140)	(D-135)
1,2,4-Trimethylbenzene	(63-144)	(39-145)
1,3-Dichlorobenzene	(67-135)	(34-134)
1,3-Dichloropropane	(74-125)	(63-131)
1,3,5-Trimethylbenzene	(62-146)	(49-146)
1,4-Dichlorobenzene	(66-132)	(29-135)
1,4-Dioxane	(70-130)	(70-130)
2-Butanone	(31-134)	(70-130)
2-Chloroethylvinylether	(N/A)	(70-130)
2-Chlorotoluene	(66-139)	(58-132)
2-Hexanone	(44-152)	(70-130)
2-Methylnaphthalene	(70-130)	(70-130)
2,2-Dichloropropane	(55-147)	(42-152)
2,3-Dichloropropene	(70-130)	(70-130)
4-Chlorotoluene	(65-140)	(49-135)
4-Methyl-2-pentanone	(62-144)	(70-130)
Acetone	(13-149)	(70-130)
Acetonitrile	(70-130)	(70-130)
Acrolein	(49-133)	(70-130)
Acrylonitrile	(49-133)	(70-130)
Allyl Chloride	(52-143)	(70-130)
Benzene	(63-137)	(43-151)
Benzyl Chloride	(70-130)	(70-130)
Bromobenzene	(68-135)	(50-131)

APPENDIX D (cont.)

MATRIX SPIKE ANALYSES
QUALITY CONTROL LIMITS

Matrix Spike Compounds	Water %Rec.	Solids %Rec.
Bromochloromethane	(60-129)	(52-144)
Bromodichloromethane	(73-134)	(57-124)
Bromoform	(67-143)	(51-115)
Bromomethane	(1-280)	(63-169)
Carbon disulfide	(61-140)	(70-130)
Carbon tetrachloride	(64-145)	(43-143)
Chlorobenzene	(72-131)	(66-114)
Chlorodibromomethane/Dibromochloromethane	(72-136)	(44-133)
Chloroethane	(56-157)	(50-161)
Chloroform	(63-137)	(50-145)
Chloromethane	(49-149)	(51-167)
Chloroprene	(70-130)	(70-130)
cis-1,2-Dichloroethene	(55-136)	(64-126)
cis-1,3-Dichloropropene	(72-130)	(58-122)
cis-1,4-Dichloro-2-Butene	(67-138)	(70-130)
Crotonaldehyde	(70-130)	(70-130)
Cyclohexane	(70-130)	(70-130)
Cyclohexanone	(70-130)	(70-130)
Di-isopropyl ether	(58-130)	(70-130)
Dibromomethane	(74-126)	(62-129)
Dichlorodifluoromethane	(25-177)	(33-162)
Dichlorofluoromethane	(25-177)	(70-130)
Diethyl ether	(37-143)	(70-130)
Ethyl Acetate	(70-130)	(70-130)
Ethyl methacrylate	(70-130)	(70-130)
Ethylbenzene	(72-137)	(58-129)
Ethylene Oxide	(70-130)	(70-130)
Hexachlorobutadiene	(43-158)	(D-144)
Hexachloroethane	(70-130)	(70-130)
Iodomethane	(39-148)	(70-130)
Isobutanol	(70-130)	(70-130)
Isobutyl Acetate	(70-130)	(70-130)
Isopropanol	(70-130)	(70-130)
Isopropyl Acetate	(70-130)	(70-130)
Isopropyl benzene	(69-142)	(49-134)
Methacrylonitrile	(70-130)	(70-130)
Methyl tert-butyl Ether	(54-134)	(70-130)
Methyl Acetate	(70-130)	(70-130)
Methyl Methacrylate	(27-172)	(70-130)
Methylcyclohexane	(70-130)	(70-130)
Methylene chloride	(46-151)	(40-154)
n-Butanol	(70-130)	(70-130)

APPENDIX D (cont.)

MATRIX SPIKE ANALYSES
QUALITY CONTROL LIMITS

Matrix Spike Compounds	Water %Rec.	Solids %Rec.
n-Butyl Acetate	(70-130)	(70-130)
n-Butylbenzene	(57-149)	(41-155)
n-Hexane	(70-130)	(70-130)
n-Heptane	(70-130)	(70-130)
n-Propanol	(70-130)	(70-130)
n-Propyl Acetate	(70-130)	(70-130)
n-Propylbenzene	(64-143)	(40-154)
Naphthalene	(61-142)	(57-132)
p-Isopropyltoluene	(61-146)	(5-167)
Propionitrile	(70-130)	(70-130)
sec-Butylbenzene	(58-149)	(6-132)
Styrene	(72-136)	(D-163)
tert-Butylbenzene	(63-145)	(7-181)
Tetrachloroethene	(62-142)	(58-137)
Tetrahydrofuran	(9-137)	(70-130)
Toluene	(71-136)	(65-128)
trans-1,2-Dichloroethene	(44-163)	(64-132)
trans-1,3-Dichloropropene	(74-132)	(55-125)
trans-1,4-Dichloro-2-Butene	(67-138)	(70-130)
Trichloroethene	(68-137)	(22-179)
Trichlorofluoromethane	(50-156)	(55-148)
Vinyl Acetate	(22-163)	(70-130)
Vinyl chloride	(45-160)	(42-162)
Xylenes, total	(71-137)	(54-131)
Xylenes, -m, -p	(70-138)	(54-131)
Xylenes,-o	(71-137)	(58-128)

APPENDIX E

DETERMINATION OF SPORADIC MARGINAL FAILURES ALLOWED

N[1]	X
5 - 15	1
16 - 30	2
31 - 45	3
46 - 60	4
61 - 75	5
76 - 90	6
91 - 105	7

N = Number of target analytes spiked.
X = Number of Sporadic Marginal Failures (SMF) allowed
[1] = The number of SMF allowances depend upon the number of target analytes reported from the analysis. For instance, if the full list of target compounds as presented in Appendix A are reported, then five (5) SMFs are allowed. If the Matrix Spike (MS) and/or the Laboratory Control Spike (LCS) includes only a subset of compounds and for surrogates, allow up to one (1) SMF for each B/N and A grouping.

B = Base, N = Neutral, A = Acid compounds.

NOTE: SMFs are used when QC limits have been established. They are not used for compounds with advisory QC limits (i.e., QC limits have not yet been established).

APPENDIX B

FIELD STANDARD OPERATING PROCEDURES

SOP 1

EVALUATION OF EXISTING MONITORING WELLS AND WATER LEVEL MEASUREMENT

1.0 PURPOSE

The purpose of this procedure is to provide reference information regarding the proper methods for evaluating existing monitoring wells, and determining water level measurements.

2.0 SCOPE

The procedures described herein are applicable to all existing monitoring wells and, for the most part, are independent of construction materials and methods.

3.0 GLOSSARY

Hydraulic Head - The height to which water will rise in a well.

Water Table - A surface in an unconfined aquifer where groundwater pressure is equal to atmospheric pressure (i.e., the pressure head is zero).

4.0 RESPONSIBILITIES

Site Geologist/Hydrogeologist - Has overall responsibility for obtaining water level measurements and developing groundwater contour maps. The site geologist/hydrogeologist (in concurrence with the Project Manager) shall specify the reference point from which water levels are measured (usually a specific point on the upper edge of the inner well casing), the number of data points needed and which wells shall be used for a contour map, and how many complete sets of water levels are required to adequately define groundwater flow directions (e.g., if there are seasonal variations).

Field Personnel - Must have a basic familiarity with the equipment and procedures involved in obtaining water levels, and must be aware of any project-specific requirements.

5.0 PROCEDURES

Accurate, valid and useful groundwater monitoring requires that four important conditions be met:

- Proper characterization of site hydrogeology.
- Proper design of the groundwater monitoring program, including adequate numbers of wells installed at appropriate locations and depths.
- Satisfactory methods of groundwater sampling and analysis to meet the data quality objectives (DQOs).
- The assurance that specific monitoring well samples are representative of water quality conditions in the monitored interval.

To insure that these conditions are met, adequate descriptions of subsurface geology, well construction methods and well testing results must be available. The following steps will help to insure that the

required data are available to permit an evaluation of the utility of existing monitoring wells for collecting additional samples.

5.1 Preliminary Evaluation

A necessary first step in evaluating existing monitoring well data is the study and review of the original work plan for monitoring well installation (if available). This helps to familiarize the site geologist/hydrogeologist with site-specific conditions, and will promote an understanding of the original purpose of the monitoring wells.

The next step of the evaluation should involve a review of all available information concerning borehole drilling and well construction. This will allow interpretation of groundwater flow conditions and area geology, and will help to establish consistency between hydraulic properties of the well and physical features of the well or formation. The physical features which should be identified and detailed, if available, include:

- The well identification number, permit number and location by referenced coordinates, the distance from prominent site features, or the location of the well on a map.
- The installation dates, drilling methods, well development methods, and contractors.
- The depth to bedrock -- where rock cores were not taken, auger refusal, drive casing refusal or penetration test results (blow counts for split-barrel sampling) may be used to estimate bedrock interface.
- The soil profile and stratigraphy.
- The borehole depth and diameter.
- The elevation of the top of the protective casing, the top of the well riser, and the ground surface.
- The total depth of the well.
- The type of well materials, screen type, slot size, and length, and the elevation/depths of the screen, interval, and/or monitored interval.
- The elevation/depths of the tops and bottom of the filter pack and well seals and the type and size.

5.2 Field Inspection

During the onsite inspection of existing monitoring wells, features to be noted include:

- The condition of the protective casing, cap and lock.
- The condition of the cement seal surrounding the protective casing.
- The presence of depressions or standing water around the casing.
- The presence of any electrical cable and its connections.

If the protective casing, cap and lock have been damaged or the cement collar appears deteriorated, or if there are any depressions around the well casing capable of holding water, surface water may have infiltrated into the well. This may invalidate previous sampling results since the time when leakage started is unknown.

The routine physical inspection must be followed by a more detailed investigation to identify other potential routes of contamination or sampling equipment malfunction. Any of these occurrences may

invalidate previously collected water quality data. If the monitoring well is to be used in the future, considerations shown in the steps described above should be rectified to rehabilitate the well. After disconnecting any wires, cables or electrical sources, remove the lock and open the cap. Check for the presence of organic vapors with a photoionization detector (PID) or flame-ionization detector (FID) and combustible gas meter to determine the appropriate worker safety level. The following information should be noted:

- Cap function.
- Physical characteristics and composition of the inner casing or riser, including inner diameter and annular space.
- Presence of grout between the riser and outer protective casing and the existence of drain holes in the protective casing.
- Presence of a riser cap, method of attachment to casing, and venting of the riser.
- Presence of dedicated sampling equipment; if possible, remove such equipment and inspect size, materials of construction and condition.

The final step of the field inspection is to confirm previous hydraulic or physical property data and to obtain data not previously available. This includes the determination of static water levels, total well depth and well obstruction. This may be accomplished using a weighted tape measure that can also be used to check for sediment (the weight will advance slowly if sediment is present, and the presence of sediment on the weight upon removal should be noted). If sediment is present, the well be should be redeveloped before sampling.

Lastly, as a final step, the location, condition and expected water quality of the wells should be reviewed in light of their usefulness for the intended purpose of the investigation.

5.3 Water Level (Hydraulic Head) Measurements

5.3.1 General

Groundwater level measurements can be made in monitoring wells, private or public water wells, piezometers, open boreholes, or test pits (after stabilization). Groundwater measurements should generally not be made in boreholes with drilling rods or auger flights present. If groundwater sampling activities are to occur, groundwater level measurements shall take place prior to well evacuation or sampling.

All groundwater level measurements shall be made to the nearest 0.01 foot, and recorded in the site geologist/hydrogeologist's field notebook or on the Groundwater Level Measurement Sheet, along with the date and time of the reading. The total depth of the well shall be measured and recorded, if not already known. Weather changes that occur over the period of time during which water levels are being taken, such as precipitation and barometric pressure changes, should be noted.

In measuring groundwater levels, there shall be a clearly established reference point of known elevation, which is normally identified by a mark on the upper edge of the inner well casing. The reference point shall be noted in the field notebook. To be useful, the reference point should be tied in with an established USGS benchmark or other properly surveyed elevation datum. An arbitrary datum could be used for an isolated group of wells, if necessary.

Cascading water within a borehole or steel well casing can cause false readings with some types of sounding devices (chalked line, electrical). Oil layers may also cause problems in determining the true water level in a well. Special devices (interface probes) are available for measuring the thickness of oil layers and true depth to groundwater, if required.

Water level readings shall be taken regularly, as required by the site geologist/hydrogeologist. Monitoring wells or open-cased boreholes that are subject to tidal fluctuations should be read in conjunction with a tidal chart (or preferably in conjunction with readings of a tide staff or tide level recorder installed in the adjacent water body); the frequency of such readings shall be established by the site hydrogeologist. All water level measurements at a site used to develop a groundwater contour map shall be made in the shortest practical time to minimize affects due weather changes, and at least during the same day.

5.3.2 Water Level Measuring Techniques

There are several methods for determining standing or changing water levels in boreholes and monitoring wells. Certain methods have particular advantages and disadvantages depending upon well conditions. A general description of these methods is presented, along with a listing of various advantages and disadvantages of each technique. An effective technique shall be selected for the particular site conditions by the site geologist/hydrogeologist.

In most instances, preparation of accurate potentiometric surface maps requires that static water level measurements be obtained to a precision of 0.01 feet. To obtain such measurements in individual accessible wells, chalked tape or electrical water level indicator methods have been found best, and thus are the most often utilized. Other, less precise methods, such as the popper or bell sound, or bailer line methods, may be appropriate for developing preliminary estimates of hydraulic conditions. When a large number of (or continuous) readings are required, time-consuming individual readings are not usually feasible. In such cases, it is best to use the float recorder or pressure transducer methods. When conditions in the well limit readings (i.e., turbulence in the water surface or limited access through small diameter tubing), less precise, but appropriate methods such as the air line or capillary tubing methods can be used (see subsequent SOP section for discussion of these devices).

5.3.3 Methods

Water levels can be measured by several different techniques, but the same steps shall be followed in each case. The proper sequence is as follows:

1. Check operation of recording equipment above ground. Prior to opening the well, don personal protective equipment, as required.

2. Record all information specified below in the geologist/hydrogeologist's field notebook or on the Groundwater Level Measurement Sheet:

    - Well number.
    - Water level (to the nearest 0.01 foot; 0.3 cm). Water levels shall be taken from the surveyed reference mark on the top edge of the inner well casing.
    - Time and day of the measurement.

Water level measuring devices with permanently marked intervals shall be used when possible. If water level measuring devices marked by metal or plastic bands clamped at intervals along the measuring line are used, the spacing and accuracy of these bands shall be checked frequently as they may loosen and slide up or down the line, resulting in inaccurate reference points.

5.3.4 Water Level Measuring Devices

Chalked Steel Tape

The water level is measured by chalking a weighted steel tape and lowering it a known distance (to any convenient whole foot mark) into the well or borehole. The water level is determined by subtracting the wetted chalked mark from the total length lowered into the hole.

The tape shall be withdrawn quickly from the well because water has a tendency to rise up the chalk due to capillary action. A water finding paste may be used in place of chalk. The paste is spread on the tape the same way as the chalk, and turns red upon contacting water.

Disadvantages to this method include the following: depths are limited by the inconvenience of using heavier weights to properly tension longer tape lengths; ineffective if borehole/well wall is wet or inflow is occurring above the static water level; chalking the tape is time-consuming; difficult to use during periods of precipitation.

Electric Water Level Indicators

These devices consist of a spool of small-diameter cable and a weighted probe attached to the end. When the probe contacts the water, an electrical circuit is closed and a meter, light, and/or buzzer attached to the spool will signal the contact.

There are a number of commercial electric sounders available, none of which is entirely reliable under all conditions likely to occur in a contaminated monitoring well. In conditions where there is oil on the water, groundwater with high specific conductance, water cascading into the well, steel well casing, or a turbulent water surface in the well, measuring with an electric sounder may be difficult.

For accurate readings, the probe shall be lowered slowly into the well. The electric tape is marked at the measuring point where contact with the water surface was indicated. The distance from the mark to the nearest tape band is measured using an engineer's folding ruler or steel tape, and added to the band reading to obtain the depth to water. If the band is not a permanent-marking band, spacing shall be checked periodically as described in Section 5.3.6.

Popper or Bell Sounder

A bell- or cup-shaped weight that is hollow on the bottom is attached to a measuring tape and lowered into the well. A "plopping" or "popping" sound is made when the weight strikes the surface of the water. An accurate reading can be determined by lifting and lowering the weight in short strokes, and reading the tape when the weight strikes the water. This method is not sufficiently accurate to obtain water levels to 0.01 feet, and thus is more appropriate for obtaining only approximate water levels quickly.

Float Recorder

A float or an electromechanically actuated water-seeking probe may be used to detect vertical changes of the water surface in the hole. A paper-covered recording chart drum is rotated by the up and down motion of the float via a pulley and reduction gear mechanism, while a clock drive moves a recording pen horizontally across the chart. To ensure continuous records, the recorder shall be inspected, maintained, and adjusted periodically. This type of device is useful for continuously measuring periodic water level fluctuations, such as tidal fluctuations or influences of pumping wells.

Air Line

An air line is especially useful in pumped wells where water turbulence may preclude the use of other devices. A small-diameter weighted tube of known length is installed from the surface to a depth below the lowest water level expected. Compressed air (from a compressor, bottled air, or air pump) is used to purge the water from the tube, until air begins to escape the lower end of the tube, and is seen (or heard) to be bubbling up through the water in the well. The pressure needed to purge the water from the air line multiplied by 2.307 (feet of water for 1 psi) equals the length in feet of submerged air line. The depth to water below the center of the pressure gauge can be calculated by subtracting the length of air line below the water surface from the total length of the air line.

The disadvantages to this method include the need for an air supply and lower level of accuracy (unless a very accurate air pressure gauge is used, this method cannot be used to obtain water level readings to the nearest 0.01 ft).

Capillary Tubing

In small diameter piezometer tubing, water levels are determined by using a capillary tube. Colored or clear water is placed in a small "U"-shaped loop in one end of the tube (the rest of the tube contains air). The other end of the capillary tube is lowered down the piezometer tubing until the water in the loop moves, indicating that the water level has been reached. The point is then measured from the bottom of the capillary tube or recorded if the capillary tube is calibrated. This is the best method for very small diameter tubing monitoring systems such as Barcad and other multilevel systems. Unless the capillary tube is calibrated, two people may be required to measure the length of capillary tubing used to reach the groundwater. Since the piezometer tubing and capillary tubing usually are somewhat coiled when installed, it is difficult to accurately measure absolute water level elevations using this method. However, the method is useful in accurately measuring differences or changes in water levels (i.e., during pumping tests).

Pressure Transducer

Pressure transducers can be lowered into a well or borehole to measure the pressure of water and therefore the water elevation above the transducer. The transducer is wired into a recorder at the surface to record changes in water level with time. The recorder digitizes the information and can provide a printout or transfer the information to a computer for evaluation (using a well drawdown/recovery model). The pressure transducer should be initially calibrated with another water level measurement technique to ensure accuracy. This technique is very useful for hydraulic conductivity testing in highly permeable material where repeated, accurate water level measurements are required in a very short period of time. A sensitive transducer element is required to measure water levels to 0.01 foot accuracy.

Borehole Geophysics

Approximate water levels can be determined during geophysical logging of the borehole (although this is not the primary purpose for geophysical logging and such logging is not cost effective if used only for this purpose). Several logging techniques will indicate water level. Commonly-used logs that will indicate saturated/unsaturated conditions include the spontaneous potential (SP) log and the neutron log.

5.3.5 Data Recording

Water level measurements, time, data, and weather conditions shall be recorded in the geologist/hydrogeologist's field notebook or on the Groundwater Level Measurement Sheet. All water level measurements shall be measured from a known reference point. The reference point is generally a marked point on the upper edge of the inner well casing that has been surveyed for an elevation. The exact reference point shall be marked with permanent ink on the casing since the top of the casing may

not be entirely level. It is important to note changes in weather conditions because changes in the barometric pressure may affect the water level within the well.

5.3.6 Specific Quality Control Procedures for Water Level Measuring Devices

All groundwater level measurement devices must be cleaned before and after each use to prevent cross contamination of wells. Manufacturer's instructions for cleaning the device shall be strictly followed. Some devices used to measure groundwater levels may need to be calibrated. These devices shall be calibrated to 0.01 foot accuracy and any adjustments/corrections shall be recorded in the field logbook/notebook. After the corrections/adjustments are made to the measuring device and entered in the field logbook/notebook, the corrected readings shall be entered onto the Groundwater Level Measurement Sheet. Elevations will be entered on the sheet when they become available.

5.4 Health and Safety Considerations

Groundwater contaminated by volatile organic compounds may release toxic vapors into the air space inside the well pipe. The release of this air when the well is initially opened is a health/safety hazard that must be considered. Initial monitoring of the well headspace and breathing zone concentrations using a PID (e.g., HNu) or FID (e.g., OVA) and combustible gas meters shall be performed to determine required levels of protection.

6.0 RECORDS

A record of all field procedures, tests and observations must be recorded in the site logbook or designated field notebook. Entries in the log/notebook should include the individuals participating in the field effort, and the date and time. The use of annotated sketches may help to supplement the evaluation.

SOP 2

GROUNDWATER SAMPLE ACQUISITION AND ONSITE WATER QUALITY TESTING

1.0 PURPOSE

The purpose of this procedure is to provide information regarding the purge and sample method that shall be used to sample groundwater monitoring wells and methods to sample pumping wells at the Naval Industrial Reserve Ordnance Plant (NIROP) in Fridley, Minnesota.

2.0 SCOPE

This procedure provides information on proper sampling equipment, onsite water quality testing, and techniques for groundwater sampling. Review of the information contained herein will facilitate planning of the field sampling effort by describing standard sampling techniques. The techniques described shall be followed whenever applicable, noting that site-specific conditions or project-specific plans may require modifications to methodology.

3.0 GLOSSARY

Conductance - The conductance of a conductor 1 centimeter long and 1 square centimeter in cross-sectional area. For groundwater measurements, a volume of water contained in a 1 cm x 1 cm sample container (the water acts as the conductor). Conductivity and specific conductance are used synonymously.

Electrolytic Cell - An electrochemical cell in which electrical energy is supplied from an external source. This cell functions in much the same way as a galvanic cell, only the current flows in the opposite direction due to the external source of applied voltage. Electrolytic cells are used in dissolved oxygen measurement.

Galvanic Cell - An electrochemical cell in which chemical energy is spontaneously converted to electrical energy. The electrical energy produced is supplied to an external circuit. Galvanic cells are used in dissolved oxygen measurement.

Ohm - Standard unit of electrical resistance (R). Used in specific conductance measurement. A siemen (or umho) is the standard unit of electrical conductance, the inverse of the ohm.

Oxidation-Reduction Potential (ORP) - A measure of the activity ratio of oxidizing and reducing species as determined by the electromotive force developed by a noble metal electrode, immersed in water, as referenced against a standard hydrogen electrode.

pH - The negative logarithm (base 10) of the hydrogen ion activity. The hydrogen ion activity is related to the hydrogen ion concentration, and, in a relatively weak solution, the two are nearly equal. Thus, for all practical purposes, pH is a measure of the hydrogen ion concentration.

pH Paper - Indicator paper that turns different colors depending on the pH of the solution to which it is exposed. Comparison with color standards supplied by the manufacturer will then give an indication of the solution's pH.

Resistance - A measure of the solution's ability to oppose the passage of electrical current. For metals and solutions, resistance is defined by Ohm's Law, $E = IR$, where E is the potential difference, I is the current, and R is the resistance. Used in measurement of specific conductance.

4.0 RESPONSIBILITIES

Project Hydrogeologist - Responsible for selecting and detailing the specific groundwater sampling techniques, onsite water quality testing (type, frequency, and location), and equipment to be used, and providing detailed input in this regard to the project plan documents. The project hydrogeologist is also responsible for properly briefing and overseeing the performance of the site sampling personnel.

Project Geologist - is primarily responsible for the proper acquisition of the groundwater samples. He/she is also responsible for the actual analyses of onsite water quality samples, as well as instrument calibration, care, and maintenance. When appropriate, such responsibilities may be performed by other qualified personnel (e.g., field technicians).

5.0 PROCEDURES

5.1 General

Groundwater monitoring wells shall be sampled using the purge and sample method outlined in the MPCA Sampling Guidance. Wells shall be purged of stagnant casing water to ensure that formation water representative of groundwater from the screened interval of each well is collected for laboratory analysis. The equipment and methods for purging the well, showing stabilization of the field parameters to document proper purging and field documentation of these procedures are detailed in the sections that follow.

5.2 Sampling, Monitoring, and Evacuation Equipment

Sample containers shall conform to the guidelines expressed in SOP4 and the project planning documents.

The following equipment shall be on hand when sampling ground water wells:

- Sample packaging and shipping equipment - Coolers for sample shipping and cooling, chemical preservatives, appropriate sampling containers and filler, ice, labels and chain-of-custody documents.

- Field tools and instrumentation - Thermometer, pH paper/meter, camera and film (if appropriate), appropriate keys (for locked wells), engineer's rule, water level indicator, specific conductivity meter, and turbidity meter (as applicable).

- Pumps

  - Shallow-well pumps: Centrifugal, pitcher, suction, or peristaltic pumps with droplines, air-lift apparatus (compressor and tubing) where applicable.

  - Deep-well pumps: Submersible pump and electrical power-generating unit, or air-lift apparatus where applicable.

- Other sampling equipment - Submersible centrifugal pumps shall be used to obtain samples for volatile organics from shallow and deep groundwater wells.

- Pails - Plastic, graduated.

- Decontamination solutions - Deionized water, laboratory detergents, 10% nitric acid solution (as required), and analytical-grade solvents (e.g., methanol, acetone, hexane), as required.

Ideally, sample withdrawal equipment shall be completely inert, economical, easily cleaned, cleaned prior to use, reusable, able to operate at remote sites in the absence of power sources, and capable of delivering variable rates for well flushing and sample collection.

5.3 Calculations of Well Volume

To insure that the proper volume of water has been removed from the well prior to sampling it is first necessary to know the volume of standing water in the well pipe. This volume can be easily calculated by the following method. Calculations shall be entered in the site logbook or field notebook or on a sample log sheet form:

- Obtain all available information on well construction (location, casing, screens, etc.).
- Determine well or casing diameter.
- Measure and record static water level (depth below ground level or top of casing reference point).
- Determine depth of well by sounding using a clean, decontaminated, weighted tape measure.
- Calculate number of linear feet of static water (total depth or length of well pipe minus the depth to static water level).
- Calculate one static well volume in gallons: $V = (0.163)(T)(r^2)$

V	=	Static volume of well in gallons.
T	=	Thickness of water table in the well measured in feet (i.e., feet of static water).
r	=	Inside radius of well casing in inches.
0.163	=	A constant conversion factor which compensates for the conversion of the casing radius from inches to feet, the conversion of cubic feet to gallons, and pi.

- Per evacuation volumes discussed above, determine the minimum amount to be evacuated before sampling.

5.4 Evacuation of Static Water (Purging)

5.4.1 General

Before a well is sampled it shall be evacuated of casing water (purged) to ensure that samples consist of fresh formation water from the screened interval of the monitoring well. Prior to the start of purging, the volume of water in the well shall be calculated according to Section 5.3. While the well is being purged, water quality parameters described in MPCA Sampling Guidance Section 3.4, "Field Water-Quality Measurements," and the quantity of water evacuated shall be recorded on the Sampling and Information Sheet and in the field logbook. A pumping rate that shall minimize draw down, while still allowing the well to be purged in a reasonable length of time, shall be used and the rate recorded in the field log. Care shall be taken to avoid any significant amount of cascading or turbulence in the well.

The well shall be purged by withdrawing water from the top of the water column in the well. The pump shall be adjusted vertically as necessary as the level of the water column in the well drops due to pumping. Samples for laboratory analysis shall be collected only after a minimum of three water-column volumes have been purged and stabilization of field water-quality parameters has been demonstrated by meeting the target criteria defined in Section 5.5. A maximum of five water-column volumes shall be removed and if stabilization of field water-quality parameters is not demonstrated a sample may be collected and the lack of stabilization noted in the Field Log Book and on the Sampling Information Sheet. The pump shall be positioned several feet above the top of the screen to collect the sample after purging of the well has been demonstrated.

Wells with extremely slow recharge rates, due to tight formations, shall require alternate purging and sampling methods. If normal purging is clearly impractical, the well shall be pumped to near dryness and

allowed to recover so that sufficient water is available to collect a sample. Sampling shall commence as soon as possible after evacuation. The maximum reasonable time limit shall be one hour.

Past chemical data for each well shall be reviewed to determine if Health Risk Limits (HRLs) are met or exceeded for the well. If the review indicates that the HRLs are exceeded for the well, all purge water shall be containerized and properly disposed. A note of the disposition of purge water shall be recorded in the field logbook and the Sampling Information Sheet.

5.4.2 Evacuation Devices

The following discussion is limited to those devices used during sampling at NIROP.

Submersible Pumps

Submersible pumps take in water and push the sample up a sample tube to the surface. The power sources for these samplers may be compressed gas or electricity. The operation principles vary and the displacement of the sample can be by an inflatable bladder, sliding piston, gas bubble, or impeller. Pumps are available for 2-inch-diameter wells and larger. These pumps can lift water from considerable depths (several hundred feet).

Limitations of this class of pumps include:

- They may have low delivery rates.
- Many models of these pumps are expensive.
- Compressed gas or electric power is needed.
- Sediment in water may cause clogging of the valves or eroding the impellers with some of these pumps.
- Decontamination of internal components can be difficult and time-consuming.

5.5 Onsite Water Quality Testing

This section describes the procedures and equipment required to measure the following parameters of an aqueous sample in the field:

- pH
- Specific Conductance
- Temperature
- Dissolved Oxygen (DO) Concentration
- Oxidation Reduction Potential
- Certain Dissolved Constituents Using Specific Ion Elements
- Turbidity

During well purging at NIROP, certain field water quality parameters shall be measured for stabilization every 3 to 5 minutes or after each water-column volume has been purged. The following target criteria for three consecutive measurements (every 3 to 5 minutes or one water-column apart) will be used to determine stabilization:

- pH +/- 0.1 units
- temperature +/- 0.1 degrees Celsius
- specific conductance (temperature corrected EC) +/-20 mv
- turbidity: less than or equal to 5 NTU

If field parameters do not stabilize after 5 water-column volumes, then lack of stabilization of field parameters shall be noted in the Field Log Book and on the Field Sampling Sheet and the sample collected with a notation of the volume of water purged.

5.5.1 Measurement of pH

5.5.1.1 General

Measurement of pH is one of the most important and frequently used tests in water chemistry. Practically every phase of water supply and wastewater treatment such as acid-base neutralization, water softening, and corrosion control is pH dependent. Likewise, the pH of leachate can be correlated with other chemical analyses to determine the probable source of contamination. It is therefore important that reasonably accurate pH measurements be taken.

Two methods are given for pH measurement: the pH meter and pH indicator paper. The indicator paper is used when only a rough estimate of the pH is required, and the pH meter when a more accurate measurement is needed. The response of a pH meter can be affected to a slight degree by high levels of colloidal or suspended solids, but the effect is usually small and generally of little significance. Consequently, specific methods to overcome this interference are not described. The response of pH paper is unaffected by solution interferences from color, turbidity, colloidal or suspended materials unless extremely high levels capable of coating or masking the paper are encountered. In such cases, use of a pH meter is recommended.

5.5.1.2 Principles of Equipment Operation

Use of pH papers for pH measurement relies on a chemical reaction caused by the acidity or basicity of the solution created by the addition of the water sample reacting with the indicator compound on the paper. Various types of pH papers are available, including litmus (for general acidity or basicity determination) and specific pH range hydrion paper.

Use of a pH meter relies on the same principle as other ion-specific electrodes. Measurement relies on establishment of a potential difference across a glass or other type of membrane in response to (in this instance, hydrogen) ion concentration across that membrane. The membrane is conductive to ionic species and, in combination with a standard or reference electrode, a potential difference proportional to the ion concentration is generated and measured.

5.5.1.3 Equipment

The following equipment is needed for taking pH measurements:

- Stand-alone portable pH meter, or combination meter (e.g., Horiba U-10), or combination meter equipped with an in-line sample chamber.
- Combination electrode with polymer body to fit the above meter (alternately a pH electrode and a reference electrode can be used if the pH meter is equipped with suitable electrode inputs).
- Buffer solutions, as specified by the manufacturer.
- pH indicator paper, to cover the pH range 2 through 12.
- Manufacturer's operation manual.

5.5.1.4 Measurement Techniques for Field Determination of pH

pH Meter

The following procedure is used for measuring pH with a pH meter (meter standardization is according to manufacturer's instructions):

- Inspect the instrument and batteries prior to initiation of the field effort.
- Check the integrity of the buffer solutions used for field calibration. Buffer solutions need to be changed often because of degradation upon exposure to the atmosphere.
- Immerse the tip of the electrodes in water overnight. If this is not possible due to field conditions, immerse the electrode tip in water for at least an hour before use. The electrode tip may be immersed in a rubber or plastic sack containing buffer solution for field transport or storage. This is not applicable for all electrodes as some must be stored dry.
- If applicable, make sure all electrolyte solutions within the electrode(s) are at their proper levels and that no air bubbles are present within the electrode(s).
- Calibrate on a daily use basis following manufacturer's instructions. Record calibration data on an equipment calibration log sheet.
- Immerse the electrode(s) in the unknown solution, slowly stirring the probe until the pH stabilizes. Stabilization may take several seconds to minutes. If the pH continues to drift, the sample temperature may not be stable, a physical reaction (e.g., degassing) may be taking place in the sample, or the meter or electrode may be malfunctioning. This must be clearly noted in the logbook.
- Read and record the pH of the solution. pH shall be recorded to the nearest 0.1 pH unit. Also, record the sample temperature.
- Rinse the electrode(s) with deionized water.
- Store the electrode(s) in an appropriate manner when not in use.

Any visual observation of conditions that may interfere with pH measurement, such as oily materials, or turbidity, shall be noted.

pH Paper

Use of pH paper is very simple and requires no sample preparation, standardization, etc. pH paper is available in several ranges, including wide-range (indicating approximately pH 1 to 12), mid-range (approximately pH 0 to 6, 6 to 9, 8 to 14) and narrow-range (many available, with ranges as narrow as 1.5 pH units). The appropriate range of pH paper shall be selected. If the pH is unknown the investigation shall start with wide-range paper and proceed with successively narrower range paper until the sample pH is adequately determined.

5.5.2 Measurement of Specific Conductance

5.5.2.1 General

Conductance provides a measure of dissolved ionic species in water and can be used to identify the direction and extent of migration of contaminants in groundwater or surface water. It can also be used as a measure of subsurface biodegradation or to indicate alternate sources of groundwater contamination.

Conductivity is a numerical expression of the ability of a water sample to carry an electric current. This value depends on the total concentration of the ionized substances dissolved in the water and the temperature at which the measurement is made. The mobility of each of the various dissolved ions, their valences, and their actual and relative concentrations affect conductivity.

It is important to obtain a specific conductance measurement soon after taking a sample, since temperature changes, precipitation reactions, and absorption of carbon dioxide from the air all affect the specific conductance.

5.5.2.2 Principles of Equipment Operation

An aqueous system containing ions will conduct an electric current. In a direct-current field, the positive ions migrate toward the negative electrode, while the negatively charged ions migrate toward the positive electrode. Most inorganic acids, bases and salts (such as hydrochloric acid, sodium carbonate, or sodium chloride, respectively) are relatively good conductors. Conversely, organic compounds such as sucrose or benzene, which do not disassociate in aqueous solution, conduct a current very poorly, if at all.

A conductance cell and a Wheatstone Bridge (for the measurement of potential difference) may be used for measurement of electrical resistance. The ratio of current applied to voltage across the cell may also be used as a measure of conductance. The core element of the apparatus is the conductivity cell containing the solution of interest. Depending on ionic strength of the aqueous solution to be tested, a potential difference is developed across the cell which can be converted directly or indirectly (depending on instrument type) to a measurement of specific conductance.

5.5.2.3 Equipment

The following equipment is needed for taking specific conductance (SC) measurements:

- Stand alone portable conductivity meter, or combination meter (e.g., Horiba U-10), or combination meter equipped with an in-line sample chamber.
- Calibration solution, as specified by the manufacturer.
- Manufacturer's operation manual.

A variety of conductivity meters is available which may also be used to monitor salinity and temperatures. Probe types and cable lengths vary, so equipment must be obtained to meet the specific requirement of the sampling program.

5.5.2.4 Measurement Techniques for Specific Conductance

The steps involved in taking specific conductance measurements are listed below (standardization is according to manufacturer's instructions):

- Check batteries and calibrate instrument before going into the field.
- Calibrate on a daily use basis, according to the manufacturer's instructions and record all pertinent information on an equipment calibration log sheet.
- Rinse the cell with one or more portions of the sample to be tested or with deionized water.
- Immerse the electrode in the sample and measure the conductivity. Adjust the temperature setting to the sample temperature (if applicable).
- Read and record the results in a field logbook or sample log sheet.
- Rinse the electrode with deionized water.

If the specific conductance measurements become erratic, recalibrate the instrument and see the manufacturer's instructions for details.

5.5.3 Measurement of Temperature

5.5.3.1 General

In combination with other parameters, temperature can be a useful indicator of the likelihood of biological action in a water sample. It can also be used to trace the flow direction of contaminated groundwater. Temperature measurements shall be taken in-situ, or as quickly as possible in the field. Collected water samples may rapidly equilibrate with the temperature of their surroundings.

5.5.3.2 Equipment

Temperature measurements may be taken with alcohol-toluene, mercury filled or dial-type thermometers. In addition, various meters such as specific conductance or dissolved oxygen meters, which have temperature measurement capabilities, may also be used. Using such instrumentation along with suitable probes and cables, in-situ measurements of temperature at great depths can be performed.

5.5.3.3 Measurement Techniques for Water Temperature

If a thermometer is used to determine the temperature for a water sample:

- Immerse the thermometer in the sample until temperature equilibrium is obtained (1-3 minutes). To avoid the possibility of cross-contamination, the thermometer shall not be inserted into samples that will undergo subsequent chemical analysis.

- Record values in a field logbook or sample log sheet.

If a temperature meter or probe is used, the instrument shall be calibrated according to manufacturer's recommendations.

5.5.4 Measurement of Dissolved Oxygen Concentration

5.5.4.1 General

Dissolved oxygen (DO) levels in natural water and wastewater depend on the physical, chemical and biochemical activities in the water body. Conversely, the growth of many aquatic organisms as well as the rate of corrosivity, are dependent on the dissolved oxygen concentration. Thus, analysis for dissolved oxygen is an important test in water pollution and waste treatment process control. If possible, DO measurements shall be taken in-situ, since concentration may show a large change in a short time if the sample is not adequately preserved.

The monitoring method discussed herein is limited to the use of dissolved oxygen meters only. Chemical methods of analysis (i.e., Winkler methods) are available, but require more equipment and greater sample manipulation. Furthermore, DO meters, using a membrane electrode, are suitable for highly polluted waters, because the probe is submersible, and is not susceptible to interference caused by color, turbidity, colloidal material or suspended matter.

5.5.4.2 Principles of Equipment Operation

Dissolved oxygen probes are normally electrochemical cells that have two solid metal electrodes of different nobility immersed in an electrolyte. The electrolyte is retained by an oxygen-permeable membrane. The metal of highest nobility (the cathode) is positioned at the membrane. When a suitable potential exists between the two metals, reduction of oxygen to hydroxide ion (OH) occurs at the cathode

surface. An electrical current is developed that is directly proportional to the rate of arrival of oxygen molecules at the cathode.

Since the current produced in the probe is directly proportional to the rate of arrival of oxygen at the cathode, it is important that a fresh supply of sample always be in contact with the membrane. Otherwise, the oxygen in the aqueous layer along the membrane is quickly depleted and false low readings are obtained. It is therefore necessary to stir the sample (or the probe) constantly to maintain fresh solution near the membrane interface. Stirring, however, shall not be so vigorous that additional oxygen is introduced through the air-water interface at the sample surface. To avoid this possibility, some probes are equipped with stirrers to agitate the solution near the probe, while leaving the surface of the solution undisturbed.

Dissolved oxygen probes are relatively unaffected by interferences. Interferences that can occur are reactions with oxidizing gases (such as chlorine) or with gases such as hydrogen sulfide, which are not easily depolarized from the indicating electrode. If a gaseous interference is suspected, it shall be noted in the field log book and checked if possible. Temperature variations can also cause interference because probes exhibit temperature sensitivity. Automatic temperature compensation is normally provided by the manufacturer.

5.5.4.3 Equipment

The following equipment is needed to measure dissolved oxygen concentration:

- Stand alone portable dissolved oxygen meter, or combination meter (e.g., Horiba U-10), or combination meter equipped with an in-line sample chamber.
- Sufficient cable to allow the probe to contact the sample.
- Manufacturer's operation manual.

5.5.4.4 Measurement Techniques for Dissolved Oxygen Determination

Probes differ as to specifics of use. Follow the manufacturer's instructions to obtain an accurate reading. The following general steps shall be used to measure the dissolved oxygen concentration:

- The equipment shall be calibrated and have its batteries checked before going to the field.
- The probe shall be conditioned in a water sample for as long a period as practical before use in the field. Long periods of dry storage followed by short periods of use in the field may result in inaccurate readings.
- The instrument shall be calibrated in the field according to manufacturer's recommendations.
- Record all pertinent information on an equipment calibration sheet.
- Rinse the probe with deionized water.
- Immerse the probe in the sample. Be sure to provide for sufficient flow past the membrane by stirring the sample. Probes without stirrers placed in wells can be moved up and down.
- Record the dissolved oxygen content and temperature of the sample in a field logbook or sample log sheet.
- Rinse the probe with deionized water.
- Recalibrate the probe when the membrane is replaced, or as needed. Follow the manufacturer's instructions.

Note that in-situ placement of the probe is preferable, since sample handling is not involved. This however, may not always be practical. Be sure to record whether the liquid was analyzed in-situ, or if a sample was taken.

Special care shall be taken during sample collection to avoid turbulence, which can lead to increased oxygen solubilization and positive test interferences.

5.5.5 Measurement of Oxidation-Reduction Potential

5.5.5.1 General

The oxidation-reduction potential (ORP) provides a measure of the tendency of organic or inorganic compounds to exist in an oxidized state. The ORP parameter therefore provides evidence of the likelihood of anaerobic degradation of biodegradable organics or the ratio of activities of oxidized to reduced species in the sample.

5.5.5.2 Principles of Equipment Operation

When an inert metal electrode, such as platinum, is immersed in a solution, a potential is developed at that electrode depending on the ions present in the solution. If a reference electrode is placed in the same solution, an ORP electrode pair is established. This electrode pair allows the potential difference between the two electrodes to be measured and is dependent on the concentration of the ions in solution. By this measurement, the ability to oxidize or reduce species in solution may be determined. Supplemental measurements, such as dissolved oxygen, may be correlated with ORP to provide knowledge of the quality of the solution, water, or wastewater.

5.5.5.3 Equipment

The following equipment is needed for measuring the oxidation-reduction potential of a solution:

- Portable pH meter or equivalent, with a millivolt scale.
- Platinum electrode to fit above pH meter.
- Reference electrode such as a calomel, silver-silver chloride, or equivalent.
- Reference solution as specified by the manufacturer.
- Manufacturer's operation manual.

5.5.5.4 Measurement Techniques for Oxidation-Reduction Potential

The following procedure is used for measuring oxidation-reduction potential:

- The equipment shall be calibrated and have its batteries checked before going to the field.

- Check that the platinum probe is clean and that the platinum bond or tip is unoxidized. If dirty, polish with emery paper or, if necessary, clean the electrode using aqua regia, nitric acid, or chromic acid, in accordance with manufacturer's instructions.

- Thoroughly rinse the electrode with deionized water.

- Verify the sensitivity of the electrodes by noting the change in millivolt reading when the pH of the test solution is altered. The ORP will increase when the pH of the test solution decreases and the ORP will decrease if the test solution pH is increased. Place the sample in a clean container and agitate the sample. Insert the electrodes and note the ORP drops sharply when the caustic is added (i.e., pH is raised) thus indicating the electrodes are sensitive and operating properly. If the ORP increases sharply when the caustic is added, the polarity is reversed and must be corrected in accordance with

the manufacturer's instructions. If the ORP does not respond as above when the caustic is added, the electrodes shall be cleaned and the above procedure repeated.

- After the assembly has been checked for sensitivity, wash the electrodes with three changes of water or by means of a flowing stream of deionized water from a wash bottle. Place the sample in a clean container and insert the electrodes. Set temperature compensator throughout the measurement period. Read the millivolt potential of the solution, allowing sufficient time for the system to stabilize and reach temperature equilibrium. Measure successive portions of the sample until readings on two successive portions differ by no more than 10 mV. A system that is very slow to stabilize properly will not yield a meaningful ORP. Record all results in a field logbook or sample logsheet, including ORP (to nearest 10 mV), sample temperature and pH at the time of measurement.

5.5.6 Measurement of Turbidity

5.5.6.1 General

Turbidity in water is caused by suspended matter, such as clay, silt, finely divided organic and inorganic matter, soluble colored organic compounds, and microscopic organisms, including plankton. Turbidity is an expression of the optical property that causes light to be scattered and absorbed rather than transmitted in a straight line through the sample.

It is important to obtain a turbidity reading immediately after taking a sample, since irreversible changes in turbidity may occur if the sample is stored too long.

5.5.6.2 Principles of Equipment Operation

Turbidity is measured by the Nephelometric Method. This method is based on a comparison of the intensity of light scattered by the sample under defined conditions with the intensity of light scattered by a standard reference suspension under the same conditions. The higher the scattered light intensity, the higher the turbidity.

Formazin polymer is used as the reference turbidity standard suspension because of its ease of preparation combined with a higher reproducibility of its light-scattering properties than clay or turbid natural water. The turbidity of a specified concentration of formazin suspension is defined as 40 nephelometric units. This same suspension has an approximate turbidity of 40 Jackson units when measured on the candle turbidimeter. Therefore, nephelometric turbidity units (NTU) based on the formazin preparation will approximate units derived from the candle turbidimeter but will not be identical to them.

5.5.6.3 Equipment

The following equipment is needed for turbidity measurement:

- Stand alone portable turbidity meter, or combination meter (e.g., Horiba U-10), or combination meter equipped with an in-line sample chamber.
- Calibration solution, as specified by the manufacturer.
- Manufacturer's operation manual.

5.5.6.4 Measurements Techniques for Turbidity

The steps involved in taking turbidity measurements are listed below (standardization is according to manufacturer's instructions):

- Check batteries and calibrate instrument before going into the field.

- Check the expiration date (etc.) of the solutions used for field calibration.

- Calibrate on a daily use basis, according to the manufacturer's instructions and record all pertinent information on an equipment calibration log sheet.

- Rinse the cell with one or more portions of the sample to be tested or with deionized water.

- Immerse the probe in the sample and measure the turbidity. The reading must be taken immediately as suspended solids will settle over time resulting in a lower, inaccurate turbidity reading.

- Read and record the results in a field logbook or sample log sheet. Include a physical description of the sample, including color, qualitative estimate of turbidity, etc.

- Rinse the electrode with deionized water.

5.6 Sampling

5.6.1 Sampling Plan

The sampling approach consisting of the following, shall be developed as part of the project plan documents which are approved prior to beginning work in the field:

- Background and objectives of sampling.

- Brief description of area and waste characterization.

- Identification of sampling locations, with map or sketch, and applicable well construction data (well size, depth, screened interval, reference elevation).

- Intended number, sequence volumes, and types of samples. If the relative degrees of contamination between wells are unknown or insignificant, a sampling sequence that facilitates sampling logistics may be followed. Where some wells are known or strongly suspected of being highly contaminated, these shall be sampled last to reduce the risk of cross-contamination between wells because of the sampling procedures.

- Sample preservation requirements.

- Work schedule.

- List of team members.

- List of observers and contacts.

- Other information, such as the necessity for a warrant or permission of entry, requirement for split samples, access problems, location of keys, etc.

5.6.2 Sequence of Sampling Steps

The collection of a groundwater sample consists of the following steps:

1. The site Health & Safety Officer (or designee) will first open the well cap and use volatile organic detection equipment (PID or FID) on the escaping gases at the well head to determine the need for respiratory protection.

2. When proper respiratory protection has been donned, sound the well for total depth and water level (using clean equipment) and record these data on a groundwater sampling log sheet; then calculate the fluid volume in the well pipe (as previously described in this SOP).

3. Calculate well volume to be removed as stated in Section 5.3.

4. Select the appropriate purging equipment. If an electric submersible pump with packer is chosen, go to Step 10.

5. Lower the purging equipment or intake into the well to a short distance below the water level and begin water removal. Collect the purged water and dispose of it in an acceptable manner (as applicable). Lower the purging device, as required, to maintain submergence.

6. Measure the rate of discharge frequently. A graduated bucket and stopwatch are most commonly used; other techniques include use of pipe trajectory methods, weir boxes or flow meters.

7. Observe the peristaltic pump intake for degassing "bubbles." If bubbles are abundant and the intake is fully submerged, this pump is not suitable for collecting samples for volatile organics. Never collect volatile organics samples using a vacuum pump.

8. Purge a minimum of three to five casing volumes before sampling. In low-permeability strata (i.e., if the well is pumped to dryness), one volume will suffice. Purged water shall be collected in a designated container and disposed in an acceptable manner.

9. If sampling using a pump, lower the pump intake to within 2 feet of the water column and collect the sample. If sampling with a bailer, lower the bailer to the sampling level before filling.

10. (For pump and packer assembly only). Lower the assembly into the well so that the packer is positioned just above the screen or open section. Inflate the packer. Purge a volume equal to at least twice the screened interval (or unscreened open section volume below the packer) before sampling. Packers shall always be tested in a casing section above ground to determine proper inflation pressures for good sealing.

11. In the event that recovery time of the well is very slow (e.g., 24 hours or greater), sample collection can be delayed until the following day. If the well has been purged early in the morning, sufficient water may be standing in the well by the day's end to permit sample collection. If the well is incapable of producing a sufficient volume of sample at any time, take the largest quantity available and record this occurrence in the site logbook.

12. Fill sample containers; preserve and label as required (containers may be pre-preserved).

13. Replace the well cap and lock as appropriate. Make sure the well is readily identifiable as the source of the samples.

14. Process sample containers as described in SOP 4.

15. Decontaminate equipment as described in project planning documents.

Refer to MPCA sampling guidance provided in Appendix C of the RAMP for a detailed description of groundwater sampling.

6.0 REFERENCES

American Public Health Association, 1980. Standard Methods for the Examination of Water and Wastewater, 15th Edition, APHA, Washington, D.C.

Barcelona, M. J., J. P. Gibb and R. A. Miller, 1983. A guide to the Selection of Materials for Monitoring Well Construction and Groundwater Sampling. ISWS Contract Report 327, Illinois State Water Survey, Champaign, Illinois.

Johnson Division, UOP, Inc. 1975. Ground Water and Wells, A Reference Book for the Water Well Industry. Johnson Division, UOP, Inc., Saint Paul, Minnesota.

Nielsen, D. M. and G. L. Yeates, 1985. A Comparison of Sampling Mechanisms Available for Small-Diameter Ground Water Monitoring Wells. Ground Water Monitoring Review 5:83-98.

Scalf, M. R., J. F. McNabb, W. J. Dunlap, R. L. Crosby and J. Fryberger, 1981. Manual of Ground Water Sampling Procedures. R. S. Kerr Environmental Research Laboratory, Office of Research and Development, U.S. EPA, Ada, Oklahoma.

U.S. EPA, 1979. Methods for Chemical Analysis of Water and Wastes. EPA-600/4-79-020.

U.S. EPA, 1980. Procedures Manual for Ground Water Monitoring at Solid Waste Disposal Facilities. Office of Solid Waste, United States Environmental Protection Agency, Washington, D.C.

U.S. EPA, 1994. Groundwater Sampling Procedure - Low Flow Purge and Sampling (Draft Final). U.S. Environmental Protection Agency, Region I.

U.S. Geological Survey, 1984. National Handbook of Recommended Methods for Water Data Acquisition, Chapter 5: Chemical and Physical Quality of Water and Sediment. U.S. Department of the Interior, Reston, Virginia.

Minnesota Pollution Control Agency (MPCA), 1998. Risk Based Site Characterization and Sampling Guidance, Site Remediation Section, September.

SOP 4

SAMPLE HANDLING

1.0 PURPOSE

The purpose of this Standard Operating Procedure (SOP) is to provide information on sample preservation, packaging, and shipping procedures to be used in handling environmental samples submitted for chemical constituent, biological, or geotechnical analysis. Sample chain-of-custody procedures and other aspects of field documentation are addressed in SOP 5.

2.0 SCOPE

This procedure:

- Describes the appropriate containers to be used for samples depending on the analyses to be performed, and the steps necessary to preserve the samples when shipped off site for chemical analysis.

- Provides instruction for sample packaging and shipping in accordance with current U.S. Department of Transportation (DOT) regulations.

3.0 GLOSSARY

Hazardous Material - A substance or material which has been determined by the Secretary of Transportation to be capable of posing an unreasonable risk to health, safety, and property when transported in commerce, and which has been so designated. Under 49 CFR, the term includes hazardous substances, hazardous wastes, marine pollutants, and elevated temperature materials, as well as materials designated as hazardous under the provisions of §172.101 and §172.102 and materials that meet the defining criteria for hazard classes and divisions in Part 173.

Hazardous Waste - Any substance listed in 40 CFR 261, Subpart D, or otherwise characterized as ignitable, corrosive, reactive, or toxic (as defined by Toxicity Characteristic Leaching Procedure, TCLP, analysis) as specified under 40 CFR 261, Subpart C, that would be subject to manifest requirements specified in 40 CFR 262. Such substances are defined and regulated by EPA.

Marking - A descriptive name, identification number, instructions, cautions, weight, specification or UN marks, or combination thereof required on outer packaging of hazardous materials.

n.o.i - Not otherwise indicated (may be used interchangeably with n.o.s.).

n.o.s. - Not otherwise specified.

ORM - Other regulated material (see DOT 49 CFR 173.144).

Packaging - A receptacle and any other components or materials necessary for compliance with the minimum packaging requirements of 49 CFR 174, including containers (other than freight containers or overpacks), portable tanks, cargo tanks, tank cars, and multi-unit tank-car tanks to perform a containment function in conformance with the minimum packaging requirements of 49 CFR 173.24(a) & (b).

Placard - Color-coded, pictorial sign which depicts the hazard class symbol and name and which is placed on the side of a vehicle transporting certain hazardous materials.

Common Preservatives:

- Hydrochloric Acid - HCl
- Sulfuric Acid - H_2SO_4
- Nitric Acid - HNO_3
- Sodium Hydroxide - NaOH

Other Preservatives

- Zinc Acetate
- Sodium Thiosulfate - $Na_2S_2O_3$

Normality (N) - Concentration of a solution expressed as equivalent per liter, an equivalent being the amount of a substance containing 1 gram-atom of replaceable hydrogen or its equivalent. Thus, a one-molar solution of HCl, containing 1 gram-atom of H, is "one normal," whereas a one-molar solution of H_2SO_4, containing 2 gram-atoms of H, is "two normal."

Reportable Quantity (RQ) - For the purposes of this SOP, means the quantity specified in column 3 of the Appendix to DOT 49 CFR §172.101 for any material identified in column 1 of the appendix. A spill greater than the amount specified must be reported to the National Response Center.

Sample - A sample is physical evidence collected from a facility or the environment, which is representative of conditions at the location and time of collection.

4.0 RESPONSIBILITIES

Field Operations Leader - Directly responsible for the bottling, preservation, labeling, packaging, shipping, and custody of samples up to and including release to the shipper.

Field Samplers - Responsible for initiating the Chain-of-Custody Record (per SOP SA-6.3), implementing the packaging and shipping requirements, and maintaining custody of samples until they are relinquished to another custodian or to the common carrier.

5.0 PROCEDURES

Sample identification, labeling, documentation, and chain-of-custody are addressed by SOP SA-6.3.

5.1 Sample Containers

Different types of chemicals react differently with sample containers made of various materials. For example, trace metals adsorb more strongly to glass than to plastic, whereas many organic chemicals may dissolve various types of plastic containers. In general, the sample container shall allow approximately 5-10 percent air space ("ullage") to allow for expansion/vaporization if the sample warms during transport. However, for collection of volatile organic compounds, headspace shall be omitted. The analytical laboratory will generally provide certified-clean containers for samples to be analyzed for chemical constituents. Shelby tubes or other sample containers are generally provided by the driller for samples requiring geotechnical analysis. Sufficient lead time shall be allowed for a delivery of bottle orders. Therefore, it is critical to use the correct container to maintain the integrity of the sample prior to analysis.

Once opened, the container must be used at once for storage of a particular sample. Unused but opened containers are to be considered contaminated and must be discarded; because of the potential for introduction of contamination, they cannot be reclosed and saved for later use. Likewise, any unused containers which appear contaminated upon receipt, or which are found to have loose caps or a missing Teflon liner (if required for the container), shall be discarded.

5.2 Sample Preservation

Many water and soil samples are unstable and therefore require preservation to prevent changes in either the concentration or the physical condition of the constituent(s) requiring analysis. Although complete and irreversible preservation of samples is not possible, preservation does retard the chemical and biological changes that inevitably take place after the sample is collected. Preservation techniques are usually limited to pH control, chemical addition(s), and refrigeration/ freezing (certain biological samples only).

5.2.1 Overview

The preservation techniques to be used for various analytes are listed in project planning documents. Reagents required for sample preservation either will be added to the sample containers by the laboratory prior to their shipment to the field or be added in the field (in a clean environment). Only high purity reagents shall be used for preservation. In general, aqueous samples of low-concentration organics (or soil samples of low- or medium-concentration organics) are cooled to 4°C. Medium-concentration aqueous samples and high-hazard organics samples are typically not preserved. Low-concentration aqueous samples for metals are acidified with HNO_3, whereas medium-concentration and high-hazard aqueous metal samples are not preserved. Low- or medium-concentration soil samples for metals are cooled to 4°C, whereas high-hazard samples are not preserved.

The following subsections describe the procedures for preparing and adding chemical preservatives. Attachments A and B indicate the specific analytes that require these preservatives.

5.2.2 Preparation and Addition of Reagents

Addition of the following acids or bases may be specified for sample preservation; these reagents shall be analytical reagent (AR) grade or purer and shall be diluted to the required concentration with deionized water before field sampling commences. To avoid uncontrolled reactions, be sure to Add Acid to water (not vice versa). A dilutions guide is provided below.

Acid/Base	Dilution	Concentration	Estimated Amount Required for Preservation
Hydrochloric Acid (HCl)	1 part concentrated HCl: 1 part double-distilled, deionized water	6N	5-10 mL
Sulfuric Acid (H_2SO_4)	1 part concentrated H_2SO_4: 1 part double-distilled, deionized water	18N	2 - 5 mL
Nitric Acid (HNO_3)	Undiluted concentrated HNO_3	16N	2 - 5 mL
Sodium Hydroxide (NaOH)	400 grams solid NaOH dissolved in 870 mL double-distilled, deionized water; yields 1 liter of solution	10N	2 mL

The amounts required for preservation shown in the above table assumes proper preparation of the preservative and addition of the preservative to one liter of aqueous sample (assuming that the sample is initially at pH 7, is poorly buffered, and does not contain particulate matter; as these conditions vary, more preservative may be required). Consequently, the final sample pH must be checked using narrow-range pH paper, as described in the generalized procedure detailed below:

- Pour off 5-10 mL of sample into a dedicated, clean container. Use some of this sample to check the initial sample pH using wide range (0-14) pH paper. Never dip the pH paper into the sample; always apply a drop of sample to the pH paper using a clean stirring rod or pipette.

- Add about one-half of the estimated preservative required to the original sample bottle. Cap and invert gently several times to mix. Check pH (as described above) using medium range pH paper (pH 0-6 or pH 7.5-14, as applicable).

- Cap sample bottle and seal securely.

Additional considerations are discussed below:

- To test if ascorbic acid must be used to remove oxidizing agents present in the sample before it can be properly preserved, place a drop of sample on KI-starch paper. A blue color indicates the need for ascorbic acid addition.

  If required, add a few crystals of ascorbic acid to the sample and retest with the KI-starch paper. Repeat until a drop of sample produces no color on the KI-starch paper. Then add an additional 0.6 grams of ascorbic acid per each liter of sample volume.

  Continue with proper base preservation of the sample as described, generally, above.

- Samples for sulfide analysis must be treated by the addition of 4 drops (0.2 mL) of 2N zinc acetate solution per 100 ml of sample.

  The 2N zinc acetate solution is made by dissolving 220 grams of zinc acetate in 870 mL of double-distilled, deionized water to make 1 liter of solution.

  The sample pH is then raised to 9 using the NaOH preservative.

- To test of sodium thiosulfate must be added to remove residual chlorine from a sample, test the sample for residual chlorine using a field test kit especially made for this purpose.

  If residual chlorine is present, add 0.08 grams of sodium thiosulfate per liter of sample to remove the residual chlorine.

  Continue with proper acidification of the sample as described, generally, above.

For biological samples, 10% buffered formalin or isopropanol may also be required for preservation. Questions regarding preservation requirements should be resolved through communication with the laboratory <u>before</u> sampling begins.

5.3 <u>Field Filtration</u>

At times, field-filtration may be required to provide for the analysis of dissolved chemical constituents. Field-filtration must be performed <u>prior to</u> the preservation of samples as described above. General procedures for field filtration are described below:

- The sample shall be filtered through a non-metallic, 0.45-micron membrane filter, immediately after collection. The filtration system shall consist of dedicated filter canister, dedicated silicon tubing, and a peristaltic pump with pressure or vacuum pumping squeeze action (since the sample is filtered by mechanical peristalsis, the sample travels only through the tubing).

- To perform filtration, thread the silicon tubing through the peristaltic pump head. Attach the filter canister to the discharge end of the silicon tubing (note flow direction arrow); attach the aqueous sample container to the intake end of the silicon tubing. Turn the peristaltic pump on and perform filtration.

- Continue by preserving the filtrate (contained in the filter canister), as applicable and generally described above.

5.4 Sample Packaging and Shipping

Samples collected for shipment from a site shall be classified as either environmental or hazardous material samples. Samples from drums containing materials other than Investigative Derived Waste (IDW) and samples obtained from waste piles or bulk storage tanks are generally shipped as hazardous materials. A distinction must be made between the two types of samples in order to:

- Determine appropriate procedures for transportation of samples (if there is any doubt, a sample shall be considered hazardous and shipped accordingly.)

- Protect the health and safety of transport and laboratory personnel receiving the samples (special precautions are used by the shipper and at laboratories when hazardous materials are received.)

Detailed procedures for packaging environmental and hazardous material samples are outlined in the remainder of this section.

5.4.1 Environmental Samples

Environmental samples are packaged as follows:

- Place sample container, properly identified and with lid securely fastened in a plastic bag (e.g. Ziploc baggie), and seal the bag.

- Place sample in a cooler constructed of sturdy material that has been lined with a large, plastic (e.g. "garbage" bag).

- Pack with enough noncombustible, absorbent, cushioning materials such as vermiculite (shoulders of bottles must be iced if required) to minimize the possibility of the container breaking.

- If cooling is required, double-bag ice in Ziploc baggies and place around container shoulders and on top of absorbent packing material (minimum of 8 pounds of ice for a medium-size cooler). "Blue ice" may also be used.

- Seal (i.e., tape or tie top in knot) large liner bag.

- The original (top, signed copy) and extra carbonless copies of the COC form shall be placed inside a large Ziploc-type bag and taped inside the lid of the shipping cooler. If multiple coolers are sent but are included on one COC form, the COC form should be sent with the first cooler. The COC form should then state how many coolers are included with that shipment.

- Close and seal outside of cooler as described in SOP 5. Signed custody seals must be used.

Coolers must be marked as containing "Environmental Samples." The appropriate side of the container must be marked "This End Up" and arrows placed appropriately. No DOT marking or labeling is required; there are no DOT restrictions on mode of transportation.

5.4.2 Determination of Shipping Classification for Hazardous Material Samples

Samples not determined to be environmental samples, or samples known or expected to contain hazardous materials, must be considered hazardous material samples and transported according to the requirements listed below.

5.4.2.1 Known Substances

If the substance in the sample is known or can be identified, package, mark, label, and ship according to the specific instructions for that material (if it is listed) in the DOT Hazardous Materials Table, 49 CFR 172.101.

To determine the proper shipping name, use the following steps to help locate the shipping name on the Hazardous Materials Table, DOT 49 CFR 172.101.

1. Look first for the chemical or technical name of the material, for example, ethyl alcohol. Note that many chemicals have more than one technical name, for example, perchloroethylene (not listed in 172.101) is listed as tetrachloroethylene (listed 172.101). It may be useful to consult a chemist for all possible technical names a material can have. If your material is not listed by its technical name, then . . .

2. Look for the chemical family name. For example, pentyl alcohol is not listed but the chemical family name is: alcohol, n.o.s. (not otherwise specified). If the chemical family name is not listed, then . . .

3. Look for a generic name based on end use. For example, Paint, n.o.s or Fireworks, n.o.s. If a generic name based on end use is not listed, then . . .

4. Look for a generic family name based on end use, for example, drugs, n.o.s. or cosmetics, n.o.s. Finally, if your material is not listed by a generic family name but you suspect or know the material is hazardous because it meets the definition of one or more hazardous classes, then . . .

5. You will have to use the general hazard class for a proper shipping name. For example, Flammable Liquid, n.o.s, or Oxidizer, n.o.s.

5.4.2.2 Unknown Substances

For samples of hazardous substances of unknown content, select the appropriate transportation category according to the DOT hazardous materials classification of a material having more than one hazard. This procedure is outlined in DOT Regulation 49 CFR 173.2a.

The correct shipping classification for an unknown sample is selected through a process of elimination, as outlined in DOT Regulation 49 CFR 172.101(c)(11). By using the provisions in this paragraph, the proper shipping name and description will be determined. A step-by-step guide is provided by the Department of Transportation (DOT).

5.4.3 Packaging and Shipping of Samples Classified as Flammable Liquid (or Solid)

5.4.3.1 Packaging

Applying the word "flammable" to a sample does not imply that it is in fact flammable. The word prescribes the class of packaging according to DOT regulations.

1. Containerize sample as required. To prevent leakage, fill container no more than 90 percent full. Seal lid with teflon tape or wire.

2. Complete sample label and attach securely to sample container.

3. Seal container and place in 2-mil-thick (or thicker) polyethylene bag (e.g., Ziploc baggie), one sample per bag. Position sample identification label so that it can be read through bag. Seal bag.

4. For soil jars, place sealed bag inside metal can (available from laboratory or laboratory supplier) and cushion it with enough noncombustible, absorbent material (for example, vermiculite or diatomaceous

earth) between the bottom and sides of the can and bag to prevent breakage and absorb leakage. Pack one bag per can. Use clips, tape, or other positive means to hold can lid securely, tightly and permanently. Mark can as indicated in Paragraph 1 of Section 5.3.4.2, below. Single 1-gallon bottles do not need to be placed in metal cans.

5. Place one or more metal cans (or a single 1-gallon bottle) into a strong outside container, such as a metal picnic cooler or a DOT-approved fiberboard box. Surround cans (or bottle) with noncombustible, absorbent cushioning materials for stability during transport. The absorbent material should be able to absorb the entire contents of the container. Mark container as indicated in Paragraph 2 below.

5.4.3.2 Marking/Labeling

1. Use abbreviations only where specified. Place the following information, either hand-printed or in label form, on the metal can (or 1-gallon bottle):

   - Laboratory name and address.

   - Proper shipping name from the hazardous materials table (DOT Regulation CFR 49 172.101). Example: "Flammable Liquid, n.o.s. UN1993" or "Flammable Solid, n.o.s. UN1325." This will include packing group (see Section 5.3.4.2, No. 2.)

     Not otherwise specified (n.o.s) is not used if the flammable liquid (or solid) is identified. If identified, the name of the specific material is listed before the category (for example, Acetone, Flammable Liquid), followed by its appropriate UN number found in the DOT Hazardous Materials table (49 CFR 172.101).

2. Determine packing group. The packing group is part of the proper shipping name and must be included on the shipping papers in the description section.

   I. Most Hazardous
   II. Medium Hazard
   III. Least Hazardous

   The packing group will be listed in the hazardous materials table, column 5.

3. Place all information on outside shipping container as on can (or bottle), specifically:

   - Proper shipping name
   - UN or NA number
   - Proper label(s)
   - Addressee and sender

   Place the following labels on the outside shipping container: "Cargo Aircraft Only" and DOT label such as: "Flammable Liquid" (or "Flammable Solid"). "Dangerous When Wet" label shall be used if the Flammable Solid has not been exposed to a wet environment. "Laboratory Samples" and "THIS SIDE UP" or "THIS END UP" shall also be marked on the top of the outside container, and upward-pointing arrows shall be placed on all four sides of the container.

5.4.3.3 Shipping Papers

1. Use abbreviations only where specified. Complete the carrier-provided bill of lading and sign certification statement. Provide the following information in the order listed (one form may be used for more than one exterior container):

   - Proper shipping name. (Example: "Flammable Liquid, n.o.s. UN1993" or "Flammable Solid, n.o.s. UN1325 Packing Group I, II, III").

   - "Limited Quantity" (or "Ltd. Qty."). (See No. 3, below.)

   - "Cargo Aircraft Only."

   - Net weight (wt) or net volume (vol), just before or just after "Flammable Liquid, n.o.s." or "Flammable Solid, n.o.s.," by item, if more than one metal can is inside an exterior container.

   - "Laboratory Samples" (if applicable).

2. Include Chain-of-Custody Record, properly executed in outside container; use custody seals.

3. "Limited Quantity" means the maximum amount of a hazardous material for which there is a specific labeling or packaging exception (DOT CFR 49 171.8). This may mean that packages are exempted from labeling requirements. To determine if your sample meets the Limited Quantity Exception, refer to DOT Regulation CFR 49 Subpart C 173.50 through 173.156. First, determine the proper classification and shipping name for the material; then refer to the exception requirements for that particular class of material beginning with 173.50.

   Example: "Flammable Liquid n.o.s. UN1993 Packing Group 1." The outer package can weigh no more than 66 pounds gross weight. The inner package or container can weigh no more than 0.1 gallon net capacity for each container.

   To determine whether the material can be shipped as a "Limited Quantity," you must check the specific requirement for that class of material.

5.4.3.4 Transportation

1. The majority of unknown hazardous substance samples will be classified as flammable liquids. The samples will be transported by rented or common carrier truck, railroad, or express overnight package services. Do not transport samples on any passenger-carrying air transport system, even if the system has cargo-only aircraft. DOT regulations permit regular airline cargo-only aircraft, but difficulties with most suggest avoiding them. Instead, ship by airline carriers that carry only cargo. If unsure of what mode of transportation to use, consult the FOL or Project Manager.

2. For transport by government-owned vehicle, including aircraft, DOT regulations do not apply. However, procedures described above, with the exception of execution of the bill of lading with certification, shall still be followed.

3. In some cases, various materials may react if they break during shipment.

5.0 REFERENCES

American Public Health Association, 1981. Standard Methods for the Examination of Water and Wastewater, 15th Edition. APHA, Washington, D.C.

U.S. Department of Transportation, 1993. Hazardous Materials Regulations, 49 CFR 171-177.

U.S. EPA, 1984. "Guidelines Establishing Test Procedures for the Analysis of Pollutants under Clean Water Act." Federal Register, Volume 49 (209), October 26, 1984, p. 43234.

U.S. EPA, 1979. Methods for Chemical Analysis of Water and Wastes. EPA-600/4-79-020, U.S. EPA-EMSL, Cincinnati, Ohio.

SOP 5

FIELD DOCUMENTATION

1.0 PURPOSE

The purpose of this Standard Operating Procedure (SOP) is to identify and designate the field data record forms, logs and reports generally initiated and maintained for documenting field activities.

2.0 SCOPE

Documents presented within this procedure (or equivalents) shall be used for all field activities, as applicable. Other or additional documents may be required by specific client contracts.

3.0 GLOSSARY

None

4.0 RESPONSIBILITIES

Project Manager - The Project Manager is responsible for obtaining hardbound, controlled-distribution logbooks (from the appropriate source), as needed. In addition, the Project Manager is responsible for placing all forms used in site activities (i.e., records, field reports, and upon the completion of field work, the site logbook) in the project's central file.

Field Operations Leader (FOL) - The Field Operations Leader is responsible for ensuring that the site logbook, notebooks, and all appropriate forms and field reports illustrated in this guideline (and any additional forms required by the client) are correctly used, accurately filled out, and completed in the required time-frame.

5.0 PROCEDURES

5.1 Site Logbook

5.1.1 General

The site logbook is a hard-bound, paginated controlled-distribution record book in which all major onsite activities are documented. At a minimum, the following activities/events shall be recorded (daily) in the site logbook:

- All field personnel present
- Arrival/departure of site visitors
- Arrival/departure of equipment
- Start or completion of borehole/trench/monitoring well installation or sampling activities
- Daily onsite activities performed each day
- Sample pickup information
- Health and Safety issues (level of protection observed, etc.)
- Weather conditions

A site logbook shall be maintained for each project. The site logbook shall be initiated at the start of the first onsite activity (e.g., site visit or initial reconnaissance survey). Entries are to be made for every day that onsite activities take place. Upon completion of the fieldwork, the site logbook must become part of the project's central file.

The following information must be recorded on the cover of each site logbook:

- Project name
- Project number
- Sequential book number
- Start date
- End date

Information recorded daily in the site logbook need not be duplicated in other field notebooks (see Section 5.2), but must summarize the contents of these other notebooks and refer to specific page locations in these notebooks for detailed information (where applicable).

If measurements are made at any location, the measurements and equipment used must either be recorded in the site logbook or reference must be made to the site notebook in which the measurements are recorded.

All logbook, notebook, and log sheet entries shall be made in indelible ink (black pen is preferred). No erasures are permitted. If an incorrect entry is made, the data shall be crossed out with a single strike mark, and initialed and dated. At the completion of entries by any individual, the logbook pages used must be signed and dated. The site logbook must also be signed by the Field Operations Leader at the end of each day.

5.1.2 Photographs

When movies, slides, or photographs are taken of a site or any monitoring location, they must be numbered sequentially to correspond to logbook entries. The name of the photographer, date, time, site location, site description, and weather conditions must be entered in the logbook as the photographs are taken. A series entry may be used for rapid-sequence photographs. The photographer is not required to record the aperture settings and shutter speeds for photographs taken within the normal automatic exposure range. However, special lenses, films, filters, and other image-enhancement techniques must be noted in the logbook. If possible, such techniques shall be avoided, since they can adversely affect the admissibility of photographs as evidence. Chain-of-custody procedures depend upon the subject matter, type of film, and the processing it requires. Film used for aerial photography, confidential information, or criminal investigation requires chain-of-custody procedures. Adequate logbook notation and receipts must be compiled to account for routine film processing. Once processed, the slides of photographic prints shall be consecutively numbered and labeled according to the logbook descriptions. The site photographs and associated negatives must be docketed into the project's central file.

5.2 Site Notebooks

Key field team personnel may maintain a separate dedicated notebook to document the pertinent field activities conducted directly under their supervision. For example, on large projects with multiple investigative sites and varying operating conditions, the Health and Safety Officer may elect to maintain a separate site notebook. Where several drill rigs are in operation simultaneously, each site geologist assigned to oversee a rig must maintain a site notebook.

5.3 Sample Forms

Example forms are provided at the end of this SOP. Forms may be altered or revised for project-specific needs contingent upon client approval. Care must be taken to ensure that all essential information can be documented. Guidelines for completing these forms can be found in the related sampling SOP.

5.3.1 Sample Collection, Labeling, Shipment and Request for Analysis

5.3.1.1 Sample Log Sheet

Sample Log Sheets are used to record specified types of data while sampling. The data recorded on these sheets are useful in describing the waste source and sample as well as pointing out any problems encountered during sampling. A log sheet must be completed for each sample obtained, including field quality control (QC) samples.

5.3.1.2 Sample Label

Adhesive labels must be completed and applied to every sample container. Sample labels can usually be obtained from the appropriate Program source or are supplied from the laboratory subcontractor.

5.3.1.3 Chain-of-Custody Record Form

The Chain-of-Custody (COC) Record is a multi-part form that is initiated as samples are acquired and accompanies a sample (or group of samples) as they are transferred from person to person. This form must be used for any samples collected for chemical or geotechnical analysis whether the analyses are performed on site or off site. One part of the completed COC form is retained by the field crew while the other two or three portions are sent to the laboratory. The original (top, signed copy) and extra carbonless copies of the COC form shall be placed inside a large Ziploc-type bag and taped inside the lid of the shipping cooler. If multiple coolers are sent but are included on one COC form, the COC form should be sent with the first cooler. The COC form should then state how many coolers are included with that shipment. Once the samples are received at the laboratory, the sample cooler and contents are checked and any problems are noted on the enclosed COC form (any discrepancies between the sample labels and COC form and any other problems that are noted are resolved through communication between the laboratory point-of-contact and the Project Manager). The COC form is signed and one of the remaining two parts are retained by the laboratory while the last part becomes part of the samples' corresponding analytical data package. Internal laboratory chain-of-custody procedures are documented in the Laboratory Quality Assurance Plan (LQAP).

A checklist of information that is to be included on the example chain-of-custody form is provided below. Note that the actual form may differ slightly depending on the laboratory used.

- Project No. – Sampling contractor project number.
- Site Name – NIROP Fridley.
- Samples – Signatures of person(s) who collected the sample.
- Station No. – Sample Location.
- Date – Day, month, and year sample was collected.
- Time – Time of sample collection. Include a.m. or p.m. if not using 24-hour clock.
- Sample Station ID – Unique sample identification number.
- No. of Containers – Total number of bottles that are filled for each sample.
- Diagonal lines – Analyses requested and type of sample container (e.g., VOCs, 40-ml vial).
- Intersection of Station Location and Analyses Requested – Number of sample bottles for the analysis requested.
- Remarks (right side of form) – Write any pertinent comments here.
- Relinquished By – Sign and print name when relinquishing custody of the samples.
- Remarks (bottom of form) – Enter the overnight carrier air bill number.

5.3.1.4 Chain-of-Custody Seal

The Custody seal is also an adhesive-backed label. It is part of a chain-of-custody process and is used to prevent tampering with samples after they have been collected in the field and sealed in coolers for transit to the laboratory. The COC seals are signed and dated by the samplers and affixed across the opening

edges of each cooler containing environmental samples. COC seals may be available from the laboratory; these seals may also be purchased from a supplier.

5.3.2 Groundwater Level Measurement Sheet

A groundwater level measurement sheet must be filled out for each round of water level measurements made at a site.

5.3.3 Equipment Calibration and Maintenance Form

The calibration or standardization of monitoring, measuring or test equipment is necessary to assure the proper operation and response of the equipment, to document the accuracy, precision or sensitivity of the measurement, and determine if correction should be applied to the readings. Some items of equipment require frequent calibration, others infrequent. Some are calibrated by the manufacturer, others by the user.

Each instrument requiring calibration has its own Equipment Calibration Log which documents that the manufacturer's instructions were followed for calibration of the equipment, including frequency and type of standard or calibration device. An Equipment Calibration Log must be maintained for each electronic measuring device used in the field; entries must be made for each day the equipment is used.

TABLE OF CONTENTS

SECTION		PAGE
1.0	**VOLATILE ORGANICS BY GC/MS**	**2**
1.1	VOLATILES (SW-846 METHOD 8260B)	2
1.1.1	Applicability	2
1.1.2	Interferences	2
1.1.3	General Laboratory Practices	2
1.1.4	Sample Preparation	3
1.1.5	Data Overview Prior to Validation	3
1.1.6	Technical Evaluation Summary	3
1.1.7	Deliverables Guidance	6

1.0 VOLATILE ORGANICS BY GC/MS

1.1 Volatiles (SW-846 Method 8260B)

1.1.1 Applicability

SW-846 Method 8260B volatile methodology is used to determine organic compounds in most matrices including groundwater, sludges, caustic liquors, acid liquors, waste solvents, oily wastes, mousses, tars, fibrous wastes, polymeric emulsions, filter cakes, spent carbons, spent catalysts, soils, and sediments.

The CLP volatile Target Compound List (TCL) includes the following compounds:

Acetone
Benzene
Bromodichloromethane
Bromoform
Bromomethane
2-Butanone
Carbon Disulfide
Carbon Tetrachloride
Chlorobenzene
Chloroethane
Chloroform
Chloromethane
Cyclohexane
1,2-Dichlorobenzene
1,3-Dichlorobenzene
Trichlorofluoromethane
1,4-Dichlorobenzene
1,2-Dibromo-3-chloro-propane
Dibromochloromethane
Dichlorodifluoromethane
1,2-Dibromoethane
1,1-Dichloroethane
1,2-Dichloroethane
1,1-Dichloroethene
cis-1,2-Dichloroethene
trans-1,2-Dichloroethene
1,2-Dichloropropane
cis-1,3-Dichloropropene
trans-1,3-Dichloropropene
Ethyl Benzene
2-Hexanone
Isopropylbenzene
Methyl acetate
Methylcyclohexane
Methylene Chloride
4-Methyl-2-Pentanone
MTBE
Styrene
1,1,2,2-Tetrachloroethane
Tetrachloroethene
Toluene
1,1,2-Trichloro-1,2,2-Trifluoroethane
1,2,4-Trichlorobenzene
1,1,1-Trichloroethane
1,1,2-Trichloroethane
Trichloroethene
Vinyl Chloride
Xylenes (total)

1.1.2 Interferences

Samples can be contaminated by diffusion of volatile organics (particularly chlorofluorocarbons and methylene chloride) through the sample container septum during shipment and storage. Associated field quality control blanks are analyzed in order to monitor this.

Contamination by carryover can occur whenever high-level and low-level samples are sequentially analyzed. To reduce carryover, the sample syringe or purging device is rinsed with reagent water between samples. Whenever an unusually concentrated sample is encountered, it should be followed by an analysis of reagent water to check for cross contamination.

If sample or matrix interferences are encountered, a secondary or alternate analytical column may be used to resolve the compounds of interest.

1.1.3 General Laboratory Practices

A method blank consisting of organic free water spiked with surrogates and internal standards should be analyzed immediately following each daily calibration, and also after the analysis of every high concentration sample.

Matrix Spike/Matrix Spike Duplicate (MS/MSD) analyses should be conducted to determine the effects of sample matrix upon the compounds of interest.

1.1.4 Sample Preparation

A purge- and -trap procedure is performed to prepare and extract volatile compounds from samples and to introduce those compounds into the GC/MS.

For highly volatile matrices, direct injection preceded by dilution should be used to prevent gross contamination of the instrumentation. For pastes, dilution of the sample until it becomes free-flowing is used to ensure adequate interfacial area. The success of this method depends on the level of interferences in the sample; results may vary due to the large variability and complicated matrices of solid waste samples.

1.1.5 Data Overview Prior to Validation

Before commencing validation, the reviewer must preview the associated Chain-of-Custody (COC) reports to determine:

- If the appropriate numbers of samples are present in the data package and if each sample was correctly analyzed for the parameters and methods specified.
- The identity of all associated field quality control blanks and field duplicate pairs.

Because many samples may have required dilutions, re-extractions and/or re-analyses, the validator should preview the data package contents to determine which analyses represent the better quality data.

Unless specifically directed by client protocol, never annotate the laboratory data package. Before beginning evaluation, prepare working copies (i.e., photocopies) of all Form I reports (including those for samples, laboratory method blanks and MS/MSD analyses), and all laboratory quality control summary forms (including all initial and continuing calibration summary statistics).

1.1.6 Technical Evaluation Summary

All data evaluations must be conducted in accordance with the National Functional Guidelines for Organic Data Review (USEPA, 1999a) to the greatest extent practicable.

General parameters such as Data Completeness, Overall System Performance, Chromatographic Quality, and Detection Limits are evaluated concurrently with the parameters discussed in the following subsections.

1.1.6.1 Holding Times

Holding times are evaluated by reviewing the COC reports, the individual sample Form I reports, and the associated laboratory raw data. Holding times are calculated from date of collection to date of analysis.

For unpreserved aqueous samples, generally a 7-day maximum holding time allowance for aromatic compounds, along with a 14-day maximum holding time allowance for chlorinated hydrocarbons is used.

The technical maximum holding time allowance for aqueous samples preserved with hydrochloric acid (HCL) is 14 days.

A 14 day holding time for solid matrices is currently being used; 48 hours to methanol preservation for encore sampling devices.

Positive results in affected samples are generally qualified as estimated (J); non-detects (UJ). These results are biased low. If the holding times are exceeded by a factor of 2 or more, the holding time exceedance is considered to be gross, and positive results are generally qualified as estimated (J); non-detects are generally considered to be unreliable and are qualified (R). Results for which the holding time was grossly exceeded are biased very low.

1.1.6.2 Calibration

Check that an initial calibration was performed for each instrument used for analysis and that all calibrations were performed at all appropriate concentration levels within 12 hours of the associated instrument tuning.

Review the data package Form Vs (tuning) to ensure that the following ion abundance criteria are met:

Bromofluorobenzene (BFB)

m/z	ION ABUNDANCE CRITERIA
50	8.0-40.0% of m/z 95
75	30.0-66.0% of m/z 95
95	Base Peak, 100% relative abundance
96	5.0-9.0% of m/z 95
173	Less than 2.0% of m/z 174
174	50.0-120.0% of m/z 95
175	4.0-9.0% of m/z 174
176	93.0-101.0% of m/z 174
177	5.0-9.0% of m/z 176

Review initial calibration Form VIs and the associated laboratory raw data. Determine which compounds have average Relative Response Factors (RRFs) <0.050 and which compounds have Percent Relative Standard Deviations (%RSDs) >30%. Circle these noncompliance's on your working copies of these Forms. Spot-check (i.e., recalculate) a few of the RRFs and %RSDs to verify the laboratory's computation.

Determine which samples are affected by reviewing the continuing calibration Form VIIs. Check the initial calibration date(s) noted in the headings of the Form VIIs to determine which continuing calibrations are associated with which initial calibrations. Next, review the sample listings given on the data package Form Vs. Match the indicated continuing calibration run with the appropriate Form VII by matching the laboratory file ID numbers. Write the affected samples (those listed on the matched Form V) on your working copies of the appropriate Form VI and VII.

Review the continuing calibration Form VIIs and the associated laboratory raw data. Determine which compounds have RRFs <0.050 and which compounds have Percent Differences (%Ds) >25%; circle the noncompliance's on your working copies of these Forms. Spot-check (i.e., recalculate) a few of the RRFs and %Ds to verify the laboratory's computation.

Generally, affected positive results for compounds for which RRFs are <0.050 are qualified as estimated (J); non-detects are rejected (R). Bias for these results is very low.

Generally, positive results for compounds for which %RSD exceeds 30% or %D exceeds 25% are qualified as estimated (J); non-detects (UJ). Bias for these results cannot be determined.

Generally, positive results for compounds for which %RSD is between 30%-50% are qualified as estimated, (J). Qualification of non-detects is protocol-specific. Follow the rules given in the appropriate validation protocol.

1.1.6.3 Blank Contamination

When using the information given below, keep in mind that the validation action levels derived are sample specific and must be adjusted for dilution, sample aliquot used for analysis, and sample moisture content (when applicable).

The blank contamination review process is completed by first considering the maximum amount of a particular contaminant occurring in the laboratory method blanks. (Do not consider lab blanks run after high concentration samples for purposes of determining carryover as laboratory method blanks!) Then repeat the process for contaminants occurring in the associated field quality control blanks. Action levels for qualification (10X or 5X depending upon whether or not the contaminant is a common contaminant) are then set. The list of common contaminants consists of methylene chloride, acetone, and 2-butanone. The "B" flag should not be removed from the data. The following examples should be used to qualify data based on laboratory blanks and/or field quality blanks:

Example 1. Sample result is less than the 5X or 10X multiple of the blank result.

	10X	Rule	5X
Blank Result	7		7
CRQL	5		5
Sample Result	60B		30B
Final Sample Result	60BU		30BU

Example 2. Sample result is greater than the 5X or 10X multiple of the blank result.

	10X	Rule	5X
Blank Result	10		10
CRQL	5		5
Sample Result	120B		60B
Final Sample Result	120BJ		60BJ

1.1.6.4 Surrogates

Surrogates are evaluated by reviewing the laboratory data package Form II reports and the laboratory raw data. The quality control ranges are given on the laboratory data package Form IIs; circle any noncompliance's on your working copies of these Forms.

Results for all compounds in an affected sample are qualified if any one of the surrogate spike compounds fail to meet the quality control criteria provided. Samples having a surrogate recovery <10%, positive results are qualified as estimated (J), non-detects are rejected (R). These results are biased low. For samples having a surrogate recovery which is low but >10%, positive results are qualified as estimated (J); non-detects (UJ). For samples having a surrogate recovery which is high, positive results are qualified as estimated (J); non-detects are not qualified based on high surrogate recoveries.

1.1.6.5 Matrix Spike/Matrix Spike Duplicate (MS/MSD)

MS/MSD recoveries are evaluated by reviewing the laboratory data package Form III reports and the laboratory raw data. Samples with compounds that have recoveries outside the acceptance windows are qualified estimated (J) for those compounds. Samples with compounds that have recoveries less than 10

%, those compounds are qualified estimated (J) for positive results and rejected (R) for non-detected results. Qualification for that particular noncompliant compound is qualified in the original unspiked sample.

1.1.6.6 Internal Standards

Internal standards are evaluated by reviewing the data package Form VIIIs and the laboratory raw data. The quality control ranges are given on the Form VIIIs. Circle any noncompliance's on your working copies of these forms; evaluate and qualify as outlined below.

If an IS area count for a sample is less than 10 % of the area of the associated standard:

Positive results for compounds quantitated using that IS are qualified as estimated (J).

Non-detected compounds are rejected (R) as unusable.

If an IS area count for a sample is outside the -50% or +100% of the area for the associated standard:

Positive results for compounds quantitated using that IS are qualified as estimated (J).

Non-detected compounds quantitated using an IS area count less than 50% are reported at the sample quantitation limit and qualified estimated (UJ). Non-detected compounds quantitated using an IS area count greater than 100% are not qualified.

If an IS retention time is outside of the ±0.5 relative time units:

Non-detected compounds are rejected (R) as unusable. Positive results are not qualified if confirmed by mass spectra.

1.1.6.7 Field Duplicates

The relative percent difference (RPD) between field duplicate results for the aqueous matrix should be less than 35%; for soil matrix results, less than 50%. Qualification of the sample data is limited to the specific field duplicate pair. Positive results for compounds showing imprecision are qualified as estimated (J); non-detects (UJ). Bias for these results cannot be determined.

1.1.6.8 Target Compound Identification

The relative retention times (RRTs) must be within ±0.06 RRT units of the standard RRT.

Mass spectra of the sample compound and a current laboratory-generated standard must match according to the following criteria:

All ions present in the standard mass spectrum at a relative intensity greater than 10% must be present in the sample spectrum.

The relative intensities of these ions must agree within ±20% between the standard and sample spectra.

Ions present at greater than 10% in the sample mass spectrum but not present in the standard spectrum must be considered and accounted for.

The application of qualitative criteria for GC/MS analysis of target compounds requires professional judgment. It is up to the reviewer's discretion to obtain additional information from the laboratory. If it is determined that incorrect identifications were made, all such data are qualified as not detected (U) or rejected (R). Laboratory precision can be evaluated by comparing the unspiked sample results with MS/MSD analyses results for unspiked compounds. Consider non-detects and results reported at concentrations less than the Contract Required Quantitation Limit (CRQL) to be in agreement. Use professional judgment in determining whether to qualify sample results based on the comparison.

1.1.6.9 Other Considerations

Laboratory precision can be evaluated by comparing the unspiked sample results with MS/MSD analyses results for unspiked compounds. Consider non-detects and results reported at concentrations less than the Contract Required Quantitation Limit (CRQL) to be in agreement. Use professional judgment in determining whether to qualify sample results based on the comparison.

Data will be qualified according to the "Percent Solids" rule. For example, if a sediment sample contains <30% solids, all associated data are considered to be estimated and are qualified (J) and (UJ) accordingly.

1.1.6.10 Quantitation

Verify and record the quantitation of at least one compound per analytical fraction. If no positive results are reported, use the MS/MSD data to confirm proper computation by the laboratory. Validator and laboratory quantitations must agree within 10 %.

If verification of analytical results cannot be confirmed, the data reviewer must contact the laboratory in order to resolve quantitative variances.

1.1.7 Deliverables Guidance

In addition to the data validation memorandum and data summary spreadsheets, all laboratory data package quality control summary forms, sample Form I reports, method blank Form Is, and the Chain-of-Custody report must be given to the Data Validation Quality Assurance Officer (DV/QAO) for quality assurance review.

The validator should ensure that the format of the data validation deliverable is complete and correct (in accordance with the project specific requirements and/or laboratory technical specifications) and that the validation narrative is free of transcription and typographical errors before submitting all requested items for DV/QAO review.