N00210.AR.000297
NTC GREAT LAKES
5090.3a

QUARTERLY O&M SAMPLING REPORT FOR SUPPLYSIDE LANDFILL MONITORING WELLS NAVAL TRAINING CENTER GREAT LAKES, ILLINOIS

ENVIRONMENTAL JOB ORDER CONTRACT (EJOC)
BPA MASTER NUMBER N68950-03-3018
BPA CALL NUMBER 000301
GAS PROJECT NO. 2004-0187.00

Submitted to:

Department of the Navy
Naval Training Center – Environmental Department
Building 1-A, 201 Decatur Avenue
Great Lakes, Illinois 60088-5600

Submitted by:

Graef, Anhalt, Schloemer & Associates, Inc.
125 S. 84th Street, Suite 401
Milwaukee, Wisconsin 53214
(414) 259-1500

February, 2005

1.0 Introduction

Graef, Anhalt, Schloemer & Associates, Inc. has been retained by the Department of the Navy, Naval Facilities Engineering Command under BPA Master Number N68950-03-3018, BPA Call Number 000301 to furnish the labor, transportation, supervision, material, and equipment in connection with the sampling, analysis, and reporting for the Supplyside Landfill monitoring wells located at the Great Lakes Naval Training Center (GLNTC) in Great Lakes, Illinois. The work is performed on a quarterly basis for one year.

This report document's the activities related to the 2005 third quarter sampling event for the groundwater monitoring wells located at the Supplyside Landfill (Figure 1). The purpose of the sampling event is to report the current groundwater quality conditions at the Supplyside Landfill to the Department of the Navy.

2.0 Field Activities

On January 25, 2005, depths to the static groundwater level were measured in monitoring wells MW-A, MW-B, MW-D and MW-E at the Supplyside Landfill utilizing a water level probe. Monitoring well MW-C was removed and MW-F was damaged during construction activities and will need to be repaired or replaced. The probe was decontaminated prior to each measurement by washing it with an Alconox soap solution and rinsing it with deionized water.

Following the measurement of the depth to static groundwater, groundwater samples were collected from monitoring wells MW-A, MW-B, MW-D and MW-E. Groundwater samples could not be collected from monitoring wells MW-G due to a bent well casing. Prior to collecting the groundwater samples, the wells were purged of three well volumes of water utilizing single use disposable polyethylene bailers. Purging was conducted to ensure the collection of a representative groundwater sample. After allowing sufficient time for recharge, groundwater samples were collected and transferred from the bailers to the appropriate laboratory-supplied sample containers. Samples for metal analysis were collected last and were filtered in the field utilizing a disposable in-line filtration module (0.45 micron filter).

The groundwater sample containers were placed in a cooler with ice and shipped to Test America, Inc. located in Watertown, Wisconsin using standard United States Environmental Protection Agency (USEPA) protocols.

3.0 Laboratory Analysis

The groundwater samples collected from the Supplyside Landfill's groundwater monitoring were analyzed for the following constituents in accordance with the Illinois Environmental Protection Agency (IEPA) protocols:

- Iron by Method 236.1;
- Lead by Method 239.2;
- Manganese by Method 243.1;
- Ammonia by Method 5M4500 NHH;
- Chloride by Method 325.2;
- Phenol by Method 420.2;
- Sulfate by Method 300.0;
- Total Dissolved Solids (TDS) by Method 160.1;
- Total Organic Carbon (TOC) by Method 415.1; and
- pH by Method 150.1;

The historical and current laboratory analytical results for the groundwater samples are summarized in Table 1 through Table 6 and a copy of the current laboratory analytical report is attached to this report.

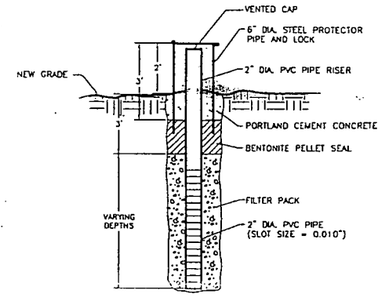

TYPICAL GROUND WATER MONITORING WELL CONSTRUCTION DETAIL

NOT TO SCALE

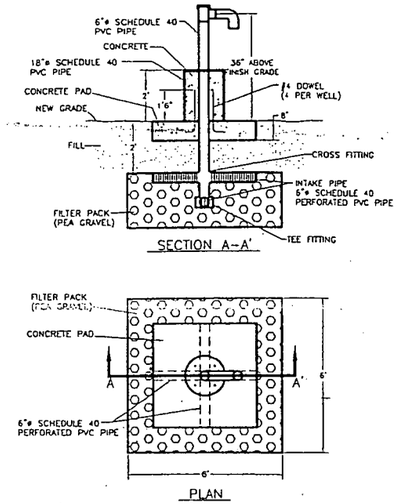

TYPICAL VENTILATION WELL CONSTRUCTION DETAIL

NOT TO SCALE

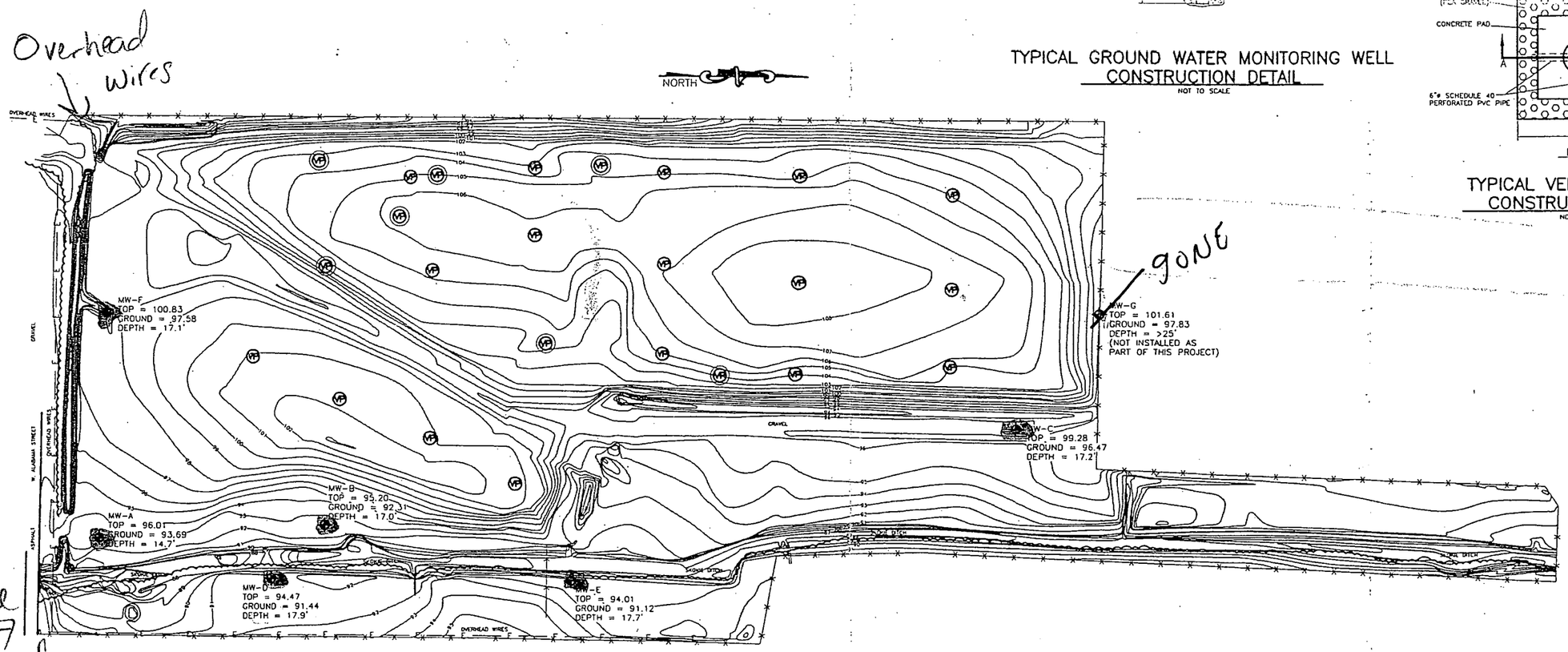

Front Entrance off Hwy 137 + Mississippi St.

SITE SURVEY

VENT PIPE – NEW

VENT PIPE – REPAIRED

MONITORING WELL

TREE LINE

Living Walls

APPROXIMATE SCALE – FEET

0 50 100

REV	DATE	DESCRIPTION	BY	APPROVED

TOLTEST INC.

United States Navy

SUBMITTED BY: TOLTEST, INC.	NAVAL TRAINING CENTER, GREAT LAKES, ILLINOIS
DESIGNED BY: G VOGELSONG	TITLE: MONITORING WELL LOCATIONS SUPPLY SIDE LANDFILL NAVAL TRAINING CENTER, GREAT LAKES, ILLINOIS
DRAWN BY: M. CIESLEWSKI	
CHECKED BY:	
APPROVED BY:	DATE: 26 JUN 02 / SCALE: NONE / DELIVERY ORDER NO:
ENGINEER	TOLTEST, INC. PROJECT NO: 42782.01 / DWG NO: 42782LW / SIZE: B / SHEET NO: 1 of 1

Table 1
Analytical Results for Monitoring Well-A
Quartely O&M Sampling for
Supplyside Landfill Monitoring Wells

Monitoring Well	Sampling Round	Amonia	Chloride	PH	Sulfate	TDS	TOC	Phenolics	Iron	Lead	Manganese
MW-A	7/16/2003	14	17	7.0	150	750	16	<0.0056	2.4	<0.0014	0.49
MW-A	10/29/2003	11	58	6.9	130	740	14	<0.0056	8.0	<0.0014	0.42
MW-A	1/29/2004	0.48	48	6.9	310	990	9.6	0.0025	<0.0042	<0.0014	0.55
MW-A	4/28/2004	1.2	22	6.7	170	800	9.6	0.0042	<0.042	<0.0014	0.35
MW-A	7/23/2004	6.9	13	6.7	120	700	18	0.0082	9.2	<0.0014	0.45
MW-A	11/1/2004	5	36	7.6	99	760	14	0.0032	8.8	<0.0014	0.43
MW-A	1/25/2005	<0.10	14	7.0	230	670	10	<0.0022	0.26	<0.0014	0.31
IEPA Groundwater Standards		N/A	200	6.5-8.5*	400	1,200	N/A	0.10	5	0.0075	0.15

Notes:
1. Concentrations are reported in milligrams per liter (mg/L).
2. Standards pertain to IEPA Class 1 Groundwater Quality Standards.
3. N/A - Not Applicable, IEPA or USEPA standards have not been established for these constituents.
4. * - Reported limit is fronm USEPA National Drinking Water Regulations since there is no IEPA standard.
5. Shaded = exceeded groundwater standard.

Table 1
Analytical Results for Monitoring Well-A
Quarterly O&M Sampling for
Supplyside Landfill Monitoring Wells

Monitoring Well	Sampling Round	Ammonia	Chloride	PH	Sulfate	TDS	TOC	Phenolics	Iron	Lead	Manganese
MW-A	Jul-99	12.8	55.2	6.9	50.8	683	22.8	<0.10	10.6	<0.001	0.53
	Oct-99	7.5	46.1	6.85	102	679	25.7	<0.10	4.25	<0.001	0.478
	Jan-00	8.86	47.9	6.91	112	414	13.5	0.27	1.01	0.003	0.517
	Apr-00	110	10.0	7.02	190	700	19.0	0.036	0.12	3.0	0.24
	Jul-00	0.40	4.94	7.0	50.5	717	34	<0.005	10.7	<5.00	0.642
	Oct-00	6.0	44.3	7.06	2.84	706	11	<0.005	9.98	<0.004	0.147
	Jan-01	13.9	61.2	7.01	12.6	778	12	<0.005	16.8	<5.00	0.883
	Apr-01	0.0336	53.2	7.0	135	823	15	<0.005	2.66	<0.004	1.02
	Jul-01	20.4	50.4	6.6	66.2	795	20	<0.1	17.6	<0.003	0.61
	Oct-01	14.0	12.1	6.76	106.0	509	16.0	<0.1	9.32	<0.171	0.53
	Jan-02	20.3	47.2	6.58	71	773	9	<0.005	20.3	<0.171	0.518
	Apr-02	31	35	6.8	92	780	14	<0.005	13,000	<1.0	520
	Jul-02	9.9	-	6.82	57	770	13	0.005	11	0.002	0.46
	Oct-02	17.0	63.0	7.01	110	740	13	0.005	25	0.002	0.51
	Jan-03	16.2	55	6.96	270	834	9.18	<0.005	11.8	<0.002	0.578
	Apr-03	Not Yet Sampled									
IEPA Groundwater Standards		N/A	200	6.5-8.5*	400	1,200	N/A	0.10	5	0.0075	0.15

Notes:
1. Concentrations are reported in milligrams per liter (mg/L).
2. Standards pertain to IEPA Class 1 Groundwater Quality Standards.
3. N/A – Not Applicable, IEPA or USEPA standards have not been established for these constituents.
4. * - Reported limit is from USEPA National Secondary Drinking Water Regulations since there is no IEPA standard.
5. Shaded = exceeds groundwater standard.

Table 1
Analytical Results for Monitoring Well-B
Quartely O&M Sampling for
Supplyside Landfill Monitoring Wells

Monitoring Well	Sampling Round	Amonia	Chloride	PH	Sulfate	TDS	TOC	Phenolics	Iron	Lead	Manganese
MW-B	7/16/2003	9.5	290	6.8	140	1,800	7.2	<0.0056	6.2	<0.0017	0.83
MW-B	10/29/2003	9.7	280	6.8	150	1,600	24	0.0062	6.5	0.0018	0.073
MW-B	1/29/2004	9.7	300	6.8	110	1,600	22	<0.0028	7.8	<0.0014	0.088
MW-B	4/28/2004	11	310	6.8	110	1,700	25	0.0037	7.5	<0.0014	0.091
MW-B	7/23/2004	9.9	380	6.8	120	1,800	27	0.0057	6.7	<0.0014	0.12
MW-B	11/1/2004	12	340	7.7	80	1,700	25	0.004	7.7	<0.0014	0.082
MW-B	1/25/2005	9.2	330	6.8	88	1,500	28	<0.0022	8.3	<0.0014	0.13
IEPA Groundwater Standards		N/A	200	6.5-8.5*	400	1,200	N/A	0.10	5	0.0075	0.15

Notes:
1. Concentrations are reported in milligrams per liter (mg/L).
2. Standards pertain to IEPA Class 1 Groundwater Quality Standards.
3. N/A - Not Applicable, IEPA or USEPA standards have not been established for these constituents.
4. * - Reported limit is fronm USEPA National Drinking Water Regulations since there is no IEPA standard.
5. Shaded = exceeded groundwater standard.

Table 2
Analytical Results for Monitoring Well-B
Quarterly O&M Sampling for
Supplyside Landfill Monitoring Wells

Monitoring Well	Sampling Round	Ammonia	Chloride	pH	Sulfate	TDS	TOC	Phenolics	Iron	Lead	Manganese
MW-B	Jul-99	5.5	254	7.02	122	<10.0	24.4	<0.10	5.85	<0.001	0.252
	Oct-99	6.38	331	6.93	161	1,340	38.8	<0.10	2.16	0.002	0.221
	Jan-00	4.95	425	6.93	147	1,470	25.8	<0.10	5.08	<0.001	0.163
	Apr-00	76	300	6.96	190	1,500	35	0.054	8.0	<3.0	0.32
	Jul-00	0.96	7.61	7.5	378	1,099	36	<0.005	8.36	<5.00	0.193
	Oct-00	10.8	152	7.14	8.82	1,800	19	38.1	5.21	<0.004	<0.0001
	Jan-01	5.60	292	6.97	9.98	1,630	28	0.0127	10.6	<5.00	0.117
	Apr-01	<0.0277	390	7.0	132	332	23	0.00794	8.87	<0.004	0.104
	Jul-01	8.7	360	6.64	127	1,560	21	<0.1	9.24	<0.003	0.145
	Oct-01	5.6	300	7.07	104	1,360	32	<0.1	8.86	<0.171	0.128
	Jan-02	97	382	6.62	113	1,500	20	0.01	9.44	<0.171	0.133
	Apr-02	2	200	6.7	160	1,500	23	<0.005	7,400	97	2.8
	Jul-02	8.7	-	6.87	150	1,700	21	0.005	3.9	0.002	0.11
	Oct-02	3.9	410	6.91	150	1,500	22	0.093	8	0.002	0.13
	Jan-03	18.6	360	6.90	330	1,410	16.6	<0.005	6.82	<0.002	0.129
	Apr-03	Not Yet Sampled									
IEPA Groundwater Standards		N/A	200	6.5-8.5*	400	1,200	N/A	0.10	5	0.0075	0.15

Notes:
1. Concentrations are reported in milligrams per liter (mg/L).
2. Standards pertain to IEPA Class 1 Groundwater Quality Standards.
3. N/A - Not Applicable, IEPA or USEPA standards have not been established for these constituents.
4. * - Reported limit is from USEPA National Secondary Drinking Water Regulations since there is no IEPA standard.
5. Shaded = exceeds groundwater standard.

Table 1
Analytical Results for Monitoring Well-C
Quartely O&M Sampling for
Supplyside Landfill Monitoring Wells

Monitoring Well	Sampling Round	Amonia	Chloride	PH	Sulfate	TDS	TOC	Phenolics	Iron	Lead	Manganese
MW-C	7/16/2003	9.5	74	6.8	260	1,300	5.1	<0.0056	0.065	<0.0014	0.12
MW-C	10/29/2003	<0.10	81	7.0	290	1,000	3.6	<0.0056	0.24	<0.0014	0.083
MW-C	1/29/2004	0.79	58	7.1	150	670	1.8	<0.0022	<0.042	<0.0014	0.045
MW-C	4/28/2004	0.27	80	6.9	300	1,100	2.5	<0.0022	<0.042	<0.0014	0.010
MW-C	7/23/2004	Well	damaged	no	Sample						
MW-C	11/1/2004	Well	damaged	no	Sample						
MW-C	1/25/2005	Well	damaged	no	Sample						
IEPA Groundwater Standards		N/A	200	6.5-8.5*	400	1,200	N/A	0.10	5	0.0075	0.15

Notes:
1. Concentrations are reported in milligrams per liter (mg/L).
2. Standards pertain to IEPA Class 1 Groundwater Quality Standards.
3. N/A - Not Applicable, IEPA or USEPA standards have not been established for these constituents.
4. * - Reported limit is fronm USEPA National Drinking Water Regulations since there is no IEPA standard.
5. Shaded = exceeded groundwater standard.

Table 3
Analytical Results for Monitoring Well-C
Quarterly O&M Sampling for
Supplyside Landfill Monitoring Wells

Monitoring Well	Sampling Round	Ammonia	Chloride	pH	Sulfate	TDS	TOC	Phenolics	Iron	Lead	Manganese
MW-C	Jul-99	0.14	138	7.28	342	1,150	5.5	<0.10	0.676	<0.001	0.19
	Oct-99	0.34	137	7.20	279	1,650	11.7	<0.10	<0.100	<0.001	0.170
	Jan-00	<0.10	175	7.26	291	1,040	5.5	<0.10	<0.100	<0.003	0.050
	Apr-00	48	150	7.19	380	1,100	5.6	0.078	0.21	<3	<0.10
	Jul-00	0.80	13.1	7.5	160	1,307	<9	<0.005	<0.0044	<5.00	<0.0001
	Oct-00	<0.0277	140	7.32	15.2	1,070	<6	<0.005	<0.0044	<0.004	<0.0001
	Jan-01	<0.0277	151	7.24	15.2	1,070	<9	<0.005	0.070	<5.00	<0.0001
	Apr-01	<0.0277	160	6.5	203	1,100	<6	<0.005	<0.0044	<0.004	<0.15
	Jul-01	<0.4	137	6.91	318	1,100	<6	<0.1	<0.075	<0.003	<0.042
	Oct-01	<0.4	123	7.48	340	1,160	<6	<0.1	<0.116	<0.171	<0.042
	Jan-02	<0.4	124	6.96	331	1,130	<6	<0.005	<0.116	<0.171	<0.042
	Apr-02	0.94	140	6.9	300	1,000	2.3	<0.005	<100	1.0	35
	Jul-02	0.08	-	7.06	300	1,100	3	0.005	0.25	0.002	0.07
	Oct-02	0.24	110	6.98	210	1,100	2.6	0.005	0.05	0.002	0.017
	Jan-03	2.38	100	7.08	340	1,000	3	<0.005	<0.05	<0.002	0.017
	Apr-03	Not Yet Sampled									
IEPA Groundwater Standards		N/A	200	6.5-8.5*	400	1,200	N/A	0.10	5	0.0075	0.15

Notes:
1. Concentrations are reported in milligrams per liter (mg/L).
2. Standards pertain to IEPA Class 1 Groundwater Quality Standards.
3. N/A – Not Applicable, IEPA or USEPA standards have not been established for these constituents.
4. * - Reported limit is from USEPA National Secondary Drinking Water Regulations since there is no IEPA standard.
5. Shaded = exceeds groundwater standard.

Table 1
Analytical Results for Monitoring Well-D
Quartely O&M Sampling for
Supplyside Landfill Monitoring Wells

Monitoring Well	Sampling Round	Amonia	Chloride	PH	Sulfate	TDS	TOC	Phenolics	Iron	Lead	Manganese
MW-D	7/16/2003	<0.10	36	6.9	100	690	3.9	<0.0064	0.050	<0.0014	0.18
MW-D	10/29/2003	<0.10	41	7.1	140	780	3.0	0.0076	0.15	<0.0014	0.23
MW-D	1/29/2004	0.79	58	7.1	150	670	1.8	<0.0022	<0.042	<0.0014	0.045
MW-D	4/28/2004	0.54	44	7.5	130	1,000	2.1	0.0081	<0.042	<0.0014	0.14
MW-D	7/23/2004	<0.10	43	7.0	120	710	6.5	0.0022	<0.042	<0.0014	0.10
MW-D	11/1/2004	0.1	40	7.8	110	640	2.7	<0.0022	0.069	<0.0014	0.10
MW-D	1/25/2005	<0.10	94	7.1	190	800	2.2	<0.0022	<0.042	<0.0014	0.032
IEPA Groundwater Standards		N/A	200	6.5-8.5*	400	1,200	N/A	0.10	5	0.0075	0.15

Notes:
1. Concentrations are reported in milligrams per liter (mg/L).
2. Standards pertain to IEPA Class 1 Groundwater Quality Standards.
3. N/A - Not Applicable, IEPA or USEPA standards have not been established for these constituents.
4. * - Reported limit is fronm USEPA National Drinking Water Regulations since there is no IEPA standard.
5. Shaded = exceeded groundwater standard.

Table 4
Analytical Results for Monitoring Well-D
Quarterly O&M Sampling for
Supplyside Landfill Monitoring Wells

Monitoring Well	Sampling Round	Ammonia	Chloride	pH	Sulfate	TDS	TOC	Phenolics	Iron	Lead	Manganese
MW-D	Jul-99	0.16	42.1	7.40	59.9	589	23.6	<0.10	<0.100	<0.001	0.214
	Oct-99	0.24	49.6	7.17	217	811	25.4	0.017	0.113	<0.001	0.119
	Jan-00	<0.10	38.1	7.20	286	1,130	9.5	0.20	0.399	<0.002	0.387
	Apr-00	44	90	7.15	310	940	3.7	<0.005	1.1	<3.0	0.77
	Jul-00	0.30	13.1	7.5	125	1,110	6	<0.005	0.580	<5.00	0.662
	Oct-00	<0.0277	74.5	7.26	11.3	1,019	<6	<0.005	0.592	<0.004	0.234
	Jan-01	<0.0277	50.5	7.30	8.09	3,000	<9	<0.005	1.21	<5.00	0.327
	Apr-01	<0.0277	31.9	7.0	58.1	429	<6	0.0381	1.78	<0.004	0.388
	Jul-01	0.8	61	7.03	92.8	602	<6	<0.1	0.61	<0.003	1.04
	Oct-01	<0.4	14.8	7.22	19.8	399	<6	<0.1	0.259	<0.171	0.054
	Jan-02	<0.4	39.2	7.04	52.6	515	<6	<0.005	1.36	<0.171	0.486
	Apr-02	0.92	30	7.0	110	490	1.7	0.002	260	<1.0	250
	Jul-02	0.05	-	-	-	-	-	-	0.05	0.002	0.13
	Oct-02	0.26	48	7.01	140	770	2	0.005	0.048	0.002	0.39
	Jan-03	0.970	55	7.16	630	658	2.8	<0.005	<0.05	0.00739	0.257
	Apr-03	Not Yet Sampled									
IEPA Groundwater Standards		N/A	200	6.5-8.5*	400	1,200	N/A	0.10	5	0.0075	0.15

Notes:
1. Concentrations are reported in milligrams per liter (mg/L).
2. Standards pertain to IEPA Class 1 Groundwater Quality Standards.
3. N/A - Not Applicable, IEPA or USEPA standards have not been established for these constituents.
4. * - Reported limit is from USEPA National Secondary Drinking Water Regulations since there is no IEPA standard.
5. Shaded = exceeds groundwater standard.

Table 1
Analytical Results for Monitoring Well-E
Quartely O&M Sampling for
Supplyside Landfill Monitoring Wells

Monitoring Well	Sampling Round	Amonia	Chloride	PH	Sulfate	TDS	TOC	Phenolics	Iron	Lead	Manganese
MW-E	7/16/2003	<0.10	26	6.9	64	690	2.9	<0.0056	0.83	<0.0014	0.19
MW-E	10/29/2003	<0.10	44	7.2	72	530	2.4	0.0083	0.95	<0.0014	0.23
MW-E	1/29/2004	<0.10	34	7.1	63	510	2.3	<0.0022	0.85	<0.0014	0.19
MW-E	4/28/2004	0.24	32	7.2	57	750	2.3	0.0031	0.35	<0.0014	0.18
MW-E	7/23/2004	<0.10	29	7.0	70	560	4.2	0.0046	0.33	<0.0014	0.16
MW-E	11/1/2004	0.18	49	7.9	51	550	2.9	<0.0022	0.83	<0.0014	0.21
MW-E	1/25/2005	<0.10	32	7.1	54	440	2.5	<0.0022	<0.042	<0.0014	0.10
IEPA Groundwater Standards		N/A	200	6.5-8.5*	400	1,200	N/A	0.10	5	0.0075	0.15

Notes:
1. Concentrations are reported in milligrams per liter (mg/L).
2. Standards pertain to IEPA Class 1 Groundwater Quality Standards.
3. N/A - Not Applicable, IEPA or USEPA standards have not been established for these constituents.
4. * - Reported limit is fronm USEPA National Drinking Water Regulations since there is no IEPA standard.
5. Shaded = exceeded groundwater standard.

Table 5
Analytical Results for Monitoring Well-E
Quarterly O&M Sampling for
Supplyside Landfill Monitoring Wells

Monitoring Well	Sampling Round	Ammonia	Chloride	pH	Sulfate	TDS	TOC	Phenolics	Iron	Lead	Manganese
MW-E	Jul-99	0.14	20.4	7.38	45.9	530	5.5	<0.10	0.478	<0.001	0.328
	Oct-99	0.24	40.8	7.27	61.3	<10.0	24.0	0.31	0.909	<0.001	0.332
	Jan-00	<0.10	136	7.34	65.2	652	5.8	0.32	0.788	<0.001	<0.001
	Apr-00	53	35	7.26	130	450	4.0	0.042	0.71	<3.0	0.17
	Jul-00	0.40	2.63	7.5	19.5	240	13	<0.005	3.67	<5.00	1.66
	Oct-00	<0.0277	23.0	7.41	4.73	518	<6	<0.005	0.619	<0.004	<0.0001
	Jan-01	<0.0277	37.2	7.31	5.78	529	<3	<0.005	0.878	<5.00	0.169
	Apr-01	<0.0277	31.0	7.0	81.7	488	<6	0.0984	1.09	<0.004	0.270
	Jul-01	0.6	26.6	7.0	54.5	489	<3	<0.1	0.841	<0.003	0.194
	Oct-01	0.6	14.4	7.27	45.6	352	7	7.27	<0.116	<0.171	<0.042
	Jan-02	<0.4	23.8	6.98	50.3	469	<6	<0.005	1.54	<0.171	0.166
	Apr-02	1.5	30	7.0	290	470		<0.171	560	<1.0	180
	Jul-02	0.17	-	7.11	72	750	2.4	0.005	0.84	0.002	0.25
	Oct-02	1.2	31	7.04	120	550	2	0.0035	0.88	0.002	0.22
	Jan-03	1.51	35	7.22	300	544	2.4	<0.005	1.2	<0.002	0.298
	Apr-03	Not Yet Sampled									
IEPA Groundwater Standards		N/A	200	6.5-8.5*	400	1,200	N/A	0.10	5	0.0075	0.15

Notes:
1. Concentrations are reported in milligrams per liter (mg/L).
2. Standards pertain to IEPA Class 1 Groundwater Quality Standards.
3. N/A – Not Applicable, IEPA or USEPA standards have not been established for these constituents.
4. * - Reported limit is from USEPA National Secondary Drinking Water Regulations since there is no IEPA standard.
5. Shaded = exceeds groundwater standard.

Table 1
Analytical Results for Monitoring Well-F
Quartely O&M Sampling for
Supplyside Landfill Monitoring Wells

Monitoring Well	Sampling Round	Amonia	Chloride	PH	Sulfate	TDS	TOC	Phenolics	Iron	Lead	Manganese
MW-F	7/16/2003	0.40	10	7.0	180	760	6.4	<0.0056	0.48	<0.0014	0.38
MW-F	10/29/2003	2.2	16	6.9	180	740	8.4	<0.0056	5.3	<0.0014	1.3
MW-F	1/29/2004	0.64	23	7.1	360	1,200	9.4	<0.0066	1.4	<0.0014	0.81
MW-F	4/28/2004	0.89	21	7.0	330	1,100	7	0.0028	<0.042	<0.0014	0.19
MW-F	7/23/2004	Well	damaged	no	sample						
MW-F	11/1/2004	Well	damaged	no	sample						
MW-F	1/25/2005	Well	damaged	no	sample						
IEPA Groundwater Standards		N/A	200	6.5-8.5*	400	1,200	N/A	0.10	5	0.0075	0.15

Notes:
1. Concentrations are reported in milligrams per liter (mg/L).
2. Standards pertain to IEPA Class 1 Groundwater Quality Standards.
3. N/A - Not Applicable, IEPA or USEPA standards have not been established for these constituents.
4. * - Reported limit is fronm USEPA National Drinking Water Regulations since there is no IEPA standard.
5. Shaded = exceeded groundwater standard.

Table 6
Analytical Results for Monitoring Well-F
Quarterly O&M Sampling for
Supplyside Landfill Monitoring Wells

Monitoring Well	Sampling Round	Ammonia	Chloride	pH	Sulfate	TDS	TOC	Phenolics	Iron	Lead	Manganese
MW-F	Jul-99	1.93	18.7	7.13	129	750	22.6	<0.10	1.58	<0.001	1.5
	Oct-99	3.13	21.3	7.02	470	1,170	38.4	<0.10	2.68	<0.001	1.47
	Jan-00	2.13	32.8	7.42	688	1,540	21.2	0.29	0.271	<0.001	0.894
	Apr-00	77	10	7.13	290	1,100	11	0.078	0.11	<3.0	<0.10
	Jul-00	2.80	9.98	7.5	12.4	854	17	<0.005	0.663	<5.00	0.210
	Oct-00	<0.0277	24.8	7.21	15.2	1,063	<6	86.4	0.685	<0.004	0.372
	Jan-01	<0.0277	17.7	7.28	9.98	85.0	<3	<0.005	0.027	<5.00	<0.0001
	Apr-01	<0.0277	15.1	7.0	162	675	<6	0.171	0.101	<0.004	0.077
	Jul-01	2	60.2	6.78	142	735	10	<0.1	0.153	<0.003	0.722
	Oct-01	0.4	20.8	7.44	130	465	8	<0.1	<0.116	<0.171	<0.042
	Jan-02	1.8	34.7	6.88	249	880	<6	<0.005	2.15	<0.171	0.683
	Apr-02	1.9	36	6.9	310	860	5.9	0.011	200	<1.0	370
	Jul-02	1.6	-	7.01	250	840	7.0	0.005	1.0	0.002	1.0
	Oct-02	1.8	19	6.98	210	820	7.9	0.005	4.2	0.002	1.2
	Jan-03	2.43	20	7.05	330	996	6.14	<0.005	4.41	<0.002	1.57
	Apr-03	Not Yet Sampled									
IEPA Groundwater Standards		N/A	200	6.5-8.5*	400	1,200	N/A	0.10	5	0.0075	0.15

Notes:
1. Concentrations are reported in milligrams per liter (mg/L).
2. Standards pertain to IEPA Class 1 Groundwater Quality Standards.
3. N/A - Not Applicable, IEPA or USEPA standards have not been established for these constituents.
4. * - Reported limit is from USEPA National Secondary Drinking Water Regulations since there is no IEPA standard.
5. Shaded = exceeds groundwater standard.

GRAEF ANHALT SCHLOEMER and Associates Inc.

FIELD WATER QUALITY SAMPLING AND ANALYSIS LOG

PROJECT: Great Lakes Naval Base
PROJECT NO.: 20040187
LOCATION: Great Lakes Naval Base
LABORATORY: Test America
DATE SENT: 1/26/2005

INSTRUMENT IDENTIFICATION:
TEMPERATURE: KIT #1
CONDUCTIVITY: KIT #1
pH: KIT #1
PUMP: NA

SAMPLE LOCATION	MW-A	MW-B	MW-C	MW-D	MW-E
TYPE	Monitoring well	Monitoring well	Monitoring well	Monitoring well	Monitoring well
DATE/TIME	1/25/2005 12:10	1/25/2005 11:15	1/25/2005 0:00	1/25/2005 10:15	1/25/2005 9:20
WELL DEPTH (FT.)	14.70	17.00	17.20	17.90	17.70
DEPTH TO GW (FT.)	9.15	8.30		7.30	7.16
WATER COLUMN (FT.)	5.55	8.70		10.60	10.54
WELL VOLUME (GAL)	0.89	1.40		1.70	1.69
CALC. PURGE VOL. (GAL)	3.56	5.60		6.80	6.76
ACT. VOL. PURGED (GAL.)	3.75	6.00		7.00	7.00
MP ELEV. (FT. MSL)	676.92	676.11	680.19	675.38	674.92
GW ELEV. (FT. MSL)	667.77	667.81		668.08	667.76
SAMPLING DEVICE	Disposable Bailer	Disposable Bailer		Disposable Bailer	Disposable Bailer
TEMPERATURE (°C)	8.1	8.5		8.2	8.0
CONDUCTIVITY (µS/cm)					
(mS/cm)	0.690	1.805		0.890	0.538
pH	7.44	7.23		7.60	7.56
DISSOLVED OXYGEN (ppm)					
REDOX (mV)	-23.8	-13.1		-32.2	-31.7
COLOR	Light Gray	Light Brown		Light Brown	Light Brown
ODOR	None Noticed	Iron		None Noticed	None Noticed
CLARITY	Slightly Cloudy	Slightly Cloudy		Slightly Cloudy	Slightly Cloudy
SAMPLING PARAMETERS :	NO. OF CONTAINERS & CONTAINER TYPE VOA, PLASTIC, AMB BTL PRESERVATIVE TYPE FILTERED OR UNFILTERED				
Phenols	1-ltr amber, H2SO4, ice	1-ltr amber, H2SO4, ice		1-ltr amber, H2SO4, ice	1-ltr amber, H2SO4, ice
TOC	250 ml plastic, H2SO4, ice	250 ml plastic, H2SO4, ice		250 ml plastic, H2SO4, ice	250 ml plastic, H2SO4, ice
Ammonia as N	1-ltr plastic, H2SO4, ice	1-ltr plastic, H2SO4, ice		1-ltr plastic, H2SO4, ice	1-ltr plastic, H2SO4, ice
Fe, Mn, Pb	1 250 ml plastic, HNO3, field filtered, ice	1 250 ml plastic, HNO3, field filtered, ice		1 250 ml plastic, HNO3, field filtered, ice	1 250 ml plastic, HNO3, field filtered, ice
Chloride, PH, TDS, Sulfate	1 ltr plastic, ice	1 ltr plastic, ice		1 ltr plastic, ice	1 ltr plastic, ice
SAMPLED BY:	EGD	EGD	EGD	EGD	EGD
REMARKS :	Fair recharge.	Fair recharge.	Well damaged during capping work on landfill. Will need to be replaced.	Fair recharge.	Fair recharge.

WSL1-05A.XLS

GRAEF ANHALT SCHLOEMER and Associates Inc.

FIELD WATER QUALITY SAMPLING AND ANALYSIS LOG

PROJECT: Great Lakes Landfill
PROJECT NO.: 20040187
LOCATION: Great Lakes Naval Base
LABORATORY: Test America
DATE SENT: 1/25/2005

INSTRUMENT IDENTIFICATION:
TEMPERATURE: KIT #1
CONDUCTIVITY: KIT #1
pH: KIT #1
PUMP: NA

SAMPLE LOCATION	MW-F				
TYPE	Monitoring well				
DATE/TIME	1/25/2005 0:00				
WELL DEPTH (FT.)	17.10				
DEPTH TO GW (FT.)					
WATER COLUMN (FT.)					
WELL VOLUME (GAL)					
CALC. PURGE VOL. (GAL)					
ACT. VOL. PURGED (GAL.)					
MP ELEV. (FT. MSL)	681.74				
GW ELEV. (FT. MSL)	681.74	0.00	0.00	0.00	0.00
SAMPLING DEVICE					
TEMPERATURE (°C)					
CONDUCTIVITY (µS/cm)					
(mS/cm)					
pH					
DISSOLVED OXYGEN (ppm)					
REDOX (mV)					
COLOR					
ODOR					
CLARITY					
SAMPLING PARAMETERS :	NO. OF CONTAINERS & CONTAINER TYPE - VOA, PLASTIC, AMB. BTL PRESERVATIVE TYPE - FILTERED OR UNFILTERED				
Ammonia					
Chloride/ Sulfate/ TDS/ PH					
TOC					
Iron / Manganese / Lead					
Phenols					
SAMPLED BY:	EGD				
REMARKS :	Well damaged during construction. Bent cant get a bailer down it. Well could be repaired.				

WSL 1 05 B.XLS

Sampling Date: 1/25/2005

Well	A	B	C	D	E	F
Well Top	96.01	95.2	99.28	94.47	94.01	100.83
Ground Surface	93.69	92.31	96.47	91.44	91.12	97.58
Well Depth	14.7	17	17.2	17.9	17.7	17.1
Stickup	2.32	2.89	2.81	3.03	2.89	3.25
Depth to Water	**9.15**	**8.3**	**NA**	**7.3**	**7.16**	**NA**
Well Elevation	676.92	676.11	680.19	675.38	674.92	681.74
Ground Water Elevation	**667.77**	**667.81**	**#VALUE!**	**668.08**	**667.76**	**#VALUE!**
Bottom Elevation	**662.22**	**659.11**	**662.99**	**657.48**	**657.22**	**664.64**
Temperature (Degrees C)	**8.1**	**8.5**	**NA**	**8.2**	**8.0**	**NA**
Conductivity (mS/cm)	**0.690**	**1.805**	**NA**	**0.890**	**0.538**	**NA**
Depth To Water (bgs)	**6.83**	**5.41**	**#VALUE!**	**4.27**	**4.27**	**#VALUE!**

ILLINOIS ENVIRONMENTAL PROTECTION AGENCY
DIVISION OF LAND POLLUTION CONTROL
CHEMICAL ANALYSIS FORM

RECORD CODE: L P C S M 0 1 (1–7) TRANS CODE: A (8)

REPORT DUE DATE ___/___/___ (36 M D Y 41)

FEDERAL ID NUMBER _____

SITE INVENTORY NUMBER 0 9 7 8 1 1 0 0 0 2 (9–18)

MONITOR POINT NUMBER (see Instructions) M W - A (19–22)

REGION 5 CO. GREAT LAKES

DATE COLLECTED 01/25/05 (23 M D Y 28)

FACILITY NAME US NAVAL BASE # 2

FOR IEPA USE ONLY

LAB ____ (29)

DATE RECEIVED ___/___/___ (42 M D Y 47)

BACKGROUND SAMPLE (X) ____ (54)

TIME COLLECTED (24 Hr. Clock) 1 2 : 1 0 (55 H M 58)

UNABLE TO COLLECT SAMPLE (see Instructions) ____ (59)

MONITOR POINT SAMPLED BY (see Instructions) X (60) EGD OTHER (SPECIFY)

SAMPLE FIELD FILTERED — INORGANICS (X) X (61) ORGANICS (X) ____ (62)

SAMPLE APPEARANCE (63–102): LIGHT GRAY CLOUDY

COLLECTOR COMMENTS (103–142): NONE

LAB COMMENTS (150–199): NONE

RECORD CODE L P C S M 0 2 (1–7) TRANS CODE A (8) (COLUMNS 9-29 FROM ABOVE)

	FIELD MEASUREMENTS CONSTITUENT DESCRIPTION AND REQUIRED UNIT OF MEASURE	STORET NUMBER (30–34)	Remarks See Inst. (35)	Replicate (36)	< or > (37)	VALUE (38–47)
Q	TEMP OF WATER (unfiltered °F)	00011				46.5
Q	SPEC COND (unfiltered umhos)	00094				690.
Q	pH (unfilted units)	00400				7.44
Q	ELEV OF GW SURF (ft ref MSL)	71993				667.77
Q	DEPTH OF WATER (ft below LS)	72019				9.15
A	BTM WELL ELEV (ft ref MSL)	72020				662.22
Q	DEPTH TO WATER FR MEA PT (ft)	72109				9.15

IEPA/DLPC

CHEMICAL ANALYSIS FORM

RECORD CODE | L | P | C | S | M | 0 | 2 | (1–7) TRANS CODE | A | (8)

SITE INVENTORY NUMBER 0 9 7 8 1 1 0 0 0 2 (9–18)

CO. GREAT LAKES REGION #5

US NAVAL BASE #2

FACILITY NAME

MONITOR POINT NUMBER M W-A (19–22)

DATE COLLECTED 0 1 / 2 5 / 0 5 (23–28: M D Y)

LAB TEST AMERICA (29)

	LAB MEASUREMENTS CONSTITUENT DESCRIPTION AND REQUIRED UNIT OF MEASURE	STORET NUMBER (30–34)	Remarks See Inst. (35)	Replicate (36)	< or > (37)	VALUE (38–47)
	N-AMMONIA (MG/L)	00608				<0.10
	CHLORIDE (MG/L)	00941				14.
	SULFATE (MG/L)	00946				230.
	TDS (MG/L)	70300				670.
	TOC (MG/L)	00680				10.
	PHENOLICS (MG/L)	32730				<0.0022
	IRON (MG/L)	01046				0.26
	LEAD (MG/L)	01049				<0.0014
	MANGANESE (MG/L)	01056				0.31

All analytical procedures must be performed in accordance with the methods contained in "Test Methods for Evaluating Solid Wastes, Physical/Chemical Methods," SW-846, 3rd Edition, September 1986 or equivalent methods approved by the Agency. Proper sample chain of custody control and quality assurance/quality control procedures must be maintained in accordance with the facility sampling and analysis plan.

Only Keypunch with Data in Column 35 or Columns 38-47

Printed on Recycled Paper

ILLINOIS ENVIRONMENTAL PROTECTION AGENCY
DIVISION OF LAND POLLUTION CONTROL
CHEMICAL ANALYSIS FORM

RECORD CODE: L P C S M 0 1 (1–7) TRANS CODE: A (8)

REPORT DUE DATE ___/___/___ (36 M D Y 41)

FEDERAL ID NUMBER _____

SITE INVENTORY NUMBER 0 9 7 8 1 1 0 0 0 2 (9–18)

MONITOR POINT NUMBER (see Instructions) M W - B (19–22)

REGION 5 CO. GREAT LAKES

DATE COLLECTED 01/25/01 (23 M D Y 28)

FACILITY NAME US NAVAL BASE # 2

FOR IEPA USE ONLY

LAB ____ (29)

DATE RECEIVED ___/___/___ (42 M D Y 47)

BACKGROUND SAMPLE (X) ____ (54)

TIME COLLECTED (24 Hr. Clock) 1 1 : 1 5 (55 H M 58)

UNABLE TO COLLECT SAMPLE (see Instructions) ____ (59)

MONITOR POINT SAMPLED BY (see Instructions) X (60) EGD OTHER (SPECIFY)

SAMPLE FIELD FILTERED — INORGANICS (X) X (61) ORGANICS (X) ____ (62)

SAMPLE APPEARANCE (63–102): LIGHT BROWN CLOUDY

COLLECTOR COMMENTS (103–142): NONE

LAB COMMENTS (150–199): NONE

RECORD CODE L P C S M 0 2 (1–7) TRANS CODE A (8) (COLUMNS 9-29 FROM ABOVE)

	FIELD MEASUREMENTS CONSTITUENT DESCRIPTION AND REQUIRED UNIT OF MEASURE	STORET NUMBER (30–34)	Remarks See Inst. (35)	Replicate (36)	< or > (37)	VALUE (38–47)
Q	TEMP OF WATER (unfiltered °F)	00011				47.3
Q	SPEC COND (unfiltered umhos)	00094				1805.
Q	pH (unfilted units)	00400				7.23
Q	ELEV OF GW SURF (ft ref MSL)	71993				667.81
Q	DEPTH OF WATER (ft below LS)	72019				5.41
A	BTM WELL ELEV (ft ref MSL)	72020				659.11
Q	DEPTH TO WATER FR MEA PT (ft)	72109				8.30

IEPA/DLPC

CHEMICAL ANALYSIS FORM

RECORD CODE | L | P | C | S | M | 0 | 2 | (1–7) TRANS CODE | A | (8)

SITE INVENTORY NUMBER 0 9 7 8 1 1 0 0 0 2 (9–18)

MONITOR POINT NUMBER M W-B (19–22)

CO. GREAT LAKES REGION #5

DATE COLLECTED 0 1 / 2 5 / 0 5 (23 M D Y 28)

US NAVAL BASE #2
FACILITY NAME

LAB TEST AMERICA (29)

	LAB MEASUREMENTS CONSTITUENT DESCRIPTION AND REQUIRED UNIT OF MEASURE	STORET NUMBER (30–34)	Remarks See Inst. (35)	Replicate (36)	< or > (37)	VALUE (38–47)
	N-AMMONIA (MG/L)	00608				9.2
	CHLORIDE (MG/L)	00941				330.
	SULFATE (MG/L)	00946				88.
	TDS (MG/L)	70300				1500.
	TOC (MG/L)	00680				28.
	PHENOLICS (MG/L)	32730				<0.0022
	IRON (MG/L)	01046				8.3
	LEAD (MG/L)	01049				<0.0014
	MANGANESE (MG/L)	01056				0.13

All analytical procedures must be performed in accordance with the methods contained in "Test Methods for Evaluating Solid Wastes, Physical/Chemical Methods," SW-846, 3rd Edition, September 1986 or equivalent methods approved by the Agency. Proper sample chain of custody control and quality assurance/quality control procedures must be maintained in accordance with the facility sampling and analysis plan.

Only Keypunch with Data in Column 35 or Columns 38-47

ILLINOIS ENVIRONMENTAL PROTECTION AGENCY
DIVISION OF LAND POLLUTION CONTROL
CHEMICAL ANALYSIS FORM

RECORD CODE: L P C S M 0 1 (1–7) TRANS CODE: A (8)

REPORT DUE DATE __/__/__ (36 M D Y 41)

FEDERAL ID NUMBER _____

SITE INVENTORY NUMBER 0 9 7 8 1 1 0 0 0 2 (9–18)

MONITOR POINT NUMBER (see Instructions) M W - C (19–22)

REGION 5 CO. GREAT LAKES

DATE COLLECTED 0 1 / 2 5 / 0 5 (23 M D Y 28)

FACILITY NAME US NAVAL BASE # 2

FOR IEPA USE ONLY

LAB ____ (29)

DATE RECEIVED __/__/__ (42 M D Y 47)

BACKGROUND SAMPLE (X) ____ (54)

TIME COLLECTED (24 Hr. Clock) __:__ (55 H M 58)

UNABLE TO COLLECT SAMPLE (see Instructions) X (59)

MONITOR POINT SAMPLED BY (see Instructions) X (60) EGD OTHER (SPECIFY)

SAMPLE FIELD FILTERED — INORGANICS (X) ____ (61) ORGANICS (X) ____ (62)

SAMPLE APPEARANCE (63) WELL DAMAGED NO SAMPLE (102)

COLLECTOR COMMENTS (103) ____ (142)

LAB COMMENTS (150) ____ (199)

RECORD CODE L P C S M 0 2 (1–7) TRANS CODE A (8) (COLUMNS 9-29 FROM ABOVE)

	FIELD MEASUREMENTS CONSTITUENT DESCRIPTION AND REQUIRED UNIT OF MEASURE	STORET NUMBER (30–34)	Remarks See Inst. (35)	Replicate (36)	< or > (37)	VALUE (38–47)
Q	TEMP OF WATER (unfiltered °F)	0 0 0 1 1				
Q	SPEC COND (unfiltered umhos)	0 0 0 9 4				
Q	pH (unfilted units)	0 0 4 0 0				
Q	ELEV OF GW SURF (ft ref MSL)	7 1 9 9 3				
Q	DEPTH OF WATER (ft below LS)	7 2 0 1 9				
A	BTM WELL ELEV (ft ref MSL)	7 2 0 2 0				
Q	DEPTH TO WATER FR MEA PT (ft)	7 2 1 0 9				

IEPA/DLPC

CHEMICAL ANALYSIS FORM

RECORD CODE | L | P | C | S | M | 0 | 2 | (1–7) TRANS CODE | A | (8)

SITE INVENTORY NUMBER 0 9 7 8 1 1 0 0 0 2 (9–18)

CO. GREAT LAKES REGION #5

US NAVAL BASE #2

FACILITY NAME

MONITOR POINT NUMBER M W-C (19–22)

DATE COLLECTED 0 1 / 2 5 / 0 5 (23 M D Y 28)

LAB TEST AMERICA (29)

LAB MEASUREMENTS CONSTITUENT DESCRIPTION AND REQUIRED UNIT OF MEASURE	STORET NUMBER (30–34)	Remarks See Inst. (35)	Replicate (36)	< or > (37)	VALUE (38–47)
N-AMMONIA (MG/L)	00608				
CHLORIDE (MG/L)	00941				
SULFATE (MG/L)	00946				
TDS (MG/L)	70300				
TOC (MG/L)	00680				
PHENOLICS (MG/L)	32730				
IRON (MG/L)	01046				
LEAD (MG/L)	01049				
MANGANESE (MG/L)	01056				
WELL DAMAGED NO SAMPLE					

All analytical procedures must be performed in accordance with the methods contained in "Test Methods for Evaluating Solid Wastes, Physical/Chemical Methods," SW-846, 3rd Edition, September 1986 or equivalent methods approved by the Agency. Proper sample chain of custody control and quality assurance/quality control procedures must be maintained in accordance with the facility sampling and analysis plan.

Only Keypunch with Data in Column 35 or Columns 38-47

ILLINOIS ENVIRONMENTAL PROTECTION AGENCY
DIVISION OF LAND POLLUTION CONTROL
CHEMICAL ANALYSIS FORM

RECORD CODE: L P C S M 0 1 (1–7) TRANS CODE: A (8)

REPORT DUE DATE __/__/__ (36 M D Y 41)

FEDERAL ID NUMBER _____

SITE INVENTORY NUMBER 0 9 7 8 1 1 0 0 0 2 (9–18)

MONITOR POINT NUMBER (see Instructions) M W - D (19–22)

REGION 5 CO. GREAT LAKES

DATE COLLECTED 0 1 / 2 5 / 0 5 (23 M D Y 28)

FACILITY NAME US NAVAL BASE # 2

FOR IEPA USE ONLY

LAB ____ (29)

DATE RECEIVED __/__/__ (42 M D Y 47)

BACKGROUND SAMPLE (X) ____ (54)

TIME COLLECTED (24 Hr. Clock) 1 0 : 1 5 (55 H M 58)

UNABLE TO COLLECT SAMPLE (see Instructions) ____ (59)

MONITOR POINT SAMPLED BY (see Instructions) X (60) EGD OTHER (SPECIFY)

SAMPLE FIELD FILTERED — INORGANICS (X) X (61) ORGANICS (X) ____ (62)

SAMPLE APPEARANCE: L I G H T B R O W N C L O U D Y (63–102)

COLLECTOR COMMENTS: N O N E (103–142)

LAB COMMENTS: N O N E (150–199)

RECORD CODE L P C S M 0 2 (1–7) TRANS CODE A (8) (COLUMNS 9-29 FROM ABOVE)

	FIELD MEASUREMENTS CONSTITUENT DESCRIPTION AND REQUIRED UNIT OF MEASURE	STORET NUMBER (30–34)	Remarks See Inst. (35)	Replicate (36)	< or > (37)	VALUE (38–47)
Q	TEMP OF WATER (unfiltered °F)	00011				46.7
Q	SPEC COND (unfiltered umhos)	00094				890.
Q	pH (unfilted units)	00400				7.60
Q	ELEV OF GW SURF (ft ref MSL)	71993				668.08
Q	DEPTH OF WATER (ft below LS)	72019				4.27
A	BTM WELL ELEV (ft ref MSL)	72020				657.48
Q	DEPTH TO WATER FR MEA PT (ft)	72109				7.30

IEPA/DLPC

CHEMICAL ANALYSIS FORM

RECORD CODE | L | P | C | S | M | 0 | 2 | (1–7) TRANS CODE | A | (8)

SITE INVENTORY NUMBER 0 9 7 8 1 1 0 0 0 2 (9–18)

MONITOR POINT NUMBER M W-D (19–22)

CO. GREAT LAKES REGION #5

DATE COLLECTED 0 1 / 2 5 / 0 5 (23 M D Y 28)

US NAVAL BASE #2
FACILITY NAME

LAB TEST AMERICA (29)

LAB MEASUREMENTS CONSTITUENT DESCRIPTION AND REQUIRED UNIT OF MEASURE	STORET NUMBER (30–34)	Remarks See Inst. (35)	Replicate (36)	< or > (37)	VALUE (38–47)
N-AMMONIA (MG/L)	00608				<0.10
CHLORIDE (MG/L)	00941				94.
SULFATE (MG/L)	00946				190.
TDS (MG/L)	70300				800.
TOC (MG/L)	00680				2.2
PHENOLICS (MG/L)	32730				<0.0022
IRON (MG/L)	01046				<0.042
LEAD (MG/L)	01049				<0.0014
MANGANESE (MG/L)	01056				0.032

All analytical procedures must be performed in accordance with the methods contained in "Test Methods for Evaluating Solid Wastes, Physical/Chemical Methods," SW-846, 3rd Edition, September 1986 or equivalent methods approved by the Agency. Proper sample chain of custody control and quality assurance/quality control procedures must be maintained in accordance with the facility sampling and analysis plan.

Only Keypunch with: Data in Column 35 or Columns 38-47

Printed on Recycled Paper

ILLINOIS ENVIRONMENTAL PROTECTION AGENCY
DIVISION OF LAND POLLUTION CONTROL
CHEMICAL ANALYSIS FORM

RECORD CODE: L P C S M 0 1 (1–7)
TRANS CODE: A (8)

REPORT DUE DATE ___/___/___ (36 M D Y 41)

FEDERAL ID NUMBER _____

SITE INVENTORY NUMBER 0 9 7 8 1 1 0 0 0 2 (9–18)

MONITOR POINT NUMBER (see Instructions) M W - E (19–22)

REGION 5 CO. GREAT LAKES

DATE COLLECTED 01/25/05 (23 M D Y 28)

FACILITY NAME US NAVAL BASE # 2

FOR IEPA USE ONLY

LAB ____ (29)

DATE RECEIVED ___/___/___ (42 M D Y 47)

BACKGROUND SAMPLE (X) ____ (54)

TIME COLLECTED (24 Hr. Clock) 9:20 (55 H M 58)

UNABLE TO COLLECT SAMPLE (see Instructions) ____ (59)

MONITOR POINT SAMPLED BY (see Instructions) X (60) EGD OTHER (SPECIFY)

SAMPLE FIELD FILTERED — INORGANICS (X) X (61) ORGANICS (X) ____ (62)

SAMPLE APPEARANCE LIGHT BROWN CLOUDY (63–102)

COLLECTOR COMMENTS NONE (103–142)

LAB COMMENTS NONE (150–199)

RECORD CODE L P C S M 0 2 (1–7) TRANS CODE A (8) (COLUMNS 9-29 FROM ABOVE)

	FIELD MEASUREMENTS CONSTITUENT DESCRIPTION AND REQUIRED UNIT OF MEASURE	STORET NUMBER (30–34)	Remarks See Inst. (35)	Replicate (36)	< or > (37)	VALUE (38–47)
Q	TEMP OF WATER (unfiltered °F)	00011				46.4
Q	SPEC COND (unfiltered umhos)	00094				538.
Q	pH (unfilted units)	00400				7.56
Q	ELEV OF GW SURF (ft ref MSL)	71993				667.76
Q	DEPTH OF WATER (ft below LS)	72019				4.27
A	BTM WELL ELEV (ft ref MSL)	72020				657.22
Q	DEPTH TO WATER FR MEA PT (ft)	72109				7.16

IEPA/DLPC

CHEMICAL ANALYSIS FORM

RECORD CODE | L | P | C | S | M | 0 | 2 | (1–7) TRANS CODE | A | (8)

SITE INVENTORY NUMBER 0 9 7 8 1 1 0 0 0 2 (9–18)

CO. GREAT LAKES REGION #5

US NAVAL BASE #2

FACILITY NAME

MONITOR POINT NUMBER M W-E (19–22)

DATE COLLECTED 01/25/05 (23 M D Y 28)

LAB TEST AMERICA (29)

LAB MEASUREMENTS CONSTITUENT DESCRIPTION AND REQUIRED UNIT OF MEASURE	STORET NUMBER (30–34)	Remarks See Inst. (35)	Replicate (36)	< or > (37)	VALUE (38–47)
N-AMMONIA (MG/L)	00608				<0.10
CHLORIDE (MG/L)	00941				32.
SULFATE (MG/L)	00946				54.
TDS (MG/L)	70300				440.
TOC (MG/L)	00680				2.5
PHENOLICS (MG/L)	32730				<0.0022
IRON (MG/L)	01046				<0.042
LEAD (MG/L)	01049				<0.0014
MANGANESE (MG/L)	01056				0.10

All analytical procedures must be performed in accordance with the methods contained in "Test Methods for Evaluating Solid Wastes, Physical/Chemical Methods," SW-846, 3rd Edition, September 1986 or equivalent methods approved by the Agency. Proper sample chain of custody control and quality assurance/quality control procedures must be maintained in accordance with the facility sampling and analysis plan.

Only Keypunch with Data in Column 35 or Columns 38-47

ILLINOIS ENVIRONMENTAL PROTECTION AGENCY
DIVISION OF LAND POLLUTION CONTROL
CHEMICAL ANALYSIS FORM

RECORD CODE: L P C S M 0 1 (1–7) TRANS CODE: A (8)

REPORT DUE DATE ___/___/___ (36 M D Y 41)

FEDERAL ID NUMBER _____

SITE INVENTORY NUMBER 0 9 7 8 1 1 0 0 0 2 (9–18)

MONITOR POINT NUMBER (see Instructions) M W - F (19–22)

REGION 5 CO. GREAT LAKES

DATE COLLECTED 0 1 / 2 5 / 0 5 (23 M D Y 28)

FACILITY NAME US NAVAL BASE # 2

FOR IEPA USE ONLY

LAB _____ (29)

DATE RECEIVED ___/___/___ (42 M D Y 47)

BACKGROUND SAMPLE (X) _____ (54)

TIME COLLECTED (24 Hr. Clock) __:__ (55 H M 58)

UNABLE TO COLLECT SAMPLE (see Instructions) X (59)

MONITOR POINT SAMPLED BY (see Instructions) X (60) EGD OTHER (SPECIFY)

SAMPLE FIELD FILTERED — INORGANICS (X) X (61) ORGANICS (X) _____ (62)

SAMPLE APPEARANCE (63–102): WELL DAMAGED NO SAMPLE

COLLECTOR COMMENTS (103–142): _____

LAB COMMENTS (150–199): _____

RECORD CODE L P C S M 0 2 (1–7) TRANS CODE A (8) (COLUMNS 9-29 FROM ABOVE)

	FIELD MEASUREMENTS CONSTITUENT DESCRIPTION AND REQUIRED UNIT OF MEASURE	STORET NUMBER	Remarks See Inst.	Replicate	< or >	VALUE
Q	TEMP OF WATER (unfiltered °F)	00011 (30–34)	(35)	(36)	(37)	(38–47)
Q	SPEC COND (unfiltered umhos)	00094				
Q	pH (unfilted units)	00400				
Q	ELEV OF GW SURF (ft ref MSL)	71993				
Q	DEPTH OF WATER (ft below LS)	72019				
A	BTM WELL ELEV (ft ref MSL)	72020				
Q	DEPTH TO WATER FR MEA PT (ft)	72109				

IEPA/DLPC

CHEMICAL ANALYSIS FORM

RECORD CODE | L | P | C | S | M | 0 | 2 | (1–7) TRANS CODE | A | (8)

SITE INVENTORY NUMBER 0 9 7 8 1 1 0 0 0 2 (9–18)

CO. GREAT LAKES REGION #5

US NAVAL BASE #2

FACILITY NAME

MONITOR POINT NUMBER M W-E (19–22)

DATE COLLECTED 0 1 / 2 5 / 0 5 (23 M D Y 28)

LAB TEST AMERICA (29)

LAB MEASUREMENTS CONSTITUENT DESCRIPTION AND REQUIRED UNIT OF MEASURE	STORET NUMBER (30–34)	Remarks See Inst. (35)	Replicate (36)	< or > (37)	VALUE (38–47)
N-AMMONIA (MG/L)	00608				
CHLORIDE (MG/L)	00941				
SULFATE (MG/L)	00946				
TDS (MG/L)	70300				
TOC (MG/L)	00680				
PHENOLICS (MG/L)	32730				
IRON (MG/L)	01046				
LEAD (MG/L)	01049				
MANGANESE (MG/L)	01056				
WELL DAMAGED NO SAMPLE					

All analytical procedures must be performed in accordance with the methods contained in "Test Methods for Evaluating Solid Wastes, Physical/Chemical Methods," SW-846, 3rd Edition, September 1986 or equivalent methods approved by the Agency. Proper sample chain of custody control and quality assurance/quality control procedures must be maintained in accordance with the facility sampling and analysis plan.

Only Keypunch with Data in Column 35 or Columns 38-47

Printed on Recycled Paper

TestAmerica
ANALYTICAL TESTING CORPORATION
WDNR No. 128053530
602 COMMERCE DRIVE · WATERTOWN, WI 53094 · 920-261-1660 · FAX 920-261-8120

ANALYTICAL REPORT

Mr. Brian Schneider
GRAEF, ANHALT, SCHLOEMER
& ASSOCIATES, INC.
125 S. 84th St. Suite 401
Milwaukee, WI 53214-1470

02/08/2005

Job No: 05.00482

The following samples were received by TestAmerica for analysis:

0978110002

Sample Number	Sample Description	Date Taken	Date Received
604175	MW-A	01/25/2005	01/26/2005
604176	MW-B	01/25/2005	01/26/2005
604177	MW-D	01/25/2005	01/26/2005
604178	MW-E	01/25/2005	01/26/2005

David W. Havick
Laboratory Manager

GRAEF, ANHALT, SCHLOEMER
Job No: 05.00482

02/08/2005

KEY TO DATA FLAGS

The attached sample(s) may have a result flag shown on the report. The following are the result flag definitions:

A = Analyzed/extracted past hold time
B = Blank is contaminated
C = Standard outside of control limits
D = Diluted for analysis
E = TCLP extraction outside of method required temperature range
F = Sample filtered in lab
G = Received past hold time
H = Late eluting hydrocarbons present
I = Improperly handled sample
J = Estimated concentration
L = Common lab solvent
M = Matrix interference
P = Improperly preserved sample
Q = Result confirmed via re-analysis
S = Sediment present
T = Does not match typical pattern
W = BOD re-set due to missed dilution
X = Unidentified compound(s) present
Z = Internal standard outside limits
* = See Case Narrative

KEY TO ANALYST INITIALS

The attached sample(s) may have been analyzed by another certified laboratory. If a number appears in the Analyst Initials field, the following are the appropriate certifications (if the lab code does not appear below, that means that certification is not required for the work performed):

Lab Code	Certification Number
008	WDNR - 999766900
009	WDNR - 241293690
013	WDNR - 999917160; ILNELAC - 100261
020	WDNR - 999447680
030	ILNELAC - 100230; WDNR - 998294430
060	ILNELAC - 100221; WDNR - 999447130
070	IA - 007; ILNELAC - 000668; MDH - 019-999-319; WDNR - 999917270
090	ILNELAC 200006; WDNR - 399031270
130	WDNR - 632021390
147	WDNR - 721026460
148	WDNR - 399017190
300	FLNELAC - 87358; IA - 131; MDH - 047-999-345; WDNR - 998020430
400	WDNR - 113133790
510	WDNR - 241249360
520	WDNR - 999518190; ILNELAC - 100439
700	WDNR - 113289110

TestAmerica Watertown Certifications: WI DNR - 128053530; IL NELAC - 100453; IA DNR - 294; MN DoH - 055-999-366; ND DoH R-046; AR DEQ - 88-0808

Unless sub-contracted (see above), volatiles analyses (including VOC, PVOC, GRO, BTEX and TPH Gasoline) performed by TestAmerica Watertown at 1101 Industrial Drive, Units 9&10. All other analyses performed at 602 Commerce Drive, Watertown WI 53094.

Results reported between the Method Detection Limit (MDL) and Limit of Quantitation (LOQ) are less certain than results at or above the LOQ.

For questions regarding this report, please contact Dan Milewsky or Warren Topel.

TestAmerica
ANALYTICAL TESTING CORPORATION
WDNR No. 128053530
602 COMMERCE DRIVE · WATERTOWN, WI 53094 · 920-261-1660 · FAX 920-261-8120

ANALYTICAL REPORT

Mr. Brian Schneider
GRAEF, ANHALT, SCHLOEMER
& ASSOCIATES, INC.
125 S. 84th St. Suite 401
Milwaukee, WI 53214-1470

02/08/2005
Job No: 05.00482
Account No: 32700
Purchase Order:

Job Description: 0978110002
097811002

Parameter	Results	Units	MDL	LOQ	Method	Date Analyzed	Analyst	Prep/Run Batch
604175 MW-A			Date/Time Taken: 01/25/2005 12:10					
Groundwater Elev.	667.77	MSL	n/a	n/a		01/25/2005	pam	4039
Depth to GW	9.15	Feet	n/a	n/a		01/25/2005	pam	3996
Odor	No		n/a	n/a		01/25/2005	pam	4018
Color	Yes		n/a	n/a		01/25/2005	pam	4012
Turbidity	Yes		n/a	n/a		01/25/2005	pam	3936
Depth to Water Below LS	6.83	Feet				01/25/2005	pam	784
Bottom Elevation	662.22	Feet				01/25/2005	pam	784
Chloride	14	mg/L	1.0	3.3	EPA 325.2	02/01/2005	gaf	2472
N-Ammonia	<0.10	mg/L	0.10	0.33	SM 4500NHH	02/03/2005	tds	1786
pH, Lab	7.0	units	n/a	n/a	EPA 150.1	01/31/2005	kls	2902
Phenols, Colorimetric	<0.0022	mg/L	0.0022	0.0078	EPA 420.2	02/03/2005	070	402
Solids, Total Dissolved	670	mg/L	1.0	3.3	EPA 160.1	01/27/2005	ecl	1377
Sulfate, IC	230	mg/L	2.0	6.7	EPA 300.0	02/04/2005	tds	1919
Total Organic Carbon	10	mg/L	0.31	1.1	SW 9060	01/31/2005	070	729
Iron, Dissolved	0.26	mg/L	0.042	0.14	EPA 236.1	01/28/2005	gaf	2319
Lead, Dissolved, GFAA	<0.0014	mg/L	0.0014	0.0051	EPA 239.2	02/01/2005	gaf	2601
Manganese, Dissolved	0.31	mg/L	0.0018	0.0063	EPA 243.1	02/02/2005	gaf	1487
Temperature, field	8.1	C	n/a	n/a		01/25/2005	pam	4102
pH, Field	7.44	units	n/a	n/a	EPA 150.1	01/25/2005	pam	4379
Field Conductivity @ 25 C	690	umhos/cm	n/a	n/a		01/25/2005	pam	3882
604176 MW-B			Date/Time Taken: 01/25/2005 11:15					
Groundwater Elev.	667.81	MSL	n/a	n/a		01/25/2005	pam	4039
Depth to GW	8.30	Feet	n/a	n/a		01/25/2005	pam	3996
Odor	Yes		n/a	n/a		01/25/2005	pam	4018
Color	Yes		n/a	n/a		01/25/2005	pam	4012
Turbidity	Yes		n/a	n/a		01/25/2005	pam	3936
Depth to Water Below LS	5.41	Feet				01/25/2005	pam	784
Bottom Elevation	659.11	Feet				01/25/2005	pam	784
Chloride	330	mg/L	1.0	3.3	EPA 325.2	02/01/2005	gaf	2472
N-Ammonia	9.2	mg/L	0.10	0.33	SM 4500NHH	02/03/2005	tds	1786
pH, Lab	6.8	units	n/a	n/a	EPA 150.1	01/31/2005	kls	2902
Phenols, Colorimetric	<0.0022	mg/L	0.0022	0.0078	EPA 420.2	02/03/2005	070	402
Solids, Total Dissolved	1,500	mg/L	1.0	3.3	EPA 160.1	01/27/2005	ecl	1377

TestAmerica
ANALYTICAL TESTING CORPORATION
WDNR No. 128053530
602 COMMERCE DRIVE · WATERTOWN, WI 53094 · 920-261-1660 · FAX 920-261-8120

ANALYTICAL REPORT

Mr. Brian Schneider
GRAEF, ANHALT, SCHLOEMER
& ASSOCIATES, INC.
125 S. 84th St. Suite 401
Milwaukee, WI 53214-1470

02/08/2005
Job No: 05.00482
Account No: 32700
Purchase Order:

Job Description: 0978110002
097811002

Parameter		Results	Units	MDL	LOQ	Method	Date Analyzed	Analyst	Prep/Run Batch
604176 MW-B			Date/Time Taken: 01/25/2005 11:15						
Sulfate, IC		88	mg/L	2.0	6.7	EPA 300.0	02/03/2005	tds	1916
Total Organic Carbon	M	28	mg/L	0.31	1.1	SW 9060	01/31/2005	070	729
Iron, Dissolved		8.3	mg/L	0.042	0.14	EPA 236.1	01/28/2005	gaf	2319
Lead, Dissolved, GFAA		<0.0014	mg/L	0.0014	0.0051	EPA 239.2	02/01/2005	gaf	2601
Manganese, Dissolved		0.13	mg/L	0.0018	0.0063	EPA 243.1	02/02/2005	gaf	1487
Temperature, field		8.5	C	n/a	n/a		01/25/2005	pam	4102
pH, Field		7.23	units	n/a	n/a	EPA 150.1	01/25/2005	pam	4379
Field Conductivity @ 25 C		1,805	umhos/cm	n/a	n/a		01/25/2005	pam	3882
604177 MW-D			Date/Time Taken: 01/25/2005 10:15						
Groundwater Elev.		668.08	MSL	n/a	n/a		01/25/2005	pam	4039
Depth to GW		7.30	Feet	n/a	n/a		01/25/2005	pam	3996
Odor		No		n/a	n/a		01/25/2005	pam	4018
Color		Yes		n/a	n/a		01/25/2005	pam	4012
Turbidity		Yes		n/a	n/a		01/25/2005	pam	3936
Depth to Water Below LS		4.27	Feet				01/25/2005	pam	784
Bottom Elevation		657.48	Feet				01/25/2005	pam	784
Chloride		94	mg/L	1.0	3.3	EPA 325.2	02/01/2005	gaf	2472
N-Ammonia		<0.10	mg/L	0.10	0.33	SM 4500NHH	02/03/2005	tds	1786
pH, Lab		7.1	units	n/a	n/a	EPA 150.1	01/31/2005	kls	2902
Phenols, Colorimetric		<0.0022	mg/L	0.0022	0.0078	EPA 420.2	02/03/2005	070	402
Solids, Total Dissolved		800	mg/L	1.0	3.3	EPA 160.1	01/27/2005	ecl	1377
Sulfate, IC		190	mg/L	2.0	6.7	EPA 300.0	02/04/2005	tds	1919
Total Organic Carbon	M	2.2	mg/L	0.31	1.1	SW 9060	01/31/2005	070	729
Iron, Dissolved		<0.042	mg/L	0.042	0.14	EPA 236.1	01/28/2005	gaf	2319
Lead, Dissolved, GFAA		<0.0014	mg/L	0.0014	0.0051	EPA 239.2	02/01/2005	gaf	2601
Manganese, Dissolved		0.032	mg/L	0.0018	0.0063	EPA 243.1	02/02/2005	gaf	1487
Temperature, field		8.2	C	n/a	n/a		01/25/2005	pam	4102
pH, Field		7.60	units	n/a	n/a	EPA 150.1	01/25/2005	pam	4379
Field Conductivity @ 25 C		890	umhos/cm	n/a	n/a		01/25/2005	pam	3882

TestAmerica
ANALYTICAL TESTING CORPORATION
WDNR No. 128053530
602 COMMERCE DRIVE · WATERTOWN, WI 53094 · 920-261-1660 · FAX 920-261-8120

ANALYTICAL REPORT

Mr. Brian Schneider
GRAEF, ANHALT, SCHLOEMER
& ASSOCIATES, INC.
125 S. 84th St. Suite 401
Milwaukee, WI 53214-1470

02/08/2005
Job No: 05.00482
Account No: 32700
Purchase Order:

Job Description: 0978110002
097811002

Parameter	Results	Units	MDL	LOQ	Method	Date Analyzed	Analyst	Prep/Run Batch
604178 MW-E			Date/Time Taken: 01/25/2005 09:20					
Groundwater Elev.	667.76	MSL	n/a	n/a		01/25/2005	pam	4039
Depth to GW	7.16	Feet	n/a	n/a		01/25/2005	pam	3996
Odor	No		n/a	n/a		01/25/2005	pam	4018
Color	Yes		n/a	n/a		01/25/2005	pam	4012
Turbidity	Yes		n/a	n/a		01/25/2005	pam	3936
Depth to Water Below LS	4.27	Feet				01/25/2005	pam	784
Bottom Elevation	657.22	Feet				01/25/2005	pam	784
Chloride	32	mg/L	1.0	3.3	EPA 325.2	02/01/2005	gaf	2472
N-Ammonia	<0.10	mg/L	0.10	0.33	SM 4500NHH	02/03/2005	tds	1786
pH, Lab	7.1	units	n/a	n/a	EPA 150.1	01/31/2005	kls	2902
Phenols, Colorimetric	<0.0022	mg/L	0.0022	0.0078	EPA 420.2	02/03/2005	070	402
Solids, Total Dissolved	440	mg/L	1.0	3.3	EPA 160.1	01/27/2005	ecl	1377
Sulfate, IC	54	mg/L	2.0	6.7	EPA 300.0	02/03/2005	tds	1916
Total Organic Carbon	2.5	mg/L	0.31	1.1	SW 9060	01/31/2005	070	729
Iron, Dissolved	<0.042	mg/L	0.042	0.14	EPA 236.1	01/28/2005	gaf	2319
Lead, Dissolved, GFAA	<0.0014	mg/L	0.0014	0.0051	EPA 239.2	02/01/2005	gaf	2601
Manganese, Dissolved	0.10	mg/L	0.0018	0.0063	EPA 243.1	02/02/2005	gaf	1487
Temperature, field	8.0	C	n/a	n/a		01/25/2005	pam	4102
pH, Field	7.56	units	n/a	n/a	EPA 150.1	01/25/2005	pam	4379
Field Conductivity @ 25 C	538	umhos/cm	n/a	n/a		01/25/2005	pam	3882

TestAmerica
ANALYTICAL TESTING CORPORATION
WDNR No. 128053530
602 COMMERCE DRIVE · WATERTOWN, WI 53094 · 920-261-1660 · FAX 920-261-8120

QUALITY CONTROL REPORT
CONTINUING CALIBRATION VERIFICATION

02/08/2005

Mr. Brian Schneider
GRAEF, ANHALT, SCHLOEMER
& ASSOCIATES, INC.
125 S. 84th St. Suite 401
Milwaukee, WI 53214-1470

Job No: 05.00482
Account No: 32700

Job Description: 0978110002

Parameter	Run Batch	True Value	Observed Value	Percent Recovery	Control Limits
Chloride	2472	20.0	20.1	100	90 - 110
Chloride	2472	20.0	20.3	102	90 - 110
N-Ammonia	1786	10.0	9.8	98	90 - 110
N-Ammonia	1786	10.0	9.8	98	90 - 110
pH, Lab	2902	7.00	7.02	100	98.6 - 101
pH, Lab	2902	7.00	7.10	101	98.6 - 101
Sulfate, IC	1916	40.0	38.0	95	90 - 110
Sulfate, IC	1916	40.0	39.9	100	90 - 110
Sulfate, IC	1916	40.0	38.8	97	90 - 110
Sulfate, IC	1919	40.0	38.7	97	90 - 110
Iron, Dissolved	2319	0.500	0.514	103	90 - 110
Iron, Dissolved	2319	0.500	0.507	101	90 - 110
Lead, Dissolved, GFAA	2601	0.0250	0.0262	105	90 - 110
Lead, Dissolved, GFAA	2601	0.0250	0.0270	108	90 - 110
Manganese, Dissolved	1487	0.500	0.494	99	90 - 110
Manganese, Dissolved	1487	0.500	0.497	99	90 - 110

TestAmerica
ANALYTICAL TESTING CORPORATION
WDNR No. 128053530
602 COMMERCE DRIVE · WATERTOWN, WI 53094 · 920-261-1660 · FAX 920-261-8120

QUALITY CONTROL REPORT

BLANKS

02/08/2005

Mr. Brian Schneider
GRAEF, ANHALT, SCHLOEMER
& ASSOCIATES, INC.
125 S. 84th St. Suite 401
Milwaukee, WI 53214-1470

Job No: 05.00482
Account No: 32700

Job Description: 0978110002

Parameter	Prep Batch	Run Batch	Blank Result	MDL	LOQ	Units
Chloride		2472	<1.0	1.0	3.3	mg/L
N-Ammonia		1786	<0.10	0.10	0.33	mg/L
Phenols, Colorimetric		402	<0.0022	0.0022	0.0078	mg/L
Sulfate, IC		1916	<2.0	2.0	6.7	mg/L
Sulfate, IC		1919	<2.0	2.0	6.7	mg/L
Iron, Dissolved		2319	<0.042	0.042	0.14	mg/L
Lead, Dissolved, GFAA		2601	<0.0014	0.0014	0.0051	mg/L
Manganese, Dissolved		1487	<0.0018	0.0018	0.0063	mg/L

Method blank results exceed control limits when results are higher than the highest of any of the following: 1 - The limit of detection; 2 - Five percent of the regulatory limit for that analyte; 3 - Five percent of the measured concentration in the sample. NR149.14 (3)d

TestAmerica
ANALYTICAL TESTING CORPORATION
WDNR No. 128053530
602 COMMERCE DRIVE · WATERTOWN, WI 53094 · 920-261-1660 · FAX 920-261-8120

QUALITY CONTROL REPORT
LABORATORY CONTROL STANDARD

02/08/2005

Mr. Brian Schneider
GRAEF, ANHALT, SCHLOEMER
& ASSOCIATES, INC.
125 S. 84th St. Suite 401
Milwaukee, WI 53214-1470

Job No: 05.00482
Account No: 32700

Job Description: 0978110002

Analyte	Prep Batch Number	Run Batch Number	LCS Amount	Units	LCS Result	LCSD Result	LCS Percent Recovery	LCSD Percent Recovery	Control Limits	Relative Percent Difference
N-Ammonia		1786	10.0	mg/L	9.9		99		90 - 110	
Iron, Dissolved		2319	0.500	mg/L	0.507		101		85 - 129	

TestAmerica
ANALYTICAL TESTING CORPORATION
WDNR No. 128053530
602 COMMERCE DRIVE · WATERTOWN, WI 53094 · 920-261-1660 · FAX 920-261-8120

QUALITY CONTROL REPORT
MATRIX SPIKE/MATRIX SPIKE DUPLICATE

02/08/2005

Mr. Brian Schneider
GRAEF, ANHALT, SCHLOEMER
& ASSOCIATES, INC.
125 S. 84th St. Suite 401
Milwaukee, WI 53214-1470

Job No: 05.00482
Account No: 32700

Job Description: 0978110002

Analyte	Prep Batch Number	Run Batch Number	Sample Result	Spike Amount	Units	Matrix Spike Result	MSD Result	MS Percent Recovery	MSD Percent Recovery	Control Limits	Relative Percent Difference
Chloride		2472	42	100	mg/L	141	141	99	99	64 - 132	0.0
N-Ammonia		1786	0.19	50.0	mg/L	49.7	48.9	99	97	60 - 136	1.6

TestAmerica
ANALYTICAL TESTING CORPORATION
WDNR No. 128053530
602 COMMERCE DRIVE · WATERTOWN, WI 53094 · 920-261-1660 · FAX 920-261-8120

QUALITY CONTROL REPORT
SPIKES

02/08/2005

Mr. Brian Schneider
GRAEF, ANHALT, SCHLOEMER
& ASSOCIATES, INC.
125 S. 84th St. Suite 401
Milwaukee, WI 53214-1470

Job No: 05.00482
Account No: 32700

Job Description: 0978110002

Analyte	Prep Batch Number	Run Batch Number	Sample Result	Spike Amount	Units	Spike Result	Percent Recovery	Control Limits
Sulfate, IC		1919	230	25	mg/L	253	92	66 - 132
Lead, Dissolved, GFAA		2601	<0.0014	0.0200	mg/L	0.0197	98	73 - 122
Manganese, Dissolved		1487	0.10	0.50	mg/L	0.610	102	81 - 116

TestAmerica
ANALYTICAL TESTING CORPORATION
WDNR No. 128053530
602 COMMERCE DRIVE · WATERTOWN, WI 53094 · 920-261-1660 · FAX 920-261-8120

QUALITY CONTROL REPORT
DUPLICATES

02/08/2005

Mr. Brian Schneider
GRAEF, ANHALT, SCHLOEMER
& ASSOCIATES, INC.
125 S. 84th St. Suite 401
Milwaukee, WI 53214-1470

Job No: 05.00482
Account No: 32700

Job Description: 0978110002

Parameter	Prep Batch Number	Run Batch Number	Sample Value	Duplicate Value	Units	RPD	Control Limit
N-Ammonia		1786	<0.10	<0.10	mg/L		22
pH, Lab		2902	7.0	6.98	units	0.3	
pH, Lab		2902	8.6	8.61	units	0.1	
Solids, Total Dissolved		1377	610	614	mg/L	0.7	10
Solids, Total Dissolved		1377	1,200	1,190	mg/L	0.8	10
Sulfate, IC		1916	17	15.1	mg/L	12	22
Iron, Dissolved		2319	0.68	0.665	mg/L	2.2	23
Lead, Dissolved, GFAA		2601	<0.0014	<0.0014	mg/L		10

5.00482

CHAIN OF CUSTODY RECORD

GRAEF ANHALT SCHLOEMER and Associates Inc.
Engineers & Scientists
One Honey Creek Corporate Center
125 South 84th Street
Milwaukee, WI 53214-1470
Phone: (414) 259-1500
FAX: (414) 259-0037

GAS # 2004-0187.00

Project Number: 09 7811 0002

Laboratory: TEST AMERICA

Sample Collector(s): EGD

Property Owner: GREAT LAKES NAVAL BASE (SUPPLYSIDE LANDFILL)

Property Address: GREAT LAKES, IL.

Telephone Number (include area code):

I hereby certify that I received, properly handled, and disposed of these samples as noted below:

Relinquished By (Signature)	Date/Time/Temp.	Received By (Signature)
Edward C. Disch		Vicki Thyhall
Vicki Thyhall	1/26/05 14:20	
Relinquished By (Signature)	Date/Time/Temp.	Received for Laboratory By (Signature)
	1/26 1435	

Sample Condition on Receipt by Laboratory
LABORATORY USE ONLY

Temperature of temperature blank: None

Page 1 of 1

If samples were received on ice and there was ice remaining, you may report the temperature as "received on ice." If all of the ice was melted, the temperature of the melt may be substituted for a temperature blank.

Field ID Number[1]	Date Collected	Time Collected	Sample Type[2]	Sample Device[3]	Preserv. Type	Field Screening	Description	Analysis Type	No./Type of Containers	Lab ID Number	Cracked /Broken	Improperly Sealed	Good Condition	Other Comments
MW-A	1-25-05	12:10	Groundwater	Disp. Bailer	H_2SO_4 ICP	N/A	MW-A	PHENOLS	1-LTR Amb					
					H_2SO_4			TOC	1-250 mL					
					H_2SO_4 ICP HNO_3			Ammonia as N	1-LTR PL					
								Fe, Mn, Pb	1-250 mL					
					Ia			Chloride, pH, TDS, Sulfate	1-LTR PL					
MW-B		11:15					MW-B							
MW-D		10:15					MW-D							
MW-E		9:20					MW-E							

[1]Sample description must clearly correlate the sample ID to the sampling location shown on a map.
[2]Specify groundwater, surface water, soil, leachate, sludge, etc.
[3]Type of sampling device; split spoon, hand auger, metal spatula, soil syringe, etc.

Remarks: NORMAL TAT
* METAL SAMPLES FIELD FILTERED
SAME ANALYSIS ON ALL SAMPLES

Report Results to: BRIAN SCHNEIDER

DEPARTMENT USE/OPTIONAL FOR SOIL SAMPLERS

Disposition of unused portion of sample
Laboratory should:
☐ Dispose ☐ Retain for ____ days
☐ Return ☐ Other

DEPARTMENT USE ONLY

Split samples: Offered? ☐ Yes ☐ No (Check one)
Accepted? ☐ Yes ☐ No (Check one)

Accepted By: _____
Signature

R 1/26/05

White–Accompanies Shipment, Yellow–Laboratory Files, Pink–GAS