N62661 AR 001115
NAVSTA NEWPORT RI
5090.3a

WORK PLAN
for Background Concentrations Investigation

Naval Station
Newport, Rhode Island

Northern Division
Naval Facilities Engineering Command

Contract Number N62472-90-D-1298
Contract Task Order 0302

December 1998

866

TETRA TECH NUS, INC.

W5297178F

WORK PLAN FOR BACKGROUND CONCENTRATIONS INVESTIGATION

NAVAL STATION NEWPORT, RHODE ISLAND

COMPREHENSIVE LONG-TERM ENVIRONMENTAL ACTION - NAVY (CLEAN) CONTRACT

Submitted to:
Northern Division
Environmental Branch, Code 1812
Naval Facilities Engineering Command
10 Industrial Highway, Mail Stop # 2
Lester, Pennsylvania 19113-2090

Submitted by:
Tetra Tech NUS, Inc.
600 Clark Avenue, Suite 3
King of Prussia, Pennsylvania 19406-1433

Contract Number N62472-90-D-1298
"CLEAN" Contract Task Order 0302

December 1998

PREPARED BY:

STEPHEN PARKER
PROJECT MANAGER
TETRA TECH NUS, INC.
WILMINGTON, MASSACHUSETTS

APPROVED BY:

JOHN J. TREPANOWSKI, P.E.
PROGRAM MANAGER
TETRA TECH NUS, INC.
KING OF PRUSSIA, PENNSYLVANIA

TABLE OF CONTENTS

SECTION		PAGE
1.0	INTRODUCTION	1-1
1.1	SITE SPECIFIC INVESTIGATION OBJECTIVES	1-1
1.2	PROJECT ORGANIZATION AND RESPONSIBILITIES	1-3
1.3	PROJECT DELIVERABLES	1-5
1.4	WORK PLAN ORGANIZATION	1-6
1.5	CHANGES TO THE WORK PLAN	1-6
1.6	SCHEDULE AND REGULATORY OVERSIGHT	1-7
2.0	BACKGROUND INFORMATION	2-1
2.1	SITE DESCRIPTION AND HISTORY	2-1
2.2	DATA QUALITY OBJECTIVES	2-2
2.2.1	Statement of the Problem	2-2
2.2.2	Identification of the Decision	2-3
2.2.3	Inputs to the Decision	2-3
2.2.4	Definition of the Study Boundaries	2-3
2.2.5	Decision Rule	2-3
2.2.6	Limits on Decision Errors	2-4
2.2.7	Design for Obtaining Data	2-4
3.0	FIELD SAMPLING PLAN	3-1
3.1	INTRODUCTION	3-1
3.2	SURFICIAL SOIL SAMPLING	3-1
3.3	DECONTAMINATION PROCEDURES	3-4
4.0	QUALITY ASSURANCE/QUALITY CONTROL	4-1
4.1	PARCC PARAMETERS	4-1
4.1.1	Precision and Accuracy	4-2
4.1.2	Representativeness	4-2
4.1.3	Completeness	4-3
4.1.4	Comparability	4-3
4.2	QUALITY CONTROL SAMPLES	4-5
4.2.1	Field Duplicates	4-5
4.2.2	Rinsate Blanks	4-5
4.2.3	Field Blanks	4-6
4.2.4	Trip Blanks	4-6
4.2.5	Laboratory Control Samples	4-6
4.3	SAMPLING PROCEDURES	4-6
4.4	SAMPLE DESIGNATION AND CUSTODY	4-6
4.4.1	Sample Numbering	4-6
4.4.2	Sample Chain of Custody	4-8
4.5	CALIBRATION PROCEDURES	4-9
4.6	LABORATORY ANALYSIS	4-9
4.7	DATA REDUCTION, REVIEW, AND REPORTING	4-9

TABLE OF CONTENTS (Continued)

SECTION		PAGE
4.8	INTERNAL QUALITY CONTROL	4-10
4.9	PERFORMANCE AND SYSTEM AUDITS	4-10
4.10	PREVENTATIVE MAINTENANCE	4-11
4.11	DATA ASSESSMENT PROCEDURES	4-11
4.11.1	Representativeness, Accuracy, and Precision	4-11
4.11.2	Data Validation	4-12
4.11.3	Data Evaluation	4-12
4.12	CORRECTIVE ACTION	4-12
4.13	QUALITY ASSURANCE REPORTS/DOCUMENTS	4-13
5.0	**DATA ANALYSIS AND STATISTICAL TESTING**	**5-1**
6.0	**REPORTING**	**6-1**
7.0	**REFERENCES**	**7-1**

TABLES

NUMBER		PAGE
3-1	Proposed Background Surficial Soil Sampling Locations	3-2
4-1	Analytical Methods and Sample Summary	4-4
4-2	Sample Container, Preservation and Holding Time Requirements	4-7

FIGURES

NUMBER		
1-1	SITE LOCUS PLAN	1-2
3-1	PROPOSED BACKGROUND SAMPLING LOCATIONS	(Map Pocket)

APPENDICES

A HEALTH AND SAFETY PLAN
B STANDARD OPERATING PROCEDURES
C FIELD FORMS
D SOIL SURVEY MAPS, USDA, SCS

1.0 INTRODUCTION

This work plan has been prepared under the Comprehensive Long Term Environmental Action Navy (CLEAN) Contract No. N62472-90-D-298, Contract Task Order (CTO) 302. The statement of work requires Tetra Tech NUS, Inc. (TtNUS) to provide assistance to the Navy in determining background soil concentrations of contaminants that are naturally occurring in the environment at the Naval Station Newport (formerly the Naval Education and Training Center - NETC) located on Aquidneck Island, Rhode Island. This work plan describes the procedures for performing an investigation of background locations in the NETC study area, as depicted on Figure 1-1.

The purpose of this plan is to describe the background location selection process, the field tasks to be performed, the analytical parameters, sampling techniques, methods for data interpretation, and reporting aspects of the investigation.

1.1 SITE SPECIFIC INVESTIGATION OBJECTIVES

Previous investigations have indicated that the background levels of certain chemicals may be higher in soils on Aquidneck Island than other areas of Rhode Island. The objective for this study is to establish background concentrations of naturally occurring metals for the NETC study area by determining the occurrence, geochemical abundance and variability (scatter) of metals in surface soil at the Naval Station. In addition, information on polynuclear aromatic hydrocarbons (PAH) concentrations will be developed for reference in future CERCLA work.

The term "background", as defined in the Rhode Island Department of Environmental Management (RIDEM) Site Remediation Regulation (DEM-DSR-01-93), refers to the ambient concentrations of Hazardous Substances present in the environment that have not been influenced by human activities, or the ambient concentrations of Hazardous Substances consistently present in the environment in the vicinity of the Contaminated-Site which are the result of human activities unrelated to Releases at the Contaminated-Site. Background samples provide baseline measurements to determine what the concentrations of these chemicals would be at a site if no releases occurred there. The background concentration or level sought by the field work described in this work plan includes only naturally occurring levels of inorganic elements and existing concentrations of PAHs in surface soil.

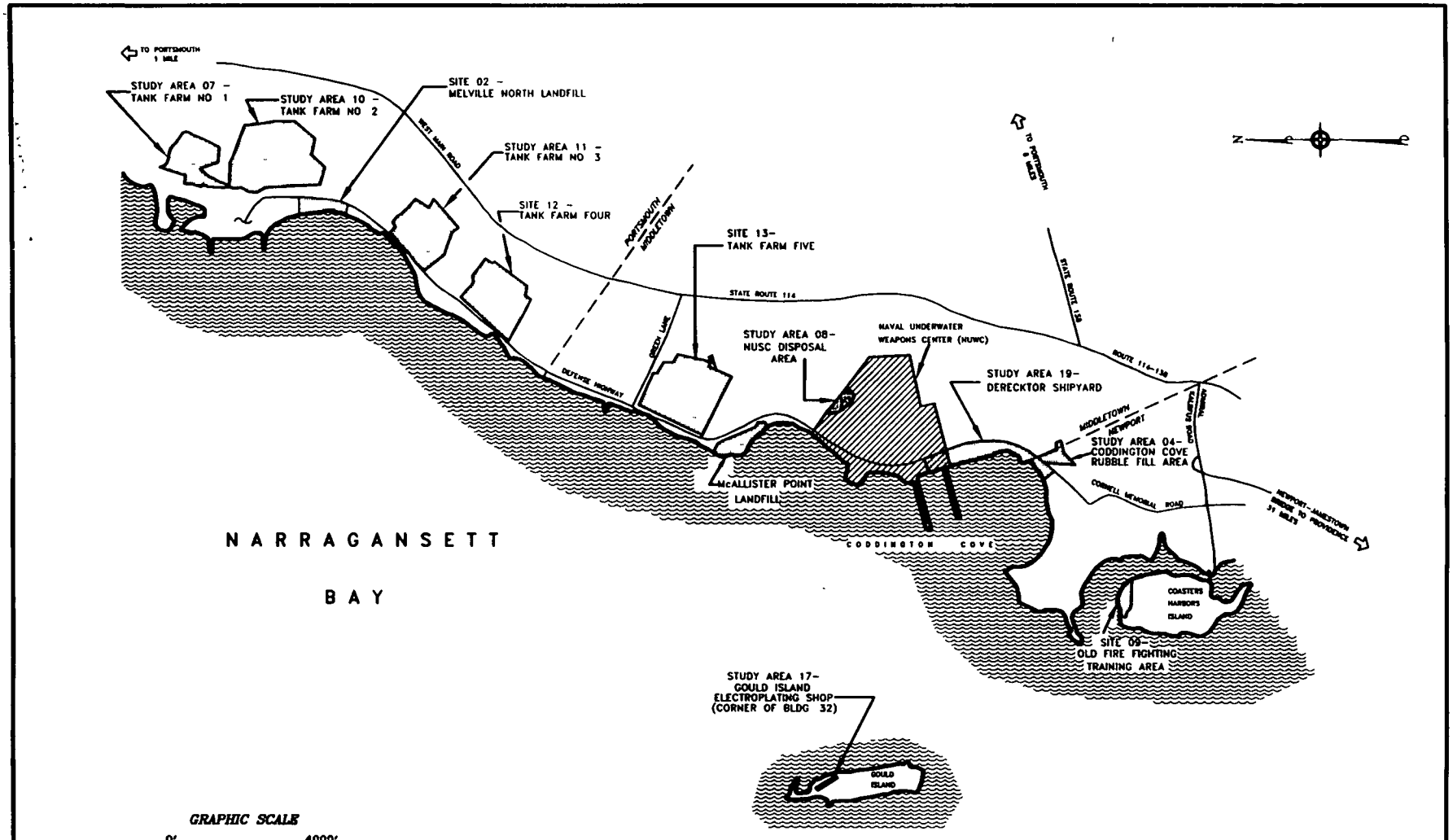

SOURCE: DRAFT FINAL REMEDIAL INVESTIGATION REPORT TRC ENVIRONMENTAL CORPORATION - AUGUST 1994

SITE LOCUS			
NAVAL EDUCATION AND TRAINING CENTER			
NETC – NEWPORT, RI			
DRAWN BY	D W MACDOUGALL	REV	0
CHECKED BY	K O'NEILL	DATE	DECEMBER 19, 1997
SCALE.	1" = 4000'	FILE NO	DWG\NETC\NUSC\FIG_1-1A DWG

FIGURE 1-1

Brown & Root Environmental

55 Jonspin Road Wilmington, MA 01887
(978)658-7899

The investigation activities will include a reconnaissance survey with the RIDEM representative to evaluate proposed background sampling locations, sampling and analyses of approximately 80 surficial soil stations based on the four different soil types (minimum 20 samples per soil type), a GPS survey of the background sample locations, data validation, and statistical analysis of the data.

The information gathered from this investigation will be used as an initial guideline in the selection of cleanup criteria, and for selection of material that will be placed at a site after remediation.

1.2 PROJECT ORGANIZATION AND RESPONSIBILITIES

TtNUS will be responsible for the overall management of the project, including the performance of field activities presented in this work plan.

NAVFAC personnel will be responsible for administrative and technical oversight of the program, and project management and coordination between state and federal regulatory agencies, while the NETC on-site representatives will be responsible for on-site coordination with TtNUS.

Key Navy personnel supporting this project are as follows:

James Shafer
Regional Project Manager (RPM)
Naval Facilities Engineering Command, Northern Division

Melissa Griffin
Facility Contact
NETC PWD - Environment

Key TtNUS personnel supporting this project are as follows:

Stephen Parker
Project Manager

Tetra Tech NUS, Inc., Wilmington, MA
Phone: (978) 658-7899
FAX: (978) 658-7870

Matt Soltis, CIH, CSP
CLEAN Health and Safety Manager

Paul Frank
CLEAN Quality Assurance Manager

Tetra Tech NUS, Inc., Pittsburgh, PA
Phone: (412) 921-7090
FAX: (412) 921-4040

The TtNUS Project Manager (PM) will have the primary responsibility for implementing and managing the study. The TtNUS PM will also be responsible for notifying regulatory agencies of field activities or schedule modifications. The Field Operations Leader (FOL) and lead technical staff will be appointed to support the PM.

The CLEAN Health and Safety Manager is responsible for reviewing health and safety plans for all CLEAN operations, and performs site audits to ensure compliance with program, and site health and safety requirements.

The Quality Assurance Manager is responsible for QA/QC requirements for the TtNUS CLEAN program. This individual reviews data and deliverable documents, and performs system audits to ensure contract QA/QC goals are met.

The FOL will be responsible for directing on-site field activities and will report directly to the PM. The FOL will coordinate efforts of the field sampling staff, the subcontractors, and the lead technical staff. The FOL will be responsible for identifying problem areas and bringing them to the attention of the PM for resolution.

A Site Safety Officer (SSO) will be designated prior to field activities and will be responsible for ensuring adherence to all health and safety requirements. The SSO reports directly to the CLEAN Health and Safety Manager and the PM.

In addition to the above personnel, TtNUS program personnel will provide overall support in subcontracting, cost tracking, progress reporting, and supervising the PM. The program personnel include:

John Trepanowski, P.E.
Program Manager

Garth Glenn
Deputy Program Manager

Tetra Tech NUS, Inc., King of Prussia, PA
Phone: (610) 491-9688
Fax: (610) 491-9647

1.3 PROJECT DELIVERABLES

Project deliverables submitted during this project will include:

- A report of the study investigation including:
  - Summary of site background information
  - Description of field investigation activities
  - Summary and interpretation of the data
  - Summary of statistical analysis of the data collected
  - Conclusions and recommendations for use of background data

- Supporting documentation, including:
  - Maps depicting sampling points, and other significant features
  - Results from laboratory analysis of samples
  - Photographs of sample locations

A more detailed description of the report is presented in Section 6.0 of this work plan.

1.4 WORK PLAN ORGANIZATION

Section 2.0 of this work plan describes the site history and basis for the Data Quality Objectives (DQOs) developed for this project.

Section 3.0 presents a description of the field work planned for this investigation. Sample collection procedures and analytical parameters are also described in this section.

Section 4.0 presents the Quality Assurance Plan for this work plan. This plan describes the QA/QC sample collection procedures and frequencies, data quality protocols, and analytic data validation requirements.

Section 5.0 presents a general summary of the data analysis and statistical testing that will be conducted following completion of the field work and laboratory analysis described in Section 3.0.

Section 6.0 presents a general outline of the report format and content that will be prepared following completion of the field work and data analysis and statistical testing as described in Sections 3.0 and 5.0, respectively.

Section 7.0 presents references cited and used in preparing this work plan.

A site-wide Health and Safety Plan, attached as Appendix A, will be implemented during the fieldwork. Appendix B presents Standard Operating Procedures (SOPs) for the field investigation work. Appendix C contains samples of forms to be used for documentation during this investigation.

1.5 CHANGES TO THE WORK PLAN

This work plan incorporates comments received from regulatory agencies on the Draft work plan dated April 1998. It is the intention of TtNUS and the Navy to proceed with the final selection of the background sampling locations deliberately and cautiously to assure that there is agreement on the location selections. Site visits will be conducted at the proposed sampling locations with

regulatory personnel in order to rectify any differences prior to initiation of field activities, however, during the project execution, it may become necessary to modify the work plan. If the plan for collecting data needs to be altered, the work plan may be amended through the use of a Request for Field Modification (RFM) form. This form will be prepared by the TtNUS FOL and forwarded to the TtNUS PM. The PM will make a recommendation to the Navy RPM, who (if necessary) will forward the RFM to the regulatory oversight RPMs. Time limits on acceptance of, or comment to, the field modification requests will be stated.– An example of the RFM form is presented in Appendix C.

1.6 SCHEDULE AND REGULATORY OVERSIGHT

A schedule for field investigations will be prepared and submitted to the oversight parties (U.S. EPA and RIDEM) after approval of this work plan. This schedule will be updated as necessary to inform oversight personnel when different tasks and activities are scheduled to occur. A 24-hour advance notification of changes in scheduled field activities will be given to the regulatory agencies.

2.0 BACKGROUND INFORMATION

The information provided in this section has been adapted from the Remedial Investigation (RI) Report for NETC dated January 1992 (TRC 1992).

2.1 SITE DESCRIPTION AND HISTORY

The NETC facility is approximately 1,063 acres in size, with portions of the facility located in Newport, Middletown, and Portsmouth, Rhode Island. The site is approximately 60 miles south of Boston, Massachusetts and 25 miles southeast of Providence, Rhode Island. The facility layout follows the shoreline of the west side of Aquidneck Island for nearly 6 miles bordering Narragansett Bay. A study area location map is provided on Figure 1-1.

The NETC facility has been used by the U.S. Navy since the era of the Civil War. Military activities at the base significantly increased during times of war. During World Wars I and II, servicemen were housed on the base. In subsequent peacetime years, on-site facilities were slowly disestablished, until the headquarters of the Commander Cruiser-Destroyer Force Atlantic was located there in 1962. In April 1973. the Shore Establishment Realignment Program (SER) reorganized Naval forces and resulted in the disestablishment of several on-site facilities and associated reductions in Navy personnel. Subsequent to this "downsizing", the Navy excessed a significant portions of the original acreage. Other portions of the facility are currently leased by the Navy to the State of Rhode Island and Economic Development Corporation. Some of these areas are subleased to private enterprises.

Previous investigations at the NETC facility include the performance of an Initial Assessment Study (IAS) by Environdyne Engineers, Inc. in 1982 and 1983, and a Confirmation Study (CS), consisting of a Verification Step and Characterization Step, by Loureiro Engineering Associates over the period from 1983 to 1986, Final Remedial Investigation Technical Report (RI) for NETC, Newport (TRC 1992), RI report for Tank Farm 5 (TRC 1992). Marine Environmental Risk Assessments (ERA) for McAllister Point Landfill and the Derecktor Shipyard (SAIC, URI 1996), Site Assessment Screening Evaluation (SASE) for the Former Robert E. Derecktor Shipyard (B&RE 1997), Site Investigation for Melville North Landfill (B&RE 1997), Final RI for McAllister Point Landfill (B&RE 1997). This is only a partial list of investigations at that have been performed

at NETC. Other investigative activities at NETC have been completed, are currently active, or are in the planning stages at this time.

Individual site descriptions, histories, and characterizations including geology, hydrology, and results of previous investigations are not included in this report. This information is provided in detail in the individual reports listed above.

2.2 DATA QUALITY OBJECTIVES

The data quality objectives (DQOs) for this project were developed in accordance with the EPA Guidance for Data Quality Objectives (EPA G4 document). The G4 document suggests seven steps be followed to develop project DQOs. This action has been done in a cursory manner for this project, since the objectives are in part dictated by CERCLA guidance, the Federal Facilities Agreement, and other standard guidances to perform remedial investigations. The intended use of the data resulting from a field investigation is a determining factor in defining the DQO for that data. To be certain that the data is consistent with the goals of the investigation, the seven steps of defining DQOs has been presented in this Section.

The seven steps are described in the following subsections:

2.2.1 Statement of the Problem

The NETC area has been used by the Navy since the Civil War, with expansion and increased activity occurring during times of war. Several environmental study areas or "sites" have been identified within the NETC facility. Concentrations of contaminants at these sites are typically compared to "RIDEM direct exposure criteria" in order to satisfy state requirements. However, recent investigations conducted at the NETC sites indicate that RIDEM direct exposure criteria may not reflect naturally occurring concentrations in surficial soil on the west side of Aquidneck Island for certain parameters.

The objective of this investigation is to determine background metal concentrations upgradient or at "background" locations for the NETC study area. Soil samples will be collected from different soil types previously identified at sampling locations and analyzed for full target analyte list (TAL) metals. Until the data undergoes statistical analysis, it is not known if background metal

concentrations will need to be established for each of the different data groups (e.g. the different soil types).

In addition, it seems appropriate to develop an understanding of regional levels of PAHs since it is documented that these contaminants can be present as a result of sources other than Navy activities. This sort of information can be valuable in the non-management phase of the CERCLA process.

2.2.2 Identification of the Decision

After the completion of this study, a range of metal concentrations will be published as proposed background concentrations for Navy sites on the Western shore of Aquidneck Island. This decision will be supported by calculation of various test statistics.

2.2.3 Inputs to the Decision

Inputs to the decision are the elements used in the decision process. Inputs to the decision as stated in Section 2.2.2 are as follows:

- locations of proposed samples
- results of multiple statistical analyses performed in a manner to ensure a 95% confidence level for decision making
- actual concentrations of chemicals detected

2.2.4 Definition of the Study Boundaries

The decision stated in Section 2.2.2 focuses on the on-shore area in and surrounding the NETC facility, west of State Route 114. Background samples having a composition similar to the soil types that may have been found at the NETC study area sites prior to navy activities are to be collected from adjacent or surrounding areas at undisturbed locations determined to be free of influence from either the site or other non-uniformly distributed anthropogenic sources.

2.2.5 Decision Rule

Typically, the decision rule is a clear statement defining the requirements of the investigation based on the possible outcomes of the study. The intention and decision rule for this study is to determine the background concentration range of naturally occurring metals and existing concentrations of PAHs for comparison to IR site data and as a loose guideline for cleanup actions. The number and types of samples collected must be sufficient to allow a determination of whether the metal levels in the NETC study area sites are statistically elevated above the background soil concentrations representative of the various soil types.

Multiple statistical tests will be performed to determine metal concentrations representative of background, with an acceptable (95 percent) level of confidence, in accordance with the guidance and recommendations presented in several EPA and related publications (EPA, 1989a, 1989b, 1992b, 1992c, and 1996d; NFESC, 1997; Gilbert, 1987, 1993) and applicable regulatory guidance (RIDEM Remediation Regulations – DEM-DSR-01-93, amended 8/96).

In addition, PAH concentrations will be measured at 20 stations to provide future information on background soil conditions. However, PAHs will not be measured for each soil type as is the case for metals.

2.2.6 Limits on Decision Errors

The limits of decision errors are set to limit the potential for false negative and false positive decisions. This study was designed to result in a high probability to capture the existing metal and PAH concentrations at unaffected areas at NETC. Therefore, a sufficient number of background sample stations are required from representative soil types, all targeted toward areas least likely to have been effected by activities at the NETC study area sites.

By complying with the RIDEM requirement for collecting approximately 20 background samples for each distinct soil type, the background study will have sufficient statistical power to detect relatively small differences in the site and background population characteristics for the TAL metals. Because the standard deviation of background data cannot be predicted in advance, it is not possible to designate a particular threshold value for the minimum detectable difference in

population means (or other differentiating characteristics) that will be such that the test comparisons will be ensured capable of recognizing this threshold difference with a specified probability (power). Based on the required minimum detection limits and the analytical methods to be followed, it is anticipated that all or more than 85 percent of soil samples will be positively detected for metals analyte list, which will prevent the problem of reduced statistical power that might occur if too many nondetected results are found.

2.2.7 Design for Obtaining Data

The DQO process described in the G4 DQO document describes the use of various statistical approaches for developing a database. These approaches are based on the representativeness of the data that is required. For instance, if the Decision Rule was to "remove soils with concentrations of lead above 10 mg/kg" the sampling plan would be based on identifying hot spots of a specific size, which is determined by the precision of the removal action to be taken.

However, since this investigation is being performed to measure and evaluate existing levels of metals and PAHs, the design of the sampling plan can be more qualitative, or "targeted" toward locations that are anticipated to be unimpacted by human activities. The sampling plan is provided in Section 3.0 of this work plan.

Specifics on the precision, accuracy, etc. of the data collected are described in the Quality Assurance Project Plan, presented in Section 4.0 of this work plan.

3.0 FIELD SAMPLING PLAN

This section presents a description of the field investigation activities that are planned for the NETC study area.

3.1 INTRODUCTION

The objective of the Field Sampling Plan (FSP) is to obtain surficial soil data to establish background concentrations of naturally occurring metals in the NETC area and to measure existing concentrations of PAHs in these soils. The following section details the surficial soil sampling field activities to be performed during this investigation. Proposed targeted sampling areas are listed on Table 3-1 and depicted in Figure 3-1. Specific Standard Operating Procedures (SOPs) will be referenced where applicable (SOP Reference Manual TtNUS, 1990).

3.2 SURFICIAL SOIL SAMPLING

Soil samples will be collected in the general sample areas listed in Table 3-1 and presented on Figure 3-1. Specific sampling locations within the general areas listed in Table 3-1 and depicted on Figure 3-1 will be determined in conjunction with RIDEM, USEPA, and Navy personnel during a site visit, prior to sampling activities. The actual sample locations will be determined once the field conditions and available historic information have been evaluated. The field confirmation will consider the targeted soil type and determine whether the area appears to be impacted by anthropogenic activities. The specific locations will be flagged or staked (if needed) during the field visit. According to soil survey maps presented in the United States Department of Agriculture (USDA) Soil Survey of Rhode Island, the following four soil types are associated with the NETC study area:

<u>Newport Silt Loam (NeA/NeB/NeC)</u> - Tank Farm One, Tank Farm Two, Tank Farm Three, Tank Farm Four, Tank Farm Five, McAllister Point Landfill, Gould Island, Derecktor Shipyard

<u>Pittstown silt loam (PmA/PmB)</u> - Tank Farm Four, Tank Farm Five

<u>Windsor loamy sand (WgB)</u> - Tank Farm Five, McAllister Point Landfill

TABLE 3-1
PROPOSED BACKGROUND GENERAL SOIL SAMPLING AREAS
NAVAL STATION
NEWPORT, RHODE ISLAND

SAMPLE AREA ID	DESCRIPTION/MAP LOCATION	Soil Type	Soil Map
SS01	East of TF-1 and north of Melville Pond, partially wooded	Se	99
SS02	Southwest Corner of Tank Farm 2	NeC	99
SS03	Northeast Corner of Tank Farm 1	NeB	99
SS04	Woodlot, east of Melville North Landfill and Defense Hwy	NeC	99
SS05	Woodlot, east of Melville North Landfill and Defense Hwy	NeC	99
SS06	TF-3 fenceline on north bank of brook from Lawton Valley Reservoir	NeB	99
SS07	TF-4, northeast corner, near large maples at fenceline	NeB	99
SS08	TF-4, south boundary	PmB	99
SS09	West Side of TF5, South bank of brook	PmA	109
SS10	Southwest corner of TF5, area of dense brush	NeA	109
SS11	TF-5, north bank of Gomes Brook	PmA	109
SS12	St. Columbus Cemetery, inside TF-5 fenceline	NeC	109
SS13	East of McAllister Pt Landfill and south of TF-5 near location of MW23 (McAllister)	WgB	108
SS14	Northwest Corner of NUWC Property, adjacent to Golf course	Se	109
SS15	Miantonomi Hill Memorial Park, near monument (east of Coasters Island)	NeC	118

Stissing silt loam (Se) - Tank Farm Four, McAllister Point Landfill, NUSC Disposal Area, Derecktor Shipyard

The above soil types will be sampled as part of the background soil concentration investigation. Refer to maps depicting the various soil types reproduced in Appendix D. It is possible that access to private property may be necessary for some soil sampling locations. It is assumed that the Navy will obtain property access as required.

Samples will be collected from the 0-2 foot depth interval at approximately 80 sample locations. Within all of the 15 areas noted on Figure 3-1, 20 sample stations will be selected to represent each of the four soil types that are targeted for this study. These stations will be selected in the field with input from regulatory personnel and Navy contractor soil scientists. Prior to collection of a soil sample, approximately the top 2 inches of the soil will be removed from the location to limit the effects of potential pollutant sources such as automobile emissions, road runoff, or other common anthropogenic source of soil contamination. The materials to be removed also includes partially decomposed organic matter (leaves, grass, vegetative roots, etc.). Additionally, the following considerations will be adhered to when selecting acceptable background soil locations:

- Areas directly beneath pine trees, hemlocks, and oaks will be avoided, if possible, to avoid leaching effects from acid soils associated with these species.

- Samples will not be collected within 10 yards of any pipeline, fenceline, roadway, powerline, agricultural fieldline, railroad tracks, or any other such anthropogenic feature or activity.

- Samples will not be collected within the water table.

At 20 of the 80 sample stations identified, the Navy will collect additional aliquots of soil for PAH analysis. This information will be used for CERCLA planning purposes as described in Section 2.0 of this Work Plan. The 20 locations selected for PAH analysis will be selected at random, spanning the four soil types identified in Table 3-1.

Soil samples will be collected by hand auger, shovel, or other hand tool, depending on the soil conditions and accessibility in accordance with TtNUS SOP SA-1.3. The soil sample will be a

composited sample collected from the 0 to 2 foot interval. If refusal is encountered at less than 2 feet, then several additional attempts will be made to auger to two feet before accepting the refusal depth. The soil will be collected into a stainless steel bowl and homogenized using a stainless steel or disposable trowel and then transferred to the appropriate sample container(s). Field data will be recorded on the appropriate field data forms and field logbook. Recorded data will include a soil description (structure, texture, color, consistency, etc.) and classification of the soil (Unified Soil Classification System). All non-disposable sampling equipment will be decontaminated prior to each use, as described in Section 3.3. Background sample locations will be backfilled, if necessary, with clean sand to the original grade.

Appropriate chain-of-custody procedures will be followed (see Section 4.3.2) and samples will be labeled, packaged and shipped according to TtNUS SOP No. SA-6.1. A summary of the environmental samples is provided in Table 3-1. Analytical parameters, sample preservation requirements, required sample containers for samples and a summary of quality control samples is presented in Section 4.0.

The surface soil samples will be analyzed for TAL metals [(including extractable aluminum and iron), total organic carbon (TOC), cation exchange capacity (CEC), grain size distribution, soil pH, and salinity]. Approximately 80 field samples for metals and 20 field samples for PAH will be collected. Additional duplicates, lab control samples, rinsate, and field blanks will be collected as required in Section 4.2. Analysis will be performed by a TtNUS Master Agreement Laboratory, and a Tier III validation will be performed to assure data quality.

All surficial soil locations will be photodocumented and surveyed with GPS survey equipment (GPS to sub-meter accuracy). Any stakes or flagging will be removed from public areas after surveying.

3.3 DECONTAMINATION PROCEDURES

All non-disposable sampling equipment that comes in contact with the sample medium will be decontaminated to prevent cross contamination between sampling points. This includes equipment such as soil sampling spatulas and hand auger buckets, etc. The following decontamination sequence will be employed:

- Remove gross contamination by scrubbing with potable water.

- Scrub with potable water/liquinox.
- Rinse with potable water.
- Rinse with 10 percent nitric acid.
- Rinse with 2-propanol (Laboratory Grade)
- Rinse with deionized water.
- Air dry (to extent possible).
- Wrap with aluminum foil.

4.0 QUALITY ASSURANCE/QUALITY CONTROL

This section provides technical guidelines and procedures for maintaining an appropriate level of quality for data collected during field work performed. This section references the TtNUS Standard Operating Procedures (SOPs) for specific protocols for procedures discussed in Section 3.0.

Pertinent SOPs are included in this work plan as Appendix B. These SOPs include, but are not limited to:

SOP	DESCRIPTION
SA-1.3	Soil Sampling
SA-6.1	Non-Radiological Sample Handling
SA-6.3	Field Documentation
SA-7.1	Decontamination of Field Equipment and Waste Handling

Sampling objectives are to provide sufficient data to establish background concentrations of metals in the NETC study area.

Achieving these objectives requires that the data collected from the field conform to an appropriate level of quality. The quality of a data set is measured by certain characteristics of the data, namely the precision and accuracy, representativeness, completeness, and comparability (PARCC) parameters. Some of the parameters are expressed quantitatively, while others are expressed qualitatively. The PARCC goals for a particular project are determined by the intended use of the data, defined as a part of the Data Quality Objectives (DQOs). DQOs are discussed in Section 2.2; the PARCC parameters are discussed below.

4.1 PARCC PARAMETERS

The PARCC goals for the work covered by this quality assurance plan are discussed in the following sections.

4.1.1 Precision and Accuracy

Field and laboratory precision and accuracy performance can affect the attainment of project objectives, particularly when compliance with established criteria is based on laboratory analysis of environmental samples.

Analytical precision and accuracy will be evaluated upon receipt of the analytical data. Analytical precision will be measured as the relative percent difference from duplicate measurements and relative standard deviation from three or more replicates. Analytical accuracy measures the bias as the percent recovery from matrix spike and matrix spike duplicate samples.

Field sampling precision and accuracy are not easily measured. Field contamination, sample preservation, and sample handling will affect precision and accuracy. By following the appropriate TtNUS SOP, precision and accuracy errors associated with field activities can be minimized. Field duplicates and blanks (field and rinsate) will be used to estimate field sampling precision and accuracy for soil samples submitted for laboratory analysis.

Field duplicate and field quality control blank analyses results will be used to review the laboratory-analyzed results and determine the usability of the data with respect to its intended use. In general, results that are rejected by the data review process will be disqualified from application to the intended use. Qualified data will be used to the greatest extent practicable.

4.1.2 Representativeness

Representativeness describes the degree to which analytical data accurately and precisely define the population being measured. Several elements of the sampling and sample handling process must be controlled to maximize the representativeness of the analytical data (appropriate number of samples collected, physical state of the samples, site-specific factors, sampling equipment, containers, sample preservation and storage, holding times, sample identity, and chain of custody will be defined to ensure that the samples analyzed represent the population being measured). The sampling program is designed to provide analytical data that is representative of the existing contaminant levels.

Representativeness of data is also affected by sampling techniques. Sampling techniques are described in Section 3.0 and in the TtNUS SOPs included in Appendix B.

4.1.3 Completeness

Completeness describes the amount of data generated that meets the objectives for precision, accuracy, and representativeness versus the amount of data expected to be obtained. For relatively clean, homogeneous matrices, 100 percent completeness is expected. However, as matrix complexity and heterogeneity increase, completeness may decrease. Where analysis is precluded or where data quality objectives are compromised, effects on the overall investigation must be considered. Whether or not any particular sample is critical to the investigation will be evaluated in terms of the sample location, the parameter in question, the intended data use, and the risk associated with the error.

The sampling and analysis program for the site is sufficiently broad in scope to prevent a single data point or parameter from jeopardizing attainment of the studies objectives. Critical data points may not be evaluated until all the analytical results are evaluated. Additionally, several sampling points, in aggregate, may be considered to be critical either by location or by analysis. A subsequent sampling event may be necessary if it becomes apparent that the data for a specific medium are of insufficient quality, either with respect to the number of samples or based on an individual analysis.

For the purposes of this effort, a data point will be determined to contribute to the completeness of the data set if the information provided is meaningful, useful, and contributes to the project objectives.

4.1.4 Comparability

One of the objectives of the sampling effort is to provide analytical data that is characterized by a level of quality that is comparable between sampling points. By specifying the use of standard analytical procedures (as well as standardizing field sampling procedures by employing TtNUS and others SOPs), the potential for variables to affect the final data quality will be effectively minimized. Analytical methods for this work are presented in Table 4-1; SOPs appear in Appendix B.

TABLE 4-1
ANALYTICAL METHODS AND SAMPLE SUMMARY
BACKGROUND SURFICIAL SOIL SAMPLING
NAVAL STATION NEWPORT, NEWPORT, RHODE ISLAND

MEDIA	ANALYSIS	METHOD	FIELD SAMPLES	DUPLICATE (1 per 10 field samples)	FIELD BLANK (1 per sampling event)	RINSATE BLANK (1 per day)	TOTAL QUANTITY
SURFICIAL SOIL (0-2 ft)	TAL METALS	ILM04.0 (1)	80	8	1	5	93
	TOC	Lloyd Kahn Method (2)	80	1	0	0	81
	CEC	9080(3)	80	0	0	0	80
	Grain Size Distribution	ASTM D422-63 (4)	80	1	0	0	81
	Soil pH	9041A (5)	80	0	0	0	80
	Salinity	EPA OMEP 01A0005349(6)	80	0	0	0	80
	Extractable Aluminum & Iron	Method to be Determined	80	8	0	0	88
	PAH	OLM03.2(7)	20	2	2	2	26

Notes:
(1) U.S.EPA Contract Laboratory Program statement of work for inorganic analysis multi-media, multi-concentration, ILM04.0 and revisions.
(2) "Lloyd Kahn Method for Determination of Total Organic Carbon in Sediments." U.S. EPA Region II. July 1986.
(3) U.S. EPA Test Method 9080.
(4) ASTM D422-63 November 1963 (Re-approved 1990).
(5) U.S. EPA Test Method 9041A.
(6) U.S. EPA Test Method – Reg. 01A0005349 Interim Guidance on Quality Assurance/Quality Control (QA/QC) for the Estuarine Field and Laboratory Methods. November 15, 1985 (OMEP).
(7) U.S. EPA Contract Lab Program statement of work for organic analysis multi-media, multi-concentration, OLM03.2 revisions.

4.2 QUALITY CONTROL SAMPLES

QC samples to be used during the sampling effort are identified below, and include field duplicates or replicates, laboratory duplicates or replicates, rinsate blanks, and field blanks. Each type of field quality control sample defined below will undergo the same preservation, holding times, etc., as the field samples. Table 4-1 presents a summary of the QC samples to be collected during this field sampling event.

4.2.1 Field Duplicates

Field duplicates will be submitted at the rate of one for every ten samples per matrix. Field personnel will note on the sample summary form and in the logbook which samples are field duplicates. Duplicate samples will be shipped blind to the laboratories, and shipping paperwork will be completed accordingly.

Field personnel will note in the remarks block on the chain-of-custody form which of the samples is to be used for internal laboratory matrix spike/matrix spike duplicate analysis. Field duplicates and multiple sample aliquots are collected by mixing a double portion of the required volume of sample and dividing it into two sample containers. Field duplicates provide precision information regarding homogeneity, handling, shipping, storing, preparation, and analysis.

4.2.2 Rinsate Blanks

Rinsate blanks are obtained under representative field conditions by running analyte-free deionized water through sample collection equipment after decontamination, immediately before sampling and placing it in the appropriate sample containers for analysis. These samples are used to assess the effectiveness of decontamination procedures. Rinsate blanks will be prepared at the rate of one per day during the sampling event. All rinsate samples will be sent to the laboratory. However, only rinsate samples collected from every other day will be analyzed; the other rinsate samples will be marked "hold" on the chain-of-custody forms. "Hold" samples will not be analyzed unless significant contamination is noted in the preceding rinsate blank analyses.

4.2.3 Field Blanks

Field blanks will consist of the source water used in decontamination (includes analyte-free deionized water, potable water from each source, and other waters used in decontamination operations). Field blanks will be prepared at the rate of one per source of water per sampling event.

4.2.4 Trip Blanks

Trip blanks will not be prepared or analyzed for this sampling activity since VOC analysis is not being conducted.

4.2.5 Laboratory Control Samples

A laboratory control sample will be identified by field teams at a frequency of 1 in 20 field samples (per matrix) collected.

4.3 SAMPLING PROCEDURES

Field sampling will be conducted in accordance with Section 3.0 of this document and the TtNUS SOPs presented in Appendix B. Allowable sample holding times and preservation requirements are shown in Table 4-2.

4.4 SAMPLE DESIGNATION AND CUSTODY

Samples collected will be tracked by sample number and date collected. The sample number will be the basis for maintaining chain of custody. These procedures are described below.

4.4.1 Sample Numbering

Samples will be labeled as soon as they are collected. Sample numbers will reflect the source, medium, and location. An alpha numeric numbering system will be used to describe this information. This system is detailed below:

TABLE 4-2
SAMPLE CONTAINER, PRESERVATION AND HOLDING TIME REQUIREMENTS
BACKGROUND SURFICIAL SOIL SAMPLING
NAVAL STATION NEWPORT, NEWPORT, RHODE ISLAND

MEDIA	ANALYSIS	SAMPLE CONTAINER	PRESERVATIVE	HOLDING TIME [1]
SURFICIAL SOILS	TAL METALS	8 oz. wide-mouth jar	Cool to 4°C	28 days
	TOC	8 oz. wide-mouth jar	Cool to 4°C	7 days
	CEC	8 oz. wide-mouth jar	Cool to 4°C	14 days
	Grain Size Distribution	16 oz. wide-mouth jar	None	None
	Soil pH	8 oz. wide-mouth jar	Cool to 4°C	7 days
	Salinity	8 oz. wide-mouth jar	Cool to 4°C	7 days
	Extractable Aluminum & Iron	8 oz. wide-mouth jar	Cool to 4°C	28 days
	PAH	4 oz. wide-mouth amber jar	Cool to 4°C	7 days

Note:

(1) Sample containers shall meet specifications delineated in EPA OSWER Directive No. 9240.0-05A.

(2) Maximum holding time from date of sample collection to date of sample extraction or analysis based on analyte with shortest holding time.

(3) Double volume needed for metals laboratory QC for one of every 20 field samples.

AAA	-	AANN		BB
(Site Identifier)	-	(Medium/Sample Location)	-	(Soil Type)

The identifier for the background samples for the NETC study area is "BKG". Medium will be indicated by "SS" for surficial soil. Sample locations will be noted as the location number from Figure 3-1. The different soil types, "BB", will be indicated by use of their acronym as presented in Section 3.2. For example, a surficial soil sample collected from Newport silt loam at location 01 will be identified as BKG-SS01-NeA.

Blind duplicate samples will be designated such that the location designation will be replaced with a chronological number:

Duplicates: BKG-DUP##

Field blanks will be designated such that they can clearly be identified as field blanks. The designation must be able to be referenced to the source (DIUF water) using the field sample data forms.

Field Blanks: BKG-DIUF-FB##

Rinsate blanks will be identified using the code for the sample for which the sampling device or tool was last used, the identifier (RB), and its chronological number.

Rinsate Blanks: BKG-SS07-RB##

Matrix spike samples are simply marked as such on the sample containers and on the chain-of-custody record.

4.4.2 Sample Chain of Custody

Custody of samples must be maintained and documented at all times. To ensure the integrity of a sample from collection through analysis, an accurate written record is necessary to trace the possession and handling of the sample. This documentation is referred to as the "chain of

custody". Chain of custody begins when samples are collected in the field, and is maintained by storing the samples in secure areas until custody can be passed on. All samples will be accompanied by a chain-of-custody form that will describe the analytical parameters, and the persons who are responsible for their integrity.

Samples will be placed on ice and attended by TtNUS personnel or placed in locked vehicles or designated storage areas until analysis or shipment to an off-site laboratory. Chain-of-custody procedures are described in further detail in the SOPs presented in Appendix B.

4.5 CALIBRATION PROCEDURES

Field equipment normally requiring calibration will be calibrated and operated in accordance with the manufacturer's instructions and manuals. A log will be kept on site, documenting the periodic calibration results for each field instrument.

Calibration procedures for laboratory equipment used in the analysis of environmental samples will be performed in accordance with NFESC requirements and contract requirements under the Basic Ordering Agreements (BOA).

4.6 LABORATORY ANALYSIS

Samples collected will be analyzed for TAL metals, (including extractable aluminum and iron), total organic carbon (TOC), cation exchange capacity (CEC), grain size distribution, soil pH, and salinity as described in previous sections and Table 4-1.

The environmental samples collected for laboratory analysis during the field investigation will be analyzed by a laboratory previously approved by the Navy. Standard EPA analytical procedures will be employed, as depicted in Table 4-1. Validation of data equivalent to EPA Tier III Validation will be performed.

4.7 DATA REDUCTION, REVIEW, AND REPORTING

Laboratory analytical data will be reviewed by qualified TtNUS technical staff. Laboratory data will undergo a data validation equivalent to EPA Tier III validation. Data validation memoranda will

be prepared and submitted to the project manager as a part of that activity. Data validation procedures are described in Section 4.11.

Field data will be periodically reviewed by technical lead personnel and the TtNUS PM to ensure that the data collected is well documented, clearly described, and meets a standard appropriate for the investigation and its ultimate use.

4.8 INTERNAL QUALITY CONTROL

Section 4.1.3 discussed the types and frequency of quality control samples that will be prepared during the field investigation activities for those samples that undergo laboratory analysis. The quantities of various types of QC samples are shown in Table 4-1. Laboratory analysis will follow the QC criteria described in the analytical procedures.

4.9 PERFORMANCE AND SYSTEM AUDITS

System audits will be performed as appropriate to ensure that the work is being implemented in accordance with the approved project SOPs and in an overall satisfactory manner.

The FOL will supervise and on a daily basis check to ensure that the equipment is thoroughly decontaminated, samples are collected and handled properly, and the field work is accurately and neatly documented.

The data reviewer(s) will review the data to ensure it was obtained through the approved methodology, and that the appropriate level of QC effort and reporting were conducted. The data validation effort will be supervised by the TtNUS CLEAN Quality Assurance Manager or designee.

- The PM will oversee the FOL and data reviewer, and check that management of the acquired data proceeds in an organized and expeditious manner.

4.10 PREVENTATIVE MAINTENANCE

TtNUS has established a field equipment maintenance program to ensure the availability of equipment in good working order when and where it is needed. This program consists of the following elements:

The equipment manager maintains an inventory of the equipment by model and serial number, quantity, and condition. Each item of equipment is signed out when in use, and its operating condition and cleanliness is checked upon return.

- The equipment manager conducts routine checks on the status of equipment and is responsible for stocking spare parts and equipment readiness.

- The equipment manager maintains the equipment manual library and trains field personnel in the proper use and care of equipment.

- The FOL is responsible for working with the equipment manager to ensure that the equipment is tested, cleaned, charged, and calibrated in accordance with the manufacturer's instructions before being taken to the job site.

- While the equipment is in the field, the FOL takes responsibility for the equipment, maintains calibration records, and performs maintenance operations and checks.

4.11 DATA ASSESSMENT PROCEDURES

The following paragraphs describe the procedures used to evaluate data prior to inclusion and description in the deliverable reports described elsewhere in this work plan.

4.11.1 Representativeness, Accuracy, and Precision

All laboratory data generated in the investigation will be assessed for representativeness, accuracy, and precision, as described in Section 4.1. The completeness of the data will also be assessed by comparing the acquired data to the project objectives to see that these objectives are

being addressed and met. The specific information used to determine data precision, accuracy, and completeness will be provided in the laboratory data packages.

The PARCC parameter assessment will be conducted by qualified TtNUS personnel. The representativeness of the data will be assessed by determining if the data are consistent with known or anticipated chemical conditions and accepted principles.

Field measurements will be checked for completeness of procedures and documentation of procedures and results.

Precision and accuracy will be determined using replicate samples, and blank and spiked samples, respectively. PARCC parameters are addressed in more detail in Section 4.1.

4.11.2 Data Validation

Samples will be analyzed for TAL metal parameters and PAH described on Table 4-1. Results will be validated using a Tier II validation protocol as specified in the "National Functional Guidelines for Organic/Inorganic Data Review" (U.S. EPA December 1990, revised February 1994 [organic] and February 1993 [inorganic]). Use of these validation protocols is allowed under the NFESC (formerly NEESA) guidelines and is described in the Navy Installation Restoration Laboratory Quality Assurance Guide, Interim Document (revised February 1996).

This level of validation is appropriate for data used to evaluate potential contamination sources under CERCLA, as described in Section 2.2.

4.11.3 Data Evaluation

The evaluation of the data collected during the field investigation will include analysis of chemical concentrations in samples collected from the field. Further evaluation of the data will be performed in conjunction with the preparation of the data report.

4.12 CORRECTIVE ACTION

The QA program will enable problems to be identified, controlled, and corrected. Potential

problems may involve non-conformance with the SOPs and/or analytical procedures established for the project, or other unforeseen difficulties. Any person identifying an unacceptable condition will notify the FOL and the PM. The PM, with the assistance of the Quality Assurance Manager and the project QA/QC officer, will be responsible for developing and initiating appropriate corrective action and verifying that the corrective action has been effective.

Corrective actions may include re-sampling and/or re-analysis of samples or modifying project procedures. If warranted by the severity of the problem (for example, if a change in the approved work plan is required), the Navy will be notified in writing and their approval will be obtained prior to implementing any change. Additional work that is dependent on a nonconforming activity will not be performed until the source of the problem has been addressed.

4.13 QUALITY ASSURANCE REPORTS/DOCUMENTS

A bound/weatherproof field logbook will be maintained by the FOL. The FOL or designee will record all information related to sampling or field activities. This information may include sampling time, weather conditions, unusual events, field measurements, description of photographs, etc. The site logbook maintained by the FOL will contain a summary of the day's activities and will reference the other field logbooks when applicable.

At the completion of field activities, the FOL will submit to the PM all field records, data, field notebooks, logbooks, chain-of-custody receipts, sample log sheets, etc., as presented in Appendix C. The PM will ensure that these materials are entered into the project file.

5.0 DATA ANALYSIS AND STATISTICAL TESTING

Following the completion of the field sampling and analytical work described in Section 3.0 and 4.0, data analysis and statistical testing will be performed. The background data set for metals will undergo an exploratory evaluation that will include several statistical comparisons, after which the final background data set(s) will be established and upper tolerance limits (UTLs) on backgrounds will be calculated. The following tasks will be performed:

Evaluate background data sets to see if they should be combined. Exploratory data tests will be used to determine whether or not the four different background soil type data subsets are statistically similar. Following the same methods and tests as listed below, preliminary tests will answer the questions: Is the mean of one group higher (or lower) than the other? Is there a significantly greater proportion of high concentration data points in the upper ranks of one data set versus the other? Are subgroups both normal or lognormal in shape? Are the quartiles and 95th percentile concentrations similar for the subsets?

The different background data sets will be compared using the following tests:

- Shapiro-Wilk test for determining normality/lognormality of background data sets
- Student's t-test (difference in means for normal/lognormal data with equal variances)
- Satterthwaite t-test (difference in mean for normal/lognormal data with unequal variances)
- Bartlett's test (determines if background data subsets have equal variances)
- Mann-Whitney test (if rank distribution is similar given detection limits that are uniform)
- Gehan's test (if rank distribution is similar given that multiple detection limits exist)
- Quantile test (if ranks similar for the upper concentrations subset of site and background)
- The test of proportions (if frequency of detection is similar given sufficient data points)
- Fisher's exact test (if frequency of detection is similar in the case of few data points)

Upon determination of the preliminary background concentrations corresponding to the 95 percent UCL background concentrations will be set for use as reference values in future site investigations or remedial actions. This limit will be established for one or more soil types. In the event background data do not match a normal or lognormal shape, an alternative limit concentration corresponding to the 95th quantile will be tabulated (Gilbert, 1987) (RIDEM, 1996).

The above tests will be performed in accordance with the guidance and recommendations presented in several EPA and related publications (EPA, 1989a, 1989b, 1992b, 1992c, and 1996d; US Navy, 1997; Gilbert, 1987 and 1993). A decision-tree approach may be used wherein only parametric tests of central tendency (overall population differences) are to be performed if the data fit normal or lognormal distributions, and in this instance would allow the omission of certain nonparametric tests that compare overall population ranks (Gehan's test or Mann-Whitney test). Similarly, a quantile test that looks for subsets of the data (possible hot spots) is recommended only if the various tests comparing the overall populations do not indicate elevated results. These omissions help to reduce labor-intensive manual calculations for the purpose of efficiency; however, these are not statistical preconditions that would preclude using the omitted tests on a more general basis. For example, including the quantile test on a general basis will yield important information on whether a small subset of elevated values occur in one data set but not the other, even if the means are similar.

For this project, computer algorithms will be employed to automatically perform applicable statistical tests wherever the necessary underlying assumptions are valid. This approach allows the use of any valid test result that identifies that concentrations from one data set are elevated, regardless of the outcome of unrelated statistical tests.

Because of limitations in statistical confidence, the upper tolerance limit (UTL) test will not be used as a stand-alone test, consistent with Navy guidance that indicates this test can produce an unacceptably high false positive rate (above 5 percent as the number of site-related sampling points increases). (Note that UTLs estimated in this background study are intended for later use in site investigations (e.g. data evaluation) or remedial actions (e.g. to generate cleanup goals) only <u>after</u> other statistical tests first confirm that site data are somehow elevated above background.)

6.0 REPORTING

Following the completion of the field sampling and analytical work discussed in Section 3.0, and the data analysis and statistical testing discussed in Section 5.0, the results will be described in a short report. The report will contain the following information:

- A statement describing the purpose of the report.
- A description of the study based on Section 3.0 of the work plan and on the modifications of the field work, if any are made, during the period of activity.
- Preliminary exploratory statistical test results will be presented that demonstrate whether the background soil data subgroups are statistically similar.
- Background analytical data will also be summarized by means of descriptive statistics (frequency of detection, mean, range, standard deviation, and 95 percent UTL). As these data are intended for future use only, results will not be compared to any site data.
- Summary tables of the analytical data
- Pertinent information such as contaminant concentrations, soil types, and sample locations will be included in figures.

7.0 REFERENCES

ENSR Consulting & Engineering, and Halliburton NUS Corporation, May 1993. Preliminary Site Assessment Report, Derecktor Shipyard, Middletown, Rhode Island." Northern Division, NAVFAC, Contract No. N62472-90-D-1298. ENSR, Acton, Massachusetts.

EPA 1989a. Risk Assessment Guidance for Superfund, Vol 7: Human Health Evaluation Manual (Part A, EPA/540/1-89/002. U.S. EPA, Washington D.C. December 1989. pp 4-5.

EPA, 1989b. Guidance Document on the Statistical Analysis of Ground-Water Monitoring Data at RCRA Facilities. Interim Final Guidance. EPA 530/SW-89-026. Office of Solid Waste. Washington, DC.

EPA, 1992a. Statistical Analysis of Ground-Water Monitoring Data at RCRA Facilities; Addendum to Interim Final Guidance. Office of Solid Waste Permits and State Programs Division. Washington, DC. July.

EPA, 1992b. Methods for Evaluating the Attainment of Cleanup Standards. Volume 3: Reference-Based Standards for Soils and Solid Media. Office of Policy, Planning, and Evaluation. Washington, DC.

EPA 1995. Determination of Background Concentrations of Inorganics in Soils and Sediments at Hazardous Waste Sites. EPA/540/5-96/500. U.S. EPA, Washington, D.C. December, 1995.

EPA, 1996. Guidance for Data Quality Assessment. Pre- Publication Copy. Final. EPA QA/G-9. Quality Assurance Division. Washington, DC. February.

Gehan, E.A., 1965. A Generalized Wilcoxon Test for Comparing Arbitrarily Singly-Censored Samples. Biometrika. Volume 52, pp. 203-223.

Gilbert, R.O. 1993. Letter to Beverly Ramsey, Systematic Management Services, Incorporated. Battelle Pacific Northwest Laboratories. Richland, Washington. July 30.

Gilbert, R.O., 1987. Statistical Methods for Environmental Pollution Monitoring. Van Nostrand and Reinhold, New York, NY.

Halliburton NUS Corp. 1995. Final Work/Quality Assurance Project Plan. Naragansett Bay Ecorisk and Monitoring for Navy Sites. July 28, 1995.

Millard, S.P. and Deverel, S.J., 1988. Nonparametric Statistical Methods for Comparing Two Sites Based on Data With Multiple Nondetect Limits. Water Resources Research. Volume 24, No. 12, pp. 2087-2098. December.

Naval Energy and Environmental Support Activity, "Laboratory Quality Assurance Contractor Guide for the Installation Restoration Program." NEESA 20.2-054.04, Environmental protection Department, Port Hueneme, CA, April 1991.

Naval Energy and Environmental Support Activity, "Sampling and Chemical Analysis Quality Assurance Requirements for the Navy Installation Restoration Program." NEESA 20.2-047B, Environmental Protection Department, Port Hueneme, CA, June 1988.

New England Division, Army Corps of Engineers, January 1988. "Gould Island, McAllister Point and Allen Harbor Sediment and Mussel Sampling." Department of the Army, Hubbardston, MA.

OHM Remediation Services Corp., 1996, "Final Closure Report for Remedial Action, Derecktor Shipyard Sand Blast Grit Removal, McAllister Point Landfill, NETC-Newport, Rhode Island. OHM Remediation Services Corp., Hopkinton, MA.

Quinn, J.G., King, I.W., Cairns, R.W., and Gangemi, P.F., 1994. "Chemical Contaminants in Marine Sediments from The Former Derecktor Shipyard at Coddington Cove, Newport, Rhode Island." Geochemical and Environmental Research Group, Texas A&M University, College Station, Texas.

RIDEM (Rhode Island Department of Environmental Management), 1996. "Rules and Regulations for the Investigation and Remediation of Hazardous Material Releases". Regulation DEM-DSR-01-93.

SAIC and The University of Rhode Island, May 1997, "Final Derecktor Shipyard Marine Ecological Risk Assessment Report, Prepared under Contract to Brown and Root Environmental under CLEAN Contract Task Order No. 254, Northern Division of Naval Facilities Engineering Command.

TRC Environmental Corporation, January 1992, "Remedial Investigation Report for The Naval Education and Training Center-Newport, Rhode Island." Northern Division, NAVFAC, Contract No. N62472-86-C-1282. TRC, Windsor, Connecticut.

TRC Environmental Corporation, July 1994, "Remedial Investigation Report: McAllister Point Landfill, NETC-Newport, Rhode Island." Northern Division, NAVFAC, Contract No. N62472-86-C-1282. TRC, Windsor, Connecticut.

TtNUS, 1997b. Phone conversation with B. Cembrola, Naval War College Museum Curator. December 8, 1997.

TtNUS, June 1997a, "Site Assessment Screening Evaluation, Former Derecktor Shipyard, NETC-Newport, Rhode Island." Northern Division, NAVFAC, Contract No. N62472-90-D-1298. TtNUS, Wilmington, Massachusetts.

United States Geological Survey (USGS) "Element Concentrations in Soils and Other Surficial Materials of the Conterminous United States", Professional Paper 1270, Soils in the Eastern United States, 1984.

APPENDIX A

HEALTH AND SAFETY PLAN

(Intentionally Omitted)

APPENDIX B

STANDARD OPERATING PROCEDURES

TABLE OF CONTENTS

SECTION		PAGE
1.0	PURPOSE	3
2.0	SCOPE	3
3.0	GLOSSARY	3
4.0	RESPONSIBILITIES	3
5.0	PROCEDURES	3
5.1	Site Logbook	3
5.1.1	General	3
5.1.2	Photographs	4
5.2	Site Notebooks	4
5.3	Sample Forms	5
5.3.1	Sample Collection, Labeling, Shipment and Request for Analysis	5
5.3.2	Geohydrological and Geotechnical Forms	6
5.3.3	Equipment Calibration and Maintenance Form	6
5.4	Field Reports	7
5.4.1	Weekly Status Reports	7
5.4.2	Daily Activities Report	7
6.0	ATTACHMENTS	8

TABLE OF CONTENTS (Continued)

ATTACHMENTS (EXAMPLES) **PAGE**

A	TYPICAL SITE LOGBOOK ENTRY	9
B-1	EXAMPLE GROUNDWATER SAMPLE LOG SHEET	10
B-2	EXAMPLE SURFACE WATER SAMPLE LOG SHEET	11
B-3	EXAMPLE SOIL/SEDIMENT SAMPLE LOG SHEET	12
B-4	CONTAINER SAMPLE LOG SHEET FORM	13
B-5	SAMPLE LABEL	14
B-6	CHAIN-OF-CUSTODY RECORD FORM	15
B-7	CHAIN-OF-CUSTODY SEAL	16
C-1	EXAMPLE GROUNDWATER LEVEL MEASUREMENT SHEET	17
C-2	EXAMPLE PUMPING TEST DATA SHEET	18
C-3	PACKER TEST REPORT FORM	19
C-4	EXAMPLE BORING LOG	20
C-5	EXAMPLE OVERBURDEN MONITORING WELL SHEET	22
C-5A	EXAMPLE OVERBURDEN MONITORING WELL SHEET (FLUSHMOUNT)	23
C-6	EXAMPLE CONFINING LAYER MONITORING WELL SHEET	24
C-7	EXAMPLE BEDROCK MONITORING WELL SHEET - OPEN HOLE WELL	25
C-8	EXAMPLE BEDROCK MONITORING WELL SHEET, WELL INSTALLED IN BEDROCK	26
C-8A	EXAMPLE BEDROCK MONITORING WELL SHEET, WELL INSTALLED IN BEDROCK (FLUSHMOUNT)	27
C-9	EXAMPLE TEST PIT LOG	28
D	EXAMPLE EQUIPMENT CALIBRATION LOG	29
E	EXAMPLE DAILY ACTIVITIES RECORD	30
F	FIELD TRIP SUMMARY REPORT	31

1.0 PURPOSE

The purpose of this Standard Operating Procedure (SOP) is to identify and designate the field data record forms, logs and reports generally initiated and maintained for documenting Brown & Root Environmental field activities.

2.0 SCOPE

Documents presented within this procedure (or equivalents) shall be used for all Brown & Root Environmental field activities, as applicable. Other or additional documents may be required by specific client contracts.

3.0 GLOSSARY

None

4.0 RESPONSIBILITIES

Project Manager - The Project Manager is responsible for obtaining hardbound, controlled-distribution logbooks (from the appropriate source), as needed. In addition, the Project Manager is responsible for placing all forms used in site activities (i.e., records, field reports, and upon the completion of field work, the site logbook) in the project's central file.

Field Operations Leader (FOL) - The Field Operations Leader is responsible for ensuring that the site logbook, notebooks, and all appropriate forms and field reports illustrated in this guideline (and any additional forms required by the contract) are correctly used, accurately filled out, and completed in the required time-frame.

5.0 PROCEDURES

5.1 Site Logbook

5.1.1 General

The site logbook is a hard-bound, paginated controlled-distribution record book in which all major onsite activities are documented. At a minimum, the following activities/events shall be recorded (daily) in the site logbook:

- All field personnel present
- Arrival/departure of site visitors
- Arrival/departure of equipment
- Start or completion of borehole/trench/monitoring well installation or sampling activities
- Daily onsite activities performed each day
- Sample pickup information
- Health and Safety issues (level of protection observed, etc.)
- Weather conditions

A site logbook shall be maintained for each project. The site logbook shall be initiated at the start of the first onsite activity (e.g., site visit or initial reconnaissance survey). Entries are to be made for every day that onsite activities take place which involve Brown & Root Environmental or subcontractor personnel. Upon completion of the fieldwork, the site logbook must become part of the project's central file.

The following information must be recorded on the cover of each site logbook:

- Project name
- Brown & Root Environmental project number
- Sequential book number
- Start date
- End date

Information recorded daily in the site logbook need not be duplicated in other field notebooks (see Section 5.2), but must summarize the contents of these other notebooks and refer to specific page locations in these notebooks for detailed information (where applicable). An example of a typical site logbook entry is shown in Attachment A.

If measurements are made at any location, the measurements and equipment used must either be recorded in the site logbook or reference must be made to the site notebook in which the measurements are recorded (see Attachment A).

All logbook, notebook, and log sheet entries shall be made in indelible ink (black pen is preferred). No erasures are permitted. If an incorrect entry is made, the data shall be crossed out with a single strike mark, and initialed and dated. At the completion of entries by any individual, the logbook pages used must be signed and dated. The site logbook must also be signed by the Field Operations Leader at the end of each day.

5.1.2 Photographs

When movies, slides, or photographs are taken of a site or any monitoring location, they must be numbered sequentially to correspond to logbook entries. The name of the photographer, date, time, site location, site description, and weather conditions must be entered in the logbook as the photographs are taken. A series entry may be used for rapid-sequence photographs. The photographer is not required to record the aperture settings and shutter speeds for photographs taken within the normal automatic exposure range. However, special lenses, films, filters, and other image-enhancement techniques must be noted in the logbook. If possible, such techniques shall be avoided, since they can adversely affect the admissibility of photographs as evidence. Chain-of-custody procedures depend upon the subject matter, type of film, and the processing it requires. Film used for aerial photography, confidential information, or criminal investigation require chain-of-custody procedures. Adequate logbook notation and receipts must be compiled to account for routine film processing. Once processed, the slides of photographic prints shall be consecutively numbered and labeled according to the logbook descriptions. The site photographs and associated negatives must be docketed into the project's central file.

5.2 Site Notebooks

Key field team personnel may maintain a separate dedicated notebook to document the pertinent field activities conducted directly under their supervision. For example, on large projects with multiple investigative sites and varying operating conditions, the Health and Safety Officer may elect to maintain a separate site notebook. Where several drill rigs are in operation simultaneously, each site geologist assigned to oversee a rig must maintain a site notebook.

5.3 Sample Forms

A summary of the forms illustrated in this procedure is shown as the listing of Attachments in the Table of Contents for this SOP. Forms may be altered or revised for project-specific needs contingent upon client approval. Care must be taken to ensure that all essential information can be documented. Guidelines for completing these forms can be found in the related sampling SOP.

5.3.1 Sample Collection, Labeling, Shipment and Request for Analysis

5.3.1.1 Sample Log Sheet

Sample Log Sheets are used to record specified types of data while sampling. Attachments B-1 to B-4 are examples of Sample Log Sheets. The data recorded on these sheets are useful in describing the waste source and sample as well as pointing out any problems encountered during sampling. A log sheet must be completed for each sample obtained, including field quality control (QC) samples.

5.3.1.2 Sample Label

A typical sample label is illustrated in Attachment B-5. Adhesive labels must be completed and applied to every sample container. Sample labels can usually be obtained from the appropriate Program source or are supplied from the laboratory subcontractor.

5.3.1.3 Chain-of-Custody Record Form

The Chain-of-Custody (COC) Record is a multi-part form that is initiated as samples are acquired and accompanies a sample (or group of samples) as they are transferred from person to person. This form must be used for any samples collected for chemical or geotechnical analysis whether the analyses are performed on site or off site. One part of the completed COC form is retained by the field crew while the other two or three portions are sent to the laboratory. The original (top, signed copy) and extra carbonless copies of the COC form shall be placed inside a large Ziploc-type bag and taped inside the lid of the shipping cooler. If multiple coolers are sent but are included on one COC form, the COC form should be sent with the first cooler. The COC form should then state how many coolers are included with that shipment. An example of a Chain-of-Custody Record form is provided as Attachment B-6. A supply of these forms are purchased and stocked by the field department of the various Brown & Root Environmental offices. Alternately, COC forms supplied by the laboratory may be used. Once the samples are received at the laboratory, the sample cooler and contents are checked and any problems are noted on the enclosed COC form (any discrepancies between the sample labels and COC form and any other problems that are noted are resolved through communication between the laboratory point-of-contact and the Brown & Root Environmental Project Manager). The COC form is signed and one of the remaining two parts are retained by the laboratory while the last part becomes part of the samples' corresponding analytical data package. Internal laboratory chain-of-custody procedures are documented in the Laboratory Quality Assurance Plan (LQAP).

5.3.1.4 Chain-of-Custody Seal

Attachment B-7 is an example of a custody seal. The Custody seal is also an adhesive-backed label. It is part of a chain-of-custody process and is used to prevent tampering with samples after they have been collected in the field and sealed in coolers for transit to the laboratory. The COC seals are signed and dated by the samplers and affixed across the opening edges of each cooler containing environmental samples. COC seals may be available from the laboratory; these seals may also be purchased from a supplier.

5.3.2 Geohydrological and Geotechnical Forms

5.3.2.1 Groundwater Level Measurement Sheet

A groundwater level measurement sheet, shown in Attachment C-1 must be filled out for each round of water level measurements made at a site.

5.3.2.2 Data Sheet for Pumping Test

During the performance of a pumping test (or an in-situ hydraulic conductivity test), a large amount of data must be recorded, often within a short time period. The pumping test data sheet (Attachment C-2) facilitates this task by standardizing the data collection format, and allowing the time interval for collection to be laid out in advance.

5.3.2.3 Packer Test Report Form

A packer test report form shown in Attachment C-3 must be completed for each well upon which a packer test is conducted following well installation.

5.3.2.4 Summary Log of Boring

During the progress of each boring, a log of the materials encountered, operation and driving of casing, and location of samples must be kept. The Summary Log of Boring (Attachment C-4) is used for this purpose and must be completed for each soil boring performed. In addition, if volatile organics are monitored on cores, samples or cuttings from the borehole (using HNU or OVA detectors), these results must be entered on the boring log (under the "Remarks" column) at the appropriate depth. The "Remarks" column can also be used to subsequently enter the laboratory sample number and the concentration of a few key analytical results. This feature allows direct comparison of contaminant concentrations with soil characteristics.

5.3.2.5 Monitoring Well Construction Details Form

A Monitoring Well Construction Details Form must be completed for every monitoring well piezometer or temporary well point installed. This form contains specific information on length and type of well riser pipe and screen, backfill, filter pack, annular seal and grout characteristics, and surface seal characteristics. This information is important in evaluating the performance of the monitoring well, particularly in areas where water levels show temporal variation, or where there are multiple (immiscible) phases of contaminants. Depending on the type of monitoring well (in overburden or bedrock), different forms are used (see Attachments C-5 through C-9). Similar forms are used for flush-mount well completions. The Monitoring Well Construction Details Form is not a controlled document.

5.3.2.6 Test Pit Log

When a test pit or trench is constructed for investigative or sampling purposes, a Test Pit Log (Attachment C-10) must be filled out by the responsible field geologist or sampling technician.

5.3.3 Equipment Calibration and Maintenance Form

The calibration or standardization of monitoring, measuring or test equipment is necessary to assure the proper operation and response of the equipment, to document the accuracy, precision or sensitivity of the measurement, and determine if correction should be applied to the readings. Some items of

equipment require frequent calibration, others infrequent. Some are calibrated by the manufacturer, others by the user.

Each instrument requiring calibration has its own Equipment Calibration Log (Attachment D) which documents that the manufacturer's instructions were followed for calibration of the equipment, including frequency and type of standard or calibration device. An Equipment Calibration Log must be maintained for each electronic measuring device used in the field; entries must be made for each day the equipment is used.

5.4 Field Reports

The primary means of recording onsite activities is the site logbook. Other field notebooks may also be maintained. These logbooks and notebooks (and supporting forms) contain detailed information required for data interpretation or documentation, but are not easily useful for tracking and reporting of progress. Furthermore, the field logbook/notebooks remain onsite for extended periods of time and are thus not accessible for timely review by project management.

5.4.1 Weekly Status Reports

To facilitate timely review by project management, Xeroxed copies of logbook/notebook entries may be made for internal use. To provide timely oversight of onsite contractors, Daily Activities Reports are completed and submitted as described below.

It should be noted that in addition to the summaries described herein, other summary reports may also be contractually required.

5.4.2 Daily Activities Report

5.4.2.1 Description

The Daily Activities Report (DAR) documents the activities and progress for each day's field work. This report must be filled out on a daily basis whenever there are drilling, test pitting, well construction, or other related activities occurring which involve subcontractor personnel. These sheets summarize the work performed and form the basis of payment to subcontractors (Attachment E is an example of a Daily Activities Report).

5.4.2.2 Responsibilities

It is the responsibility of the rig geologist to complete the DAR and obtain the driller's signature acknowledging that the times and quantities of material entered are correct.

5.4.2.3 Submittal and Approval

At the end of the shift, the rig geologist must submit the Daily Activities Report to the Field Operations Leader (FOL) for review and filing. The Daily Activities Report is not a formal report and thus requires no further approval. The DAR reports are retained by the FOL for use in preparing the site logbook and in preparing weekly status reports for submission to the Project Manager.

6.0 ATTACHMENTS

Attachment A	TYPICAL SITE LOGBOOK ENTRY
Attachment B-1	EXAMPLE GROUNDWATER SAMPLE LOG SHEET
Attachment B-2	EXAMPLE SURFACE WATER SAMPLE LOG SHEET
Attachment B-3	EXAMPLE SOIL/SEDIMENT SAMPLE LOG SHEET
Attachment B-4	CONTAINER SAMPLE LOG SHEET FORM
Attachment B-5	SAMPLE LABEL
Attachment B-6	CHAIN-OF-CUSTODY RECORD FORM
Attachment B-7	CHAIN-OF-CUSTODY SEAL
Attachment C-1	EXAMPLE GROUNDWATER LEVEL MEASUREMENT SHEET
Attachment C-2	EXAMPLE PUMPING TEST DATA SHEET
Attachment C-3	PACKER TEST REPORT FORM
Attachment C-4	EXAMPLE BORING LOG
Attachment C-5	EXAMPLE OVERBURDEN MONITORING WELL SHEET
Attachment C-5A	EXAMPLE OVERBURDEN MONITORING WELL SHEET (FLUSHMOUNT)
Attachment C-6	EXAMPLE CONFINING LAYER MONITORING WELL SHEET
Attachment C-7	EXAMPLE BEDROCK MONITORING WELL SHEET - OPEN HOLE WELL
Attachment C-8	EXAMPLE BEDROCK MONITORING WELL SHEET - WELL INSTALLED IN BEDROCK
Attachment C-8A	EXAMPLE BEDROCK MONITORING WELL SHEET - WELL INSTALLED IN BEDROCK (FLUSHMOUNT)
Attachment C-9	EXAMPLE TEST PIT LOG
Attachment D	EXAMPLE EQUIPMENT CALIBRATION LOG
Attachment E	EXAMPLE DAILY ACTIVITIES RECORD
Attachment F	FIELD TRIP SUMMARY REPORT

ATTACHMENT A
TYPICAL SITE LOGBOOK ENTRY

START TIME: _____ DATE: _____

SITE LEADER: _____

PERSONNEL:

BROWN & ROOT ENV.	DRILLER	EPA
_____	_____	_____
_____	_____	_____
_____	_____	_____

WEATHER: Clear, 68°F, 2-5 mph wind from SE

ACTIVITIES.

1. Steam jenney and fire hoses were set up.
2. Drilling activities at well ____ resumes. Rig geologist was _____. See Geologist's Notebook, No. 1, page 29-30, for details of drilling activity. Sample No. 123-21-S4 collected; see sample logbook, page 42. Drilling activities completed at 11:50 and a 4-inch stainless steel well installed. See Geologist's Notebook, No. 1, page 31, and well construction details for well _____.
3. Drilling rig No. 2 steam-cleaned at decontamination pit. Then set up at location of well _____.
4. Well _____ drilled. Rig geologist was _____. See Geologist's Notebook, No. 2, page ____ for details of drilling activities. Sample numbers 123-22-S1, 123-22-S2, and 123-22-S3 collected; see sample logbook, pages 43, 44, and 45.
5. Well _____ was developed. Seven 55-gallon drums were filled in the flushing stage. The well was then pumped using the pitcher pump for 1 hour. At the end of the hour, water pumped from well was "sand free."
6. EPA remedial project manger arrives on site at 14:25 hours.
7. Large dump truck arrives at 14:45 and is steam-cleaned. Backhoe and dump truck set up over test pit _____.
8. Test pit _____ dug with cuttings placed in dump truck. Rig geologist was _____. See Geologist's Notebook, No. 1, page 32, for details of test pit activities. Test pit subsequently filled. No samples taken for chemical analysis. Du to shallow groundwater table, filling in of test pit ___ resulted in a very soft and wet area. A mound was developed and the area roped off.
9. Express carrier picked up samples (see Sample Logbook, pages 42 through 45) at 17:50 hours. Site activities terminated at 18:22 hours. All personnel off site, gate locked.

_____
Field Operations Leader

ATTACHMENT B-1
EXAMPLE GROUNDWATER SAMPLE LOG SHEET

GROUNDWATER SAMPLE LOG SHEET

Page ____ of ____

Project Site Name: _____

Project No.: _____

☐ Domestic Well Data
☐ Monitoring Well Data
☐ Other Well Type: _____
☐ QA Sample Type: _____

Sample ID No.: _____

Sample Location: _____

Sampled By: _____

C.O.C. No.: _____

Sampling Data

Date: _____ Time: _____ Method: _____	pH	D.O.	Temp. (°C)	Turbidity	Color	TBD	TBD	TBD

Purge Data

Date: _____ Method: _____	Volume	pH	D.O.	Temp. (°C)	Turbidity	Color	TBD	TBD
	Initial							
Monitor Reading (ppm):	1							
Well Casing Dia. & Material Type:	2							
	3							
Total Well Depth (TD):	4							
Static Water Level (WL):	5							
TD-WL (ft.) =								
One Casing Volume: (gal/L)								
Start Purge (hrs.):								
End Purge (hrs.):								
Total Purge Time (min):								
Total Amount Purged (gal/L):								

Analysis	Preservative	Container Requirements	Collected (✓)

Observations/Notes:

Circle if Applicable:		Signature(s):
MS/MSD	Duplicate ID No:	

TBD: To Be Determined

ATTACHMENT B-2
EXAMPLE SURFACE WATER SAMPLING LOG SHEET

SURFACE WATER SAMPLING LOG SHEET

Page ___ of ___

Project Site Name: _____ Sample ID No.: _____

Project No.: _____ Sample Location: _____

☐ Spring ☐ Pond
☐ Stream ☐ Lake
☐ Other _____
☐ QA Sample Type: _____

Sampled By: _____

C.O.C. No.: _____

Sample Data							
Date and Time			Method			Depth	
pH	S.C.	Temp (°C)	Turbidity	Color	TBD	TBD	TBD

Analysis	Preservative	Container Requirements	Collected ✓

Observations/Notes:

Circle if Applicable:		Signature(s):
MS/MSD	Duplicate ID No.:	

TBD: To Be Determined

ATTACHMENT B-3
EXAMPLE SOIL/SEDIMENT SINGLE SAMPLE LOG SHEET

SOIL/SEDIMENT
SINGLE SAMPLE LOG SHEET

Page ___ of ___

Project Site Name: _____

Project No.: _____

- ☐ Surface Soil
- ☐ Subsurface Soil
- ☐ Sediment
- ☐ Other _____
- ☐ QA Sample Type: _____

Sample ID No.: _____

Sample Location: _____

Sampled By: _____

C.O.C. No.: _____

Sample Method:	Sample	Time	Color/Description
Depth Sampled:			
Sample Date and Time:			
Type of Sample			
☐ Grab			
☐ Composite			
☐ Grab-Composite			
☐ High Concentration	Color	Description: (Sand, Clay, Dry, Moist, Wet, etc.)	
☐ Low Concentration			

[illegible]	[illegible]	[illegible]

Map:

Observations/Notes:

Circle if Applicable:		Signature(s):
MS/MSD	Duplicate ID No:	

ATTACHMENT B-4
CONTAINER SAMPLE LOG SHEET FORM

Brown & Root Environmental

Page ___ of _

☐ Container Data

Case #: _____

By: _____

Project Site Name: _____ Project Site No. _____

Brown & Root Env. Source No. _____ Source Location: _____

Container Source	Container Description
☐ Drum ☐ Bung Top ☐ Lever Lock ☐ Bolted Ring ☐ Other _____ ☐ Bag/Sack ☐ Tank ☐ Other _____	Color: _____ Condition: _____ Markings: _____ Vol. of Contents: _____ Other: _____

Disposition of Sample	Sample Description			
☐ Container Sampled ☐ Container opened but not sampled. Reason: _____ ☐ Container not opened. Reason: _____		Layer 1	Layer 2	Layer 3
	Phase	☐Sol. ☐Liq.	☐Sol. ☐Liq.	☐Sol. ☐Liq.
	Color	_____	_____	_____
	Viscosity	☐L ☐M ☐H	☐L ☐M ☐H	☐L ☐M ☐H
	% of Total Volume	_____	_____	_____
	Other	_____	_____	_____

Monitor Reading:	Type of Sample	
Sample Method:	☐ Low Concentration ☐ High Concentration	☐ Grab ☐ Composite ☐ Grab-composite
Sample Date & Time:	Sample Identification	Organic / Inorganic
Sampled by:		
Signature(s):		
	Date Shipped	
Analysis:	Time Shipped	
	Lab	
	Volume	

ATTACHMENT B-5

SAMPLE LABEL

Brown & Root Environmental PROJECT. _____

STATION LOCATION: _____

DATE: ____/____/____ TIME: _____ hrs.

MEDIA: WATER ☐ SOIL ☐ SEDIMENT ☐ _____ ☐

CONCENTRATION: LOW ☐ MEDIUM ☐ HIGH ☐

TYPE: GRAB ☐ COMPOSITE ☐

ANALYSIS		PRESERVATION	
VOA ☐	BNAs ☐	Cool to 4°C	☐
PCBs ☐	PESTICIDES ☐	HNO_3 to pH < 2	☐
METALS: TOTAL ☐	DISSOLVED ☐	NaOH to pH > 12	☐
CYANIDE ☐		_____	☐
_____ ☐			

Sampled by: _____

Remarks:

ATTACHMENT B-6

CHAIN-OF-CUSTODY RECORD FORM
(Original is 8.5 x 11")

PROJECT NO	PROJECT NAME	NO. OF CONTAINERS	REMARKS
SAMPLERS. (Signature)			

STA NO	DATE	TIME			STATION LOCATION							

Relinquished by. (Signature)	Date/Time	Received by. (Signature)	Relinquished by: (Signature)	Date/Time	Received by. (Signature)
Relinquished by. (Signature)	Date/Time	Received by. (Signature)	Relinquished by: (Signature)	Date/Time	Received by. (Signature)
Relinquished by. (Signature)	Date/Time	Received for Laboratory by: (Signature)	Date/Time	Remarks:	

ATTACHMENT B-7

CHAIN-OF-CUSTODY SEAL

CUSTODY SEAL	**CUSTODY SEAL**
Date	**Date**
Signature	**Signature**

ATTACHMENT C-1
EXAMPLE GROUNDWATER LEVEL MEASUREMENT SHEET

GROUNDWATER LEVEL MEASUREMENT SHEET

Page ___ of ___

PROJECT NAME: _____ LOCATION: _____
PROJECT NUMBER: _____ MEASURING DEVICE. _____
PERSONNEL: _____ ADJUSTMENT FACTOR: _____
DATE: _____ REMARKS: _____
WEATHER CONDITIONS: _____

Well or Piezometer Number	Time	Elevation of Reference Point (Feet)*	Water Level Indicator Reading (Feet)*	Groundwater Elevation (Feet)*	Comments

*Measurements to nearest 0 01 foot.

Signature(s): _____

ATTACHMENT C-2
EXAMPLE PUMPING TEST DATA SHEET

PUMPING TEST DATA SHEET

Page ___ of ___

PROJECT NAME. _____
PROJECT NUMBER: _____
PUMPING TEST: [ ]
TEST NUMBER: _____
METHOD OF MEASUREMENT: _____
DATE(s): _____
STATIC H_2O LEVEL (ft) (SO) _____

PUMPING WELL NUMBER: _____
MEASURED WELL NUMBER: _____
STEP DRAW DOWN TEST [ ]
MONITORING POINT: _____
DEPTH CORRECTION (ft) _____
PUMP SETTING (Ft. below monitoring point): _____
DISTANCE FROM PUMPING WELL (ft) (r): _____

PUMPING TEST PERFORMED BY: _____
REMARKS: _____

MILITARY TIME	ELAPSED TIME SINCE PUMP START OR STOP (Min.)	WATER LEVEL (Ft.)	CORRECTION (Ft.)	DRAW DOWN OR RECOVERY (Ft.)	FLOW METER READING (Gals.)	PUMPING RATE (GPM)	REMARKS

SIGNATURE(s): _____

ATTACHMENT C-3

PACKER TEST REPORT FORM

PROJECT: _____ PROJECT NO.: _____ TEST NO: _____ PAGE ____ OF ____

BORING NO : _____ CASING DEPTH: _____ CONTRACTOR: _____ STATIC WATER LEVEL _____

TEST INTERVAL: _____ BY: _____ CHECKED: _____ PACKER PRESSURE _____

Flow Test					Calculated Results							
Pressure P (psi)	Elapsed time (min)	Flow Reading	Δ Flow, ΔQ (ft³)	Δ Flow, ΔQ (gal)	Flow Rate Q (gallons)	H_1* (ft)	Hp(ft) = 2.31·(psi)	H_2* (ft)	H = Hp + (H1 or H2)	Cp	K (ft/yr) = Cp Q/H	K (cm/sec) = 9.67 x 10⁻⁶ K (ft/yr)

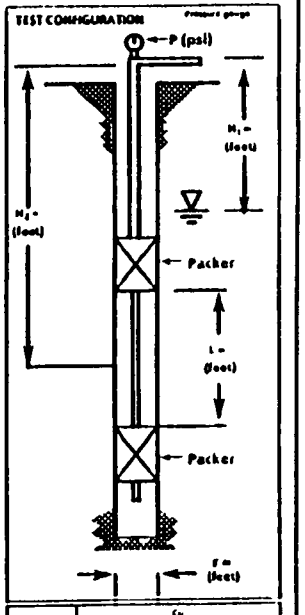

Length of test Section in feet, r	Cp Standing Rat hole (r = 0.5 ft)	(r = 0.375 ft)	(r = 0.25 ft)	(r = 0.167 ft)
1	31 000	28 500	25 000	22 500
2	19 000	18 000	16 000	15 500
3	9 000	8 000	8 000	8 000
5	6 000	6 500	6 500	5 000
10	5 700	5 000	5 000	4 500
15	4 100	3 000	3 000	3 000
20	3 200	3 100	3 000	2 000

CP = (1/(2 x L)) ln(L/r) (70 315 S)
7 48 Gallons = 1 Ft³
1 psi = 2 31 ft head

* H_1 is used when the test length is below the water table
H_2 is used when the test length is above the water table

Remarks _____

ATTACHMENT C-4
EXAMPLE BORING LOG

BORING LOG Page___ of___

PROJECT NAME: _____ BORING NUMBER: _____
PROJECT NUMBER: _____ DATE : _____
DRILLING COMPANY. _____ GEOLOGIST: _____
WATER LEVEL DATA: _____

Sample No. and Type or RQD	Depth (Ft.) or Run No.	Blows/6" or RQD (%)	Sample Recovery Sample Length	Utilized Change (Depth/Ft.) or Sampled Interval	MATERIAL DESCRIPTION Soil Description Consistency or Rock Hardness	Color	Material Classification	*USCS	Remarks	PID or FID Reading (ppm)

*When rock coring enter rock brokeness.

CONVERTED TO WELL . ___ Yes ___ No: WELL I D.#: _____
REMARKS. _____

Signature(s): _____

LEGEND

SOIL TERMS

UNIFIED SOIL CLASSIFICATION (USCS)

COARSE-GRAINED SOILS
More Than Half of Material is LARGER Than No. 200 Sieve Size

FIELD IDENTIFICATION PROCEDURES (Excluding Particles Larger Than 3 Inches and Basing fractions on Estimated Weights)			GROUP SYMBOL	TYPICAL NAMES
GRAVELS (50%(+)>1/4"Ø)	CLEAN GRAVELS (Low % Fines)	Wide range in grain size and substantial amounts of all intermediate particle sizes.	GW	Well graded gravels, gravel-sand mixtures, little or no fines.
		Predominantly one size or a range of sizes with some intermediate sizes missing.	GP	Poorly graded gravels, gravel-sand mixtures, little or no fines
	GRAVELS W/FINES (High % Fines)	Non plastic fines (for identification procedures, see ML)	GM	Silty gravels, poorly graded gravel-sand silt mixtures
		Plastic fines (for identification procedures, see CL)	GC	Clayey gravels, poorly graded gravel sand-clay mixtures.
SANDS 50%(+)<1/4"Ø	CLEAN SANDS (Low % Fines)	Wide range in grain size and substantial amounts of all intermediate particle sizes.	SW	Well graded sand, gravelly sands, little or no fines.
		Predominantly one size or a range of sizes with some intermediate sizes missing.	SP	Poorly graded sands, gravelly sands, little or no fines
	SANDS W/FINES (High % Fines)	Non plastic fines (for identification procedures, see ML)	SM	Silty sands, poorly graded sand-silt mixtures.
		Plastic fines (for identification procedures, see CL)	SC	Clayey sands, poorly graded sand-clay mixtures

FINE-GRAINED SOILS
More Than Half of Material is SMALLER Than No. 200 Sieve Size

FIELD IDENTIFICATION PROCEDURES (Excluding Particles Larger Than 3 Inches and Basing fractions on Estimated Weights)					GROUP SYMBOL	TYPICAL NAMES
	Identification Procedures on Fraction Smaller Than No. 40 Sieve Size					
	DRY STRENGTH (Crushing Characteristics)	DILATANCY (Reaction to Shaking)	TOUGHNESS (Consistency Near Plastic Limit)			
SILTS AND CLAYS Liquid Limit <50	None to Slight	Quick to Slow	None		ML	Inorganic silts and very fine sands, rock flour, silty or clayey fine sands with slight plasticity.
	Medium to High	None to Very Slow	Medium		CL	Inorganic clays of low to medium plasticity, gravelly clays, sandy clays, silty clays, lean clays.
	Slight to Medium	Slow	Slight		OL	Organic silts and organic silt clays of low plasticity.
SILTS AND CLAYS Liquid Limit >50	Slight to Medium	Slow to None	Slight to Medium		MH	Inorganic silts, micaceous or diatomaceous fine sandy or silty soils, elastic silts
	High to Very High	None	High		CH	Inorganic clays of high plasticity, fat clays.
	Medium to High	None to Very Slow	Slight to Medium		OH	Organic clays of medium to high plasticity.
HIGHLY ORGANIC SOILS	Readily identified by color, odor, spongy feel and frequently by fibrous texture				PT	Peat and other organic soils

Boundary classifications: Soils possessing characteristics of two groups are designated by combining group symbols for example, GW-GC, well graded gravel-sand mixture with clay binder
All sieve sizes on this chart are U.S. Standard

DENSITY OF GRANULAR SOILS

DESIGNATION	STANDARD PENETRATION RESISTANCE BLOWS/FOOT
Very Loose	0-4
Loose	5-10
Medium Loose	11-30
Dense	31-50
Very Dense	Over 50

CONSISTENCY OF COHESIVE SOILS

CONSISTENCY	UNC COMPRESSIVE STRENGTH (TONS/SQ. FT.)	STANDARD PENETRATION RESISTANCE BLOWS/FOOT	FIELD IDENTIFICATION METHODS
Very Soft	Less than 0.25	0 to 2	Easily penetrated several inches by fist
Soft	0.25 to 0.50	2 to 4	Easily penetrated several inches by thumb.
Medium Stiff	0.50 to 1.0	4 to 8	Can be penetrated several inches by thumb.
Stiff	1.0 to 2.0	8 to 15	Readily indented by thumb
Very Stiff	2.0 to 4.0	15 to 30	Readily indented by thumbnail
Hard	More than 4.0	Over 30	Indented with difficulty by thumbnail

ROCK TERMS

ROCK HARDNESS (FROM CORE SAMPLES)

Descriptive Terms	Screwdriver or Knife Effects	Hammer Effects
Soft	Easily Gouged	Crushes when pressed with hammer
Medium Soft	Can be Gouged	Breaks (one blow); crumbly edges
Medium Hard	Can be scratched	Breaks (one blow); sharp edges
Hard	Cannot be scratched	Breaks conchoidally (several blows); sharp edges

ROCK BROKENESS

Descriptive Terms	Abbreviation	Spacing
Very Broken	(V. Br.)	0-2"
Broken	(Br.)	2"-1'
Blocky	(Bl.)	1'-3"
Massive	(M.)	3'-10'

LEGEND:

SOIL SAMPLES TYPES
- S 2" Split Barrel Sample
- SI 3" O.D. Undisturbed Sample
- O Other Samples, Specify in Remarks

ROCK SAMPLES - TYPES
- X NX (Conventional) Core (1-1/8" O.D.)
- Q-HQ (Wireline) Core (1-7/8" O.D.)
- Z Other Core Sizes, Specify in Remarks

WATER LEVELS
- 12/10 ▽ 12.6' Initial Level w/Date & Depth
- 12/10 ▽ 12.6' Stabilized Level w/Date & Depth

ATTACHMENT C-5
EXAMPLE OVERBURDEN MONITORING WELL SHEET

BORING NO.: _____

OVERBURDEN
MONITORING WELL SHEET

PROJECT _____ LOCATION _____
PROJECT NO. _____ BORING _____
ELEVATION _____ DATE _____
FIELD GEOLOGIST _____

DRILLER _____
DRILLING METHOD _____
DEVELOPMENT METHOD _____

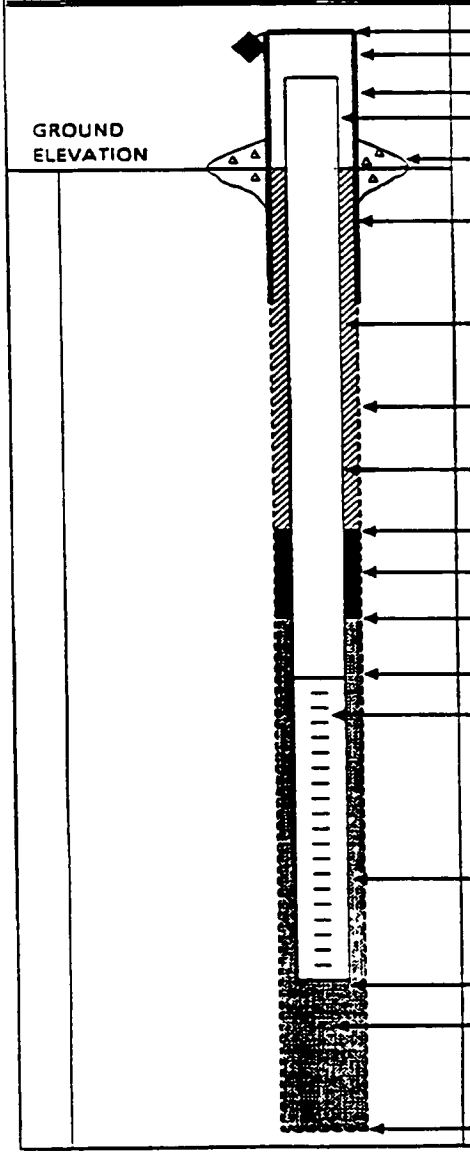

ELEVATION OF TOP OF SURFACE CASING . _____
ELEVATION OF TOP OF RISER PIPE: _____

STICK - UP TOP OF SURFACE CASING. _____
STICK - UP RISER PIPE . _____

TYPE OF SURFACE SEAL: _____

I.D. OF SURFACE CASING: _____
TYPE OF SURFACE CASING: _____

RISER PIPE I.D. _____
TYPE OF RISER PIPE: _____

BOREHOLE DIAMETER: _____

TYPE OF BACKFILL: _____

ELEVATION / DEPTH TOP OF SEAL: ____/____

TYPE OF SEAL: _____

DEPTH TOP OF SAND PACK. _____

ELEVATION / DEPTH TOP OF SCREEN: ____/____

TYPE OF SCREEN: _____

SLOT SIZE x LENGTH: _____

I.D. OF SCREEN: _____

TYPE OF SAND PACK: _____

ELEVATION / DEPTH BOTTOM OF SCREEN: ____/____

ELEVATION / DEPTH BOTTOM OF SAND PACK: ____/____

TYPE OF BACKFILL BELOW OBSERVATION WELL: _____

ELEVATION / DEPTH OF HOLE: ____/____

ATTACHMENT C-5A
EXAMPLE OVERBURDEN MONITORING WELL SHEET (FLUSHMOUNT)

BORING NO.: _____

MONITORING WELL SHEET

PROJECT _____ LOCATION _____ DRILLER _____
PROJECT NO. _____ BORING _____ DRILLING METHOD _____
ELEVATION _____ DATE _____ DEVELOPMENT METHOD _____
FIELD GEOLOGIST _____

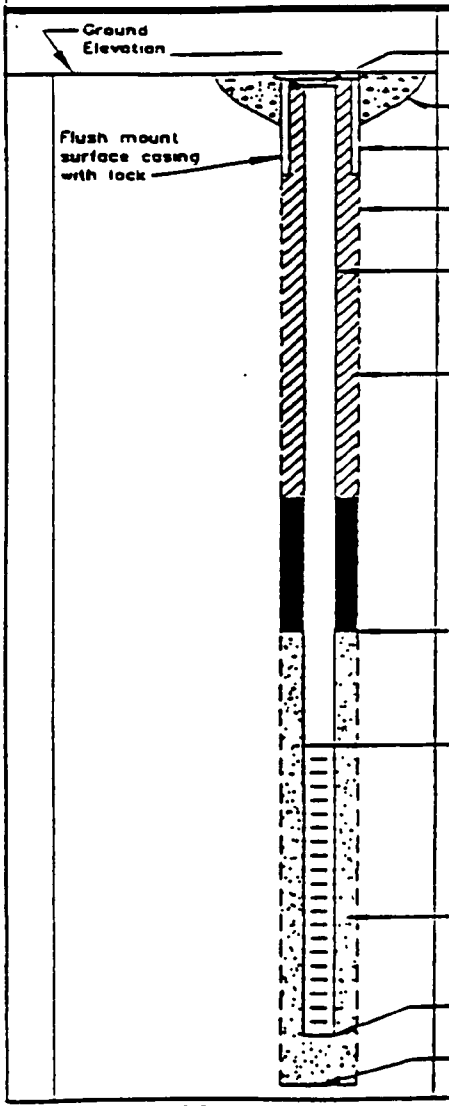

ELEVATION TOP OF RISER: _____
TYPE OF SURFACE SEAL: _____
TYPE OF PROTECTIVE CASING: _____
I.D. OF PROTECTIVE CASING: _____
DIAMETER OF HOLE: _____
TYPE OF RISER PIPE: _____
RISER PIPE I.D.: _____
TYPE OF BACKFILL/SEAL: _____
_____
DEPTH/ELEVATION TOP OF SAND: _____ / _____
DEPTH/ELEVATION TOP OF SCREEN: _____ / _____
TYPE OF SCREEN: _____
SLOT SIZE x LENGTH: _____
TYPE OF SAND PACK: _____
DIAMETER OF HOLE IN BEDROCK: _____
DEPTH/ELEVATION BOTTOM OF SCREEN: _____ / _____
DEPTH/ELEVATION BOTTOM OF SAND: _____ / _____
DEPTH/ELEVATION BOTTOM OF HOLE: _____ / _____
BACKFILL MATERIAL BELOW SAND: _____

ATTACHMENT C-6
EXAMPLE CONFINING LAYER MONITORING WELL SHEET

BORING NO.: _____

CONFINING LAYER
MONITORING WELL SHEET

PROJECT _____ LOCATION _____ DRILLER _____
PROJECT NO. _____ BORING _____ DRILLING METHOD _____
ELEVATION _____ DATE _____ DEVELOPMENT METHOD _____
FIELD GEOLOGIST _____

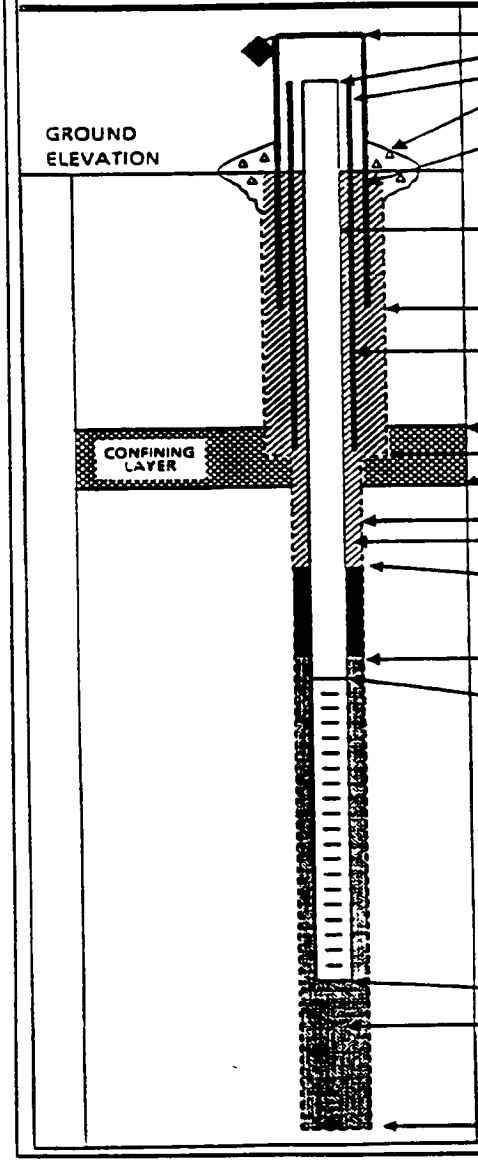

ELEVATION OF TOP OF SURFACE CASING : _____
ELEVATION OF TOP OF RISER PIPE: _____
ELEVATION TOP OF PERM. CASING: _____
TYPE OF SURFACE SEAL: _____

I.D OF SURFACE CASING: _____
TYPE OF SURFACE CASING: _____

RISER PIPE I.D. _____
TYPE OF RISER PIPE: _____

BOREHOLE DIAMETER: _____

PERM. CASING I.D. _____
TYPE OF CASING & BACKFILL: _____

ELEVATION / DEPTH TOP CONFINING LAYER: _____
ELEVATION / DEPTH BOTTOM OF CASING: _____
ELEVATION / DEPTH BOT. CONFINING LAYER: _____

BOREHOLE DIA. BELOW CASING: _____
TYPE OF BACKFILL: _____

ELEVATION / DEPTH TOP OF SEAL: _____
TYPE OF SEAL: _____

DEPTH TOP OF SAND PACK: _____

ELEVATION/DEPTH TOP OF SCREEN: _____
TYPE OF SCREEN: _____

TYPE OF SAND PACK: _____

ELEVATION / DEPTH BOTTOM OF SCREEN: _____

ELEVATION / DEPTH BOTTOM OF SAND PACK. _____
TYPE OF BACKFILL BELOW OBSERVATION WELL. _____

ELEVATION / DEPTH OF HOLE: _____

ATTACHMENT C-7
EXAMPLE BEDROCK MONITORING WELL SHEET - OPEN HOLE WELL

BORING NO : _____

BEDROCK
MONITORING WELL SHEET
OPEN HOLE WELL

PROJECT _____ LOCATION _____
PROJECT NO. _____ BORING _____
ELEVATION _____ DATE _____
FIELD GEOLOGIST _____

DRILLER _____
DRILLING METHOD _____
DEVELOPMENT METHOD _____

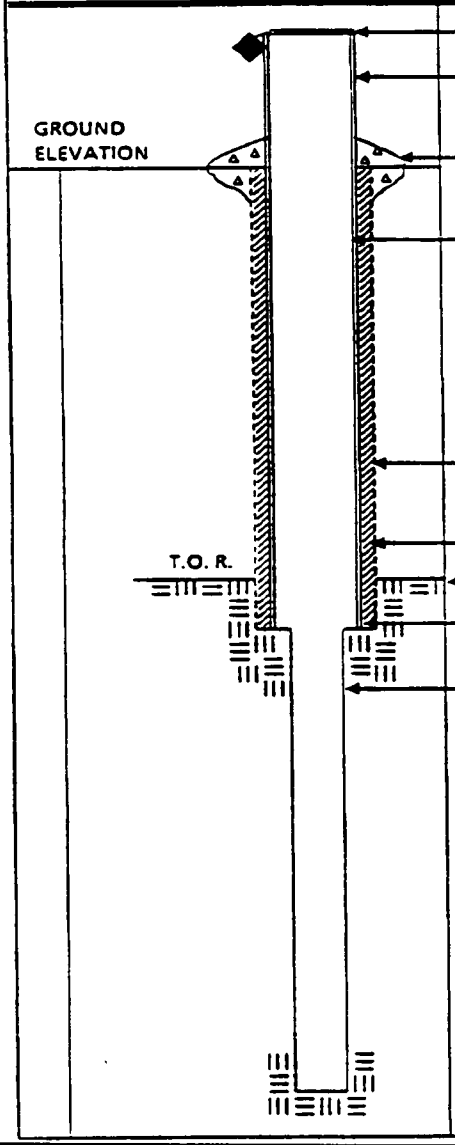

ELEVATION OF TOP OF CASING: _____

STICK UP OF CASING ABOVE GROUND SURFACE: _____

TYPE OF SURFACE SEAL: _____

I.D. OF CASING: _____
TYPE OF CASING: _____

TEMP. / PERM.: _____

DIAMETER OF HOLE: _____

TYPE OF CASING SEAL: _____

DEPTH TO TOP OF ROCK: _____

DEPTH TO BOTTOM CASING: _____

DIAMETER OF HOLE IN BEDROCK: _____

DESCRIBE IF CORE / REAMED WITH BIT:

_____

DESCRIBE JOINTS IN BEDROCK AND DEPTH:

_____

ELEVATION / DEPTH OF HOLE. _____ / _____

ATTACHMENT C-8
EXAMPLE BEDROCK MONITORING WELL SHEET - WELL INSTALLED IN BEDROCK

BORING NO.: _____

BEDROCK
MONITORING WELL SHEET
WELL INSTALLED IN BEDROCK

PROJECT _____ LOCATION _____
PROJECT NO. _____ BORING _____
ELEVATION _____ DATE _____
FIELD GEOLOGIST _____

DRILLER _____
DRILLING METHOD _____
DEVELOPMENT METHOD _____

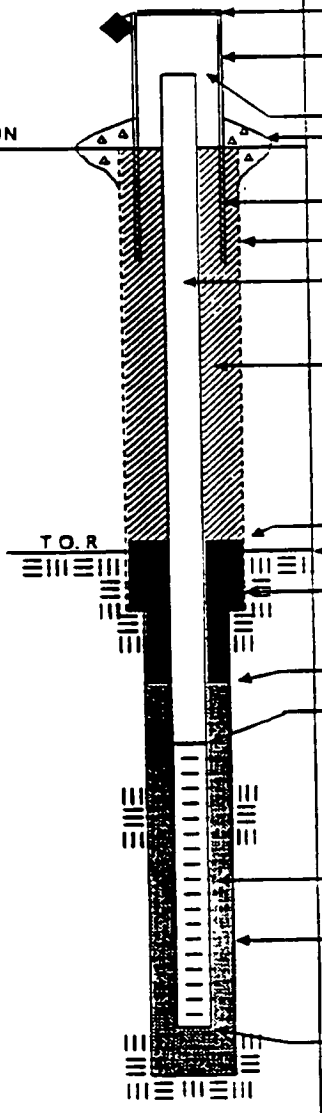

ELEVATION OF TOP OF SURFACE CASING. _____

STICK UP OF CASING ABOVE GROUND SURFACE: _____

ELEVATION TOP OF RISER: _____

TYPE OF SURFACE SEAL: _____

I.D. OF SURFACE CASING. _____

DIAMETER OF HOLE: _____

RISER PIPE I.D.: _____

TYPE OF RISER PIPE: _____

TYPE OF BACKFILL: _____

ELEVATION / DEPTH TOP OF SEAL: _____ / _____

ELEVATION / DEPTH TOP OF BEDROCK: _____ / _____

TYPE OF SEAL. _____

ELEVATION / DEPTH TOP OF SAND: _____ / _____

ELEVATION / DEPTH TOP OF SCREEN: _____ / _____

TYPE OF SCREEN: _____

SLOT SIZE x LENGTH: _____

I.D. SCREEN: _____

TYPE OF SAND PACK: _____

DIAMETER OF HOLE IN BEDROCK.

CORE / REAM: _____

ELEVATION / DEPTH BOTTOM SCREEN: _____ / _____

ELEVATION / DEPTH BOTTOM OF HOLE: _____ / _____

ATTACHMENT C-8A
EXAMPLE BEDROCK MONITORING WELL SHEET
WELL INSTALLED IN BEDROCK (FLUSHMOUNT)

BORING NO.: _____

BEDROCK
MONITORING WELL SHEET
WELL INSTALLED IN BEDROCK

PROJECT: _____ LOCATION: _____ DRILLER: _____
PROJECT NO.: _____ BORING: _____ DRILLING METHOD: _____
ELEVATION: _____ DATE: _____ DEVELOPMENT METHOD: _____
FIELD GEOLOGIST: _____

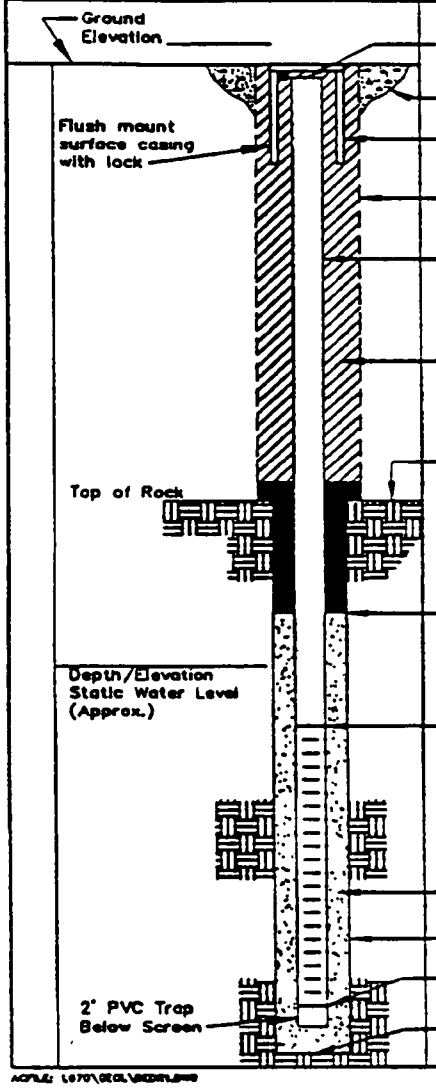

ELEVATION TOP OF RISER: _____
TYPE OF SURFACE SEAL: _____
TYPE OF PROTECTIVE CASING: _____
I.D. OF PROTECTIVE CASING: _____
DIAMETER OF HOLE: _____
TYPE OF RISER PIPE: _____
RISER PIPE I.D.: _____
TYPE OF BACKFILL/SEAL: _____
_____
DEPTH/ELEVATION TOP OF BEDROCK: _____ / _____
DEPTH/ELEVATION TOP OF SAND: _____ / _____
DEPTH/ELEVATION TOP OF SCREEN: _____ / _____
TYPE OF SCREEN: _____
SLOT SIZE x LENGTH: _____
TYPE OF SAND PACK: _____
DIAMETER OF HOLE IN BEDROCK: _____
DEPTH/ELEVATION BOTTOM OF SCREEN: _____ / _____
DEPTH/ELEVATION BOTTOM OF SAND: _____ / _____
DEPTH/ELEVATION BOTTOM OF HOLE: _____ / _____
BACKFILL MATERIAL BELOW SAND: _____

ATTACHMENT C-9
EXAMPLE TEST PIT LOG

TEST PIT LOG

Brown & Root Environmental

PROJECT: _____ TEST PIT NO.:
PROJECT NO _____ DATE. _____
LOCATION: _____
FIELD GEOLOGIST _____

DEPTH (ft.)	LITHOLOGY CHANGE (Depth/ft.)	MATERIAL DESCRIPTION (Soil Density / Consistency, Color)	USCS	REMARKS

Test Pit Cross Section and / or Plan View

REMARKS _____

PHOTO LOG _____ TEST PIT _____

PAGE ____ OF ____

ATTACHMENT D
EXAMPLE EQUIPMENT CALIBRATION LOG

Brown & Root Environmental

EQUIPMENT CALIBRATION LOG

INSTRUMENT NAME / MODEL : _____ JOB NAME : _____

MANUFACTURER : _____ JOB NUMBER . _____

CALIBRATION DATE	INITIAL SETTINGS	STANDARDS USED	PROCEDURE	ADJUSTMENTS MADE	FINAL SETTINGS	SIGNATURE	COMMENTS

ATTACHMENT E
EXAMPLE DAILY ACTIVITIES RECORD

Brown & Root Environmental

DAILY ACTIVITIES RECORD

PROJECT _____ LOCATION _____
CLIENT _____ ARRIVAL TIME _____ JOB NO. _____
DATE _____ DEPARTURE TIME _____
CONTRACTOR _____ DRILLER _____
BORING NO. _____ HNUS REPRESENTATIVE _____

ITEM	QUANTITY ESTIMATE	QUANTITY TODAY	PREVIOUS TOTAL QUANTITY	CUMULATIVE QUANTITY TO DATE

COMMENTS: _____

APPROVED BY:

_____ HNUS FIELD REPRESENTATIVE

_____ DRILLER OR REPRESENTATIVE

ATTACHMENT F
FIELD TRIP SUMMARY REPORT
PAGE 1 OF 2

SUNDAY

Date: _____ Personnel: _____

Weather: _____ Onsite: _____

Site Activities: _____

MONDAY

Date: _____ Personnel: _____

Weather: _____ Onsite: _____

Site Activities: _____

TUESDAY

Date: _____ Personnel: _____

Weather: _____ Onsite: _____

Site Activities: _____

WEDNESDAY

Date: _____ Personnel: _____

Weather: _____ Onsite: _____

Site Activities: _____

ATTACHMENT F
PAGE 2 OF 2
FIELD TRIP SUMMARY REPORT

THURSDAY

Date: _____ Personnel: _____

Weather: _____ Onsite: _____

Site Activities: _____

_____

_____

_____

FRIDAY

Date: _____ Personnel: _____

Weather: _____ Onsite: _____

Site Activities: _____

_____

_____

_____

SATURDAY

Date: _____ Personnel: _____

Weather: _____ Onsite: _____

Site Activities: _____

_____

_____

_____

BROWN & ROOT ENVIRONMENTAL	STANDARD OPERATING PROCEDURES	Number SA-6.1	Page 1 of 23
		Effective Date 03/01/96	Revision 0
		Applicability B&R Environmental, NE	
		Prepared Earth Sciences Department	
Subject NON-RADIOLOGICAL SAMPLE HANDLING		Approved D. Senovich	

TABLE OF CONTENTS

SECTION		PAGE
1.0	PURPOSE	2
2.0	SCOPE	2
3.0	GLOSSARY	2
4.0	RESPONSIBILITIES	3
5.0	PROCEDURES	3
5.1	Sample Containers	3
5.2	Sample Preservation	4
5.2.1	Overview	4
5.2.2	Preparation and Addition of Reagents	4
5.3	Field Filtration	6
5.4	Sample Packaging and Shipping	6
5.4.1	Environmental Samples	6
5.4.2	Determination of Shipping Classification for Hazardous Material Samples	7
5.4.3	Packaging and Shipping of Samples Classified as Flammable (or Solid)	8
5.5	Shipment of Lithium Batteries	10
6.0	REFERENCES	11

ATTACHMENTS

A	GENERAL SAMPLE CONTAINER AND PRESERVATION REQUIREMENTS	12
B	ADDITIONAL REQUIRED CONTAINERS, PRESERVATION TECHNIQUES, AND HOLDING TIMES	13
C	DOT HAZARDOUS MATERIAL CLASSIFICATION (49 CFR 173.2(a))	16
D	GUIDE FOR HAZARDOUS MATERIALS SHIPPERS	18
E	HAZARDOUS MATERIALS SHIPPING CHECK LIST	20
F	DOT SEGREGATION AND SEPARATION CHART	21
G	LITHIUM BATTERY SHIPPING PAPERS	22

1.0 PURPOSE

The purpose of this Standard Operating Procedure (SOP) is to provide information on sample preservation, packaging, and shipping procedures to be used in handling environmental samples submitted for chemical constituent, biological, or geotechnical analysis. Sample chain-of-custody procedures and other aspects of field documentation are addressed in SOP SA-6.3. Sample identification is addressed in SOP CT-04.

2.0 SCOPE

This procedure:

- Describes the appropriate containers to be used for samples depending on the analyses to be performed, and the steps necessary to preserve the samples when shipped off site for chemical analysis.
- Provides instruction for sample packaging and shipping in accordance with current U.S. Department of Transportation (DOT) regulations.

3.0 GLOSSARY

Hazardous Material - A substance or material which has been determined by the Secretary of Transportation to be capable of posing an unreasonable risk to health, safety, and property when transported in commerce, and which has been so designated. Under 49 CFR, the term includes hazardous substances, hazardous wastes, marine pollutants, and elevated temperature materials, as well as materials designated as hazardous under the provisions of §172.101 and §172.102 and materials that meet the defining criteria for hazard classes and divisions in Part 173.

Hazardous Waste - Any substance listed in 40 CFR, Subpart D (y261.30 et seq.), or otherwise characterized as ignitable, corrosive, reactive, or toxic (as defined by Toxicity Characteristic Leaching Procedure, TCLP, analysis) as specified under 40 CFR, Subpart C (y261.20 et seq.), that would be subject to manifest requirements specified in 40 CFR 262. Such substances are defined and regulated by EPA.

Marking - A descriptive name, identification number, instructions, cautions, weight, specification or UN marks, or combination thereof required on outer packaging of hazardous materials.

n.o.i - Not otherwise indicated (may be used interchangeably with n.o.s.).

n.o s. - Not otherwise specified.

ORM - Other regulated material (see DOT 49 CFR 173.144).

Packaging - A receptacle and any other components or materials necessary for compliance with the minimum packaging requirements of 49 CFR 174, including containers (other than freight containers or overpacks), portable tanks, cargo tanks, tank cars, and multi-unit tank-car tanks to perform a containment function in conformance with the minimum packaging requirements of 49 CFR 173.24(a) & (b).

Placard - Color-coded, pictorial sign which depicts the hazard class symbol and name and which is placed on the side of a vehicle transporting certain hazardous materials.

Common Preservatives:

- Hydrochloric Acid - HCl
- Sulfuric Acid - H_2SO_4
- Nitric Acid - HNO_3
- Sodium Hydroxide - NaOH

Other Preservatives

- Zinc Acetate
- Sodium Thiosulfate - $Na_2S_2O_3$

Normality (N) - Concentration of a solution expressed as equivalent per liter, an equivalent being the amount of a substance containing 1 gram-atom of replaceable hydrogen or its equivalent. Thus, a one-molar solution of HCl, containing 1 gram-atom of H, is "one normal," whereas a one-molar solution of H_2SO_4, containing 2 gram-atoms of H, is "two normal."

Reportable Quantity (RQ) - For the purposes of this SOP, means the quantity specified in column 3 of the Appendix to DOT 49 CFR §172.101 for any material identified in column 1 of the appendix. A spill greater than the amount specified must be reported to the National Response Center.

Sample - A sample is physical evidence collected from a facility or the environment, which is representative of conditions at the location and time of collection.

4.0 RESPONSIBILITIES

Field Operations Leader - Directly responsible for the bottling, preservation, labeling, packaging, shipping, and custody of samples up to and including release to the shipper.

Field Samplers - Responsible for initiating the Chain-of-Custody Record (per SOP SA-6.3), implementing the packaging and shipping requirements, and maintaining custody of samples until they are relinquished to another custodian or to the common carrier.

5.0 PROCEDURES

Sample identification, labeling, documentation, and chain-of-custody are addressed by SOP SA-6.3.

5.1 Sample Containers

Different types of chemicals react differently with sample containers made of various materials. For example, trace metals adsorb more strongly to glass than to plastic, whereas many organic chemicals may dissolve various types of plastic containers. Attachments A and B show proper containers (as well as other information) per 40 CFR 136. In general, the sample container shall allow approximately 5-10 percent air space ("ullage") to allow for expansion/vaporization if the sample warms during transport. However, for collection of volatile organic compounds, head space shall be omitted. The analytical laboratory will generally provide certified-clean containers for samples to be analyzed for chemical constituents. Shelby tubes or other sample containers are generally provided by the driller for samples requiring geotechnical analysis. Sufficient lead time shall be allowed for a delivery of bottle orders. Therefore, it is critical to use the correct container to maintain the integrity of the sample prior to analysis.

Once opened, the container must be used at once for storage of a particular sample. Unused but opened containers are to be considered contaminated and must be discarded; because of the potential for introduction of contamination, they cannot be reclosed and saved for later use. Likewise, any unused containers which appear contaminated upon receipt, or which are found to have loose caps or a missing Teflon liner (if required for the container), shall be discarded.

5.2 Sample Preservation

Many water and soil samples are unstable and therefore require preservation to prevent changes in either the concentration or the physical condition of the constituent(s) requiring analysis. Although complete and irreversible preservation of samples is not possible, preservation does retard the chemical and biological changes that inevitably take place after the sample is collected. Preservation techniques are usually limited to pH control, chemical addition(s), and refrigeration/ freezing (certain biological samples only).

5.2.1 Overview

The preservation techniques to be used for various analytes are listed in Attachments A and B. Reagents required for sample preservation will either be added to the sample containers by the laboratory prior to their shipment to the field or be added in the field (in a clean environment). Only high purity reagents shall be used for preservation. In general, aqueous samples of low-concentration organics (or soil samples of low- or medium-concentration organics) are cooled to 4°C. Medium-concentration aqueous samples and high-hazard organics samples are typically not preserved. Low-concentration aqueous samples for metals are acidified with HNO_3, whereas medium-concentration and high-hazard aqueous metal samples are not preserved. Low- or medium-concentration soil samples for metals are cooled to 4°C, whereas high-hazard samples are not preserved.

The following subsections describe the procedures for preparing and adding chemical preservatives. Attachments A and B indicate the specific analytes which require these preservatives.

5.2.2 Preparation and Addition of Reagents

Addition of the following acids or bases may be specified for sample preservation; these reagents shall be analytical reagent (AR) grade or purer and shall be diluted to the required concentration with deionized water before field sampling commences. To avoid uncontrolled reactions, be sure to Add Acid to water (not vice versa). A dilutions guide is provided below.

Acid/Base	Dilution	Concentration	Estimated Amount Required for Preservation
Hydrochloric Acid (HCl)	1 part concentrated HCl: 1 part double-distilled, deionized water	6N	5-10 mL
Sulfuric Acid (H_2SO_4)	1 part concentrated H_2SO_4: 1 part double-distilled, deionized water	18N	2 - 5 mL
Nitric Acid (HNO_3)	Undiluted concentrated HNO_3	16N	2 - 5 mL
Sodium Hydroxide (NaOH)	400 grams solid NaOH dissolved in 870 mL double-distilled, deionized water; yields 1 liter of solution	10N	2 mL

The amounts required for preservation shown in the above table assumes proper preparation of the preservative and addition of the preservative to one liter of aqueous sample (assuming that the sample is initially at pH 7, is poorly buffered, and does not contain particulate matter; as these conditions vary, more preservative may be required). Consequently, the final sample pH must be checked using narrow-range pH paper, as described in the generalized procedure detailed below:

- Pour off 5-10 mL of sample into a dedicated, clean container. Use some of this sample to check the initial sample pH using wide range (0-14) pH paper. Never dip the pH paper into the sample; always apply a drop of sample to the pH paper using a clean stirring rod or pipette.

- Add about one-half of the estimated preservative required to the original sample bottle. Cap and invert gently several times to mix. Check pH (as described above) using medium range pH paper (pH 0-6 or pH 7.5-14, as applicable).

- Cap sample bottle and seal securely.

Additional considerations are discussed below:

- To test if ascorbic acid must be used to remove oxidizing agents present in the sample before it can be properly preserved, place a drop of sample on KI-starch paper. A blue color indicates the need for ascorbic acid addition.

  If required, add a few crystals of ascorbic acid to the sample and retest with the KI-starch paper. Repeat until a drop of sample produces no color on the KI-starch paper. Then add an additional 0.6 grams of ascorbic acid per each liter of sample volume.

  Continue with proper base preservation of the sample as described, generally, above.

- Samples for sulfide analysis must be treated by the addition of 4 drops (0.2 mL) of 2N zinc acetate solution per 100 ml of sample.

  The 2N zinc acetate solution is made by dissolving 220 grams of zinc acetate in 870 mL of double-distilled, deionized water to make 1 liter of solution.

  The sample pH is then raised to 9 using the NaOH preservative.

- To test of sodium thiosulfate must be added to remove residual chlorine from a sample, test the sample for residual chlorine using a field test kit especially made for this purpose.

  If residual chlorine is present, add 0 08 grams of sodium thiosulfate per liter of sample to remove the residual chlorine.

  Continue with proper acidification of the sample as described, generally, above.

For biological samples, 10% buffered formalin or isopropanol may also be required for preservation. Questions regarding preservation requirements should be resolved through communication with the laboratory <u>before</u> sampling begins.

5.3 Field Filtration

At times, field-filtration may be required to provide for the analysis of dissolved chemical constituents. Field-filtration must be performed prior to the preservation of samples as described above. General procedures for field filtration are described below:

- The sample shall be filtered through a non-metallic, 0.45-micron membrane filter, immediately after collection. The filtration system shall consist of dedicated filter canister, dedicated silicon tubing, and a peristaltic pump with pressure or vacuum pumping squeeze action (since the sample is filtered by mechanical peristalsis, the sample travels only through the tubing).

- To perform filtration, thread the silicon tubing through the peristaltic pump head. Attach the filter canister to the discharge end of the silicon tubing (note flow direction arrow); attach the aqueous sample container to the intake end of the silicon tubing. Turn the peristaltic pump on and perform filtration.

- Continue by preserving the filtrate (contained in the filter canister), as applicable and generally described above.

5.4 Sample Packaging and Shipping

Samples collected for shipment from a site shall be classified as either environmental or hazardous material samples. Samples from drums containing materials other than Investigative Derived Waste (IDW) and samples obtained from waste piles or bulk storage tanks are generally shipped as hazardous materials. A distinction must be made between the two types of samples in order to:

- Determine appropriate procedures for transportation of samples (if there is any doubt, a sample shall be considered hazardous and shipped accordingly.)

- Protect the health and safety of transport and laboratory personnel receiving the samples (special precautions are used by the shipper and at laboratories when hazardous materials are received.)

Detailed procedures for packaging environmental and hazardous material samples are outlined in the remainder of this section.

5.4.1 Environmental Samples

Environmental samples are packaged as follows:

- Place sample container, properly identified and with lid securely fastened in a plastic bag (e.g. Ziploc baggie), and seal the bag.

- Place sample in a cooler constructed of sturdy material which has been lined with a large, plastic (e.g. "garbage" bag).

- Pack with enough noncombustible, absorbent, cushioning materials such as vermiculite (shoulders of bottles must be iced if required) to minimize the possibility of the container breaking.

- If cooling is required (see Attachments A and B), double-bag ice in Ziploc baggies and place around container shoulders, and on top of absorbent packing material (minimum of 8 pounds of ice for a medium-size cooler).

- Seal (i.e., tape or tie top in knot) large liner bag.

- The original (top, signed copy) and extra carbonless copies of the COC form shall be placed inside a large Ziploc-type bag and taped inside the lid of the shipping cooler. If multiple coolers are sent but are included on one COC form, the COC form should be sent with the first cooler. The COC form should then state how many coolers are included with that shipment.

- Close and seal outside of cooler as described in SOP SA-6.3. Signed custody seals must be used.

Coolers must be marked as containing "Environmental Samples." The appropriate side of the container must be marked "This End Up" and arrows placed appropriately. No DOT marking or labeling is required; there are no DOT restrictions on mode of transportation.

5.4.2 Determination of Shipping Classification for Hazardous Material Samples

Samples not determined to be environmental samples, or samples known or expected to contain hazardous materials, must be considered hazardous material samples and transported according to the requirements listed below.

5.4.2.1 Known Substances

If the substance in the sample is known or can be identified, package, mark, label, and ship according to the specific instructions for that material (if it is listed) in the DOT Hazardous Materials Table, 49 CFR 172.101. (DOT Guide for shippers can be found in Attachment D of this document.)

To determine the proper shipping name, use the following steps to help locate the shipping name on the Hazardous Materials Table, DOT 49 CFR 172.101

1. Look first for the chemical or technical name of the material, for example, ethyl alcohol. Note that many chemicals have more than one technical name, for example, perchloroethylene (not listed in 172.101) is listed as tetrachloroethylene (listed 172.101). It may be useful to consult a chemist for all possible technical names a material can have. If your material is not listed by its technical name, then . . .

2. Look for the chemical family name For example, pentyl alcohol is not listed but the chemical family name is: alcohol, n.o.s. (not otherwise specified). If the chemical family name is not listed, then

3. Look for a generic name based on end use. For example, Paint, n.o.s or Fireworks, n.o.s. If a generic name based on end use is not listed, then . . .

4 Look for a generic family name based on end use, for example, drugs, n.o.s. or cosmetics, n.o.s. Finally, if your material is not listed by a generic family name but you suspect or know the material is hazardous because it meets the definition of one or more hazardous classes, then .

5. You will have to use the general hazard class for a proper shipping name. For example, Flammable Liquid, n.o.s. or Oxidizer, n.o.s.

5.4.2.2 Unknown Substances

For samples of hazardous substances of unknown content, select the appropriate transportation category according to the DOT hazardous materials classification of a material having more than one hazard. This procedure is outlined in DOT Regulation 49 CFR 173.2a. (This can be found in Attachment C of this SOP.)

The correct shipping classification for an unknown sample is selected through a process of elimination, as outlined in DOT Regulation 49 CFR 172.101(c)(11). By using the provisions in this paragraph, the proper shipping name and description will be determined. A step-by-step guide is provided by the Department of Transportation (DOT) and can be found in Attachment D of this SOP.

5.4.3 Packaging and Shipping of Samples Classified as Flammable Liquid (or Solid)

5.4.3.1 Packaging

Applying the word "flammable" to a sample does not imply that it is in fact flammable. The word prescribes the class of packaging according to DOT regulations.

1. Containerize sample as required (see Attachments A and B). To prevent leakage, fill container no more than 90 percent full. Seal lid with teflon tape or wire.

2. Complete sample label and attach securely to sample container.

3. Seal container and place in 2-mil-thick (or thicker) polyethylene bag (e.g., Ziploc baggie), one sample per bag. Position sample identification label so that it can be read through bag. Seal bag.

4. For soil jars, place sealed bag inside metal can (available from laboratory or laboratory supplier) and cushion it with enough noncombustible, absorbent material (for example, vermiculite or diatomaceous earth) between the bottom and sides of the can and bag to prevent breakage and absorb leakage. Pack one bag per can. Use clips, tape, or other positive means to hold can lid securely, tightly and permanently. Mark can as indicated in Paragraph 1 of Section 5.3.4.2, below. Single 1-gallon bottles do not need to be placed in metal cans.

5. Place one or more metal cans (or a single 1-gallon bottle) into a strong outside container, such as a metal picnic cooler or a DOT-approved fiberboard box. Surround cans (or bottle) with noncombustible, absorbent cushioning materials for stability during transport. The absorbent material should be able to absorb the entire contents of the container. Mark container as indicated in Paragraph 2 below.

5.4.3.2 Marking/Labeling

1. Use abbreviations only where specified. Place the following information, either hand-printed or in label form, on the metal can (or 1-gallon bottle):

   Laboratory name and address.

- Proper shipping name from the hazardous materials table (DOT Regulation CFR 49 172.101). Example: "Flammable Liquid, n.o.s. UN1993" or "Flammable Solid, n.o.s. UN1325." This will include packing group (see Section 5.3.4.2, No. 2.)

Not otherwise specified (n.o.s) is not used if the flammable liquid (or solid) is identified. If identified, the name of the specific material is listed before the category (for example, Acetone, Flammable Liquid), followed by its appropriate UN number found in the DOT Hazardous Materials table (49 CFR 172.101).

2. Determine packing group. The packing group is part of the proper shipping name and must be included on the shipping papers in the description section.

   I. Most Hazardous
   II. Medium Hazard
   III. Least Hazardous

   The packing group will be listed in the hazardous materials table, column 5.

3. Place all information on outside shipping container as on can (or bottle), specifically:

   - Proper shipping name
   - UN or NA number
   - Proper label(s)
   - Addressee and sender

   Place the following labels on the outside shipping container: "Cargo Aircraft Only" and DOT label such as: "Flammable Liquid" (or "Flammable Solid"). "Dangerous When Wet" label shall be used if the Flammable Solid has not been exposed to a wet environment. "Laboratory Samples" and "THIS SIDE UP" or "THIS END UP" shall also be marked on the top of the outside container, and upward-pointing arrows shall be placed on all four sides of the container.

5.4.3.3 <u>Shipping Papers</u>

1. Use abbreviations only where specified. Complete the carrier-provided bill of lading and sign certification statement. Provide the following information in the order listed (one form may be used for more than one exterior container):

   - Proper shipping name. (Example: "Flammable Liquid, n.o.s. UN1993" or "Flammable Solid, n.o.s. UN1325 Packing Group I, II, III").
   - "Limited Quantity" (or "Ltd. Qty."). (See No. 3, below.)
   - "Cargo Aircraft Only."
   - Net weight (wt) or net volume (vol), just before or just after "Flammable Liquid, n.o.s." or "Flammable Solid, n.o.s.," by item, if more than one metal can is inside an exterior container.

     "Laboratory Samples" (if applicable).

2. Include Chain-of-Custody Record, properly executed in outside container; use custody seals.

3. "Limited Quantity" means the maximum amount of a hazardous material for which there is a specific labeling or packaging exception (DOT CFR 49 171.8). This may mean that packages are exempted from labeling requirements. To determine if your sample meets the Limited Quantity Exception, refer to DOT Regulation CFR 49 Subpart C 173.50 through 173.156. First, determine the proper classification and shipping name for the material; then refer to the exception requirements for that particular class of material beginning with 173.50.

   Example: "Flammable Liquid n.o.s. UN1993 Packing Group 1." The outer package can weigh no more than 66 pounds gross weight. The inner package or container can weigh no more than 0.1 gallon net capacity for each container.

   To determine whether the material can be shipped as a "Limited Quantity," you must check the specific requirement for that class of material.

5.4.3.4 Transportation

1. The majority of unknown hazardous substance samples will be classified as flammable liquids. The samples will be transported by rented or common carrier truck, railroad, or express overnight package services. Do not transport samples on any passenger-carrying air transport system, even if the system has cargo-only aircraft. DOT regulations permit regular airline cargo-only aircraft, but difficulties with most suggest avoiding them. Instead, ship by airline carriers that carry only cargo. If unsure of what mode of transportation to use, consult the FOL or Project Manager.[1]

2. For transport by government-owned vehicle, including aircraft, DOT regulations do not apply. However, procedures described above, with the exception of execution of the bill of lading with certification, shall still be followed.

3. Use the hazardous materials shipping check list (Attachment E) as a guidance to ensure that all sample-handling requirements are satisfied.

4. In some cases, various materials may react if they break during shipment. To determine if you are shipping such materials, refer to the DOT compatibility chart in Attachment F.

5.5 Shipment of Lithium Batteries

Monitoring well data are analyzed using either the Hermit SE 1000 or the Hermit SE 2000 environmental data logger. These instruments are powered by lithium batteries. The Department of Transportation has determined that lithium batteries are a hazardous material and are to be shipped using the following information:

---

[1] Note: If you are unsure as how to ship the sample (hazardous or environmental sample), contact the FOL or Project Manager so that a decision can be made as to the proper shipping practices. The DOT penalties for improper shipment of a hazardous material are stringent and may include a prison term for intentional violations.

- Product Designation
  - Hermit SE 1000
  - Hermit SE 2000

- DOT Proper Shipping Name
  - Lithium batteries, contained in equipment, UN3091

- Classification or Division
  - Class 9

Shipment of equipment containing lithium batteries must be accompanied by shipping papers completed as indicated in Attachment G. The instrument will be shipped by Federal Express as a Hazardous Material. Place the instrument in the same container in which it was received. This container or case is a DOT-approved shipping container. For Federal Express procedures to ship hazardous materials, call 1-800-238-5355, extension 922-1666. In most cases, the return shipping papers and DOT labels will be shipped to you from the company warehouse or the vendor. An example of the types of labels used for shipment and the wording are shown in Attachment G. These labels will be attached to the outside container with the following wording:

- Lithium Batteries Contained in Equipment
  - UN-3091
  - Shipped Under CA-9206009

6.0 REFERENCES

American Public Health Association, 1981. Standard Methods for the Examination of Water and Wastewater, 15th Edition. APHA, Washington, D.C.

U.S. Department of Transportation, 1993. Hazardous Materials Regulations, 49 CFR 171-177.

U.S. EPA, 1984. "Guidelines Establishing Test Procedures for the Analysis of Pollutants under Clean Water Act." Federal Register, Volume 49 (209), October 26, 1984, p. 43234.

U.S. EPA, 1979. Methods for Chemical Analysis of Water and Wastes. EPA-600/4-79-020, U.S. EPA-EMSL, Cincinnati, Ohio.

ATTACHMENT A

GENERAL SAMPLE CONTAINER AND PRESERVATION REQUIREMENTS

Sample Type and Concentration			Container[1]	Sample Size	Preservation[2]	Holding Time[2]
WATER						
Organics (GC&GC/MS)	VOC	Low	Borosilicate glass	2 x 40 mL	Cool to 4°C HCl to ≤ 2	14 days[9]
	Extractables (Low SVOCs and pesticide/PCBs)		Amber glass	2x2 L or 4x1 L	Cool to 4°C	7 days to extraction; 40 days after extraction
	Extractables (Medium SVOCs and pesticide/PCBs)		Amber glass	2x2 L or 4x1 L	None	7 days to extraction; 40 days after extraction
Inorganics	Metals	Low	High-density polyethylene	1 L	HNO_3 to pH ≤2	6 months (Hg-28 days)
		Medium	Wide-mouth glass	16 oz.	None	6 months
	Cyanide	Low	High-density polyethylene	1 L	NaOH to pH>12	14 days
	Cyanide	Medium	Wide-mouth glass	16 oz.	None	14 days
Organic/ Inorganic	High Hazard		Wide-mouth glass	8 oz.	None	14 days
SOIL						
Organics (GC&GC/MS)	VOC		Wide-mouth glass with teflon liner	2 x 4 oz.	Cool to 4°C	14 days
	Extractables (Low SVOCs and pesticides/PCBs)		Wide-mouth glass	8 oz.	Cool to 4°C	14 days to extraction; 40 days after extraction
	Extractables (Medium SVOCs and pesticides/PCBs)		Wide-mouth glass	8 oz	Cool to 4°C	14 days to extraction; 40 days after extraction
Inorganics	Low/Medium		Wide-mouth glass	8 oz.	Cool to 4°C	6 months (Hg - 28 days) Cyanide (14 days)
Organic/ Inorganic	High Hazard		Wide-mouth glass	8 oz	None	NA
Dioxin/Furan	All		Wide-mouth glass	4 oz.	None	7 days until extraction; 40 days after extraction
TCLP	All		Wide-mouth glass	8 oz.	None	7 days until preparation; analysis as per fraction
AIR						
Volatile Organics	Low/Medium		Charcoal tube – 7 cm long, 6 mm OD, 4 mm ID	100 L air	Cool to 4°C	5 days recommended

(1) All glass containers should have Teflon cap liners or septa.
(2) See Attachment E. Preservation and maximum holding time allowances per 40 CFR 136.

ATTACHMENT B

ADDITIONAL REQUIRED CONTAINERS, PRESERVATION TECHNIQUES, AND HOLDING TIMES

Parameter Number/Name	Container(1)	Preservation(2)(3)	Maximum Holding Time(4)
INORGANIC TESTS:			
Acidity	P, G	Cool, 4°C	14 days
Alkalinity	P, G	Cool, 4°C	14 days
Ammonia - Nitrogen	P, G	Cool, 4°C; H_2SO_4 to pH 2	28 days
Biochemical Oxygen Demand (BOD)	P, G	Cool, 4°C	48 hours
Bromide	P, G	None required	28 days
Chemical Oxygen Demand (COD)	P, G	Cool, 4°C; H_2SO_4 to pH 2	28 days
Chloride	P, G	None required	28 days
Chlorine, Total Residual	P, G	None required	Analyze immediately
Color	P, G	Cool, 4°C	48 hours
Cyanide, Total and Amenable to Chlorination	P, G	Cool, 4°C; NaOH to pH 12; 0.6 g ascorbic acid(5)	14 days(6)
Fluoride	P	None required	28 days
Hardness	P, G	HNO_3 to pH 2; H_2SO_4 to pH 2	6 months
Total Kjeldahl and Organic Nitrogen	P, G	Cool, 4°C; H_2SO_4 to pH 2	28 days
Nitrate - Nitrogen	P, G	None required	48 hours
Nitrate-Nitrite - Nitrogen	P, G	Cool, 4°C; H_2SO_4 to pH 2	28 days
Nitrite - Nitrogen	P, G	Cool, 4°C	48 hours
Oil & Grease	G	Cool, 4°C; H_2SO_4 to pH 2	28 days
Total Organic Carbon (TOC)	P, G	Cool, 4°C; HCl or H_2SO_4 to pH 2	28 days
Orthophosphate	P, G	Filter immediately; Cool, 4°C	48 hours
Oxygen, Dissolved-Probe	G Bottle & top	None required	Analyze immediately
Oxygen, Dissolved-Winkler	G Bottle & top	Fix on site and store in dark	8 hours
Phenols	G	Cool, 4°C; H_2SO_4 to pH 2	28 days
Phosphorus, Total	P, G	Cool, 4°C, H_2SO_4 to pH 2	28 days
Residue, Total	P, G	Cool, 4°C	7 days
Residue, Filterable (TDS)	P, G	Cool, 4°C	7 days
Residue, Nonfilterable (TSS)	P, G	Cool, 4°C	7 days
Residue, Settleable	P, G	Cool, 4°C	48 hours
Residue, Volatile (Ash Content)	P, G	Cool, 4°C	7 days
Silica	P	Cool, 4°C	28 days
Specific Conductance	P, G	Cool, 4°C	28 days
Sulfate	P, G	Cool, 4°C	28 days

ATTACHMENT B
ADDITIONAL REQUIRED CONTAINERS, PRESERVATION TECHNIQUES, AND HOLDING TIMES
PAGE TWO

Parameter Number/Name	Container[1]	Preservation[2][3]	Maximum Holding Time[4]
INORGANIC TESTS (Cont'd):			
Sulfide	P, G	Cool, 4°C; add zinc acetate plus sodium hydroxide to pH 9	7 days
Sulfite	P, G	None required	Analyze immediately
Turbidity	P, G	Cool, 4°C	48 hours
METALS:[7]			
Chromium VI (Hexachrome)	P, G	Cool, 4°C	24 hours
Mercury (Hg)	P, G	HNO_3 to pH 2	28 days
Metals, except Chromium VI and Mercury	P, G	HNO_3 to pH 2	6 months
ORGANIC TESTS:[8]			
Purgeable Halocarbons	G, Teflon-lined septum	Cool, 4°C; 0.008% $Na_2S_2O_3$[5]	14 days
Purgeable Aromatic Hydrocarbons	G, Teflon-lined septum	Cool, 4°C; 0.008% $Na_2S_2O_3$[5] HCl to pH 2[9]	14 days
Acrolein and Acrylonitrile	G, Teflon-lined septum	Cool, 4°C; 0.008% $Na_2S_2O_3$[5] adjust pH to 4-5[10]	14 days
Phenols[11]	G, Teflon-lined cap	Cool, 4°C; 0.008% $Na_2S_2O_3$[5]	7 days until extraction; 40 days after extraction
Benzidines[11], [12]	G, Teflon-lined cap	Cool, 4°C; 0.008% $Na_2S_2O_3$[5]	7 days until extraction[13]
Phthalate esters[11]	G, Teflon-lined cap	Cool, 4°C	7 days until extraction; 40 days after extraction
Nitrosamines[11], [14]	G, Teflon-lined cap	Cool, 4°C; store in dark; 0.008% $Na_2S_2O_3$[5]	7 days until extraction; 40 days after extraction
PCBs[11]	G, Teflon-lined cap	Cool, 4°C	7 days until extraction; 40 days after extraction
Nitroaromatics & Isophorone[11]	G, Teflon-lined cap	Cool, 4°C; 0.008% $Na_2S_2O_3$[5]; store in dark	7 days until extraction; 40 days after extraction
Polynuclear Aromatic Hydrocarbons (PAHs)[11],[14]	G, Teflon-lined cap	Cool, 4°C; 0.008% $Na_2S_2O_3$[5]; store in dark	7 days until extraction; 40 days after extraction
Haloethers[11]	G, Teflon-lined cap	Cool, 4°C; 0.008% $Na_2S_2O_3$[5]	7 days until extraction; 40 days after extraction
Dioxin/Furan (TCDD/TCDF)[11]	G, Teflon-lined cap	Cool, 4°C; 0.008% $Na_2S_2O_3$[5]	7 days until extraction; 40 days after extraction

ATTACHMENT B
ADDITIONAL REQUIRED CONTAINERS, PRESERVATION TECHNIQUES, AND HOLDING TIMES
PAGE THREE

Parameter Number/Name	Container(1)	Preservation(2)(3)	Maximum Holding Time(4)
RADIOLOGICAL TESTS:			
1-5 Alpha, beta and radium	P, G	HNO_3 to pH 2	6 months

(1) Polyethylene (P): generally 500 ml or Glass (G): generally 1L.
(2) Sample preservation should be performed immediately upon sample collection. For composite chemical samples each aliquot should be preserved at the time of collection. When use of an automated sampler makes it impossible to preserve each aliquot, then chemical samples may be preserved by maintaining at 4°C until compositing and sample splitting is completed.
(3) When any sample is to be shipped by common carrier or sent through the United States Mail, it must comply with the Department of Transportation Hazardous Materials Regulations (49 CFR Part 172).
(4) Samples should be analyzed as soon as possible after collection. The times listed are the maximum times that samples may be held before analysis and still be considered valid. Samples may be held for longer periods only if the permittee, or monitoring laboratory, has data on file to show that the specific types of samples under study are stable for the longer periods, and has received a variance from the Regional Administrator.
(5) Should only be used in the presence of residual chlorine.
(6) Maximum holding time is 24 hours when sulfide is present. Optionally, all samples may be tested with lead acetate paper before pH adjustments are made to determine if sulfide is present. If sulfide is present, it can be removed by the addition of cadmium nitrate powder until a negative spot test is obtained. The sample is filtered and then NaOH is added to pH 12.
(7) Samples should be filtered immediately on site before adding preservative for dissolved metals.
(8) Guidance applies to samples to be analyzed by GC, LC, or GC/MS for specific compounds.
(9) Sample receiving no pH adjustment must be analyzed within 7 days of sampling.
(10) The pH adjustment is not required if acrolein will not be measured. Samples for acrolein receiving no pH adjustment must be analyzed within 3 days of sampling.
(11) When the extractable analytes of concern fall within a single chemical category, the specified preservative and maximum holding times should be observed for optimum safeguard of sample integrity. When the analytes of concern fall within two or more chemical categories, the sample may be preserved by cooling to 4°C, reducing residual chlorine with 0.008% sodium thiosulfate, storing in the dark, and adjusting the pH to 6-9; samples preserved in this manner may be held for 7 days before extraction and for 40 days after extraction. Exceptions to this optional preservation and holding time procedure are noted in footnote 5 (re: the requirement for thiosulfate reduction of residual chlorine) and footnotes 12, 13 (re: the analysis of benzidine).
(12) If 1,2-diphenylhydrazine is likely to be present, adjust the pH of the sample to 4.0±0.2 to prevent rearrangement to benzidine.
(13) Extracts may be stored up to 7 days before analysis if storage is conducted under an inert (oxidant-free) atmosphere.
(14) For the analysis of diphenylnitrosamine, add 0.008% $Na_2S_2O_3$ and adjust pH to 7-10 with NaOH within 24 hours of sampling.
(15) The pH adjustment may be performed upon receipt at the laboratory and may be omitted if the samples are extracted within 72 hours of collection. For the analysis of aldrin, add 0.008% $Na_2S_2O_3$.

ATTACHMENT C

DOT HAZARDOUS MATERIAL CLASSIFICATION
(49 CFR 173.2a)

1. Radioactive material (except a limited quantity)
2. Division 2.3, Poisonous Gases
3. Division 2.1, Flammable Gas
4. Division 2.2, Nonflammable gas
5. Division 6.1, Poisonous Liquids, Packing Group 1 (poison by inhalation only)
6. Division 4.2, Pyrophoric Material
7. Division 4.1, Self-Reactive Material
8. Class 3, Flammable Liquids*
9. Class 8, Corrosive Material
10. Division 4.1, Flammable Solid*
11. Division 4.2, Spontaneously Combustible Materials*
12. Division 4.3, Dangerous When Wet Materials*
13. Division 5.1, Oxidizers*
14. Division 6.1, Poisonous Liquids or Solids (other than Packing Group 1)*
15. Combustible liquid
16. Class 9, Miscellaneous Hazardous Materials

* If a material has or meets the criteria for more than one hazard class, use the precedence of hazardous table on the following page for Classes 3 and 8 and Divisions 4.1, 4.2, 4.3, 5.1, and 6.1. The following table ranks those materials that meet the definition of Classes 3 and 8 and Divisions 4.1, 4.2, 4.3, 5.1, and 6.1.

ATTACHMENT C (Continued)

PRECEDENCE OF HAZARD TABLE

(Hazard Class and Packing Group)

Class	Packing Group	4 2	4 3	5.1 I[a]	5 1 II[a]	5.1 III[a]	6.1 I (Dermal)	6 1 I (Oral)	6.1 II	6.1 III	8 I (Liquid)	8 I (Solid)	8 II (Liquid)	8 II (Solid)	8 III (Liquid)	8 III (Solid)
3	I						3	3	3	3	3	[c]	3	[c]	3	[c]
3	II						3	3	3	3	8	[c]	3	[c]	3	[c]
3	III						6.1	6.1	6.1	3[d]	8	[c]	8	[c]	3	[c]
4 1	II[b]	4.2	4 3	5.1	4.1	4.1	6.1	6.1	4.1	4.1	[c]	8	[c]	4 1	[c]	4.1
4 1	III[b]	4.2	4 3	5.1	4.1	4.1	6 1	6.1	6.1	4 1	[c]	8	[c]	8	[c]	4.1
4 2	II		4 3	5.1	4.2	4 2	6.1	6.1	4.2	4.2	[c]	8	[c]	4.2	[c]	4.2
4 2	III		4 3	5.1	4.2	4 2	6 1	6.1	6.1	4.2	[c]	8	[c]	8	[c]	4 2
4 3	I			5 1	4.3	4 3	6.1	4 3	4.3	4.3	4 3	4 3	4 3	4.3	4 3	4 3
4 3	II			5.1	4.3	4 3	6.1	4.3	4.3	4 3	8	8	8	4 3	4.3	4 3
4 3	III			5.1	4.3	4 3	6.1	6.1	6.1	4 3	8	8	8	8	4.3	4.3
5.1	I[a]						5.1	5.1	5.1	5.1	5 1	5.1	5.1	5.1	5.1	5.1
5 1	II[a]						6.1	5 1	5.1	5.1	8	8	8	5.1	5.1	5.1
5 1	III[a]						6 1	6.1	6.1	5.1	8	8	8	8	5.1	5 1
6 1	I, Dermal										8	6 1	6.1	6.1	6 1	6 1
6 1	I, Oral										8	6.1	6.1	6.1	6.1	6 1
6 1	II, Inhalation										8	6.1	6.1	6 1	6 1	6 1
6.1	II, Dermal										8	6.1	8	6 1	6.1	6.1
6 1	II, Oral										8	8	8	6.1	6.1	6.1
6 1	III										8	8	8	8	8	8

[a] There are at present no established criteria for determining Packing Groups for liquids in Division 5.1. At present, the degree of hazard is to be assessed by analogy with listed substances, allocating the substances to Packing Group I, Great; Group II, Medium, or Group III, Minor Danger.
[b] Substances of Division 4.1 other than self-reactive substances.
[c] Denotes an impossible combination.
[d] For pesticides only, where a material has the hazards of Class 3, Packing Group III, and Division 6.1, Packing Group III, the primary hazard is Division 6 1, Packing Group III.

ATTACHMENT D

GUIDE FOR HAZARDOUS MATERIALS SHIPPERS

USE OF GUIDE - This guide is presented as an aid to shippers of hazardous materials. It does not contain or refer to all of the DOT requirements for shipping hazardous materials. For specific details, refer to all of the DOT requirements for shipping hazardous materials, as provided in the Code of Federal Regulations (CFR), Title 49, Transportation, Parts 100-199.

The following is offered as a step-by-step procedure to aid in compliance with the applicable DOT regulations.

STEP 1 - DETERMINE THE PROPER SHIPPING NAME. The shipper must determine the proper shipping name of the materials as listed in the Hazardous Materials Table, 49 CFR 172.101, Column (2).

STEP 2 - DETERMINE THE HAZARD CLASS OR CLASSES.

a. Refer to the Table, 49 CFR 172.101, Column (3), and locate the hazard class of the material.
b. If more than one class is shown for the proper shipping name, determine the proper class by definition.
c. If the materials have more than one hazard, classify the material based on the order of hazards in 49 CFR 173.2.

STEP 3 - SELECT THE PROPER IDENTIFICATION NUMBERS.

a. Refer to the Table, 49 CFR 172.101, Column (3a), and select the Identification Number (ID) that corresponds to the proper shipping name and hazard class.
b. Enter the ID number(s) on the shipping papers and display them, as required, on packagings, placards and/or orange panels.

STEP 4 - DETERMINE THE MODE(S) OF TRANSPORT TO ULTIMATE DESTINATION.

a. As a shipper, you must assure yourself that the shipment complies with various modal requirements.
b. The modal requirements may affect the following: (1) Packaging; (2) Quantity per Package; (3) Marking; (4) Labeling; (5) Shipping Papers; and (6) Certification.

STEP 5 - SELECT THE PROPER LABEL(S) AND APPLY AS REQUIRED.

a. Refer to the Table, 49 CFR 172.101, Column (4) for required labels.
b. For details on labeling refer to (1) Additional Labels, 49 CFR 172.402; (2) Placement of Labels, 49 CFR 172.406; (3) Packagings (Mixed or Consolidated), 49 CFR 172.404(a) and (h); (4) Packages Containing Samples, 49 CFR 172.402(h); (5) Radioactive Materials, 49 CFR 172.403; and (6) Authorized Label Modifications, 49 CFR 172.405.

STEP 6 - DETERMINE AND SELECT THE PROPER PACKAGES.

a. Refer to the Table, 49 CFR 172.101, Column (5a) for exceptions and Column (5b) for specification packagings. Consider the following when selecting an authorized package: Quantity per Package; Cushioning Material, if required; Proper Closure and Reinforcement; Proper Pressure; Outage; etc., as required.
b. If packaged by a prior shipper, make sure the packaging is correct and in proper condition for transportation.

ATTACHMENT D (Continued)
GUIDE FOR HAZARDOUS MATERIALS SHIPPERS

STEP 7 - MARK THE PACKAGING (INCLUDING OVERPACKS).

a. Apply the required markings (49 CFR 172.300); Proper shipping name and ID number, when required (49 CFR 172.301); Name and address of Consignee or Consignor (49 CFR 172.306).
b. For details and other required markings, see 49 CFR 172.300 through 172.338.

STEP 8 - PREPARE THE SHIPPING PAPERS.

a. The basic requirements for preparing shipping papers include Proper Shipping Name; Hazard Class; ID Number; Total Quantity; Shipper's Certification; and Emergency Response Telephone Number.
b. Make all entries on the shipping papers using the information required and in proper sequence (49 CFR 172.202).

STEP 9 - CERTIFICATION.

a. Each shipper must certify by printing (manually or mechanically) on the shipping papers that the materials being offered for shipment are properly classified, described, packaged, marked and labeled, and in proper condition for transportation according to the applicable DOT Regulations (49 CFR 172.202).

STEP 10 - LOADING, BLOCKING, AND BRACING. When hazardous materials are loaded into the transport vehicle or freight container, each package must be loaded, blocked, and braced in accordance with the requirements for mode of transport.

a. If the shipper loads the freight container or transport vehicle, the shipper is responsible for the proper loading, blocking, and bracing of the materials.
b. If the carrier does the loading, the carrier is responsible.

STEP 11 - DETERMINE THE PROPER PLACARD(S). Each person who offers hazardous materials for transportation must determine that the placarding requirements have been met.

a. For Highway, unless the vehicle is already correctly placarded, the shipper must provide the required placard(s) and required ID number(s) (49 CFR 172.506).
b. For Rail, if loaded by the shipper, the shipper must placard the rail car if placards are required (49 CFR 172.508).
c. For Air and Water shipments, the shipper has the responsibility to apply the proper placards.

STEP 12 - HAZARDOUS WASTE/HAZARDOUS SUBSTANCE.

a. If the material is classed as a hazardous waste or hazardous substance, most of the above steps will be applicable.
b. Pertinent Environmental Protection Agency regulations are found in the Code of Federal Regulations, Title 40, Part 262.

As a final check and before offering the shipment for transportation, visually inspect your shipment. The shipper should ensure that emergency response information is on the vehicle for transportation of hazardous materials.

NOTE: This material may be reproduced without special permission from this office.

Revised March 1995.

ATTACHMENT E

HAZARDOUS MATERIALS SHIPPING CHECK LIST

PACKAGING

1. Check DOT 173.24 for appropriate type of package for hazardous substance.
2. Check for container integrity, especially the closure.
3. Check for sufficient absorbent material in package.
4. Check for sample tags and log sheets for each sample and for chain-of-custody record.

SHIPPING PAPERS

1. Check that entries contain only approved DOT abbreviations.
2. Check that entries are in English.
3. Check that hazardous material entries are specially marked to differentiate them from any nonhazardous materials being sent using same shipping paper.
4. Be careful that all hazardous classes are shown for multiclass materials.
5. Check total amounts by weight, quantity, or other measures used.
6. Check that any limited-quantity exemptions are so designated on the shipping paper.
7. Check that certification is signed by shipper.
8. Make certain driver signs for shipment.

RCRA MANIFEST

1. Check that approved state/federal manifests are prepared.
2. Check that transporter has the following: valid EPA identification number, valid driver's license, valid vehicle registration, insurance protection, and proper DOT labels for materials being shipped.
3. Check that destination address is correct.
4. Check that driver knows where shipment is going.
5. Check that the driver is aware of emergency procedures for spills and accidents.
6. Make certain driver signs for shipment.
7. Make certain one copy of executed manifest and shipping document is retained by shipper.

ATTACHMENT F

DOT SEGREGATION AND SEPARATION CHART

Class or Division	Notes	1.1-1.2	1.3	1.4	1.5	1.6	2.1	2.2	2 3 gas Zone A*	2 3 gas Zone B*	3	4.1	4.2	4 3	5.1	5.2	6.1 liquids PG-I Zone A*	7	8 liquids only
Explosives . . . . . 1.1 and 1.2	A	*	*	*	*	*	X	X	X	X	X	X	X	X	X	X	X	X	X
Explosives 1 3		*	*	*	*	*	X		X	X	X		X	X	X	X	X		X
Explosives 1 4		*	*	*	*	*	O		O	O	O		O				O		O
Very insensitive explosives 1.5	A	*	*	*	*	*	X	X	X	X	X	X	X	X	X	X	X	X	X
Extremely insensitive explosives 1.6		*	*	*	*	*													
Flammable gases 2 1		X	X	O	X				X	O							O	O	
Non-toxic, non-flammable gases 2 2		X			X														
Poisonous gas - Zone A** 2 3		X	X	O	X		X				X	X	X	X	X	X			X
Poisonous gas - Zone B** 2 3		X	X	O	X		O				O	O	O	O	O	O			O
Flammable liquids 3		X	X	O	X				X	O					O		X		
Flammable solids 4.1		X			X				X	O							X		O
Spontaneously combustible materials 4 2		X	X	O	X				X	O							X		X
Dangerous-when-wet materials 4 3		X	X		X				X	O							X		O
Oxidizers 5.1	A	X	X		X				X	O	O						X		O
Organic peroxides 5.2		X	X		X				X	O							X		O
Poisonous liquids PG I - Zone A** . . 6.1		X	X	O	X		O				X	X	X	X	X	X			X
Radioactive materials 7		X			X		O												
Corrosive liquids 8		X	X	O	X				X	O		O	X	O	O	O	X		

No entry means that the materials are compatible (have no restrictions).

X These materials may not be loaded, transported, or stored together in the same vehicle or facility.
O The materials may not be loaded, transported, or stored together in the same vehicle or facility unless they are separated for 4 feet on all sides.
* Check the explosives compatibility chart in 49 CFR 179 848(f).
A Ammonium nitrate fertilizers may be stored with Division 1.1 materials.
** Denotes inhalation hazardous for poisons; consult field team leader or project manager if you encounter a material in this class before shipment

ATTACHMENT G
LITHIUM BATTERY SHIPPING PAPERS

3224637861

TRANSPORT DETAILS

This shipment is within the limitations prescribed for: (delete non applicable)

[redacted] | CARGO AIRCRAFT ONLY

Airport of Departure:

Airport of Destination: 19CYS

Two completed and signed copies of this Declaration must be handed to the operator.

WARNING

Failure to comply in all respects with the applicable Dangerous Goods Regulations may be in breach of the applicable law, subject to legal penalties. This Declaration must not, in any circumstances, be completed and/or signed by a consolidator, a forwarder or an IATA cargo agent.

Shipment type: *(delete non-applicable)*

NON-RADIOACTIVE | [redacted]

NATURE AND QUANTITY OF DANGEROUS GOODS

Dangerous Goods Identification						
Proper Shipping Name	Class or Division	UN or ID No.	Subsidiary Risk	Quantity and type of packing	Packing Inst.	Authorization
LITHIUM BATTERIES CONTAINED IN EQUIPMENT	9	UN3091		1 PLASTIC BOX X 55 GRAMS	912 II	PER CA-9206009

Additional Handling Information

1 HERMIT SERIES DATALOGGER X 55 GRAMS (11 GRAMS/CELL)

I hereby declare that the contents of this consignment are fully and accurately described above by proper shipping name and are classified, packed, marked, and labeled, and are in all respects in the proper condition for transport by air according to the applicable International and National Government Regulations.

Name/Title of Signatory

Place and Date

Signature *(see warning above)*

Emergency Telephone Number (Required for US Origin or Destination Shipments)
800-535-5053

IF ACCEPTABLE FOR PASSENGER AIRCRAFT, THIS SHIPMENT CONTAINS RADIOACTIVE MATERIAL INTENDED FOR USE IN, OR INCIDENT TO, RESEARCH, MEDICAL DIAGNOSIS, OR TREATMENT.

ATTACHMENT G (CONTINUED)
LITHIUM BATTERY SHIPPING PAPERS

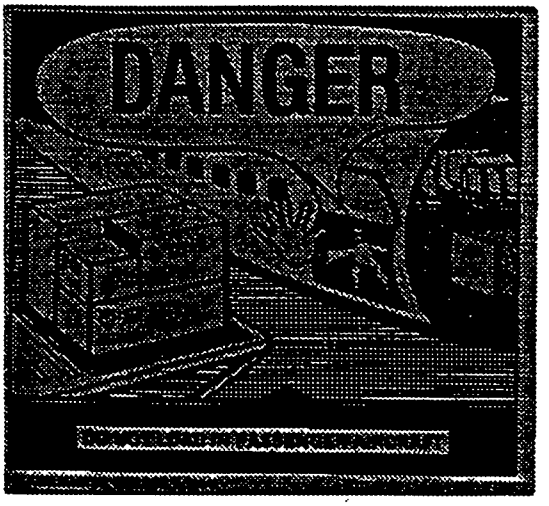

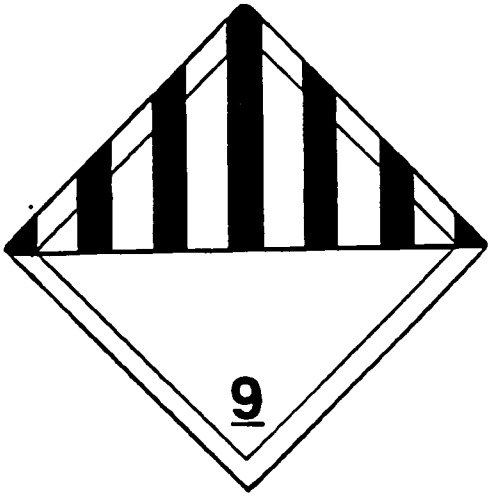

LITHIUM BATTERIES CONTAINED IN EQUIPMENT.
UN-3091.
SHIPPED UNDER CA-9206009

TABLE OF CONTENTS

SECTION **PAGE**

1.0 PURPOSE 2

2.0 SCOPE 2

3.0 GLOSSARY 2

4.0 RESPONSIBILITIES 3

5.0 PROCEDURES 3

5.1 Overview 3
5.2 Soil Sample Collection 4
5.2.1 Procedure for Collecting Volatile Soil Samples 4
5.2.2 Procedure for Collecting Non-Volatile Soil Samples 4
5.2.3 Procedure for Collecting Undisturbed Soil Samples (ASTM D1587-83) 4
5.3 Surface Soil Sampling 5
5.4 Near-Surface Soil Sampling 6
5.5 Subsurface Soil Sampling with a Hand Auger 6
5.6 Subsurface Soil Sampling with a Split-Barrel Sampler (ASTM D1586-84) 7
5.7 Excavation and Sampling of Test Pits and Trenches 8
5.7.1 Applicability 8
5.7.2 Test Pit and Trench Excavation 9
5.7.3 Sampling in Test Pits and Trenches 10
5.7.4 Backfilling of Trenches and Test Pits 14
5.8 Records 14

6.0 REFERENCES 15

ATTACHMENTS

A SPLIT-SPOON SAMPLER 16
B REMOTE SAMPLE HOLDER FOR TEST PIT/TRENCH SAMPLING 17

1.0 PURPOSE

This procedure discusses the methods used to collect surface, near surface, and subsurface soil samples. Additionally, it describes the method for sampling of test pits and trenches to determine subsurface soil and rock conditions, and recover small-volume or bulk samples.

2.0 SCOPE

This procedure is applicable to the collection of surface, near surface and subsurface soils for laboratory testing, which are exposed through hand digging, hand augering, drilling, or machine excavating at hazardous substance sites.

3.0 GLOSSARY

Composite Sample - A composite sample exists as a combination of more than one sample at various locations and/or depths and times, which is homogenized and treated as one sample. This type of sample is usually collected when determination of an average waste concentration for a specific area is required. Composite samples are not to be collected for volatile organics analysis.

Grab Sample - One sample collected at one location and at one specific time.

Non-Volatile Sample - A non-volatile sample includes all other chemical parameters (e.g., semivolatiles, pesticides/PCBs, metals, etc.) and those engineering parameters that do not require undisturbed soil for their analysis.

Hand Auger - A sampling device used to extract soil from the ground in a relatively undisturbed form.

Thin-Walled Tube Sampler - A thin-walled metal tube (also called a Shelby tube) used to recover relatively undisturbed soil samples. These tubes are available in various sizes, ranging from 2 to 5 inches outside diameter (OD) and from 18 to 54 inches in length.

Split-Barrel Sampler - A steel tube, split in half lengthwise, with the halves held together by threaded collars at either end of the tube. Also called a split-spoon sampler, this device can be driven into resistant materials using a drive weight mounted in the drilling string. A standard split-barrel sampler is typically available in two common lengths, providing either 20-inch or 26-inch longitudinal clearance for obtaining 18-inch or 24-inch-long samples, respectively. These split-barrel samplers commonly range in size from 2-inch OD to 3-1/2 inch OD. The larger sizes are commonly used when a larger volume of sample material is required.

Test Pit and Trench - Open, shallow excavations, typically rectangular (if a test pit) or longitudinal (if a trench), excavated to determine the shallow subsurface conditions for engineering, geological, and soil chemistry exploration and/or sampling purposes. These pits are excavated manually or by machine (e.g., backhoe, clamshell, trencher excavator, or bulldozer).

Confined Space - As stipulated in 29 CFR 1910.146, a confined space means a space that: 1) is large enough and so configured that an employee can bodily enter and perform assigned work; 2) has limited or restricted means for entry or exit (for example tanks, vessels, silos, storage bins, hoppers, vaults, and pits, and excavations are spaces that may have limited means of entry.); and 3) is not designed for continuous employee occupancy. Brown & Root Environmental considers all confined space as permit-required confined spaces.

4.0 RESPONSIBILITIES

Project Manager - The Project Manager is responsible for determining sampling objectives, as well as, the field procedures used in the collection of soil samples. Additionally, in consultation with other project personnel (geologist, hydrogeologist, etc.), the Project Manager establishes the need for test pits or trenches, and determines their approximate locations and dimensions.

Site Safety Officer (SSO) - The SSO (or a qualified designee) is responsible for providing the technical support necessary to implement the project Health and Safety Plan. This will include (but not be limited to) performing air quality monitoring during sampling, boring and excavation activities, and to ensure that workers and offsite (downwind) individuals are not exposed to hazardous levels of airborne contaminants. The SSO/designee may also be required to advise the FOL on other safety-related matters regarding boring, excavation and sampling, such as mitigative measures to address potential hazards from unstable trench walls, puncturing of drums or other hazardous objects, etc.

Field Operations Leader (FOL) - The FOL is responsible for finalizing the location of surface, near surface, and subsurface (hand and machine borings, test pits/trenches) soil samples. He/she is ultimately responsible for the sampling and backfilling of boreholes, test pits and trenches, and for adherence to OSHA regulations during these operations.

Project Geologist/Sampler - The project geologist/sampler is responsible for the proper acquisition of soil samples and the completion of all required paperwork (i.e., sample log sheets, field notebook, boring logs, test pit logs, container labels, custody seals, and chain-of-custody forms).

Competent Person - A Competent Person, as defined in 29 CFR 1929.650 of Subpart P - Excavations, means one who is capable of identifying existing and predictable hazards in th surroundings, or working conditions which are unsanitary, hazardous, or dangerous to employe s, and who has authorization to take prompt corrective measures to eliminate them.

5.0 PROCEDURES

5.1 Overview

Soil sampling is an important adjunct to groundwater monitoring. Sampling of the soil horizons above the groundwater table can detect contaminants before they have migrated into the water table, and can establish the amount of contamination sorbed on aquifer solids that have the potential of contributing to groundwater contamination.

Soil types can vary considerably on a hazardous waste site. These variations, along with vegetation, can effect the rate of contaminant migration through the soil. It is important, therefore, that a detailed record be maintained during the sampling operations, particularly noting the location, depth, and such characteristics as grain size, color, and odor. Subsurface conditions are often stable on a daily basis and may demonstrate only slight seasonal variation especially with respect to temperature, available oxygen and light penetration. Changes in any of these conditions can radically alter the rate of chemical reactions or the associated microbiological community, thus further altering specific site conditions. As a result, samples must be kept at their at-depth temperature or lower, protected from direct light, sealed tightly in approved glass containers and be analyzed as soon as possible.

The physical properties of the soil, its grain size, cohesiveness, associated moisture, and such factors as depth to bedrock and water table, will limit the depth from which samples can be collected and the method required to collect them. Often this information on soil properties can be obtained from published soil surveys available through the U.S. Geological Surveys and other government or farm agencies. It is the intent of this procedure to present the most commonly employed soil sampling methods used at hazardous waste sites.

5.2 Soil Sample Collection

5.2.1 Procedure for Collecting Volatile Soil Samples Volatile samples are only collected as grab samples and maintained and handled in as near an undisturbed state as possible. The sample is transferred directly into an approved glass container with a Teflon lined cap. The sample must be packed down as much as possible to reduce air space within the sample container to an absolute minimum. Also, a properly filled volatile organics sample container will have no head space.

5.2.2 Procedure for Collecting Non-Volatile Soil Samples

Non-volatile soil samples may be collected as either grab or composite samples. The non-volatile soil sample is thoroughly mixed in a stainless steel or disposable, inert plastic tray, using a stainless steel trowel or other approved tool, then transferred into the appropriate sample container(s). Head space is permitted in a non-volatile soil sample container to allow for sample expansion.

5.2.3 Procedure for Collecting Undisturbed Soil Samples (ASTM D1587-83)

When it is necessary to acquire undisturbed samples of soil for purposes of engineering parameter analysis (e.g., permeability), a thin-walled, seamless tube sampler (Shelby tube) will be employed. The following method will be used:

1. Remove all surface debris (e.g., vegetation, roots, twigs, etc.) from the specific sampling location and drill and clean out the borehole to the sampling depth, being careful to minimize the chance for disturbance of the material to be sampled. In saturated material, withdraw the drill bit slowly to prevent loosening of the soil around the borehole and to maintain the water level in the hole at or above groundwater level.

2. The use of bottom discharge bits or jetting through an open-tube sampler to clean out the borehole shall not be allowed. Use of any side-discharge bits is permitted.

3. A stationary piston-type sampler may be required to limit sample disturbance and aid in retaining the sample. Either the hydraulically operated or control rod activated-type of stationary piston sampler may be used. Prior to inserting the tube sampler into the borehole, check to ensure that the sampler head contains a check valve. The check valve is necessary to keep water in the rods from pushing the sample out the tube sampler during sample withdrawal and to maintain a suction within the tube to help retain the sample.

4. To minimize chemical reaction between the sample and the sampling tube, brass tubes may be required, especially if the tube is stored for an extended time prior to testing. While steel tubes coated with shellac are less expensive than brass, they're more reactive, and shall only be used when the sample will be tested within a few days after sampling or if chemical reaction is not anticipated. With the sampling tube resting on the bottom of the hole and the water level in the boring at groundwater level or above, push the tube into the soil by a

continuous and rapid motion, without impacting or twisting. In no case shall the tube be pushed farther than the length provided for the soil sample. Allow about 3 inches in the tube for cuttings and sludge.

5. Upon removal of the sampling tube from the hole, measure the length of sample in the tube and also the length penetrated. Remove disturbed material in the upper end of the tube and measure the length of sample again. After removing at least an inch of soil from the lower end and after inserting an impervious disk, seal both ends of the tube with at least a 1/2-inch thickness of wax applied in a way that will prevent the wax from entering the sample. Clean filler must be placed in voids at either end of the tube prior to sealing with wax. Place plastic caps on the ends of the sample tube, tape the caps in place, and dip the ends in wax.

6. Affix label(s) to the tube as required and record sample number, depth, penetration, and recovery length on the label. Mark the "up" direction on the side of the tube with indelible ink, and mark the end of the sample. Complete Chain-of-Custody and other required forms (see SOP SA-6.3). Do not allow tubes to freeze, and store the samples vertically with the same orientation they had in the ground, (i.e., top of sample is up) in a cool place out of the sun at all times. Ship samples protected with suitable resilient packing material to reduce shock, vibration, and disturbance.

Thin-walled undisturbed tube samplers are restricted in their usage by the consistency of the soil to be sampled. Often, very loose and/or wet samples cannot be retrieved by the samplers, and soils with a consistency in excess of very stiff cannot be penetrated by the sampler. Devices such as Dennison or Pitcher core samplers can be used to obtain undisturbed samples of stiff soils. Using these devices normally increases sampling costs, and therefore their use shall be weighed against the need for acquiring an undisturbed sample.

5.3 Surface Soil Sampling

The simplest, most direct method of collecting surface soil samples (most commonly collected to a depth of 6 inches) for subsequent analysis is by use of a stainless steel trowel.

In general, the following equipment is necessary for obtaining surface soil samples:

- Stainless steel trowel.
- Real-time air monitoring instrument (e.g., PID, FID, etc.).
- Latex gloves.
- Required Personal Protective Equipment (PPE).
- Required paperwork.
- Required decontamination equipment.
- Required sample container(s).
- Wooden stakes or pin flags.
- Sealable polyethylene bags (i.e., Ziploc baggies).
- Heavy duty cooler.
- Ice (if required) double-bagged in sealable polyethylene bags.
- Chain-of-custody records and custody seals.

When acquiring surface soil samples, the following procedure shall be used:

1. Carefully remove vegetation, roots, twigs, litter, etc., to expose an adequate soil surface area to accommodate sample volume requirements.

2. Using a decontaminated stainless steel trowel, follow the procedure cited in Section 5.2.1 for collecting a volatile soil sample.

3. Thoroughly mix (in-situ) a sufficient amount of soil to fill the remaining sample containers and transfer the sample into those containers utilizing the same stainless steel trowel employed above. Cap and securely tighten all sample containers.

4. Affix a sample label to each container. Be sure to fill out each label carefully and clearly, addressing all the categories described in SOP SA-6.3.

5. Proceed with the handling and processing of each sample container as described in SOP SA-6.2.

5.4 Near-Surface Soil Sampling

Collection of samples from near the surface (depth of 6-18 inches) can be accomplished with tools such as shovels and stainless steel trowels.

The following equipment is necessary to collect near surface soil samples:

- Clean shovel.
- Plus the equipment listed under Section 5.3 of this procedure.

To obtain near-surface soil samples, the following protocol shall be observed:

1. With a clean shovel, make a series of vertical cuts to the depth required in the soil to form a square approximately 1 foot by 1 foot.

2. Lever out the formed plug and scrape the bottom of the freshly dug hole with a decontaminated stainless steel trowel to remove any loose soil.

3. Follow steps 2 through 5 listed under Section 5.3 of this procedure.

5.5 Subsurface Soil Sampling With a Hand Auger

A hand augering system generally consists of a variety of all stainless steel bucket bits (i.e., cylinders 6-1/2" long, and 2-3/4", 3-1/4", and 4" in diameter), a series of extension rods (available in 2', 3', 4' and 5' lengths), and a cross handle. A larger diameter bucket bit is commonly used to bore a hole to the desired sampling depth and then withdrawn. In turn, the larger diameter bit is replaced with a smaller diameter bit, lowered down the hole, and slowly turned into the soil at the completion depth (approximately 6"). The apparatus is then withdrawn and the soil sample collected.

The hand auger can be used in a wide variety of soil conditions. It can be used to sample soil both from the surface, or to depths in excess of 12 feet. However, the presence of rock layers and the collapse of the borehole normally contribute to its limiting factors.

To accomplish soil sampling using a hand augering system, the following equipment is required:

- Complete hand auger assembly (variety of bucket bit sizes).
- Stainless steel mixing bowls.
- Plus the equipment listed under Section 5.3 of this procedure.

To obtain soil samples using a hand auger, the following procedure shall be followed:

1 Attach a properly decontaminated bucket bit to a clean extension rod and further attach the cross handle to the extension rod.

2. Clear the area to be sampled of any surface debris (vegetation, twigs, rocks, litter, etc.).

3. Begin augering (periodically removing accumulated soils from the bucket bit) and add additional rod extensions as necessary. Also, note (in a field notebook or on standardized data sheets) any changes in the color, texture or odor of the soil.

4. After reaching the desired depth, slowly and carefully withdraw the apparatus from the borehole.

5. Remove the soiled bucket bit from the rod extension and replace it with another properly decontaminated bucket bit. The bucket bit used for sampling is commonly smaller in diameter than the bucket bit employed to initiate the borehole.

6. Carefully lower the apparatus down the borehole. Care must be taken to avoid scraping the borehole sides.

7. Slowly turn the apparatus until the bucket bit is advanced approximately 6 inches.

8. Discard the top of the core (approximately 1"), which represents any loose material collected by the bucket bit before penetrating the sample material.

9. Fill volatile sample container(s), using a properly decontaminated stainless steel trowel, with sample material directly from the bucket bit. Refer to Section 5.2.1 of this procedure.

10. Utilizing the above trowel, remove the remaining sample material from the bucket bit and place into a properly decontaminated stainless steel mixing bowl and thoroughly homogenize the sample material prior to filling the remaining sample containers. Refer to Section 5.2.2 of this procedure.

11. Follow steps 4 and 5 listed under Section 5.3 of this procedure.

5.6 Subsurface Soil Sampling With a Split-Barrel Sampler (ASTM D1586-84)

Split-barrel (split-spoon) samplers consist of a heavy carbon steel or stainless steel sampling tube that can be split into two equal halves to reveal the soil sample (see Attachment A). A drive head is attached to the upper end of the tube and serves as a point of attachment for the drill rod. A removable tapered nosepiece/drive shoe attaches to the lower end of the tube and facilitates cutting. A basket-like sample retainer can be fitted to the lower end of the split tube to hold loose, dry soil samples in the tube when the sampler is removed from the drill hole. This split-barrel sampler is made to be attached to a drill rod and forced into the ground by means of a 140-lb. or larger casing driver.

Split-barrel samplers are used to collect soil samples from a wide variety of soil types and from depths greater than those attainable with other soil sampling equipment.

The following equipment is used for obtaining split-barrel samples:

- Drilling equipment (provided by subcontractor).
- Split-barrel samplers (O.D. 2 inches, I D. 1-3/8 inches, either 20 inches or 26 inches long); Larger O.D. samplers are available if a larger volume of sample is needed.
- Drive weight assembly, 140-lb. weight, driving head and guide permitting free fall of 30 inches.
- Stainless steel mixing bowls.
- Plus equipment listed under Section 5.3 of this procedure.

The following steps shall be followed to obtain split-barrel samples:

1. Remove the drive head and nosepiece, and open the sampler to reveal the soil sample. Immediately scan the sample core with a real-time air monitoring instrument (e.g., OVA, HNu, etc.). Carefully separate the soil core, with a decontaminated stainless steel knife or trowel, at about 6-inch intervals while scanning the center of the core for elevated readings. Also scan stained soil, soil lenses, and anomalies (if present), and record readings.
2. Collect the volatile sample from the center of the core where elevated readings occurred. If no elevated readings where encountered the sample material should still be collected from the core's center (this area represents the least disturbed area with minimal atmospheric contact). Refer to Section 5.2.1 of this procedure.
3. Using the same trowel, remove remaining sample material from the split-barrel sampler (except for the small portion of disturbed soil usually found at the top of the core sample) and place the soil into a decontaminated stainless steel mixing bowl. Thoroughly homogenize th sample material prior to filling the remaining sample containers. Refer to Section 5.2.2 of this procedure.
4. Follow steps 4 and 5 listed under Section 5.3 of this procedure.

5.7 Excavation and Sampling of Test Pits and Trenches

5.7.1 Applicability

This subsection presents routine test pit or trench excavation techniques and specialized techniques that are applicable under certain conditions.

During the excavation of trenches or pits at hazardous waste sites, several health and safety concerns arise which control the method of excavation. No personnel shall enter any test pit or excavation except as a last resort, and then only under direct supervision of a Competent Person (as defined in 29 CFR 1929.650 of Subpart P - Excavations). Whenever possible, all required chemical and lithological samples should be collected using the excavator bucket or other remote sampling apparatus. If entrance is still required, all test pits or excavations must be stabilized by bracing the pit sides using specifically designed wooden or steel support structures. Personnel entering the excavation may be exposed to toxic or explosive gases and oxygen-deficient environments. Any entry may constitute a Confined Space and must be done in conformance with all applicable regulations. In these cases, substantial air monitoring is required before entry, and appropriate respiratory gear and protective clothing is mandatory. There must be at least tw persons present at the immediate site before entry by on of the investigators. The reader shall

refer to OSHA regulations 29 CFR 1926, 29 CFR 1910.120, 29 CFR 1910.134, AND 29 CFR 1910.146.

Excavations are generally not practical where a depth of more than about 15 feet is desired, and they are usually limited to a few feet below the water table. In some cases, a pumping system may be required to control water levels within the pit, providing that pumped water can be adequately stored or disposed. If data on soils at depths greater than 15 feet are required, the data are usually obtained through test borings instead of test pits.

In addition, hazardous wastes may be brought to the surface by excavation equipment. This material, whether removed from the site or returned to the subsurface, must be properly handled according to any and all applicable federal, state, and local regulations.

5.7.2 Test Pit and Trench Excavation

These procedures describe the methods for excavating and logging test pits and trenches excavated to determine subsurface soil and rock conditions. Test pit operations shall be logged and documented as described in SOP SA-6.3.

Test pits and trenches may be excavated by hand or by power equipment to permit detailed description of the nature and contamination of the in-situ materials. The size of the excavation will depend primarily on the following:

- The purpose and extent of the exploration.
- The space required for efficient excavation.
- The chemicals of concern.
- The economics and efficiency of available equipment.

Test pits normally have a cross section that is 4 to 10 feet square; test trenches are usually 3 to 6 feet wide and may be extended for any length required to reveal conditions along a specific line. The following table, which is based on equipment efficiencies, gives a rough guide for design consideration:

Equipment	Typical Widths, in Feet
Trenching machine	2
Backhoe	2-6
Track dozer	10
Track loader	10
Excavator	10
Scraper	20

The lateral limits of excavation of trenches and the position of test pits shall be carefully marked on area base maps. If precise positioning is required to indicate the location of highly hazardous waste materials, nearby utilities, or dangerous conditions, the limits of the excavation shall be surveyed. Also, if precise determination of the depth of buried materials is needed for design or environmental assessment purposes, the elevation of the ground surface at the test pit or trench location shall also be determined by survey. If the test pit/trench will not be surveyed immediately,

it shall be backfilled and its position identified with stakes placed in the ground at the margin of the excavation for later surveying.

The construction of test pits and trenches shall be planned and designed in advance as much as possible. However, field conditions may necessitate revisions to the initial plans. The final depth and construction method shall be determined by the field geologist. The actual layout of each test pit, temporary staging area and spoils pile will be predicated based on site conditions and wind direction at the time the test pit is made. Prior to excavation, the area can be surveyed by magnetometer or metal detector to identify the presence of underground utilities or drums.

As mentioned previously, no personnel shall enter any test pit or excavation except as a last resort, and then only under direct supervision of a Competent Person. If entrance is still required, Occupational Safety and Health Administration (OSHA) requirements must be met (e.g., walls must be braced with wooden or steel braces, ladders must be in the hole at all times, and a temporary guardrail must be placed along the surface of the hole before entry). It is emphasized that the project data needs should be structured such that required samples can be collected without requiring entrance into the excavation. For example, samples of leachate, groundwater, or sidewall soils can be taken with telescoping poles, etc.

Dewatering may be required to assure the stability of the side walls, to prevent the bottom of the pit from heaving, and to keep the excavation dry. This is an important consideration for excavations in cohesionless material below the groundwater table. Liquids removed as a result of dewatering operations must be handled as potentially contaminated materials. Procedures for the collection and disposal of such materials should be discussed in the site-specific project plans.

5.7.3 Sampling in Test Pits and Trenches

5.7.3.1 General

Test pits and trenches are usually logged as they are excavated. Records of each test pit/trench will be made as described in SOP SA-6.3. These records include plan and profile sketches of the test pit/trench showing materials encountered, their depth and distribution in the pit/trench, and sample locations. These records also include safety and sample screening information.

Entry of test pits by personnel is extremely dangerous, shall be avoided unless absolutely necessary, and can occur only after all applicable Health and Safety and OSHA requirements have been met.

The final depth and type of samples obtained from each test pit will be determined at the time the test pit is excavated. Sufficient samples are usually obtained and analyzed to quantify contaminant distribution as a function of depth for each test pit. Additional samples of each wast phase and any fluids encountered in each test pit may also be collected.

In some cases, samples of soil may be extracted from the test pit for reasons other than waste sampling and chemical analysis, for instance, to obtain geotechnical information. Such information would include soil types, stratigraphy, strength, etc., and could therefore entail the collection of disturbed (grab or bulk) or relatively undisturbed (hand-carved or pushed/driven) samples, which can be tested for geotechnical properties. The purposes of such explorations are very similar to those of shallow exploratory or test borings, but often test pits offer a faster, more cost-effective method of sampling than installing borings.

5.7.3.2 Sampling Equipment

The following equipment is needed for obtaining samples for chemical or geotechnical analysis from test pits and trenches:

- Backhoe or other excavating machinery.
- Shovels, picks and hand augers, stainless steel trowels.
- Sample container - bucket with locking lid for large samples; appropriate bottleware for chemical or geotechnical analysis samples.
- Polyethylene bags for enclosing sample containers; buckets.
- Remote sampler consisting of 10-foot sections of steel conduit (1-inch-diameter), hose clamps and right angle adapter for conduit (see Attachment B).

5.7.3.3 Sampling Methods

The methods discussed in this section refer to test pit sampling from grade level. If test pit entry is required, see Section 5.7.3.4.

- Excavate trench or pit in several depth increments. After each increment, the operator will wait while the sampler inspects the test pit from grade level to decide if conditions are appropriate for sampling. (Monitoring of volatiles by the SSO will also be used to evaluate the need for sampling.) Practical depth increments range from 2 to 4 feet.
- The backhoe operator, who will have the best view of the test pit, will immediately ceas digging if:
- Any fluid phase or groundwater seepage is encountered in the test pit.
- Any drums, other potential waste containers, obstructions or utility lines are encountered.
- Distinct changes of material are encountered.

This action is necessary to permit proper sampling of the test pit and to prevent a breach of safety protocol. Depending upon the conditions encountered, it may be required to excavate more slowly and carefully with the backhoe.

For obtaining test pit samples from grade level, the following procedure shall be followed:

- Remove loose material to the greatest extent possible with backhoe.
- Secure walls of pit if necessary. (There is seldom any need to enter a pit or trench which would justify the expense of shoring the walls. All observations and samples should be taken from the ground surface.)
- Samples of the test pit material are to be obtained either directly from the backhoe bucket or from the material once it has been deposited on the ground. The sampler or Field Operations Leader directs the backhoe operator to remove material from the selected depth or location within the test pit/trench. The bucket is brought to the surface and moved away from the pit.

The sampler and/or SSO then approaches the bucket and monitors its contents with a photoionization or flame ionization detector. The sample is collected from the center of the bucket or pile and placed in sample containers using a decontaminated stainless steel trowel or spatula.

- If a composite sample is desired, several depths or locations within the pit/trench are selected and a bucket is filled from each area. It is preferable to send individual sample bottles filled from each bucket to the laboratory for compositing under the more controlled laboratory conditions. However, if compositing in the field is required, each sample container shall be filled from materials that have been transferred into a mixing bucket and homogenized. Note that homogenization/compositing is not applicable for samples to be subjected to volatile organic analysis.

- Using the remote sampler shown in Attachment B, samples can be taken at the desired depth from the side wall or bottom of the pit. The face of the pit/trench shall first be scraped (using a long-handled shovel or hoe) to remove the smeared zone that has contacted the backhoe bucket. The sample shall then be collected directly into the sample jar, by scraping with the jar edge, eliminating the need to utilize samplers and minimizing the likelihood of cross-contamination. The sample jar is then capped, removed from the assembly, and packaged for shipment.

- Complete documentation as described in SOP SA-6.3.

5.7.3.4 <u>In-Pit Sampling</u>

Under rare conditions, personnel may be required to enter the test pit/trench. This is necessary only when soil conditions preclude obtaining suitable samples from the backhoe bucket (e.g., excessive mixing of soils or wastes within the test pit/trench) or when samples from relatively small discrete zones within the test pit are required. This approach may also be necessary to sample any seepage occurring at discrete levels or zones in the test pit that are not accessible with remote samplers.

In general, personnel shall sample and log pits and trenches from the ground surface, except as provided for by the following criteria:

- There is no practical alternative means of obtaining such data.

- The Site Safety Officer and Competent Person determines that such action can be accomplished without breaching site safety protocol. This determination will be based on actual monitoring of the pit/trench after it is dug (including, at a minimum, measurements of volatile organics, explosive gases and available oxygen).

- A Company-designated Competent Person determines that the pit/trench is stable or is made stable (by grading the sidewalls or using shoring) prior to entrance of any personnel. OSHA requirements must be strictly observed.

If these conditions are satisfied, one person will enter the pit/trench. On potentially hazardous waste sites, this individual will be dressed in safety gear as required by the conditions in the pit, usually Level B. He/she will be affixed to a safety rope and continuously monitored while in the pit.

A second individual will be fully dressed in protective clothing including a self-contained breathing device and on standby during all pit entry operations. The individual entering the pit will remain therein for as brief a period as practical, commensurate with performance of his/her work. After removing the smeared zone, samples shall be obtained with a decontaminated trowel or spoon. As an added precaution, it is advisable to keep the backhoe bucket in the test pit when personnel are working below grade. Such personnel can either stand in or near the bucket while performing sample operations. In the event of a cave-in they can either be lifted clear in the bucket, or at least climb up on the backhoe arm to reach safety.

5.7.3.5 Geotechnical Sampling

In addition to the equipment described in Section 5.7.3.2, the following equipment is needed for geotechnical sampling:

- Soil sampling equipment, similar to that used in shallow drilled boring (i.e., open tube samplers), which can be pushed or driven into the floor of the test pit.
- Suitable driving (i.e., a sledge hammer) or pushing (i.e., the backhoe bucket) equipment which is used to advance the sampler into the soil.
- Knives, spatulas, and other suitable devices for trimming hand-carved samples.
- Suitable containers (bags, jars, tubes, boxes, etc.), labels, wax, etc. for holding and safely transporting collected soil samples.
- Geotechnical equipment (pocket penetrometer, torvane, etc.) for field testing collected soil samples for classification and strength properties.

Disturbed grab or bulk geotechnical soil samples may be collected for most soils in the same manner as comparable soil samples for chemical analysis. These collected samples may be stored in jars or plastic-lined sacks (larger samples), which will preserve their moisture content. Smaller samples of this type are usually tested for their index properties to aid in soil identification and classification, while larger bulk samples are usually required to perform compaction tests.

Relatively undisturbed samples are usually extracted in cohesive soils using open tube samplers, and such samples are then tested in a geotechnical laboratory for their strength, permeability and/or compressibility. The techniques for extracting and preserving such samples are similar to those used in performing Shelby tube sampling in borings, except that the sampler is advanced by hand or backhoe, rather than by a drill rig. Also, the sampler may be extracted from the test pit by excavation around the sampler when it is difficult to pull it out of the ground. If this excavation requires entry of the test pit, the requirements described in Section 5.7.3.4 of this procedure must be followed. The open tube sampler shall be pushed or driven vertically into the floor or steps excavated in the test pit at the desired sampling elevations. Extracting tube samples horizontally from the walls of the test pit is not appropriate, because the sample will not have the correct orientation.

A sledge hammer or the backhoe may be used to drive or push the sampler or tube into the ground. Place a piece of wood over the top of the sampler or sampling tube to prevent damage during driving/pushing of the sample. Pushing the sampler with a constant thrust is always preferable to driving it with repeated blows, thus minimizing disturbance to the sample. If the sample cannot be extracted by rotating it at least two revolutions (to shear off the sample at the bottom), hand-excavate to remove the soil from around the sides of the sampler. If hand-

excavation requires entry of the test pit, the requirements in Section 5.7.3.4 of this procedure must be followed. Prepare, label, pack and transport the sample in the required manner, as described in SOP SA-6.3.

5.7.4 Backfilling of Trenches and Test Pits

All test pits and excavations must be either backfilled, covered, or otherwise protected at the nd of each day. No excavations shall remain open during non working hours unless adequately covered or otherwise protected.

Before backfilling, the onsite crew shall photograph all significant features exposed by the test pit and trench and shall include in the photograph a scale to show dimensions. Photographs of test pits shall be marked to include site number, test pit number, depth, description of feature, and date of photograph. In addition, a geologic description of each photograph shall be entered in the site logbook. All photographs shall be indexed and maintained as part of the project file for future reference.

After inspection, backfill material shall be returned to the pit under the direction of the FOL.

If a low permeability layer is penetrated (resulting in groundwater flow from an upper contaminated flow zone into a lower uncontaminated flow zone), backfill material must represent original conditions or be impermeable. Backfill could consist of a soil-bentonite mix prepared in a proportion specified by the FOL (representing a permeability equal to or less than original conditions). Backfill can be covered by "clean" soil and graded to the original land contour. Revegetation of the disturbed area may also be required.

5.8 Records

The appropriate sample log sheet (see SOP SA-6.3; Field Documentation) must be completed by the site geologist/sampler. All soil sampling locations must be documented by tying in the location of two or more nearby permanent landmarks (building, telephone pole, fence, etc.) and shall be noted the appropriate sample log sheet, site map, or field notebook. Surveying may als b necessary, depending on the project requirements.

Test pit logs (see SOP SA-6.3, Field Documentation) shall contain a sketch of pit conditions. In addition, at least one photograph with a scale for comparison shall be taken of each pit. Included in the photograph shall be a card showing the test pit number. Boreholes, test pits and trenches shall be logged by the field geologist in accordance with SOP GH-1.5.

Other data to be recorded in the field logbook include the following:

- Name and location of job.
- Date of boring and excavation.
- Approximate surface elevation.
- Total depth of boring and excavation.
- Dimensions of pit.
- Method of sample acquisition.
- Type and size of samples.
- Soil and rock descriptions.
- Photographs.
- Groundwater levels.

- Organic gas or methane levels.
- Other pertinent information, such as waste material encountered.

6.0 REFERENCES

American Society for Testing and Materials. 1987. ASTM Standards D1587-83 and D1586-84. ASTM Annual Book of Standards. ASTM. Philadelphia, Pennsylvania. Volume 4.08.

NUS Corporation, 1986. Hazardous Material Handling Training Manual.

NUS Corporation and CH2M Hill, August. 1987. Compendium of Field Operation Methods. Prepared for the U.S. EPA.

OSHA, Excavation, Trenching and Shoring 29 CFR 1926.650-653.

OSHA, Confined Space Entry 29 CFR 1910.146.

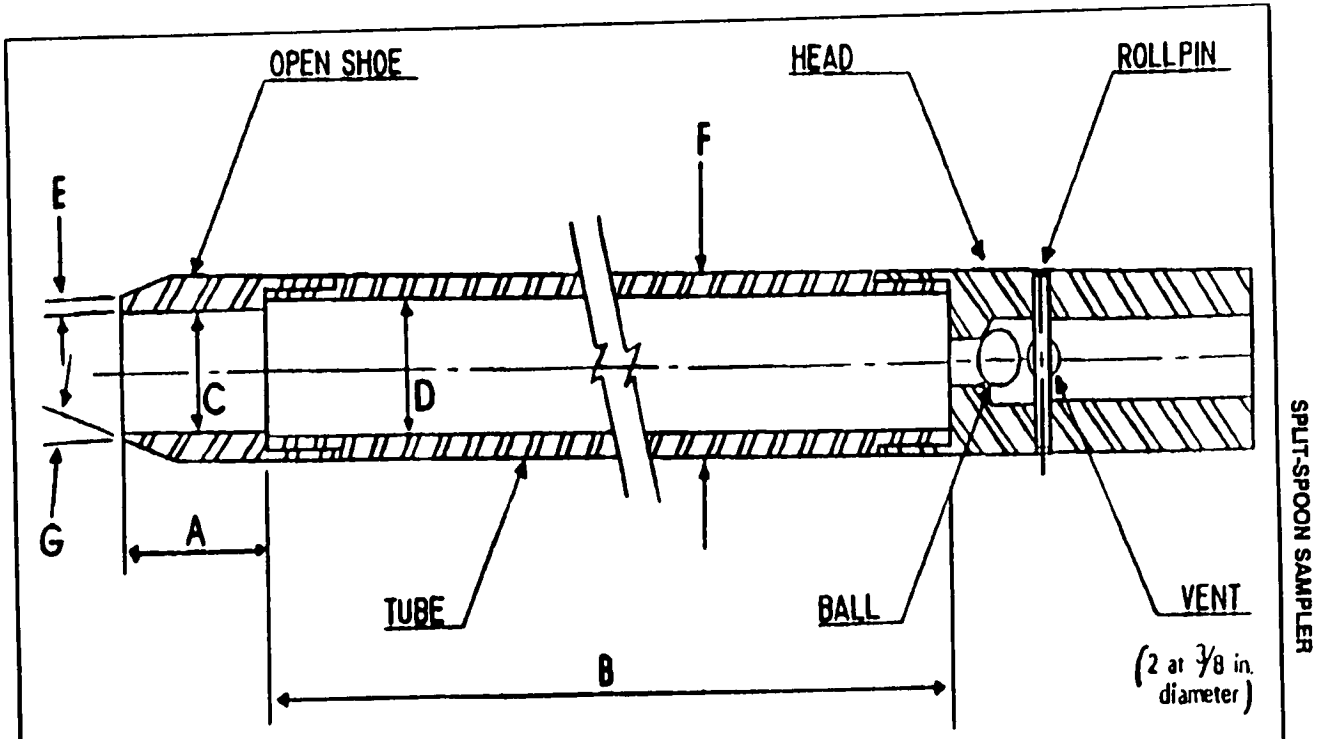

ATTACHMENT A
SPLIT-SPOON SAMPLER

A = 1 0 to 2.0 in. (25 to 50 mm)
B = 18 0 to 30 0 in. (0 457 to 0 762 m)
C = 1 375 ± 0 005 in. (34 93 ± 0 13 mm)
D = 1 50 ± 0 05 – 0 00 in (38 1 ± 1 3 – 0 0 mm)
E = 0 10 ± 0 02 in (2 54 ± 0 25 mm)
F = 2 00 ± 0 05 – 0 00 in. (50 8 ± 1 3 – 0 0 mm)
G = 16.0° to 23 0°

The 1½ in (38 mm) inside diameter split barrel may be used with a 16-gage wall thickness split liner. The penetrating end of the drive shoe may be slightly rounded Metal or plastic retainers may be used to retain soil samples.

ATTACHMENT B
REMOTE SAMPLE HOLDER FOR TEST PIT/TRENCH SAMPLING

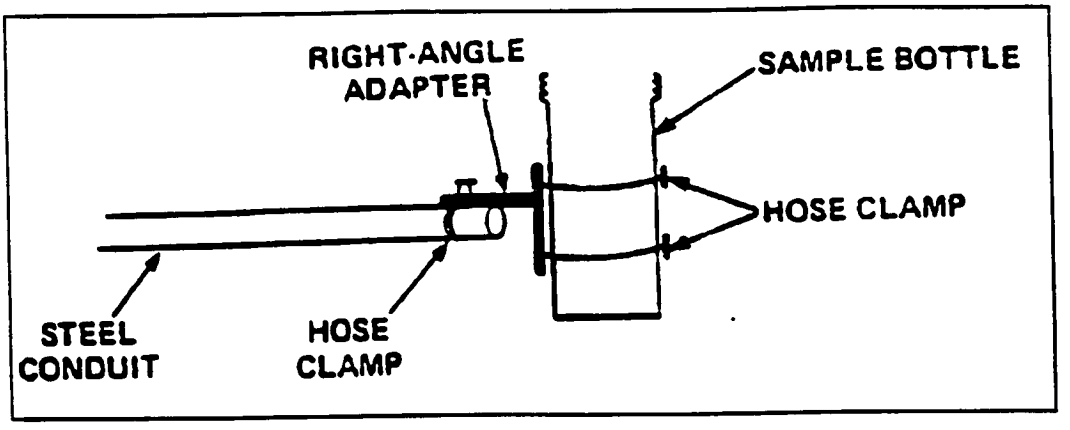

APPENDIX C

FIELD FORMS

Brown & Root Environmental

FIELD MODIFICATION REQUEST

Site Name: _____ Location: _____

CTO Number: _____ Project Number: _____

To: _____ Location: _____ Date: _____

Description: _____

_____

_____

_____

Reason for Change: _____

_____

_____

Field Team Leader Signature: _____ Date: _____

Recommended Action: _____

_____

_____

_____

Navy RPM Signature: _____ Date: _____

Action: _____

_____

_____

_____

Distribution:

		Others as Required:
Program Manager:	_____	
Project Manager:	_____	_____
Quality Assurance Officer:	_____	_____
Field Team Leader:	_____	_____
Project File:	_____	_____

Brown & Root Environmental

SAMPLE LOG SHEET - SOLID PHASE

Site Name: _____

Sample ID: _____

B&R Job No /PMS _____

Replicate/Duplicate No.: _____ (if applicable)

Sample Method: _____

Depth Sampled: _____ feet

Sample Date & Time: ___/___/___ _____ hours Dup _____ hours

Sampler(s): _____

Data Recorded By _____
Signature

TYPE OF SAMPLE: (Check all that apply)

___ Soil
___ Sediment
___ Lagoon/Pond
___ Grab
___ Trip Blank*
___ Rinsate Blank*
___ Field Duplicate collected
___ Other (Specify): _____
(Include sample source & lot no)

Description: (Sand, Clay, Muck, Peat, Dry, Moist, Wet, Etc)

SAMPLE DATA/REMARKS:

ANALYSIS	BOTTLE LOT NO	TEMP (oC)	SPECIFIC CONDUCTIVITY (mmhos/cm)	pH STANDARD UNITS	TURBIDITY NTU	DISSOLVED OXYGEN (mg/L)	SALINITY

B&R FORM 0015

APPENDIX D

SOIL SURVEY MAPS, USDA, SCS

550 000 FEET
555 000 FEET
170 000 FEET
PASSAGE
ISLAND
Lighthouse
(Joins sheet 109)
(Joins sheet 108)
MIDDLETOWN
RHODE
CONRAIL
Lawtons
LAWTON VALLEY
Lawton Valley Reservoir
water
PORTSMOUTH
ST. MARY'S POND
SISSON POND
SLATE HILL
South Portsmouth
MIDDLETOWN
NEWPORT STATE AIRPORT
114
138

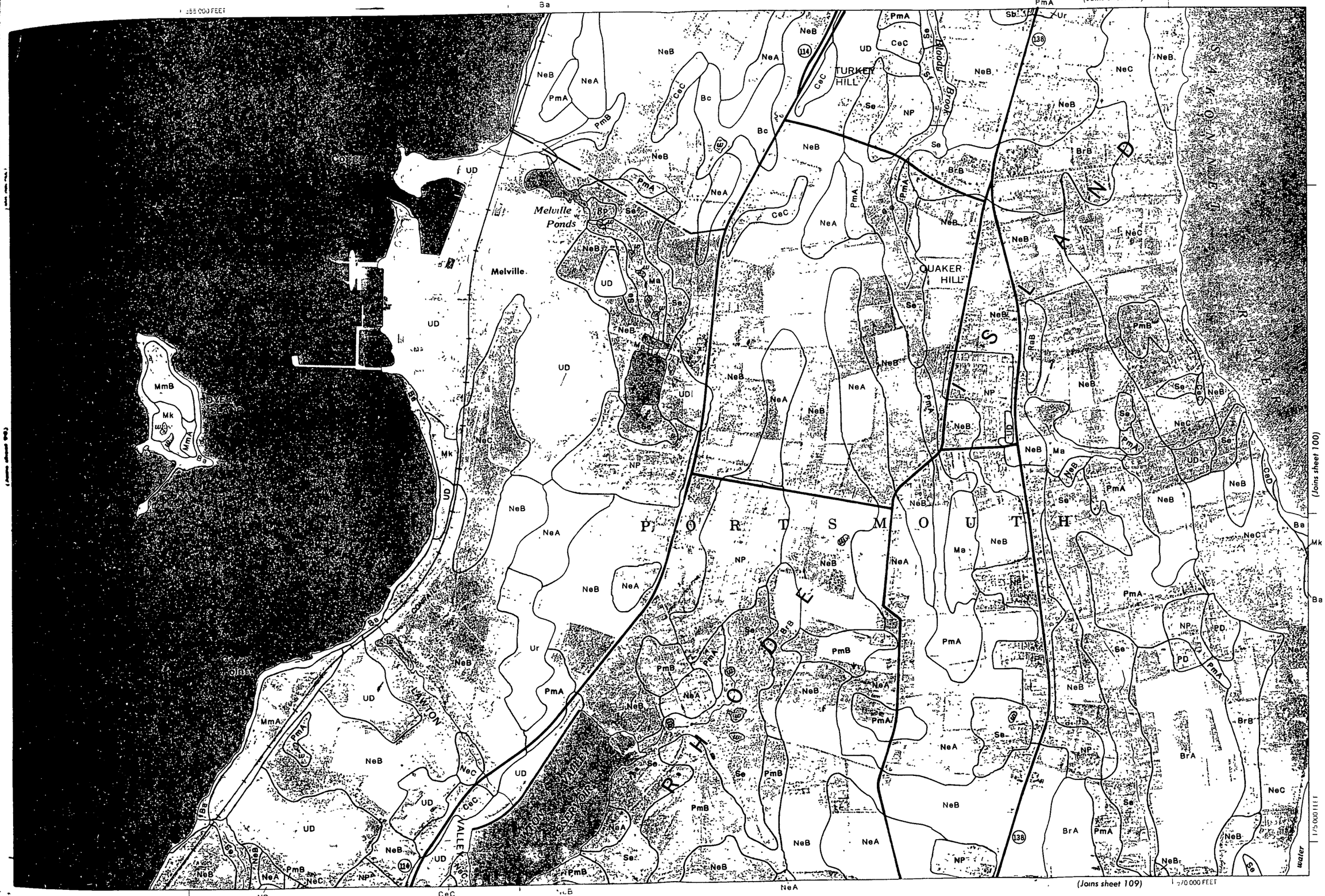
99
N
(Joins sheet 89)
(Joins sheet 100)
(Joins sheet 109)
Melville Ponds
Melville
TURKEY HILL
QUAKER HILL
Bloody Brook
PORTSMOUTH
RHODE ISLAND
SAKONNET RIVER
LAWTON VALLEY
MELVILLE RESERVOIR
DYER ISLAND
1 Mile
5 000 Feet
Scale 1:15 840
1/2 0 1 000 2 000 3 000 4 000 5 000
1/4
3/4
1/2
water