DEPARTMENT OF THE NAVY
NORTHERN DIVISION
NAVAL FACILITIES ENGINEERING COMMAND
OFFICER IN CHARGE OF CONTRACTS
RESIDENT OFFICER IN CHARGE OF CONSTRUCTION
NAVAL ACTIVITIES NARRAGANSETT BAY AREA
ONE SIMONPIETRI DRIVE NETC
NEWPORT RI 02841-1712

IN REPLY REFER TO

R-4:DDD
N62472-93-C-3032,
DO # 0033
March 5, 1996

Director for Public Works
Naval Education & Training Center
One Simonpietri Drive
Newport, RI 02841-1711

CONTRACT N62472-93-C-3032, DO # 0033, MCALLISTER POINT LANDFILL, NETC, NEWPORT, R.I.

Dear Mr. Wheeler:

We are submitting two copies of the Final Closure Plan for Derecktor Shipyard at the request of Mr. Bob Krivinskas, the Remedial Project Manager for the site. If you have any questions or need additional information, please call me at (401) 841-1764.

Sincerely,

David Dorocz

David Dorocz
Project Manager

Copy to:
Naval Education & Training Center, Newport, RI (Attn: Brad Wheeler, Code 40E)
U.S. Environmental Protection Agency, Region 1, Boston, MA (attn: Kymberlee Keckler)
Department of Environmental Management, Division of Site Remediation, Providence, RI (attn: Paul Kulpa)

OHM Remediation Services Corp.
A Subsidiary of OHM Corporation

Naval Station Newport

ELDN 10233

Environmental Protection Department

ACCEPTED BY NAVY AS FINAL CLOSURE REPORT FOR REMEDIAL ACTION DERECKTOR SHIPYARD SAND BLAST GRIT REMOVAL McALLISTER POINT LANDFILL NAVAL EDUCATION AND TRAINING CENTER NEWPORT, RHODE ISLAND

Prepared for:

DEPARTMENT OF THE NAVY
Contract No. N62470-93-D-3032
Northern Division
Naval Facilities Engineering Command
10 Industrial Highway
Mail Stop No. 82
Lester, Pennsylvania 19113-2090

Prepared by:

OHM Remediation Services Corp.
Northern District
88C Elm St.
Hopkinton, MA 01748

Reviewed by:

William L. Snow, P.E.
Project Manager

Justine Whalen
Technical Services Manager

February 2, 1996
Delivery Order 0033
OHM Project 16233WP

TABLE OF CONTENTS

LIST OF TABLES iii

LIST OF FIGURES iv

1.0 INTRODUCTION AND PROJECT BACKGROUND 1

1.1 INTRODUCTION 1
1.2 PROJECT BACKGROUND 1
1.3 PROJECT OBJECTIVES 1

2.0 PRE-EXCAVATION SAMPLING AND ANALYSIS REPORT 2
2.1 Sampling Locations, Excavation Methods, and Test Pit Descriptions 2/3
2.2 Sampling Methods 3
2.3 Analytical Results 3

3.0 DESCRIPTION OF ACTIVITIES 3

3.1 SITE PREPARATION 3
3.1.1 Clearing and Grubbing 3
3.1.2 Surface Water Management And Erosion Controls 4

3.2 SITE EXCAVATION 4
3.2.1 Delineation of Areas/Limits of Removal 4
3.2.2 Soil Excavation 4
3.3.3 Underground Storage Tank (UST) 4
3.2.4 Engineering Controls 5
3.2.5 Backfill and Compaction 5
3.2.6 Equipment Decontamination 5

4.0 SITE RESTORATION
4.1 AREA 1 - SURFACE WATER RUNOFF MANAGEMENT 5
4.2 AREA 2 - SLOPE STABILIZATION AND SUPPORT OF STEAM PIPELINE 5
4.3 AREA 3 - BUILDING 42
4.3.1 Building 42 - Surface Drainage 6
4.3.2 Building 42 - Down Spout Drain System 6

5.0 OPEN COMMITMENTS 6

6.0 DISPOSAL 6

7.0 REFERENCES 6/7

8.0 FINAL REPORT 7

TABLE OF CONTENTS (CONTINUED)

TABLE

FIGURE

APPENDIX A - PRE-EXCAVATION ANALYTICAL RESULTS

APPENDIX B - UST ANALYTICAL RESULTS

LIST OF TABLES

TABLE NO.	TITLE
1	SUMMARY OF (TEST PIT) ANALYTICAL RESULTS
2	SUMMARY OF (UST) ANALYTICAL RESULTS
3	EXCAVATION QUANTITIES

LIST OF FIGURES

FIGURE NO.	TITLE
1	DERECKTOR SHIPYARD SOIL SAMPLING LOCATIONS, INITIAL SITE CONDITIONS, AND SITE EXCAVATION PLAN
2	DEREKTOR SHIPYARD - SITE RESTORATION
3	DEREKTOR SHIPYARD - GABION WALL AND DRAIN PIPE CONSTRUCTION DETAIL

DRAFT CLOSURE REPORT FOR REMEDIAL ACTION

1.0 INTRODUCTION AND PROJECT BACKGROUND

1.1 INTRODUCTION

OHM Remediation Services Corp. (OHM), a wholly owned subsidiary of OHM Corporation, is pleased to submit this draft closure plan to the Department of the Navy (Navy) in response to the modification entitled "Modification No. 002 to Delivery Order 0033," located at the Derecktor Shipyard at the Naval Education Training Center (NETC) in Newport, Rhode Island. The modification was executed per the requirements in the statement of services for Modification No. 002 to Delivery Order 0033and in cooperation with the Navy. This work was also executed in accordance with Naval Facilities Control Plan (NAVFAC) Specification No. 04-93-0295, Cap McAllister Point Landfill, dated May 19, 1995.

1.2 PROJECT BACKGROUND

The Derecktor Shipyard, a 41.35-acre former ship building facility, was leased from the Navy by the Rhode Island Port Authority and subleased to Robert E. Derecktor of Rhode Island who operated the site from 1979 to 1992. Mr. Derecktor filed Chapter 11 bankruptcy in January 1992 and abandoned the property in October of 1992. When the facility was returned to the Navy, a site inspection showed poor housekeeping and inadequate hazardous material/waste management practices. During extent of contamination studies performed by the Navy, the sand blast grit suspected to be contaminated, was discovered adjacent to Building 42.

The Navy began surface cleanup and debris removal while attempting to determine the extent and nature of the contamination. Four samples were collected and analyzed in April 1994 to confirm the characteristics of the sand blast grit. The analysis showed elevated levels of chromium, copper, lead, nickel, and zinc. A preliminary site screening investigation conducted in December 1994 by TRC Environmental Corporation revealed contaminated sand blast grit was used as fill material adjacent to Building 42 at the site. Building 42 is located in the west central portion of the shipyard, approximately 50 feet from the Coddington Cove waterfront along Narragansett Bay. Sand blast grit was detected on the north and east sides of Building 42. (Figure 1)

1.3 PROJECT OBJECTIVES

The objectives for the removal action of the sand blast grit material included:

- Delineation and characterization of waste
- Removal and consolidation of fill and sand blast grit waste
- Loading and hauling of sand blast grit waste to McAllister Point Landfill for final disposal
- Performance of pre- and post-surveying for waste excavation quantity determination
- Restoration of excavated areas as needed to promote drainage and provide for proposed site use
- Preparation of a final report.

2.0 PRE-EXCAVATION SAMPLING AND ANALYSIS REPORT

The following sampling program, which occurred on July 6 and 7, 1995, was performed by OHM to identify and characterize the limits of the sand blast grit adjacent to Building 42 at the Derecktor Shipyard site.

2.1 Sampling Locations, Excavation Methods, and Test Pit Descriptions

Three areas adjacent to the Derecktor Shipyard were delineated and sampled by OHM as shown on Figure 1 - "Derecktor Shipyard Soil Sampling Locations, Initial Site Conditions, and Site Excavation Plan." Sampling areas were identified as "Area 1," "Area 2," and "Area 3" as shown on Figure 1. All locations, except Test Pits A2-8, A2-9, and A2-10, were located in the original locations proposed by NORTHDIV. Test Pits A2-8, A2-9, and A2-10 were relocated slightly as shown due to access problems and the location of existing steam pipes and overhead utility lines. Sample points were located to adequately characterize the areas of sand blast grid to the east and north of Building 42 and the "berm" area to the east of Building 42. Samples were collected from the last excavated bucket of each test pit. Material in the buckets consisted of grit from the bottom and grit from the sides which sloughed in from the sides. This hybrid sample collection method was deemed as adequate representation of the material in each pit.

OHM used a Case 580 backhoe to excavate the test pits in all three areas. OHM followed the depths given in Modification No. 002 project description provided to OHM by the Navy. The test pits in Area 1 were excavated to approximately a 2-foot depth until apparently "clean" material was observed and test pits in Area 3 were excavated to approximately a 4- to 4½-foot depth until apparently "clean" material was observed as per the estimates of depth of grid expected in these areas and presented in Modification No. 2. Test pits in Area 2 were excavated to an approximate depth of 10 to 12 feet. The following provides a brief interpretation of the stratification encountered in each of the ten test pits excavated in Area 2:

- Test Pit A2-1: From 0- to 9-foot depth--a mix of fill and sand blast grit and a small amount of demolition waste. From 9- to 9½-foot depth--hard gray shale or other apparently hard, natural surface (backhoe refusal encountered at approximately a 9½-foot depth.

- Test Pit A2-2: From 0- to 12-foot depth--a mix of fill, waste, and sand blast grit; noticed initial strong petroleum-like smell that later dissipated and a rusted metal drum, which apparently contained pure sand blast grit or other black/sand-like material. Refusal was not encountered--reach of backhoe only extends to approximately 12 feet. Bottom of excavation is soft--indicating fill/waste and/or sand blast grit may still be present at this depth.

- Test Pit A2-3: From 0- to 4-foot depth--a mix of fill and sand blast grid. From 4- to 10-foot depth--gray fill material (backhoe refusal encountered at approximately a 10-foot depth).

- Test Pit A2-4: From 0- to 10-foot depth--a mix of fill and sand blast grid and a small amount of demolition waste. From 10 to 10½-foot depth--hard gray shale or other apparently hard, natural surface (backhoe refusal encountered at approximately a 10½-foot depth).

- Test Pit A2-5: From 0- to 5-foot depth--a mix of fill and sand blast grid. From 5- to 11-foot depth--gray fill material (backhoe refusal encountered at approximately an 11-foot depth).

2.1 Sampling Locations, Excavation Methods, and Test Pit Descriptions, continued

- Test Pit A2-6: From 0- to 12-foot depth--a mix of fill and mostly sand blast grid. Refusal was not encountered.

- Test Pits A2-7, -8, -9, and -10: From 0- to 4½-foot depth--a mix of fill and sand blast grit. From 4½- to 10- or 11-foot depth--gray fill material (backhoe refusal encountered at approximately a 10- to 11-foot depth).

2.2 Sampling Methods

The sampling methods, frequencies and locations were prescribed in the Field Sampling Plan (6/16/95) given to OHM by the Navy (see Section 7.0 - References).

Ten grab samples were collected in Area 2 for Total Petroleum Hydrocarbons (TPH), polychlorinated biphenyls (PCBs), Total Lead, Toxicity Characteristic Leachate Procedure (TCLP) semivolatile organic compounds (SVOCs), TCLP Metals, and TCLP volatile organic compounds (VOCs). Eight samples were collected from Area 1 and composited in pairs for a total of four samples. Similarly, 12 samples were collected from Area 3 and composited in pairs for a total of 6 samples. The laboratory performing the analysis was NYTEST Environmental Labs located in Port Washington, New York. Soil for TPH, PCBs, Total Lead, TCLP SVOCs, and TCLP Metals were stored in 8-ounce glass jars and soil for TCLP VOCs was stored in two 40-milliliter glass vials. Samples were stored in ice coolers at 4 degrees Celsius prior to and during shipping. Samples collected were taken from the middle of the backhoe bucket using a stainless-steel spatula. Samples collected for VOCs were collected first from each test pit. The remainder of the sample was homogenized in a stainless-steel bowl for the balance of chemical analysis.

2.3 Analytical Results

Based on TCLP analytical results summarized in Table 1 - "Summary of Analytical Results" and Appendix B - "Original Analytical Results," none of the material in any of the three areas is categorizd as RCRA regulated. Sample A2-2 had TPH (as No. 2 fuel oil) at 19,000 ppm which is greater than 500 ppm as listed in RIDEM standards. Sample A2-9 had Total Lead at 3,800 ppm which is greater than 1,000 ppm as listed in RIDEM regulations. Both RIDEM regulated material and non-regulated grit will be disposed of in McAllister Landfill prior to final capping.

3.0 DESCRIPTION OF ACTIVITIES

3.1 SITE PREPARATION

The following sections describe the work performed by OHM prior to intrusive activities.

3.1.1 Clearing and Grubbing

Only sparse vegetation existed in the areas of excavation. In general, vegetation was removed during the course of excavation and combined with excavated materials for consolidation under the landfill's cap.

3.1.2 Surface Water Management and Erosion Controls

Although applied for, a Coastal Resource Management Council Permit was waived by the Council thereby eliminating construction of storm water and erosion control measures as identified in the work plan.

3.2 SITE EXCAVATION

3.2.1 Delineation of Areas and Limits of Removal

An initial site topographic survey was performed to establish existing conditions, establish limits of removal, and to track excavation and backfill quantities upon completion of work in each area. This survey was the basis of the operations work plan.

3.2.2 Soil Excavation

Based on the pre-excavation test pit study, it was estimated that 12,000 cubic yards of contaminated material would require removal from Areas 1-3, cumulatively. The bulk of this material consists of sand blast grit. A minor percentage of the soils were impacted by Total Petroleum Hydrocarbon (TPH) contaminant and Total Lead above RIDEM (Rhode Island Department of Environmental Management) regulated levels. At completion, it was estimated that a total of 25,000 tons were excavated and consolidated under the landfill cap. Utilizing a weight conversion factor of 1.5x, the investigation-derived estimate and final estimate are 12,000 and 16,600 cubic yards, respectively.

Contaminated material was excavated and loaded directly into ten-wheel dump trucks utilizing a dozer and tracked excavator in tandem. The dump trucks then proceeded along Defense Highway, weighed prior to off loading and then returned to the shipyard via the Defense Highway. On average, approximately 1000 cubic yards were excavated per day. Hand work was employed as needed around the steam pipeline, utilities and other structures. The approximate limits of excavation are identified on Figure No.1.

Budgetary constraints were imposed on this Supplemental Environmental Project (SEP) which may have precluded removal of all contaminated material in favor of site restoration activities. However, accelerated production rates facilitated a complete excavation. Excavation terminated when clean native soils were encountered and when the removal of all contaminated material could be visually confirmed by the Contracting Officer (CO). Confirmatory sampling was not conducted due to the distinct physical and visual characteristics of the material.

3.2.3 Underground Storage Tank

During the course of excavation, an underground storage tank was exposed. The tank is located approximately 30 feet east of the southeast corner of Building 42 (refer to Figure No.1). One grab sample was collected on October 25, 1995 and submitted to Environmental Science Services (Providence, Rhode Island) for analysis of Total Petroleum Hydrocarbons (TPH), Toxicity Characteristic Leachate Procedure (TCLP) semivolatile organic compounds (SVOCs), TCLP metals and TCLP volatile organic compounds (VOCs). As summarized in Table 2, all analytes were reported below the Method Reporting Limit (MRL). Based on the analytical results it is assumed that the tank's contents were probably not fuel residuals, and were more similar to characteristics of surface water that has infiltrated since groundwater is not present at this depth. .

3.2.4 Engineering Controls

In general, the requirements of the Site-Specific Health and Safety Plan dated June 23, 1995, for the McAllister Point Landfill project were applied to the Derecktor project.

OHM personnel worked in Level D personal protection equipment (PPE) for all aspects of the remediation. Level D PPE included protective eye glasses, hardhat, and steel-toed work boots. Real-time air monitoring in excavations was conducted with instrumentation including aerosol monitors, ambient air sampler, and a photo ionization detector in accordance with Section 7.0 of the Site-Specific Health and Safety Plan (SSHSP). Water spraying was effectively utilized to contain fugitive dust emissions during the course of excavation and help sustain a down-graded level of personal protection.

3.2.5 Backfill and Compaction

Only Area 3 was backfilled and to that extent only to approximately 2 feet below original grade. Minor grading was performed beyond the toe of Area 2 to promote positive drainage and avoid ponding.

Final grading and restoration measures are discussed below in Section 4.0.

3.2.6 Equipment Decontamination

Dry decontamination procedures such as sweeping, wiping etc. were employed to clean haul vehicles and heavy equipment during the excavation and prior to leaving the site. This procedure was sufficient in maintaining site control and averted costly construction of an equipment decontamination pad.

4.0 SITE RESTORATION

Goals of the final restoration plan included slope protection, slope stabilization and surface water runoff management within Area 2 and Areas 1/3, respectively.

4.1 AREA 1 - SURFACE WATER RUNOFF MANAGEMENT

Although the restoration plan called for limited grading (see proposed contours, Figure R-1) in Area 1 to promote runoff towards the existing catch basin, OHM was later instructed not to backfill Area 1 due to future remedial investigation to be performed by others. Post-excavation topography does provide for adequate runoff to the existing catch basin, therefore no additional grading is planned for Area 1.

4.2 AREA 2 - SLOPE STABILIZATION AND SUPPORT OF STEAM PIPELINE

Excavation of contaminated material from Area 2 severely compromised the pipeline's structural supports. Accordingly, the Navy approved slope protection and stabilization measures consisting of a stone packed slope face and gabion retaining wall, respectively. The wall was aligned to maintain use of the existing catch basins which now remain active in collecting surface runoff from the surrounding area. The backfill behind the wall consists of 1-2 inch stone, underlain by an 8 ounce per square yard, non-woven geotextile. Figure No.3 (Drawing R-2, Sections A and B) provides cross sectional detail of the gabion retaining wall system. A gravel berm was installed at the top of the slope to anchor the geotextile and to act as a barrier for surface water run-on originating from the roadway to the east of the existing steam pipeline (roadway not shown on figure).

4.3 AREA 3 - BUILDING 42

4.3.1 Building 42 - Surface Drainage

As shown on Figure R-2, a 6-inch layer of 1-2 inch gravel was placed at a 3 percent slope on the east side of the building towards the existing catch basins. This grading and the existing asphalt pavement (exposed during excavation) will aid in the collection of surface water runoff from rain events and Building 42's in-place down spout system. Section C of Drawing R-2 (Figure No.3) provides cross sectional detail of the grading.

An additional runoff control measure was taken for Building 42 and is described in the next section.

4.3.2 Building 42 - Down Spout Drain System

Normally, Building 42's down spout system discharges to ground surface on the east side of the building with runoff flowing across Areas 2 and 3. In addition to the area grading described above, a trench drain was installed to help convey storm water runoff to existing water control structures. Section C and Details 1and 2 of Drawing R-2 (Figure No.3) provide cross sectional detail of the installation of the trench drain.

5.0 OPEN COMMITMENTS

As noted in Section 4.1, Area 1 was not backfilled and graded to the originally proposed contours. To that extent, OHM respectfully requests direction from the Navy.

Figure No.2, Drawing R-1 depicts a stockpile of excavation residuals from the installation of the gabion wall and trench drain. OHM respectfully requests direction from the Navy.

The remedial action is otherwise complete with the exception of the final (as-built) site survey which is tentatively scheduled for the Spring of 1996. Should the Navy elect not to proceed with the final survey, the final closure report will be issued pursuant to assimilation of changes to the draft report.

6.0 DISPOSAL

In accordance with the work plan, all excavated material was transported to the McAllister Point Landfill for consolidation under the landfill cap with the exception of several yards of clean scrap metal which was sent off site for recycling.

No other waste was excavated nor generated in the course of the remedial action.

7.0 REFERENCES

The following is a summary of record documents:

05/23/95: MODIFICATION NO.002 TO DELIVERY ORDER 0033

06/16/95: FIELD SAMPLING PLAN FOR SAND BLAST GRIT REMOVAL AT DERECKTOR SHIPYARD

7.0 REFERENCES, continued

09/29/95: FINAL OPERATIONS WORK PLAN FOR REMEDIAL ACTION
DERECKTOR SHIPYARD SAND BLAST GRIT REMOVAL

10/20/95: SITE RESTORATION OF DERECKTOR SHIPYARD

8.0 FINAL REPORT

OHM respectfully requests direction from the Navy regarding the final survey and release of the final closure report. The final closure report will be issued to the Navy and RIDEM within 15 days of receiving comments from the Navy on the draft report.

TABLE NO.1 - SUMMARY OF TEST PIT ANALYTICAL RESULTS

* Units of Measure for data expressed in Table 1:

- All TCLP data - mg/l
- All PCB data - mg/kg
- All TPH data - mg/kg

TABLE 1-SUMMARY OF RESULTS
McALLISTER LANDFILL-Mod 2
Derecktor Shipyard Site
OHM Project No. 16233

Sample I.D.	A1-1	A1-2	A1-3	A1-4	A2-1	A2-2	A2-3
Lab I.D.	2435302	2435303	2435304	2435305	2435311	2435312	2435313
Matrix	SOIL	SOIL	SOIL	SOIL	SOIL	SOIL	SOIL
Sample Data	7/6/95	7/6/95	7/6/95	7/6/95	7/6/95	7/6/95	7/6/95
TCLP Volatiles							
Benzene	ND@0.05	ND@0.05	ND@0.05	ND@0.05	ND@0.05	ND@0.05	ND@0.05
Carbon tetrachloride	ND@0.05	ND@0.05	ND@0.05	ND@0.05	ND@0.05	ND@0.05	ND@0.05
Chlorobenzene	ND@0.05	ND@0.05	ND@0.05	ND@0.05	ND@0.05	ND@0.05	ND@0.05
Chloroform	ND@0.05	ND@0.05	ND@0.05	ND@0.05	ND@0.05	ND@0.05	ND@0.05
1,2 Dichloroethane	ND@0.05	ND@0.05	ND@0.05	ND@0.05	ND@0.05	ND@0.05	ND@0.05
1,1 Dichloroethylene	ND@0.05	ND@0.05	ND@0.05	ND@0.05	ND@0.05	ND@0.05	ND@0.05
Methyl ethyl ketone	ND@0.05	ND@0.05	ND@0.05	ND@0.05	ND@0.05	ND@0.05	ND@0.05
Tetrachloroethylene	ND@0.05	ND@0.05	ND@0.05	ND@0.05	ND@0.05	ND@0.05	ND@0.05
Trichloroethylene	ND@0.05	ND@0.05	ND@0.05	ND@0.05	ND@0.05	ND@0.05	ND@0.05
Vinyl chloride	ND@0.05	ND@0.05	ND@0.05	ND@0.05	ND@0.05	ND@0.05	ND@0.05
TCLP Semi Volatiles							
O Cresol	ND@0.04	ND@0.04	ND@0.04	ND@0.04	ND@0.04	ND@0.04	ND@0.04
M,P Cresol	ND@0.08	ND@0.08	ND@0.08	ND@0.08	ND@0.08	ND@0.08	ND@0.08
1,4 Dichlorobenzene	ND@0.04	ND@0.04	ND@0.04	ND@0.04	ND@0.04	ND@0.04	ND@0.04
Hexachloroethane	ND@0.04	ND@0.04	ND@0.04	ND@0.04	ND@0.04	ND@0.04	ND@0.04
Hexachlorobenzene	ND@0.04	ND@0.04	ND@0.04	ND@0.04	ND@0.04	ND@0.04	ND@0.04
Hexachlorobutadiene	ND@0.04	ND@0.04	ND@0.04	ND@0.04	ND@0.04	ND@0.04	ND@0.04
Nitrobenzene	ND@0.04	ND@0.04	ND@0.04	ND@0.04	ND@0.04	ND@0.04	ND@0.04
Pentachlorophenol	ND@0.20	ND@0.20	ND@0.20	ND@0.20	ND@0.20	ND@0.20	ND@0.20
Pyridine	ND@0.04	ND@0.04	ND@0.04	ND@0.04	ND@0.04	ND@0.04	ND@0.04
2,4 Dinitrotoluene	ND@0.04	ND@0.04	ND@0.04	ND@0.04	ND@0.04	ND@0.04	ND@0.04
2,4,5 Trichlorophenol	ND@0.04	ND@0.04	ND@0.04	ND@0.04	ND@0.04	ND@0.04	ND@0.04
2,4,8 Trichlorophenol	ND@0.04	ND@0.04	ND@0.04	ND@0.04	ND@0.04	ND@0.04	ND@0.04
TCLP Metals							
Arsenic	ND@0.056	ND@0.056	ND@0.056	ND@0.056	ND@0.056	0.091	ND@0.056
Barium	0.96	0.99	1.5	0.94	0.75	0.91	0.54
Cadmium	0.013	0.0094	0.032	0.01	0.0079	0.0095	0.034
Chromium	0.018	0.019	0.01	0.0087	ND@0.0081	ND@0.0081	0.015
Lead	0.46	0.34	1.5	0.98	0.46	0.079	0.13
Mercury	ND@0.00020	ND@0.00020	ND@0.00020	ND@0.00020	ND@0.00020	0.0059	ND@0.00020
Selenium	ND@0.087	ND@0.087	ND@0.087	ND@0.087	ND@0.087	ND@0.087	ND@0.087
Silver	ND@0.0068	ND@0.0068	ND@0.0068	ND@0.0068	ND@0.0068	ND@0.0068	ND@0.0068
Others							
PCBs (Aroclor 1260)	0.9	ND@1.1	ND@1.1	ND@1.1	ND@1.1	ND@1.1	ND@1.1
PCBs (Each, other Aroclors)	ND@1.1	ND@1.1	ND@1.1	ND@1.1	ND@1.1	ND@1.1	ND@1.1
Total Lead	387	171	484	242	268	371	128
TPH Gas Range	ND@0.5	ND@0.5	ND@0.5	ND@0.5	ND@0.5	ND@0.5	ND@0.5
TPH Diesal (Fuel Oil #2)	230	160	180	150	220	19,000	73
TPH Diesal (all other)	ND@0.11	ND@0.11	ND@0.11	ND@0.11	ND@0.11	ND@0.11	ND@0.11

TABLE 1-SUMMARY OF RESULTS
McALLISTER LANDFILL-Mod 2
Derecktor Shipyard Site
OHM Project No. 16233

Sample I.D.	A2-4	A2-5	A2-6	A2-7	A2-8	A2-9	A2-10
Lab I.D.	2435314	2435315	2435316	2435317	2435318	2435319	2435320
Matrix	SOIL	SOIL	SOIL	SOIL	SOIL	SOIL	SOIL
Sample Data	7/6/95	7/6/95	7/6/95	7/6/95	7/6/95	7/6/95	7/6/95
TCLP Volatiles							
enzene	ND@0.05	ND@0.05	ND@0.05	ND@0.05	ND@0.05	ND@0.05	ND@0.05
Carbon tetrachloride	ND@0.05	ND@0.05	ND@0.05	ND@0.05	ND@0.05	ND@0.05	ND@0.05
Chlorobenzene	ND@0.05	ND@0.05	ND@0.05	ND@0.05	ND@0.05	ND@0.05	ND@0.05
hloroform	ND@0.05	ND@0.05	ND@0.05	ND@0.05	ND@0.05	ND@0.05	ND@0.05
-,2 Dichloroethane	ND@0.05	ND@0.05	ND@0.05	ND@0.05	ND@0.05	ND@0.05	ND@0.05
1,1 Dichloroethylene	ND@0.05	ND@0.05	ND@0.05	ND@0.05	ND@0.05	ND@0.05	ND@0.05
Methyl ethyl ketone	ND@0.05	ND@0.05	ND@0.05	ND@0.05	ND@0.05	ND@0.05	ND@0.05
etrachloroethylene	ND@0.05	ND@0.05	ND@0.05	ND@0.05	ND@0.05	ND@0.05	ND@0.05
Trichloroethylene	ND@0.05	ND@0.05	ND@0.05	ND@0.05	ND@0.05	ND@0.05	ND@0.05
Vinyl chloride	ND@0.05	ND@0.05	ND@0.05	ND@0.05	ND@0.05	ND@0.05	ND@0.05
TCLP Semi Volatiles							
O Cresol	ND@0.04	ND@0.04	ND@0.04	ND@0.04	ND@0.04	ND@0.04	ND@0.04
M,P Cresol	ND@0.08	ND@0.08	ND@0.08	ND@0.08	ND@0.08	ND@0.08	ND@0.08
1,4 Dichlorobenzene	ND@0.04	ND@0.04	ND@0.04	ND@0.04	ND@0.04	ND@0.04	ND@0.04
Hexachloroethane	ND@0.04	ND@0.04	ND@0.04	ND@0.04	ND@0.04	ND@0.04	ND@0.04
Hexachlorobenzene	ND@0.04	ND@0.04	ND@0.04	ND@0.04	ND@0.04	ND@0.04	ND@0.04
Hexachlorobutadiene	ND@0.04	ND@0.04	ND@0.04	ND@0.04	ND@0.04	ND@0.04	ND@0.04
Nitrobenzene	ND@0.04	ND@0.04	ND@0.04	ND@0.04	ND@0.04	ND@0.04	ND@0.04
Pentachlorophenol	ND@0.20	ND@0.20	ND@0.20	ND@0.20	ND@0.20	ND@0.20	ND@0.20
Pyridine	ND@0.04	ND@0.04	ND@0.04	ND@0.04	ND@0.04	ND@0.04	ND@0.04
2,4 Dinitrotoluene	ND@0.04	ND@0.04	ND@0.04	ND@0.04	ND@0.04	ND@0.04	ND@0.04
2,4,5 Trichlorophenol	ND@0.04	ND@0.04	ND@0.04	ND@0.04	ND@0.04	ND@0.04	ND@0.04
2,4,8 Trichlorophenol	ND@0.04	ND@0.04	ND@0.04	ND@0.04	ND@0.04	ND@0.04	ND@0.04
TCLP Metals							
Arsenic	ND@0.056	ND@0.056	ND@0.056	ND@0.056	ND@0.056	ND@0.056	ND@0.056
Barium	0.96	0.39	0.49	1.1	0.44	0.6	0.42
Cadmium	ND@0.0050	ND@0.0050	ND@0.0050	ND@0.0050	ND@0.0050	ND@0.0050	ND@0.0050
Chromium	0.052	ND@0.0081	ND@0.0081	0.027	ND@0.0081	ND@0.0081	ND@0.0081
Lead	0.62	0.051	0.11	0.16	ND@0.046	0.13	0.38
Mercury	ND@0.00020	ND@0.00020	ND@0.00020	ND@0.0002	ND@0.00020	ND@0.00020	ND@0.00020
Selenium	ND@0.087	ND@0.087	ND@0.087	ND@0.087	ND@0.087	ND@0.087	ND@0.087
Silver	ND@0.0068	ND@0.0068	ND@0.0068	ND@0.0068	ND@0.0068	ND@0.0068	ND@0.0068
Others							
PCBs (Aroclor 1260)	ND@1.1	ND@1.1	ND@1.1	ND@1.1	ND@1.1	ND@1.1	ND@1.1
PCBs (Each, other Aroclors)	ND@1.1	ND@1.1	ND@1.1	ND@1.1	ND@1.1	ND@1.1	ND@1.1
Total Lead	268	34.1	198	118	40.2	3800	580
TPH Gas Range	ND@0.5	ND@0.5	ND@0.5	ND@0.5	ND@0.5	ND@0.5	ND@0.5
TPH Diesal (Fuel Oil #2)	190	ND@11	ND@11	ND@11	ND@11	72	11
TPH Diesal (all other)	2.8	ND@0.11	ND@0.11	ND@0.11	ND@0.11	ND@0.11	ND@0.11

TABLE 1-SUMMARY OF RESULTS
McALLISTER LANDFILL-Mod 2
Derecktor Shipyard Site
OHM Project No. 16233

Sample I.D.	A3-1	A3-2	A3-3	A3-4	A3-5	A3-6
Lab I.D.	2435306	2435307	2435308	2435309	2435310	2435301
Matrix	SOIL	SOIL	SOIL	SOIL	SOIL	SOIL
Sample Data	7/6/95	7/6/95	7/6/95	7/6/95	7/6/95	7/6/95
TCLP Volatiles						
Benzene	ND@0.05	ND@0.05	ND@0.05	ND@0.05	ND@0.05	ND@0.05
Carbon tetrachloride	ND@0.05	ND@0.05	ND@0.05	ND@0.05	ND@0.05	ND@0.05
Chlorobenzene	ND@0.05	ND@0.05	ND@0.05	ND@0.05	ND@0.05	ND@0.05
Chloroform	ND@0.05	ND@0.05	ND@0.05	ND@0.05	ND@0.05	ND@0.05
1,2 Dichloroethane	ND@0.05	ND@0.05	ND@0.05	ND@0.05	ND@0.05	ND@0.05
1,1 Dichloroethylene	ND@0.05	ND@0.05	ND@0.05	ND@0.05	ND@0.05	ND@0.05
Methyl ethyl ketone	ND@0.05	ND@0.05	ND@0.05	ND@0.05	ND@0.05	ND@0.05
Tetrachloroethylene	ND@0.05	ND@0.05	ND@0.05	ND@0.05	ND@0.05	ND@0.05
Trichloroethylene	ND@0.05	ND@0.05	ND@0.05	ND@0.05	ND@0.05	ND@0.05
Vinyl chloride	ND@0.05	ND@0.05	ND@0.05	ND@0.05	ND@0.05	ND@0.05
TCLP Semi Volatiles						
O Cresol	ND@0.04	ND@0.04	ND@0.04	ND@0.04	ND@0.04	ND@0.04
M,P Cresol	ND@0.08	ND@0.08	ND@0.08	ND@0.08	ND@0.08	ND@0.08
1,4 Dichlorobenzene	ND@0.04	ND@0.04	ND@0.04	ND@0.04	ND@0.04	ND@0.04
Hexachloroethane	ND@0.04	ND@0.04	ND@0.04	ND@0.04	ND@0.04	ND@0.04
Hexachlorobenzene	ND@0.04	ND@0.04	ND@0.04	ND@0.04	ND@0.04	ND@0.04
Hexachlorobutadiene	ND@0.04	ND@0.04	ND@0.04	ND@0.04	ND@0.04	ND@0.04
Nitrobenzene	ND@0.04	ND@0.04	ND@0.04	ND@0.04	ND@0.04	ND@0.04
Pentachlorophenol	ND@0.20	ND@0.20	ND@0.20	ND@0.20	ND@0.20	ND@0.20
Pyridine	ND@0.04	ND@0.04	ND@0.04	ND@0.04	ND@0.04	ND@0.04
2,4 Dinitrotoluene	ND@0.04	ND@0.04	ND@0.04	ND@0.04	ND@0.04	ND@0.04
2,4,5 Trichlorophenol	ND@0.04	ND@0.04	ND@0.04	ND@0.04	ND@0.04	ND@0.04
2,4,8 Trichlorophenol	ND@0.04	ND@0.04	ND@0.04	ND@0.04	ND@0.04	ND@0.04
TCLP Metals						
Arsenic	ND@0.056	ND@0.056	ND@0.056	ND@0.056	ND@0.056	ND@0.056
Barium	0.68	0.94	1.3	1.3	1.4	0.45
Cadmium	0.0089	0.0083	0.0094	0.013	0.013	ND@0.0050
Chromium	0.022	0.012	0.022	0.051	0.083	ND@0.0081
Lead	0.92	0.43	0.91	1.2	0.6	0.048
Mercury	ND@0.00020	ND@0.00020	ND@0.00020	ND@0.00020	ND@0.00020	ND@0.00020
Selenium	ND@0.087	ND@0.087	ND@0.087	ND@0.087	ND@0.087	0.1
Silver	ND@0.0068	ND@0.0068	ND@0.0068	ND@0.0068	ND@0.0068	ND@0.0068
Others						
PCBs (Aroclor 1260)	ND@1.1	0.5	ND@1.1	ND@1.1	ND@1.1	ND@1.1
PCBs (Each, other Aroclors)	ND@1.1	ND@1.1	ND@1.1	ND@1.1	ND@1.1	ND@1.1
Total Lead	256	328	205	225	173	86.3
TPH Gas Range	ND@0.5	ND@0.5	ND@0.5	ND@0.5	ND@0.5	ND@0.5
TPH Diesal (Fuel Oil #2)	300	250	220	200	220	ND@11
TPH Diesal (all other)	ND@0.11	ND@0.11	0.1	0.07	0.63	ND@0.11

TABLE NO.2 - SUMMARY OF UNDERGROUND STORAGE TANK ANALYTICAL RESULTS

Parameter	Results	Units	Method
Toxicity Characteristic Leachate Procedure			
Volatile Organics	ND	mg/l	8260
Semivolatile Organics	ND	mg/l	8270
Metals	ND	mg/l	6010
Total Petroleum Hydrocarbon			
Gasoline Range	ND	mg/l	8015M
Diesel Range	ND	mg/l	D3328-78

ND = Not Detected above Method Reporting Limit (MRL)

TABLE NO. 3 - EXCAVATION QUANTITIES

DERECKTOR SHIPYARD SAND BLAST GRIT REMOVAL
MCALLISTER POINT LANDFILL

EXCAVATION QUANTITIES

DATE		DAILY QTY. EXCAVATED (tons)		CUMULATIVE (tons)
28-Aug		1238.9		1238.9
29-Aug		1007.4		2246.4
30-Aug		1590.4		3836.7
31-Aug		1823.0		5659.7
06-Sep		1085.5		6745.2
07-Sep		1671.9		8417.1
08-Sep		1704.2		10121.3
11-Sep		1488.8		11610.1
12-Sep		1556.1		13166.2
13-Sep		1506.5		14672.7
14-Sep		1454.4		16127.2
15-Sep		0.0		16127.2
18-Sep		1379.0		17506.2
19-Sep		1556.1		19062.3
20-Sep		1136.4		20198.7
21-Sep		1002.0		21200.7
22-Sep		0.0		21200.7
25-Sep		1185.4		22386.1
26-Sep		573.7		22959.8
27-Sep		1227.1		24186.9
28-Sep		764.1		24951.0

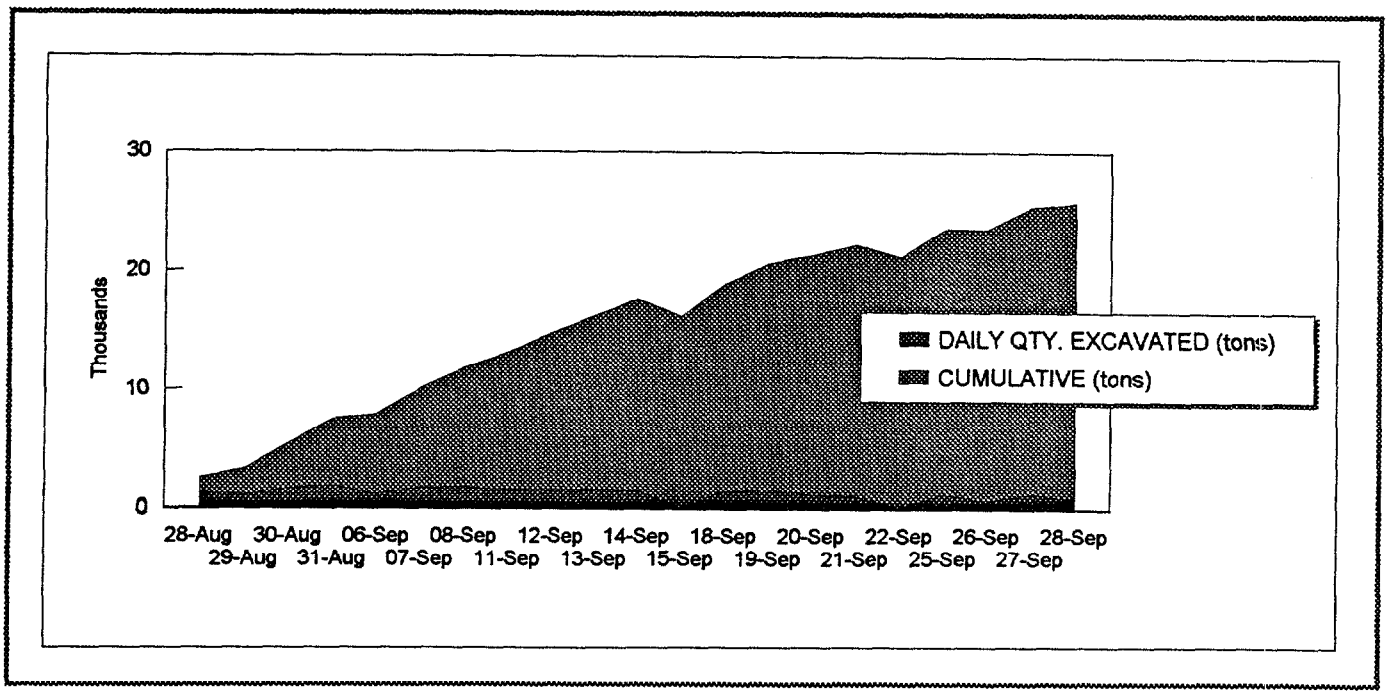

FIGURE NO. 1 **DERECKTOR SHIPYARD SOIL SAMPLING LOCATIONS, INITIAL SITE CONDITIONS, AND SITE EXCAVATION PLAN**

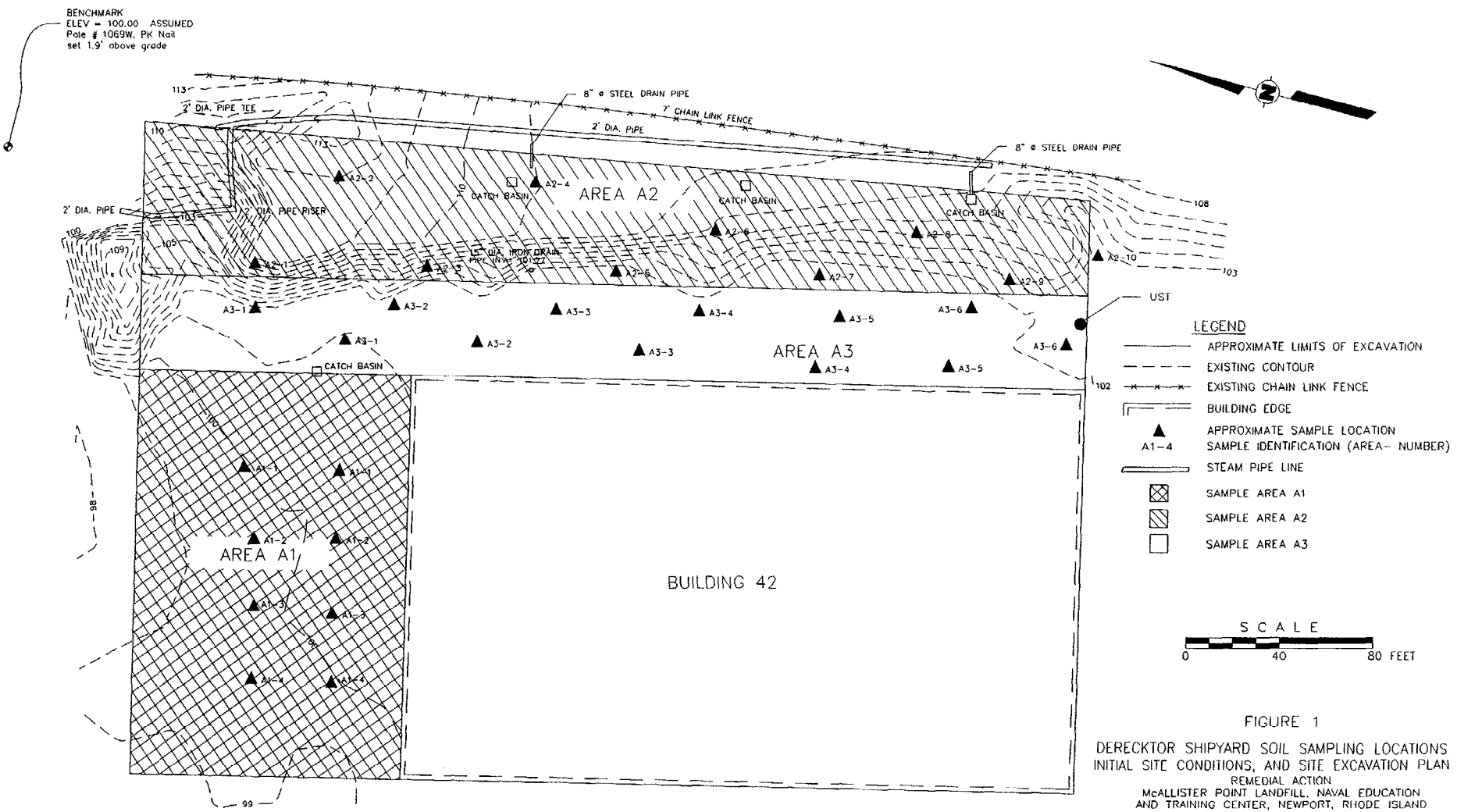

FIGURE 1

DERECKTOR SHIPYARD SOIL SAMPLING LOCATIONS
INITIAL SITE CONDITIONS, AND SITE EXCAVATION PLAN
REMEDIAL ACTION
McALLISTER POINT LANDFILL, NAVAL EDUCATION AND TRAINING CENTER, NEWPORT, RHODE ISLAND

PREPARED FOR

DEPARTMENT OF THE NAVY
NORTHERN DIVISION
NAVAL FACILITIES ENGINEERING COMMAND
LESTER, PENNSYLVANIA

OHM Remediation Services Corp.

NOTES:

1. 4 TEST PIT SAMPLES WERE LOCATED IN AREA A1 AND COMPOSITED AS SHOWN.
2. 10 TEST PIT SAMPLES WERE LOCATED IN AREA A2 AND SAMPLED AS SHOWN.
3. 6 TEST PIT SAMPLES WERE LOCATED IN AREA A3 AND COMPOSITED AS SHOWN.

REFERENCE:
SITE TOPOGRAPHY PLAN PREPARED FROM DRAWING SUPPLIED BY SAI SURVEYING CO., DWG.: DRKTR-P1, DATE: 8/9/95, SCALE: 1" = 40'

	Revisions	Date	Ck. by
01	Catch basins	1/30/96	
	Culvert pipe		
	UST		

OHM CORPORATION
PITTSBURGH, PA

DRAWN BY B.O'Connor 8/24/95
CHECKED BY
APPROVED BY
DRAWING NUMBER 16233-B4
PLOT SCALE: 1" = 40'

FIGURE NO. 2 DERECKTOR SHIPYARD - SITE RESTORATION

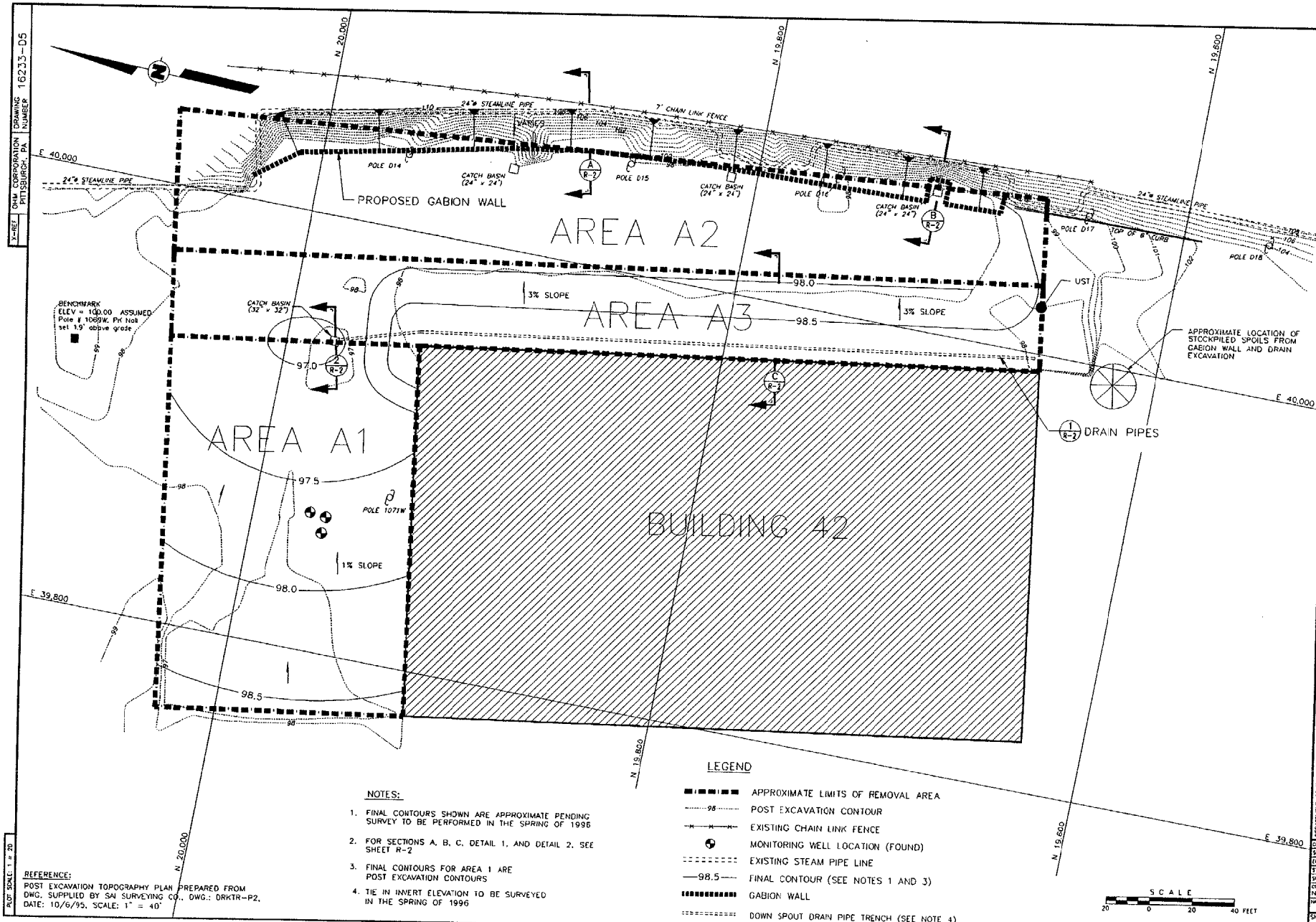

NOTES:

1. FINAL CONTOURS SHOWN ARE APPROXIMATE PENDING SURVEY TO BE PERFORMED IN THE SPRING OF 1996
2. FOR SECTIONS A, B, C, DETAIL 1, AND DETAIL 2, SEE SHEET R-2
3. FINAL CONTOURS FOR AREA 1 ARE POST EXCAVATION CONTOURS
4. TIE IN INVERT ELEVATION TO BE SURVEYED IN THE SPRING OF 1996

LEGEND

- APPROXIMATE LIMITS OF REMOVAL AREA
- 98 POST EXCAVATION CONTOUR
- EXISTING CHAIN LINK FENCE
- MONITORING WELL LOCATION (FOUND)
- EXISTING STEAM PIPE LINE
- 98.5 FINAL CONTOUR (SEE NOTES 1 AND 3)
- GABION WALL
- DOWN SPOUT DRAIN PIPE TRENCH (SEE NOTE 4)

REFERENCE:
POST EXCAVATION TOPOGRAPHY PLAN PREPARED FROM DWG. SUPPLIED BY SAI SURVEYING CO., DWG.: DRKTR-P2, DATE: 10/6/95, SCALE: 1" = 40'

PLOT SCALE: 1 = 20

J-REF | OHM CORPORATION PITTSBURGH, PA | DRAWING NUMBER 16233-D5

REVISIONS

NUMBER	DESCRIPTION	DATE	APPROVED BY
01	FINAL CONTOURS STOCKPILE	1/26/96	

OHM Remediation Services Corp.
OHM PROJECT NO. 16233
DRAWN BY A.C. Smith | TRACED BY Bob Smith | APPROVED BY J. Hoover | DATE 10/6/95
"FOR USE FOR TRANSFER OF SERVICE"

DEPARTMENT OF THE NAVY
NAVAL FACILITIES ENGINEERING COMMAND
NAVAL STATION: NORTHERN DIVISION LESTER, PENNSYLVANIA
NAVAL EDUCATION AND TRAINING CENTER NEWPORT, RHODE ISLAND

REMEDIAL ACTION
McALLISTER POINT LANDFILL - DERECKTOR SHIPYARD
SITE RESTORATION PLAN

SEAL AREA

CODE ID. NO. 80091 | SIZE: D
SCALE: AS SHOWN
E/O NO.
STA. PROJECT NO.
SPEC NO.
CONSTR. CONTRACT NO. N62470-93-D-3032
PAYTAC DRAWING NO.
SHEET I.D. R-1

FIGURE NO. 3 DERECKTOR SHIPYARD-GABION WALL AND DRAIN PIPE CONSTRUCTION DETAIL

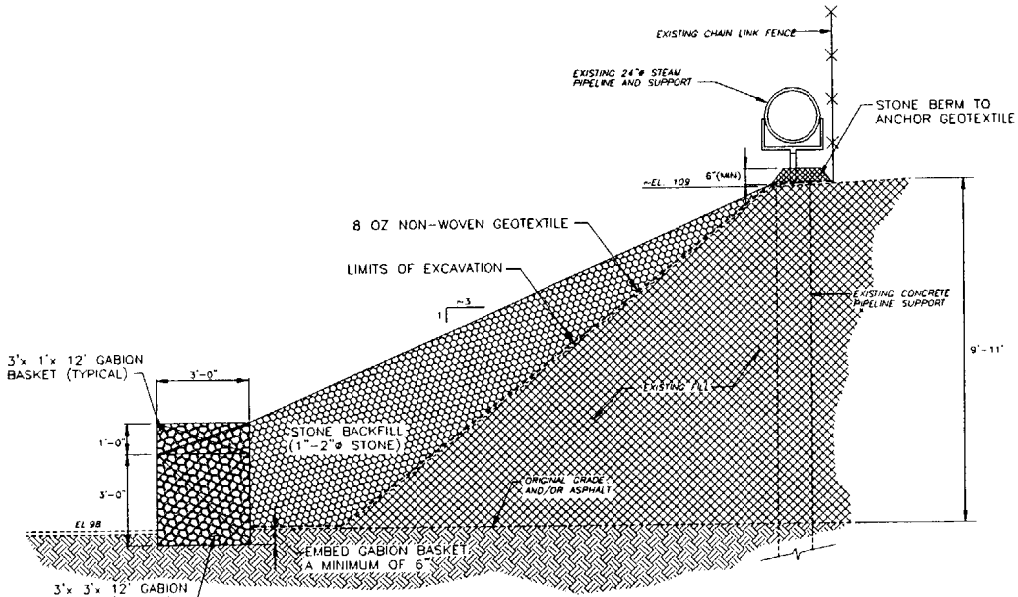

SECTION A/R-2
N. T. S.

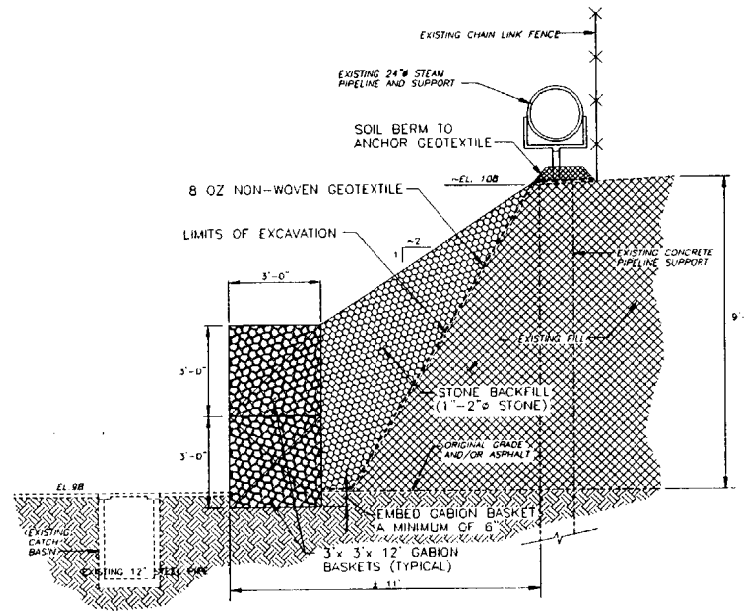

SECTION B/R-2
N. T. S.

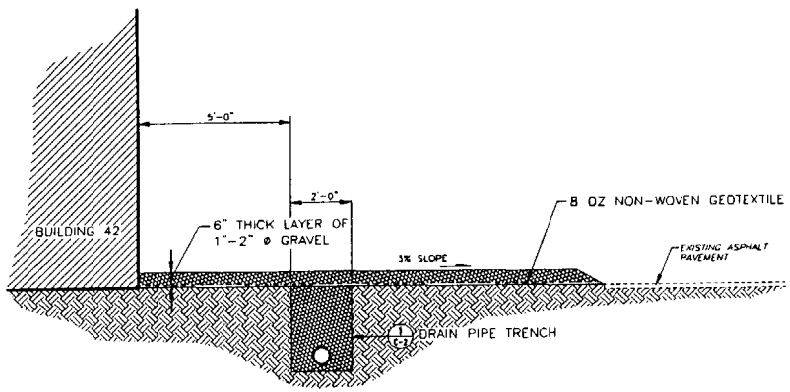

SECTION C/R-2
N. T. S.

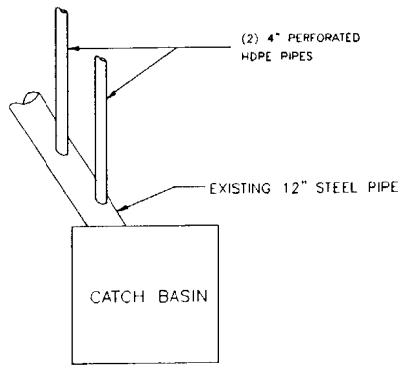

DETAIL 2/R-2
CATCH BASIN TIE IN
N. T. S.

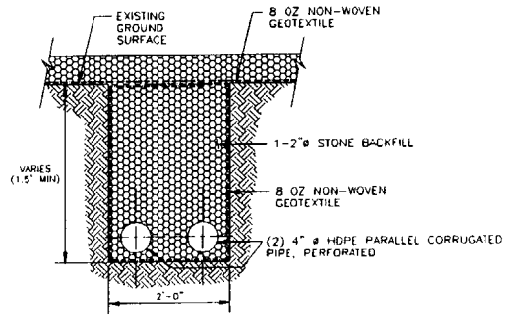

DETAIL 1/R-2
DRAIN PIPE TRENCH
N. T. S.

REVISIONS			
NUMBER	DESCRIPTION	DATE	APPROVED BY
01	DRAIN TIE IN, DRAIN PIPES	11/30/98	

OHM Remediation Services Corp.
OHM PROJECT NO. 16233

DEPARTMENT OF THE NAVY
NAVAL FACILITIES ENGINEERING COMMAND
NAVAL STATION NORTHERN DIVISION LESTER, PENNSYLVANIA
NAVAL EDUCATION AND TRAINING CENTER NEWPORT, RHODE ISLAND
REMEDIAL ACTION
McALLISTER POINT LANDFILL - DERECKTOR SHIPYARD
SECTIONS AND DETAILS

CODE IE NO. 80091 SIZE: D
SCALE: AS SHOWN
EFD NO.
STA. PROJECT NO.
SPEC NO.
CONSTR. CONTRACT NO. N62470-93-D-3032
NAVFAC DRAWING NO.
SHEET I.D. R-2

X-REF: OHM CORPORATION PITTSBURGH, PA
DRAWING NUMBER 16233-D6
PLOT SCALE: 1 = 1

APPENDIX A PRE-EXCAVATION ANALYTICAL RESULTS

VOLATILE DATA

1A
VOLATILE ORGANICS ANALYSIS DATA SHEET

EPA SAMPLE NO.

A1-1

Lab Name: NYTEST ENV INC Contract: 9521852

Lab Code: NYTEST Case No.: 24353 SAS No.: SDG No.: 24353

Matrix: (soil/water) WATER Lab Sample ID: 2435302

Sample wt/vol: 1.0 (g/mL) ML Lab File ID: N3238.D

Level: (low/med) LOW Date Received: 07/08/95

% Moisture: not dec. _____ Date Analyzed: 07/12/95

Column: (pack/cap) CAP Dilution Factor: 1.0

CAS NO.	COMPOUND	CONCENTRATION UNITS: (mg/L or mg/Kg) MG/L	Q
75-01-4	Vinyl Chloride	0.05	U
75-35-4	1,1-Dichloroethene	0.05	U
67-66-3	Chloroform	0.05	U
107-06-2	1,2-Dichloroethane	0.05	U
78-93-3	2-Butanone	0.05	U
56-23-5	Carbon Tetrachloride	0.05	U
79-01-6	Trichloroethene	0.05	U
71-43-2	Benzene	0.05	U
127-18-4	Tetrachloroethene	0.05	U
108-90-7	Chlorobenzene	0.05	U

1A
VOLATILE ORGANICS ANALYSIS DATA SHEET

EPA SAMPLE NO.

A1-2

Lab Name: NYTEST ENV INC Contract: 9521852

Lab Code: NYTEST Case No.: 24353 SAS No.: SDG No.: 24353

Matrix: (soil/water) WATER Lab Sample ID: 2435303

Sample wt/vol: 1.0 (g/mL) ML Lab File ID: N3239.D

Level: (low/med) LOW Date Received: 07/08/95

% Moisture: not dec. _____ Date Analyzed: 07/12/95

Column: (pack/cap) CAP Dilution Factor: 1.0

CAS NO.	COMPOUND	CONCENTRATION UNITS: (mg/L or mg/Kg) MG/L	Q
75-01-4	Vinyl Chloride	0.05	U
75-35-4	1,1-Dichloroethene	0.05	U
67-66-3	Chloroform	0.05	U
107-06-2	1,2-Dichloroethane	0.05	U
78-93-3	2-Butanone	0.05	U
56-23-5	Carbon Tetrachloride	0.05	U
79-01-6	Trichloroethene	0.05	U
71-43-2	Benzene	0.05	U
127-18-4	Tetrachloroethene	0.05	U
108-90-7	Chlorobenzene	0.05	U

1A
VOLATILE ORGANICS ANALYSIS DATA SHEET

EPA SAMPLE NO.

A1-3

Lab Name: NYTEST ENV INC Contract: 9521852

Lab Code: NYTEST Case No.: 24353 SAS No.: SDG No.: 24353

Matrix: (soil/water) WATER Lab Sample ID: 2435304

Sample wt/vol: 1.0 (g/mL) ML Lab File ID: N3240.D

Level: (low/med) LOW Date Received: 07/08/95

% Moisture: not dec. _____ Date Analyzed: 07/12/95

Column: (pack/cap) CAP Dilution Factor: 1.0

CAS NO.	COMPOUND	CONCENTRATION UNITS: (mg/L or mg/Kg) MG/L	Q
75-01-4	Vinyl Chloride	0.05	U
75-35-4	1,1-Dichloroethene	0.05	U
67-66-3	Chloroform	0.05	U
107-06-2	1,2-Dichloroethane	0.05	U
78-93-3	2-Butanone	0.05	U
56-23-5	Carbon Tetrachloride	0.05	U
79-01-6	Trichloroethene	0.05	U
71-43-2	Benzene	0.05	U
127-18-4	Tetrachloroethene	0.05	U
108-90-7	Chlorobenzene	0.05	U

1A
VOLATILE ORGANICS ANALYSIS DATA SHEET

EPA SAMPLE NO.

A1-4

Lab Name: NYTEST ENV INC Contract: 9521852

Lab Code: NYTEST Case No.: 24353 SAS No.: SDG No.: 24353

Matrix: (soil/water) WATER Lab Sample ID: 2435305

Sample wt/vol: 1.0 (g/mL) ML Lab File ID: N3241.D

Level: (low/med) LOW Date Received: 07/08/95

% Moisture: not dec. _____ Date Analyzed: 07/12/95

Column: (pack/cap) CAP Dilution Factor: 1.0

CAS NO.	COMPOUND	CONCENTRATION UNITS: (mg/L or mg/Kg) MG/L	Q
75-01-4	Vinyl Chloride	0.05	U
75-35-4	1,1-Dichloroethene	0.05	U
67-66-3	Chloroform	0.05	U
107-06-2	1,2-Dichloroethane	0.05	U
78-93-3	2-Butanone	0.05	U
56-23-5	Carbon Tetrachloride	0.05	U
79-01-6	Trichloroethene	0.05	U
71-43-2	Benzene	0.05	U
127-18-4	Tetrachloroethene	0.05	U
108-90-7	Chlorobenzene	0.05	U

1A
VOLATILE ORGANICS ANALYSIS DATA SHEET

EPA SAMPLE NO.

A2-1

Lab Name: NYTEST ENV INC Contract: 9521852

Lab Code: NYTEST Case No.: 24353 SAS No.: SDG No.: 24353

Matrix: (soil/water) WATER Lab Sample ID: 2435311

Sample wt/vol: 1.0 (g/mL) ML Lab File ID: N3247.D

Level: (low/med) LOW Date Received: 07/08/95

% Moisture: not dec. _____ Date Analyzed: 07/12/95

Column: (pack/cap) CAP Dilution Factor: 1.0

CAS NO.	COMPOUND	CONCENTRATION UNITS: (mg/L or mg/Kg) MG/L	Q
75-01-4	Vinyl Chloride	0.05	U
75-35-4	1,1-Dichloroethene	0.05	U
67-66-3	Chloroform	0.05	U
107-06-2	1,2-Dichloroethane	0.05	U
78-93-3	2-Butanone	0.05	U
56-23-5	Carbon Tetrachloride	0.05	U
79-01-6	Trichloroethene	0.05	U
71-43-2	Benzene	0.05	U
127-18-4	Tetrachloroethene	0.05	U
108-90-7	Chlorobenzene	0.05	U

1A
VOLATILE ORGANICS ANALYSIS DATA SHEET

EPA SAMPLE NO.

A2-2

Lab Name: NYTEST ENV INC Contract: 9521852

Lab Code: NYTEST Case No.: 24353 SAS No.: SDG No.: 24353

Matrix: (soil/water) WATER Lab Sample ID: 2435312

Sample wt/vol: 1.0 (g/mL) ML Lab File ID: N3250.D

Level: (low/med) LOW Date Received: 07/08/95

% Moisture: not dec. _____ Date Analyzed: 07/12/95

Column: (pack/cap) CAP Dilution Factor: 1.0

CAS NO.	COMPOUND	CONCENTRATION UNITS: (mg/L or mg/Kg) MG/L	Q
75-01-4	Vinyl Chloride	0.05	U
75-35-4	1,1-Dichloroethene	0.05	U
67-66-3	Chloroform	0.05	U
107-06-2	1,2-Dichloroethane	0.05	U
78-93-3	2-Butanone	0.05	U
56-23-5	Carbon Tetrachloride	0.05	U
79-01-6	Trichloroethene	0.05	U
71-43-2	Benzene	0.05	U
127-18-4	Tetrachloroethene	0.05	U
108-90-7	Chlorobenzene	0.05	U

1A
VOLATILE ORGANICS ANALYSIS DATA SHEET

EPA SAMPLE NO.

A2-3

Lab Name: NYTEST ENV INC Contract: 9521852

Lab Code: NYTEST Case No.: 24353 SAS No.: SDG No.: 24353

Matrix: (soil/water) WATER Lab Sample ID: 2435313

Sample wt/vol: 1.0 (g/mL) ML Lab File ID: N3251.D

Level: (low/med) LOW Date Received: 07/08/95

% Moisture: not dec. _____ Date Analyzed: 07/12/95

Column: (pack/cap) CAP Dilution Factor: 1.0

CAS NO.	COMPOUND	CONCENTRATION UNITS: (mg/L or mg/Kg) MG/L	Q
75-01-4	Vinyl Chloride	0.05	U
75-35-4	1,1-Dichloroethene	0.05	U
67-66-3	Chloroform	0.05	U
107-06-2	1,2-Dichloroethane	0.05	U
78-93-3	2-Butanone	0.05	U
56-23-5	Carbon Tetrachloride	0.05	U
79-01-6	Trichloroethene	0.05	U
71-43-2	Benzene	0.05	U
127-18-4	Tetrachloroethene	0.05	U
108-90-7	Chlorobenzene	0.05	U

1A
VOLATILE ORGANICS ANALYSIS DATA SHEET

EPA SAMPLE NO.

A2-4

Lab Name: NYTEST ENV INC Contract: 9521852

Lab Code: NYTEST Case No.: 24353 SAS No.: SDG No.: 24353

Matrix: (soil/water) WATER Lab Sample ID: 2435314

Sample wt/vol: 1.0 (g/mL) ML Lab File ID: N3252.D

Level: (low/med) LOW Date Received: 07/08/95

% Moisture: not dec. _____ Date Analyzed: 07/12/95

Column: (pack/cap) CAP Dilution Factor: 1.0

CAS NO.	COMPOUND	CONCENTRATION UNITS: (mg/L or mg/Kg) MG/L	Q
75-01-4	Vinyl Chloride	0.05	U
75-35-4	1,1-Dichloroethene	0.05	U
67-66-3	Chloroform	0.05	U
107-06-2	1,2-Dichloroethane	0.05	U
78-93-3	2-Butanone	0.05	U
56-23-5	Carbon Tetrachloride	0.05	U
79-01-6	Trichloroethene	0.05	U
71-43-2	Benzene	0.05	U
127-18-4	Tetrachloroethene	0.05	U
108-90-7	Chlorobenzene	0.05	U

1A
VOLATILE ORGANICS ANALYSIS DATA SHEET

EPA SAMPLE NO.

A2-5

Lab Name: NYTEST ENV INC Contract: 9521852

Lab Code: NYTEST Case No.: 24353 SAS No.: SDG No.: 24353

Matrix: (soil/water) WATER Lab Sample ID: 2435315

Sample wt/vol: 1.0 (g/mL) ML Lab File ID: N3258.D

Level: (low/med) LOW Date Received: 07/08/95

% Moisture: not dec. _____ Date Analyzed: 07/13/95

Column: (pack/cap) CAP Dilution Factor: 1.0

CAS NO.	COMPOUND	CONCENTRATION UNITS: (mg/L or mg/Kg) MG/L	Q
75-01-4	Vinyl Chloride	0.05	U
75-35-4	1,1-Dichloroethene	0.05	U
67-66-3	Chloroform	0.05	U
107-06-2	1,2-Dichloroethane	0.05	U
78-93-3	2-Butanone	0.05	U
56-23-5	Carbon Tetrachloride	0.05	U
79-01-6	Trichloroethene	0.05	U
71-43-2	Benzene	0.05	U
127-18-4	Tetrachloroethene	0.05	U
108-90-7	Chlorobenzene	0.05	U

1A
VOLATILE ORGANICS ANALYSIS DATA SHEET

EPA SAMPLE NO.

A2-6

Lab Name: NYTEST ENV INC Contract: 9521852

Lab Code: NYTEST Case No.: 24353 SAS No.: SDG No.: 24353

Matrix: (soil/water) WATER Lab Sample ID: 2435316

Sample wt/vol: 1.0 (g/mL) ML Lab File ID: N3259.D

Level: (low/med) LOW Date Received: 07/08/95

% Moisture: not dec. _____ Date Analyzed: 07/13/95

Column: (pack/cap) CAP Dilution Factor: 1.0

CAS NO.	COMPOUND	CONCENTRATION UNITS: (mg/L or mg/Kg) MG/L	Q
75-01-4	Vinyl Chloride	0.05	U
75-35-4	1,1-Dichloroethene	0.05	U
67-66-3	Chloroform	0.05	U
107-06-2	1,2-Dichloroethane	0.05	U
78-93-3	2-Butanone	0.05	U
56-23-5	Carbon Tetrachloride	0.05	U
79-01-6	Trichloroethene	0.05	U
71-43-2	Benzene	0.05	U
127-18-4	Tetrachloroethene	0.05	U
108-90-7	Chlorobenzene	0.05	U

1A
VOLATILE ORGANICS ANALYSIS DATA SHEET

EPA SAMPLE NO.

A2-7

Lab Name: NYTEST ENV INC Contract: 9521852

Lab Code: NYTEST Case No.: 24353 SAS No.: SDG No.: 24353

Matrix: (soil/water) WATER Lab Sample ID: 2435317

Sample wt/vol: 1.0 (g/mL) ML Lab File ID: N3260.D

Level: (low/med) LOW Date Received: 07/08/95

% Moisture: not dec. _____ Date Analyzed: 07/13/95

Column: (pack/cap) CAP Dilution Factor: 1.0

CAS NO.	COMPOUND	CONCENTRATION UNITS: (mg/L or mg/Kg) MG/L	Q
75-01-4	Vinyl Chloride	0.05	U
75-35-4	1,1-Dichloroethene	0.05	U
67-66-3	Chloroform	0.05	U
107-06-2	1,2-Dichloroethane	0.05	U
78-93-3	2-Butanone	0.05	U
56-23-5	Carbon Tetrachloride	0.05	U
79-01-6	Trichloroethene	0.05	U
71-43-2	Benzene	0.05	U
127-18-4	Tetrachloroethene	0.05	U
108-90-7	Chlorobenzene	0.05	U

1A
VOLATILE ORGANICS ANALYSIS DATA SHEET

EPA SAMPLE NO.

A2-8

Lab Name: NYTEST ENV INC Contract: 9521852

Lab Code: NYTEST Case No.: 24353 SAS No.: SDG No.: 24353

Matrix: (soil/water) WATER Lab Sample ID: 2435318

Sample wt/vol: 1.0 (g/mL) ML Lab File ID: N3261.D

Level: (low/med) LOW Date Received: 07/08/95

% Moisture: not dec. _____ Date Analyzed: 07/13/95

Column: (pack/cap) CAP Dilution Factor: 1.0

CAS NO.	COMPOUND	CONCENTRATION UNITS: (mg/L or mg/Kg) MG/L	Q
75-01-4	Vinyl Chloride	0.05	U
75-35-4	1,1-Dichloroethene	0.05	U
67-66-3	Chloroform	0.05	U
107-06-2	1,2-Dichloroethane	0.05	U
78-93-3	2-Butanone	0.05	U
56-23-5	Carbon Tetrachloride	0.05	U
79-01-6	Trichloroethene	0.05	U
71-43-2	Benzene	0.05	U
127-18-4	Tetrachloroethene	0.05	U
108-90-7	Chlorobenzene	0.05	U

1A
VOLATILE ORGANICS ANALYSIS DATA SHEET

EPA SAMPLE NO.

A2-9

Lab Name: NYTEST ENV INC Contract: 9521852

Lab Code: NYTEST Case No.: 24353 SAS No.: SDG No.: 24353

Matrix: (soil/water) WATER Lab Sample ID: 2435319

Sample wt/vol: 1.0 (g/mL) ML Lab File ID: N3262.D

Level: (low/med) LOW Date Received: 07/08/95

% Moisture: not dec. _____ Date Analyzed: 07/13/95

Column: (pack/cap) CAP Dilution Factor: 1.0

CAS NO.	COMPOUND	CONCENTRATION UNITS: (mg/L or mg/Kg) MG/L	Q
75-01-4	Vinyl Chloride	0.05	U
75-35-4	1,1-Dichloroethene	0.05	U
67-66-3	Chloroform	0.05	U
107-06-2	1,2-Dichloroethane	0.05	U
78-93-3	2-Butanone	0.05	U
56-23-5	Carbon Tetrachloride	0.05	U
79-01-6	Trichloroethene	0.05	U
71-43-2	Benzene	0.05	U
127-18-4	Tetrachloroethene	0.05	U
108-90-7	Chlorobenzene	0.05	U

1A
VOLATILE ORGANICS ANALYSIS DATA SHEET

EPA SAMPLE NO.

A2-10

Lab Name: NYTEST ENV INC Contract: 9521852

Lab Code: NYTEST Case No.: 24353 SAS No.: SDG No.: 24353

Matrix: (soil/water) WATER Lab Sample ID: 2435320

Sample wt/vol: 1.0 (g/mL) ML Lab File ID: N3263.D

Level: (low/med) LOW Date Received: 07/08/95

% Moisture: not dec. _____ Date Analyzed: 07/14/95

Column: (pack/cap) CAP Dilution Factor: 1.0

CAS NO.	COMPOUND	CONCENTRATION UNITS: (mg/L or mg/Kg) MG/L	Q
75-01-4	Vinyl Chloride	0.05	U
75-35-4	1,1-Dichloroethene	0.05	U
67-66-3	Chloroform	0.05	U
107-06-2	1,2-Dichloroethane	0.05	U
78-93-3	2-Butanone	0.05	U
56-23-5	Carbon Tetrachloride	0.05	U
79-01-6	Trichloroethene	0.05	U
71-43-2	Benzene	0.05	U
127-18-4	Tetrachloroethene	0.05	U
108-90-7	Chlorobenzene	0.05	U

1A
VOLATILE ORGANICS ANALYSIS DATA SHEET

EPA SAMPLE NO.

A3-1

Lab Name: NYTEST ENV INC Contract: 9521852

Lab Code: NYTEST Case No.: 24353 SAS No.: SDG No.: 24353

Matrix: (soil/water) WATER Lab Sample ID: 2435306

Sample wt/vol: 1.0 (g/mL) ML Lab File ID: N3242.D

Level: (low/med) LOW Date Received: 07/08/95

% Moisture: not dec. _____ Date Analyzed: 07/12/95

Column: (pack/cap) CAP Dilution Factor: 1.0

CAS NO.	COMPOUND	CONCENTRATION UNITS: (mg/L or mg/Kg) MG/L	Q
75-01-4	Vinyl Chloride	0.05	U
75-35-4	1,1-Dichloroethene	0.05	U
67-66-3	Chloroform	0.05	U
107-06-2	1,2-Dichloroethane	0.05	U
78-93-3	2-Butanone	0.05	U
56-23-5	Carbon Tetrachloride	0.05	U
79-01-6	Trichloroethene	0.05	U
71-43-2	Benzene	0.05	U
127-18-4	Tetrachloroethene	0.05	U
108-90-7	Chlorobenzene	0.05	U

1A
VOLATILE ORGANICS ANALYSIS DATA SHEET

EPA SAMPLE NO.

A3-2

Lab Name: NYTEST ENV INC Contract: 9521852

Lab Code: NYTEST Case No.: 24353 SAS No.: SDG No.: 24353

Matrix: (soil/water) WATER Lab Sample ID: 2435307

Sample wt/vol: 1.0 (g/mL) ML Lab File ID: N3243.D

Level: (low/med) LOW Date Received: 07/08/95

% Moisture: not dec. _____ Date Analyzed: 07/12/95

Column: (pack/cap) CAP Dilution Factor: 1.0

CAS NO.	COMPOUND	CONCENTRATION UNITS: (mg/L or mg/Kg) MG/L	Q
75-01-4	Vinyl Chloride	0.05	U
75-35-4	1,1-Dichloroethene	0.05	U
67-66-3	Chloroform	0.05	U
107-06-2	1,2-Dichloroethane	0.05	U
78-93-3	2-Butanone	0.05	U
56-23-5	Carbon Tetrachloride	0.05	U
79-01-6	Trichloroethene	0.05	U
71-43-2	Benzene	0.05	U
127-18-4	Tetrachloroethene	0.05	U
108-90-7	Chlorobenzene	0.05	U

1A
VOLATILE ORGANICS ANALYSIS DATA SHEET

EPA SAMPLE NO.

A3-3

Lab Name: NYTEST ENV INC Contract: 9521852

Lab Code: NYTEST Case No.: 24353 SAS No.: SDG No.: 24353

Matrix: (soil/water) WATER Lab Sample ID: 2435308

Sample wt/vol: 1.0 (g/mL) ML Lab File ID: N3244.D

Level: (low/med) LOW Date Received: 07/08/95

% Moisture: not dec. _____ Date Analyzed: 07/12/95

Column: (pack/cap) CAP Dilution Factor: 1.0

CAS NO.	COMPOUND	CONCENTRATION UNITS: (mg/L or mg/Kg) MG/L	Q
75-01-4	Vinyl Chloride	0.05	U
75-35-4	1,1-Dichloroethene	0.05	U
67-66-3	Chloroform	0.05	U
107-06-2	1,2-Dichloroethane	0.05	U
78-93-3	2-Butanone	0.05	U
56-23-5	Carbon Tetrachloride	0.05	U
79-01-6	Trichloroethene	0.05	U
71-43-2	Benzene	0.05	U
127-18-4	Tetrachloroethene	0.05	U
108-90-7	Chlorobenzene	0.05	U

1A
VOLATILE ORGANICS ANALYSIS DATA SHEET

EPA SAMPLE NO.

A3-4

Lab Name: NYTEST ENV INC Contract: 9521852

Lab Code: NYTEST Case No.: 24353 SAS No.: SDG No.: 24353

Matrix: (soil/water) WATER Lab Sample ID: 2435309

Sample wt/vol: 1.0 (g/mL) ML Lab File ID: N3245.D

Level: (low/med) LOW Date Received: 07/08/95

% Moisture: not dec. _____ Date Analyzed: 07/12/95

Column: (pack/cap) CAP Dilution Factor: 1.0

CAS NO.	COMPOUND	CONCENTRATION UNITS: (mg/L or mg/Kg) MG/L	Q
75-01-4	Vinyl Chloride	0.05	U
75-35-4	1,1-Dichloroethene	0.05	U
67-66-3	Chloroform	0.05	U
107-06-2	1,2-Dichloroethane	0.05	U
78-93-3	2-Butanone	0.05	U
56-23-5	Carbon Tetrachloride	0.05	U
79-01-6	Trichloroethene	0.05	U
71-43-2	Benzene	0.05	U
127-18-4	Tetrachloroethene	0.05	U
108-90-7	Chlorobenzene	0.05	U

1A
VOLATILE ORGANICS ANALYSIS DATA SHEET

EPA SAMPLE NO.

A3-5

Lab Name: NYTEST ENV INC Contract: 9521852

Lab Code: NYTEST Case No.: 24353 SAS No.: SDG No.: 24353

Matrix: (soil/water) WATER Lab Sample ID: 2435310

Sample wt/vol: 1.0 (g/mL) ML Lab File ID: N3246.D

Level: (low/med) LOW Date Received: 07/08/95

% Moisture: not dec. _____ Date Analyzed: 07/12/95

Column: (pack/cap) CAP Dilution Factor: 1.0

CAS NO.	COMPOUND	CONCENTRATION UNITS: (mg/L or mg/Kg) MG/L	Q
75-01-4	Vinyl Chloride	0.05	U
75-35-4	1,1-Dichloroethene	0.05	U
67-66-3	Chloroform	0.05	U
107-06-2	1,2-Dichloroethane	0.05	U
78-93-3	2-Butanone	0.05	U
56-23-5	Carbon Tetrachloride	0.05	U
79-01-6	Trichloroethene	0.05	U
71-43-2	Benzene	0.05	U
127-18-4	Tetrachloroethene	0.05	U
108-90-7	Chlorobenzene	0.05	U

1A
VOLATILE ORGANICS ANALYSIS DATA SHEET

EPA SAMPLE NO.

A3-6

Lab Name: NYTEST ENV INC Contract: 9521852

Lab Code: NYTEST Case No.: 24353 SAS No.: SDG No.: 24353

Matrix: (soil/water) WATER Lab Sample ID: 2435301

Sample wt/vol: 1.0 (g/mL) ML Lab File ID: N3237.D

Level: (low/med) LOW Date Received: 07/08/95

% Moisture: not dec. _____ Date Analyzed: 07/12/95

Column: (pack/cap) CAP Dilution Factor: 1.0

CAS NO.	COMPOUND	CONCENTRATION UNITS: (mg/L or mg/Kg) MG/L	Q
75-01-4	Vinyl Chloride	0.05	U
75-35-4	1,1-Dichloroethene	0.05	U
67-66-3	Chloroform	0.05	U
107-06-2	1,2-Dichloroethane	0.05	U
78-93-3	2-Butanone	0.05	U
56-23-5	Carbon Tetrachloride	0.05	U
79-01-6	Trichloroethene	0.05	U
71-43-2	Benzene	0.05	U
127-18-4	Tetrachloroethene	0.05	U
108-90-7	Chlorobenzene	0.05	U

SEMIVOLATILE DATA

1B
SEMIVOLATILE ORGANICS ANALYSIS DATA SHEET

EPA SAMPLE NO.

A1-1

Lab Name: NYTEST ENV INC Contract: 9521852

Lab Code: NYTEST Case No.: 24353 SAS No.: SDG No.: 24353

Matrix: (soil/water) WATER Lab Sample ID: 2435302

Sample wt/vol: 250 (g/mL) ML Lab File ID: R5362.D

Level: (low/med) LOW Date Received: 07/08/95

% Moisture: not dec. 0 dec. Date Extracted: 07/14/95

Extraction: (SepF/Cont/Sonc) SEPF Date Analyzed: 07/14/95

GPC Cleanup: (Y/N) N pH: 5.0 Dilution Factor: 1.0

CAS NO.	COMPOUND	CONCENTRATION UNITS: (mg/L or mg/Kg) MG/L	Q
95-48-7	2-Methylphenol	0.04	U
	3+4-Methylphenol	0.08	U
121-14-2	2,4-Dinitrotoluene	0.04	U
118-74-1	Hexachlorobenzene	0.04	U
87-68-3	Hexachlorobutadiene	0.04	U
67-72-1	Hexachloroethane	0.04	U
98-95-3	Nitrobenzene	0.04	U
87-86-5	Pentachlorophenol	0.20	U
110-86-1	Pyridine	0.04	U
95-95-4	2,4,5-Trichlorophenol	0.04	U
88-06-2	2,4,6-Trichlorophenol	0.04	U
106-46-7	1,4-Dichlorobenzene	0.04	U

1B
SEMIVOLATILE ORGANICS ANALYSIS DATA SHEET

EPA SAMPLE NO.

A1-2

Lab Name: NYTEST ENV INC Contract: 9521852

Lab Code: NYTEST Case No.: 24353 SAS No.: SDG No.: 24353

Matrix: (soil/water) WATER Lab Sample ID: 2435303

Sample wt/vol: 250 (g/mL) ML Lab File ID: R5363.D

Level: (low/med) LOW Date Received: 07/08/95

% Moisture: not dec. 0 dec. Date Extracted: 07/14/95

Extraction: (SepF/Cont/Sonc) SEPF Date Analyzed: 07/14/95

GPC Cleanup: (Y/N) N pH: 5.0 Dilution Factor: 1.0

CAS NO.	COMPOUND	CONCENTRATION UNITS: (mg/L or mg/Kg) MG/L	Q
95-48-7	2-Methylphenol	0.04	U
	3+4-Methylphenol	0.08	U
121-14-2	2,4-Dinitrotoluene	0.04	U
118-74-1	Hexachlorobenzene	0.04	U
87-68-3	Hexachlorobutadiene	0.04	U
67-72-1	Hexachloroethane	0.04	U
98-95-3	Nitrobenzene	0.04	U
87-86-5	Pentachlorophenol	0.20	U
110-86-1	Pyridine	0.04	U
95-95-4	2,4,5-Trichlorophenol	0.04	U
88-06-2	2,4,6-Trichlorophenol	0.04	U
106-46-7	1,4-Dichlorobenzene	0.04	U

1B
SEMIVOLATILE ORGANICS ANALYSIS DATA SHEET

EPA SAMPLE NO.

A1-3

Lab Name: NYTEST ENV INC Contract: 9521852

Lab Code: NYTEST Case No.: 24353 SAS No.: SDG No.: 24353

Matrix: (soil/water) WATER Lab Sample ID: 2435304

Sample wt/vol: 250 (g/mL) ML Lab File ID: R5364.D

Level: (low/med) LOW Date Received: 07/08/95

% Moisture: not dec. 0 dec. Date Extracted: 07/14/95

Extraction: (SepF/Cont/Sonc) SEPF Date Analyzed: 07/14/95

GPC Cleanup: (Y/N) N pH: 5.0 Dilution Factor: 1.0

CAS NO.	COMPOUND	CONCENTRATION UNITS: (mg/L or mg/Kg) MG/L	Q
95-48-7	2-Methylphenol	0.04	U
	3+4-Methylphenol	0.08	U
121-14-2	2,4-Dinitrotoluene	0.04	U
118-74-1	Hexachlorobenzene	0.04	U
87-68-3	Hexachlorobutadiene	0.04	U
67-72-1	Hexachloroethane	0.04	U
98-95-3	Nitrobenzene	0.04	U
87-86-5	Pentachlorophenol	0.20	U
110-86-1	Pyridine	0.04	U
95-95-4	2,4,5-Trichlorophenol	0.04	U
88-06-2	2,4,6-Trichlorophenol	0.04	U
106-46-7	1,4-Dichlorobenzene	0.04	U

1B
SEMIVOLATILE ORGANICS ANALYSIS DATA SHEET

EPA SAMPLE NO.

A1-4

Lab Name: NYTEST ENV INC Contract: 9521852

Lab Code: NYTEST Case No.: 24353 SAS No.: SDG No.: 24353

Matrix: (soil/water) WATER Lab Sample ID: 2435305

Sample wt/vol: 250 (g/mL) ML Lab File ID: R5365.D

Level: (low/med) LOW Date Received: 07/08/95

% Moisture: not dec. 0 dec. Date Extracted: 07/14/95

Extraction: (SepF/Cont/Sonc) SEPF Date Analyzed: 07/14/95

GPC Cleanup: (Y/N) N pH: 5.0 Dilution Factor: 1.0

CAS NO.	COMPOUND	CONCENTRATION UNITS: (mg/L or mg/Kg) MG/L	Q
95-48-7	2-Methylphenol	0.04	U
	3+4-Methylphenol	0.08	U
121-14-2	2,4-Dinitrotoluene	0.04	U
118-74-1	Hexachlorobenzene	0.04	U
87-68-3	Hexachlorobutadiene	0.04	U
67-72-1	Hexachloroethane	0.04	U
98-95-3	Nitrobenzene	0.04	U
87-86-5	Pentachlorophenol	0.20	U
110-86-1	Pyridine	0.04	U
95-95-4	2,4,5-Trichlorophenol	0.04	U
88-06-2	2,4,6-Trichlorophenol	0.04	U
106-46-7	1,4-Dichlorobenzene	0.04	U

1B
SEMIVOLATILE ORGANICS ANALYSIS DATA SHEET

EPA SAMPLE NO.

A2-1

Lab Name: NYTEST ENV INC Contract: 9521852

Lab Code: NYTEST Case No.: 24353 SAS No.: SDG No.: 24353

Matrix: (soil/water) WATER Lab Sample ID: 2435311

Sample wt/vol: 250 (g/mL) ML Lab File ID: R5371.D

Level: (low/med) LOW Date Received: 07/08/95

% Moisture: not dec. 0 dec. Date Extracted: 07/14/95

Extraction: (SepF/Cont/Sonc) SEPF Date Analyzed: 07/14/95

GPC Cleanup: (Y/N) N pH: 5.0 Dilution Factor: 1.0

CAS NO.	COMPOUND	CONCENTRATION UNITS: (mg/L or mg/Kg) MG/L	Q
95-48-7	2-Methylphenol	0.04	U
	3+4-Methylphenol	0.08	U
121-14-2	2,4-Dinitrotoluene	0.04	U
118-74-1	Hexachlorobenzene	0.04	U
87-68-3	Hexachlorobutadiene	0.04	U
67-72-1	Hexachloroethane	0.04	U
98-95-3	Nitrobenzene	0.04	U
87-86-5	Pentachlorophenol	0.20	U
110-86-1	Pyridine	0.04	U
95-95-4	2,4,5-Trichlorophenol	0.04	U
88-06-2	2,4,6-Trichlorophenol	0.04	U
106-46-7	1,4-Dichlorobenzene	0.04	U

1B
SEMIVOLATILE ORGANICS ANALYSIS DATA SHEET

EPA SAMPLE NO.

A2-2

Lab Name: NYTEST ENV INC Contract: 9521852

Lab Code: NYTEST Case No.: 24353 SAS No.: SDG No.: 24353

Matrix: (soil/water) WATER Lab Sample ID: 2435312

Sample wt/vol: 250 (g/mL) ML Lab File ID: R5332.D

Level: (low/med) LOW Date Received: 07/08/95

% Moisture: not dec. 0 dec. Date Extracted: 07/11/95

Extraction: (SepF/Cont/Sonc) SEPF Date Analyzed: 07/13/95

GPC Cleanup: (Y/N) N pH: 5.0 Dilution Factor: 1.0

CAS NO.	COMPOUND	CONCENTRATION UNITS: (mg/L or mg/Kg) MG/L	Q
95-48-7	2-Methylphenol	0.04	U
	3+4-Methylphenol	0.08	U
121-14-2	2,4-Dinitrotoluene	0.04	U
118-74-1	Hexachlorobenzene	0.04	U
87-68-3	Hexachlorobutadiene	0.04	U
67-72-1	Hexachloroethane	0.04	U
98-95-3	Nitrobenzene	0.04	U
87-86-5	Pentachlorophenol	0.20	U
110-86-1	Pyridine	0.04	U
95-95-4	2,4,5-Trichlorophenol	0.04	U
88-06-2	2,4,6-Trichlorophenol	0.04	U
106-46-7	1,4-Dichlorobenzene	0.04	U

1B
SEMIVOLATILE ORGANICS ANALYSIS DATA SHEET

EPA SAMPLE NO.

A2-3

Lab Name: NYTEST ENV INC Contract: 9521852

Lab Code: NYTEST Case No.: 24353 SAS No.: SDG No.: 24353

Matrix: (soil/water) WATER Lab Sample ID: 2435313

Sample wt/vol: 250 (g/mL) ML Lab File ID: R5337.D

Level: (low/med) LOW Date Received: 07/08/95

% Moisture: not dec. 0 dec. Date Extracted: 07/11/95

Extraction: (SepF/Cont/Sonc) SEPF Date Analyzed: 07/13/95

GPC Cleanup: (Y/N) N pH: 5.0 Dilution Factor: 1.0

CAS NO.	COMPOUND	CONCENTRATION UNITS: (mg/L or mg/Kg) MG/L	Q
95-48-7	2-Methylphenol	0.04	U
	3+4-Methylphenol	0.08	U
121-14-2	2,4-Dinitrotoluene	0.04	U
118-74-1	Hexachlorobenzene	0.04	U
87-68-3	Hexachlorobutadiene	0.04	U
67-72-1	Hexachloroethane	0.04	U
98-95-3	Nitrobenzene	0.04	U
87-86-5	Pentachlorophenol	0.20	U
110-86-1	Pyridine	0.04	U
95-95-4	2,4,5-Trichlorophenol	0.04	U
88-06-2	2,4,6-Trichlorophenol	0.04	U
106-46-7	1,4-Dichlorobenzene	0.04	U

1B
SEMIVOLATILE ORGANICS ANALYSIS DATA SHEET

EPA SAMPLE NO.

A2-4

Lab Name: NYTEST ENV INC Contract: 9521852

Lab Code: NYTEST Case No.: 24353 SAS No.: SDG No.: 24353

Matrix: (soil/water) WATER Lab Sample ID: 2435314

Sample wt/vol: 250 (g/mL) ML Lab File ID: R5338.D

Level: (low/med) LOW Date Received: 07/08/95

% Moisture: not dec. 0 dec. Date Extracted: 07/11/95

Extraction: (SepF/Cont/Sonc) SEPF Date Analyzed: 07/13/95

GPC Cleanup: (Y/N) N pH: 5.0 Dilution Factor: 1.0

CAS NO.	COMPOUND	CONCENTRATION UNITS: (mg/L or mg/Kg) MG/L	Q
95-48-7	2-Methylphenol	0.04	U
	3+4-Methylphenol	0.08	U
121-14-2	2,4-Dinitrotoluene	0.04	U
118-74-1	Hexachlorobenzene	0.04	U
87-68-3	Hexachlorobutadiene	0.04	U
67-72-1	Hexachloroethane	0.04	U
98-95-3	Nitrobenzene	0.04	U
87-86-5	Pentachlorophenol	0.20	U
110-86-1	Pyridine	0.04	U
95-95-4	2,4,5-Trichlorophenol	0.04	U
88-06-2	2,4,6-Trichlorophenol	0.04	U
106-46-7	1,4-Dichlorobenzene	0.04	U

1B
SEMIVOLATILE ORGANICS ANALYSIS DATA SHEET

EPA SAMPLE NO.

A2-4RE

Lab Name: NYTEST ENV INC Contract: 9521852

Lab Code: NYTEST Case No.: 24353 SAS No.: SDG No.: 24353

Matrix: (soil/water) WATER Lab Sample ID: 2435314

Sample wt/vol: 250 (g/mL) ML Lab File ID: R5372.D

Level: (low/med) LOW Date Received: 07/08/95

% Moisture: not dec. 0 dec. Date Extracted: 07/14/95

Extraction: (SepF/Cont/Sonc) SEPF Date Analyzed: 07/14/95

GPC Cleanup: (Y/N) N pH: 5.0 Dilution Factor: 1.0

CAS NO.	COMPOUND	CONCENTRATION UNITS: (mg/L or mg/Kg) MG/L	Q
95-48-7	2-Methylphenol	0.04	U
	3+4-Methylphenol	0.08	U
121-14-2	2,4-Dinitrotoluene	0.04	U
118-74-1	Hexachlorobenzene	0.04	U
87-68-3	Hexachlorobutadiene	0.04	U
67-72-1	Hexachloroethane	0.04	U
98-95-3	Nitrobenzene	0.04	U
87-86-5	Pentachlorophenol	0.20	U
110-86-1	Pyridine	0.04	U
95-95-4	2,4,5-Trichlorophenol	0.04	U
88-06-2	2,4,6-Trichlorophenol	0.04	U
106-46-7	1,4-Dichlorobenzene	0.04	U

1B
SEMIVOLATILE ORGANICS ANALYSIS DATA SHEET

EPA SAMPLE NO.

A2-5

Lab Name: NYTEST ENV INC Contract: 9521852

Lab Code: NYTEST Case No.: 24353 SAS No.: SDG No.: 24353

Matrix: (soil/water) WATER Lab Sample ID: 2435315

Sample wt/vol: 250 (g/mL) ML Lab File ID: R5339.D

Level: (low/med) LOW Date Received: 07/08/95

% Moisture: not dec. 0 dec. Date Extracted: 07/11/95

Extraction: (SepF/Cont/Sonc) SEPF Date Analyzed: 07/13/95

GPC Cleanup: (Y/N) N pH: 5.0 Dilution Factor: 1.0

CAS NO.	COMPOUND	CONCENTRATION UNITS: (mg/L or mg/Kg) MG/L	Q
95-48-7	2-Methylphenol	0.04	U
	3+4-Methylphenol	0.08	U
121-14-2	2,4-Dinitrotoluene	0.04	U
118-74-1	Hexachlorobenzene	0.04	U
87-68-3	Hexachlorobutadiene	0.04	U
67-72-1	Hexachloroethane	0.04	U
98-95-3	Nitrobenzene	0.04	U
87-86-5	Pentachlorophenol	0.20	U
110-86-1	Pyridine	0.04	U
95-95-4	2,4,5-Trichlorophenol	0.04	U
88-06-2	2,4,6-Trichlorophenol	0.04	U
106-46-7	1,4-Dichlorobenzene	0.04	U

1B
SEMIVOLATILE ORGANICS ANALYSIS DATA SHEET

EPA SAMPLE NO.

A2-6

Lab Name: NYTEST ENV INC Contract: 9521852

Lab Code: NYTEST Case No.: 24353 SAS No.: SDG No.: 24353

Matrix: (soil/water) WATER Lab Sample ID: 2435316

Sample wt/vol: 250 (g/mL) ML Lab File ID: R5340.D

Level: (low/med) LOW Date Received: 07/08/95

% Moisture: not dec. 0 dec. Date Extracted: 07/11/95

Extraction: (SepF/Cont/Sonc) SEPF Date Analyzed: 07/14/95

GPC Cleanup: (Y/N) N pH: 5.0 Dilution Factor: 1.0

CAS NO.	COMPOUND	CONCENTRATION UNITS: (mg/L or mg/Kg) MG/L	Q
95-48-7	2-Methylphenol	0.04	U
	3+4-Methylphenol	0.08	U
121-14-2	2,4-Dinitrotoluene	0.04	U
118-74-1	Hexachlorobenzene	0.04	U
87-68-3	Hexachlorobutadiene	0.04	U
67-72-1	Hexachloroethane	0.04	U
98-95-3	Nitrobenzene	0.04	U
87-86-5	Pentachlorophenol	0.20	U
110-86-1	Pyridine	0.04	U
95-95-4	2,4,5-Trichlorophenol	0.04	U
88-06-2	2,4,6-Trichlorophenol	0.04	U
106-46-7	1,4-Dichlorobenzene	0.04	U

1B
SEMIVOLATILE ORGANICS ANALYSIS DATA SHEET

EPA SAMPLE NO.

A2-7

Lab Name: NYTEST ENV INC Contract: 9521852

Lab Code: NYTEST Case No.: 24353 SAS No.: SDG No.: 24353

Matrix: (soil/water) WATER Lab Sample ID: 2435317

Sample wt/vol: 250 (g/mL) ML Lab File ID: R5341.D

Level: (low/med) LOW Date Received: 07/08/95

% Moisture: not dec. 0 dec. Date Extracted: 07/11/95

Extraction: (SepF/Cont/Sonc) SEPF Date Analyzed: 07/14/95

GPC Cleanup: (Y/N) N pH: 5.0 Dilution Factor: 1.0

CAS NO.	COMPOUND	CONCENTRATION UNITS: (mg/L or mg/Kg) MG/L	Q
95-48-7	2-Methylphenol	0.04	U
	3+4-Methylphenol	0.08	U
121-14-2	2,4-Dinitrotoluene	0.04	U
118-74-1	Hexachlorobenzene	0.04	U
87-68-3	Hexachlorobutadiene	0.04	U
67-72-1	Hexachloroethane	0.04	U
98-95-3	Nitrobenzene	0.04	U
87-86-5	Pentachlorophenol	0.20	U
110-86-1	Pyridine	0.04	U
95-95-4	2,4,5-Trichlorophenol	0.04	U
88-06-2	2,4,6-Trichlorophenol	0.04	U
106-46-7	1,4-Dichlorobenzene	0.04	U

1B
SEMIVOLATILE ORGANICS ANALYSIS DATA SHEET

EPA SAMPLE NO.

A2-8

Lab Name: NYTEST ENV INC Contract: 9521852

Lab Code: NYTEST Case No.: 24353 SAS No.: SDG No.: 24353

Matrix: (soil/water) WATER Lab Sample ID: 2435318

Sample wt/vol: 250 (g/mL) ML Lab File ID: R5342.D

Level: (low/med) LOW Date Received: 07/08/95

% Moisture: not dec. 0 dec. Date Extracted: 07/11/95

Extraction: (SepF/Cont/Sonc) SEPF Date Analyzed: 07/14/95

GPC Cleanup: (Y/N) N pH: 5.0 Dilution Factor: 1.0

CAS NO.	COMPOUND	CONCENTRATION UNITS: (mg/L or mg/Kg) MG/L	Q
95-48-7	2-Methylphenol	0.04	U
	3+4-Methylphenol	0.08	U
121-14-2	2,4-Dinitrotoluene	0.04	U
118-74-1	Hexachlorobenzene	0.04	U
87-68-3	Hexachlorobutadiene	0.04	U
67-72-1	Hexachloroethane	0.04	U
98-95-3	Nitrobenzene	0.04	U
87-86-5	Pentachlorophenol	0.20	U
110-86-1	Pyridine	0.04	U
95-95-4	2,4,5-Trichlorophenol	0.04	U
88-06-2	2,4,6-Trichlorophenol	0.04	U
106-46-7	1,4-Dichlorobenzene	0.04	U

1B
SEMIVOLATILE ORGANICS ANALYSIS DATA SHEET

EPA SAMPLE NO.

A2-9

Lab Name: NYTEST ENV INC Contract: 9521852

Lab Code: NYTEST Case No.: 24353 SAS No.: SDG No.: 24353

Matrix: (soil/water) WATER Lab Sample ID: 2435319

Sample wt/vol: 250 (g/mL) ML Lab File ID: R5343.D

Level: (low/med) LOW Date Received: 07/08/95

% Moisture: not dec. 0 dec. Date Extracted: 07/11/95

Extraction: (SepF/Cont/Sonc) SEPF Date Analyzed: 07/14/95

GPC Cleanup: (Y/N) N pH: 5.0 Dilution Factor: 1.0

CAS NO.	COMPOUND	CONCENTRATION UNITS: (mg/L or mg/Kg) MG/L	Q
95-48-7	2-Methylphenol	0.04	U
	3+4-Methylphenol	0.08	U
121-14-2	2,4-Dinitrotoluene	0.04	U
118-74-1	Hexachlorobenzene	0.04	U
87-68-3	Hexachlorobutadiene	0.04	U
67-72-1	Hexachloroethane	0.04	U
98-95-3	Nitrobenzene	0.04	U
87-86-5	Pentachlorophenol	0.20	U
110-86-1	Pyridine	0.04	U
95-95-4	2,4,5-Trichlorophenol	0.04	U
88-06-2	2,4,6-Trichlorophenol	0.04	U
106-46-7	1,4-Dichlorobenzene	0.04	U

1B
SEMIVOLATILE ORGANICS ANALYSIS DATA SHEET

EPA SAMPLE NO.

A2-10

Lab Name: NYTEST ENV INC Contract: 9521852

Lab Code: NYTEST Case No.: 24353 SAS No.: SDG No.: 24353

Matrix: (soil/water) WATER Lab Sample ID: 2435320

Sample wt/vol: 250 (g/mL) ML Lab File ID: R5346.D

Level: (low/med) LOW Date Received: 07/08/95

% Moisture: not dec. 0 dec. Date Extracted: 07/11/95

Extraction: (SepF/Cont/Sonc) SEPF Date Analyzed: 07/14/95

GPC Cleanup: (Y/N) N pH: 5.0 Dilution Factor: 1.0

CAS NO.	COMPOUND	CONCENTRATION UNITS: (mg/L or mg/Kg) MG/L	Q
95-48-7	2-Methylphenol	0.04	U
	3+4-Methylphenol	0.08	U
121-14-2	2,4-Dinitrotoluene	0.04	U
118-74-1	Hexachlorobenzene	0.04	U
87-68-3	Hexachlorobutadiene	0.04	U
67-72-1	Hexachloroethane	0.04	U
98-95-3	Nitrobenzene	0.04	U
87-86-5	Pentachlorophenol	0.20	U
110-86-1	Pyridine	0.04	U
95-95-4	2,4,5-Trichlorophenol	0.04	U
88-06-2	2,4,6-Trichlorophenol	0.04	U
106-46-7	1,4-Dichlorobenzene	0.04	U

1B
SEMIVOLATILE ORGANICS ANALYSIS DATA SHEET

EPA SAMPLE NO.

A3-1

Lab Name: NYTEST ENV INC Contract: 9521852

Lab Code: NYTEST Case No.: 24353 SAS No.: SDG No.: 24353

Matrix: (soil/water) WATER Lab Sample ID: 2435306

Sample wt/vol: 250 (g/mL) ML Lab File ID: R5366.D

Level: (low/med) LOW Date Received: 07/08/95

% Moisture: not dec. 0 dec. Date Extracted: 07/14/95

Extraction: (SepF/Cont/Sonc) SEPF Date Analyzed: 07/14/95

GPC Cleanup: (Y/N) N pH: 5.0 Dilution Factor: 1.0

CAS NO.	COMPOUND	CONCENTRATION UNITS: (mg/L or mg/Kg) MG/L	Q
95-48-7	2-Methylphenol	0.04	U
	3+4-Methylphenol	0.08	U
121-14-2	2,4-Dinitrotoluene	0.04	U
118-74-1	Hexachlorobenzene	0.04	U
87-68-3	Hexachlorobutadiene	0.04	U
67-72-1	Hexachloroethane	0.04	U
98-95-3	Nitrobenzene	0.04	U
87-86-5	Pentachlorophenol	0.20	U
110-86-1	Pyridine	0.04	U
95-95-4	2,4,5-Trichlorophenol	0.04	U
88-06-2	2,4,6-Trichlorophenol	0.04	U
106-46-7	1,4-Dichlorobenzene	0.04	U

1B
SEMIVOLATILE ORGANICS ANALYSIS DATA SHEET

EPA SAMPLE NO.

A3-2

Lab Name: NYTEST ENV INC Contract: 9521852

Lab Code: NYTEST Case No.: 24353 SAS No.: SDG No.: 24353

Matrix: (soil/water) WATER Lab Sample ID: 2435307

Sample wt/vol: 250 (g/mL) ML Lab File ID: R5367.D

Level: (low/med) LOW Date Received: 07/08/95

% Moisture: not dec. 0 dec. Date Extracted: 07/14/95

Extraction: (SepF/Cont/Sonc) SEPF Date Analyzed: 07/14/95

GPC Cleanup: (Y/N) N pH: 5.0 Dilution Factor: 1.0

CAS NO.	COMPOUND	CONCENTRATION UNITS: (mg/L or mg/Kg) MG/L	Q
95-48-7	2-Methylphenol	0.04	U
	3+4-Methylphenol	0.08	U
121-14-2	2,4-Dinitrotoluene	0.04	U
118-74-1	Hexachlorobenzene	0.04	U
87-68-3	Hexachlorobutadiene	0.04	U
67-72-1	Hexachloroethane	0.04	U
98-95-3	Nitrobenzene	0.04	U
87-86-5	Pentachlorophenol	0.20	U
110-86-1	Pyridine	0.04	U
95-95-4	2,4,5-Trichlorophenol	0.04	U
88-06-2	2,4,6-Trichlorophenol	0.04	U
106-46-7	1,4-Dichlorobenzene	0.04	U

1B
SEMIVOLATILE ORGANICS ANALYSIS DATA SHEET

EPA SAMPLE NO.

A3-3

Lab Name: NYTEST ENV INC Contract: 9521852

Lab Code: NYTEST Case No.: 24353 SAS No.: SDG No.: 24353

Matrix: (soil/water) WATER Lab Sample ID: 2435308

Sample wt/vol: 250 (g/mL) ML Lab File ID: R5328.D

Level: (low/med) LOW Date Received: 07/08/95

% Moisture: not dec. 0 dec. Date Extracted: 07/11/95

Extraction: (SepF/Cont/Sonc) SEPF Date Analyzed: 07/13/95

GPC Cleanup: (Y/N) N pH: 5.0 Dilution Factor: 1.0

CAS NO.	COMPOUND	CONCENTRATION UNITS: (mg/L or mg/Kg) MG/L	Q
95-48-7	2-Methylphenol	0.04	U
	3+4-Methylphenol	0.08	U
121-14-2	2,4-Dinitrotoluene	0.04	U
118-74-1	Hexachlorobenzene	0.04	U
87-68-3	Hexachlorobutadiene	0.04	U
67-72-1	Hexachloroethane	0.04	U
98-95-3	Nitrobenzene	0.04	U
87-86-5	Pentachlorophenol	0.20	U
110-86-1	Pyridine	0.04	U
95-95-4	2,4,5-Trichlorophenol	0.04	U
88-06-2	2,4,6-Trichlorophenol	0.04	U
106-46-7	1,4-Dichlorobenzene	0.04	U

1B
SEMIVOLATILE ORGANICS ANALYSIS DATA SHEET

EPA SAMPLE NO.

A3-3RE

Lab Name: NYTEST ENV INC Contract: 9521852

Lab Code: NYTEST Case No.: 24353 SAS No.: SDG No.: 24353

Matrix: (soil/water) WATER Lab Sample ID: 2435308

Sample wt/vol: 250 (g/mL) ML Lab File ID: R5368.D

Level: (low/med) LOW Date Received: 07/08/95

% Moisture: not dec. 0 dec. Date Extracted: 07/14/95

Extraction: (SepF/Cont/Sonc) SEPF Date Analyzed: 07/14/95

GPC Cleanup: (Y/N) N pH: 5.0 Dilution Factor: 1.0

CAS NO.	COMPOUND	CONCENTRATION UNITS: (mg/L or mg/Kg) MG/L	Q
95-48-7	2-Methylphenol	0.04	U
	3+4-Methylphenol	0.08	U
121-14-2	2,4-Dinitrotoluene	0.04	U
118-74-1	Hexachlorobenzene	0.04	U
87-68-3	Hexachlorobutadiene	0.04	U
67-72-1	Hexachloroethane	0.04	U
98-95-3	Nitrobenzene	0.04	U
87-86-5	Pentachlorophenol	0.20	U
110-86-1	Pyridine	0.04	U
95-95-4	2,4,5-Trichlorophenol	0.04	U
88-06-2	2,4,6-Trichlorophenol	0.04	U
106-46-7	1,4-Dichlorobenzene	0.04	U

1B
SEMIVOLATILE ORGANICS ANALYSIS DATA SHEET

EPA SAMPLE NO.

A3-4

Lab Name: NYTEST ENV INC Contract: 9521852

Lab Code: NYTEST Case No.: 24353 SAS No.: SDG No.: 24353

Matrix: (soil/water) WATER Lab Sample ID: 2435309

Sample wt/vol: 250 (g/mL) ML Lab File ID: R5369.D

Level: (low/med) LOW Date Received: 07/08/95

% Moisture: not dec. 0 dec. Date Extracted: 07/14/95

Extraction: (SepF/Cont/Sonc) SEPF Date Analyzed: 07/14/95

GPC Cleanup: (Y/N) N pH: 5.0 Dilution Factor: 1.0

CAS NO.	COMPOUND	CONCENTRATION UNITS: (mg/L or mg/Kg) MG/L	Q
95-48-7	2-Methylphenol	0.04	U
	3+4-Methylphenol	0.08	U
121-14-2	2,4-Dinitrotoluene	0.04	U
118-74-1	Hexachlorobenzene	0.04	U
87-68-3	Hexachlorobutadiene	0.04	U
67-72-1	Hexachloroethane	0.04	U
98-95-3	Nitrobenzene	0.04	U
87-86-5	Pentachlorophenol	0.20	U
110-86-1	Pyridine	0.04	U
95-95-4	2,4,5-Trichlorophenol	0.04	U
88-06-2	2,4,6-Trichlorophenol	0.04	U
106-46-7	1,4-Dichlorobenzene	0.04	U

1B
SEMIVOLATILE ORGANICS ANALYSIS DATA SHEET

EPA SAMPLE NO.

A3-5

Lab Name: NYTEST ENV INC Contract: 9521852

Lab Code: NYTEST Case No.: 24353 SAS No.: SDG No.: 24353

Matrix: (soil/water) WATER Lab Sample ID: 2435310

Sample wt/vol: 250 (g/mL) ML Lab File ID: R5370.D

Level: (low/med) LOW Date Received: 07/08/95

% Moisture: not dec. 0 dec. Date Extracted: 07/14/95

Extraction: (SepF/Cont/Sonc) SEPF Date Analyzed: 07/14/95

GPC Cleanup: (Y/N) N pH: 5.0 Dilution Factor: 1.0

CAS NO.	COMPOUND	CONCENTRATION UNITS: (mg/L or mg/Kg) MG/L	Q
95-48-7	2-Methylphenol	0.04	U
	3+4-Methylphenol	0.08	U
121-14-2	2,4-Dinitrotoluene	0.04	U
118-74-1	Hexachlorobenzene	0.04	U
87-68-3	Hexachlorobutadiene	0.04	U
67-72-1	Hexachloroethane	0.04	U
98-95-3	Nitrobenzene	0.04	U
87-86-5	Pentachlorophenol	0.20	U
110-86-1	Pyridine	0.04	U
95-95-4	2,4,5-Trichlorophenol	0.04	U
88-06-2	2,4,6-Trichlorophenol	0.04	U
106-46-7	1,4-Dichlorobenzene	0.04	U

1B
SEMIVOLATILE ORGANICS ANALYSIS DATA SHEET

EPA SAMPLE NO.

A3-6

Lab Name: NYTEST ENV INC Contract: 9521852

Lab Code: NYTEST Case No.: 24353 SAS No.: SDG No.: 24353

Matrix: (soil/water) WATER Lab Sample ID: 2435301

Sample wt/vol: 250 (g/mL) ML Lab File ID: R5361.D

Level: (low/med) LOW Date Received: 07/08/95

% Moisture: not dec. 0 dec. Date Extracted: 07/14/95

Extraction: (SepF/Cont/Sonc) SEPF Date Analyzed: 07/14/95

GPC Cleanup: (Y/N) N pH: 5.0 Dilution Factor: 1.0

CAS NO.	COMPOUND	CONCENTRATION UNITS: (mg/L or mg/Kg) MG/L	Q
95-48-7	2-Methylphenol	0.04	U
	3+4-Methylphenol	0.08	U
121-14-2	2,4-Dinitrotoluene	0.04	U
118-74-1	Hexachlorobenzene	0.04	U
87-68-3	Hexachlorobutadiene	0.04	U
67-72-1	Hexachloroethane	0.04	U
98-95-3	Nitrobenzene	0.04	U
87-86-5	Pentachlorophenol	0.20	U
110-86-1	Pyridine	0.04	U
95-95-4	2,4,5-Trichlorophenol	0.04	U
88-06-2	2,4,6-Trichlorophenol	0.04	U
106-46-7	1,4-Dichlorobenzene	0.04	U

PCB Data

PCB - FORM 1

NYTEST ENVIRONMENTAL INC.

TCL PCB ORGANICS ANALYSIS DATA SHEET

SAMPLE MATRIX:	SOIL	SAMPLE ID:	A1-1
CONC. LEVEL:	MED	LAB SAMPLE ID:	2435302
EXTRACTION DATE:	07/10/95	DIL FACTOR:	1.00
ANALYSIS DATE:	07/11/95	% MOISTURE:	5

CMPD #	CAS Number	PCB COMPOUND	MG/KG (DRY BASIS)
1	12674-11-2	Aroclor-1016	1.1 U
2	11104-28-2	Aroclor-1221	1.1 U
3	11141-16-5	Aroclor-1232	1.1 U
4	53469-21-9	Aroclor-1242	1.1 U
5	12672-29-6	Aroclor-1248	1.1 U
6	11097-69-1	Aroclor-1254	1.1 U
7	11096-82-5	Aroclor-1260	0.9 J

PCB - FORM 1

NYTEST ENVIRONMENTAL INC.

TCL PCB ORGANICS ANALYSIS DATA SHEET

SAMPLE MATRIX:	SOIL	SAMPLE ID:	A1-2
CONC. LEVEL:	MED	LAB SAMPLE ID:	2435303
EXTRACTION DATE:	07/10/95	DIL FACTOR:	1.00
ANALYSIS DATE:	07/11/95	% MOISTURE:	13

CMPD #	CAS Number	PCB COMPOUND	MG/KG (DRY BASIS)
1	12674-11-2	Aroclor-1016	1.1 U
2	11104-28-2	Aroclor-1221	1.1 U
3	11141-16-5	Aroclor-1232	1.1 U
4	53469-21-9	Aroclor-1242	1.1 U
5	12672-29-6	Aroclor-1248	1.1 U
6	11097-69-1	Aroclor-1254	1.1 U
7	11096-82-5	Aroclor-1260	1.1 U

PCB - FORM 1

NYTEST ENVIRONMENTAL INC.

TCL PCB ORGANICS ANALYSIS DATA SHEET

SAMPLE MATRIX:	SOIL	SAMPLE ID:	A1-3
CONC. LEVEL:	MED	LAB SAMPLE ID:	2435304
EXTRACTION DATE:	07/10/95	DIL FACTOR:	1.00
ANALYSIS DATE:	07/12/95	% MOISTURE:	5

CMPD #	CAS Number	PCB COMPOUND	MG/KG (DRY BASIS)
1	12674-11-2	Aroclor-1016	1.1 U
2	11104-28-2	Aroclor-1221	1.1 U
3	11141-16-5	Aroclor-1232	1.1 U
4	53469-21-9	Aroclor-1242	1.1 U
5	12672-29-6	Aroclor-1248	1.1 U
6	11097-69-1	Aroclor-1254	1.1 U
7	11096-82-5	Aroclor-1260	1.1 U

PCB - FORM 1

NYTEST ENVIRONMENTAL INC.

TCL PCB ORGANICS ANALYSIS DATA SHEET

SAMPLE MATRIX:	SOIL	SAMPLE ID:	A1-4
CONC. LEVEL:	MED	LAB SAMPLE ID:	2435305
EXTRACTION DATE:	07/10/95	DIL FACTOR:	1.00
ANALYSIS DATE:	07/11/95	% MOISTURE:	6

CMPD #	CAS Number	PCB COMPOUND	MG/KG (DRY BASIS)
1	12674-11-2	Aroclor-1016	1.1 U
2	11104-28-2	Aroclor-1221	1.1 U
3	11141-16-5	Aroclor-1232	1.1 U
4	53469-21-9	Aroclor-1242	1.1 U
5	12672-29-6	Aroclor-1248	1.1 U
6	11097-69-1	Aroclor-1254	1.1 U
7	11096-82-5	Aroclor-1260	1.1 U

PCB - FORM 1

NYTEST ENVIRONMENTAL INC.

TCL PCB ORGANICS ANALYSIS DATA SHEET

SAMPLE MATRIX:	SOIL	SAMPLE ID:	A2-1
CONC. LEVEL:	MED	LAB SAMPLE ID:	2435311
EXTRACTION DATE:	07/10/95	DIL FACTOR:	1.00
ANALYSIS DATE:	07/11/95	% MOISTURE:	7

CMPD #	CAS Number	PCB COMPOUND	MG/KG (DRY BASIS)
1	12674-11-2	Aroclor-1016	1.1 U
2	11104-28-2	Aroclor-1221	1.1 U
3	11141-16-5	Aroclor-1232	1.1 U
4	53469-21-9	Aroclor-1242	1.1 U
5	12672-29-6	Aroclor-1248	1.1 U
6	11097-69-1	Aroclor-1254	1.1 U
7	11096-82-5	Aroclor-1260	1.1 U

PCB - FORM 1

NYTEST ENVIRONMENTAL INC.

TCL PCB ORGANICS ANALYSIS DATA SHEET

SAMPLE MATRIX:	SOIL	SAMPLE ID:	A2-2
CONC. LEVEL:	MED	LAB SAMPLE ID:	2435312
EXTRACTION DATE:	07/10/95	DIL FACTOR:	1.00
ANALYSIS DATE:	07/12/95	% MOISTURE:	12

CMPD #	CAS Number	PCB COMPOUND	MG/KG (DRY BASIS)
1	12674-11-2	Aroclor-1016	1.1 U
2	11104-28-2	Aroclor-1221	1.1 U
3	11141-16-5	Aroclor-1232	1.1 U
4	53469-21-9	Aroclor-1242	1.1 U
5	12672-29-6	Aroclor-1248	1.1 U
6	11097-69-1	Aroclor-1254	1.1 U
7	11096-82-5	Aroclor-1260	1.1 U

PCB - FORM 1

NYTEST ENVIRONMENTAL INC.

TCL PCB ORGANICS ANALYSIS DATA SHEET

SAMPLE MATRIX:	SOIL	SAMPLE ID:	A2-3
CONC. LEVEL:	MED	LAB SAMPLE ID:	2435313
EXTRACTION DATE:	07/10/95	DIL FACTOR:	1.00
ANALYSIS DATE:	07/11/95	% MOISTURE:	5

CMPD #	CAS Number	PCB COMPOUND	MG/KG (DRY BASIS)
1	12674-11-2	Aroclor-1016	1.1 U
2	11104-28-2	Aroclor-1221	1.1 U
3	11141-16-5	Aroclor-1232	1.1 U
4	53469-21-9	Aroclor-1242	1.1 U
5	12672-29-6	Aroclor-1248	1.1 U
6	11097-69-1	Aroclor-1254	1.1 U
7	11096-82-5	Aroclor-1260	1.1 U

PCB - FORM 1

NYTEST ENVIRONMENTAL INC.

TCL PCB ORGANICS ANALYSIS DATA SHEET

SAMPLE MATRIX:	SOIL	SAMPLE ID:	A2-4
CONC. LEVEL:	MED	LAB SAMPLE ID:	2435314
EXTRACTION DATE:	07/10/95	DIL FACTOR:	1.00
ANALYSIS DATE:	07/11/95	% MOISTURE:	5

CMPD #	CAS Number	PCB COMPOUND	MG/KG (DRY BASIS)
1	12674-11-2	Aroclor-1016	1.1 U
2	11104-28-2	Aroclor-1221	1.1 U
3	11141-16-5	Aroclor-1232	1.1 U
4	53469-21-9	Aroclor-1242	1.1 U
5	12672-29-6	Aroclor-1248	1.1 U
6	11097-69-1	Aroclor-1254	1.1 U
7	11096-82-5	Aroclor-1260	1.1 U

PCB - FORM 1

NYTEST ENVIRONMENTAL INC.

TCL PCB ORGANICS ANALYSIS DATA SHEET

SAMPLE MATRIX:	SOIL	SAMPLE ID:	A2-5
CONC. LEVEL:	MED	LAB SAMPLE ID:	2435315
EXTRACTION DATE:	07/10/95	DIL FACTOR:	1.00
ANALYSIS DATE:	07/11/95	% MOISTURE:	9

CMPD #	CAS Number	PCB COMPOUND	MG/KG (DRY BASIS)
1	12674-11-2	Aroclor-1016	1.1 U
2	11104-28-2	Aroclor-1221	1.1 U
3	11141-16-5	Aroclor-1232	1.1 U
4	53469-21-9	Aroclor-1242	1.1 U
5	12672-29-6	Aroclor-1248	1.1 U
6	11097-69-1	Aroclor-1254	1.1 U
7	11096-82-5	Aroclor-1260	1.1 U

PCB - FORM 1

NYTEST ENVIRONMENTAL INC.

TCL PCB ORGANICS ANALYSIS DATA SHEET

SAMPLE MATRIX:	SOIL	SAMPLE ID:	A2-6
CONC. LEVEL:	MED	LAB SAMPLE ID:	2435316
EXTRACTION DATE:	07/10/95	DIL FACTOR:	1.00
ANALYSIS DATE:	07/11/95	% MOISTURE:	7

CMPD #	CAS Number	PCB COMPOUND	MG/KG (DRY BASIS)
1	12674-11-2	Aroclor-1016	1.1 U
2	11104-28-2	Aroclor-1221	1.1 U
3	11141-16-5	Aroclor-1232	1.1 U
4	53469-21-9	Aroclor-1242	1.1 U
5	12672-29-6	Aroclor-1248	1.1 U
6	11097-69-1	Aroclor-1254	1.1 U
7	11096-82-5	Aroclor-1260	1.1 U

PCB - FORM 1

NYTEST ENVIRONMENTAL INC.

TCL PCB ORGANICS ANALYSIS DATA SHEET

SAMPLE MATRIX:	SOIL	SAMPLE ID:	A2-7
CONC. LEVEL:	MED	LAB SAMPLE ID:	2435317
EXTRACTION DATE:	07/10/95	DIL FACTOR:	1.00
ANALYSIS DATE:	07/11/95	% MOISTURE:	4

CMPD #	CAS Number	PCB COMPOUND	MG/KG (DRY BASIS)
1	12674-11-2	Aroclor-1016	1.0 U
2	11104-28-2	Aroclor-1221	1.0 U
3	11141-16-5	Aroclor-1232	1.0 U
4	53469-21-9	Aroclor-1242	1.0 U
5	12672-29-6	Aroclor-1248	1.0 U
6	11097-69-1	Aroclor-1254	1.0 U
7	11096-82-5	Aroclor-1260	1.0 U

PCB - FORM 1

NYTEST ENVIRONMENTAL INC.

TCL PCB ORGANICS ANALYSIS DATA SHEET

SAMPLE MATRIX:	SOIL	SAMPLE ID:	A2-8
CONC. LEVEL:	MED	LAB SAMPLE ID:	2435318
EXTRACTION DATE:	07/10/95	DIL FACTOR:	1.00
ANALYSIS DATE:	07/11/95	% MOISTURE:	9

CMPD #	CAS Number	PCB COMPOUND	MG/KG (DRY BASIS)
1	12674-11-2	Aroclor-1016	1.1 U
2	11104-28-2	Aroclor-1221	1.1 U
3	11141-16-5	Aroclor-1232	1.1 U
4	53469-21-9	Aroclor-1242	1.1 U
5	12672-29-6	Aroclor-1248	1.1 U
6	11097-69-1	Aroclor-1254	1.1 U
7	11096-82-5	Aroclor-1260	1.1 U

PCB - FORM 1

NYTEST ENVIRONMENTAL INC.

TCL PCB ORGANICS ANALYSIS DATA SHEET

SAMPLE MATRIX:	SOIL	SAMPLE ID:	A2-9
CONC. LEVEL:	MED	LAB SAMPLE ID:	2435319
EXTRACTION DATE:	07/10/95	DIL FACTOR:	1.00
ANALYSIS DATE:	07/11/95	% MOISTURE:	5

CMPD #	CAS Number	PCB COMPOUND	MG/KG (DRY BASIS)
1	12674-11-2	Aroclor-1016	1.1 U
2	11104-28-2	Aroclor-1221	1.1 U
3	11141-16-5	Aroclor-1232	1.1 U
4	53469-21-9	Aroclor-1242	1.1 U
5	12672-29-6	Aroclor-1248	1.1 U
6	11097-69-1	Aroclor-1254	1.1 U
7	11096-82-5	Aroclor-1260	1.1 U

PCB - FORM 1

NYTEST ENVIRONMENTAL INC.

TCL PCB ORGANICS ANALYSIS DATA SHEET

SAMPLE MATRIX:	SOIL	SAMPLE ID:	A2-10
CONC. LEVEL:	MED	LAB SAMPLE ID:	2435320
EXTRACTION DATE:	07/10/95	DIL FACTOR:	1.00
ANALYSIS DATE:	07/11/95	% MOISTURE:	6

CMPD #	CAS Number	PCB COMPOUND	MG/KG (DRY BASIS)
1	12674-11-2	Aroclor-1016	1.1 U
2	11104-28-2	Aroclor-1221	1.1 U
3	11141-16-5	Aroclor-1232	1.1 U
4	53469-21-9	Aroclor-1242	1.1 U
5	12672-29-6	Aroclor-1248	1.1 U
6	11097-69-1	Aroclor-1254	1.1 U
7	11096-82-5	Aroclor-1260	1.1 U

PCB - FORM 1

NYTEST ENVIRONMENTAL INC.

TCL PCB ORGANICS ANALYSIS DATA SHEET

SAMPLE MATRIX:	SOIL	SAMPLE ID:	A3-1
CONC. LEVEL:	MED	LAB SAMPLE ID:	2435306
EXTRACTION DATE:	07/10/95	DIL FACTOR:	1.00
ANALYSIS DATE:	07/11/95	% MOISTURE:	9

CMPD #	CAS Number	PCB COMPOUND	MG/KG (DRY BASIS)
1	12674-11-2	Aroclor-1016	1.1 U
2	11104-28-2	Aroclor-1221	1.1 U
3	11141-16-5	Aroclor-1232	1.1 U
4	53469-21-9	Aroclor-1242	1.1 U
5	12672-29-6	Aroclor-1248	1.1 U
6	11097-69-1	Aroclor-1254	1.1 U
7	11096-82-5	Aroclor-1260	1.1 U

PCB - FORM 1

NYTEST ENVIRONMENTAL INC.

TCL PCB ORGANICS ANALYSIS DATA SHEET

SAMPLE MATRIX:	SOIL	SAMPLE ID:	A3-2
CONC. LEVEL:	MED	LAB SAMPLE ID:	2435307
EXTRACTION DATE:	07/10/95	DIL FACTOR:	1.00
ANALYSIS DATE:	07/11/95	% MOISTURE:	5

CMPD #	CAS Number	PCB COMPOUND	MG/KG (DRY BASIS)
1	12674-11-2	Aroclor-1016	1.1 U
2	11104-28-2	Aroclor-1221	1.1 U
3	11141-16-5	Aroclor-1232	1.1 U
4	53469-21-9	Aroclor-1242	1.1 U
5	12672-29-6	Aroclor-1248	1.1 U
6	11097-69-1	Aroclor-1254	1.1 U
7	11096-82-5	Aroclor-1260	0.5 J

PCB - FORM 1

NYTEST ENVIRONMENTAL INC.

TCL PCB ORGANICS ANALYSIS DATA SHEET

SAMPLE MATRIX:	SOIL	SAMPLE ID:	A3-3
CONC. LEVEL:	MED	LAB SAMPLE ID:	2435308
EXTRACTION DATE:	07/10/95	DIL FACTOR:	1.00
ANALYSIS DATE:	07/11/95	% MOISTURE:	6

CMPD #	CAS Number	PCB COMPOUND	MG/KG (DRY BASIS)
1	12674-11-2	Aroclor-1016	1.1 U
2	11104-28-2	Aroclor-1221	1.1 U
3	11141-16-5	Aroclor-1232	1.1 U
4	53469-21-9	Aroclor-1242	1.1 U
5	12672-29-6	Aroclor-1248	1.1 U
6	11097-69-1	Aroclor-1254	1.1 U
7	11096-82-5	Aroclor-1260	1.1 U

PCB - FORM 1

NYTEST ENVIRONMENTAL INC.

TCL PCB ORGANICS ANALYSIS DATA SHEET

SAMPLE MATRIX:	SOIL	SAMPLE ID:	A3-4
CONC. LEVEL:	MED	LAB SAMPLE ID:	2435309
EXTRACTION DATE:	07/10/95	DIL FACTOR:	1.00
ANALYSIS DATE:	07/11/95	% MOISTURE:	11

CMPD #	CAS Number	PCB COMPOUND	MG/KG (DRY BASIS)
1	12674-11-2	Aroclor-1016	1.1 U
2	11104-28-2	Aroclor-1221	1.1 U
3	11141-16-5	Aroclor-1232	1.1 U
4	53469-21-9	Aroclor-1242	1.1 U
5	12672-29-6	Aroclor-1248	1.1 U
6	11097-69-1	Aroclor-1254	1.1 U
7	11096-82-5	Aroclor-1260	1.1 U

PCB - FORM 1

NYTEST ENVIRONMENTAL INC.

TCL PCB ORGANICS ANALYSIS DATA SHEET

SAMPLE MATRIX:	SOIL	SAMPLE ID:	A3-5
CONC. LEVEL:	MED	LAB SAMPLE ID:	2435310
EXTRACTION DATE:	07/10/95	DIL FACTOR:	1.00
ANALYSIS DATE:	07/11/95	% MOISTURE:	8

CMPD #	CAS Number	PCB COMPOUND	MG/KG (DRY BASIS)
1	12674-11-2	Aroclor-1016	1.1 U
2	11104-28-2	Aroclor-1221	1.1 U
3	11141-16-5	Aroclor-1232	1.1 U
4	53469-21-9	Aroclor-1242	1.1 U
5	12672-29-6	Aroclor-1248	1.1 U
6	11097-69-1	Aroclor-1254	1.1 U
7	11096-82-5	Aroclor-1260	1.1 U

PCB - FORM 1

NYTEST ENVIRONMENTAL INC.

TCL PCB ORGANICS ANALYSIS DATA SHEET

SAMPLE MATRIX:	SOIL	SAMPLE ID:	A3-6
CONC. LEVEL:	MED	LAB SAMPLE ID:	2435301
EXTRACTION DATE:	07/10/95	DIL FACTOR:	1.00
ANALYSIS DATE:	07/11/95	% MOISTURE:	9

CMPD #	CAS Number	PCB COMPOUND	MG/KG (DRY BASIS)
1	12674-11-2	Aroclor-1016	1.1 U
2	11104-28-2	Aroclor-1221	1.1 U
3	11141-16-5	Aroclor-1232	1.1 U
4	53469-21-9	Aroclor-1242	1.1 U
5	12672-29-6	Aroclor-1248	1.1 U
6	11097-69-1	Aroclor-1254	1.1 U
7	11096-82-5	Aroclor-1260	1.1 U

GC Gas Data

GC GAS
REPORT OF ANALYSIS

Login No.: 24353

We find as follows:

Results in ppm, mg/kg (Dry Wt.): Matrix : SOIL

Parameter(s)	Sample Identification				
Sample ID	A3-6	A1-1	A1-2	A1-3	A1-4
Lab ID	2435301	2435302	2435303	2435304	2435305
Date Received	07/08/95	07/08/95	07/08/95	07/08/95	07/08/95
Date Analyzed	07/08/95	07/08/95	07/08/95	07/08/95	07/08/95
% Moisture	9	5	13	5	6
Dilution factor	1	1	1	1	1
Gasoline	0.11 U	0.11 U	0.11 U	0.11 U	0.11 U
TPH (as Gasoline)	ND	ND	ND	ND	ND

ND = Not Detected

* TPH (as Gasoline) = Total Volatile hydrocarbons quantitated as gasoline, however, peak pattern does not match that of the Gasoline reference standard.

GC GAS
REPORT OF ANALYSIS

Login No.: 24353

We find as follows:

Results in ppm, mg/kg (Dry Wt.): Matrix : SOIL

Parameter(s)	Sample Identification				
Sample ID	A3-1	A3-2	A3-3	A3-4	A3-5
Lab ID	2435306	2435307	2435308	2435309	2435310
Date Received	07/08/95	07/08/95	07/08/95	07/08/95	07/08/95
Date Analyzed	07/11/95	07/11/95	07/12/95	07/11/95	07/11/95
% Moisture	9	5	6	11	8
Dilution factor	1	1	1	1	1
Gasoline	0.11 U	0.11 U	0.11 U	0.11 U	0.11 U
TPH (as Gasoline)	ND	ND	0.10 J	0.07 J	0.63

ND = Not Detected

* TPH (as Gasoline) = Total Volatile hydrocarbons quantitated as gasoline, however, peak pattern does not match that of the Gasoline reference standard.

GC GAS
REPORT OF ANALYSIS

Login No.: 24353

We find as follows:

Results in ppm, mg/kg (Dry Wt.): Matrix : SOIL

Parameter(s)	Sample Identification				
Sample ID	A2-1	A2-2	A2-3	A2-4	A2-5
Lab ID	2435311	2435312	2435313	2435314	2435315
Date Received	07/08/95	07/08/95	07/08/95	07/08/95	07/08/95
Date Analyzed	07/11/95	07/11/95	07/12/95	07/13/95	07/11/95
% Moisture	7	12	5	5	9
Dilution factor	1	1	1	5	1
Gasoline	0.11 U	0.11 U	0.11 U	0.53 U	0.11 U
TPH (as Gasoline)	ND	0.12	ND	2.80	ND

ND = Not Detected

* TPH (as Gasoline) = Total Volatile hydrocarbons quantitated as gasoline, however, peak pattern does not match that of the Gasoline reference standard.

ac:\123\gc\gc-gas\soil REV 06/95

GC GAS
REPORT OF ANALYSIS

Login No.: 24353

We find as follows:

Results in ppm, mg/kg (Dry Wt.): Matrix : SOIL

Parameter(s)	Sample Identification				
Sample ID	A2-6	A2-7	A2-8	A2-9	A2-10
Lab ID	2435316	2435317	2435318	2435319	243520
Date Received	07/08/95	07/08/95	07/08/95	07/08/95	07/08/95
Date Analyzed	07/12/95	07/12/95	07/13/95	07/12/95	07/12/95
% Moisture	7	4	9	5	6
Dilution factor	1	1	1	1	1
Gasoline	0.11 U	0.10 U	0.11 U	0.11 U	0.11 U
TPH (as Gasoline)	ND	ND	ND	ND	ND

ND = Not Detected

* TPH (as Gasoline) = Total Volatile hydrocarbons quantitated as gasoline, however, peak pattern does not match that of the Gasoline reference standard.

ac:\123\gc\gc-gas\soil REV 06/95

GC Fuel Data

GC FUEL
REPORT OF ANALYSIS

Login No.: 24353

We find as follows:

Results in ppm, mg/kg (Dry wt.): Matrix : SOIL

Parameter(s)	Sample Identification				
Sample ID	A3-6	A1-1	A1-2	A1-3	A1-4
Lab ID	2435301	2435302	2435303	2435304	2435305
Date Extracted	07/10/95	07/10/95	07/10/95	07/10/95	07/10/95
Date Analyzed	07/12/95	07/12/95	07/12/95	07/12/95	07/12/95
% Moisture	9	5	13	5	6
Dilution factor	1	1	1	1	1
#2 Fuel Oil	11 U	11 U	11 U	11 U	11 U
TPH (as #2 Fuel Oil)	ND	230	160	180	150
#6 Fuel Oil	11 U	11 U	11 U	11 U	11 U
TPH (as #6 Fuel Oil)	ND	ND	ND	ND	ND
Lubricating Oil	11 U	11 U	11 U	11 U	11 U
TPH (as Lubricating Oil)	ND	ND	ND	ND	ND
Kerosene	11 U	11 U	11 U	11 U	11 U
TPH (as Kerosene)	ND	ND	ND	ND	ND

ND = Not Detected

* TPH (as...) = Total Petroleum hydrocarbons quantitated as a particular hydrocarbon, however, peak pattern does not match that of the hydrocarbon reference standards.

ac:\123\gc\gc-fuel\soil REV 06/95

GC FUEL
REPORT OF ANALYSIS

Login No.: 24353

We find as follows:

Results in ppm, mg/kg (Dry wt.): Matrix : SOIL

Parameter(s)	Sample Identification				
Sample ID	A3-1	A3-2	A3-3	A3-4	A3-5
Lab ID	2435306	2435307	2435308	2435309	2435310
Date Extracted	07/10/95	07/10/95	07/10/95	07/10/95	07/10/95
Date Analyzed	07/12/95	07/12/95	07/12/95	07/12/95	07/12/95
% Moisture	9	5	6	11	8
Dilution factor	1	1	1	1	1
#2 Fuel Oil	11 U	11 U	11 U	11 U	11 U
TPH (as #2 Fuel Oil)	300	250	220	200	220
#6 Fuel Oil	11 U	11 U	11 U	11 U	11 U
TPH (as #6 Fuel Oil)	ND	ND	ND	ND	ND
Lubricating Oil	11 U	11 U	11 U	11 U	11 U
TPH (as Lubricating Oil)	ND	ND	ND	ND	ND
Kerosene	11 U	11 U	11 U	11 U	11 U
TPH (as Kerosene)	ND	ND	ND	ND	ND

ND = Not Detected

* TPH (as...) = Total Petroleum hydrocarbons quantitated as a particular hydrocarbon, however, peak pattern does not match that of the hydrocarbon reference standards.

GC FUEL
REPORT OF ANALYSIS

Login No.: 24353

We find as follows:

Results in ppm, mg/kg (Dry wt.): Matrix : SOIL

Parameter(s)	Sample Identification				
Sample ID	A2-1	A2-2	A2-3	A2-4	A2-5
Lab ID	2435311	2435312	2435313	2435314	2435315
Date Extracted	07/10/95	07/10/95	07/10/95	07/10/95	07/10/95
Date Analyzed	07/12/95	07/13/95	07/12/95	07/12/95	07/12/95
% Moisture	7	12	5	5	9
Dilution factor	1	20	1	1	1
#2 Fuel Oil	11 U	230 U	11 U	11 U	11 U
TPH (as #2 Fuel Oil)	220	19000	73	190	ND
#6 Fuel Oil	11 U	230 U	11 U	11 U	11 U
TPH (as #6 Fuel Oil)	ND	ND	ND	ND	ND
Lubricating Oil	11 U	230 U	11 U	11 U	11 U
TPH (as Lubricating Oil)	ND	ND	ND	ND	ND
Kerosene	11 U	230 U	11 U	11 U	11 U
TPH (as Kerosene)	ND	ND	ND	ND	ND

ND = Not Detected

* TPH (as...) = Total Petroleum hydrocarbons quantitated as a particular hydrocarbon, however, peak pattern does not match that of the hydrocarbon reference standards.

GC FUEL
REPORT OF ANALYSIS

Login No.: 24353

We find as follows:

Results in ppm, mg/kg (Dry wt.): Matrix : SOIL

Parameter(s)	Sample Identification				
Sample ID	A2-6	A2-7	A2-8	A2-9	A2-10
Lab ID	2435316	2435317	2435318	2435319	2435320
Date Extracted	07/10/95	07/10/95	07/10/95	07/10/95	07/10/95
Date Analyzed	07/13/95	07/13/95	07/13/95	07/13/95	07/13/95
% Moisture	7	4	9	5	6
Dilution factor	1	1	1	1	1
#2 Fuel Oil	11 U	10 U	11 U	11 U	11 U
TPH (as #2 Fuel Oil)	8 J	7 J	ND	72	11
#6 Fuel Oil	11 U	10 U	11 U	11 U	11 U
TPH (as #6 Fuel Oil)	ND	ND	ND	ND	ND
Lubricating Oil	11 U	10 U	11 U	11 U	11 U
TPH (as Lubricating Oil)	ND	ND	ND	ND	ND
Kerosene	11 U	10 U	11 U	11 U	11 U
TPH (as Kerosene)	ND	ND	ND	ND	ND

ND = Not Detected

* TPH (as...) = Total Petroleum hydrocarbons quantitated as a particular hydrocarbon, however, peak pattern does not match that of the hydrocarbon reference standards.

ac:\123\gc\gc-fuel\soil REV 06/95

INORGANIC DATA

U.S. EPA - CLP

1
INORGANIC ANALYSES DATA SHEET

EPA SAMPLE NO.

A1-1

a. Name: NYTEST_ENV_INC_____ Contract: 9521852___

ab Code: NYTEST Case No.: 24353_ SAS No.: _____ SDG No.: 24353_

a rix (soil/water): SOIL_ Lab Sample ID: 435302

evel (low/med): LOW__ Date Received: 07/08/95

Solids: _94.9

Concentration Units (ug/L or mg/kg dry weight): MG/KG

CAS No.	Analyte	Concentration	C	Q	M
7440-38-2	Arsenic__				NR
7440-39-3	Barium___				NR
7440-43-9	Cadmium__				NR
7440-47-3	Chromium_				NR
7439-92-1	Lead_____	387		*	P_
7439-97-6	Mercury__				NR
7782-49-2	Selenium_				NR
7440-22-4	Silver___				NR

Color Before: _____ Clarity Before: _____ Texture: _____

Color After: _____ Clarity After: _____ Artifacts: _____

Comments:
A1-1

FORM I - IN ILM03.0

U.S. EPA - CLP

1

INORGANIC ANALYSES DATA SHEET

EPA SAMPLE NO.

A1-2

Lab Name: NYTEST_ENV_INC_____ Contract: 9521852___

Lab Code: NYTEST Case No.: 24353_ SAS No.: _____ SDG No.: 24353_

Matrix (soil/water): SOIL_ Lab Sample ID: 435303

Level (low/med): LOW__ Date Received: 07/08/95

% Solids: _87.4

Concentration Units (ug/L or mg/kg dry weight): MG/KG

CAS No.	Analyte	Concentration	C	Q	M
7440-38-2	Arsenic__				NR
7440-39-3	Barium___				NR
7440-43-9	Cadmium__				NR
7440-47-3	Chromium_				NR
7439-92-1	Lead_____	171		*	P_
7439-97-6	Mercury__				NR
7782-49-2	Selenium_				NR
7440-22-4	Silver___				NR

Color Before: _____ Clarity Before: _____ Texture: _____

Color After: _____ Clarity After: _____ Artifacts: _____

Comments:

A1-2

FORM I - IN ILM03.0

U.S. EPA - CLP

1
INORGANIC ANALYSES DATA SHEET

EPA SAMPLE NO.

A1-3

Lab Name: NYTEST_ENV_INC_____ Contract: 9521852___

Lab Code: NYTEST Case No.: 24353_ SAS No.: _____ SDG No.: 24353_

Matrix (soil/water): SOIL_ Lab Sample ID: 435304

Level (low/med): LOW__ Date Received: 07/08/95

% Solids: _95.2

Concentration Units (ug/L or mg/kg dry weight): MG/KG

CAS No.	Analyte	Concentration	C	Q	M
7440-38-2	Arsenic__				NR
7440-39-3	Barium___				NR
7440-43-9	Cadmium__				NR
7440-47-3	Chromium_				NR
7439-92-1	Lead_____	484		*	P_
7439-97-6	Mercury__				NR
7782-49-2	Selenium_				NR
7440-22-4	Silver___				NR

Color Before: _____ Clarity Before: _____ Texture: _____

Color After: _____ Clarity After: _____ Artifacts: _____

Comments:
A1-3

FORM I - IN ILM03.0

U.S. EPA - CLP

1
INORGANIC ANALYSES DATA SHEET

EPA SAMPLE NO.

A1-4

al Name: NYTEST_ENV_INC_____ Contract: 9521852___

ab Code: NYTEST Case No.: 24353_ SAS No.: _____ SDG No.: 24353_

at ix (soil/water): SOIL_ Lab Sample ID: 435305

evel (low/med): LOW__ Date Received: 07/08/95

olids: _94.4

Concentration Units (ug/L or mg/kg dry weight): MG/KG

CAS No.	Analyte	Concentration	C	Q	M
7440-38-2	Arsenic__				NR
7440-39-3	Barium___				NR
7440-43-9	Cadmium__				NR
7440-47-3	Chromium_				NR
7439-92-1	Lead_____	242		*	P_
7439-97-6	Mercury__				NR
7782-49-2	Selenium_				NR
7440-22-4	Silver___				NR

ol r Before: _____ Clarity Before: _____ Texture: _____

olor After: _____ Clarity After: _____ Artifacts: _____

omments:
A1-4

FORM I - IN ILM03.0

U.S. EPA - CLP

1

INORGANIC ANALYSES DATA SHEET

EPA SAMPLE NO.

A2-1

b Name: NYTEST_ENV_INC Contract: 9521852

b Code: NYTEST Case No.: 24353 SAS No.: SDG No.: 24353

t: x (soil/water): SOIL Lab Sample ID: 435311

v (low/med): LOW Date Received: 07/08/95

Solids: 93.4

Concentration Units (ug/L or mg/kg dry weight): MG/KG

CAS No.	Analyte	Concentration	C	Q	M
7440-38-2	Arsenic				NR
7440-39-3	Barium				NR
7440-43-9	Cadmium				NR
7440-47-3	Chromium				NR
7439-92-1	Lead	268		*	P
7439-97-6	Mercury				NR
7782-49-2	Selenium				NR
7440-22-4	Silver				NR

olor Before: Clarity Before: Texture:

olor After: Clarity After: Artifacts:

omments:

A2-1

FORM I - IN ILM03.0

U.S. EPA - CLP

1

INORGANIC ANALYSES DATA SHEET

EPA SAMPLE NO.

A2-2

ab Name: NYTEST_ENV_INC Contract: 9521852

ab Code: NYTEST Case No.: 24353 SAS No.: SDG No.: 24353

at ix (soil/water): SOIL Lab Sample ID: 435312

evel (low/med): LOW Date Received: 07/08/95

Solids: 88.1

Concentration Units (ug/L or mg/kg dry weight): MG/KG

CAS No.	Analyte	Concentration	C	Q	M
7440-38-2	Arsenic				NR
7440-39-3	Barium				NR
7440-43-9	Cadmium				NR
7440-47-3	Chromium				NR
7439-92-1	Lead	371		*	P
7439-97-6	Mercury				NR
7782-49-2	Selenium				NR
7440-22-4	Silver				NR

Color Before: Clarity Before: Texture:

Color After: Clarity After: Artifacts:

Comments:

A2-2

FORM I - IN ILM03.0

U.S. EPA - CLP

1

INORGANIC ANALYSES DATA SHEET

EPA SAMPLE NO.

A2-3

ab Name: NYTEST_ENV_INC Contract: 9521852

ab Code: NYTEST Case No.: 24353 SAS No.: SDG No.: 24353

at ix (soil/water): SOIL Lab Sample ID: 435313

evel (low/med): LOW Date Received: 07/08/95

Solids: 95.4

Concentration Units (ug/L or mg/kg dry weight): MG/KG

CAS No.	Analyte	Concentration	C	Q	M
7440-38-2	Arsenic				NR
7440-39-3	Barium				NR
7440-43-9	Cadmium				NR
7440-47-3	Chromium				NR
7439-92-1	Lead	128		*	P
7439-97-6	Mercury				NR
7782-49-2	Selenium				NR
7440-22-4	Silver				NR

olor Before: Clarity Before: Texture:

olor After: Clarity After: Artifacts:

omments:

A2-3

FORM I - IN ILM03.0

U.S. EPA - CLP

1

INORGANIC ANALYSES DATA SHEET

EPA SAMPLE NO.

A2-4

a Name: NYTEST_ENV_INC Contract: 9521852

ab Code: NYTEST Case No.: 24353 SAS No.: SDG No.: 24353

a rix (soil/water): SOIL Lab Sample ID: 435314

e el (low/med): LOW Date Received: 07/08/95

Solids: 94.6

Concentration Units (ug/L or mg/kg dry weight): MG/KG

CAS No.	Analyte	Concentration	C	Q	M
7440-38-2	Arsenic				NR
7440-39-3	Barium				NR
7440-43-9	Cadmium				NR
7440-47-3	Chromium				NR
7439-92-1	Lead	286		*	P
7439-97-6	Mercury				NR
7782-49-2	Selenium				NR
7440-22-4	Silver				NR

Color Before: Clarity Before: Texture:

Color After: Clarity After: Artifacts:

Comments:

A2-4

FORM I - IN ILM03.0

U.S. EPA - CLP

1
INORGANIC ANALYSES DATA SHEET

EPA SAMPLE NO.

A2-5

a Name: NYTEST_ENV_INC_____ Contract: 9521852___

ab Code: NYTEST Case No.: 24353_ SAS No.: _____ SDG No.: 24353_

a rix (soil/water): SOIL_ Lab Sample ID: 435315

e el (low/med): LOW__ Date Received: 07/08/95

Solids: _91.1

Concentration Units (ug/L or mg/kg dry weight): MG/KG

CAS No.	Analyte	Concentration	C	Q	M
7440-38-2	Arsenic__				NR
7440-39-3	Barium___				NR
7440-43-9	Cadmium__				NR
7440-47-3	Chromium_				NR
7439-92-1	Lead_____	34.1		*	P_
7439-97-6	Mercury__				NR
7782-49-2	Selenium_				NR
7440-22-4	Silver___				NR

olor Before: _____ Clarity Before: _____ Texture: _____

c or After: _____ Clarity After: _____ Artifacts: _____

omments:
A2-5

FORM I - IN ILM03.0

U.S. EPA - CLP

1

INORGANIC ANALYSES DATA SHEET

EPA SAMPLE NO.

A2-6

ab Name: NYTEST_ENV_INC_____ Contract: 9521852___

ab Code: NYTEST Case No.: 24353_ SAS No.: _____ SDG No.: 24353_

atrix (soil/water): SOIL_ Lab Sample ID: 435316

evel (low/med): LOW__ Date Received: 07/08/95

Solids: _92.7

Concentration Units (ug/L or mg/kg dry weight): MG/KG

CAS No.	Analyte	Concentration	C	Q	M
7440-38-2	Arsenic__				NR
7440-39-3	Barium___				NR
7440-43-9	Cadmium__				NR
7440-47-3	Chromium_				NR
7439-92-1	Lead_____	198		*	P_
7439-97-6	Mercury__				NR
7782-49-2	Selenium_				NR
7440-22-4	Silver___				NR

olor Before: _____ Clarity Before: _____ Texture: _____

olor After: _____ Clarity After: _____ Artifacts: _____

omments:

A2-6

FORM I - IN ILM03.0

U.S. EPA - CLP

1

INORGANIC ANALYSES DATA SHEET

EPA SAMPLE NO.

A2-7

b ame: NYTEST_ENV_INC_____ Contract: 9521852___

b Code: NYTEST Case No.: 24353_ SAS No.: _____ SDG No.: 24353_

tr x (soil/water): SOIL_ Lab Sample ID: 435317

ve (low/med): LOW__ Date Received: 07/08/95

Solids: _96.4

Concentration Units (ug/L or mg/kg dry weight): MG/KG

CAS No.	Analyte	Concentration	C	Q	M
7440-38-2	Arsenic__				NR
7440-39-3	Barium___				NR
7440-43-9	Cadmium__				NR
7440-47-3	Chromium_				NR
7439-92-1	Lead_____	118		*	P_
7439-97-6	Mercury__				NR
7782-49-2	Selenium_				NR
7440-22-4	Silver___				NR

lc_ Before: _____ Clarity Before: _____ Texture: _____

lc After: _____ Clarity After: _____ Artifacts: _____

mments:

A2-7

FORM I - IN ILM03.0

U.S. EPA - CLP

1
INORGANIC ANALYSES DATA SHEET

EPA SAMPLE NO.

A2-8

ab Name: NYTEST_ENV_INC Contract: 9521852

ab Code: NYTEST Case No.: 24353 SAS No.: SDG No.: 24353

at ix (soil/water): SOIL Lab Sample ID: 435318

ev l (low/med): LOW Date Received: 07/08/95

Solids: 90.7

Concentration Units (ug/L or mg/kg dry weight): MG/KG

CAS No.	Analyte	Concentration	C	Q	M
7440-38-2	Arsenic				NR
7440-39-3	Barium				NR
7440-43-9	Cadmium				NR
7440-47-3	Chromium				NR
7439-92-1	Lead	40.2		*	P
7439-97-6	Mercury				NR
7782-49-2	Selenium				NR
7440-22-4	Silver				NR

ol r Before: Clarity Before: Texture:

ol r After: Clarity After: Artifacts:

omments:
A2-8

FORM I - IN ILM03.0

U.S. EPA - CLP

1

INORGANIC ANALYSES DATA SHEET

EPA SAMPLE NO.

A2-9

Lab Name: NYTEST_ENV_INC_____ Contract: 9521852___

Lab Code: NYTEST Case No.: 24353_ SAS No.: _____ SDG No.: 24353_

Matrix (soil/water): SOIL_ Lab Sample ID: 435319

Level (low/med): LOW__ Date Received: 07/08/95

% Solids: _94.6

Concentration Units (ug/L or mg/kg dry weight): MG/KG

CAS No.	Analyte	Concentration	C	Q	M
7440-38-2	Arsenic				NR
7440-39-3	Barium				NR
7440-43-9	Cadmium				NR
7440-47-3	Chromium				NR
7439-92-1	Lead	3800		*	P
7439-97-6	Mercury				NR
7782-49-2	Selenium				NR
7440-22-4	Silver				NR

Color Before: _____ Clarity Before: _____ Texture: _____

Color After: _____ Clarity After: _____ Artifacts: _____

Comments:

A2-9

FORM I - IN ILM03.0

U.S. EPA - CLP

1
INORGANIC ANALYSES DATA SHEET

EPA SAMPLE NO.

A2-10

ab Name: NYTEST_ENV_INC_____ Contract: 9521852___

ab Code: NYTEST Case No.: 24353_ SAS No.: _____ SDG No.: 24353_

at ix (soil/water): SOIL_ Lab Sample ID: 435320

e l (low/med): LOW__ Date Received: 07/08/95

olids: _94.4

Concentration Units (ug/L or mg/kg dry weight): MG/KG

CAS No.	Analyte	Concentration	C	Q	M
7440-38-2	Arsenic__				NR
7440-39-3	Barium___				NR
7440-43-9	Cadmium__				NR
7440-47-3	Chromium_				NR
7439-92-1	Lead_____	580		*	P_
7439-97-6	Mercury__				NR
7782-49-2	Selenium_				NR
7440-22-4	Silver___				NR

Color Before: _____ Clarity Before: _____ Texture: _____

Color After: _____ Clarity After: _____ Artifacts: _____

Comments:
A2-10

FORM I - IN ILM03.0

U.S. EPA - CLP

1

INORGANIC ANALYSES DATA SHEET

EPA SAMPLE NO.

A3-1

ab Name: NYTEST_ENV_INC_____ Contract: 9521852___

ab Code: NYTEST Case No.: 24353_ SAS No.: _____ SDG No.: 24353_

at ix (soil/water): SOIL_ Lab Sample ID: 435306

ev l (low/med): LOW__ Date Received: 07/08/95

s lids: _90.6

Concentration Units (ug/L or mg/kg dry weight): MG/KG

CAS No.	Analyte	Concentration	C	Q	M
7440-38-2	Arsenic__				NR
7440-39-3	Barium___				NR
7440-43-9	Cadmium__				NR
7440-47-3	Chromium_				NR
7439-92-1	Lead_____	256		*	P_
7439-97-6	Mercury__				NR
7782-49-2	Selenium_				NR
7440-22-4	Silver___				NR

olor Before: _____ Clarity Before: _____ Texture: _____

olor After: _____ Clarity After: _____ Artifacts: _____

omments:
A3-1

FORM I - IN ILM03.0

U.S. EPA - CLP

1
INORGANIC ANALYSES DATA SHEET

EPA SAMPLE NO.

A3-2

a Name: NYTEST_ENV_INC_____ Contract: 9521852___

a Code: NYTEST Case No.: 24353_ SAS No.: _____ SDG No.: 24353_

a rix (soil/water): SOIL_ Lab Sample ID: 435307

e el (low/med): LOW__ Date Received: 07/08/95

Solids: _94.9

Concentration Units (ug/L or mg/kg dry weight): MG/KG

CAS No.	Analyte	Concentration	C	Q	M
7440-38-2	Arsenic				NR
7440-39-3	Barium				NR
7440-43-9	Cadmium				NR
7440-47-3	Chromium				NR
7439-92-1	Lead	328		*	P
7439-97-6	Mercury				NR
7782-49-2	Selenium				NR
7440-22-4	Silver				NR

Color Before: _____ Clarity Before: _____ Texture: _____

Color After: _____ Clarity After: _____ Artifacts: _____

Comments:
A3-2

FORM I - IN ILM03.0

U.S. EPA - CLP

1

INORGANIC ANALYSES DATA SHEET

EPA SAMPLE NO.

A3-3

Lab Name: NYTEST_ENV_INC_____ Contract: 9521852___

Lab Code: NYTEST Case No.: 24353_ SAS No.: _____ SDG No.: 24353_

Matrix (soil/water): SOIL_ Lab Sample ID: 435308

Level (low/med): LOW__ Date Received: 07/08/95

% Solids: _93.6

Concentration Units (ug/L or mg/kg dry weight): MG/KG

CAS No.	Analyte	Concentration	C	Q	M
7440-38-2	Arsenic__				NR
7440-39-3	Barium___				NR
7440-43-9	Cadmium__				NR
7440-47-3	Chromium_				NR
7439-92-1	Lead_____	205		*	P_
7439-97-6	Mercury__				NR
7782-49-2	Selenium_				NR
7440-22-4	Silver___				NR

Color Before: _____ Clarity Before: _____ Texture: _____

Color After: _____ Clarity After: _____ Artifacts: _____

Comments:

A3-3

FORM I - IN ILM03.0

U.S. EPA - CLP

1
INORGANIC ANALYSES DATA SHEET

EPA SAMPLE NO.

A3-4

ab Name: NYTEST_ENV_INC_____ Contract: 9521852___

ab Code: NYTEST Case No.: 24353_ SAS No.: _____ SDG No.: 24353_

at ix (soil/water): SOIL_ Lab Sample ID: 435309

ev l (low/med): LOW__ Date Received: 07/08/95

Solids: _88.8

Concentration Units (ug/L or mg/kg dry weight): MG/KG

CAS No.	Analyte	Concentration	C	Q	M
7440-38-2	Arsenic__				NR
7440-39-3	Barium___				NR
7440-43-9	Cadmium__				NR
7440-47-3	Chromium_				NR
7439-92-1	Lead_____	225		*	P_
7439-97-6	Mercury__				NR
7782-49-2	Selenium_				NR
7440-22-4	Silver___				NR

ol r Before: _____ Clarity Before: _____ Texture: _____

ol r After: _____ Clarity After: _____ Artifacts: _____

omments:
A3-4

FORM I - IN ILM03.0

U.S. EPA - CLP

1
INORGANIC ANALYSES DATA SHEET

EPA SAMPLE NO.

A3-5

Name: NYTEST_ENV_INC Contract: 9521852

Lab Code: NYTEST Case No.: 24353 SAS No.: SDG No.: 24353

Matrix (soil/water): SOIL Lab Sample ID: 435310

Level (low/med): LOW Date Received: 07/08/95

% Solids: 92.0

Concentration Units (ug/L or mg/kg dry weight): MG/KG

CAS No.	Analyte	Concentration	C	Q	M
7440-38-2	Arsenic				NR
7440-39-3	Barium				NR
7440-43-9	Cadmium				NR
7440-47-3	Chromium				NR
7439-92-1	Lead	173		*	P
7439-97-6	Mercury				NR
7782-49-2	Selenium				NR
7440-22-4	Silver				NR

Color Before: Clarity Before: Texture:

Color After: Clarity After: Artifacts:

Comments:
A3-5

FORM I - IN ILM03.0

U.S. EPA - CLP

1

INORGANIC ANALYSES DATA SHEET

EPA SAMPLE NO.

A3-6

Lab Name: NYTEST_ENV_INC_____ Contract: 9521852___

Lab Code: NYTEST Case No.: 24353_ SAS No.: _____ SDG No.: 24353_

Matrix (soil/water): SOIL_ Lab Sample ID: 435301

Level (low/med): LOW__ Date Received: 07/08/95

% Solids: _90.9

Concentration Units (ug/L or mg/kg dry weight): MG/KG

CAS No.	Analyte	Concentration	C	Q	M
7440-38-2	Arsenic__				NR
7440-39-3	Barium___				NR
7440-43-9	Cadmium__				NR
7440-47-3	Chromium_				NR
7439-92-1	Lead_____	86.3		*	P_
7439-97-6	Mercury__				NR
7782-49-2	Selenium_				NR
7440-22-4	Silver___				NR

Color Before: _____ Clarity Before: _____ Texture: _____

Color After: _____ Clarity After: _____ Artifacts: _____

Comments:
A3-6

FORM I - IN ILM03.0

U.S. EPA - CLP

1
INORGANIC ANALYSES DATA SHEET

EPA SAMPLE NO.

A1-1

Lab Name: NYTEST_ENV_INC_____ Contract: 9521852_

Lab Code: NYTEST Case No.: 24353_ SAS No.: _____ SDG No.: 24353_

Matrix (soil/water): WATER Lab Sample ID: T435302

Level (low/med): LOW__ Date Received: 07/08/95

% Solids: __0.0

Concentration Units (ug/L or mg/kg dry weight): MG/L_

CAS No.	Analyte	Concentration	C	Q	M
7440-38-2	Arsenic__	0.056	U		P_
7440-39-3	Barium___	0.96			P
7440-43-9	Cadmium__	0.013			P_
7440-47-3	Chromium_	0.018			P_
7439-92-1	Lead____	0.46			P_
7439-97-6	Mercury__	0.00020	U		CV
7782-49-2	Selenium_	0.087	U		P_
7440-22-4	Silver___	0.0068	U		P_

Color Before: _____ Clarity Before: _____ Texture: _____

Color After: _____ Clarity After: Artifacts: _____

Comments:
A1-1_____TCLP_____

FORM I - IN TTM03.0

U.S. EPA - CLP

1
INORGANIC ANALYSES DATA SHEET

EPA SAMPLE NO.

A1-2

Lab Name: NYTEST_ENV_INC_____ Contract: 9521852___

Lab Code: NYTEST Case No.: 24353_ SAS No.: _____ SDG No.: 24353_

Matrix (soil/water): WATER Lab Sample ID: T435303

Level (low/med): LOW_ Date Received: 07/08/95

% Solids: __0.0

Concentration Units (ug/L or mg/kg dry weight): MG/L_

CAS No.	Analyte	Concentration	C	Q	M
7440-38-2	Arsenic	0.056	U		P
7440-39-3	Barium	0.99			P
7440-43-9	Cadmium	0.0094			P
7440-47-3	Chromium	0.019			P
7439-92-1	Lead	0.34			P
7439-97-6	Mercury	0.00020	U		CV
7782-49-2	Selenium	0.087	U		P
7440-22-4	Silver	0.0068	U		P

Color Before: _____ Clarity Before: _____ Texture: _____

Color After: _____ Clarity After: _____ Artifacts: _____

Comments:
A1-2_____TCLP_____

FORM I - IN ILM03.0

U.S. EPA - CLP

1

INORGANIC ANALYSES DATA SHEET

EPA SAMPLE NO.

A1 3

Lab Name: NYTEST_ENV_INC Contract: 9521852

Lab Code: NYTEST Case No.: 24353 SAS No.: SDG No.: 24353

Matrix (soil/water): WATER Lab Sample ID: T435304

Level (low/med): LOW Date Received: 07/08/95

% Solids: 0.0

Concentration Units (ug/L or mg/kg dry weight): MG/L

CAS No.	Analyte	Concentration	C	Q	M
7440-38-2	Arsenic	0.056	U		P
7440-39-3	Barium	1.5			P
7440-43-9	Cadmium	0.032			P
7440-47-3	Chromium	0.010			P
7439-92-1	Lead	1.5			P
7439-97-6	Mercury	0.00020	U		CV
7782-49-2	Selenium	0.087	U		P
7440-22-4	Silver	0.0068	U		P

Color Before: Clarity Before: Texture:

Color After: Clarity After: Artifacts:

Comments:

A1-3 TCLP

FORM I IN ILM03.0

U.S. EPA - CLP

1

INORGANIC ANALYSES DATA SHEET

EPA SAMPLE NO.

A1-4

Lab Name: NYTEST_ENV_INC Contract: 9521852

Lab Code: NYTEST Case No.: 24353 SAS No.: SDG No.: 24353

Matrix (soil/water): WATER Lab Sample ID: T435305

Level (low/med): LOW Date Received: 07/08/95

% Solids: 0.0

Concentration Units (ug/L or mg/kg dry weight): MG/L

CAS No.	Analyte	Concentration	C	Q	M
7440-38-2	Arsenic	0.056	U		P
7440-39-3	Barium	0.94			P
7440-43-9	Cadmium	0.010			P
7440-47-3	Chromium	0.0087	B		P
7439-92-1	Lead	0.98			P
7439-97-6	Mercury	0.00020	U		CV
7782-49-2	Selenium	0.087	U		P
7440-22-4	Silver	0.0068	U		P

Color Before: Clarity Before: Texture:

Color After: Clarity After: Artifacts:

Comments:

A1-4 TCLP

FORM I - IN ILM03.0

U.S. EPA - CLP

1

INORGANIC ANALYSES DATA SHEET

EPA SAMPLE NO.

A2-1

Lab Name: NYTEST_ENV_INC Contract: 9521852

Lab Code: NYTEST Case No.: 24353 SAS No.: SDG No.: 24353

Matrix (soil/water): WATER Lab Sample ID: T435311

Level (low/med): LOW Date Received: 07/08/95

% Solids: 0.0

Concentration Units (ug/L or mg/kg dry weight): MG/L

CAS No.	Analyte	Concentration	C	Q	M
7440-38-2	Arsenic	0.056	U		P
7440-39-3	Barium	0.75			P
7440-43-9	Cadmium	0.0079			P
7440-47-3	Chromium	0.0081	U		P
7439-92-1	Lead	0.46			P
7439-97-6	Mercury	0.00020	U		CV
7782-49-2	Selenium	0.087	U		P
7440-22-4	Silver	0.0068	U		P

Color Before: Clarity Before: Texture:

Color After: Clarity After: Artifacts:

Comments:
A2-1 TCLP

FORM I - IN ILM03.0

U.S. EPA - CLP

1
INORGANIC ANALYSES DATA SHEET

EPA SAMPLE NO.

A2-2

Lab Name: NYTEST_ENV_INC Contract: 9521852

Lab Code: NYTEST Case No.: 24353 SAS No.: SDG No.: 24353

Matrix (soil/water): WATER Lab Sample ID: T435312

Level (low/med): LOW Date Received: 07/08/95

% Solids: 0.0

Concentration Units (ug/L or mg/kg dry weight): MG/L

CAS No.	Analyte	Concentration	C	Q	M
7440-38-2	Arsenic	0.091			P
7440-39-3	Barium	0.91			P
7440-43-9	Cadmium	0.0095			P
7440-47-3	Chromium	0.0081	U		P
7439-92-1	Lead	0.079			P
7439-97-6	Mercury	0.0059			CV
7782-49-2	Selenium	0.087	U		P
7440-22-4	Silver	0.0068	U		P

Color Before: Clarity Before: Texture:

Color After: Clarity After: Artifacts:

Comments:
A2-2 TCLP

FORM I - IN ILM03.0

U.S. EPA - CLP

1

INORGANIC ANALYSES DATA SHEET

EPA SAMPLE NO.

A2-3

Lab Name: NYTEST_ENV_INC Contract: 9521852

Lab Code: NYTEST Case No.: 24353 SAS No.: SDG No.: 24353

Matrix (soil/water): WATER Lab Sample ID: T435313

Level (low/med): LOW Date Received: 07/08/95

% Solids: 0.0

Concentration Units (ug/L or mg/kg dry weight): MG/L

CAS No.	Analyte	Concentration	C	Q	M
7440-38-2	Arsenic	0.056	U		P
7440-39-3	Barium	0.54			P
7440-43-9	Cadmium	0.034			P
7440-47-3	Chromium	0.015			P
7439-92-1	Lead	0.13			P
7439-97-6	Mercury	0.00020	U		CV
7782-49-2	Selenium	0.087	U		P
7440-22-4	Silver	0.0068	U		P

Color Before: Clarity Before: Texture:

Color After: Clarity After: Artifacts:

Comments:

A2-3 TCLP

FORM I - IN TTM03.0

U.S. EPA - CLP

1
INORGANIC ANALYSES DATA SHEET

EPA SAMPLE NO.

A2-4

Lab Name: NYTEST_ENV_INC_____ Contract: 9521852___

Lab Code: NYTEST Case No.: 24353_ SAS No.: _____ SDG No.: 24353_

Matrix (soil/water): WATER Lab Sample ID: T435314

Level (low/med): LOW__ Date Received: 07/08/95

% Solids: __0.0

Concentration Units (ug/L or mg/kg dry weight): MG/L_

CAS No.	Analyte	Concentration	C	Q	M
7440-38-2	Arsenic__	0.056	U		P_
7440-39-3	Barium___	0.96			P_
7440-43-9	Cadmium__	0.0050	U		P_
7440-47-3	Chromium_	0.052			P_
7439-92-1	Lead_____	0.62			P_
7439-97-6	Mercury__	0.00020	U		CV
7782-49-2	Selenium_	0.087	U		P_
7440-22-4	Silver___	0.0068	U		P_

Color Before: Clarity Before: _____ Texture: _____

Color After: _____ Clarity After: _____ Artifacts: _____

Comments:
A2-4_____TCLP_____

FORM I - IN ILM03.0

U.S. EPA - CLP

1
INORGANIC ANALYSES DATA SHEET

EPA SAMPLE NO.

A2-5

Lab Name: NYTEST_ENV_INC_____ Contract: 9521852___

Lab Code: NYTEST Case No.: 24353_ SAS No.: _____ SDG No.: 24353_

Matrix (soil/water): WATER Lab Sample ID: T435315

Level (low/med): LOW__ Date Received: 07/08/95

% Solids: __0.0

Concentration Units (ug/L or mg/kg dry weight): MG/L_

CAS No.	Analyte	Concentration	C	Q	M
7440-38-2	Arsenic	0.056	U		P
7440-39-3	Barium	0.39			P
7440-43-9	Cadmium	0.0050	U		P
7440-47-3	Chromium	0.0081	U		P
7439-92-1	Lead	0.051			P
7439-97-6	Mercury	0.00020	U		CV
7782-49-2	Selenium	0.087	U		P
7440-22-4	Silver	0.0068	U		P

Color Before: _____ Clarity Before: _____ Texture: _____

Color After: _____ Clarity After: _____ Artifacts: _____

Comments:
A2-5_____TCLP_____

FORM I - IN ILM03.0

U.S. EPA - CLP

1
INORGANIC ANALYSES DATA SHEET

EPA SAMPLE NO.

A2-6

Lab Name: NYTEST_ENV_INC_____ Contract: 9521852___

Lab Code: NYTEST Case No.: 24353_ SAS No.: _____ SDG No.: 24353_

Matrix (soil/water): WATER Lab Sample ID: T435316

Level (low/med): LOW__ Date Received: 07/08/95

% Solids: __0.0

Concentration Units (ug/L or mg/kg dry weight): MG/L_

CAS No.	Analyte	Concentration	C	Q	M
7440-38-2	Arsenic__	0.056	U		P_
7440-39-3	Barium___	0.49			P_
7440-43-9	Cadmium__	0.0050	U		P_
7440-47-3	Chromium_	0.0081	U		P_
7439-92-1	Lead_____	0.11			P_
7439-97-6	Mercury	0.00020	U		CV
7782-49-2	Selenium_	0.087	U		P_
7440-22-4	Silver___	0.0068	U		P_

Color Before: ____ Clarity Before: _____ Texture: _____

Color After: _____ Clarity After: _____ Artifacts: _____

Comments:
A2-6_____TCLP_____

U.S. EPA - CLP

1
INORGANIC ANALYSES DATA SHEET

EPA SAMPLE NO.

A2-7

Lab Name: NYTEST_ENV_INC Contract: 9521853___

Lab Code: NYTEST Case No.: 24353_ SAS No.: _____ SDG No.: 24353_

Matrix (soil/water): WATER Lab Sample ID: T435317

Level (low/med): LOW__ Date Received: 07/08/95

% Solids: __0.0

Concentration Units (ug/L or mg/kg dry weight): MG/L_

CAS No.	Analyte	Concentration	C	Q	M
7440-38-2	Arsenic	0.056	U		P
7440-39-3	Barium	1.1			P
7440-43-9	Cadmium	0.0050	U		P
7440-47-3	Chromium	0.027			P
7439-92-1	Lead	0.16			P
7439-97-6	Mercury	0.00020			CV
7782-49-2	Selenium	0.087	U		P
7440-22-4	Silver	0.0068	U		P

Color Before: _____ Clarity Before: _____ Texture: _____

Color After: _____ Clarity After: _____ Artifacts: ___

Comments:
A2-7_____TCLP_____

FORM I - IN ILM03.0

U.S. EPA - CLP

1
INORGANIC ANALYSES DATA SHEET

EPA SAMPLE NO.

A2-8

Lab Name: NYTEST_ENV_INC Contract: 9521852

Lab Code: NYTEST Case No.: 24353 SAS No.: SDG No.: 24353

Matrix (soil/water): WATER Lab Sample ID: T435318

Level (low/med): LOW Date Received: 07/08/95

% Solids: 0.0

Concentration Units (ug/L or mg/kg dry weight): MG/L

CAS No.	Analyte	Concentration	C	Q	M
7440-38-2	Arsenic	0.056	U		P
7440-39-3	Barium	0.44			P
7440-43-9	Cadmium	0.0050	U		P
7440-47-3	Chromium	0.0081	U		P
7439-92-1	Lead	0.046	U		P
7439-97-6	Mercury	0.00020	U		CV
7782-49-2	Selenium	0.087	U		P
7440-22-4	Silver	0.0068	U		P

Color Before: Clarity Before: Texture:

Color After: Clarity After: Artifacts:

Comments:
A2-8 TCLP

FORM I - IN ILM03.0

U.S. EPA - CLP

1

INORGANIC ANALYSES DATA SHEET

EPA SAMPLE NO.

A2-9

Lab Name: NYTEST_ENV_INC Contract: 9521852

Lab Code: NYTEST Case No.: 24353_ SAS No.: _____ SDG No.: 24353_

Matrix (soil/water): WATER Lab Sample ID: T435319

Level (low/med): LOW Date Received: 07/08/95

% Solids: 0.0

Concentration Units (ug/L or mg/kg dry weight): MG/L_

CAS No.	Analyte	Concentration	C	Q	M
7440-38-2	Arsenic	0.056	U		P
7440-39-3	Barium	0.60			P
7440-43-9	Cadmium	0.0050	U		P
7440-47-3	Chromium	0.0081	U		P
7439-92-1	Lead	0.13			P
7439-97-6	Mercury	0.00020	U		CV
7782-49-2	Selenium	0.087	U		P
7440-22-4	Silver	0.0068	U		P

Color Before: _____ Clarity Before: _____ Texture: _____

Color After: _____ Clarity After: _____ Artifacts: _____

Comments:

A2-9 TCLP

FORM I - IN ILM03.0

U.S. EPA - CLP

1
INORGANIC ANALYSES DATA SHEET

EPA SAMPLE NO.

A2-10

Lab Name: NYTEST_ENV_INC Contract: 9521852

Lab Code: NYTEST Case No.: 24353 SAS No.: SDG No.: 24353

Matrix (soil/water): WATER Lab Sample ID: T435320

Level (low/med): LOW Date Received: 07/08/95

% Solids: 0.0

Concentration Units (ug/L or mg/kg dry weight): MG/L

CAS No.	Analyte	Concentration	C	Q	M
7440-38-2	Arsenic	0.056	U		P
7440-39-3	Barium	0.42			P
7440-43-9	Cadmium	0.0050	U		P
7440-47-3	Chromium	0.0081	U		P
7439-92-1	Lead	0.38			P
7439-97-6	Mercury	0.00020	U		CV
7782-49-2	Selenium	0.087	U		P
7440-22-4	Silver	0.0068	U		P

Color Before: Clarity Before: Texture:

Color After: Clarity After: Artifacts:

Comments:
A2-10 TCLP

FORM I - IN IIM03.0

U.S. EPA - CLP

1

INORGANIC ANALYSES DATA SHEET

EPA SAMPLE NO.

A3-1

Lab Name: NYTEST_ENV_INC Contract: 9521852

Lab Code: NYTEST Case No.: 24353 SAS No.: SDG No.: 24353

Matrix (soil/water): WATER Lab Sample ID: T435306

Level (low/med): LOW Date Received: 07/08/95

% Solids: 0.0

Concentration Units (ug/L or mg/kg dry weight): MG/L

CAS No.	Analyte	Concentration	C	Q	M
7440-38-2	Arsenic	0.056	U		P
7440-39-3	Barium	0.86			P
7440-43-9	Cadmium	0.0089			P
7440-47-3	Chromium	0.022			P
7439-92-1	Lead	0.92			P
7439-97-6	Mercury	0.00020	U		CV
7782-49-2	Selenium	0.087	U		P
7440-22-4	Silver	0.0068	U		P

Color Before: Clarity Before: Texture:

Color After: Clarity After: Artifacts:

Comments:
A3-1 TCLP

FORM I - IN ILM03.0

U.S. EPA - CLP

1

INORGANIC ANALYSES DATA SHEET

EPA SAMPLE NO.

A3-2

Lab Name: NYTEST_ENV_INC Contract: 9521852

Lab Code: NYTEST Case No.: 24353 SAS No.: SDG No.: 24353

Matrix (soil/water): WATER Lab Sample ID: T435307

Level (low/med): LOW Date Received: 07/08/95

% Solids: 0.0

Concentration Units (ug/L or mg/kg dry weight): MG/L

CAS No.	Analyte	Concentration	C	Q	M
7440-38-2	Arsenic	0.056	U		P
7440-39-3	Barium	0.94			P
7440-43-9	Cadmium	0.0083			P
7440-47-3	Chromium	0.012			P
7439-92-1	Lead	0.43			P
7439-97-6	Mercury	0.00020	U		CV
7782-49-2	Selenium	0.087	U		P
7440-22-4	Silver	0.0068	U		P

Color Before: Clarity Before: Texture:

Color After: Clarity After: Artifacts:

Comments:

A3-2 TCLP

FORM I - IN IIM03.0

U.S. EPA - CLP

1

INORGANIC ANALYSES DATA SHEET

EPA SAMPLE NO.

A3-3

Lab Name: NYTEST_ENV_INC Contract: 9521852

Lab Code: NYTEST Case No.: 24353 SAS No.: SDG No.: 24353

Matrix (soil/water): WATER Lab Sample ID: T435308

Level (low/med): LOW Date Received: 07/08/95

% Solids: 0.0

Concentration Units (ug/L or mg/kg dry weight): MG/L

CAS No.	Analyte	Concentration	C	Q	M
7440-38-2	Arsenic	0.056	U		P
7440-39-3	Barium	1.3			P
7440-43-9	Cadmium	0.0094			P
7440-47-3	Chromium	0.022			P
7439-92-1	Lead	0.91			P
7439-97-6	Mercury	0.00020	U		CV
7782-49-2	Selenium	0.087	U		P
7440-22-4	Silver	0.0068	U		P

Color Before: Clarity Before: Texture:

Color After: Clarity After: Artifacts:

Comments:

A3-3 TCLP

FORM I - IN ILM03.0

U.S. EPA - CLP

1

INORGANIC ANALYSES DATA SHEET

EPA SAMPLE NO.

A3 4

Lab Name: NYTEST_ENV_INC Contract: 9521852

Lab Code: NYTEST Case No.: 24353 SAS No.: SDG No.: 24353

Matrix (soil/water): WATER Lab Sample ID: T435309

Level (low/med): LOW Date Received: 07/08/95

% Solids: 0.0

Concentration Units (ug/L or mg/kg dry weight): MG/L

CAS No.	Analyte	Concentration	C	Q	M
7440-38-2	Arsenic	0.056	U		P
7440-39-3	Barium	1.3			P
7440-43-9	Cadmium	0.013			P
7440-47-3	Chromium	0.051			P
7439-92-1	Lead	1.2			P
7439-97-6	Mercury	0.00020	U		CV
7782-49-2	Selenium	0.087	U		P
7440-22-4	Silver	0.0068	U		P

Color Before: Clarity Before: Texture:

Color After: Clarity After: Artifacts:

Comments:
A3-4 TCLP

FORM I - IN ILM03.0

U.S. EPA - CLP

1

INORGANIC ANALYSES DATA SHEET

EPA SAMPLE NO.

A3-5

Lab Name: NYTEST_ENV INC_____ Contract: 9521852___

Lab Code: NYTEST Case No.: 24353_ SAS No.: _____ SDG No.: 24353_

Matrix (soil/water): WATER Lab Sample ID: T435310

Level (low/med): LOW__ Date Received: 07/08/95

% Solids: __0.0

Concentration Units (ug/L or mg/kg dry weight): MG/L_

CAS No.	Analyte	Concentration	C	Q	M
7440-38-2	Arsenic	0.056	U		P
7440-39-3	Barium	1.4			P
7440-43-9	Cadmium	0.013			P
7440-47-3	Chromium	0.083			P
7439-92-1	Lead	0.60			P
7439-97-6	Mercury	0.00020	U		CV
7782-49-2	Selenium	0.087	U		P
7440-22-4	Silver	0.0068	U		P

Color Before: _____ Clarity Before: _____ Texture: _____

Color After: _____ Clarity After: ___ Artifacts: _____

Comments:

A3-5_____TCLP_____

FORM I - IN ILM03.0

U.S. EPA - CLP

1

INORGANIC ANALYSES DATA SHEET

EPA SAMPLE NO.

A3-6

Lab Name: NYTEST_ENV_INC Contract: 9521852

Lab Code: NYTEST Case No.: 24353 SAS No.: SDG No.: 24353

Matrix (soil/water): WATER Lab Sample ID: T435301

Level (low/med): LOW Date Received: 07/08/95

% Solids: 0.0

Concentration Units (ug/L or mg/kg dry weight): MG/L

CAS No.	Analyte	Concentration	C	Q	M
7440-38-2	Arsenic	0.056	U		P
7440-39-3	Barium	0.45			P
7440-43-9	Cadmium	0.0050	U		P
7440-47-3	Chromium	0.0081	U		P
7439-92-1	Lead	0.048			P
7439-97-6	Mercury	0.00020	U		CV
7782-49-2	Selenium	0.10			P
7440-22-4	Silver	0.0068	U		P

Color Before: Clarity Before: Texture:

Color After: Clarity After: Artifacts:

Comments:
A3-6 TCLP

FORM I - IN

IIM03.0

U.S. EPA - CLP

1
INORGANIC ANALYSES DATA SHEET

EPA SAMPLE NO.

A1-1

Lab Name: NYTEST_ENV_INC Contract: 9521852

Lab Code: NYTEST Case No.: 24353 SAS No.: SDG No.: 24353

Matrix (soil/water): WATER Lab Sample ID: T435302

Level (low/med): LOW Date Received: 07/08/95

% Solids: 0.0

Concentration Units (ug/L or mg/kg dry weight): MG/L

CAS No.	Analyte	Concentration	C	Q	M
7440-38-2	Arsenic	0.056	U		P
7440-39-3	Barium	0.96			P
7440-43-9	Cadmium	0.013			P
7440-47-3	Chromium	0.018			P
7439-92-1	Lead	0.46			P
7439-97-6	Mercury	0.00020	U		CV
7782-49-2	Selenium	0.087	U		P
7440-22-4	Silver	0.0068	U		P

Color Before: Clarity Before: Texture:

Color After: Clarity After: Artifacts:

Comments:
A1-1 TCLP

FORM I - IN TIM03.0

U.S. EPA - CLP

1
INORGANIC ANALYSES DATA SHEET

EPA SAMPLE NO.

A1-2

Lab Name: NYTEST_ENV_INC Contract: 9521852

Lab Code: NYTEST Case No.: 24353 SAS No.: SDG No.: 24353

Matrix (soil/water): WATER Lab Sample ID: T435303

Level (low/med): LOW Date Received: 07/08/95

% Solids: 0.0

Concentration Units (ug/L or mg/kg dry weight): MG/L

CAS No.	Analyte	Concentration	C	Q	M
7440-38-2	Arsenic	0.056	U		P
7440-39-3	Barium	0.99			P
7440-43-9	Cadmium	0.0094			P
7440-47-3	Chromium	0.019			P
7439-92-1	Lead	0.34			P
7439-97-6	Mercury	0.00020	U		CV
7782-49-2	Selenium	0.087	U		P
7440-22-4	Silver	0.0068	U		P

Color Before: Clarity Before: Texture:

Color After: Clarity After: Artifacts:

Comments:
A1-2 TCLP

FORM I - IN ILM03.0

U.S. EPA - CLP

1

INORGANIC ANALYSES DATA SHEET

EPA SAMPLE NO.

A1 3

Lab Name: NYTEST_ENV_INC_____ Contract: 9521852___

Lab Code: NYTEST Case No.: 24353_ SAS No.: ___ SDG No.: 24353_

Matrix (soil/water): WATER Lab Sample ID: T435304

Level (low/med): LOW__ Date Received: 07/08/95

% Solids: __0.0

Concentration Units (ug/L or mg/kg dry weight): MG/L_

CAS No.	Analyte	Concentration	C	Q	M
7440-38-2	Arsenic	0.056	U		P
7440-39-3	Barium	1.5			P
7440-43-9	Cadmium	0.032			P
7440-47-3	Chromium	0.010			P
7439-92-1	Lead	1.5			P
7439-97-6	Mercury	0.00020	U		CV
7782-49-2	Selenium	0.087	U		P
7440-22-4	Silver	0.0068	U		P

Color Before: _____ Clarity Before: _____ Texture: _____

Color After: _____ Clarity After: _____ Artifacts: _____

Comments:

A1-3 ____TCLP_____

FORM I IN ILM03.0

U.S. EPA - CLP

1

INORGANIC ANALYSES DATA SHEET

EPA SAMPLE NO.

A1-4

Lab Name: NYTEST_ENV_INC_____ Contract: 9521852___

Lab Code: NYTEST Case No.: 24353_ SAS No.: _____ SDG No.: 24353_

Matrix (soil/water): WATER Lab Sample ID: T435305

Level (low/med): LOW__ Date Received: 07/08/95

% Solids: __0.0

Concentration Units (ug/L or mg/kg dry weight): MG/L_

CAS No.	Analyte	Concentration	C	Q	M
7440-38-2	Arsenic__	0.056	U		P_
7440-39-3	Barium__	0.94			P_
7440-43-9	Cadmium	0.010			P_
7440-47-3	Chromium_	0.0087	B		P_
7439-92-1	Lead__	0.98			P_
7439-97-6	Mercury__	0.00020	U		CV
7782-49-2	Selenium_	0.087	U		P_
7440-22-4	Silver___	0.0068	U		P_

Color Before: _____ Clarity Before: _____ Texture: _____

Color After: _____ Clarity After: _____ Artifacts: _____

Comments:

A1-4___ TCLP_____

FORM I - IN ILM03.0

U.S. EPA - CLP

1
INORGANIC ANALYSES DATA SHEET

EPA SAMPLE NO.

A2-1

Lab Name: NYTEST_ENV_INC Contract: 9521852

Lab Code: NYTEST Case No.: 24353 SAS No.: SDG No.: 24353

Matrix (soil/water): WATER Lab Sample ID: T435311

Level (low/med): LOW Date Received: 07/08/95

% Solids: 0.0

Concentration Units (ug/L or mg/kg dry weight): MG/L

CAS No.	Analyte	Concentration	C	Q	M
7440-38-2	Arsenic	0.056	U		P
7440-39-3	Barium	0.75			P
7440-43-9	Cadmium	0.0079			P
7440-47-3	Chromium	0.0081	U		P
7439-92-1	Lead	0.46			P
7439-97-6	Mercury	0.00020	U		CV
7782-49-2	Selenium	0.087	U		P
7440-22-4	Silver	0.0068	U		P

Color Before: Clarity Before: Texture:

Color After: Clarity After: Artifacts:

Comments:
A2-1 TCLP

FORM I - IN ILM03.0

U.S. EPA - CLP

1
INORGANIC ANALYSES DATA SHEET

EPA SAMPLE NO.

A2-2

Lab Name: NYTEST_ENV_INC Contract: 9521852

Lab Code: NYTEST Case No.: 24353 SAS No.: SDG No.: 24353

Matrix (soil/water): WATER Lab Sample ID: T435312

Level (low/med): LOW Date Received: 07/08/95

% Solids: 0.0

Concentration Units (ug/L or mg/kg dry weight): MG/L

CAS No.	Analyte	Concentration	C	Q	M
7440-38-2	Arsenic	0.091			P
7440-39-3	Barium	0.91			P
7440-43-9	Cadmium	0.0095			P
7440-47-3	Chromium	0.0081	U		P
7439-92-1	Lead	0.079			P
7439-97-6	Mercury	0.0059			CV
7782-49-2	Selenium	0.087	U		P
7440-22-4	Silver	0.0068	U		P

Color Before: Clarity Before: Texture:

Color After: Clarity After: Artifacts:

Comments:
A2-2 TCLP

FORM I - IN ILM03.0

U.S. EPA - CLP

1
INORGANIC ANALYSES DATA SHEET

EPA SAMPLE NO.

A2-3

Lab Name: NYTEST_ENV_INC Contract: 9521852

Lab Code: NYTEST Case No.: 24353 SAS No.: SDG No.: 24353

Matrix (soil/water): WATER Lab Sample ID: T435313

Level (low/med): LOW Date Received: 07/08/95

% Solids: 0.0

Concentration Units (ug/L or mg/kg dry weight): MG/L

CAS No.	Analyte	Concentration	C	Q	M
7440-38-2	Arsenic	0.056	U		P
7440-39-3	Barium	0.54			P
7440-43-9	Cadmium	0.034			P
7440-47-3	Chromium	0.015			P
7439-92-1	Lead	0.13			P
7439-97-6	Mercury	0.00020	U		CV
7782-49-2	Selenium	0.087	U		P
7440-22-4	Silver	0.0068	U		P

Color Before: Clarity Before: Texture:

Color After: Clarity After: Artifacts:

Comments:
A2-3 TCLP

FORM I - IN TTM03.0

U.S. EPA - CLP

1

INORGANIC ANALYSES DATA SHEET

EPA SAMPLE NO.

A2-4

Lab Name: NYTEST_ENV_INC Contract: 9521852

Lab Code: NYTEST Case No.: 24353 SAS No.: SDG No.: 24353

Matrix (soil/water): WATER Lab Sample ID: T435314

Level (low/med): LOW Date Received: 07/08/95

% Solids: 0.0

Concentration Units (ug/L or mg/kg dry weight): MG/L

CAS No.	Analyte	Concentration	C	Q	M
7440-38-2	Arsenic	0.056	U		P
7440-39-3	Barium	0.96			P
7440-43-9	Cadmium	0.0050	U		P
7440-47-3	Chromium	0.052			P
7439-92-1	Lead	0.62			P
7439-97-6	Mercury	0.00020	U		CV
7782-49-2	Selenium	0.087	U		P
7440-22-4	Silver	0.0068	U		P

Color Before: Clarity Before: Texture:

Color After: Clarity After: Artifacts:

Comments:

A2-4 TCLP

FORM I - IN ILM03.0

U.S. EPA - CLP

1

INORGANIC ANALYSES DATA SHEET

EPA SAMPLE NO.

A2-5

Lab Name: NYTEST_ENV_INC_____ Contract: 9521852___

Lab Code: NYTEST Case No.: 24353_ SAS No.: _____ SDG No.: 24353_

Matrix (soil/water): WATER Lab Sample ID: T435315

Level (low/med): LOW__ Date Received: 07/08/95

% Solids: __0.0

Concentration Units (ug/L or mg/kg dry weight): MG/L_

CAS No.	Analyte	Concentration	C	Q	M
7440-38-2	Arsenic__	0.056	U		P_
7440-39-3	Barium___	0.39			P_
7440-43-9	Cadmium__	0.0050	U		P_
7440-47-3	Chromium_	0.0081	U		P_
7439-92-1	Lead____	0.051			P_
7439-97-6	Mercury__	0.00020	U		CV
7782-49-2	Selenium_	0.087	U		P_
7440-22-4	Silver___	0.0068	U		P_

Color Before: _____ Clarity Before: _____ Texture: _____

Color After: _____ Clarity After: _____ Artifacts: _____

Comments:

A2-5_____TCLP_____

FORM I - IN ILM03.0

U.S. EPA - CLP

1
INORGANIC ANALYSES DATA SHEET

EPA SAMPLE NO.

A2-6

Lab Name: NYTEST_ENV_INC Contract: 0521852

Lab Code: NYTEST Case No.: 24353 SAS No.: SDG No.: 24353

Matrix (soil/water): WATER Lab Sample ID: T435316

Level (low/med): LOW Date Received: 07/08/95

% Solids: 0.0

Concentration Units (ug/L or mg/kg dry weight): MG/L

CAS No.	Analyte	Concentration	C	Q	M
7440-38-2	Arsenic	0.056	U		P
7440-39-3	Barium	0.49			P
7440-43-9	Cadmium	0.0050	U		P
7440-47-3	Chromium	0.0081	U		P
7439-92-1	Lead	0.11			P
7439-97-6	Mercury	0.00020	U		CV
7782-49-2	Selenium	0.087	U		P
7440-22-4	Silver	0.0068	U		P

Color Before: Clarity Before: Texture:

Color After: Clarity After: Artifacts:

Comments:
A2-6 TCLP

FORM I - IN ILM03.0

U.S. EPA - CLP

1
INORGANIC ANALYSES DATA SHEET

EPA SAMPLE NO.

A2-7

Lab Name: NYTEST_ENV_INC Contract: 9521853

Lab Code: NYTEST Case No.: 24353 SAS No.: SDG No.: 24353

Matrix (soil/water): WATER Lab Sample ID: T435317

Level (low/med): LOW Date Received: 07/08/95

% Solids: 0.0

Concentration Units (ug/L or mg/kg dry weight): MG/L

CAS No.	Analyte	Concentration	C	Q	M
7440-38-2	Arsenic	0.056	U		P
7440-39-3	Barium	1.1			P
7440-43-9	Cadmium	0.0050	U		P
7440-47-3	Chromium	0.027			P
7439-92-1	Lead	0.16			P
7439-97-6	Mercury	0.00020			CV
7782-49-2	Selenium	0.087	U		P
7440-22-4	Silver	0.0068	U		P

Color Before: Clarity Before: Texture:

Color After: Clarity After: Artifacts:

Comments:
A2-7 TCLP

FORM I - IN ILM03.0

U.S. EPA - CLP

1
INORGANIC ANALYSES DATA SHEET

EPA SAMPLE NO.

A2-8

Lab Name: NYTEST_ENV_INC Contract: 9521852

Lab Code: NYTEST Case No.: 24353 SAS No.: _____ SDG No.: 24353

Matrix (soil/water): WATER Lab Sample ID: T435318

Level (low/med): LOW Date Received: 07/08/95

% Solids: 0.0

Concentration Units (ug/L or mg/kg dry weight): MG/L

CAS No.	Analyte	Concentration	C	Q	M
7440-38-2	Arsenic	0.056	U		P
7440-39-3	Barium	0.44			P
7440-43-9	Cadmium	0.0050	U		P
7440-47-3	Chromium	0.0081	U		P
7439-92-1	Lead	0.046	U		P
7439-97-6	Mercury	0.00020	U		CV
7782-49-2	Selenium	0.087	U		P
7440-22-4	Silver	0.0068	U		P

Color Before: _____ Clarity Before: _____ Texture: _____

Color After: _____ Clarity After: _____ Artifacts: _____

Comments:
A2-8 TCLP

FORM I - IN ILM03.0

U.S. EPA - CLP

1

INORGANIC ANALYSES DATA SHEET

EPA SAMPLE NO.

A2-9

Lab Name: NYTEST_ENV_INC Contract: 9521852

Lab Code: NYTEST Case No.: 24353 SAS No.: SDG No.: 24353

Matrix (soil/water): WATER Lab Sample ID: T435319

Level (low/med): LOW Date Received: 07/08/95

% Solids: 0.0

Concentration Units (ug/L or mg/kg dry weight): MG/L

CAS No.	Analyte	Concentration	C	Q	M
7440-38-2	Arsenic	0.056	U		P
7440-39-3	Barium	0.60			P
7440-43-9	Cadmium	0.0050	U		P
7440-47-3	Chromium	0.0081	U		P
7439-92-1	Lead	0.13			P
7439-97-6	Mercury	0.00020	U		CV
7782-49-2	Selenium	0.087	U		P
7440-22-4	Silver	0.0068	U		P

Color Before: Clarity Before: Texture:

Color After: Clarity After: Artifacts:

Comments:

A2-9 TCLP

FORM I - IN ILM03.0

U.S. EPA - CLP

1

INORGANIC ANALYSES DATA SHEET

EPA SAMPLE NO.

A2-10

Lab Name: NYTEST_ENV_INC Contract: 9521852

Lab Code: NYTEST Case No.: 24353 SAS No.: SDG No.: 24353

Matrix (soil/water): WATER Lab Sample ID: T435320

Level (low/med): LOW Date Received: 07/08/95

% Solids: 0.0

Concentration Units (ug/L or mg/kg dry weight): MG/L

CAS No.	Analyte	Concentration	C	Q	M
7440-38-2	Arsenic	0.056	U		P
7440-39-3	Barium	0.42			P
7440-43-9	Cadmium	0.0050	U		P
7440-47-3	Chromium	0.0081	U		P
7439-92-1	Lead	0.38			P
7439-97-6	Mercury	0.00020	U		CV
7782-49-2	Selenium	0.087	U		P
7440-22-4	Silver	0.0068	U		P

Color Before: Clarity Before: Texture:

Color After: Clarity After: Artifacts:

Comments:

A2-10 TCLP

FORM I - IN ILM03.0

U.S. EPA - CLP

1
INORGANIC ANALYSES DATA SHEET

EPA SAMPLE NO.

A3-1

Lab Name: NYTEST_ENV_INC Contract: 9521852

Lab Code: NYTEST Case No.: 24353 SAS No.: SDG No.: 24353

Matrix (soil/water): WATER Lab Sample ID: T435306

Level (low/med): LOW Date Received: 07/08/95

% Solids: 0.0

Concentration Units (ug/L or mg/kg dry weight): MG/L

CAS No.	Analyte	Concentration	C	Q	M
7440-38-2	Arsenic	0.056	U		P
7440-39-3	Barium	0.86			P
7440-43-9	Cadmium	0.0089			P
7440-47-3	Chromium	0.022			P
7439-92-1	Lead	0.92			P
7439-97-6	Mercury	0.00020	U		CV
7782-49-2	Selenium	0.087	U		P
7440-22-4	Silver	0.0068	U		P

Color Before: Clarity Before: Texture:

Color After: Clarity After: Artifacts:

Comments:
A3-1 TCLP

FORM I - IN ILM03.0

U.S. EPA - CLP

1
INORGANIC ANALYSES DATA SHEET

EPA SAMPLE NO.

A3-2

Lab Name: NYTEST_ENV_INC Contract: 9521852

Lab Code: NYTEST Case No.: 24353 SAS No.: SDG No.: 24353

Matrix (soil/water): WATER Lab Sample ID: T435307

Level (low/med): LOW Date Received: 07/08/95

% Solids: 0.0

Concentration Units (ug/L or mg/kg dry weight): MG/L

CAS No.	Analyte	Concentration	C	Q	M
7440-38-2	Arsenic	0.056	U		P
7440-39-3	Barium	0.94			P
7440-43-9	Cadmium	0.0083			P
7440-47-3	Chromium	0.012			P
7439-92-1	Lead	0.43			P
7439-97-6	Mercury	0.00020	U		CV
7782-49-2	Selenium	0.087	U		P
7440-22-4	Silver	0.0068	U		P

Color Before: Clarity Before: Texture:

Color After: Clarity After: Artifacts:

Comments:
A3-2 TCLP

U.S. EPA - CLP

1

INORGANIC ANALYSES DATA SHEET

EPA SAMPLE NO.

A3-3

Lab Name: NYTEST_ENV_INC Contract: 9521852

Lab Code: NYTEST Case No.: 24353 SAS No.: SDG No.: 24353

Matrix (soil/water): WATER Lab Sample ID: T435308

Level (low/med): LOW Date Received: 07/08/95

% Solids: 0.0

Concentration Units (ug/L or mg/kg dry weight): MG/L

CAS No.	Analyte	Concentration	C	Q	M
7440-38-2	Arsenic	0.056	U		P
7440-39-3	Barium	1.3			P
7440-43-9	Cadmium	0.0094			P
7440-47-3	Chromium	0.022			P
7439-92-1	Lead	0.91			P
7439-97-6	Mercury	0.00020	U		CV
7782-49-2	Selenium	0.087	U		P
7440-22-4	Silver	0.0068	U		P

Color Before: Clarity Before: Texture:

Color After: Clarity After: Artifacts:

Comments:

A3-3 TCLP

FORM I - IN ILM03.0

U.S. EPA - CLP

1

INORGANIC ANALYSES DATA SHEET

EPA SAMPLE NO.

A3 4

Lab Name: NYTEST_ENV_INC_____ Contract: 9521852___

Lab Code: NYTEST Case No.: 24353_ SAS No.: _____ SDG No.: 24353_

Matrix (soil/water): WATER Lab Sample ID: T435309

Level (low/med): LOW__ Date Received: 07/08/95

% Solids: __0.0

Concentration Units (ug/L or mg/kg dry weight): MG/L_

CAS No.	Analyte	Concentration	C	Q	M
7440-38-2	Arsenic__	0.056	U		P_
7440-39-3	Barium___	1.3			P_
7440-43-9	Cadmium__	0.013			P_
7440-47-3	Chromium_	0.051			P_
7439-92-1	Lead____	1.2			P_
7439-97-6	Mercury__	0.00020	U		CV
7782-49-2	Selenium_	0.087	U		P_
7440-22-4	Silver___	0.0068	U		P_

Color Before: _____ Clarity Before: _____ Texture: _____

Color After: _____ Clarity After: _____ Artifacts: _____

Comments:

A3-4_____TCLP_____

FORM I - IN ILM03.0

U.S. EPA - CLP

1
INORGANIC ANALYSES DATA SHEET

EPA SAMPLE NO.

A3-5

Lab Name: NYTEST_ENV INC_____ Contract: 9521852___

Lab Code: NYTEST Case No.: 24353_ SAS No.: _____ SDG No.: 24353_

Matrix (soil/water): WATER Lab Sample ID: T435310

Level (low/med): LOW__ Date Received: 07/08/95

% Solids: __0.0

Concentration Units (ug/L or mg/kg dry weight): MG/L_

CAS No.	Analyte	Concentration	C	Q	M
7440-38-2	Arsenic	0.056	U		P
7440-39-3	Barium	1.4			P
7440-43-9	Cadmium	0.013			P
7440-47-3	Chromium	0.083			P
7439-92-1	Lead	0.60			P
7439-97-6	Mercury	0.00020	U		CV
7782-49-2	Selenium	0.087	U		P
7440-22-4	Silver	0.0068	U		P

Color Before: _____ Clarity Before: _____ Texture: _____

Color After: _____ Clarity After: ___ Artifacts: _____

Comments:
A3-5_____TCLP_____

FORM I - IN ILM03.0

U.S. EPA - CLP

1
INORGANIC ANALYSES DATA SHEET

EPA SAMPLE NO.

A3-6

Lab Name: NYTEST_ENV_INC___ Contract: 9521852___

Lab Code: NYTEST Case No.: 24353_ SAS No.: _____ SDG No.: 24353_

Matrix (soil/water): WATER Lab Sample ID: T435301

Level (low/med): LOW__ Date Received: 07/08/95

% Solids: __0.0

Concentration Units (ug/L or mg/kg dry weight): MG/L_

CAS No.	Analyte	Concentration	C	Q	M
7440-38-2	Arsenic__	0.056	U		P_
7440-39-3	Barium___	0.45			P_
7440-43-9	Cadmium__	0.0050	U		P_
7440-47-3	Chromium_	0.0081	U		P_
7439-92-1	Lead____	0.048			P_
7439-97-6	Mercury__	0.00020	U		CV
7782-49-2	Selenium_	0.10			P_
7440-22-4	Silver__	0.0068	U		P_

Color Before: _____ Clarity Before: _____ Texture: _____

Color After: _____ Clarity After: _____ Artifacts: _____

Comments:
A3-6_____TCLP_____

FORM I - IN IIM03.0

M Corporation

CHAIN-OF-CUSTODY RECORD

Form 0010
Field Technical Services
Rev. 08/89

№ 109377

).H. MATERIALS CORP. • P.O. BOX 551 • FINDLAY, OH 45839-0551 • 419-423-3526

)JECT NAME: NAVY-McCallister
PROJECT LOCATION: Middletown, RI
)J. NO.: 6233
PROJECT CONTACT: Bob Lynch
PROJECT TELEPHONE NO.: 609 588-6324
ENT'S REPRESENTATIVE:
PROJECT MANAGER/SUPERVISOR: Ron Andersen/John Snowden

SAMPLE NUMBER	DATE	TIME	COMP	GRAB	SAMPLE DESCRIPTION (INCLUDE MATRIX AND POINT OF SAMPLE)	NUMBER OF CONTAINERS	TPH 8015/GRO/DRO	PCBs 8080	Total Lead	TCLP VOCs 1311/8240	TCLP SVOCs 1311/8270	TCLP Metals 1311/6010/7000			REMARKS
A3-6	7-6-95	1405	X		SOIL/SAND BLAST GRIT AREA 3 - #6	1x8 oz glass	X	X	X		X	X			
A3-6	7-6-95	1405		X	↓	2x40 ml				X					Note. Composite both vials prior to analysis
A1-1		1430	X		SOIL/SAND BLAST GRIT AREA 1 - #1	1x8 oz glass	X	X	X		X	X			
A1-1		1430		X	↓	2x40 ml				X					Composite as above
A1-2		1450	X		SOIL/SAND BLAST GRIT AREA 1 - #2	1x8 oz glass	X	X	X		X	X			
A1-2		1450		X	↓	2x40 ml				X					Composite as above
A1-3		1515	X		SOIL/SAND BLAST GRIT AREA 1 - #3	1x8 oz glass	X	X	X		X	X			
A1-3		1515		X	↓	2x40 ml				X					Composite as above
A1-4		1540	X		SOIL/SAND BLAST GRIT AREA 1 - #4	1x8 oz glass	X	X	X		X	X			
A1-4	↓	1540		X	↓	2x40 ml				X					Composite as above

TRANSFER NUMBER	ITEM NUMBER	TRANSFERS RELINQUISHED BY	TRANSFERS ACCEPTED BY	DATE	TIME
1	1-10	[signature]			
2	000001				
3					
4			Mel Lam	7/8/95	1000

Rec'd 6°C

REMARKS
- Samples cooled to 4° Celcius.
- Samples analyzed @ 7 day T.A.T.

Lab Contact: John Gaspari
NYTEST Environmental Labs
ph: 516 625-5500

SAMPLER'S SIGNATURE: [signature]

LAB COPY

HM Corporation

CHAIN-OF-CUSTODY RECORD

Form
Field Technical Services
Rev. 08/89

№ 109378

O.H. MATERIALS CORP. • P.O. BOX 551 • FINDLAY, OH 45839-0551 • 419-423-3526

PROJECT NAME: NAVY-McCallister
PROJECT LOCATION: Middletown, RI
PROJ. NO.: 16233
PROJECT CONTACT: Bob Lynch
PROJECT TELEPHONE NO.: 609 588-6324
CLIENT'S REPRESENTATIVE:
PROJECT MANAGER/SUPERVISOR: Ron Anderson / John Snowden

ITEM NO.	SAMPLE NUMBER	DATE	TIME	COMP	GRAB	SAMPLE DESCRIPTION (INCLUDE MATRIX AND POINT OF SAMPLE)	NUMBER OF CONTAINERS	TPH 8015/GRO/DRO	PCB's 8080	Total Lead						REMARKS
1	RB-01	7-7-95	1030		X	Water - Rinsate Blank	1x1L glass	X								Preserved w/ H_2SO_4 to pH <2
2	RB-01	↓	1030		X	↓	1x1L glass		X							
3	RB-01	↓	1030		X	↓	1x1L poly			X						Preserved w/ HNO_3 to pH <2
4																
5																
6																
7																
8																
9																
10																

TRANSFER NUMBER	ITEM NUMBER	TRANSFERS RELINQUISHED BY	TRANSFERS ACCEPTED BY	DATE	TIME
1	1-3	[signature]			
2	000002				
3					
4			[signature]	7/8/95	1000

Rec'd 6°C

REMARKS
- Samples cooled to 4°C.
- Samples analyzed @ 7 day T.A.T.

Lab: NYTEST
Contact: John Gaspari (516) 625-5500

SAMPLER'S SIGNATURE: [signature]

LAB COPY

OHM Corporation

CHAIN-OF-CUSTODY RECORD

Form 0019
Field Technical Services
Rev. 08/89

№ 109379

O.H. MATERIALS CORP. • P.O. BOX 551 • FINDLAY, OH 45839-0551 • 419-423-3526

PROJECT NAME: NAVY-McCallister
PROJECT LOCATION: Middletown, RI
PROJ. NO.: 16233
PROJECT CONTACT: Bob Lynch
PROJECT TELEPHONE NO.: 609 588-6324
CLIENT'S REPRESENTATIVE:
PROJECT MANAGER/SUPERVISOR: Ron Anderson / John Snowden

ITEM NO.	SAMPLE NUMBER	DATE	TIME	COMP	GRAB	SAMPLE DESCRIPTION (INCLUDE MATRIX AND POINT OF SAMPLE)	NUMBER OF CONTAINERS	TPH 8015/GRO/DRO	PCBs 8080	Total lead	TCLP VOCs 1311/8240	TCLP SVOCs 1311/8270	TCLP Metals 1311/6010/7000			REMARKS
1	A2-1	7-7-95	1100		X	SOIL/SAND BLAST GRIT AREA 2 - #1	1x8oz 2x40ml	X	X	X	X	X	X			Note: Add'l 40 ml VIAL collected for VOC analysis
2	A2-2		1115		X	SOIL/SAND BLAST GRIT AREA 2 - #2		X	X	X	X	X	X			
3	A2-3		1150		X	SOIL/SAND BLAST GRIT AREA 2 - #3		X	X	X	X	X	X			
4	A2-4		1310		X	SOIL/SAND BLAST GRIT AREA 2 - #4		X	X	X	X	X	X			
5	A2-5		1335		X	SOIL/SAND BLAST GRIT AREA 2 - #5		X	X	X	X	X	X			
6	A2-6		1400		X	SOIL/SAND BLAST GRIT AREA 2 - #6		X	X	X	X	X	X			
7	A2-7		1135		X	SOIL/SAND BLAST GRIT AREA 2 - #7		X	X	X	X	X	X			
8	A2-8		1355		X	SOIL/SAND BLAST GRIT AREA 2 - #8		X	X	X	X	X	X			
9	A2-9		1000		X	SOIL/SAND BLAST GRIT AREA 2 - #9		X	X	X	X	X	X			
10	A2-10		0940		X	SOIL/SAND BLAST GRIT AREA 2 - #10	1x8oz 1x40ml	X	X	X	X	X	X			

TRANSFER NUMBER	ITEM NUMBER	TRANSFERS RELINQUISHED BY	TRANSFERS ACCEPTED BY	DATE	TIME
1	(1-10)	Michael Gaudette			
2					
3					
4			Mark Lan	7/8/95	1000

REMARKS
- Samples cooled to 4° C.
- Samples analyzed @ 7 day T.A.T.
- Lab Contact: John Gaspari NYTEST Labs

SAMPLER'S SIGNATURE: Michael A. Gaudette

Rec'd 6° C

000003

LAB COPY

OHM Corporation

CHAIN-OF-CUSTODY RECORD

Form
Field Technical Services
Rev. 08/89

№ 109380

O.H. MATERIALS CORP. • P.O. BOX 551 • FINDLAY, OH 45839-0551 • 419-423-3526

PROJECT NAME: NAVY-McCallister
PROJECT LOCATION: Middletown, RI
PROJ. NO.: 16233
PROJECT CONTACT: Bob Lynch
PROJECT TELEPHONE NO.: 609 588-6324
CLIENT'S REPRESENTATIVE:
PROJECT MANAGER/SUPERVISOR: Ron Anderson / John Snowden

ANALYSIS DESIRED (INDICATE SEPARATE CONTAINERS)

ITEM NO.	SAMPLE NUMBER	DATE	TIME	COMP	GRAB	SAMPLE DESCRIPTION (INCLUDE MATRIX AND POINT OF SAMPLE)	NUMBER OF CONTAINERS	TPH 8015/GRO/DRO	PCB's 8080	Total Lead	TCLP VOC's 1311/8240	TCLP SVOC's 1311/8270	TCLP Metals 1311/6010/7000			REMARKS
1	A3-1	7-6-95	1030	X		SOIL / SAND BLAST GRIT AREA 3 - #1	1x 8 oz glass	X	X	X		X	X			
2	A3-1	↓	1030		X	↓	2x 40 ml				X					Note: Composite both ~~samples~~ vials prior to analysis
3	A3-2		1050	X		SOIL / SAND BLAST GRIT AREA 3 - #2	1x 8 oz glass	X	X	X		X	X			
4	A3-2		1050		X	↓	2x 40 ml				X					Composite as above
5	A3-3		1135	X		SOIL / SAND BLAST GRIT AREA 3 - #3	1x 8 oz glass	X	X	X		X	X			
6	A3-3		1135		X	↓	2x 40 ml				X					Composite as above
7	A3-4		1310	X		SOIL / SAND BLAST GRIT AREA 3 - #4	1x 8 oz glass	X	X	X		X	X			
8	A3-4		1310		X	↓	2x 40 ml				X					Composite as above
9	A3-5		1335	X		SOIL / SAND BLAST GRIT AREA 3 - #5	1x 8 oz glass	X	X	X		X	X			
10	A3-5	↓	1335		X	↓	2x 40 ml				X					Composite as above

TRANSFER NUMBER	ITEM NUMBER	TRANSFERS RELINQUISHED BY	TRANSFERS ACCEPTED BY	DATE	TIME
1	(1-10)	[signature]			
2					
3					
4			[signature]	7/8/95	1000

REMARKS
- All samples cooled to 4° Celcius.
- Samples analyzed @ 7 day T.A.T.

Lab Info: NYTEST Environmental labs
60 Seaview Blvd.
Port Washington, N.Y. 11050
Attn: John Gaspari (516) 625-5500

SAMPLER'S SIGNATURE: [signature]

Rec'd 6°C

LAB COPY

APPENDIX B UST ANALYTICAL RESULTS

CERTIFICATE OF ANALYSIS

In Response To The Future

Client: OHM Corporation

Client Project ID: Macalister Landfill

ESS Project ID: 954832

Client Sample ID: DSYT01

ESS Sample ID: 954832-01

Parameter	Result	Units	MRL	Method
Total Petroleum Hydrocarbon				
Gasoline Range	ND	mg/L	1	8015M
Diesel Range	ND	mg/L	1	D3328-78

ND = Not Detected above Method Reporting Limit (MRL)

Approved by: _____

Date: 14 Nov 95

002

Environmental Science Services
532 Atwells Avenue, Providence, Rhode Island 02909 (401) 421-0398 Fax. (401) 421-5731

REGISTERED QUALITY SYSTEM REGISTRATION

CERTIFICATE OF ANALYSIS

In Response To The Future

SAMPLE SUMMARY PAGE

Client: OHM Corporation

Client Project ID: Macalister Landfill

ESS Project ID: 954832

Client Sample ID: SDYT02

ESS Sample ID: 954832-02

Parameter	Results	Units	MRL	Method
Toxicity Characteristic Leaching Procedure				1311
Volatile Organics	ND	mg/L	Attached	8260
Semivolatile Organics	ND	mg/L	Attached	8270
Metals	ND	mg/L	Attached	6010

ND = Not Detected above Method Reporting Limit (MRL)

Approved by: _____

Date: 11/14/95

003

Environmental Science Services
532 Atwells Avenue, Providence, Rhode Island 02909 (401) 421-0398 Fax. (401) 421-5731

QUALITY SYSTEM REGISTRATION

CERTIFICATE OF ANALYSIS

In Response To The Future

TOXICITY CHARACTERISTICS LEACHING PROCEDURE (TCLP)

VOLATILE ORGANICS

Client: OHM Corporation

Client Project ID: Macalister Landfill Date Sampled: 10/30/95

Client Sample ID: DSYT02 Date TCLP Performed: 11/3/95

ESS Sample ID: 954832-02 Date Leachate Analyzed: 11/3/95

Target Analyte	Result	Units	MRL	Method
TCLP Extraction				1311
Benzene	ND	mg/L	0.01	8260
Carbon Tetrachloride	ND	mg/L	0.01	8260
Chlorobenzene	ND	mg/L	0.01	8260
Chloroform	ND	mg/L	0.01	8260
1,4 Dichlorobenzene	ND	mg/L	0.01	8260
1,2 Dichloroethane	ND	mg/L	0.01	8260
1,1 Dichloroethene	ND	mg/L	0.01	8260
Methyl Ethyl Ketone	ND	mg/L	1.0	8260
Tetrachloroethene	ND	mg/L	0.01	8260
Trichloroethene	ND	mg/L	0.01	8260
Vinyl Chloride	ND	mg/L	0.01	8260

ND = Not Detected above Method Reporting Limit (MRL)

Approved by: Kelly DeSousa Date: 11/13/95

Environmental Science Services
532 Atwells Avenue, Providence, Rhode Island 02909 (401) 421-0398 Fax. (401) 421-5731

REGISTERED QUALITY SYSTEM REGISTRATION

CERTIFICATE OF ANALYSIS

In Response To The Future

TOXICITY CHARACTERISTICS LEACHING PROCEDURE (TCLP)

SEMIVOLATILE ORGANICS

Client: OHM Corporation

Client Project ID: Macalister Landfill

Client Sample ID: DSYT02

ESS Sample ID: 954832-02

Date Sampled: 10/30/95

Date TCLP Performed: 11/1/95

Date Leachate Extracted: 11/2/95

Date Extract Analyzed: 11/3/95

Target Analyte	Result	Units	MRL	Method
TCLP Extraction				1311
2,4-Dinitrotoluene	ND	mg/L	0.05	8270
Hexachlorobenzene	ND	mg/L	0.05	8270
Hexachloro-1,3-butadiene	ND	mg/L	0.05	8270
Hexachloroethane	ND	mg/L	0.3	8270
Nitrobenzene	ND	mg/L	0.2	8270
Methylphenols (Total)	ND	mg/L	1.0	8270
Pentachlorophenol	ND	mg/L	1.0	8270
2,4,5-Trichlorophenol	ND	mg/L	1.0	8270
2,4,6-Trichlorophenol	ND	mg/L	0.2	8270
Pyridine	ND	mg/L	0.5	8270

ND = Not Detected above Method Reporting Limit (MRL)

Approved by: _____ Date: 11/13/95

Environmental Science Services
532 Atwells Avenue, Providence, Rhode Island 02909 (401) 421-0398 Fax. (401) 421-5731

QUALITY SYSTEM REGISTRATION

CERTIFICATE OF ANALYSIS

In Response To The Future

TOXICITY CHARACTERISTICS LEACHING PROCEDURE (TCLP)

METALS

Client: OHM Corporation

Client Project ID: Macalister Landfill

Date Sampled: 10/30/95

Client Sample ID: DSYT02

Date TCLP Performed: 11/1/95

ESS Sample ID: 954832-02

Date Extract Analyzed: 11/9/95

Target Analyte	Result	Units	MRL	Method
TCLP Extraction				1311
Arsenic	ND	mg/L	0.5	6010
Barium	ND	mg/L	5.0	6010
Cadmium	ND	mg/L	0.1	6010
Chromium	ND	mg/L	0.5	6010
Lead	ND	mg/L	0.5	6010
Mercury	ND	mg/L	0.02	7470
Selenium	ND	mg/L	0.3	6010
Silver	ND	mg/L	0.5	6010

ND = Not Detected above Method Reporting Limit (MRL)

Approved by: Bill

Date: 11/14/95

006

Environmental Science Services
532 Atwells Avenue, Providence, Rhode Island 02909 (401) 421-0398 Fax. (401) 421-5731

QUALITY SYSTEM REGISTRATION

QUALITY CONTROL SECTION

CERTIFICATE OF ANALYSIS

In Response To The Future

TOTAL PETROLEUM HYDROCARBON-GC
SURROGATE RECOVERY

Client: OHM Corporation

Client Project ID: Macalister Landfill

ESS Project ID: 954832

SAMPLE ID	o-Terphenyl (50-150%) #
GC1102B2	104%
954832-01	106

Column to be used to flag recovery values with an asterisk when outside of Advisory Limits.

Approved by: _____

Date: 11/13/95

008

Environmental Science Services
532 Atwells Avenue, Providence, Rhode Island 02909 (401) 421-0398 Fax. (401) 421-5731

QUALITY SYSTEM REGISTRATION

CERTIFICATE OF ANALYSIS

In Response To The Future

TOTAL PETROLEUM HYDROCARBON GC/FID
ASTM (Modified) D3328-78

Client: OHM Corporation

Client Project ID: Macalister Landfill

ESS Project ID: 954832

Client Sample ID: Method Blank

ESS Sample ID: GC1102B2

Date Sampled: N/A

Date Extracted: 11/2/95

Date Analyzed: 11/3/95

Dilution Factor: 1x

Parameter	Result (mg/L)	MRL
Total Petroleum Hydrocarbon	ND	1

N/A = Not Applicable

ND = Not Detected above Method Reporting Limit (MRL)

Approved by: _____

Date: 11/13/95

009

Environmental Science Services
532 Atwells Avenue, Providence, Rhode Island 02909 (401) 421-0398 Fax. (401) 421-5731

QUALITY SYSTEM REGISTRATION

CERTIFICATE OF ANALYSIS

In Response To The Future

VOLATILE ORGANICS AQUEOUS SURROGATE RECOVERY

Client: OHM Corporation

Client Project ID: Macalister Landfill

ESS Project ID: 954832

SAMPLE	DCE#	TOL#	BFB#
V1106B1	94%	98%	100%
954832-01	95	96	101

Column to be used to flag recovery values with an asterisk when outside the quality control range.

DCE = 1,2 DICHLOROETHANE-D4 (76-114%)
TOL = TOLUENE-D8 (86-110%)
BFB = BROMOFLUOROBENZENE (86-115%)

Approved by: Kelly DeSousa

Date: 11/13/95

010

Environmental Science Services
532 Atwells Avenue, Providence, Rhode Island 02909 (401) 421-0398 Fax. (401) 421-5731

QUALITY SYSTEM REGISTRATION

CERTIFICATE OF ANALYSIS

In Response To The Future

TOXICITY CHARACTERISTICS LEACHING PROCEDURE (TCLP)

VOLATILE SURROGATE RECOVERY

Client: OHM Corporation

Client Project ID: Macalister Landfill ESS Project ID: 954832

SAMPLE	DCE#	TOL#	BFB#
V1103B2	104%	105%	106%
954832-02	104	104	105
954832-02MS	113	103	106

Column used to flag recovery with an asterisk when the volume is outside the quality control range.

DCE = 1,2 DICHLOROETHANE-D4 (76-114%)
TOL = TOLUENE-D8 (86-110%)
BFB = BROMOFLUOROBENZENE (86-115%)

Approved by: Kelly DeSousa Date: 11/13/95

011

Environmental Science Services
532 Atwells Avenue, Providence, Rhode Island 02909 (401) 421-0398 Fax. (401) 421-5731

QUALITY SYSTEM REGISTRATION

CERTIFICATE OF ANALYSIS

In Response To The Future

TOXICITY CHARACTERISTICS LEACHING PROCEDURE (TCLP)

VOLATILE ORGANICS

Client: OHM Corporation

Client Project ID: Macalister Landfill Date Sampled: N/A

Client Sample ID: Method Blank Date TCLP Performed: N/A

ESS Sample ID: V1103B2 Date Leachate Analyzed: 11/3/95

Target Analyte	Result	Units	MRL	Method
TCLP Extraction				1311
Benzene	ND	mg/L	0.01	8260
Carbon Tetrachloride	ND	mg/L	0.01	8260
Chlorobenzene	ND	mg/L	0.01	8260
Chloroform	ND	mg/L	0.01	8260
1,4 Dichlorobenzene	ND	mg/L	0.01	8260
1,2 Dichloroethane	ND	mg/L	0.01	8260
1,1 Dichloroethene	ND	mg/L	0.01	8260
Methyl Ethyl Ketone	ND	mg/L	1.0	8260
Tetrachloroethene	ND	mg/L	0.01	8260
Trichloroethene	ND	mg/L	0.01	8260
Vinyl Chloride	ND	mg/L	0.01	8260

N/A = Not Applicable

ND = Not Detected above Method Reporting Limit (MRL)

Approved by: Kelly DeSousa Date: 11/10/95

012

Environmental Science Services
532 Atwells Avenue, Providence, Rhode Island 02909 (401) 421-0398 Fax. (401) 421-5731

QUALITY SYSTEM REGISTRATION

CERTIFICATE OF ANALYSIS

In Response To The Future

MATRIX SPIKE ANALYSIS SUMMARY

TCLP VOLATILE ORGANICS

Client: OHM Corporation

TCLP Batch ID: 483202

Concentration in: mg/L

Target Analyte	Result	Spike Added	Spiked Result	Percent Recovery
Benzene	ND	0.050	0.053	106%
Carbon Tetrachloride	ND	0.050	0.050	100
Chlorobenzene	ND	0.050	0.054	108
Chloroform	ND	0.050	0.057	114
1,4 Dichlorobenzene	ND	0.050	0.053	106
1,2 Dichloroethane	ND	0.050	0.059	118
1,1 Dichloroethene	ND	0.050	0.052	104
Methyl Ethyl Ketone	ND	0.050	0.063	126
Tetrachlorethene	ND	0.050	0.053	106
Trichloroethene	ND	0.050	0.050	100
Vinyl Chloride	ND	0.050	0.041	82

This matrix spike analysis summary applies to the following samples: 954832-02

ND = Not Detected above Method Reporting Limit

Approved by: _____ Date: 14 Nov 95

Environmental Science Services
532 Atwells Avenue, Providence, Rhode Island 02909 (401) 421-0398 Fax. (401) 421-5731

QUALITY SYSTEM REGISTRATION
PRINTED ON RECYCLED PAPER

CERTIFICATE OF ANALYSIS

In Response To The Future

TOXICITY CHARACTERISTICS LEACHING PROCEDURE (TCLP)

ACID AND BASE/NEUTRAL SURROGATE RECOVERY

Client: OHM Corporation

Client Project ID: Macalister Landfill ESS Project ID: 954832

SAMPLE ID	2FP#	PHL#	2CP#	TBP#	DCB#	NBZ#	FBP#	TPH#
S1102B1	56%	56%	81%	93%	68%	65%	63%	67%
954832-02	51	49	71	83	63	62	66	66

Column used to flag recovery with an asterisk when the value is outside the quality control range.

2CP = 2-CHLOROPHENOL-D4 (33-110%)
PHL = PHENOL-D5 (10-110%)
2FP = 2-FLUOROPHENOL (21-110%)
TBP = 2,4,6 TRIBROMOPHENOL (10-123%)
DCB = 1,2-DICHLOROBENZENE-D4 (16-110%)
NBZ = NITROBENZENE-D5 (35-114%)
FBP = 2-FLUOROBIPHENYL (43-116%)
TPH = P-TERPHENYL-D14 (33-141%)

Approved by: _____ Date: 11/13/95

Environmental Science Services
532 Atwells Avenue, Providence, Rhode Island 02909 (401) 421-0398 Fax. (401) 421-5731

QUALITY SYSTEM REGISTRATION
PRINTED ON RECYCLED PAPER

CERTIFICATE OF ANALYSIS

In Response To The Future

TOXICITY CHARACTERISTICS LEACHING PROCEDURE (TCLP)

SEMIVOLATILE ORGANICS

Client: OHM Corporation

Client Project ID: Macalister Landfill

Client Sample ID: Method Blank

ESS Sample ID: S1102B1

Date Sampled: N/A

Date TCLP Performed: N/A

Date Leachate Extracted: 11/2/95

Date Extract Analyzed: 11/3/95

Target Analyte	Result	Units	MRL	Method
TCLP Extraction				1311
2,4-Dinitrotoluene	ND	mg/L	0.05	8270
Hexachlorobenzene	ND	mg/L	0.05	8270
Hexachloro-1,3-butadiene	ND	mg/L	0.05	8270
Hexachloroethane	ND	mg/L	0.3	8270
Nitrobenzene	ND	mg/L	0.2	8270
Methylphenols (Total)	ND	mg/L	1.0	8270
Pentachlorophenol	ND	mg/L	1.0	8270
2,4,5-Trichlorophenol	ND	mg/L	1.0	8270
2,4,6-Trichlorophenol	ND	mg/L	0.2	8270
Pyridine	ND	mg/L	0.5	8270

N/A = Not Applicable

ND = Not Detected above Method Reporting Limit (MRL)

Approved by: _____ Date: 11/13/95

015

Environmental Science Services
532 Atwells Avenue, Providence, Rhode Island 02909 (401) 421-0398 Fax. (401) 421-5731

REGISTERED QUALITY SYSTEM REGISTRATION

PRINTED ON RECYCLED PAPER

CERTIFICATE OF ANALYSIS

In Response To The Future

MATRIX SPIKE ANALYSIS SUMMARY

TCLP SEMIVOLATILE ORGANICS

Client: OHM Corporation

TCLP Batch ID: 302201 Concentration in: mg/L

Target Analyte	Result	Spike Added	Spiked Result	Percent Recovery
2,4-Dinitrotoluene	ND	0.2	0.25	125%
Hexachlorobenzene	ND	0.2	0.19	95
Hexachloro-1,3-butadiene	ND	0.2	0.21	105
Hexachloroethane	ND	0.2	0.19	95
Nitrobenzene	ND	0.2	0.20	100
Methylphenols (total)	ND	0.6	0.58	98
Pentachlorophenol	ND	0.2	0.16	80
2,4,5-Trichlorophenol	ND	0.2	0.26	130
2,4,6-Trichlorophenol	ND	0.2	0.25	125
Pyridine	ND	0.2	0.11	55

This matrix spike analysis summary applies to the following samples: 954832-02

ND = Not Detected above Method Reporting Limit

Approved by: _____ Date: 14/1/95

016

Environmental Science Services
532 Atwells Avenue, Providence, Rhode Island 02909 (401) 421-0398 Fax. (401) 421-5731

QUALITY SYSTEM REGISTRATION

PRINTED ON RECYCLED PAPER

CERTIFICATE OF ANALYSIS

In Response To The Future

MATRIX SPIKE ANALYSIS SUMMARY

TCLP METALS

Client: OHM Corporation

TCLP Batch ID: 446201

Concentration in: mg/L

Target Analyte	Result	Spike Added	Spiked Result	Percent Recovery
Arsenic	ND	5.00	4.64	93%
Barium	ND	100	80.2	80
Cadmium	ND	1.00	0.92	92
Chromium	ND	5.00	4.59	92
Lead	ND	5.00	4.61	92
Selenium	ND	1.00	0.98	98
Silver	ND	5.00	4.83	97

This matrix spike analysis summary applies to the following samples:
954832-02

ND = Not Detected above Method Reporting Limit (MRL)

Approved by: _____

Date: 14/6/95

017

Environmental Science Services
532 Atwells Avenue, Providence, Rhode Island 02909 (401) 421-0398 Fax. (401) 421-5731

QUALITY SYSTEM REGISTRATION

OHM Remediation Services Corp.

CHAIN-OF-CUSTODY RECORD

954832

LAB

Form 0019
Field Technical Services
Rev. 08/89

157099

O.H. MATERIALS CORP. • P.O. BOX 551 • FINDLAY, OH 45839-0551 • 419-423-3526

PROJECT NAME: MACALISTER LANDFILL
PROJECT LOCATION: Middletown, RI
PROJ. NO.: 16233
PROJECT CONTACT: John Snowden
PROJECT TELEPHONE NO.: (401) 846-2481
CLIENT'S REPRESENTATIVE: Dave Doroc Z
PROJECT MANAGER/SUPERVISOR: John Snowden

ANALYSIS DESIRED (INDICATE SEPARATE CONTAINERS): TPH (P), TCLP (metals, VOCs, SVOCs)

ITEM NO.	SAMPLE NUMBER	DATE 95	TIME	COMP	GRAB	SAMPLE DESCRIPTION (INCLUDE MATRIX AND POINT OF SAMPLE)	NUMBER OF CONTAINERS	TPH (P)	TCLP (metals, VOCs, SVOCs)	REMARKS
1	DSYT01	10/30	1315		X	Water from UST at Director Ship yard, Cloudy	1x950 mL	X		Preserved w/ H_2SO_4 to < 2 pH
2	DSYT02	10/30	1320		X	Water from UST at Director Ship yard, Cloudy	2x950 mL		X	not preserved
3										
4										
5										
6										
7										
8										
9										
10										

TRANSFER NUMBER	ITEM NUMBER	TRANSFERS RELINQUISHED BY	TRANSFERS ACCEPTED BY	DATE 95	TIME
1	1-2	[signature]	Fed. Ex.	10/30	1700
2	1-2	Fedex 7205310206	Angela D. Schimmel	10-31-95	1047
3	1,2	[signature]	Fedex 772-0641-397	10-31-95	16:30
4	1,2	[signature]		11/1/95	1630

REMARKS
* 5 day TAT
* Preserved at 4° C
* Temp. Blank included
* Fax Results to (401) 846-3239

7°C

SAMPLER'S SIGNATURE: [signature]