N62661 AR 001213
NAVSTA NEWPORT RI
5090 3a
ID-00042

TETRA TECH NUS, INC.
55 Jonspin Road ▪ Wilmington, MA 01887-1020
(978) 658-7899 ▪ FAX (978) 658-7870 ▪ www.tetratech.com

C-NAVY-4-99-1345W

45848

April 22, 1999

Project Number 7752

Mr. Paul Kulpa
Remedial Project Manager
Office of Waste Management
Rhode Island Department of Environmental Management
235 Promenade Street
Providence Rhode Island 02908-5767

Reference: CLEAN Contract No. N62472-90-D-1298
Contract Task Order No. 0302 - Naval Station Newport, Newport Rhode Island

Subject: Costing Documentation
Draft Final Feasibility Study Report, Derecktor Shipyard/Coddington Cove
Naval Station Newport, Newport Rhode Island

Dear Mr. Kulpa:

Enclosed is information you requested supporting the cost estimates presented in the Draft Final Feasibility Study Report (FS) referenced above. Most of the dredging estimates were provided by J.D. Meager and Associates for McAllister Point Landfill. When contacted regarding the Derecktor project, representatives stated that the high silt content would complicate the effort, but the cost differential would be offset by the lack of debris that would require sorting, so the overall pricing would be the same.

As I am sure you are aware, the estimates presented in the FS are developed for the comparison of alternatives. Many contingencies are included that may not be needed after the predesign work has been completed. A more accurate cost estimate would be developed after a design of the action has been prepared.

If you have any questions regarding this material, please do not hesitate to contact me.

Very truly yours,

Stephen S. Parker
Project Manager

SSP/
attachment

c: J. Shafer, U.S. Navy Northdiv (w/o encl.)
M. Griffin, NSN (w/o encl.)
J. Trepanowski/G. Glenn, TtNUS (w/o encl.)
File 7752-3.2 (w/o encl.)

bc: File 7752-8.0 (w/encl. - 1)

Under Water Dredging:

J.D. Meagher/represents Philip Services Corp., Allwaste, and Serv-Tech
P.O. Box 752
Westborough, MA 01581
tel.: 508-366-6606/800-272-7388 fax: 508-366-6662
contact: Jim

Excavating 800' x 100' x 2' (6000 cy at 2800lb/cy = 8400 tons)

Costs:

Grappling and Debris Removal to take 20 days	
(using clam shell on 30' x 90' barge with 20' x 60' trash scow)	
Equipment and crew ($8.6K/day)	$172K
Mob & Demob	$45K
Clam Shell Dredging to take 25 days	
(dredging mostly sandy sediment ar 250 cy/day to scow; including silt screens)	
Equipment and crew ($8.6K/day)	$172K
Mob & Demob	$65K
Treatment of Scow Decanted Water to take 50 days	
(removal of TSS to 45 mg/l at 300gpm on barge)	
Equipment, crew, and chemicals ($4.5K/day)	$225K
Mob & Demob	$45K
Transfer of Sediment & Debris from scow to trucks to take 50 days	
(using truck mounted clam shell)	
Equipment and crew ($6.5K/day)	$325K
Mob & Demob	$12.6K
Transportation and Disposal ($130/ton x 8400 tons)	$1092K
TOTAL	$2153.6K
	(~2.2M; $260/ton; $360/cy)

(Note: If no shoreline staging area near site activities, can use facilities at Northland Facility in Providence, RI with bulkhead rental of $3K/day for 50 days or $150K)

Recommends clamshell dredge (typically 1 - 6 cy capacity). Suggests doing predredge grappling to remove large objects while minimizing resuspension of sediments. Suggests shore

survey by dive team, plot of shoreline, pick out visible stuff with first pass of clamshell, and then dredge sediments. Will use silt screens but may not be effective.

Processing options for dredged sediment:

processing near site -

- dredged sediment settles in scow; water is decanted off top; dewatered sediments will be ~65% solids if original sediments were 80-100% sand (or ~28-38% solids if had alot of silt and clay originally); increase detention time in settling tank and/or settling area (from 1000 sq ft to 3000 sq ft) if high silt content in seds
- water treated and discharged to bay - clarifier and membrane filter on skid; designed to reduce TSS to <40 mg/l and thereby reduce PCBs to <5mg/l; need permit; need testing prior to initial discharge and then continous monitoring (Note: Look at regs for industrial discharge to open water - PCBs are usually 1-5 ppm and metals are site specific)
- dewatered sediments transferred from scow to rolloff for transport to TSDF
- need shoreline work area - 200' x 60' staging area with utilities and bulkhead; bring scow to bulkhead for transfer/transport of dewatered sediments

processing away from site

- have RI state-permitted facility in Providence (4 miles away by water) - Northland Environmental at 275 Allens Drive near Commercial Wharf
- can treat water and discharge to bay
- has permitted TSDF to handle sediments
- have docking/bulkhead rental fee

Could do manual, pneumatic dredging. Very time consuming. Removes 2.5 - 4 cy/hr versus 40 cy/hr with clamshell. Check with Mark Judd of Buffalo Industrial Diving (716-822-2289) regarding manual, pneumatic dredging (removing seds near dam at GE site).

Could lay down armorment instead of dredging (cap with grout-filled sausages spaced 4 ft apart) for $80-140/cy???? May not need geotextile or geomembrane???? Check with Mark Judd of Industrial Diving

Jim would like the following info to be collected pre-design:

- coring data - grain size distribution with hydrometer testing on seds passing 200 mesh (Are 200-400 mesh size particles clay or silt?)

- velocity of water in work area (linear ft/sec) during low, medium, and high tides
- utilities availability near shore
- availability near site for 200' x 60' staging area - want to bring in scow of 100'(l) x 20'(w) x 9'(d) to tie up to dock or bulkhead for transport of sediments

Received price quote and description 9/13/97. (All info complete for nearshore sediment dredging.)

TELEPHONE CONVERSATION REPORTING FORM

RECORDED BY: Pat Suetaka	FILE NUMBER: N7752-1.0
CALL ☐ TO ☐ FROM — NAME: Bob Richardson	TELEPHONE NUMBER:
COMPANY: RIDEM	TELEPHONE NUMBER: 401-222-6519 X7240 4700
ADDRESS:	DATE OF CALL: 1-26-99
CONFERENCE CALL: ☑ NO ☐ YES (If YES, list conferees, conferees company, etc. in notes.)	TIME: 11:30 ☑ A.M. ☐ P.M.
CLIENT/PROJECT: Navy Clean / Derecktor	JOB NUMBER: N7752-0640
SUBJECT: Feasibility Study - regs	

CONVERSATION NOTES:

11:30 AM PS left message - looking for regs entitled: RI Pollutant Discharge Elimination Systems ; Rules & Regs Pertaining to Operation & Maintenance of Wastewater Treatment Facilities

12:20 PM B.R left message - Bob to pass request to Bill Pottenow to send O+M regs; Bob will send NPDES regs - will ask operator for address.

ACTION/RESPONSE		
RESPONSIBLE PERSON	ACTION NEEDED	DUE DATE

COPIES TO: S Parker

RECORDER'S SIGNATURE: PAS Suetaka

Order No. 11028 (12-90)

TELEPHONE CONVERSATION REPORTING FORM

1 of 1

RECORDED BY: P Svetaka	FILE NUMBER: N7752-~~0640~~ 1.0
CALL ☐ TO ☐ FROM — NAME:	TELEPHONE NUMBER:
COMPANY: Peroxidation Systems Inc.	TELEPHONE NUMBER:
ADDRESS: Tucson, AZ	DATE OF CALL: 1-22-99
CONFERENCE CALL ☐ NO ☐ YES (If YES, list conferees, conferees company, etc. in notes.)	TIME ☐ A.M. ☐ P.M.
CLIENT/PROJECT: Navy/ Derector	JOB NUMBER: N7752-0640
SUBJECT: Feasibility Study — UV Oxidation	

CONVERSATION NOTES:

call info for current phone #s:

520-790-8383 — disconnected

520-889-6141 — "

520-573-6565 - This is Peroxidation Systems Laboratory. Not the correct company. They thought PSI had moved in Pennsylvania.

spoke w/ Liyang Chu, He thought PSI bought by Vulcan. Searched internet and found phone # for Vulcan Chemical/UV Oxid. in Birmingham, AL at 800-633-8280. Person at Vulcan said UV oxid process was sold off. He thought it went to Calgon at 800-552-8064. This #s been disconnected.

Had old card for Ultrox (714-545-5557) but call was to a person phone. Searched internet and found connection between Ultrox and U.S.Filter/Zimpro, Inc. Called info for phone # for U.S.Filter in Pittsburgh, PA None listed. Knew there had been an office outside Pittsburgh in ~1995.

Got phone # for Zimpro, Inc in Pittsburgh at 412-892-2000.

ACTION/RESPONSE

RESPONSIBLE PERSON	ACTION NEEDED	DUE DATE

COPIES TO: S Parker

RECORDER'S SIGNATURE: PASvetaka

Order No. 11028 (12-90)

PHONE CONVERSATION REPORTING FORM

LOT L

FILE NUMBER	
RECORDED BY	TELEPHONE NUMBER
CALL ☐ TO ☐ FROM — NAME	TELEPHONE NUMBER
COMPANY	DATE OF CALL
ADDRESS	TIME ☐ A.M. ☐ P.M.
CONFERENCE CALL ☐ NO ☐ YES *(If YES, list conferees, conferees company, etc. in notes.)*	JOB NUMBER
CLIENT/PROJECT	
SUBJECT	

CONVERSATION NOTES:

Huntington Beach, CA.

Called 412-892-2000. No longer associated w/ Zimpro. Gave #s of 714-545-5557 and 800-826-1476. Called the 800 # → got U.S. Filter/Zimpro. !!! Left message for Bill Kulpa

ACTION/RESPONSE		
RESPONSIBLE PERSON	ACTION NEEDED	DUE DATE

COPIES TO:

RECORDER'S SIGNATURE

Order No. 11028 (12-90)

PDI Alternative 3A					
Item	**Number of Units**	**Unit**	**Rate**	**TOTAL**	
Mob/Demob	1	Lump	$ 13,500	$ 13,500	Includes Contracting actions
Vibracores	34	Station	$ 800	$ 27,200	Includes Navigation, labor, equi
Biota Samples	0	Sample	$ 1,043	$ -	
Sediment	136	Sample	$ 130	$ 17,680	
QC	27	Sample	$ 465	$ 12,648	
	0	$ -	$ -	$ -	
	0	$ -	-	$ -	
Mgmt/Oversight	208	Hours	$ 60	$ 12,480	
Data Valid Tier 2	76.16	Hours	$ 45	$ 3,427	
Report Prep	150	Hours	$ 53	$ 7,875	
Review	12	Hours	$ 98	$ 1,170	
Publication Dist	12	Hours	$ 35	$ 420	
ODCs	1	Lump	$ 3,000	$ 3,000	
				$ 99,400	
Source of costs:	Ocean Surveys Inc, Brown and Root Environmental NUSC				
	Disposal Area Negotiated Costs CTO 286				

PDI Alternative 3B					
Item	**Number of Units**	**Unit**	**Rate**	**TOTAL**	
Mob/Demob	1	Lump	$ 13,500	$ 13,500	Includes contracting actions
Vibracores	78	Station	$ 800	$ 62,400	Includes nav, labor, and equip
Biota Samples	0	Sample	$ 1,043	$ -	
Sediment	312	Sample	$ 130	$ 40,560	
QC	62	Sample	$ 465	$ 29,016	
	0	$ -	$ -	$ -	
	0	$ -	-	$ -	
Mgmt/Oversight	416	Hours	$ 60	$ 24,960	
Data Valid Tier 2	174.72	Hours	$ 45	$ 7,862	
Report Prep	250	Hours	$ 53	$ 13,125	
Review	12	Hours	$ 98	$ 1,170	
Publication Dist	12	Hours	$ 35	$ 420	
ODCs	1	Lump	$ 3,000	$ 3,000	
				$ 196,013	
Source of costs:	Ocean Surveys Inc, 1998, and Brown & Root : NUSC				
	Disposal Area Negotiated Costs CTO 286				

Access Restriction/Institutional Control				
Item	**Number of**			**TOTAL**
	Units	**Unit**	**Rate**	
Navy Access Restriction (1)				
Purchase Cost, 6 Buoys	6	Buoys	$ 2,000	$ 12,000
Purchase Cost 2 Signs	2	Signs	$ 1,200	$ 2,400
Mooring Maintenance	30	Years	$ 1,800	$ 27,000
Buoy Maintenance	30	Years	$ 3,000	$ 15,000
Fencing at Breakwater	50	Linear Feet	$ 28	$ 1,400
RIDEM Enforcement (2)				
Institution of Ban	1	Lump	$ 4,000	$ 4,000
Posting and Notification	30	Years	$ 500	$ 15,000
Enforcement Visits	60	Events	$ 240	$ 14,400
		TOTAL:		**$ 91,200**
Source of costs:	(1) - US Coast Guard Boston Aids to Navigation Office 8/98			
	"Fifth Class" steel warning buoys, 2'x8'			
	(2) - Actual costs for activity use limitation on property			
	Enforcement costs based on 2 notifications/boarding			
	per year (2 officers time plus equipment at commercial rates)			

Annual Monitoring, Alternative 2					
Item	**Number of**			**TOTAL**	
	Units	**Unit**	**Rate**		
Mob/Demob	1	Lump	$ 8,000	$ 8,000	
Collect Seds	10	Sample	$ 485	$ 4,850	
Collect Biota	10	Sample	$ 1,043	$ 10,430	
Navigation	10	Station	$ 210	$ 2,100	
		Bulk Chem	Tox		
Sediment	10	$ 1,537	$ 864	$ 24,010	
Biota	10	$ 1,367	-	$ 13,670	
Elutriate	10	$ 1,537	$ 662	$ 21,990	
Porewater	10	$ 460	-	$ 4,600	
Data Valid Tier 2	112	Hours	$ 45	$ 5,040	
Report Prep	90	Hours	$ 53	$ 4,725	
Review	12	Hours	$ 98	$ 1,170	
Publication Dist	12	Hours	$ 35	$ 420	
ODCs	1	Lump	$ 3,000	$ 3,000	
		TOTAL:		**$ 96,005**	
Source of costs:	Negotiated costs for Ecological Risk Assessment for				
	OFFTA, December 1997, CTO 269				

CALCULATION WORKSHEET Order No. 19116 (01-91)

PAGE _____ OF _____

CLIENT		JOB NUMBER	
SUBJECT Telecon: Lt. Karl Hansen USCG 617-223-8385			
BASED ON w/ Steve Parker B&R		DRAWING NUMBER	
BY	CHECKED BY	APPROVED BY	DATE 8/19/98

Q: What is needed for Navy to restrict access to their docks @ Newport?

KH: Need to go through RI CZM to assure compliance w/ state laws, but we allow marinas, private enterprises etc. to ~~ste~~ set their own markers, or we will do it @ cost.

Q: What is cost for buoy?

5th Class Can/Nun Hazard Markings steel
total height = 8'2"
Dia = 2'0"
AWL = 4'6"
BWL = 3'6"

Purchase = $2000
Inspect every 2 yrs replace chains
Pull every 6 yrs, sand blast paint return to service = $500 each

Est. Last 30 yrs - depends on Mtce, most times need is lost first.

CALCULATION WORKSHEET Order No. 19116 (01-91)

PAGE _____ OF _____

CLIENT		JOB NUMBER	
SUBJECT Telecon w/ Ocean Surveys Inc.			
BASED ON w/ Steve Porter		DRAWING NUMBER	
BY	CHECKED BY	APPROVED BY	DATE 9-1-98

VIBRACORE ESTS

OSI 203-388-4631

- Does ~ 25 coring projects per year

30' workboat / Barge, Sectional Barge - 18' wide
Diamond plate deck & engines ~ 10 knots

10' cores

2 3/4" ID Lexan Liner

Collect, Drain, Cap,

or use band saw to split,

Inspect and sample soil / seds.

BID TABULATION/JUSTIFICATION WORKSHEET (Federal Government Projects)

INQUIRY/REQUISITION NUMBER . S97-RAC1-010

TYPE BID:
WRITTEN X
TELEPHONE ____
TELEFAX ____

	1.	2.	3.	4.	5
NAME	AquaSurvey, Inc.	Ocean Surveys, Inc.			
ADDRESS	499 Point BreezeRd	91 Sheffield St.			
CITY, STATE	FlemingtonNJ 08822	OldSaybrookCT 06475			
PHONE/P.O.C.	9087888700/Wolfertz	8603884631/D.Bell			
PROPOSAL DATE	July 17, 1997	July 18, 1997			
DELIVERY DATE					
PAYMENT TERMS					
SHIP VIA/FOB POINT					
BONDS PROVIDED (CIRCLE APPROPRIATE)	YES NO	YES NO	YES NO	YES NO	
INSURANCE MET (CIRCLE APPROPRIATE)	YES NO	YES NO	YES NO	YES NO	

Average

ITEM NO	QTY.	DESCRIPTION OF SUPPLIES/SERVICES	UNIT PRICE	AMOUNT	UNIT PRICE	AMOUNT	UNIT PRICE	AMOUNT	UNIT PRICE	AMOUNT
1	lot	Mobilization/Demobilization	1,695.00	1,695.00	4,555.00	4,555.00	3125			
2	5day	Day Rate	3,595.00	17,975.00	2,890.00	14,450.00	3242			
3	20ea	Vibracore Liners	10.00	200.00	60.00	1,200.00	30			
4a	1drm	Drilling waste containerization	75.00	75.00	35.00	35.00	55			
4b	2hr	Movement of drilling waste containers	95.00	190.00	235.00	470.00	165			
5	1ea	Decontamination Event	140.00	140.00	N/A	N/A *	140			
6	1hr	Standby	500.00	500.00	235.00	235.00	—			
7		Multiplier Level C	1.35		1.05		—			
					*included	in Item 2				

This Est for work in Stratford CT
~ 4 Cores per day - depending on substrate
Per ASI

TAXES					
TRANSPORTATION CHARGES					
SUBTOTAL/TOTAL THIS PAGE					
TOTAL FROM CONTINUATION PAGE					
TOTAL SUPPLIER PROPOSAL THIS PAGE AND CONTINUATION	$ 20,775.00	$ 20,945.00	$	$	$

SOCIOECONOMIC STATUS: (CIRCLE APPLICABLE STATUS FOR EACH SUPPLIER)

L - LARGE
S - SMALL
WO - WOMAN OWNED
HBCU - HISTORICALLY BLACK COLLEGE/UNIVERSITY

	1.	2.	3.	4.
	L (S) SDB WO HBCU	L (S) SDB WO HBCU	L S SDB WO HBCU	L S SDB WO HBCU

— Lorraine Shipley - [illegible]
cap ~ 42,000 sq ft
volume placed 3,700 cu yd

Cost Estimate
for
Site 2 - Fenced Ordnance Burial Area

Naval Surface Warfare Center
Dahlgren Laboratory
Dahlgren, Virginia

Engineering Field Activity Chesapeake
Naval Facilities Engineering Command
Contract Number N62472-90-D-1298
Contract Task Order 0292

March 1998

applicable work
$ 614,115 or 14.62 sq ft

COST ESTIMATE
FOR
SITE 2 - FENCED ORDNANCE BURIAL AREA

NAVAL SURFACE WARFARE CENTER DAHLGREN LABORATORY
DAHLGREN, VIRGINIA

COMPREHENSIVE LONG-TERM
ENVIRONMENTAL ACTION NAVY (CLEAN) CONTRACT

Submitted to:
Engineering Field Activity Chesapeake
Environmental Branch Code 18
Naval Facilities Engineering Command
Washington Navy Yard, Building 212
Washington, D.C. 20374-2121

Submitted by:
Brown & Root Environmental
600 Clark Avenue, Suite 3
King of Prussia, Pennsylvania 19406-1433

CONTRACT NUMBER N62472-90-D-1298
CONTRACT TASK ORDER 0292

MARCH 1998

PREPARED BY:

Mark P. Speranza

MARK P. SPERANZA, P.E.
PROJECT MANAGER
BROWN & ROOT ENVIRONMENTAL
PITTSBURGH, PENNSYLVANIA

APPROVED BY:

JOHN J. TREPANOWSKI, P.E.
PROGRAM MANAGER
BROWN & ROOT ENVIRONMENTAL
KING OF PRUSSIA, PENNSYLVANIA

RCRA Cap Design
Site 2 - Fenced Ordnance Burial Area
CTO292 - NSWCDL, Dahlgren, VA

Cost Estimate/Schedule Assumptions

The following assumptions were made in developing the cost estimate and schedule for the above referenced project. Large deviations from these assumptions will impact project cost/duration.

- The prices which comprise the cost estimate were obtained from one of the following sources:
  ECHOS Environmental Restoration Unit Cost Book 1996.
  Costs were increased 4.7% to account for inflation.
  Means Site Work and Landscape Data, 16th Edition, 1997.
  Past experience on similar projects.

- Virginia State sales tax of 4.5% was added to all material costs.

- All work will be performed in Level D personnel protective equipment, with the exception of excavation of material to be consolidated under the cap which will be performed under Level D modified. Labor costs for Level D modified work were increased 18% to account for decreases in efficiency caused by PPE.

- The cost estimate was structured based on WBS Categories. Units of measure set forth in the WBS guidance documents were used.

- For purposes of developing this cost estimate, it was assumed that the RAC would rent all equipment.

- All material is being consolidated under the cap, with nothing going offsite for disposal.

- Site work project duration was estimated to be five months based on the following breakdown:

Mobilization		5 days
Includes installation/construction of temporary facilities, installation of fencing, site survey, clearing and grubbing		
Excavation - Clean Material	250 cy/day	6 days
Excavation - Material to be capped	100 cy/day	39 days
Includes shredding of debris and segregation of hazardous items not to be shredded.		
Construct Landfill Cap and Backfill Excavations		54 days
Demobilization		5 days
Includes revegetation, monitoring well installation, fence installation and removal, demobilization of facilities		

  Total: 109 days. Estimate 22 working days per month.
  Note: Time required for preparation of pre- and post-construction submittals is in addition to the durations outlined above.

- The following people were assumed for on site project oversight:

Site Supervisor	Project Geologist (quarter time)	Accountant
Job Foreman	Site Engineer	Project Manager (office)
Health and Safety Officer	Site Administrative Support	Project Engineer (office)

  Field crew of 8 was assumed to be hired locally. All project oversight personnel receive per diem for the first two weeks (14 days) on site.

- For assumptions on specific estimate line items refer to the attached Calculation Worksheets.

COST DEVELOPMENT SCHEDULE
NAVAL SURFACE WARFARE CENTER DAHLGREN LABORATORY
DAHLGREN, VIRGINIA
SITE 2 - FENCED ORDNANCE BURIAL AREA

ITEM	MULTIPLIER	FORMULA	ITEM COST	TOTAL
1) Base Wage Labor - Full Time			$290.831	
1a) Base Wage Labor - Part Time			$0	
2a) Fringe Benefit Rate - Full Time	28.00%	x1	$81.433	
2b) Fringe Benefit - Part Time	12.00%	x1a	$0	
2) TOTAL FRINGE BENEFIT		2a+2b	$81,433	
3) TOTAL DIRECT LABOR		11+1a+2	$372.264	
4) OHM OWNED EQUIPMENT COST			$0	
5) TOTAL OHM LABOR & EQUIPMENT COST		3+4		$372.264
6) OHM OVERHEAD	39.00%	X5		$145,183
7a) Team Sub -			$272.279	
7b) Team Sub -			$0	
7c) Team Sub -			$0	
7d) Other Sub Costs				
7) SUBCONTRACTOR COST		7a+7b+7c+7d		$272.279
8) TRAVEL COST (Flight & Meals)				
9) Rental Equipment			$130.774	
10) Inventory			$69.874	
11) Field Purchases			$0	
12) FOG - OHM Equipment			$0	
13) FOG Rental Equipment			$0	
14) TOTAL OTHER DIRECT COST		sum 9..13		$200.648
15) PROJECT SUPPLIES	4.00%	X(1+1a)		$11,633
15a) CONTRACTOR POLLUTION LIABILITY	3.00%	x(5+14+15)		$17,536
16) TOTAL DIRECT COST		5+6+7+8+14+15+15a		$1,019,543
17) G&A Expense (OHM)	9.00%	x(5+6+15+15a)	$49,195	
18) G&A Expense (Subcontract and ODC)	6.00%	x(7+8+14)	$28,376	
19) TOTAL G&A EXPENSE		17+18		$77,571
20) TOTAL DIRECT COST AND G&A		16+19		$1,097,114
21a) Prime Contractor Fee	10.00%	x(20-8-7)	$82,483	
21b) OHM fee on Subcontracts	5.00%	x7	$13,614	
21c) Team Subcontractor Fee	10.00%	x(7a+7b+7c)	$27,228	
21) TOTAL MAXIMUM AWARD FEE		21a+21b+21c		$123,325
22) FCCOM Labor	1.00%	x3	$3,723	
23) FCCOM Equipment	15.00%	x4	$0	
24) FCCOM G&A	0.20%	x(16-6-5)	$1,004	
25) FCCOM Project Supplies	2.00%	x15	$233	
26) TOTAL FCCOM		sum 22..25		$4,960
27) TOTAL ESTIMATED COST PLUS AWARD FEE		sum 20..26		$1,225,399

A–SUMMARY REPORT
SUBMITTAL:PRELIMINARY DRAFT
SOFTWARE VERSION: SUCCESS 3.0.018
REPORT WRITER VERSION: R&R 6.0
C:\SC30\SYSTEM\NAVFAC01.RP5 REPORT REVISION 2 NOVEMBER 1997

CONSTRUCTION CONTRACT: N6247093-D3032-015
DATABASE USED: N/A
PRINTING DATE: 13 March 1998
Page No. 1
ESTIMATE NAME: FINAL DESIGN ESTIMATE

PROJECT: SITE 2 - FENCED ORDNANCE BURIAL AREA RCRA CAP.
LOCATION: NSWCDL, DAHLGREN, VA
ESTIMATOR:
PROJECT SIZE: 1.00 LS
CONSTRUCTION FUNDS AVAILABLE: 0 USD
CURRENCY: DOLLARS

CAT CODE:
UIC:
PROJECT #: CTO 292
DATE OF ESTIMATE: 03/13/98
BID DATE:

WBS CODE	DESCRIPTION	COST/WBS BASED ON 1 LS	COST/ WBS UNIT	TOTAL MARKED UP COSTS MATL	LABOR	EQUIP	OTHER1	TC
	SITE 2 - RCRA CAP DESIGN , PROJECT TOTALS							7
	PROJECT SUBTOTALS			199,794	345,304	218,660	0	7
	MOBILIZATION AND PREPARATORY WORK			5,854	38,060	11,195	0	
	3301—MOB OF CONST EQUIPMENT AND FACILITIES			0	282	5,586	0	
	3301—MOB OF PERSONNEL			0	5,500	0	0	
	3301—PRECONST SUBMITTALS/IMPLEMENTATION PLANS			0	22,500	0	0	
	3301—SETUP/CONSTRUCT TEMPORARY FACILITIES			5,735	3,148	4,159	0	
	3301—TEMPORARY UTILITES			0	5,530	450	0	
	3301—OTHER			119	1,101	0	0	
	MONITORING, SAMPLING, TESTING, AND ANALYSIS			7,405	10,263	10,769	0	2
	3302—MONITORING WELL INSTALLATION			968	1,793	8,349	0	
	3302—LABORATORY CHEMICAL ANALYSIS			6,437	0	0	0	
	3302—GEOTECHNICAL INSTRUMENTATION			0	8,470	2,420	0	
	SITE WORK			43,846	38,483	69,636	0	15
	3303—DEMOLITION			0	752	1,053	0	
	3303—CLEARING AND GRUBBING			0	5,589	9,890	0	1
	3303—EARTHWORK			8,398	22,428	54,082	0	8
	3303—ROADS/PARKING/CURBS/WALKS			15,880	6,526	2,644	0	2
	3303—FENCING			18,605	2,524	1,109	0	2
	3303—CAP DRAINAGE TRANSFER PIPE			482	300	385	0	
	3303—LANDFILL DRAINAGE CHANNEL			482	363	472	0	
	SURFACE WATER COLLECTION AND CONTROL			1,700	743	1,092	0	3
	3305—SEDIMENT BARRIERS			810	403	12	0	1
	3305—OTHER			891	340	1,080	0	2
	SOLIDS COLLECTION AND CONTAINMENT			135,253	57,160	62,708	0	255

A–SUMMARY REPORT
SUBMITTAL:PRELIMINARY DRAFT
SOFTWARE VERSION: SUCCESS 3.0.018
REPORT WRITER VERSION: R&R 6.0
C:\SC30\SYSTEM\NAVFAC01.RP5 REPORT REVISION 2 NOVEMBER 1997

CONSTRUCTION CONTRACT: N6247093-D3032-0158
DATABASE USED: N/A
PRINTING DATE: 13 March 1998
Page No. 2
ESTIMATE NAME: FINAL DESIGN ESTIMATE

PROJECT: SITE 2 - FENCED ORDNANCE BURIAL AREA RCRA CAP
LOCATION: NSWCDL, DAHLGREN, VA
ESTIMATOR:
PROJECT SIZE: 1.00 LS
CONSTRUCTION FUNDS AVAILABLE: 0 USD
CURRENCY: DOLLARS

CAT CODE:
UIC:
PROJECT #: CTO 292
DATE OF ESTIMATE: 03/13/98
BID DATE:

WBS CODE	DESCRIPTION	COST/WBS BASED ON 1 LS	COST/ WBS UNIT	TOTAL MARKED UP COSTS MATL	LABOR	EQUIP	OTHER1	TOTAL
3308	—EXCAVATION			0	400	2,022	0	2,42
3308	—CAPPING OF WASTE PILE			132,670	56,368	59,831	0	248,86
3308	—OTHER			2,282	0	0	0	2,28
3308	—CAP DRAINAGE LAYER DETENTION BASIN			300	391	856	0	1,54
	DISPOSAL (OTHER THAN COMMERCIAL)			0	14,548	54,739	0	69,287
3318	—SORTING			0	14,299	5,829	0	20,129
3318	—SPREADING			0	248	690	0	938
3318	—COMPACTING			0	0	48,220	0	48,220
	SITE RESTORATION			2,858	1,801	1,933	0	6,593
3320	—REVEGETATION AND PLANTING			2,670	686	721	0	4,07
3320	—REMOVAL OF BARRIERS			94	828	274	0	1,197
3320	—REMOVAL OF DECON PAD			94	287	937	0	1,318
	DEMOBILIZATION			677	11,004	6,588	0	18,269
3321	—REMOVAL OF TEMPORARY UTILITIES			0	1,500	0	0	1,500
3321	—DEMOB CONSTRUCTION EQUIPMENT AND FACILITIES			0	281	6,588	0	6,869
3321	—DEMOBILIZATION OF PERSONNEL			0	5,500	0	0	5,500
3321	—POST-CONSTRUCTION SUBMITTALS			677	3,723	0	0	4,400
	OTHER			2,200	173,243	0	0	175,443
3390	—SUPPORT PERSONNEL			0	173,243	0	0	173,243
3390	—LIQUID WASTE DISPOSAL			2,200	0	0	0	2,200

B--SYSTEM REPORT
SUBMITTAL: PRELIMINARY DRAFT
SOFTWARE VERSION: SUCCESS 3.1
REPORT WRITER VERSION: R&R 6.0
C:\SC30\SYSTEM\NAVFAC01.RP5 REPORT REVISION 2 NOVEMBER 1997

CONSTRUCTION CONTRACT: N6247093-D3032-0
DATABASE USED: N/A
PRINTING DATE: 03/13/1998
Page No. 1
ESTIMATE NAME: FINAL DESIGN ESTIMATE

PROJECT: SITE 2 - FENCED ORDNANCE BURIAL AREA RCRA CAP
LOCATION: NSWCDL, DAHLGREN, VA
ESTIMATOR:
PROJECT SIZE: 1.00 LS
CONSTRUCTION FUNDS AVAILABLE:0 USD
CURRENCY: DOLLARS

CAT CODE:
UIC:
PROJECT #: CTO 292
DATE OF ESTIMATE: 03/13/98
BID DATE:

WBS CODE	DESCRIPTION	COST/PROJECT UOM BASED ON 1 LS	COST/ WBS UNIT	TOTAL MARKED UP COSTS MATL	LABOR	EQUIP	OTHER1	T
	SITE 2 - RCRA CAP DESIGN, PROJECT TOTALS							
	****PROJECT SUBTOTALS****			199,794	345,304	218,660	0	
	MOBILIZATION AND PREPARATORY WORK			*5,854*	*38,060*	*11,195*	*0*	
	-MOB OF CONST EQUIPMENT AND FACILITIES			0	282	6,586	0	
	-MOB OF PERSONNEL			0	5,500	0	0	
	-PRECONST SUBMITTALS/IMPLEMENTATION PLANS			0	22,500	0	0	
	-SETUP/CONSTRUCT TEMPORARY FACILITIES			5,735	3,148	4,159	0	
	-TEMPORARY UTILITES			0	5,530	450	0	
	-OTHER			119	1,101	0	0	
	MONITORING, SAMPLING, TESTING, AND ANALYSIS			*7,405*	*10,263*	*10,769*	*0*	
	-MONITORING WELL INSTALLATION			968	1,793	8,349	0	
	-LABORATORY CHEMICAL ANALYSIS			6,437	0	0	0	
	-GEOTECHNICAL INSTRUMENTATION			0	8,470	2,420	0	
	SITE WORK			*43,846*	*38,483*	*69,636*	*0*	1
	-DEMOLITION			0	752	1,053	0	
	-CLEARING AND GRUBBING			0	5,589	9,890	0	1
	-EARTHWORK			8,398	22,428	54,082	0	8
	-ROADS/PARKING/CURBS/WALKS			15,880	6,526	2,644	0	2
	-FENCING			18,605	2,524	1,109	0	2
	-CAP DRAINAGE TRANSFER PIPE			482	300	385	0	

B--SYSTEM REPORT
SUBMITTAL: PRELIMINARY DRAFT
SOFTWARE VERSION: SUCCESS 3.1
REPORT WRITER VERSION: R&R 6.0
C:\SC30\SYSTEM\NAVFAC01.RP5 REPORT REVISION 2 NOVEMBER 1997

CONSTRUCTION CONTRACT: N6247093-D3032-0158
DATABASE USED: N/A
PRINTING DATE: 03/13/1998
Page No. 2
ESTIMATE NAME: FINAL DESIGN ESTIMATE

PROJECT: SITE 2 - FENCED ORDNANCE BURIAL AREA RCRA CAP
LOCATION: NSWCDL, DAHLGREN, VA
ESTIMATOR:
PROJECT SIZE: 1.00 LS
CONSTRUCTION FUNDS AVAILABLE:0 USD
CURRENCY: DOLLARS

CAT CODE:
UIC:
PROJECT #: CTO 292
DATE OF ESTIMATE: 03/13/98
BID DATE:

WBS CODE	DESCRIPTION	COST/PROJECT UOM BASED ON 1 LS	COST/ WBS UNIT	TOTAL MARKED UP COSTS MATL	LABOR	EQUIP	OTHER1	TOTAL
	-LANDFILL DRAINAGE CHANNEL			482	363	472	0	1,3
	SURFACE WATER COLLECTION AND CONTROL			*1,700*	*743*	*1,092*	*0*	*3,5*
	-SEDIMENT BARRIERS			810	403	12	0	1,2
	-OTHER			891	340	1,080	0	2,3
	SOLIDS COLLECTION AND CONTAINMENT			*135,253*	*57,160*	*62,708*	*0*	*255,1*
	-EXCAVATION			0	400	2,022	0	2,4
	-CAPPING OF WASTE PILE			132,670	56,368	59,831	0	248,86
	-OTHER			2,282	0	0	0	2,28
	-CAP DRAINAGE LAYER DETENTION BASIN			300	391	856	0	1,54
	DISPOSAL (OTHER THAN COMMERCIAL)			*0*	*14,548*	*54,739*	*0*	*69,28*
	-SORTING			0	14,299	5,829	0	20,12
	-SPREADING			0	248	690	0	938
	-COMPACTING			0	0	48,220	0	48,220
	SITE RESTORATION			*2,858*	*1,801*	*1,933*	*0*	*6,593*
	-REVEGETATION AND PLANTING			2,670	686	721	0	4,078
	-REMOVAL OF BARRIERS			94	828	274	0	1,197
	-REMOVAL OF DECON PAD			94	287	937	0	1,318
	DEMOBILIZATION			*677*	*11,004*	*6,588*	*0*	*18,2*
	-REMOVAL OF TEMPORARY UTILITIES			0	1,500	0	0	1,500

B--SYSTEM REPORT
SUBMITTAL: PRELIMINARY DRAFT
SOFTWARE VERSION: SUCCESS 3.1
REPORT WRITER VERSION: R&R 6.0
C:\SC30\SYSTEM\NAVFAC01.RP5 REPORT REVISION 2 NOVEMBER 1997

CONSTRUCTION CONTRACT: N6247093-D3032-0
DATABASE USED: N/A
PRINTING DATE: 03/13/1998
Page No. 3
ESTIMATE NAME: FINAL DESIGN ESTIMATE

PROJECT: SITE 2 - FENCED ORDNANCE BURIAL AREA RCRA CAP
LOCATION: NSWCDL, DAHLGREN, VA
ESTIMATOR:
PROJECT SIZE: 1.00 LS
CONSTRUCTION FUNDS AVAILABLE:0 USD
CURRENCY: DOLLARS

CAT CODE:
UIC:
PROJECT #: CTO 292
DATE OF ESTIMATE: 03/13/98
BID DATE:

WBS CODE	DESCRIPTION	COST/PROJECT UOM BASED ON 1 LS	COST/ WBS UNIT	TOTAL MARKED UP COSTS MATL	LABOR	EQUIP	OTHER1
-DEMOB CONSTRUCTION EQUIPMENT AND				0	281	6,588	0
-DEMOBILIZATION OF PERSONNEL				0	5,500	0	0
-POST-CONSTRUCTION SUBMITTALS				677	3,723	0	0
OTHER				*2,200*	*173,243*	*0*	*0*
-SUPPORT PERSONNEL				0	173,243	0	0
-LIQUID WASTE DISPOSAL				2,200	0	0	0

C--ASSEMBLY CATEGORY REPORT
SUBMITTAL: PRELIMINARY DRAFT
SOFTWARE VERSION: SUCCESS 3.1
REPORT WRITER VERSION: R&R 6.0
NAVFAC01.RP5 REPORT REVISION 2 NOVEMBER 1997

CONSTRUCTION CONTRACT: N6247093-D3032-0
DATABASE USED: N/A
PRINTING DATE: 03/13/1998
Page No. 1
ESTIMATE NAME: FINAL DESIGN ESTIMATE

PROJECT: SITE 2 - FENCED ORDNANCE BURIAL AREA RCRA CAP
LOCATION: NSWCDL, DAHLGREN, VA
ESTIMATOR:
PROJECT SIZE: 1.00LS
CONSTRUCTION FUNDS AVAILABLE: 0 USD
CURRENCY: DOLLARS

CAT CODE:
UIC:
PROJECT #: CTO 292
DATE OF ESTIMATE: 03/13/98
BID DATE:

WBS CODE	DESCRIPTION	COST/PROJECT UOM BASED ON 1 LS	COST/ WBS UNIT	TOTAL MARKED UP COSTS MATL	LABOR	EQUIP	OTHER1	TC
	SITE 2 - RCRA CAP DESIGN, PROJECT TOTALS							7
	*****PROJECT SUBTOTALS****			199,794	345,304	218,660	0	
	MOBILIZATION AND PREPARATORY WORK			5,854	38,060	11,195	0	
	-MOB OF CONST EQUIPMENT AND FACILITIES			0	282	6,586	0	
	-MOB OF PERSONNEL			0	5,500	0	0	
	-PRECONST SUBMITTALS/IMPLEMENTATION PLANS			0	22,500	0	0	
	-SETUP/CONSTRUCT TEMPORARY FACILITIES			5,735	3,148	4,159	0	
	-TEMPORARY UTILITES			0	5,530	450	0	
	-OTHER			119	1,101	0	0	
	MONITORING, SAMPLING, TESTING, AND AN			7,405	10,263	10,769	0	
	-MONITORING WELL INSTALLATION			968	1,793	8,349	0	
	-LABORATORY CHEMICAL ANALYSIS			6,437	0	0	0	
	-GEOTECHNICAL INSTRUMENTATION			0	8,470	2,420	0	
	SITE WORK			43,846	38,483	69,636	0	1
	-DEMOLITION			0	752	1,053	0	
	-CLEARING AND GRUBBING			0	5,589	9,890	0	
	-EARTHWORK			8,398	22,428	54,082	0	
	-ROADS/PARKING/CURBS/WALKS			15,880	6,526	2,644	0	
	-FENCING			18,605	2,524	1,109	0	
	-CAP DRAINAGE TRANSFER PIPE			482	300	385	0	
	-LANDFILL DRAINAGE CHANNEL			482	363	472	0	
	SURFACE WATER COLLECTION AND CONTROL			1,700	743	1,092	0	
	-SEDIMENT BARRIERS			810	403	12	0	
	-OTHER			891	340	1,080	0	
	SOLIDS COLLECTION AND CONTAINMENT			135,253	57,160	62,708	0	25
	-EXCAVATION			0	400	2,022	0	
	-CAPPING OF WASTE PILE			132,670	56,368	59,831	0	24
	-OTHER			2,282	0	0	0	
	-CAP DRAINAGE LAYER DETENTION BASIN			300	391	856	0	
	DISPOSAL (OTHER THAN COMMERCIAL)			0	14,548	54,739	0	6
	-SORTING			0	14,299	5,829	0	2
	-SPREADING			0	248	690	0	
	-COMPACTING			0	0	48,220	0	4
	SITE RESTORATION			2,858	1,801	1,933	0	6
	-REVEGETATION AND PLANTING			2,670	686	721	0	

C–ASSEMBLY CATEGORY REPORT
SUBMITTAL: PRELIMINARY DRAFT
SOFTWARE VERSION: SUCCESS 3.1
REPORT WRITER VERSION: R&R 6.0
NAVFAC01.RP5 REPORT REVISION 2 NOVEMBER 1997

CONSTRUCTION CONTRACT: N6247093-D3032-0158
DATABASE USED: N/A
PRINTING DATE: 03/13/1998
Page No. 2
ESTIMATE NAME: FINAL DESIGN ESTIMATE

PROJECT: SITE 2 - FENCED ORDNANCE BURIAL AREA RCRA CAP
LOCATION: NSWCDL, DAHLGREN, VA
ESTIMATOR:
PROJECT SIZE: 1.00LS
CONSTRUCTION FUNDS AVAILABLE: 0 USD
CURRENCY: DOLLARS

CAT CODE:
UIC:
PROJECT #: CTO 292
DATE OF ESTIMATE: 03/13/98
BID DATE:

WBS CODE	DESCRIPTION	COST/PROJECT UOM BASED ON 1 LS	COST/ WBS UNIT	TOTAL MARKED UP COSTS MATL	LABOR	EQUIP	OTHER1	TOTAL
	-REMOVAL OF BARRIERS			94	828	274	0	1,197
	-REMOVAL OF DECON PAD			94	287	937	0	1,318
	DEMOBILIZATION			677	11,004	6,588	0	18,269
	-REMOVAL OF TEMPORARY UTILITIES			0	1,500	0	0	1,500
	-DEMOB CONSTRUCTION EQUIPMENT AND FACILITIES			0	281	6,588	0	6,869
	-DEMOBILIZATION OF PERSONNEL			0	5,500	0	0	5,500
	-POST-CONSTRUCTION SUBMITTALS			677	3,723	0	0	4,400
	OTHER			2,200	173,243	0	0	175,443
	-SUPPORT PERSONNEL			0	173,243	0	0	173,243
	-LIQUID WASTE DISPOSAL			2,200	0	0	0	2,200

D–MARKUP REPORT
SUBMITTAL: PRELIMINARY DRAFT
SOFTWARE VERSION: SUCCESS 3.1
REPORT WRITER VERSION: R&R 6.0
C:\SC30\SYSTEM\NAVFAC01.RP5 REPORT REVISION 2 NOVEMBER 1997

CONSTRUCTION CONTRACT: N6247093-D
DATABASE USED : N/A
PRINTING DATE : 03/13/98
PAGE NUMBER : 1
ESTIMATE NAME : FINAL DESIGN ESTIMA

PROJECT: SITE 2 - FENCED ORDNANCE BURIAL AREA RCRA
LOCATION: NSWCDL, DAHLGREN, VA
ESTIMATOR:
PROJECT SIZE: 1.00 LS
AUTHORIZED CONSTRUCTION FUNDS: 0 USD

CAT CODE:
UIC:
PROJECT #: CTO 292
DATE OF ESTIMATE: 03/13/98
BID DATE:

CONTRACTOR	DESCRIPTION	MATERIAL	LABOR	EQUIPMENT	OTH
SUB	SUBCONTRACTED WORK - MATL, FENCE, WELLS, S				
	SUBCONTRACTOR MARKUP	10.00	10.00	10.00	10.
	COMPOSITE MARKUPS FOR SUB				
	MATERIAL COMPOSITE MARKUP	1.1000			
	LABOR COMPOSITE MARKUP	1.1000			
	EQUIPMENT COMPOSITE MARKUP	1.1000			
	OTHER1 COMPOSITE MARKUP	1.1000			

E-DETAIL REPORT UNBURDENED
PRELIMINARY DRAFT
SOFTWARE VERSION: SUCCESS 3.1
REPORT WRITER VERSION: R&R 6.0
C:\SC30\SYSTEM\NAVFAC01.RP5 REPORT REVISION 2 NOVEMBER 1997

CONSTRUCTION CONTRACT: N6247093-D3032-01
ESTIMATE NAME: FINAL DESIGN ESTIMATE
DATABASE USED: N/A
PRINTING DATE: 03/13/1998

PROJECT: SITE 2 - FENCED ORDNANCE BURIAL AREA RCRA CAP
LOCATION: NSWCDL, DAHLGREN, VA
ESTIMATOR:
PROJECT SIZE: 1.00 LS
CONSTRUCTION FUNDS AVAILABLE: 0 USD
CURRENCY: DOLLARS

CAT CODE:
UIC:
PROJECT #: CTO 292
DATE OF ESTIMATE: 03/13/98
BID DATE:

WBS CODE / DBASE SOURCE	DESCRIPTION / Contractor/Crew	QTY	UM	TOTAL COSTS MATERIAL	LABOR	EQUIPMENT	TOTAL
33	**SITE 2 - RCRA CAP DESIGN**						
3301	**MOBILIZATION AND PREPARATORY WORK**						
330101	MOB OF CONST EQUIPMENT AND FACILITIES						
	Backhoe, 3/4 cy			0.00	47.50	220.00	267
CES/USR	---/---	1.00	ls	0	48	220	2
	Excavator, 1-1/2 cy			0.00	57.00	264.00	321.
CES/USR	---/---	1.00	ls	0	57	264	3
	Dozer, 300 HP			0.00	45.00	208.00	253.
CES/USR	---/---	1.00	ls	0	45	208	2
	Shredder			0.00	0.00	4980.24	4,980.
CES/USR	---/---	1.00	ls	0	0	4,980	4,9
	Office Trailer			0.00	0.00	150.00	150.
CES/USR	---/---	1.00	ls	0	0	150	1
	Storage Trailer			0.00	0.00	150.00	150.
CES/USR	---/---	1.00	ls	0	0	150	1
	Front End Loader (Tracks), 2-1/4 cy			0.00	42.50	198.00	240.
CES/USR	---/---	1.00	ls	0	43	198	24
	Vibratory Roller			0.00	45.00	208.00	253.
CES/USR	---/---	1.00	ls	0	45	208	25
	Sheepsfoot Roller			0.00	45.00	208.00	253.
CES/USR	---/---	1.00	ls	0	45	208	25
	Subtotal Direct Costs			0	282	6,586	6,86
	TOTAL 330101 MOB OF CONST EQUIPMENT AND FACILITIES			0	282	6,586	6,86
330102	MOB OF PERSONNEL						
	Site Supervisor			0.00	500.00	0.00	500.0
CES/USR	---/---	1.00	ea	0	500	0	50
	Job Foreman			0.00	500.00	0.00	500.0
CES/USR	---/---	1.00	ea	0	500	0	50
	Health and Safety Officer			0.00	500.00	0.00	500.0
CES/USR	---/---	1.00	ea	0	500	0	50
	Project Geologist			0.00	500.00	0.00	500.0
CES/USR	---/---	1.00	ea	0	500	0	50
	Site Engineer			0.00	500.00	0.00	500.0
CES/USR	---/---	1.00	ea	0	500	0	50
	Site Administrative Support			0.00	500.00	0.00	500.0
CES/USR	---/---	1.00	ea	0	500	0	50
	Accountant			0.00	500.00	0.00	500.0
CES/USR	---/---	1.00	ea	0	500	0	50
	Project Engineer			0.00	500.00	0.00	500.0
CES/USR	---/---	2.00	ea	0	1,000	0	1,00
	Project Manager			0.00	500.00	0.00	500.0
CES/USR	---/---	2.00	ea	0	1,000	0	1,00
	Subtotal Direct Costs			0	5,500	0	5,50
	TOTAL 330102 MOB OF PERSONNEL			0	5,500	0	5,500
330103	PRECONST SUBMITTALS/IMPLEMENTATION PLANS						
	Preconstruction Submittals			0.00	30.00	0.00	30.00
CES/USR	---/---	750.00	hr	0	22,500	0	22,500
	Subtotal Direct Costs			0	22,500	0	22,500
	TOTAL 330103 PRECONST SUBMITTALS/IMPLEMENTATION PLANS			0	22,500	0	22,500
330104	SETUP/CONSTRUCT TEMPORARY FACILITIES						
	Temporary Fence Construction			4.56	2.51	0.00	7.07
CES/USR	SUB/---	320.00	lf	1,458	803	0	2,261
	Temporary Gate Construction			647.90	570.00	370.00	1,587.90
CES/USR	SUB/---	1.00	ea	648	570	370	1,588

WBS CODE / DBASE SOURCE	DESCRIPTION / Contractor/Crew	QTY	UM	TOTAL COSTS MATERIAL	LABOR	EQUIPMENT	TOTAL
330104 SETUP/CONSTRUCT TEMPORARY FACILITIES							
	Office Trailer - 1			0.00	0.00	181.00	181.00
CES/USR	---/---	5.00	mo	0	0	905	905
	Storage Trailer - 1			0.00	0.00	95.00	95.00
CES/USR	---/---	5.00	mo	0	0	475	475
	Decon Pad - Sand, 4"			25.08	0.00	0.00	25.08
CES/USR	SUB/---	12.40	cy	311	0	0	311
	Decon Pad - VDOT #1, 6"			15.68	0.00	0.00	15.68
CES/USR	SUB/---	18.50	cy	290	0	0	290
	Decon Pad - Railroad Ties			27.69	11.45	2.40	41.54
CES/USR	---/---	20.00	ea	554	229	48	831
	Decon Pad - Sump Pump			0.00	22.40	300.00	322.40
CES/USR	---/---	5.00	mo	0	112	1,500	1,612
	Decon Pad - 100 mil HDPE			0.89	0.92	0.16	1.97
CES/USR	---/---	1,100.00	sf	977	1,012	176	2,165
	Decon Pad - 150 mil Geotextile			2.76	0.42	0.03	3.21
CES/USR	---/---	123.00	sy	339	52	4	395
	Decon Pad - 8" Perforated PVC Pipe			2.54	1.65	0.00	4.29
CES/USR	---/---	25.00	ft	66	41	0	107
	Temporary Storage Tank			0.00	8.00	120.00	128.00
CES/USR	---/---	5.00	mo	0	40	600	640
	Decon Pad - Sump Construction			10.87	13.25	5.40	29.52
CES/USR	---/---	3.00	vf	33	40	16	89
	Rock Construction Entrance - Grade Entrance			0.00	0.18	0.67	0.85
CES/USR	---/---	8.70	cy	0	2	6	7
	Rock Construction Entrance - Install 60 mil Geotextile			1.08	0.25	0.02	1.35
CES/USR	---/---	104.40	sy	112	26	2	141
	Rock Const. Entrance - Import Stone			15.68	0.00	0.00	15.67
CES/USR	SUB/---	17.50	cy	274	0	0	274
	Rock Const. Entrance - Install Stone			0.00	1.68	0.35	2.03
CES/USR	---/---	17.50	cy	0	29	6	36
	Rock Const. Entrance - Maintenance			374.74	54.30	13.83	442.87
CES/USR	---/---	1.00	ls	375	54	14	443
	Subtotal Direct Costs			5,437	3,010	4,122	12,569
	Subcontractor Markups			298	137	37	472
	TOTAL 330104 SETUP/CONSTRUCT TEMPORARY FACILITIES			5,735	3,148	4,159	13,042
330105 TEMPORARY UTILITES							
	Connect Phone and Electric			0.00	5000.00	0.00	5,000.00
CES/USR	SUB/---	1.00	ls	0	5,000	0	5,000
	Portable Toilets			0.00	6.00	90.00	96.00
CES/USR	---/---	5.00	mo	0	30	450	480
	Subtotal Direct Costs			0	5,030	450	5,480
	Subcontractor Markups			0	500	0	500
	TOTAL 330105 TEMPORARY UTILITES			0	5,530	450	5,980
330190 OTHER							
	Survey - Construction Layout			47.03	435.00	0.00	482.03
CES/USR	SUB/---	2.30	ac	108	1,001	0	1,109
	Subtotal Direct Costs			108	1,001	0	1,109
	Subcontractor Markups			11	100	0	111
	TOTAL 330190 OTHER			119	1,101	0	1,220
	SUBTOTAL 3301 MOBILIZATION AND PREPARATORY WORK			5,545	37,323	11,158	54,026
	MARKUP			*1.056*	*1.020*	*1.003*	*1.020*
	TOTAL 3301 MOBILIZATION AND PREPARATORY WORK			5,854	38,060	11,195	55,109
3302	MONITORING, SAMPLING, TESTING, AND ANALYSI						
330204 MONITORING WELL INSTALLATION							
	Well Drilling - Hollow Stem Auger			0.00	7.52	15.95	23.47
CES/USR	SUB/---	99.00	vf	0	744	1,579	2,324
	2" PVC Well Casing			1.11	1.38	2.92	5.41
CES/USR	SUB/---	80.00	vf	89	110	234	433
	PVC Well Screen			5.67	1.78	3.78	11.23
CES/USR	SUB/---	40.00	vf	227	71	151	449

WBS CODE / DBASE SOURCE	DESCRIPTION / Contractor/Crew	QTY	UM	TOTAL COSTS MATERIAL	LABOR	EQUIPMENT	TOTA
330204 MONITORING WELL INSTALLATION							
	Plug			9.10	2.07	4.39	1
CES/USR	SUB/---	4.00	ea	36	8	18	
	Bentonite Seal			18.86	4.65	9.87	3
CES/USR	SUB/---	8.00	vf	151	37	79	
	Locking Cap			19.79	12.91	27.41	6
CES/USR	SUB/---	4.00	ea	79	52	110	
	Well Development			0.00	25.00	10.00	35
CES/USR	SUB/---	4.00	hr	0	100	40	
	Well Development Wastewater Handling			0.00	0.00	40.00	40
CES/USR	SUB/---	4.00	ea	0	0	160	
	Monitoring Well Manhole - 8" Diameter			56.90	25.82	54.81	137
CES/USR	SUB/---	4.00	ea	228	103	219	
	Flush Mount Concrete			70.26	15.10	1.01	86.
CES/USR	SUB/---	1.00	cy	70	15	1	
	All Terrain Rig Mob/Demob			0.00	0.00	5000.00	5,000.
CES/USR	SUB/---	1.00	ls	0	0	5,000	5,0
	Survey Well Locations			0.00	388.40	0.00	388.
CES/USR	SUB/---	1.00	day	0	388	0	3
	Subtotal Direct Costs			880	1,630	7,590	10,1
	Subcontractor Markups			88	163	759	1,0
	TOTAL 330204 MONITORING WELL INSTALLATION			968	1,793	8,349	11,1
330209 LABORATORY CHEMICAL ANALYSIS							
	Decon/Well Development/Groundwater			1463.00	0.00	0.00	1,463.0
CES/USR	SUB/---	4.00	ea	5,852	0	0	5,85
	Subtotal Direct Costs			5,852	0	0	5,85
	Subcontractor Markups			585	0	0	58
	TOTAL 330209 LABORATORY CHEMICAL ANALYSIS			6,437	0	0	6,43
330212 GEOTECHNICAL INSTRUMENTATION							
	Technician w/ Nuclear Densometer			0.00	175.00	50.00	225.0
CES/USR	SUB/---	44.00	day	0	7,700	2,200	9,90
	Subtotal Direct Costs			0	7,700	2,200	9,90
	Subcontractor Markups			0	770	220	99
	TOTAL 330212 GEOTECHNICAL INSTRUMENTATION			0	8,470	2,420	10,89
	SUBTOTAL 3302 MONITORING, SAMPLING, TESTING, AND ANALYSIS			6,732	9,330	9,790	25,85
	MARKUP			*1.100*	*1.100*	*1.100*	*1.10*
	TOTAL 3302 MONITORING, SAMPLING, TESTING, AND ANALYSIS			7,405	10,263	10,769	28,43
3303 SITE WORK							
330301 DEMOLITION							
	Remove Existing Fence			0.00	1.19	0.49	1.6
CES/USR	---/---	445.00	lf	0	530	218	74
	Remove Existing Culvert			0.00	222.80	835.00	1,057.8
CES/USR	---/---	1.00	ls	0	223	835	1,05
	Subtotal Direct Costs			0	752	1,053	1,80
	TOTAL 330301 DEMOLITION			0	752	1,053	1,80
330302 CLEARING AND GRUBBING							
	Clearing and Grubbing			0.00	2430.00	4300.00	6,730.0
CES/USR	---/---	2.30	ac	0	5,589	9,890	15,47
	Subtotal Direct Costs			0	5,589	9,890	15,47
	TOTAL 330302 CLEARING AND GRUBBING			0	5,589	9,890	15,47
330303 EARTHWORK							
	Excavate/Load Clean Material to 4' deep			0.00	0.37	1.92	2.29
CES/USR	---/---	1,300.00	cy	0	481	2,496	2,977
	Haul Clean Material to Stockpile Area			0.00	0.21	1.26	1.47
CES/USR	---/---	1,300.00	cy	0	273	1,638	1,911
	Excavate/Load Nonhaz Material			0.00	0.38	1.67	2.05

WBS CODE / DBASE SOURCE	DESCRIPTION / Contractor/Crew	QTY	UM	TOTAL COSTS MATERIAL	LABOR	EQUIPMENT	TOTAL
330303 EARTHWORK							
CES/USR	---/---	3,920.00	cy	0	1,490	6,546	8,036
	Haul Nonhaz Material to Landfill			0.00	0.21	1.26	1.47
CES/USR	---/---	3,920.00	cy	0	823	4,939	5,762
	Spread Nonhaz Material over Landfill			0.00	1.75	1.56	3.31
CES/USR	---/---	3,920.00	cy	0	6,860	6,115	12,975
	Excavate/Load Stockpiled Material			0.00	0.33	0.91	1.24
CES/USR	---/---	1,300.00	cy	0	429	1,183	1,612
	Backfill Excav with Stockpiled Material			0.00	0.49	1.85	2.34
CES/USR	---/---	1,300.00	cy	0	637	2,405	3,042
	Import Common Fill			4.23	5.49	13.72	23.44
CES/USR	SUB/---	1,804.00	cy	7,635	9,904	24,751	42,290
	Backfill Excav w/ Common Fill and Place/Grade/Compact			0.00	0.30	0.85	1.15
CES/USR	---/---	1,804.00	cy	0	541	1,533	2,075
	Subtotal Direct Costs			7,635	21,438	51,607	80,680
	Subcontractor Markups			764	990	2,475	4,229
	TOTAL 330303 EARTHWORK			8,398	22,428	54,082	84,909
330304 ROADS/PARKING/CURBS/WALKS							
	Import Stone - VDOT #25			62.39	0.00	0.00	62.39
CES/USR	SUB/---	216.00	cy	13,475	0	0	13,475
	Grade Road Surface			0.00	222.80	1325.00	1,547.80
CES/USR	---/---	1.00	day	0	223	1,325	1,548
	Install Nonwoven Geotextile - 16 oz.			1.36	0.05	0.03	1.44
CES/USR	---/---	778.00	sy	1,057	39	23	1,119
	Place/Compact Stone			0.00	29.00	6.00	35.00
CES/USR	---/---	216.00	cy	0	6,264	1,296	7,560
	Subtotal Direct Costs			14,532	6,526	2,644	23,702
	Subcontractor Markups			1,348	0	0	1,348
	TOTAL 330304 ROADS/PARKING/CURBS/WALKS			15,880	6,526	2,644	25,050
330305 FENCING							
	Permanent Fence			16.20	0.91	0.02	17.13
CES/USR	SUB/---	960.00	lf	15,550	874	19	16,442
	Auger Fence Pole Hole			0.00	7.25	5.40	12.65
CES/USR	SUB/---	96.00	ea	0	696	518	1,214
	Post, Galvanized, Set In Concrete			71.58	15.50	10.05	97.13
CES/USR	SUB/---	10.00	ea	716	155	101	971
	Permanent Gate			647.90	570.00	370.00	1,587.90
CES/USR	SUB/---	1.00	ea	648	570	370	1,588
	Subtotal Direct Costs			16,913	2,295	1,008	20,216
	Subcontractor Markups			1,691	229	101	2,022
	TOTAL 330305 FENCING			18,605	2,524	1,109	22,238
330390 CAP DRAINAGE TRANSFER PIPE							
	Excavate Trench for Transfer Pipe			0.00	1.54	1.61	3.15
CES/USR	---/---	37.00	cy	0	57	60	117
	4" HDPE Pipe			1.23	1.33	0.19	2.75
CES/USR	---/---	165.00	lf	203	219	31	454
	Import Angular Crushed Stone			22.99	0.00	0.00	22.99
CES/USR	SUB/---	11.00	cy	253	0	0	253
	Place Angular Crushed Stone			0.00	0.28	0.28	0.56
CES/USR	---/---	11.00	cy	0	3	3	6
	Backfill Trench			0.00	0.78	0.82	1.60
CES/USR	---/---	26.00	cy	0	20	21	42
	Trench Box			0.00	0.00	270.00	270.00
CES/USR	---/---	1.00	wk	0	0	270	270
	Subtotal Direct Costs			456	300	385	1,141
	Subcontractor Markups			25	0	0	25
	TOTAL 330390 CAP DRAINAGE TRANSFER PIPE			482	300	385	1,167
330311 LANDFILL DRAINAGE CHANNEL							
	Excavate/Load Clean Material to 4' deep			0.00	0.37	1.92	2.29
CES/USR	---/---	130.00	cy	0	48	250	298
	Haul Clean Material to Trench Area for Use as Backfill			0.00	0.21	1.26	1.47

WBS CODE / DBASE SOURCE	DESCRIPTION / Contractor/Crew	QTY	UM	TOTAL COSTS MATERIAL	LABOR	EQUIPMENT	TOTA
330311 LANDFILL DRAINAGE CHANNEL							
CES/USR	---/---	130.00	cy	0	27	164	
	Place 15" RCP Storm Pipe			10.03	6.00	1.22	1
CES/USR	---/---	48.00	lf	482	288	59	
	Subtotal Direct Costs			482	363	472	1.
	TOTAL 330311 LANDFILL DRAINAGE CHANNEL			482	363	472	1.
	SUBTOTAL 3303 SITE WORK			40,019	37,263	67,060	144.
	MARKUP			*1.096*	*1.033*	*1.038*	*1.*
	TOTAL 3303 SITE WORK			43,846	38,483	69,636	151.
3305	**SURFACE WATER COLLECTION AND CONTROL**						
330507 SEDIMENT BARRIERS							
	Install Silt Fence			0.45	0.20	0.00	0.
CES/USR	---/---	1,725.00	lf	775	345	0	1,1
	Rock Check Dams - Import Stone			15.68	0.00	0.00	15.
CES/USR	SUB/---	2.00	cy	31	0	0	
	Rock Check Dams - Place Stone			0.00	29.00	6.00	35.
CES/USR	---/---	2.00	cy	0	58	12	
	Subtotal Direct Costs			806	403	12	1,2
	Subcontractor Markups			3	0	0	
	TOTAL 330507 SEDIMENT BARRIERS			810	403	12	1,2
330590 OTHER							
	Dewater Excav - Portable Sediment Tank			890.86	250.00	0.00	1,140.8
CES/USR	---/---	1.00	ls	891	250	0	1,14
	Dewater Excav - Pump/Discharge Hose			0.00	37.20	420.00	457.2
CES/USR	---/---	2.00	mo	0	74	840	91
	Dewater Excav - Temporary Storage Tank			0.00	8.00	120.00	128.0
CES/USR	---/---	2.00	mo	0	16	240	25
	Subtotal Direct Costs			891	340	1,080	2,31
	TOTAL 330590 OTHER			891	340	1,080	2,31
	SUBTOTAL 3305 SURFACE WATER COLLECTION AND CONTROL			1,697	743	1,092	3,53
	MARKUP			*1.002*	*1.000*	*1.000*	*1.00*
	TOTAL 3305 SURFACE WATER COLLECTION AND CONTROL			1,700	743	1,092	3,53
3308	**SOLIDS COLLECTION AND CONTAINMENT**						
330801 EXCAVATION							
	Excavate Hazardous Material			0.00	0.58	2.93	3.5
CES/USR	---/---	690.00	cy	0	400	2,022	2,42
	Subtotal Direct Costs			0	400	2,022	2,42
	TOTAL 330801 EXCAVATION			0	400	2,022	2,42
330805 CAPPING OF WASTE PILE							
	Import Select Fill			4.23	5.49	13.72	23.44
CES/USR	SUB/---	1,157.00	cy	4,897	6,352	15,874	27,12
	Place/Grade/Compact Select Fill (12")			0.00	0.53	1.27	1.80
CES/USR	---/---	1,157.00	cy	0	613	1,469	2,083
	Install GCL			0.85	0.05	0.05	0.95
CES/USR	---/---	33,947.00	sf	28,734	1,697	1,697	32,129
	Install LDPE Geomembrane - 60 mil			0.47	0.76	0.12	1.35
CES/USR	---/---	33,947.00	sf	15,964	25,800	4,074	45,837
	Install Nonwoven Geotextile - 16 oz.			1.36	0.05	0.03	1.44
CES/USR	---/---	3,772.00	sy	5,124	189	113	5,426
	Import VDOT#8 for Drainage Layer			22.99	0.00	0.00	22.99
CES/USR	SUB/---	1,258.00	cy	28,921	0	0	28,921
	Install Drainage Layer (12")			0.00	4.69	0.65	5.34
CES/USR	---/---	1,258.00	cy	0	5,900	818	6,718
	Drainage Layer Outlet Trench - Import VDOT#8 Stone			22.99	0.00	0.00	22.99
CES/USR	SUB/---	214.00	cy	4,920	0	0	4,920
	4" Perf Corrugated Polyethylene Pipe			0.63	0.27	0.00	0.90
CES/USR	---/---	770.00	lf	483	208	0	691
	4" Corrugated Polyethylene "T"			4.28	6.00	0.00	10.27

WBS CODE / DBASE SOURCE	DESCRIPTION / Contractor/Crew	QTY	UM	TOTAL COSTS MATERIAL	LABOR	EQUIPMENT	TOTAL
330805 CAPPING OF WASTE PILE							
CES/USR	---/---	2.00	ea	9	12	0	21
	Cleanouts - 4" HDPE Wye			45.82	19.42	2.82	68.06
CES/USR	---/---	11.00	ea	504	214	31	749
	Cleanouts - 4"HDPE 45 Elbow			81.97	18.03	2.62	102.62
CES/USR	---/---	22.00	ea	1,803	397	58	2,258
	Cleanouts - 4" HDPE Pipe			1.23	1.33	0.19	2.75
CES/USR	---/---	50.00	lf	62	67	10	138
	Cleanouts - Cleanout Box			12.36	30.30	0.00	42.66
CES/USR	---/---	11.00	ea	136	333	0	469
	Install Nonwoven Geotextile - 16 oz.			1.36	0.05	0.03	1.44
CES/USR	---/---	4,074.00	sy	5,535	204	122	5,860
	Import Common Fill			4.23	5.49	13.72	23.44
CES/USR	SUB/---	2,037.00	cy	8,621	11,183	27,948	47,752
	Place/Grade/Compact Common Fill (18")			0.00	0.53	1.27	1.80
CES/USR	---/---	2,037.00	cy	0	1,080	2,587	3,667
	Import Topsoil			26.13	0.00	0.00	26.13
CES/USR	SUB/---	755.00	cy	19,724	0	0	19,724
	Place/Grade Topsoil (6")			0.00	0.30	0.85	1.15
CES/USR	---/---	755.00	cy	0	227	642	868
	Gas Vent - 6" HDPE Pipe			13.01	5.00	0.00	18.01
CES/USR	---/---	19.00	vf	247	95	0	342
	Gas Vent - 6" HDPE Elbow (90 deg)			113.84	22.95	3.33	140.12
CES/USR	---/---	2.00	ea	228	46	7	280
	Stone Drainage Material			22.99	0.00	0.00	22.99
CES/USR	SUB/---	2.00	cy	46	0	0	46
	Subtotal Direct Costs			125,958	54,615	55,449	236,021
	Subcontractor Markups			6,713	1,754	4,382	12,849
	TOTAL 330805 CAPPING OF WASTE PILE			132,670	56,368	59,831	248,869
330890 OTHER							
	PPE - Level D			7.32	0.00	0.00	7.32
CES/USR	---/---	312.00	mn d	2,282	0	0	2,282
	Subtotal Direct Costs			2,282	0	0	2,282
	TOTAL 330890 OTHER			2,282	0	0	2,282
330891 CAP DRAINAGE LAYER DETENTION BASIN							
	Excavate Basin			0.00	0.37	1.92	2.29
CES/USR	---/---	256.00	cy	0	95	492	586
	Haul Surplus Clean Material to Trench Area for use as fill			0.00	0.21	1.26	1.47
CES/USR	---/---	50.00	cy	0	11	63	74
	Place/Grade/Compact to Build Basin			0.00	0.30	0.85	1.15
CES/USR	---/---	206.00	cy	0	62	175	237
	Install Nonwoven Geotextile - 16 oz.			1.36	0.05	0.03	1.44
CES/USR	---/---	30.00	sy	41	2	1	43
	Import VDOT#3, 357, or 5			18.03	0.00	0.00	18.03
CES/USR	SUB/---	1.50	cy	27	0	0	27
	Import Class I Rip Rap			26.13	0.00	0.00	26.13
CES/USR	SUB/---	8.00	cy	209	0	0	209
	Place Class I Rip Rap and VDOT Stone			0.00	222.80	125.00	347.80
CES/USR	---/---	1.00	day	0	223	125	348
	Subtotal Direct Costs			277	391	856	1,524
	Subcontractor Markups			24	0	0	24
	TOTAL 330891 CAP DRAINAGE LAYER DETENTION BASIN			300	391	856	1,547
	SUBTOTAL 3308 SOLIDS COLLECTION AND CONTAINMENT			128,517	55,406	58,326	242,249
	MARKUP			*1.052*	*1.032*	*1.075*	*1.053*
	TOTAL 3308 SOLIDS COLLECTION AND CONTAINMENT			135,253	57,160	62,708	255,121
3318 DISPOSAL (OTHER THAN COMMERCIAL)							
331804 SORTING							
	Segregate Hazardous Items During Shredding			0.00	529.60	215.90	745.50
CES/USR	---/---	27.00	day	0	14,299	5,829	20,129
	Subtotal Direct Costs			0	14,299	5,829	20,129
	TOTAL 331804 SORTING			0	14,299	5,829	20,129

WBS CODE / DBASE SOURCE	DESCRIPTION / Contractor/Crew	QTY	UM	TOTAL COSTS MATERIAL	LABOR	EQUIPMENT	TOTA
331805 SPREADING							
	Waste Grading			0.00	0.36	1.00	
CES/USR	---/---	690.00	cy	0	248	690	
	Subtotal Direct Costs			0	248	690	
	TOTAL 331805 SPREADING			0	248	690	
331806 COMPACTING							
	Waste Shredding			0.00	0.00	48219.97	48,21
CES/USR	---/---	1.00	mo	0	0	48,220	48,
	Subtotal Direct Costs			0	0	48,220	48,
	TOTAL 331806 COMPACTING			0	0	48,220	48,
	SUBTOTAL 3318 DISPOSAL (OTHER THAN COMMERCIAL)			0	14,548	54,739	69,
	MARKUP				*1.000*	*1.000*	*1.*
	TOTAL 3318 DISPOSAL (OTHER THAN COMMERCIAL)			0	14,548	54,739	69,
3320	**SITE RESTORATION**						
332004 REVEGETATION AND PLANTING							
	Revegetation (including cap area)			26.65	6.85	7.20	40.
CES/USR	---/---	100.20	msf	2,670	686	721	4,0
	Subtotal Direct Costs			2,670	686	721	4,0
	TOTAL 332004 REVEGETATION AND PLANTING			2,670	686	721	4,0
332005 REMOVAL OF BARRIERS							
	Remove Temporary Fence			0.00	1.19	0.49	1,
CES/USR	SUB/---	320.00	lf	0	381	157	5
	Remove Silt Fence			0.00	0.20	0.00	0,
CES/USR	---/---	1,725.00	lf	0	345	0	3
	Disposal			6.27	4.28	6.80	17,
CES/USR	---/---	15.00	cy	94	64	102	2
	Subtotal Direct Costs			94	790	259	1,1
	Subcontractor Markups			0	38	16	
	TOTAL 332005 REMOVAL OF BARRIERS			94	828	274	1,1
332091 REMOVAL OF DECON PAD							
	Excavate/Load Decon Pad			0.00	222.80	835.00	1,057.8
CES/USR	---/---	1.00	ls	0	223	835	1,05
	Disposal as C&D Debris			6.27	4.28	6.80	17.3
CES/USR	---/---	15.00	cy	94	64	102	26
	Subtotal Direct Costs			94	287	937	1,31
	TOTAL 332091 REMOVAL OF DECON PAD			94	287	937	1,31
	SUBTOTAL 3320 SITE RESTORATION			2,858	1,763	1,917	6,53
	MARKUP			*1.000*	*1.022*	*1.008*	*1.00*
	TOTAL 3320 SITE RESTORATION			2,858	1,801	1,933	6,59
3321	**DEMOBILIZATION**						
332102 REMOVAL OF TEMPORARY UTILITIES							
	Disconnect Temporary Utilities			0.00	1500.00	0.00	1,500.00
CES/USR	---/---	1.00	ls	0	1,500	0	1,500
	Subtotal Direct Costs			0	1,500	0	1,500
	TOTAL 332102 REMOVAL OF TEMPORARY UTILITIES			0	1,500	0	1,500
332104 DEMOB CONSTRUCTION EQUIPMENT AND FACILITIES							
	Dozer, 300 HP			0.00	44.84	208.45	253.29
CES/USR	---/---	1.00	ea	0	45	208	253
	Front End Loader			0.00	42.60	198.05	240.65
CES/USR	---/---	1.00	ea	0	43	198	24
	Backhoe, 3/4 cy			0.00	47.33	220.03	267.36
CES/USR	---/---	1.00	ea	0	47	220	267
	Sheepsfoot Roller			0.00	44.84	208.45	253.29

WBS CODE / DBASE SOURCE	DESCRIPTION / Contractor/Crew	QTY	UM	TOTAL COSTS MATERIAL	LABOR	EQUIPMENT	TOTAL
332104 DEMOB CONSTRUCTION EQUIPMENT AND FACILITIES							
CES/USR	---/---	1.00	ea	0	45	208	253
	Vibratory Riding Roller			0.00	44.84	208.45	253.29
CES/USR	---/---	1.00	ea	0	45	208	253
	Excavator, 1-1/2 cy			0.00	56.81	264.10	320.91
CES/USR	---/---	1.00	ea	0	57	264	321
	Shredder			0.00	0.00	4980.24	4,980.24
CES/USR	---/---	1.00	ea	0	0	4,980	4,980
	Office Trailer			0.00	0.00	150.00	150.00
CES/USR	---/---	1.00	ea	0	0	150	150
	Storage Trailer			0.00	0.00	150.00	150.00
CES/USR	---/---	1.00	ls	0	0	150	150
	Subtotal Direct Costs			0	281	6,588	6,869
	TOTAL 332104 DEMOB CONSTRUCTION EQUIPMENT AND FACILITIES			0	281	6,588	6,869
332105 DEMOBILIZATION OF PERSONNEL							
	Site Supervisor			0.00	500.00	0.00	500.00
CES/USR	---/---	1.00	ea	0	500	0	500
	Job Foreman			0.00	500.00	0.00	500.00
CES/USR	---/---	1.00	ea	0	500	0	500
	Health & Safety Officer			0.00	500.00	0.00	500.00
CES/USR	---/---	1.00	ea	0	500	0	500
	Project Geologist			0.00	500.00	0.00	500.00
CES/USR	---/---	1.00	ea	0	500	0	500
	Site Engineer			0.00	500.00	0.00	500.00
CES/USR	---/---	1.00	ea	0	500	0	500
	Site Administrative Support			0.00	500.00	0.00	500.00
CES/USR	---/---	1.00	ea	0	500	0	500
	Accountant			0.00	500.00	0.00	500.00
CES/USR	---/---	1.00	ea	0	500	0	500
	Project Engineer			0.00	500.00	0.00	500.00
CES/USR	---/---	2.00	ea	0	1,000	0	1,000
	Project Manager			0.00	500.00	0.00	500.00
CES/USR	---/---	2.00	ea	0	1,000	0	1,000
	Subtotal Direct Costs			0	5,500	0	5,500
	TOTAL 332105 DEMOBILIZATION OF PERSONNEL			0	5,500	0	5,500
332106 POST-CONSTRUCTION SUBMITTALS							
	Close-Out Report			0.00	30.00	0.00	30.00
CES/USR	---/---	25.00	hr	0	750	0	750
	Site Survey			50.16	1175.00	0.00	1,225.16
CES/USR	SUB/---	2.30	ac	115	2,703	0	2,818
	As-Built Records			500.00	0.00	0.00	500.00
CES/USR	SUB/---	1.00	ls	500	0	0	500
	Subtotal Direct Costs			615	3,453	0	4,068
	Subcontractor Markups			62	270	0	332
	TOTAL 332106 POST-CONSTRUCTION SUBMITTALS			677	3,723	0	4,400
	SUBTOTAL 3321 DEMOBILIZATION			615	10,734	6,588	17,937
	MARKUP			*1.100*	*1.025*	*1.000*	*1.018*
	TOTAL 3321 DEMOBILIZATION			677	11,004	6,588	18,269
3390	OTHER						
339001 SUPPORT PERSONNEL							
	Site Supervisor			0.00	1369.57	0.00	1,369.57
CES/USR	---/---	20.00	wk	0	27,391	0	27,391
	Job Foreman			0.00	1307.32	0.00	1,307.32
CES/USR	---/---	20.00	wk	0	26,146	0	26,146
	Health and Safety Officer			0.00	1245.06	0.00	1,245.06
CES/USR	---/---	20.00	wk	0	24,901	0	24,901
	Site Engineer			0.00	1245.06	0.00	1,245.06
CES/USR	---/---	20.00	wk	0	24,901	0	24,901
	Project Geologist			0.00	1245.06	0.00	1,245.06
CES/USR	---/---	5.00	wk	0	6,225	0	6,225
	Administrative Support			0.00	373.52	0.00	373.52
CES/USR	---/---	20.00	wk	0	7,470	0	7,470

WBS CODE / DBASE SOURCE	DESCRIPTION / Contractor/Crew	QTY	UM	TOTAL COSTS MATERIAL	LABOR	EQUIPMENT	TOTA
339001 SUPPORT PERSONNEL							
	Project Engineer (Office)			0.00	1556.33	0.00	1,55
CES/USR	***/***	10.00	wk	0	15,563	0	15,
	Project Manager (Office)			0.00	1556.33	0.00	1,55
CES/USR	***/***	10.00	wk	0	15,563	0	15,
	Accountant			0.00	750.00	0.00	75
CES/USR	***/***	20.00	wk	0	15,000	0	15,
	Per Diem			0.00	80.00	0.00	8
CES/USR	***/***	126.00	mndy	0	10,080	0	10,
	Subtotal Direct Costs			0	173,243	0	173,
	TOTAL 339001 SUPPORT PERSONNEL			0	173,243	0	173,
339002 LIQUID WASTE DISPOSAL							
	Disposal of Decon/Well Purge/Groundwater			2.00	0.00	0.00	2
CES/USR	SUB/***	1,000.00	gal	2,000	0	0	2,
	Subtotal Direct Costs			2,000	0	0	2,
	Subcontractor Markups			200	0	0	2
	TOTAL 339002 LIQUID WASTE DISPOSAL			2,200	0	0	2,
	SUBTOTAL 3390 OTHER			2,000	173,243	0	175,
	MARKUP			*1.100*	*1.000*		*1.*
	TOTAL 3390 OTHER			2,200	173,243	0	175,
	SUBTOTAL 00 SITE 2 - RCRA CAP DESIGN			187,983	340,352	210,670	739,0
	MARKUP			*1.063*	*1.015*	*1.038*	*1.0*
	TOTAL 00 SITE 2 - RCRA CAP DESIGN			**199,794**	**345,304**	**218,660**	**763,7**

COSTING FOR MONITORING AT MCALLISTER

$485	Bulk Sediment Collection Onshore
$485	Bulk Sediment Collection Off Shore
$1,043	Biota Collection On Shore
$1,043	Biota Collection Off Shore
$1,537	Sediment Chemistry Analysis
$1,367	Biota Chemistry Analysis
$250	Porewater Chemistry Analysis
$863	Toxicity Amphipod Tests
$662	Toxicity Arabacia Tests
$66	Data Validation

U. Cost	UNIT	Option 1 Near shore		OPtion 1 Off SHore		Option 2 Near shore		OPtion 2 Off shore		OPtion 3 Near Shore		OPtion 3 Off shore	
		# units	Cost	# units	Cost	# units	Cost	# units	Cost	# units	Cost	# units	Cost
$485	Bulk Sediment Collection Onshore	8	$3,880	0	$0	8	$3,880	0	$0	8	$3,880	0	$0
$485	Bulk Sediment Collection Off Shore	0	$0	17	$8,245	0	$0	16	$7,760	0	$0	15	$7,275
$1,043	Biota Collection On Shore	8	$8,344	0	$0	8	$8,344	0	$0	8	$8,344	0	$0
$1,043	Biota Collection Off Shore	0	$0	17	$17,731	0	$0	16	$16,688	0	$0	15	$15,645
$1,537	Sediment Chemistry Analysis	11	$16,907	20	$30,740	11	$16,907	20	$30,740	11	$16,907	18	$27,666
$1,367	Biota Chemistry Analysis	8	$10,936	17	$23,239	8	$10,936	16	$21,872	8	$10,936	15	$20,505
$250	Porewater Chemistry Analysis	11	$2,750	0	$0	11	$2,750	0	$0	11	$2,750	0	$0
$863	Toxicity Amphipod Tests	8	$6,904	17	$14,671	8	$6,904	16	$13,808	8	$6,904	15	$12,945
$662	Toxicity Arabacia Tests	8	$5,296	17	$11,254	8	$5,296	16	$10,592	8	$5,296	15	$9,930
$66	Data Validation/sample-data set	88	$5,808	119	$7,854	88	$5,808	140	$9,240	88	$5,808	105	$6,930
$90	Engineers Inspection/ hr	0	$0	0	$0	40	$3,600	40	$3,600	0	$0	0	$0
$120	Biologists Inspection/hr	0	$0	0	$0	40	$4,800	40	$4,800	0	$0	0	$0
$95	Report prep /hr	120	$11,400	179.2	$17,024	115	$10,925	160	$15,200	75	$7,125	99	$9,405
	TOTAL PER YEAR		$72,225		$130,758		$80,150		$134,300		$67,950		$110,301

qpt < PCB, Metals 400, PAH

AVS/SEM ~~[illegible]~~ 290

1537
− 290 AVS/SEM
+ 100 quoted
~1350

Costs from 8/6/96

CTO 197 CLC 163

rub/demob @ 13,500

drilling @ $70/ft

Sample collect @ 30/ft

waste haulg @ 15/ft

115/ft x 5' per station

= 575 avg 600

CALCULATION WORKSHEET Order No. 19116 (01-91)

CLIENT Navy	JOB NUMBER 5278-0332
SUBJECT McAllister FS - Costing	
BASED ON	DRAWING NUMBER
BY G. Bullard / CHECKED BY	APPROVED BY / DATE 5-8-98

talked to Christie Davis (NORTHDIV) 610-595-0724 regarding costs of pontoon dam during construction of the landfill cap

- bid costs were approx 147.63 / linear foot incl. installation, take down, rental fee + pump operation. these costs were for only operation of approx. 300' at a time (low # of pumps). Total approach costs were around $400,000. However actual costs were much higher due to the extended schedule. She didn't know the actual costs without researching invoices and totaling the charges.

const. $ 833,534
design engineering @ 6% $50,012
883,546
engineering oversight 10% 90,000
973,546

$8.93/sqft

NEW HAMPSHIRE PLATING CO. SITE FS Merrimack, NH
CAPITAL COSTS FOR ALTERNATIVE No. SC2
Consolidation, Capping, and Institutional Controls
[C:\ARCS1\NHPC\DRFS\COST\NHPSC2.WK3] 3 APR 96

Sheet 2 of 4

Item	Qty	Unit	Unit Cost ($) Sub.	Mat.	Labor	Equip.	Total Cost ($) Sub.	Mat.	Labor	Equip.	Total Direct Cost ($)	Comments
SOILS EXCAVATION & HAULING												
1) Excavate contaminated soils to PRG-W												
1a) from bldg area	5926	CY	0.00	0.00	0.54	1.64	0	0	3,200	9,719	12,919	
1b) from Lagoons 3&4	11661	CY	0.00	0.00	0.54	1.64	0	0	6,297	19,124	25,421	[022 242 4220]
1c) from N. Wetland	2621	CY	0.00	0.00	0.54	1.64	0	0	1,415	4,298	5,714	
1d) from Miscellaneous Areas	200	CY	0.00	0.00	0.54	1.64	0	0	108	328	436	
1e) GC chemical screening	10	MO	0.00	500.00	3,000.00	2,883.00	0	5,000	30,000	28,830	63,830	
1f) XRF metals screening	10	MO	0.00	500.00	3,000.00	2,800.00	0	5,000	30,000	28,000	63,000	
1g) Construction survey crew (2p @ 3 day/wk)	90	DAY	700.00	0.00	0.54	1.64	63,000	0	49	148	63,196	
2) Haul to cap area (12 CY truck)							0	0	0			
2a) from bldg area	5926	CY	0.00	0.00	0.53	1.33	0	0	3,141	7,882	11,022	[022 266 0320]
2b) from Lagoons 3&4	11661	CY	0.00	0.00	0.53	1.33	0	0	6,180	15,509	21,689	
2c) from N. Wetland	2621	CY	0.00	0.00	0.53	1.33	0	0	1,389	3,486	4,875	
2d) from Miscellaneous Areas	200	CY	0.00	0.00	0.53	1.33	0	0	106	266	372	
3) Loading soils into trucks	20408	CY	0.00	0.00	0.23	1.34	0	0	4,694	27,347	32,041	[022 238 0300]
3a) Loading crushed monolith into trucks	6300	CY	0.00	0.00	0.23	1.34	0	0	1,449	8,442	9,891	
SUBGRADE PLACEMENT & COMPACTION												
1) Soil placement 12" lifts	20408	CY	0.00	0.00	0.23	0.34	0	0	4,694	6,939	11,633	[022 208 3020]
2) Monolith placement 12" lifts	6300	CY	0.00	0.00	0.23	0.34	0	0	1,449	2,142	3,591	
3) Soil Compaction 12" lifts	26708	CY	0.00	0.00	0.11	0.13	0	0	2,938	3,472	6,410	[022 226 5100]
LOW PERMEABILITY CAPPING												
1) Gas Vent Layer, 12"												
1a) gas vent sand	4500	CY	0.00	12.00	0.00	0.00	0	54,000	0	0	54,000	
1b) placement	4500	CY	0.00	0.00	0.23	0.34	0	0	1,035	1,530	2,565	[022 208 3020]
1b)gas vents/piping, 10 vents	40	LF	0.00	2.60	2.65	0.00	0	104	106	0	210	[026 678 2180]
2) GCL, supply & install	108900	SF	0.00	0.70	0.00	0.00	0	76,230	0	0	76,230	
3) FML, 60 mil smooth HDPE	108900	SF	0.00	0.56	0.00	0.00	0	60,984	0	0	60,984	
4) Drainage Layer, 12"												
4a) drainage sand	4500	CY	0.00	12.00	0.00	0.00	0	54,000	0	0	54,000	
4b) placement	4500	CY	0.00	0.00	0.23	0.34	0	0	1,035	1,530	2,565	[022 208 3020]
5) Geotextile 16oz, non-woven	108900	SF	0.00	0.27	0.00	0.00	0	29,403	0	0	29,403	
6) Cover Soil Layer												
6a) cover soil fill, 12"	4500	CY	0.00	10.00	0.00	0.00	0	45,000	0	0	45,000	
6b) placement	4500	CY	0.00	0.00	0.23	0.34	0	0	1,035	1,530	2,565	[022 208 3020]
6c) compaction	4500	CY	0.00	0.00	0.11	0.13	0	0	495	585	1,080	[022 226 5100]
6d) topsoil, 6"	2250	CY	0.00	12.00	0.00	0.00	0	27,000	0	0	27,000	
6e) placement	2250	CY	0.00	0.00	0.23	0.34	0	0	518	765	1,283	[022 208 3020]
7) Perimeter Drainage												
7a) riprap surface drain	311	CY	0.00	14.00	0.00	0.00	0	4,354	0	0	4,354	
7b) 4" perforated collection pipe, PVC	1400	LF	0.00	2.60	2.65	0.00	0	3,640	3,710	0	7,350	[026 678 2180]
7c) 12" RCP stormwater drainage pipe	1400	LF	0.00	6.65	3.77	0.64	0	9,310	5,278	896	15,484	[027 162 2510]
7d) manholes	8	EA	0.00	2.70	1.23	0.50	0	22	10	4	35	[027 152 1110]
7e) crushed stone bedding	155	CY	0.00	14.00	0.00	0.00	0	2,170	0	0	2,170	

NEW HAMPSHIRE PLATING CO. SITE FS Merrimack, NH
CAPITAL COSTS FOR ALTERNATIVE No. SC2
Consolidation, Capping, and Institutional Controls
[C:\ARCS1\NHPC\DRFS\COST\NHPSC2.WK3] 3 APR 96

Item	Qty	Unit	Unit Cost ($) Sub.	Mat.	Labor	Equip.	Total Cost ($) Sub.	Mat.	Labor	Equip.	Total Direct Cost ($)	Comments
LOW PERMEABILITY CAPPING (cont.)												
7f) trench excavation	1245	CY	0.00	0.00	1.78	1.41	0	0	2,216	1,755	3,972	[022 254 0090]
7g) soil/stone placement	1245	CY	0.00	0.00	0.23	1.34	0	0	286	1,668	1,955	[022 238 0300]
7h) soil/stone compaction	1245	CY	0.00	0.00	0.55	0.22	0	0	685	274	959	[022 226 7240]
8) Rip rap toe protection	115	CY	0.00	14.00	0.00	0.00	0	1,610	0	0	1,610	
9) Revegetation (if required)	109	MSF	0.00	41.00	8.40	6.68	0	4,469	916	728	6,113	
10) Geotechnical Testing	1	LS	45000.00	0.00	0.00	0.00	45,000	0	0	0	45,000	
11) Biotic Barrier												
11a) geotextile	108900	SF	0.00	0.27	0.00	0.00	0	29,403	0	0	29,403	
11b) cobbles – 8" layer	3000	CY	0.00	20.00	0.00	0.00	0	60,000	0	0	60,000	
11c) gravel – 4" layer	1500	CY	0.00	14.00	0.00	0.00	0	21,000	0	0	21,000	
STORMWATER RETENTION PONDS												
1) Fill, 12"	2200	CY	0.00	12.00	0.00	0.00	0	26,400	0	0	26,400	
1a) placement	2200	CY	0.00	0.00	0.23	0.34	0	0	506	748	1,254	[022 208 3020]
2) Erosion Control Mat	25500	SF	0.00	0.65	0.19	0.00	0	16,575	4,845	0	21,420	[022 704 0010]
3) Silt Fence	1700	LF	0.00	0.37	0.19	0.00	0	629	323	0	952	[022 704 1000]
MONOLITH DEMOLITION												
1) Remove soil cover (dozer)	1600	CY	0.00	0.00	1.03	1.54	0	0	1,648	2,464	4,112	[022 242 3220]
2) Haul soil cover	1600	CY	0.00	0.00	0.53	1.33	0	0	848	2,128	2,976	[022 266 0320]
3) Rip monolith (backhoe/FE loader)	6300	CY	0.00	0.00	0.48	0.88	0	0	3,024	5,544	8,568	[022 238 0250]
4) Haul rubble to crushers	6300	CY	0.00	0.00	0.53	1.33	0	0	3,339	8,379	11,718	[022 246 0100]
5) Crush w/2 hammermills	4	WK	0.00	0.00	0.00	4,150.00	0	0	0	16,600	16,600	
SITE RESTORATION												
1) Backfill building area												
1a) Clean fill	5926	CY	0.00	0.00	0.00	0.00	0	0	0	0	0	[17 03 0422]
1b) Place, spread & compact	5926	CY	0.00	0.00	0.34	0.47	0	0	2,015	2,785	4,800	[022 226 5620]
1c) Revegetate Operations Area	131	MSF	0.00	41.00	8.40	6.68	0	5,351	1,096	872	7,318	
3) Topsoil for pugmill area (6")	1500	CY	0.00	17.31	3.22	3.88	0	25,965	4,830	5,820	36,615	[18 05 0301]
3a) Revegetation @ pugmill area	81	MSF	0.00	41.00	8.40	6.68	0	3,321	680	541	4,542	
WELL ABANDONMENT & INSTALLATION												
1) Remove 18 monitoring wells	1080	LF	27.92	0.00	0.00	0.00	30,154	0	0	0	30,154	[33 23 1102]
2) Grout boreholes	1080	LF	12.58	0.00	0.00	0.00	13,586	0	0	0	13,586	[33 23 1823]
3) Install 12 wells; 4S, 4D, 4R												
3a) drilling	840	LF	55.00	0.00	0.00	0.00	46,200	0	0	0	46,200	
3b) rock coring/drilling	40	LF	68.00	0.00	0.00	0.00	2,720	0	0	0	2,720	
3c) wells installation	880	LF	18.00	0.00	0.00	0.00	15,840	0	0	0	15,840	
3d) rig mob/demob/decon/move	1	LS	6000.00	0.00	0.00	0.00	6,000	0	0	0	6,000	
SITE STAFFING												
1) Site manager	10	MO	0.00	0.00	7174.00	0.00	0	0	71,740	0	71,740	
2) Site engineer	10	MO	0.00	0.00	6184.00	0.00	0	0	61,840	0	61,840	
3) Site supervisor/foreman	10	MO	0.00	0.00	4280.00	0.00	0	0	42,800	0	42,800	
4) Site safety officer	10	MO	0.00	0.00	3710.00	0.00	0	0	37,100	0	37,100	
5) Clerical support	10	MO	0.00	0.00	1978.00	0.00	0	0	19,780	0	19,780	
SUM OF TOTAL DIRECT COSTS							507,969	636,637	419,353	256,803	1,820,762	

FOSTER WHEELER ENVIRONMENTAL CORPORATION
One Oxford Valley, Suite 200
Langhorne, PA 19047

Fax Cover Sheet

FAX NUMBER (215) 702-4092

CHARGE NO. 1284.0001.9909 **DATE:** April 29, 1998

TO: Jim Forrelli

FAX: 978-658-7870

FROM: John Gorgol

PHONE: 215-702-4011

RE: Melville soil disposal information

Number of pages including cover sheet: 4

MESSAGE: T&D for lead & arsenic soils from Derecktor was $15.25/ton (See Attachment 1). There was no PCB soil wastesteams. Information on other wastestreams (from Bldg 179) are include as Attachment 2. Please call if you have any questions.

If there are any questions or problems regarding this transmission, please contact Pat at 215-702-4063.

Attachment 1

SPECIFIC SUBCONTRACT REQUIREMENTS

(FIXED PRICE)

From Derecktor Shipyard to Central Landfill, RI

SCOPE OF WORK

The Seller shall provide all labor, equipment and materials necessary to accomplish the Work stated in the attached Buyer's Statement of Work (Specification) entitled Transportation & Disposal of Lead & Arsenic Contaminated Soils, dated February 1998.

COMPENSATION

FIXED UNIT PRICE

For and in consideration of the timely and proper performance of Work authorized as provided herein, Buyer shall pay to the Seller the amount as set forth herein and made a part hereof as follows:

Description	Quantity	Unit Cost	Total Cost
1. Lead & Arsenic Soils (Non-hazardous)	14,000 tons	$15.25/ton*	$213,500.00

*Costs include all federal, state, & local taxes, & any documentation handling costs.

The total price for this subcontract shall not exceed $213,500.00, unless amended in writing by mutual agreement of the parties, buyer is not obligated to compensate Seller beyond the amount stated.

PAYMENT

FIXED UNIT PRICE (NO RETENTION)

Payment to the Seller by the Buyer shall be made 30 days following the receipt and approval by the Buyer of the original and three (3) copies of Seller's invoice. An original and three (3) copies of the invoice including supporting documentation shall be submitted by the Seller to:

FOSTER WHEELER ENVIRONMENTAL CORPORATION
PO Box 4749
Middletown, RI 02842
Attn: Cheryl Sheridan
401-842-6940

Bldg 179 **Attachment 2** 1/2

PRICE QUOTATION FORM
REVISION 1
11/19/97

DESCRIPTION	DISPOSAL METHOD	ESTIMATED QUANTITY	COST PER UNIT	TOTAL COST
F-Listed Hazardous Soil	Macroencapsulation	75 tons	240.00 1)	18,000.00
F-Listed Hazardous Soil	Incineration	303 tons	950.00 2)	287,850.00
F-Listed Hazardous Soils	Chemical Oxidation**	303 tons	405.00 1)	122,715.00
F-Listed Hazardous Soil	Landfilling	42 tons	285.00 1)	11,970.00
Non-hazardous Soil	Landfilling for Landfill Cover	840 tons	$29.75/ton(roll-off) $24,990.00 $23.50/ton(dump trailer) $19,740.00	
Non-hazardous Concrete	Landfilling	180 tons	85.00 3)	15,300.00
20 yd Roll-off Containers		Weekly Rental	50.00/week	
Demmurage*		Per hour	65.00/hour	
Demmurage		Per Half-day (4 hours)***	260.00	

Notes:

- Roll-off container costs should include all drop-off, one-hour demurrage, and pick-up costs.
- Transportation costs should include all federal, state, and local taxes, and any documentation & handling costs.
- Disposal costs should include any federal, state, or local taxes, and any documentation handling costs.
- Subcontractor will be expected to be on-site daily to transport material & relocate roll-off containers.
- *After first hour
- **Option which would be utilized rather than incineration, based on analytical results.
- ***Four hour Rate to commence after initial first hour on-site.

* Non-Hazardous Soil for Landfilling 840 tons @..... $85.00/ton $71,400.00

2/2

Disposal Facilities

Hazardous:

1. (EQ) The Environmental Quality Co.
   Belleville, MI

2. Waste Technologies Industries (WTI)
   East Liverpool, OH

4. General Chemical Corporation
   Framingham, MA

Non- Hazardous:

3. Laidlaw Landfill
   Plainville, MA

RSMeans

Heavy Construction Cost Data

11th Annual Edition

RECEIVED
JAN - 3 1997
Brown & Root Environmental
Stoughton, Massachusetts 01867

1997

Senior Editor
Jesse R. Page

Contributing Editors
Thomas J. Akins
Barbara Balboni
John H. Chiang, PE
Paul C. Crosscup
John H. Ferguson, PE
Mark H. Kaplan, Jr.
Robert W. Mewis
Melville J. Mossman, PE
John J. Moylan
Jeannene D. Murphy
Stephen C. Plotner
Michael J. Regan
Kornelis Smit
William R. Tennyson, II
Phillip R. Waier, PE
James N. Wills
Rory Woolsey

Manager, Engineering Operations
Patricia L. Jackson, PE

President and CEO
Perry B. Sells

Vice President, Editorial Operations and Development
Roger J. Grant

Vice President, Sales and Marketing
John M. Shea

Vice President, Operations and CFO
Andrew J. Centauro

Production Manager
Karen L. O'Brien

Production Coordinator
Marion E. Schofield

Technical Support
Michele S. Able
Wayne D. Anderson
Thomas J. Dion
Michael H. Donelan
Gary L. Hoitt
Marla A. Marek
Paula Reale-Camelio
Kathryn S. Rodriguez
Ali Vaghar

Art Director
Helen A. Marcella

Book & Cover Design
Norman R. Forgit

Editorial Advisory Board

James E. Armstrong
Property and Utility Manager
Massachusetts Development Finance Agency

William R. Barry
Chief Estimator
Stone & Webster Corporation

Charles Buddenhagen, PE
Executive Director
Division of Facilities
Georgetown University

Robert Cox
Assistant Professor
School of Construction
University of Florida

Roy F. Gilley III, AIA
Principal
Gilley Hinkel Architects

Kenneth K. Humphreys, PhD, PE, CCE
Executive Director-Retired
AACE International

Martin F. Joyce
Vice President, Utility Division
Bond Brothers, Inc.

Donald R. Wong
Project Manager Director
Whalen & Company, Inc.

R.S. Means Company, Inc. ("R.S. Means"), its authors, editors and engineers, apply diligence and judgment in locating and using reliable sources for the information published. **However, R.S. Means makes no express or implied warranty or guarantee in connection with the content of the information contained herein, including the accuracy, correctness, value, sufficiency, or completeness of the data, methods and other information contained herein. R.S. Means makes no express or implied warranty of merchantability or fitness for a particular purpose.** R.S. Means shall have no liability to any customer or third party for any loss, expense, or damage including consequential, incidental, special or punitive damages, including lost profits or lost revenue, caused directly or indirectly by any error or omission, or arising out of, or in connection with, the information contained herein.

No part of this publication may be reproduced, stored in a retrieval system, or transmitted in any form or by any means without prior written permission of R.S. Means Company, Inc.

First Printing

024 520 | Railroad Trackwork

		CREW	DAILY OUTPUT	LABOR-HOURS	UNIT	1997 BARE COSTS MAT.	LABOR	EQUIP.	TOTAL	TOTAL INCL O&P
0813	90 lb. relay rail (R024-520)	B-14	57	.842	L.F.	40.50	18.10	3.79	62.39	77
0820	100 lb. rail		57	.842		51	18.10	3.79	72.89	88.50
0822	100 lb. relay rail		57	.842		41	18.10	3.79	62.89	77.50
0830	110 lb. rail		57	.842		53	18.10	3.79	74.89	91
0832	110 lb. relay rail		57	.842		52.50	18.10	3.79	74.39	90
1002	Steel ties in concrete, incl. fasteners & plates									
1003	80 lb. rails	B-14	22	2.182	L.F.	88	47	9.80	144.80	182
1005	80 lb. relay rail		22	2.182		71.50	47	9.80	128.30	163
1012	90 lb. rail		22	2.182		84	47	9.80	140.80	177
1015	90 lb. relay rail		22	2.182		71.50	47	9.80	128.30	163
1020	100 lb. rail		22	2.182		92.50	47	9.80	149.30	187
1025	100 lb. relay rail		22	2.182		72	47	9.80	128.80	164
1030	110 lb. rail		22	2.182		95	47	9.80	151.80	190
1035	110 lb. relay rail		22	2.182		79	47	9.80	135.80	171
1200	Switch timber, for a #8 switch, pressure treated		3.70	12.973	M.B.F.	580	279	58.50	917.50	1,150
1300	Complete set of timbers, 3.7 M.B.F. for #8 switch		1	48	Total	2,300	1,025	216	3,541	4,400
1400	Ties, concrete, 8'-6" long, 30" O.C.		80	.600	Ea.	87.50	12.90	2.70	103.10	119
1600	Wood, pressure treated, 6" x 8" x 8'-6", C.L. lots		90	.533		26.50	11.45	2.40	40.35	50
1700	L.C.L. lots		90	.533		26	11.45	2.40	39.85	49
1900	Heavy duty, 7" x 9" x 8'-6", C.L. lots		70	.686		30	14.75	3.09	47.84	59.50
2000	L.C.L. lots		70	.686		29	14.75	3.09	46.84	58.50
2200	Turnouts, #8, incl. 100 lb. rails, plates, bars, frog, switch pt.									
2300	Timbers and ballast 6" below bottom of tie	B-14	.50	96	Ea.	17,200	2,075	430	19,705	22,600
2400	Wheel stops, fixed		14	3.429	Pr.	420	73.50	15.45	508.95	595
2450	Hinged		14	3.429	"	505	73.50	15.45	593.95	690

024 820 | Dredging

0010	**DREDGING** Mobilization and demobilization., add to below, minimum	B-8	.53	120	Total		2,750	4,175	6,925	8,850
0100	Maximum	"	.10	640	"		14,500	22,100	36,600	46,900
0300	Barge mounted clamshell excavation into scows,									
0310	Dumped 20 miles at sea, minimum	B-57	310	.155	C.Y.		3.59	3.50	7.09	9.45
0400	Maximum	"	213	.225	"		5.25	5.10	10.35	13.75
0500	Barge mounted dragline or clamshell, hopper dumped,									
0510	pumped 1000' to shore dump, minimum	B-57	340	.141	C.Y.		3.27	3.19	6.46	8.60
0525	All pumping uses 2000 gallons of water per cubic yard									
0600	Maximum	B-57	243	.198	C.Y.		4.58	4.47	9.05	12.05
1000	Hydraulic method, pumped 1000' to shore dump, minimum		460	.104			2.42	2.36	4.78	6.35
1100	Maximum		310	.155			3.59	3.50	7.09	9.45
1400	Into scows dumped 20 miles, minimum		425	.113			2.62	2.55	5.17	6.90
1500	Maximum		243	.198			4.58	4.47	9.05	12.05
1600	For inland rivers and canals in South, deduct								30%	30%

024 840 | Seawall & Bulkheads

0010	**BULKHEADS** Reinforced concrete, include footing and tie-backs									
0020	Up to 6' high, minimum	C-17C	28	2.964	L.F.	36.50	80	14.45	130.95	183
0060	Maximum		24.25	3.423		43	92.50	16.70	152.20	213
0100	12' high, minimum		20	4.150		81.50	112	20.50	214	290
0160	Maximum		18.50	4.486		89	121	22	232	315
0180	Precast bulkhead, complete, including									
0190	vertical and battered piles, face panels, and cap									
0195	Using 16' vertical piles				L.F.				220	240
0196	Using 20' vertical piles				"				230	250
0200	Steel sheeting, with 4' x 4' x 8" concrete deadmen, @ 10' O.C.									
0210	12' high, shore driven	B-40	27	2.370	L.F.	56	62.50	71	189.50	244
0260	Barge driven	B-76	15	4.800	"	58	126	131	315	420

022 200 | Excav./Backfill/Compact.

			CREW	DAILY OUTPUT	LABOR-HOURS	UNIT	1997 BARE COSTS MAT.	LABOR	EQUIP.	TOTAL	TOTAL INCL O&P
258	1750	36" deep	A-1	135	.059	L.F.		1.20	.45	1.65	2.40
	2000	Chain trencher, 40 H.P. operator riding									
	2050	6" wide trench and backfill, 12" deep	B-54	1,200	.007	L.F.		.17	.17	.34	.45
	2100	18" deep		1,000	.008			.21	.21	.42	.54
	2150	24" deep		975	.008			.21	.21	.42	.55
	2200	36" deep		900	.009			.23	.23	.46	.60
	2250	48" deep		750	.011			.27	.28	.55	.72
	2300	60" deep		650	.012			.32	.32	.64	.83
	2400	8" wide trench and backfill, 12" deep		1,000	.008			.21	.21	.42	.54
	2450	18" deep		950	.008			.22	.22	.44	.57
	2500	24" deep		900	.009			.23	.23	.46	.60
	2550	36" deep		800	.010			.26	.26	.52	.68
	2600	48" deep		650	.012			.32	.32	.64	.83
	2700	12" wide trench and backfill, 12" deep		975	.008			.21	.21	.42	.55
	2750	18" deep		860	.009			.24	.24	.48	.64
	2800	24" deep		800.	.010			.26	.26	.52	.68
	2850	36" deep		725	.011			.28	.29	.57	.74
	3000	16" wide trench and backfill, 12" deep		835	.010			.25	.25	.50	.65
	3050	18" deep		750	.011			.27	.28	.55	.72
	3100	24" deep		700	.011			.29	.30	.59	.78
	3200	Compaction with vibratory plate, add								50%	50%
	9100	For clay or till, add up to								150%	150%
262	0010	**FILL** Spread dumped material, by dozer, no compaction	B-10B	1,000	.012	C.Y.		.30	.85	1.15	1.40
	0100	By hand	1 Clab	12	.667	"		13.50		13.50	21.50
	0150	Spread fill, from stockpile with 2-1/2 C.Y. F.E. loader									
	0170	130 H.P., 300' haul	B-10P	600	.020	C.Y.		.49	1.36	1.85	2.26
	0190	With dozer 300 H.P., 300' haul	B-10M	600	.020	"		.49	1.85	2.34	2.80
	0400	For compaction of embankment, see div. 022-226									
	0500	Gravel fill, compacted, under floor slabs, 4" deep	B-37	10,000	.005	S.F.	.11	.10	.01	.22	.30
	0600	6" deep		8,600	.006		.17	.12	.02	.31	.40
	0700	9" deep		7,200	.007		.28	.14	.02	.44	.56
	0800	12" deep		6,000	.008		.40	.17	.02	.59	.74
	1000	Alternate pricing method, 4" deep		120	.400	C.Y.	8.50	8.60	1.18	18.28	24
	1100	6" deep		160	.300		8.50	6.45	.89	15.84	20.50
	1200	9" deep		200	.240		8.50	5.15	.71	14.36	18.25
	1300	12" deep		220	.218		8.50	4.69	.65	13.84	17.40
	1500	For fill under exterior paving, see division 022-308									
266	0011	**HAULING** Excavated or borrow material, highway haulers	R022-240								
	0012	bank measure, no loading included									
	0020	6 C.Y. dump truck, 1/4 mile round trip, 5.0 loads/hr.	B-34A	240	.033	C.Y.		.71	1.44	2.15	2.67
	0030	1/2 mile round trip, 4.1 loads/hr.		197	.041			.86	1.75	2.61	3.26
	0040	1 mile round trip, 3.3 loads/hr.		160	.050			1.07	2.16	3.23	4.02
	0100	2 mile round trip, 2.6 loads/hr.		125	.064			1.36	2.76	4.12	5.15
	0150	3 mile round trip, 2.1 loads/hr.		100	.080			1.70	3.46	5.16	6.40
	0200	4 mile round trip, 1.8 loads/hr.		85	.094			2	4.07	6.07	7.55
	0310	12 C.Y. dump truck, 1/4 mile round trip 3.7 loads/hr.	B-34B	356	.022			.48	1.21	1.69	2.07
	0320	1/2 mile round trip, 3.2 loads/hr.		308	.026			.55	1.40	1.95	2.39
	0330	1 mile round trip 2.7 loads/hr.		260	.031			.66	1.66	2.32	2.83
	0400	2 mile round trip, 2.2 loads/hr.		210	.038			.81	2.05	2.86	3.51
	0450	3 mile round trip, 1.9 loads/hr.		180	.044			.95	2.39	3.34	4.09
	0500	4 mile round trip, 1.6 loads/hr.		150	.053			1.14	2.87	4.01	4.91
	0540	5 mile round trip, 1 load/hr.		98	.082			1.74	4.40	6.14	7.50
	0550	10 mile round trip, 0.75 load/hr.		49	.163			3.48	8.80	12.28	15
	0560	20 mile round trip, 0.5 load/hr.		32	.250			5.30	13.45	18.75	23
	0600	16.5 C.Y. dump trailer, 1 mile round trip, 2.6 loads/hr.	B-34C	340	.024			.50	1.55	2.05	2.47

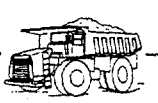

022 200 | Excav./Backfill/Compact.

		CREW	DAILY OUTPUT	LABOR-HOURS	UNIT	1997 BARE COSTS MAT.	LABOR	EQUIP.	TOTAL	TOTAL INCL O&P
266 0700	2 mile round trip, 2.1 loads/hr. R022-240	B-34C	275	.029	C.Y.		.62	1.91	2.53	3.05 266
1000	3 mile round trip, 1.8 loads/hr.		235	.034			.73	2.24	2.97	3.57
1100	4 mile round trip, 1.6 loads/hr.		210	.038			.81	2.50	3.31	4
1110	5 mile round trip, 1 load/hr.		132	.061			1.29	3.98	5.27	6.35
1120	10 mile round trip, .75 load/hr.		100	.080			1.70	5.25	6.95	8.40
1130	20 mile round trip, .5 load/hr.		66	.121			2.58	7.95	10.53	12.70
1150	20 C.Y. dump trailer, 1 mile round trip, 2.5 loads/hr.	B-34D	400	.020			.43	1.32	1.75	2.10
1200	2 mile round trip, 2 loads/hr.		320	.025			.53	1.65	2.18	2.63
1220	3 mile round trip, 1.7 loads/hr.		270	.030			.63	1.96	2.59	3.12
1240	4 mile round trip, 1.5 loads/hr.		240	.033			.71	2.20	2.91	3.51
1245	5 mile round trip, 1.1 load/hr.		172	.047			.99	3.07	4.06	4.90
1250	10 mile round trip, .85 load/hr.		136	.059			1.25	3.88	5.13	6.20
1255	20 mile round trip, .6 load/hr.		96	.083			1.77	5.50	7.27	8.80
1300	Hauling in medium traffic, add								20%	20%
1400	Heavy traffic, add								30%	30%
1600	Grading at dump, or embankment if required, by dozer	B-10B	1,000	.012			.30	.85	1.15	1.40
1800	Spotter at fill or cut, if required	1 Clab	8	1	Hr.		20.50		20.50	32
2000	Off highway haulers									
2010	22 C.Y. rear/bottom dump, 1000' rnd trip, 4.5 loads/hr.	B-34F	800	.010	C.Y.		.21	1.26	1.47	1.71
2020	1/2 mile round trip, 4.2 loads/hr.		740	.011			.23	1.36	1.59	1.84
2030	1 mile round trip, 3.9 loads/hr.		685	.012			.25	1.47	1.72	1.99
2040	2 mile round trip, 3.3 loads/hr.		580	.014			.29	1.73	2.02	2.35
2050	34 C.Y. rear or bottom dump, 1000' round trip, 4 loads/hr.	B-34G	1,090	.007			.16	1.22	1.38	1.58
2060	1/2 mile round trip, 3.8 loads/hr.		1,035	.008			.16	1.29	1.45	1.66
2070	1 mile round trip, 3.5 loads/hr.		950	.008			.18	1.40	1.58	1.82
2080	2 mile round trip, 3.0 loads/hr.		815	.010			.21	1.63	1.84	2.12
2090	42 C.Y. rear or bottom bump, 1000' round trip, 3.8 loads/hr.	B-34H	1,275	.006			.13	1.24	1.37	1.58
2100	1/2 mile round trip, 3.6 loads/hr.		1,210	.007			.14	1.31	1.45	1.66
2110	1 mile round trip, 3.3 loads/hr.		1,110	.007			.15	1.43	1.58	1.81
2120	2 mile round trip, 2.8 loads/hr.		940	.009			.18	1.69	1.87	2.13
2130	60 C.Y. rear or bottom dump, 1000' round trip, 3.6 loads/hr.	B-34J	1,730	.005			.10	1.24	1.34	1.52
2140	1/2 mile round trip, 3.4 loads/hr.		1,630	.005			.10	1.32	1.42	1.61
2150	1 mile round trip, 3.1 loads/hr.		1,490	.005			.11	1.44	1.55	1.77
2160	2 mile round trip, 2.6 loads/hr.		1,250	.006			.14	1.72	1.86	2.10
3000	Rough terrain or steep grades, add to above								100%	
4500	Dust control, light	B-59	1	8	Day		170	515	685	825
4501	Heavy	"	.50	16			340	1,025	1,365	1,650
4600	Haul road maintenance	B-86A	1	8			214	535	749	920
270 0010	**HORIZONTAL BORING** Casing only, 100' minimum,									270
0020	not incl. jacking pits or dewatering									
0100	Roadwork, 1/2" thick wall, 24" diameter casing	B-42	10	6.400	L.F.	49.50	146	109	304.50	410
0200	36" diameter		9.50	6.737		70	154	114	338	450
0300	48" diameter		9	7.111		110	162	121	393	515
0500	Railroad work, 24" diameter		7	9.143		49.50	209	155	413.50	560
0600	36" diameter		6.50	9.846		70	225	167	462	625
0700	48" diameter		6	10.667		110	244	181	535	715
0900	For ledge, add								145	175
1000	Small diameter boring, 3", sandy soil	B-82	1,050	.015		14.75	.35	.04	15.14	16.85
1040	Rocky soil	"	550	.029		14.75	.67	.08	15.50	17.40
1100	Prepare jacking pits, incl. mobilization & demobilization, minimum				Ea.				2,650	3,150
1101	Maximum				"				15,000	18,000
274 0010	**MOBILIZATION OR DEMOBILIZATION** Up to 25 miles R016-410									274
0020	Dozer or loader, 105 H.P.	B-34K	4	2	Ea.		42.50	198	240.50	284
0100	300 H.P.		3.80	2.105			45	208	253	298
0300	Scraper, towed type (incl. tractor), 6 C.Y. capacity		3.50	2.286			48.50	226	274.50	325

Environmental Remediation

Assemblies Cost Book

RECEIVED
JAN - 7 1998
Brown & Root Environmental
Wilmington, Massachusetts

1998

Senior Editor
Delta Technologies Group, Inc.
Richard R. Rast, President

Technical Editors
Delta Technologies Group, Inc.
Tim Burks
Kevin L. Klink, PE
Jacqueline Crenca Rast, PE
R. Douglas Taylor, PE
C. Tim Wallace
Laura Williams

Contributing Editors
R.S. Means Company
Jeannene D. Murphy
Jesse R. Page
Phillip R. Waier, PE

R.S. Means Company

President
Durwood S. Snead

Vice President and General Manager
Roger J. Grant

Vice President, Sales and Marketing
John M. Shea

Vice President, Operations
Andrew J. Centauro

Manager, Engineering Operations
John H. Ferguson, PE

Production Manager
Michael Kokernak

Production Coordinator
Marion E. Schofield

Underlying portions of this work are individually owned and copyrighted by Delta Technologies Group, Inc. and ECHOS, L.L.C. and may not be reproduced, translated or appropriated without their prior written authorization.

All rights reserved. No part of this work may be reproduced, translated or appropriated in any form or by any means (including electronic, mechanical or other such as photocopying, recording or any information storage and retrieval system) without prior written authorization.

Copyright 1998 Delta Technologies Group, Inc. and ECHOS, L.L.C.
All rights reserved.

ECHOS

ENVIRONMENTAL
COST HANDLING
OPTIONS AND
SOLUTIONS

Delta Technologies Group, Inc.
7340 E. Caley Ave., Suite 120
Englewood, CO 80111
(303) 771-3103

Published by
R.S. Means Company, Inc.
and Delta Technologies Group, Inc.

Air Sparged Hydrocyclone

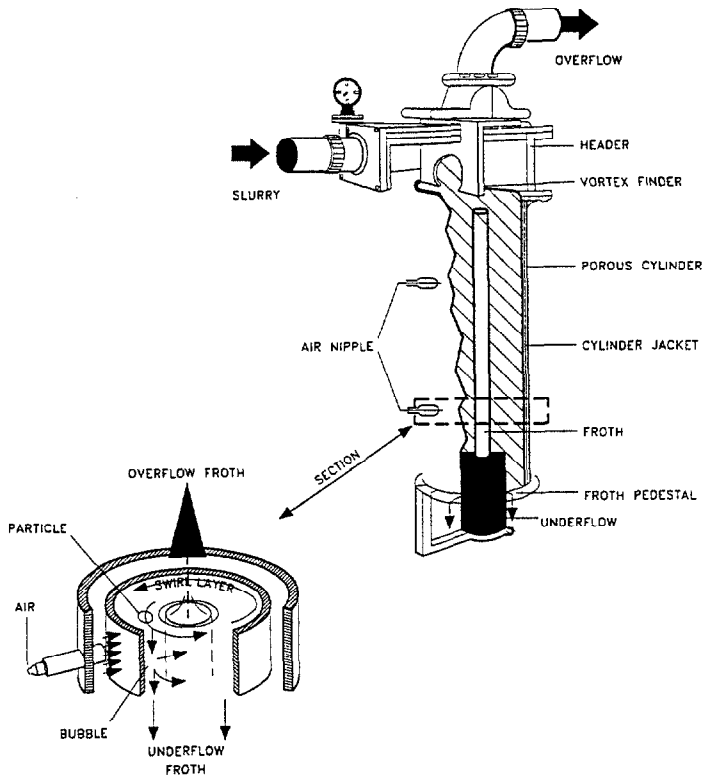

General:

An air sparged hydrocyclone (ASH) is a physical separation device which has applications in the recovery of metals/minerals from mine tailings, the removal of fine contaminant particles from soils, and the removal of oil and volatile organic carbon (VOC) compounds from water.

Common Cost Components:

1. *Groundwater Extraction Wells*
2. *Excavation of Contaminated Soils*
3. *Material Screening (Materials Plant)*
4. *Bulk Material Storage*
5. *Injection wells*
6. *Discharge to POTW*
7. *Coagulation/Flocculation*
8. *Media Filtration*
9. *Chemical Precipitation*
10. *Dewatering (Sludge)*
11. *Oil/Water Separation*
12. *Ultraviolet Oxidation*
13. *Sampling and Analysis*

Typical Treatment Train:

ASH systems require a feed/conditioning tank, reagent feed equipment, compressed air supply, pumps, piping, and instrumentation. Trailer-mounted ASH systems have 2-4 hydrocyclones consisting of rougher (upstream) and scavenger (downstream) units. Trailer-mounted ASH systems are pre-wired, pre-plumbed, and contain all operating equipment except for holding tanks (optional).

Other Cost Considerations:

Electrical distribution, fencing, clearing and grubbing

1998 by ECHOS. All rights reserved

Air Sparged Hydrocyclone

Assembly	Description	Unit	Unit Cost by Safety Level A	B	C	D	E
	Capital Costs						
17 03 0220	910, 1.25 CY, Wheel Loader	HOUR	130.20	104.06	87.23	61.63	55.86
17 03 0221	916, 1.5 CY, Wheel Loader	HOUR	114.32	90.83	76.64	53.69	47.92
17 03 0222	926, 2.0 CY, Wheel Loader	HOUR	154.30	124.14	103.30	73.68	67.91
17 03 0223	950, 3.0 CY, Wheel Loader	HOUR	180.10	145.64	120.50	86.58	80.81
17 03 0224	966, 4.0 CY, Wheel Loader	HOUR	211.58	171.88	141.48	102.32	96.55
17 03 0225	980, 5.25 CY, Wheel Loader	HOUR	298.84	244.38	199.68	145.79	139.74
17 03 0345	Standby, 910, 1.25 CY Wheel Loader	HOUR	15.13	12.61	10.09	7.57	7.57
17 03 0346	Standby, 916, 1.5 CY Wheel Loader	HOUR	11.32	9.44	7.55	5.66	5.66
17 03 0347	Standby, 926, 2.0 CY Wheel Loader	HOUR	21.40	17.83	14.27	10.70	10.70
17 03 0348	Standby, 950, 3.0 CY Wheel Loader	HOUR	27.24	22.70	18.16	13.62	13.62
17 03 0349	Standby, 966, 4.0 CY Wheel Loader	HOUR	34.27	28.56	22.85	17.13	17.13
17 03 0350	Standby, 980, 5.25 CY Wheel Loader	HOUR	57.52	47.94	38.35	28.76	28.76
19 01 0207	4", Class 200, PVC Piping	LF	12.33	9.86	8.72	6.32	5.50
19 01 0208	6", Class 200, PVC Piping	LF	14.95	12.20	10.93	8.27	7.36
19 04 0403	4,000 Gallon Polyethylene Wastewater Tank, Rental	MONTH	545.90	545.90	545.90	545.90	545.90
19 04 0405	6,000 Gallon, Polyethylene Aboveground Wastewater Holding Tank, Rental	MONTH	641.30	641.30	641.30	641.30	641.30
19 04 0406	21,000 Gallon Steel Wastewater Holding Tank, Rental	MONTH	1,219	1,219	1,219	1,219	1,219
33 10 9657	1,000 Gallon Single-wall Steel Aboveground Tank	EACH	2,118	1,844	1,727	1,463	1,366
33 10 9658	2,000 Gallon Single-wall Steel Aboveground Tank	EACH	3,457	2,997	2,777	2,332	2,183
33 10 9659	3,000 Gallon Single-wall Steel Aboveground Tank	EACH	4,433	3,959	3,733	3,274	3,121
33 10 9660	5,000 Gallon Single-wall Steel Aboveground Tank	EACH	6,079	5,494	5,214	4,646	4,457
33 10 9661	8,000 Gallon Single-wall Steel Aboveground Tank	EACH	7,876	7,205	6,884	6,234	6,017
33 10 9662	10,000 Gallon Single-wall Steel Aboveground Tank	EACH	9,147	8,415	8,065	7,356	7,119
33 10 9663	12,000 Gallon Single-wall Steel Aboveground Tank	EACH	10,460	9,655	9,270	8,490	8,230
33 10 9664	15,000 Gallon Single-wall Steel Aboveground Tank	EACH	11,591	10,697	10,269	9,402	9,113
33 10 9665	20,000 Gallon Single-wall Steel Aboveground Tank	EACH	14,594	13,445	12,895	11,780	11,408
33 10 9666	30,000 Gallon Single-wall Steel Aboveground Tank	EACH	6,427	5,085	4,444	3,143	2,709
33 13 1301	Rental of 10-20 GPM Turnkey Mobile ASH Units	MO	1,650	1,650	1,650	1,650	1,650
33 13 1302	Rental of 100-400 GPM Turnkey Mobile ASH Units	MO	8,501	8,501	8,501	8,501	8,501
33 13 1305	Purchase of 10-20 GPM Turnkey Mobile ASH Units	EA	20,064	20,050	20,044	20,030	20,026
33 13 1306	Purchase of 100-400 GPM Turnkey Mobile ASH Units	EA	160,141	160,113	160,100	160,073	160,063
33 13 1307	Install a 10-20 GPM Unit (equip. not included)	EA	62.31	48.33	41.89	28.35	23.68
33 13 1308	Install a 100-400 GPM Unit (equip. not included)	EA	124.61	96.66	83.77	56.70	47.36

1998 by ECHOS. All rights reserved

Air Sparged Hydrocyclone

Assembly	Description	Unit	Unit Cost by Safety Level A	B	C	D	E
	Capital Costs						
33 13 1310	Purchase of a 2 in., 10-20 GPM ASH device	EA	5,051	5,039	5,034	5,023	5,019
33 13 1311	Purchase of a 6 in., 100-400 GPM ASH device	EA	15,068	15,053	15,046	15,032	15,027
33 13 1312	Purchase of a 15 in., 1,200-1,600 GPM ASH device	EA	30,087	30,068	30,059	30,041	30,035
33 13 1320	Transport of 10-20 GPM Turnkey Mobile ASH Units	MI	1.65	1.65	1.65	1.65	1.65
33 13 1321	Transport of 100-400 GPM Turnkey Mobile ASH Units	MI	2.05	2.05	2.05	2.05	2.05
33 13 1322	Startup of a 10-20 GPM Unit	EA	37.77	29.12	25.41	17.04	13.98
33 13 1323	Startup of a 100-400 GPM Unit Treating Solids	EA	151.10	116.47	101.65	68.18	55.91
33 13 1324	Startup of a 100-400 GPM Unit Treating Liquids	EA	75.55	58.23	50.82	34.09	27.95
33 13 1330	Decon/Breakdown of 10-20 GPM Turnkey Mobile ASH Units	EA	62.31	48.33	41.89	28.35	23.68
33 13 1331	Decon/Breakdown of 100-400 GPM Turnkey Mobile ASH Units	EA	124.61	96.66	83.77	56.70	47.36
33 13 1340	Operational Labor for a 10-20 GPM ASH Unit	HR	0.94	0.73	0.64	0.43	0.35
33 13 1341	Oper. Labor for a 100-400 GPM ASH Unit Treating Solids	HR	1.89	1.46	1.27	0.85	0.70
33 13 1342	Oper. Labor for a 100 - 400 GPM Unit Treating Liquids	HR	0.94	0.73	0.64	0.43	0.35
33 13 1345	Maintenance for 10-20 GPM Turnkey Mobile ASH Units	HR	0.94	0.73	0.64	0.43	0.35
33 13 1346	Maintenance for 100-400 GPM Turnkey Mobile ASH Units	HR	1.89	1.46	1.27	0.85	0.70
33 13 1347	Monthly Spare Parts Charge for 10-20 GPM ASH Units	MO	85.01	85.01	85.01	85.01	85.01
33 13 1348	Monthly Spare Parts Charge for 100-400 GPM ASH Units	MO	650.06	650.06	650.06	650.06	650.06
33 13 1360	Reagent Frother Usage	LB	0.72	0.72	0.72	0.72	0.72
33 23 1306	High Sump Level Switch for Avoiding Overflow	EACH	214.65	214.65	214.65	214.65	214.65
33 26 0104	4" Carbon Steel Piping	LF	23.20	19.86	18.43	15.21	14.02
33 26 0105	6" Carbon Steel Piping	LF	36.37	30.24	27.46	21.52	19.44
33 27 0104	4" PVC, Schedule 40, Tee	EACH	137.04	108.84	96.77	69.51	59.51
33 27 0105	6" PVC, Schedule 40, Tee	EACH	205.86	169.47	153.89	118.72	105.82
33 27 0114	4" PVC, 90 Degree, Elbow	EACH	101.72	80.57	71.51	51.07	43.57
33 27 0115	6" PVC, 90 Degree, Elbow	EACH	135.44	111.27	100.92	77.56	68.99
33 27 0552	4" Carbon Steel 90-degree Elbow, Schedule 80	EACH	190.36	152.53	135.42	98.81	85.97
33 27 0554	6" Carbon Steel 90-degree Elbow, Schedule 80	EACH	297.54	245.36	221.75	171.24	153.54
33 27 0562	4" Carbon Steel Tee, Schedule 80	EACH	307.17	250.43	224.76	169.84	150.59
33 27 0564	6" Carbon Steel Tee, Schedule 80	EACH	452.39	374.65	339.48	264.23	237.85
33 42 0101	Electrical Charge	KWH	0.06	0.06	0.06	0.06	0.06
33 42 0120	Generator Supplied Electricity	kWh	0.08	0.08	0.08	0.08	0.08
33 42 0301	Water	KGAL	8.39	8.39	8.39	8.39	8.39

1998 by ECHOS. All rights reserved

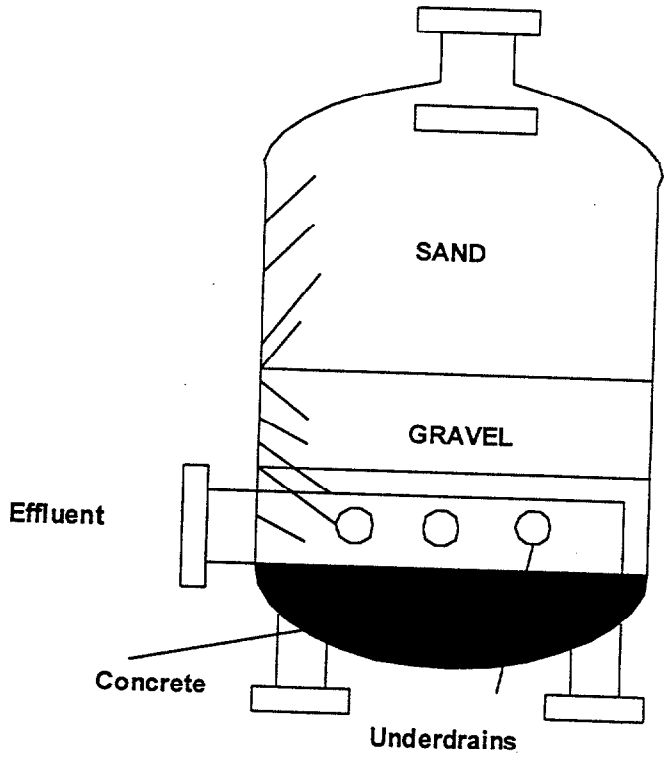

General:

Granular media filters are used to remove suspended solids from waste water as the liquid is forced through a porous granular medium. The filter bed may be a single material (such as sand), or a dual media, (such as sand with an upper layer of coal) or multimedia (including garnet, sand and coal from top to bottom). The bed is contained within a basin and is supported by an underdrain system that allows the filtered liquid to be drawn off while the filter media is retained in place. The filter is periodically backwashed to prevent plugging.

Common Cost Components:

1. *Structural slab*
2. *Piping*
3. *Filtration unit*
4. *Operations and maintenance*

Typical Treatment Train:

Removal of solids after precipitation or coagulation reactions, removal of residual biological floc, pretreatment for air strippers and other treatments, disposal of filter material, treatment and disposal of backwash water, sampling and analysis.

Other Cost Considerations:

Pilot studies to determine optimum design (filter configuration, type/size/depth of filter media, filtration rate, etc.)

1998 by ECHOS. All rights reserved

Division	Assembly	Description	Unit	Unit Cost by Safety Level A	B	C	D	E
		Capital Costs						
18	02 0322	8" Structural Slab on Grade	SF	9.75	8.38	7.71	6.38	5.95
18	02 0324	12" Structural Slab on Grade	SF	11.57	10.04	9.30	7.82	7.34
19	01 0202	1", Class 200, PVC Piping	LF	7.48	5.84	5.07	3.48	2.93
19	01 0204	2", Class 200, PVC Piping	LF	8.86	6.96	6.07	4.23	3.60
19	01 0206	3", Class 200, PVC Piping	LF	11.81	9.34	8.20	5.80	4.98
19	01 0207	4", Class 200, PVC Piping	LF	12.33	9.86	8.72	6.32	5.50
19	01 0208	6", Class 200, PVC Piping	LF	14.95	12.20	10.93	8.27	7.36
19	01 0212	8", Class 150, PVC Piping	LF	18.36	15.27	13.84	10.85	9.82
19	01 0214	12", Class 150, PVC Piping	LF	28.75	24.63	22.72	18.73	17.36
33	13 0101	3' Diameter Electric Automatic Pressure Filter Unit	EACH	9,960	8,539	7,759	6,375	5,978
33	13 0102	4' Diameter Electric Automatic Pressure Filter Unit	EACH	14,937	13,345	12,472	10,923	10,477
33	13 0103	5' Diameter Electric Automatic Pressure Filter Unit	EACH	15,593	14,001	13,128	11,579	11,133
33	13 0104	6' Diameter Electric Automatic Pressure Filter Unit	EACH	20,547	18,788	17,823	16,110	15,618
33	13 0105	7' Diameter Electric Automatic Pressure Filter Unit	EACH	23,444	21,685	20,720	19,007	18,515
33	13 0106	8' Diameter Electric Automatic Pressure Filter Unit	EACH	29,455	27,301	26,120	24,023	23,421
33	26 0101	1" Carbon Steel Piping	LF	6.46	5.28	4.77	3.63	3.21
33	26 0102	2" Carbon Steel Piping	LF	10.50	8.72	7.95	6.23	5.60
33	26 0103	3" Carbon Steel Piping	LF	18.02	15.20	13.99	11.26	10.26
33	26 0104	4" Carbon Steel Piping	LF	23.20	19.86	18.43	15.21	14.02
33	26 0105	6" Carbon Steel Piping	LF	36.37	30.24	27.46	21.52	19.44
33	26 0106	8" Carbon Steel Piping	LF	40.77	34.08	31.15	24.68	22.36
33	26 0108	12" Carbon Steel Piping	LF	75.72	65.62	61.18	51.41	47.89
33	26 0201	1" Stainless Steel Piping, Schedule 40, Threaded	LF	18.67	16.12	15.03	12.56	11.65
33	26 0202	2" Stainless Steel Piping, Schedule 40, Threaded	LF	33.47	29.21	27.39	23.28	21.77
33	26 0203	3" Stainless Steel Piping, Schedule 40, Threaded	LF	57.00	50.61	47.88	41.71	39.45
33	26 0204	4" Stainless Steel Piping, Schedule 40, Threaded	LF	80.15	71.72	68.12	59.98	57.00
33	26 0205	6" Stainless Steel Piping, Schedule 10, Type 316	LF	78.58	70.01	66.14	57.84	54.94
33	26 0206	8" Stainless Steel Piping, Schedule 40, Welded	LF	197.22	183.32	176.89	163.42	158.80
33	26 0209	12" Stainless Steel Piping, Schedule 40, Welded	LF	312.43	295.44	287.57	271.12	265.47
33	41 0101	Pump & Motor Maintenance/Repair	EACH	865.17	671.48	581.58	393.96	329.64
33	42 0101	Electrical Charge	KWH	0.06	0.06	0.06	0.06	0.06
		Operations & Maintenance						
33	41 0101	Pump & Motor Maintenance/Repair	EACH	865.17	671.48	581.58	393.96	329.64

1996 by ECHOS. All rights reserved

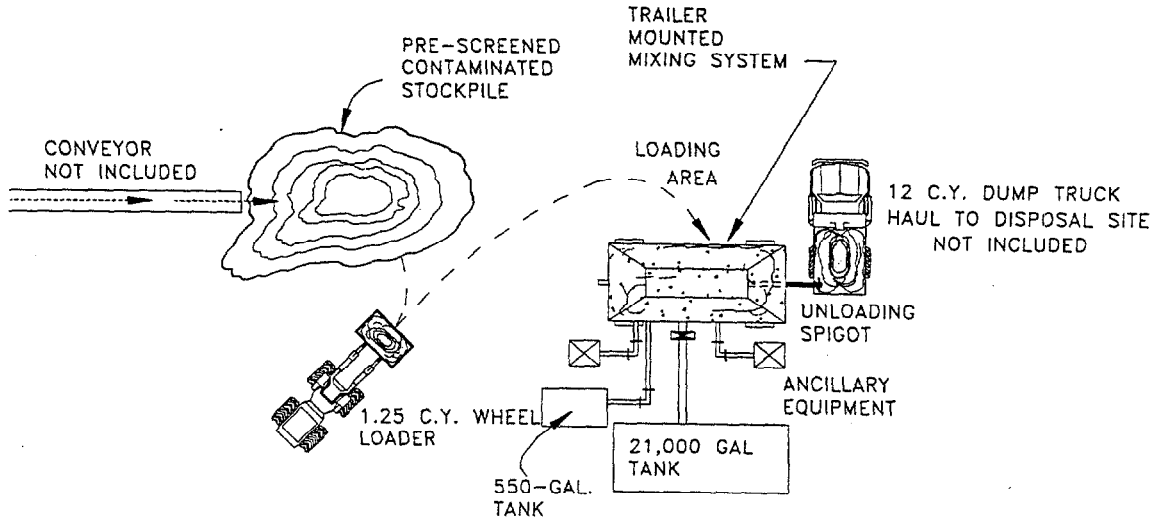

General:

Ex situ solidification/stabilization is a treatment technology in which chemical reagents are mixed with waste to make use of complex chemical and physical reactions to improve physical properties and reduce contaminant solubility, toxicity, and/or mobility. Solidification/stabilization is a viable treatment for contaminated materials when the constituents cannot be treated, recovered, or destroyed by other methods because of technical or economic limitations.

Typical Treatment Train:

Excavation, transportation of wastes to process site, transportation to and from mixing area, drum removal and staging, disposal, sampling and analysis.

Common Cost Components:

1. *Structural slab*
2. *Holding tank*
3. *Equipment purchase or rental: conveyor, hopper, mixing unit, pumps, drum shredder*
4. *Batch processing: load, mix, and unload*
5. *Chemical additives: water, proprietary chemical binders, portland cement, fly ash, cement kiln dust, hydrated lime, bitumen, activated carbon*
6. *Handling of nonhomogeneous materials*

Other Cost Considerations:

Bench/pilot testing, personal protective equipment (PPE), backfill excavated area.

1998 by ECHOS. All rights reserved.

Solidification/Stabilization

Assembly	Description	Unit	Unit Cost by Safety Level A	B	C	D	E
	Capital Costs						
17 03 0220	910, 1.25 CY, Wheel Loader	HOUR	130.20	104.06	87.23	61.63	55.86
17 03 0221	916, 1.5 CY, Wheel Loader	HOUR	114.32	90.83	76.64	53.69	47.92
17 03 0222	926, 2.0 CY, Wheel Loader	HOUR	154.30	124.14	103.30	73.68	67.91
17 03 0223	950, 3.0 CY, Wheel Loader	HOUR	180.10	145.64	120.50	86.58	80.81
17 03 0224	966, 4.0 CY, Wheel Loader	HOUR	211.58	171.88	141.48	102.32	96.55
17 03 0225	980, 5.25 CY, Wheel Loader	HOUR	298.84	244.38	199.68	145.79	139.74
17 03 0226	988, 7.0 CY, Wheel Loader	HOUR	384.90	316.10	257.05	188.82	182.77
17 03 0227	992, 13.5 CY, Wheel Loader	HOUR	648.92	536.11	433.06	320.83	314.78
17 03 0235	Crawler-mounted, 5.5 CY, Koehring 1266, Hydraulic Excavator	HOUR	491.70	404.92	328.27	242.08	235.80
17 03 0285	12 CY, Dump Truck	HOUR	119.55	95.96	80.05	56.91	52.15
17 03 0431	580K, 1.0 CY, Backhoe with Front-end Loader	HOUR	127.72	101.78	85.60	60.23	54.18
17 03 0432	Bobcat with Backhoe	MONTH	1,500	1,500	1,500	1,500	1,500
18 02 0320	4" Structural Slab on Grade	SF	6.45	5.45	4.98	4.00	3.67
18 02 0321	6" Structural Slab on Grade	SF	6.98	5.95	5.47	4.48	4.14
18 02 0322	8" Structural Slab on Grade	SF	9.75	8.38	7.71	6.38	5.95
18 02 0323	10" Structural Slab on Grade	SF	10.56	9.13	8.43	7.04	6.58
18 02 0324	12" Structural Slab on Grade	SF	11.57	10.04	9.30	7.82	7.34
18 02 0341	6" Unreinforced Slab on Grade	SF	4.87	4.14	3.79	3.08	2.85
18 02 0342	8" Unreinforced Slab on Grade	SF	6.45	5.54	5.07	4.19	3.93
18 02 0343	10" Unreinforced Slab on Grade	SF	6.97	6.04	5.56	4.66	4.38
18 02 0344	12" Unreinforced Slab on Grade	SF	7.64	6.67	6.16	5.22	4.93
19 04 0401	550 Gallon, Stainless Steel Aboveground Wastewater Holding Tank, Rental	MONTH	320.65	320.65	320.65	320.65	320.65
19 04 0408	21,000 Gallon Steel, Open Top, Tank Rental	MONTH	1,124	1,124	1,124	1,124	1,124
20 99 9901	200 KW Diesel Generator, 3 Phase	EACH	48,691	46,436	45,434	43,253	42,477
33 01 0462	Truck Scale Rental	MONTH	2,862	2,862	2,862	2,862	2,862
33 10 0118	R60 Rough Terrain Forklift, 6,000 Lb @ 24" LC	HOUR	114.98	91.38	77.08	54.02	48.25
33 13 1120	Pretreatment System Operational Labor Cost	DAY	217.57	217.57	217.57	217.57	217.57
33 13 2401	Weekly Rental, Portable Drum Shredder, 60 - 100 Drums/Hour	WEEK	11,408	11,408	11,408	11,408	11,408
33 13 2402	Daily Rental, Portable Drum Shredder, 60 - 100 Drums/Hour	DAY	2,282	2,282	2,282	2,282	2,282
33 13 2403	Monthly Rental, Portable Drum Shredder, 60 - 100 Drums/Hour	MONTH	45,633	45,633	45,633	45,633	45,633

1998 by ECHOS. All rights reserved

Solidification/Stabilization

Assembly	Description	Unit	Unit Cost by Safety Level A	B	C	D	E
	Capital Costs						
33 13 2404	Shredder Mobilize/DeMobilize	EACH	1,700	1,700	1,700	1,700	1,700
33 13 2405	Electric Shredder, Minimum Rental Charge, 50 - 75 Tons/Hour	EACH	41,750	41,750	41,750	41,750	41,750
33 13 2406	Electric Shredder, Additional Monthly Rental, 50 - 75 Tons/Hour	MONTH	18,875	18,875	18,875	18,875	18,875
33 13 2407	Electric Shredder, Purchase, 35 Tons/Hour Output	EACH	271,283	271,283	271,283	271,283	271,283
33 13 2408	Portable Drum Shredder, 60 - 100 Drums/Hour Output	EACH	251,900	251,900	251,900	251,900	251,900
33 15 0401	Cement Kiln Dust (Bulk)	TON	5.26	5.26	5.26	5.26	5.26
33 15 0402	Fly Ash, Class C (Bulk)	TON	14.84	14.84	14.84	14.84	14.84
33 15 0403	Fly Ash, Class F (Bulk)	TON	15.64	15.64	15.64	15.64	15.64
33 15 0404	Bottom Ash (Bulk)	TON	2.83	2.83	2.83	2.83	2.83
33 15 0405	Portland Cement Type I (Bulk)	TON	77.73	77.73	77.73	77.73	77.73
33 15 0406	Portland Cement Type K (Bulk)	TON	103.88	103.88	103.88	103.88	103.88
33 15 0407	Lime (Crushed Limestone) Bulk	TON	5.30	5.30	5.30	5.30	5.30
33 15 0408	Urrichem Proprietary Additive (Bulk)	TON	980.00	980.00	980.00	980.00	980.00
33 15 0409	Bitumen (Bulk)	TON	40.28	40.28	40.28	40.28	40.28
33 15 0410	Chloranan Proprietary Additive (Bulk)	TON	636.00	636.00	636.00	636.00	636.00
33 15 0411	P4 Proprietary Reagent (Bulk)	TON	725.00	725.00	725.00	725.00	725.00
33 15 0412	P27 Proprietary Reagent (Bulk)	TON	275.00	275.00	275.00	275.00	275.00
33 15 0413	Activated Carbon, Granular or Powdered Form (Bulk)	TON	3,604	3,604	3,604	3,604	3,604
33 15 0414	Sodium Silicate (Bulk)	TON	275.60	275.60	275.60	275.60	275.60
33 15 0415	Tank Truck Standby Time for Solidification/Stabilization Unit	HOUR	21.80	18.16	14.53	10.90	10.90
33 15 0417	7.5 HP Sludge Pump, 1" Maximum Particle Size, Rental	MONTH	950.00	950.00	950.00	950.00	950.00
33 15 0418	1 CY Plywood Boxes	EACH	79.07	66.27	60.70	48.32	43.83
33 15 0420	Operational Labor for Process Equipment	HOUR	101.08	77.92	68.00	45.61	37.40
33 15 0421	Bulk Chemical Transport (40,000 Lb Truckload)	EACH	2,350	2,350	2,350	2,350	2,350
33 15 0422	2 CY Mixing System	MONTH	1,577	1,577	1,577	1,577	1,577
33 15 0423	10 CY Mixing System	MONTH	4,690	4,690	4,690	4,690	4,690
33 15 0425	High-pressure Water System for 2 CY Waste Mixer, 28 Gallon	EACH	2,866	2,866	2,866	2,866	2,866
33 15 0426	Nonpressurized Water System for 10 CY Waste Mixer	EACH	1,948	1,948	1,948	1,948	1,948
33 15 0427	Barrel Loader for 2 CY Waste Mixer	EACH	5,485	5,485	5,485	5,485	5,485
33 15 0428	Belt Feeder for 10 CY Mixer, 13' Long	EACH	9,947	9,947	9,947	9,947	9,947
33 15 0429	50 CY/Hour Decumulative Batch Plant, 8 CY Capacity	EACH	185,553	185,553	185,553	185,553	185,553

1998 by ECHOS. All rights reserved

Solidification/Stabilization

Assembly	Description	Unit	Unit Cost by Safety Level A	B	C	D	E
	Capital Costs						
33 15 0430	Dust Collection with 2 HP Blower and Controls	EACH	7,240	7,240	7,240	7,240	7,240
33 15 0431	Water Pump, 3" Self-priming with 10 HP Motor	EACH	7,314	7,314	7,314	7,314	7,314
33 15 0432	Radial Stacking Conveyor with 2 CY Hopper, 55' Long	EACH	48,961	48,961	48,961	48,961	48,961
33 15 0433	5 CY Waste Mixer	MONTH	1,542	1,542	1,542	1,542	1,542
33 15 0434	15 CY Waste Mixer	MONTH	4,666	4,666	4,666	4,666	4,666
33 15 0435	Solidification/Stabilization Ancillary Equipment	EACH	7,100	7,100	7,100	7,100	7,100
33 15 0436	Mobilize/DeMobilize of Solidification/Stabilization Equipment	LS	32,851	25,323	22,100	14,823	12,155
33 15 0437	Maintenance of Solidification/Stabilization Unit	YEAR	14,354	11,064	9,656	6,477	5,311
33 17 0816	3,000 PSI Pressure Washer, 4.5 GPM	EACH	8,868	8,868	8,868	8,868	8,868
33 17 0823	Operation of Pressure Washer, Including Water, Soap, Electricity, Labor	HOUR	79.38	63.31	56.43	40.91	35.21
33 18 8401	41.5' Automatic Conveyor, 45 FPM, Horizontal 24" Belt, Center Drive	EACH	8,054	7,271	6,882	6,121	5,877
33 18 8402	61.5' Automatic Conveyor, 45 FPM, Horizontal 24" Belt, Center Drive	EACH	10,682	9,637	9,119	8,105	7,779
33 18 8403	34' Automatic Inclined Conveyor, 25 Degree, 24" Belt, Loader/End Idler	EACH	9,284	8,239	7,721	6,707	6,381
33 18 8501	Refuse Bottom Hopper, Aluminized Steel, 18" Diameter	EACH	1,334	1,251	1,215	1,135	1,105
33 18 8601	4' x 12' Single-tray Vibrating Screening Unit, with Motor & Accessories	EACH	16,360	15,705	15,362	14,725	14,531
33 18 8602	5' x 16' Double-tray Vibrating Screening Unit, with Motor & Accessories	EACH	25,858	25,105	24,711	23,979	23,757
33 18 8603	6' x 20' Triple-tray Vibrating Screening Unit, with Motor & Accessories	EACH	32,164	30,853	30,168	28,894	28,506
33 18 8604	7' x 24' Triple-tray Vibrating Screening Unit, with Motor & Accessories	EACH	39,668	37,805	36,831	35,020	34,469
33 19 0109	Dredging Sludge < 1,000' to Loading Area	DAY	3,048	2,457	2,040	1,459	1,351
33 19 0110	Dredging Sludge > 1,000' to Loading Area	DAY	4,339	3,533	2,901	2,105	1,997
33 19 9921	DOT Steel Drum, 55 Gallon	EACH	65.19	65.19	65.19	65.19	65.19
33 26 0502	2" Polyethylene (SDR 21) Piping	LF	11.71	9.24	8.18	5.79	4.91
33 26 0503	3" Polyethylene (SDR 21) Piping	LF	12.96	10.32	9.12	6.56	5.67
33 26 0504	4" Polyethylene (SDR 21) Piping	LF	16.79	13.35	11.80	8.48	7.31
33 26 0507	10" Polyethylene (SDR 21) Piping	LF	47.02	38.71	34.53	26.46	23.90
33 29 0103	50 GPM, 100' Head, 3 HP, Centrifugal Pump	EACH	2,658	2,500	2,432	2,279	2,223
33 29 0106	100 GPM, 150' Head, 7.5 HP, Centrifugal Pump	EACH	3,419	3,191	3,093	2,873	2,793
33 29 0109	10 HP, 250 GPM, Centrifugal Pump	EACH	3,032	2,805	2,707	2,487	2,407

1998 by ECHOS. All rights reserved

Solidification/Stabilization

Assembly	Description	Unit	Unit Cost by Safety Level A	B	C	D	
	Capital Costs						
33 29 0110	15 HP, 300 GPM, Centrifugal Pump	EACH	3,441	3,160	3,040	2,770	2,67(
33 29 0116	100 HP, 3000 GPM, Centrifugal Pump	EACH	15,575	14,046	13,338	11,857	11,34
33 33 0117	Hydrated Lime, Powdered, Bulk	TON	97.55	97.55	97.54	97.54	97.5
33 42 0101	Electrical Charge	KWH	0.06	0.06	0.06	0.06	0.0
33 42 0201	Diesel Fuel	GAL	1.31	1.31	1.31	1.31	1.3
33 42 0301	Water	KGAL	8.39	8.39	8.39	8.39	8.3

1996 by ECHOS. All rights

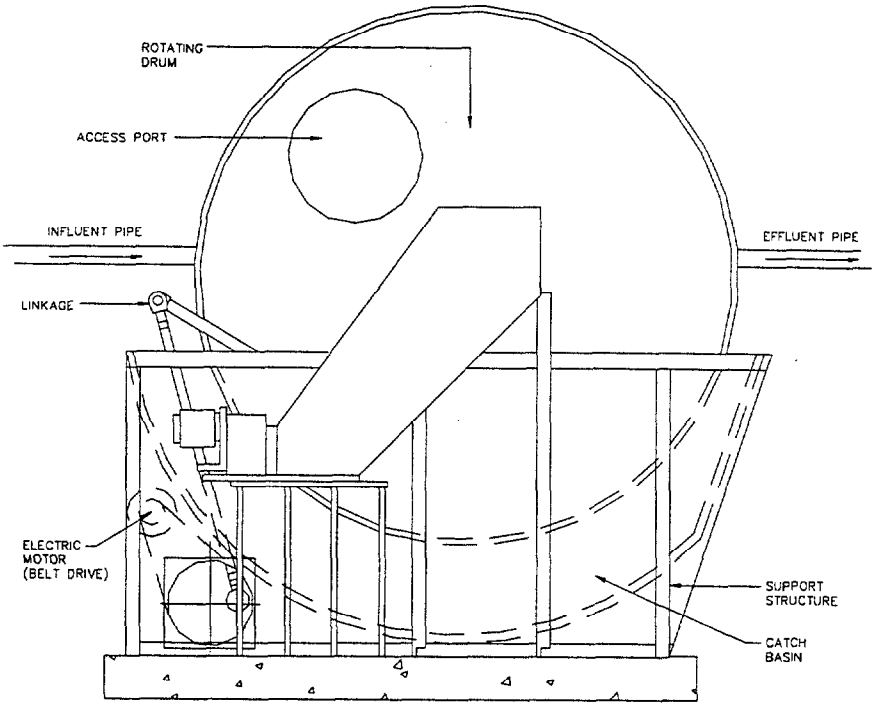

PROFILE

General:

Dewatering is a physical unit operation which reduces the moisture content of slurries or sludges to enable handling and to prepare the materials for final treatment and/or disposal. Though there are other methods for dewatering, the costs presented here are focused on vacuum filtration.

Typical Treatment Train:

Pretreatment, sampling and analysis, disposal of dewatered cake.

Common Cost Components:

1. *Vacuum filtration unit*
2. *Structural slab*
3. *Chemical conditioners*
4. *Electrical usage*
5. *Piping*
6. *Operations and Maintenance*

Other Cost Considerations:

Electrical distribution, chemical storage building, conditioning tank, conveyor.

1996 by ECHOS. All rights reserved

Dewatering (Sludge)

Assembly	Description	Unit	Unit Cost by Safety Level A	B	C	D	E
	Capital Costs						
18 02 0322	8" Structural Slab on Grade	SF	9.75	8.38	7.71	6.38	5.95
18 02 0324	12" Structural Slab on Grade	SF	11.57	10.04	9.30	7.82	7.34
19 01 0202	1", Class 200, PVC Piping	LF	7.48	5.84	5.07	3.48	2.93
19 01 0204	2", Class 200, PVC Piping	LF	8.86	6.96	6.07	4.23	3.60
19 01 0206	3", Class 200, PVC Piping	LF	11.81	9.34	8.20	5.80	4.98
19 01 0207	4", Class 200, PVC Piping	LF	12.33	9.86	8.72	6.32	5.50
19 01 0208	6", Class 200, PVC Piping	LF	14.95	12.20	10.93	8.27	7.36
19 01 0212	8", Class 150, PVC Piping	LF	18.36	15.27	13.84	10.85	9.82
19 01 0214	12", Class 150, PVC Piping	LF	28.75	24.63	22.72	18.73	17.36
33 13 1101	3.1 SF of Nominal Filtering Area, 1' Drum Diameter, 4 HP	EACH	28,381	27,914	27,715	27,264	27,098
33 13 1102	6.2 SF of Nominal Filtering Area, 2' Drum Diameter, 6 HP	EACH	33,387	32,920	32,721	32,270	32,104
33 13 1103	12.6 SF of Nominal Filtering Area, 2' Drum Diameter, 9 HP	EACH	37,763	37,141	36,875	36,274	36,054
33 13 1104	18.8 SF of Nominal Filtering Area, 2' Drum Diameter, 9 HP	EACH	42,115	41,494	41,227	40,626	40,406
33 13 1105	25.1 SF of Nominal Filtering Area, 2' Drum Diameter, 11 HP	EACH	47,148	46,370	46,037	45,286	45,010
33 13 1106	28.3 SF of Nominal Filtering Area, 3' Drum Diameter, 11 HP	EACH	49,402	48,624	48,291	47,540	47,264
33 13 1107	37.7 SF of Nominal Filtering Area, 3' Drum Diameter, 13 HP	EACH	58,106	57,329	56,996	56,244	55,969
33 13 1108	56.5 SF of Nominal Filtering Area, 3' Drum Diameter, 24 HP	EACH	66,402	65,469	65,069	64,167	63,837
33 13 1109	75.4 SF of Nominal Filtering Area, 6' Drum Diameter, 33 HP	EACH	73,082	72,149	71,750	70,848	70,517
33 13 1110	94.2 SF of Nominal Filtering Area, 6' Drum Diameter, 38 HP	EACH	78,479	77,313	76,813	75,686	75,273
33 13 1111	113.0 SF of Nominal Filtering Area, 6' Drum Diameter, 49 HP	EACH	87,159	85,993	85,494	84,366	83,953
33 13 1112	170.0 SF of Nominal Filtering Area, 6' Drum Diameter, 60 HP	EACH	133,036	131,613	131,004	129,630	129,125
33 13 1113	226.0 SF of Nominal Filtering Area, 6' Drum Diameter, 79 HP	EACH	159,377	157,954	157,345	155,971	155,466
33 13 1114	302.0 SF of Nominal Filtering Area, 8' Drum Diameter, 99 HP	EACH	179,876	177,995	177,189	175,371	174,704
33 13 1115	402.0 SF of Nominal Filtering Area, 8' Drum Diameter, 120 HP	EACH	200,153	198,071	197,179	195,166	194,428
33 13 1116	503.0 SF of Nominal Filtering Area, 8' Drum Diameter, 140 HP	EACH	228,539	226,206	225,208	222,953	222,126
33 13 1131	Operation and Maintenance of Vacuum Filtration Unit	HOUR	401.10	330.31	293.30	224.48	203.55
33 13 1950	25' x 6" Flexible Stainless Steel High-pressure Hose	EACH	1,288	1,239	1,217	1,170	1,153
33 26 0101	1" Carbon Steel Piping	LF	6.46	5.28	4.77	3.63	3.21
33 26 0102	2" Carbon Steel Piping	LF	10.50	8.72	7.95	6.23	5.60
33 26 0103	3" Carbon Steel Piping	LF	18.02	15.20	13.99	11.26	10.26

1998 by ECHOS. All rights reserved

Dewatering (Sludge)

Assembly	Description	Unit	Unit Cost by Safety Level A	B	C	D	
	Capital Costs						
33 26 0104	4" Carbon Steel Piping	LF	23.20	19.86	18.43	15.21	14.02
33 26 0105	6" Carbon Steel Piping	LF	36.37	30.24	27.46	21.52	19.44
33 26 0106	8" Carbon Steel Piping	LF	40.77	34.08	31.15	24.68	22.36
33 26 0108	12" Carbon Steel Piping	LF	75.72	65.62	61.18	51.41	47.89
33 26 0201	1" Stainless Steel Piping, Schedule 40, Threaded	LF	18.67	16.12	15.03	12.56	11.65
33 26 0202	2" Stainless Steel Piping, Schedule 40, Threaded	LF	33.47	29.21	27.39	23.28	21.77
33 26 0203	3" Stainless Steel Piping, Schedule 40, Threaded	LF	57.00	50.61	47.88	41.71	39.45
33 26 0204	4" Stainless Steel Piping, Schedule 40, Threaded	LF	80.15	71.72	68.12	59.98	57.00
33 26 0205	6" Stainless Steel Piping, Schedule 10, Type 316	LF	78.58	70.01	66.14	57.84	54.94
33 26 0206	8" Stainless Steel Piping, Schedule 40, Welded	LF	197.22	183.32	176.89	163.42	158.80
33 26 0209	12" Stainless Steel Piping, Schedule 40, Welded	LF	312.43	295.44	287.57	271.12	265.47
33 26 0301	1 1/2" Polypropylene Pipe Including Fittings	LF	7.56	6.11	5.48	4.08	3.57
33 26 0302	2" Polypropylene Pipe Including Fittings	LF	8.79	7.16	6.46	4.88	4.30
33 26 0303	3" Polypropylene Pipe Including Fittings	LF	13.80	11.43	10.42	8.13	7.29
33 26 0304	4" Polypropylene Pipe Including Fittings	LF	18.36	15.28	13.96	10.99	9.90
33 26 0702	50' x 6" Brown Gum Rubber, Chemical-resistant, Flexible Hose	EACH	1,123	1,038	1,001	918.34	888.04
33 26 0703	50' X 6" Nitrile Rubber, Low pH Res, Flex Hose	EA	0.00	0.00	0.00	0.00	0.00
33 33 0114	Quicklime, 1/4" Nominal Granules, Bulk Quantity	TON	96.49	96.49	96.48	96.48	96.47
33 33 0115	Quicklime, 3/4" Nominal Granules, Bulk Quantity	TON	96.49	96.49	96.48	96.48	96.47
33 33 0116	Quicklime, Combination 1/4" & 3/4" Granules, Bulk Quantity	TON	96.49	96.49	96.48	96.48	96.47
33 33 0117	Hydrated Lime, Powdered, Bulk	TON	97.55	97.55	97.54	97.54	97.53
33 33 0118	Hydrated Lime, Powdered, 50 Lb Bag	EACH	25.76	21.23	18.49	14.06	12.94
33 33 0121	Ferric Chloride, Bulk	TON	241.18	241.18	241.17	241.17	241.16
33 42 0101	Electrical Charge	KWH	0.06	0.06	0.06	0.06	0.06
	Operations & Maintenance						
33 13 1131	Operation and Maintenance of Vacuum Filtration Unit	HOUR	401.10	330.31	293.30	224.48	203.55
33 33 0114	Quicklime, 1/4" Nominal Granules, Bulk Quantity	TON	96.49	96.49	96.48	96.48	96.47
33 33 0115	Quicklime, 3/4" Nominal Granules, Bulk Quantity	TON	96.49	96.49	96.48	96.48	96.47
33 33 0116	Quicklime, Combination 1/4" & 3/4" Granules, Bulk Quantity	TON	96.49	96.49	96.48	96.48	96.47
33 33 0117	Hydrated Lime, Powdered, Bulk	TON	97.55	97.55	97.54	97.54	97.53
33 33 0118	Hydrated Lime, Powdered, 50 Lb Bag	EACH	25.76	21.23	18.49	14.06	12.94
33 33 0121	Ferric Chloride, Bulk	TON	241.18	241.18	241.17	241.17	241.16
33 42 0101	Electrical Charge	KWH	0.06	0.06	0.06	0.06	0.06

1998 by ECHOS. All rights reserved

Alternative 2: Limited Action

ASSUMPTIONS:

1. Long-term Monitoring:

- Sediment chemistry (PCBs, PAHs, metals, Simultaneously Extracted Metals/Acid Volatile Sulfides (SEM/AVS)); 8 samples plus 2 QC samples
- Elutriate chemistry (PCBs, PAHs, metals; 8 samples plus 2 QC samples
- Biota chemistry 8 samples for lobster and bivalves, plus 2 QC samples each (PCBs, PAHs, metals);
- Toxicity Amphipod; 10 samples
- Toxicity Arabacia; 10 samples

Labor: 1 event/year.

- Sediment sampling: Sample collection with equipment and crew = approximately $485/sample. Collection of 10 sediment and 10 elutriate samples = $9,700 (QC samples collected at no additional cost)
- Biota sampling : Sample collection with equipment and crew = approximately $1043/sample. Collection of 20 samples = $20,860
- Proj. mgmt/coord. ≈ 30 hours/year @ $80/hr (w/O&P) = $2,400
- Annual: add $500 M&IE; ODCs & supplies @ $300; & shipping @ $300.
- Data Validation $5,040.
- Report prep. $9,315.

Total Labor ≅ $48,415 annually for years 1-30

Estimated analytical costs:

- Sediment chemistry (PCBs, PAHs, metals, SEM/AVS) $1537/sample @10 samples/yr = $15,370
- Elutriate chemistry (PCBs, PAHs, metals) $1367/sample @10 samples/yr = $13,670
- Biota chemistry (PCBs, PAHs, metals) @ $1367/sample @ 20 samples/yr = $13,670
- Toxicity Amphipod @ $863/ sample @ 10 samples/yr = $8,630
- Toxicity Arabacia @ $662/ sample @ 10 samples/yr = $6,620

Total Analytical ≅ $57,960 annually for years 1-30

2. Access Restriction and Institutional Control

- Installation of six buoys USCG fifth class: steel buoys 8' tall and 2' diameter warning "cans" purchase and install at $2,000 each for a total of 12,000.
- Purchase of two warning placards 6'x6' stating access restriction and installation at outermost point of Piers 1 and 2, at $1,200 each or $2,400.
- Maintenance of buoy moorings and tethers of $200 each buoy every two years for 30 years or $18,000.
- Maintenance of buoys at $500 each buoy every 6 years for 30 years or $15,000.

Derecktor Shipyard/Coddington Cove FS
Alternative 2 - Limited Action
Newport, Rhode Island
Present Worth Analysis

PRESENT WORTH ANALYSIS

YEAR	PRESENT WORTH FACTOR	CAPITAL COSTS	O & M COSTS	5-YEAR COSTS	PRESENT WORTH
0	1.000	$19,800			$19,800
1	0.935		$107,355		$100,332
2	0.873		$108,555		$94,816
3	0.816		$107,355		$87,634
4	0.763		$108,555		$82,816
5	0.713		$107,355	$21,500	$91,872
6	0.666		$111,555		$74,334
7	0.623		$107,355		$66,855
8	0.582		$108,555		$63,180
9	0.544		$107,355		$58,394
10	0.508		$108,555	$21,500	$66,113
11	0.475		$107,355		$51,004
12	0.444		$111,555		$49,532
13	0.415		$107,355		$44,549
14	0.388		$108,555		$42,100
15	0.362		$107,355	$21,500	$46,703
16	0.339		$108,555		$36,771
17	0.317		$107,355		$33,986
18	0.296		$111,555		$33,005
19	0.277		$107,355		$29,685
20	0.258		$108,555	$21,500	$33,609
21	0.242		$107,355		$25,928
22	0.226		$108,555		$24,502
23	0.211		$107,355		$22,646
24	0.197		$111,555		$21,993
25	0.184		$107,355	$21,500	$23,741
26	0.172		$108,555		$18,693
27	0.161		$107,355		$17,277
28	0.150		$108,555		$16,327
29	0.141		$107,355		$15,090
30	0.131		$111,555	$21,500	$17,479
		TOTAL PRESENT WORTH =			$1,410,764

Discount rate of 7% per OSWER Directive No. 9355.3-20, June 25, 1993

Alternative 3A: Limited Removal and Off-Base Disposal

ASSUMPTIONS:

CAPITAL COST ITEMS:

1. Pre-Design Investigation

- Sediment sampling to further determine the grain size and nature of the sediments and to delineate lateral and vertical extent of contaminants exceeding the PRGs. Assume 34 soil borings at an average 5-foot depth with associated analytical costs for PCBs, PAHs, Metals and geotechnical testing. Mob./demob. @ $13,500. Sample collection @ $800 each or $27,200. Analytical @ $130/sample for 136 screening analysis samples, and 20% split samples for laboratory analysis at $465 or $30,328. Data validation $3,427. Reporting @ $12,465. Oversight and management @ $12,500. Total costs = $99,400.

- Bench-scale treatability study to determine method to dewater dredged sediment and necessary treatment for the water generated as a result of dewatering of these dredged sediments. Assume the study will include preparation of a work plan detailing the planned study; sample collection; shipment of sample to Pittsburgh, PA for testing; treatability testing to be conducted by one person for approximately one week (to include solids separation, metals precipitation, and carbon absorption); analysis of associated water samples for metals, PAHs, and PCBs; and preparation of a report summarizing the results of the testing. Total cost is estimated at $50,000.

- Review of existing information and additional field investigaitons to identify and evaluate habitats and wetlands that will or may be impacted by the alternative. Review of existing information - $5,000, biologists inspection of the seafloor to be dredged (five dives for each area to be dredged) - $15,300, evaluation report - $10,200. Total cost is estimated at $30,500.

2. Long-term Monitoring, Stations 18 and 30 only:

- Sediment chemistry (PCBs, PAHs, metals, Simultaneously Extracted Metals/Acid Volatile Sulfides (SEM/AVS)); 2 samples plus 1 QC sample
- Biota chemistry 2 samples each of lobster and hard clam (PCBs, PAHs, metals);

Labor: 1 event/year.

- Sediment sampling: Sample collection with equipment and crew = approximately $485/sample. Collection of 2 samples = $970 (QC samples collected at no additional cost)
- Biota sampling : Sample collection with equipment and crew = approximately $1043/sample. Collection of 4 samples = $4,172
- Proj. mgmt/coord. ≈ 30 hours/year @ $80/hr (w/O&P) = $2,400
- Annual: add $200 M&IE; ODCs & supplies @ $300; & shipping @ $300.
- Data Validation $3,024.
- Report prep. $4,658.

Total Labor ≅ $16,024 annually for years 1-30

Estimated analytical costs:

- Sediment chemistry (PCBs, PAHs, metals, SEM/AVS) $1537/sample @2 samples/yr = $3,074
- Biota chemistry (PCBs, PAHs, metals) @ $1367/sample @ 4 samples/yr = $5,468

Total Analytical ≅ $8,542 annually for years 1-30

<5% of the volume of dredged materials will be larger than 6 inches and reused and that chemical testing of the screened materials prior to moving off-site will not be required.

- An 8-hour work day is assumed for all construction activities. However, due to accessibility, it is assumed that one hour per day will be required to maintain and mobilize equipment and secure the work areas and remove equipment from each work site (net production = 7 hours per day). An analysis of overtime labor versus daily equipment rates should be performed at the design phase to determine if cost-benefits exist by working overtime.

- It is assumed that Pier 1 at Coddington Cove will be used as a materials, dewatering, and office staging area at no cost. Dewatered dredge spoils will be staged at Pier 1 pending transport to the disposal facility.

- It is assumed that 30 confirmation samples will be collected during the dredging operation to verify the all contaminated sediments exceeding the PRGs is removed. Samples will be analyzed for PCBs, metal, ~~pesticides,~~ and PAHs. Analytical costs are assumed to be $1,400/sample including collection and shipping costs.

- Water quality testing will be performed daily during dredging and cap installation activities. It assumed that two samples will be collected daily from outside of the silt curtain work area and one sample will be collected from the dewatering waste stream. Samples will be analyzed for PCBs, PAHs, metals, and total suspended solids (TSS)~~.~~

7. 5-year reviews at 200 LOE @ $100/hr. Approx. $1,500 ODCs. Total = $21,500 per event
Reviews to occur in years 5, 10, 15, 20, 25, and 30.

O&M COST ITEMS

1. Access Restriction and Institutional Controls

- RIDEM fisheries enforcement visits after notification of trespass and suspicious activity by NETC police: 2 events per year requiring 2 officers, one boat and miscellaneous equipment for one hour on each visit: $240 per visit or $480 per year.
- Description of area on permit paperwork distributed with collection permits, posting at local water access points and fishing piers annually for 30 years at $500 per year.
- Maintenance of buoy moorings and tethers of $200 each buoy every two years for 30 years.
- Maintenance of buoys at $500 each buoy every 6 years for 30 years.

DERECKTOR SHIPYARD/CODDINGTON COVE FEASIBILITY STUDY NEWPORT, RI
ALT-3A - LIMITED DREDGING AND OFF-BASE DISPOSAL (DREDGING AREAS 2,3,20,27,28,29)
NAVY CLEAN CTO 302

9.3) RCRA D Landfill	48,326	TN	85.00	0.00	0.00	0.00	4,107,744	0	0	0	4,107,744	Vendor Info.
9.4) Miscellaneous Solid Waste	200	TN	85.00	0.00	0.00	0.00	17,000	0	0	0	17,000	Vendor Info.

	Total Cost ($) Sub.	Mat.	Labor	Equip.	Total Direct Cost ($)	Comments
TOTAL	8,769,968	71,500	266,058	36,400	9,160,926	
Direct Cost Adjustment Factors						
Safety Level D Multiplier (5% of labor and equipment, for non-Lev. C activities)	0	0	13,303	1,820	15,123	
Safety Level C Multiplier (25% of labor and equipment, as listed)	0	0	0	0	0	
Site & Industrial Health & Safety Monitoring (4% of labor and equipment)	0	0	10,642	1,456	12,098	
Subtotal Direct Costs	8,769,968	71,500	279,360	38,220	9,188,147	
Indirect Cost Adjustment Factors						
Labor Overhead @ 250% (for field mgmt. & home office, only)	0	0	381,870	0	381,870	
Field Construction Labor Overhead @ 75%	0	0	84,982	0	84,982	
Subcontract Overhead @ 10%	876,997	0	0	0	876,997	
Tax on Materials @ 5%	0	3,575	0	0	3,575	
G & A @ 10% (on labor, equip., & matl's.)	0	7,150	27,936	3,822	38,908	
Subtotal Direct and Indirect Costs	9,646,965	82,225	774,149	42,042	10,574,479	
Cost Adjustment Factors						
City/Location Cost Adjustment Factor @ 7% (ref. 1)					740,214	
Adjusted Direct and Indirect Costs	9,646,965	82,225	774,149	42,042	11,314,692	
Engineering @ 6 % of total direct and indirect					678,882	
Prime Contractor Fee @ 10% of Total Adjusted Cost					1,131,469	
Total Costs					13,125,043	
Contingency @ 30% of Total Cost					3,937,513	
TOTAL ESTIMATED COST					17,062,556	

References used for cost estimates:

1) Means Heavy Construction Cost Data, 1998, 12th Annual Edition, R.S. Means Co., Inc., Kingston, MA
2) Echos Environmental Remediation Unit Cost , 1998, 4th Annual Edition, Delta Technologies Group, Inc., Englewood, CO
3) Echos Environmental Remediation Assemblies Cost , 1998, 4th Annual Edition, Delta Technologies Group, Inc., Englewood, CO
4) Historical data based on competitive bids submitted by subcontractors at this or other sites.
5) Personal communication with General Chemical Corporation, 8/20/98.
6) Personal communication with Enco Dredging/Waste Management Inc., 8/26/98.

Notes:
RCRA C Proposed Disposal Site: CWM Model City, NY.
RCRA D Proposed Disposal Site: BFI Fall River, MA.
EA = Each
LS = Lump Sum
HR = Hour
SF = Square Foot
LF = Linear Foot
CY = Cubic Yard
MO = Month
TN = Ton

Alternative 3B: ~~Limited~~Hot Spot -Removal and Off-Base Disposal

ASSUMPTIONS:

CAPITAL COST ITEMS:

1. Pre-Design Investigation

- Soil borings/cores to identify hot spots of sediment contamination, and to determine the grain size and nature of the sediments. Assume 26~~78~~ soil borings at an average 5-foot depth with associated analytical costs for PCBs, PAHs, Metals and geotechnical testing. Mob./demob. @ $13,500. Boring advancement @ $700 each or $18,200 ~~62,400~~. Analytical @ $130/sample for 104 ~~312~~ screening analysis samples ($13,520), and 20% split samples for laboratory analysis at $465 each or $9,765 ~~69,576~~. Data validation $2,620 ~~7,862~~. Reporting @ $12,465 ~~17,715~~. Oversight and management @ $12,500 ~~25,000~~. Total costs = $82,570 ~~190,013~~.

- Bench-scale treatability study to determine method to dewater dredged sediment and necessary treatment for the water generated as a result of dewatering of these dredged sediments. Assume the study will include preparation of a work plan detailing the planned study; sample collection; shipment of sample to Pittsburgh, PA for testing; treatability testing to be conducted by one person for approximately one week (to include solids separation, metals precipitation, and carbon absorption); analysis of associated water samples for metals, PAHs, and PCBs; and preparation of a report summarizing the results of the testing. Total cost is estimated at $50,000.

- Review of existing information and additional field investigaitons to identify and evaluate habitats and wetlands that will or may be impacted by the alternative. Review of existing information - $5,000, biologists inspection of the seafloor to be dredged (five dives for each area to be dredged) - $12,750, evaluation report - $8,500. Total cost is estimated at $26,250.

2. Long-term Monitoring, Intermediate Risk Stations 18, 20, and 30:

- Sediment chemistry (PCBs, PAHs, metals, Simultaneously Extracted Metals/Acid Volatile Sulfides (SEM/AVS)); 3 samples plus 1 QC sample
- Biota chemistry 3 samples each of lobster and clam (PCBs, PAHs, metals);

Labor: 1 event/year.

- Sediment sampling: Sample collection with equipment and crew = approximately $485/sample. Collection of 3 samples = $1,455 (QC samples collected at no additional cost)
- Biota sampling : Sample collection with equipment and crew = approximately $1043/sample. Collection of six samples = $6258
- Proj. mgmt/coord. ≈ 30 hours/year @ $80/hr (w/O&P) = $2,400
- Annual: add $500 M&IE; ODCs & supplies @ $300; & shipping @ $300.
- Data Validation $4,536.
- Report prep. $4,658.

Total Labor ≅ $20,407 annually for years 1-30

Estimated analytical costs:

- Sediment chemistry (PCBs, PAHs, metals, SEM/AVS) $1537/sample @3 samples/yr = $4,611
- Biota chemistry (PCBs, PAHs, metals) @ $1367/sample @ 6 samples/yr = $8,202

Total Analytical ≅ $12,183 annually for years 1-30

will be rinsed of fine-grained sediment and stockpiled for fill materials elsewhere. It is assumed that <5% of the volume of dredged materials will be larger than 6 inches and reused and that chemical testing of the screened materials prior to moving off-site will not be required.

- An 8-hour work day is assumed for all construction activities. However, due to accessibility, it is assumed that one hour per day will be required to maintain and mobilize equipment and to secure the work areas and remove equipment from each work site (net production = 7 hours per day). An analysis of overtime labor versus daily equipment rates should be performed at the design phase to determine if cost-benefits exist by working overtime.

- It is assumed that Pier 1 at Coddington Cove will be used as a materials, dewatering, and office staging area at no cost. Dewatered dredge spoils will be staged at Pier 1 pending transport to the disposal facility.

- It is assumed that 15 confirmation samples will be collected during the dredging operation to verify the all contaminated sediments exceeding the targets is removed. Samples will be analyzed for PCBs, metal, pesticides, and PAHs. Analytical costs for confirmation analysis are assumed to be $1,400/sample including collection and shipping costs.

- Water quality testing will be performed daily during dredging and cap installation activities. It assumed that two samples will be collected daily from outside of the silt curtain work area and one sample will be collected from the dewatering waste stream. Samples will be analyzed for PCBs, PAHs, metals, and total suspended solids (TSS).

7. 5-year reviews at 200 LOE @ $100/hr. Approx. $1,500 ODCs. Total = $21,500 per event
Reviews to occur in years 5, 10, 15, 20, 25, and 30.

O&M COST ITEMS

1. Access Restriction and Institutional Controls

- RIDEM fisheries enforcement visits after notification of trespass and suspicious activity by NETC police: 2 events per year requiring 2 officers, one boat and miscellaneous equipment for one hour on each visit: $240 per visit or $480 per year.
- Description of area on permit paperwork distributed with collection permits, posting at local water access points and fishing piers annually for 30 years at $500 per year.
- Maintenance of buoy moorings and tethers of $200 each buoy every two years for 30 years.
- Maintenance of buoys at $500 each buoy every 6 years for 30 years.

DERECKTOR SHIPYARD/CODDINGTON COVE FEASIBILITY STUDY NEWPORT, RI
ALT-3B - LIMITED DREDGING AND OFF-BASE DISPOSAL (DREDGING AREA 3)
NAVY CLEAN CTO 302

		Total Cost ($) Sub.	Mat.	Labor	Equip.	Total Direct Cost ($)	Comments
	TOTAL	7,746,096	65,550	231,239	32,900	8,077,484	
Direct Cost Adjustment Factors							
Safety Level D Multiplier (5% of labor and equipment, for non-Lev. C activities)		0	0	11,562	1,645	13,207	
Safety Level C Multiplier (25% of labor and equipment, as listed)		0	0	0	0	0	
Site & Industrial Health & Safety Monitoring (4% of labor and equipment)		0	0	9,250	1,316	10,566	
	Subtotal Direct Costs	7,746,096	65,550	242,801	34,545	8,101,257	
Indirect Cost Adjustment Factors							
Labor Overhead @ 250% (for field mgmt. & home office, only)		0	0	318,225	0	318,225	
Field Construction Labor Overhead @ 75%		0	0	77,961	0	77,961	
Subcontract Overhead @ 10%		774,610	0	0	0	774,610	
Tax on Materials @ 5%		0	3,278	0	0	3,278	
G & A @ 10% (on labor, equip., & matl's.)		0	6,555	24,280	3,455	34,290	
	Subtotal Direct and Indirect Costs	8,520,705	75,383	663,267	38,000	9,309,620	
Cost Adjustment Factors							
City/Location Cost Adjustment Factor @ 7% (ref. 1)						651,673	
	Adjusted Direct and Indirect Costs	8,520,705	75,383	663,267	38,000	9,961,293	
Engineering @ 6 % of total direct and indirect						597,678	
Prime Contractor Fee @ 10% of Total Adjusted Cost						996,129	
	Total Costs					11,555,100	
Contingency @ 30% of Total Cost						3,466,530	
	TOTAL ESTIMATED COST					15,021,631	

References used for cost estimates:

1) Means Heavy Construction Cost Data, 1998, 12th Annual Edition, R.S. Means Co., Inc., Kingston, MA
2) Echos Environmental Remediation Unit Cost , 1998, 4th Annual Edition, Delta Technologies Group, Inc., Englewood, CO
3) Echos Environmental Remediation Assemblies Cost , 1998, 4th Annual Edition, Delta Technologies Group, Inc., Englewood, CO
4) Historical data based on competitive bids submitted by subcontractors at this or other sites.
5) Personal communication with General Chemical Corporation, 8/20/98.
6) Personal communication with Enco Dredging/Waste Management Inc., 8/26/98.

Notes:
RCRA C Proposed Disposal Site: CWM Model City, NY.
RCRA D Proposed Disposal Site: BFI Fall River, MA.
EA = Each
LS = Lump Sum
HR = Hour
SF = Square Foot
LF = Linear Foot
CY = Cubic Yard
MO = Month
TN = Ton

Alternative 4: Complete Removal and Off-Base Disposal

ASSUMPTIONS:

CAPITAL COST ITEMS:

1. Pre-Design Investigation

- Sediment sampling to further determine the grain size and nature of the sediments and to delineate lateral and vertical extent of contaminants exceeding the PRGs. Assume 52~~34~~ soil borings at an average 5-foot depth with associated analytical costs for PCBs, PAHs, Metals and geotechnical testing. Mob./demob. @ $13,500. Sample collection @ $800 each or $41,600~~27,200~~. Analytical @ $130/sample for 208~~136~~ screening analysis samples (~~$27,040~~), and 20% split samples for laboratory analysis at $465 ~~or~~($19,530)~~ $30,328~~. Data validation $5,241~~3,427~~. Reporting @ $12,465. Oversight and management @ $12,500. Total costs = ~~$99,400~~131,876.

- Bench-scale treatability study to determine method to dewater dredged sediment and necessary treatment for the water generated as a result of dewatering of these dredged sediments. Assume the study will include preparation of a work plan detailing the planned study; sample collection; shipment of sample to Pittsburgh, PA for testing; treatability testing to be conducted by one person for approximately one week (to include solids separation, metals precipitation, and carbon absorption); analysis of associated water samples for metals, PAHs, and PCBs; and preparation of a report summarizing the results of the testing. Total cost is estimated at $50,000.

- Review of existing information and additional field investigaitons to identify and evaluate habitats and wetlands that will or may be impacted by the alternative. Review of existing information - $5,000, biologists inspection of the seafloor to be dredged (five dives for each area to be dredged) - $25,500, evaluation report - $17,000. Total cost is estimated at $47,500.

2. Mobilization/Demobilization includes providing office trailers, temporary utilities and sanitary facilities, delivery and removal of major construction equipment, and providing all other facilities and materials needed by the management staff.

3. It is assumed that subgrade preparation will be required prior to dredging the contaminated sediments. Miscellaneous debris (cable, conduit, piping, etc.) will be removed from the sediments with diver assistance and cranes.

4. Erosion controls will be provided to reduce the migration of sediments during the dredging operations by means of a silt boom. The silt boom will be anchored around the perimeter of the dredge area.

5. This alternative requires the dredging of all sediments exceeding with contaminant concentrations in excess of the recommended PRGS (areas 2, 3, 18, 20, 27, 28, 29, and 30). Sediment present that has COCs in excess of these recommended PRGs range in depth between 0.5 and 4 feet. The area is estimated by current data to be 1,806,720 square feet, and may include 50,994 cubic yards of sediment.

- Preparation, maintenance, and removal of the Pier 1 staging area was estimated at a lump sum of $11,000, which includes 2 laborers and a backhoe for 10 days and misc. materials.

-The actual dewatering and wastewater treatment process will be determined based on a bench scale laboratory study using samples of the site sediments. The dewatering process will likely include the following: screening of the dredged material to remove material greater than 0.25 inches;

DERECKTOR SHIPYARD/CODDINGTON COVE FEASIBILITY STUDY NEWPORT, RI
ALT-4 - COMPLETE DREDGING AND OFF-BASE DISPOSAL
NAVY CLEAN CTO 302

			Unit Cost ($)				Total Cost ($)				Total Direct Cost ($)	Comments
Item	Qty	Unit	Sub.	Mat.	Labor	Equip.	Sub.	Mat.	Labor	Equip.		
PRE-DESIGN INVESTIGATION												
1) Additional soils boring and analyses	1	LS	99,400.00			0.00	99,400	0	0	0	99,400	See assumptions
2) Bench Scale Treatability Study	1	LS	50,000.00			0.00	50,000	0	0	0	50,000	See assumptions
3) Wetlands & Habitat Evaluation	1	LS	47,500.00			0.00	47,500	0	0	0	47,500	See assumptions
MOBILIZATION/DEMOBILIZATION												
1) Office Trailer (1 ea)	9	MO	400.00	0.00	0.00	0.00	3,600	0	0	0	3,600	Historical data
2) Storage Trailer (1 ea)	6	MO	100.00	0.00	0.00	0.00	600	0	0	0	600	Historical data
3) Portable Communication Equipment	8	SETS	400.00	0.00	0.00	0.00	3,200	0	0	0	3,200	Historical data
4) Equipment Mobilization/Demobilization	1	LS	25,000.00	0.00	0.00	0.00	25,000	0	0	0	25,000	Historical data
5) Site Utility Hook-ups (elec., phone, etc.)	1	LS	3,000.00	0.00	0.00	0.00	3,000	0	0	0	3,000	Historical data
6) Site Utilities	9	MO	4,000.00	0.00	0.00	0.00	36,000	0	0	0	36,000	Historical data
7) 3 Pick-up Truck (rental)	9	MO	2,850.00	450.00	0.00	0.00	25,650	4,050	0	0	29,700	Historical data
8) Certification/Close-out Reports	1	EA	7,000.00	2,000.00	15,000.00	3,000.00	7,000	2,000	15,000	3,000	27,000	Historical data
PERSONNEL AND EQUIP. DECON. FACILITIES AND SERVICES												
1) Personnel Decon. Trailer	9	MO	500.00	0.00	200.00	0.00	4,500	0	1,800	0	6,300	Vendor catalog
2) PPE rolloff cont.	9	MO	500.00	0.00	0.00	0.00	4,500	0	0	0	4,500	Historical data
SITE MANAGEMENT STAFFING												
1) Site manager	1,800	HR	0.00	0.00	35.86	0.00	0	0	64,548	0	64,548	Historical data
2) Site supervisor/foreman	1,800	HR	0.00	0.00	30.00	0.00	0	0	54,000	0	54,000	Historical data
3) Site safety officer	1,800	HR	0.00	0.00	25.00	0.00	0	0	45,000	0	45,000	Historical data
HOME OFFICE PROJECT MANAGEMENT AND SUPPORT												
1) Project manager	360	HR	0.00	0.00	45.00	0.00	0	0	16,200	0	16,200	Historical data
2) Project administrator	270	HR	0.00	0.00	30.00	0.00	0	0	8,100	0	8,100	Historical data
3) Health and Safety director	90	HR	0.00	0.00	35.00	0.00	0	0	3,150	0	3,150	Historical data
4) Procurement/subcontracting	900	HR	0.00	0.00	30.00	0.00	0	0	27,000	0	27,000	Historical data
5) Clerical support	900	HR	0.00	0.00	12.36	0.00	0	0	11,124	0	11,124	Historical data
DREDGING/WATER TREATMENT												
1) Erosion control, silt boom	5,000	LF	0.00	10.00	4.00	4.00	0	50,000	20,000	20,000	90,000	Historical data
2) Mob/Demob (barge and pier based equip.)	1	LS	167,600.00	0.00	0.00	0.00	167,600	0	0	0	167,600	Vendor Info.
3) Prep., maint., and removal of staging area	1	LS	0.00	1,000.00	7,000.00	3,000.00	0	1,000	7,000	3,000	11,000	Vendor Info.
4) Dredge sediments	50,994	CY	43.00	0.00	1.66	0.00	2,192,742	0	84,650	0	2,277,392	Vendor Info.
5) Treatment of dredge water	120	DAY	4,500.00	0.00	0.00	0.00	540,000	0	0	0	540,000	Vendor Info.
6) Sediment confirmation testing	40	EA	1,400.00	0.00	0.00	0.00	56,000	0	0	0	56,000	Historical data
7) Water Quality Testing	120	DAY	3,600.00	50.00	200.00	150.00	432,000	6,000	24,000	18,000	480,000	Historical data
8) Stabilization of Sediment	120	DAY	2,500.00	0.00	0.00	0.00	300,000	0	0	0	300,000	Vendor Info.
9) Disposal/Transport												
9.1) Analysis of Sediment Prior to Transport	102	EA	700.00	0.00	0.00	0.00	71,400	0	0	0	71,400	Vendor Info.
9.2) RCRA C Landfill	18,358	TN	140.00	0.00	0.00	0.00	2,570,098	0	0	0	2,570,098	Vendor Info.

Derecktor Shipyard/Coddington Cove FS
Alternative 4 - Complete Removal and Off-Base Disposal
Newport, Rhode Island
Present Worth Analysis

PRESENT WORTH ANALYSIS

YEAR	PRESENT WORTH FACTOR	CAPITAL COSTS	O & M COSTS	5-YEAR COSTS	PRESENT WORTH
0	1.000	$24,950,977			$24,950,977
1	0.935				$0
2	0.873				$0
3	0.816				$0
4	0.763				$0
5	0.713				$0
6	0.666				$0
7	0.623				$0
8	0.582				$0
9	0.544				$0
10	0.508				$0
11	0.475				$0
12	0.444				$0
13	0.415				$0
14	0.388				$0
15	0.362				$0
16	0.339				$0
17	0.317				$0
18	0.296				$0
19	0.277				$0
20	0.258				$0
21	0.242				$0
22	0.226				$0
23	0.211				$0
24	0.197				$0
25	0.184				$0
26	0.172				$0
27	0.161				$0
28	0.150				$0
29	0.141				$0
30	0.131				$0
		TOTAL PRESENT WORTH =			$24,950,977

Discount rate of 7% per OSWER Directive No. 9355.3-20, June 25, 1993