9/26/97-01291

NORFOLK NAVAL BASE
Norfolk, Virginia

FINAL
WORK PLAN
for Groundwater Remediation
Q-Area Drum Storage Yard

Contract No.
N62470-93-D-3032

Delivery Order 0073

OHM Project 17260

Prepared by:

OHM Remediation
Services Corp.

September 26, 1997

9/26/97-01291

FINAL
WORKPLAN
FOR
GROUNDWATER REMEDIATION
Q-AREA DRUM STORAGE YARD
NORFOLK NAVAL BASE
NORFOLK, VIRGINIA

Prepared for:

DEPARTMENT OF THE NAVY
Contract No. N62470-93-D-3032
Atlantic Division
Naval Facilities Engineering Command
1510 Gilbert Street
Norfolk, Virginia 23511-2699

Prepared by:

OHM Remediation Services Corp.
Northern Region
200 Horizon Center Boulevard
Trenton, New Jersey 08691-1904

Reviewed by:

Philip A. Tully, P.E.
Senior Project Manager

Richard A. Jasaitis, C.P.G., P.G.
Technical Task Leader

for
John P. Franz, P.E.
Program Manager

September 24, 1997
Delivery Order 073
OHM Project 17260

TABLE OF CONTENTS

1.0 INTRODUCTION 1-1

1.1 PROJECT BACKGROUND 1-1

TABLE 1-1 GROUNDWATER REMEDIATION GOALS 1-2

1.2 REMEDIAL OBJECTIVES 1-2
1.3 PERMIT REQUIREMENTS 1-2

2.0 AIR SPARGING/SOIL VAPOR EXTRACTION DESIGN 2-1

2.1 AS/SVE DESIGN BASIS 2-1
2.2 AS/SVE EQUIPMENT DESCRIPTION 2-1
2.3 AIR SPARGE AND SOIL VAPOR EXTRACTION WELLS 2-2
2.4 MONITORING WELLS 2-2

3.0 SITE CONSTRUCTION ACTIVITIES 3-1

3.1 PRE-CONSTRUCTION WORK PLANS 3-1
3.2 PRE-CONSTRUCTION MEETING 3-1
3.3 FINAL DESIGN ENGINEERING 3-1
3.4 PURCHASING AND PROCUREMENT 3-1
3.5 PRE-CONSTRUCTION LAYOUT AND STAKING 3-1
3.6 MOBILIZATION OF CONSTRUCTION EQUIPMENT AND PERSONNEL 3-1
3.7 SITE SETUP ACTIVITIES 3-1
3.8 WELL INSTALLATION 3-2
3.9 SAWCUT ASPHALT/CONCRETE PAVING AND TRENCH INSTALLATION 3-3
3.10 FOUNDATION CONSTRUCTION 3-4
3.11 MECHANICAL INSTALLATION 3-4
3.12 EROSION CONTROL 3-4
3.13 AIR SPARGE AND SVE PIPING INSTALLATION 3-4
3.14 ELECTRICAL DUCTBANK 3-5
3.15 SYSTEM STARTUP 3-5
3.16 OFF-SITE LAB ANALYSIS 3-5
3.17 WASTE DISPOSAL SAMPLING/SOIL AND WATER DISPOSAL 3-5
3.18 SYSTEM OPERATION AND MAINTENANCE 3-6
3.19 DEMOBILIZE FACILITIES AND EQUIPMENT 3-8

4.0 DECONTAMINATION PROCEDURES 4-1

4.1 GENERAL DISCUSSION 4-1
4.2 HEALTH AND SAFETY 4-1
4.3 DECONTAMINATION OF DRILLING AND CONSTRUCTION EQUIPMENT 4-1
4.4 DECONTAMINATION SUPPORT PERSONNEL 4-2

5.0 SITE RESTORATION 5-1

5.1 DISCONNECTION OF TELEPHONE AND UTILITIES 5-1
5.2 REPAIR ACTIVITIES 5-1
5.3 CLOSE-OUT OF SUBCONTRACTORS AND VENDORS 5-1

6.0 POST-CONSTRUCTION SUBMITTALS 6-1

APPENDICES

APPENDIX A	SHOP DRAWINGS
APPENDIX B	ENGINEERING CALCULATIONS AND CATALOG CUT SHEETS
APPENDIX C	FINAL HEALTH AND SAFETY PLAN
APPENDIX D	FINAL QUALITY CONTROL PLAN
APPENDIX E	FINAL FIELD SAMPLING AND QUALITY ASSURANCE PLAN
APPENDIX F	FINAL ENVIRONMENTAL PROTECTION PLAN
APPENDIX G	FINAL TRANSPORTATION AND DISPOSAL PLAN

1.0 INTRODUCTION

This document is the workplan for Delivery Order No. 073, OHM project No. 17260, for groundwater remediation at Q-Area Drum Storage Yard (QADSY), located at the Naval Operations Base, Norfolk, Virginia, under the terms of Contract No. N62470-93-D-3032. Construction of the remediation system will be in accordance with the preliminary design specifications and drawings provided by Baker Environmental, Inc., and the construction details described in this Workplan.

1.1 PROJECT BACKGROUND

The QADSY is located on the Sewells Point Naval Complex in the northern portion of the Naval Base (Appendix A, Drawing No. 1). The QADSY and surrounding areas were created in the early 1950s from dredged materials taken from Willoughby Bay. The site was used to store up to tens of thousands of drums containing various fluids, including chlorinated solvents and petroleum products. Poor drum handling practices have resulted in groundwater contamination beneath the site.

The QADSY is a relatively flat open area with an average elevation of 10 feet above mean sea level. The site is underlain by unconsolidated sediments consisting of silty sand with shell fragments, and locally discontinuous clay beds. Below the fill is the Lynhaven member within the Tabb Formation which consists of fine to coarse sand grading to sandy clayey silt. The average thickness of the Lynhaven member is 20 feet. The Yorktown Formation underlies the Tabb Formation and ranges in thickness of 300 to 400 feet.

The shallow sediments at the site are part of the Columbia Aquifer which is unconfined and is not used for potable water. Available groundwater data indicates that the shallow water table is approximately 7 to 8 feet below ground surface (bgs) and flows northwest towards the Elizabeth River. The Yorktown aquifer underlies the Colombia Aquifer and is characterized by coarse sand, gravel, and shell beds. The major water bearing zones within the Yorktown aquifer are present from 50 to 150 feet bgs. The Yorktown aquifer is generally under confined conditions and is separated from the watertable aquifer by a 20 to 40 foot thick confining layer of silty/sandy clay.

There have been numerous site investigations completed at the site since 1982, to determine environmental conditions. The Remedial Investigation and Feasibility Study (RI/FS) was conducted by Environmental Science & Engineering, Inc. (ESE) between 1990 and 1993, and the draft RI/FS report was completed in April 1994. The Basis of Design Report, including project specifications, was submitted to the Navy by Baker Environmental, Inc. (Baker) in November 1995. OHM conducted a field design test and additional plume delineation investigations in 1996 and in 1997 as a supplement to the RI/FS. OHM submitted the Field Design Test Report to the Navy in December, 1996, and the Plume Delineation Report in May, 1997. These investigations revealed that in two separate locations of the site, designated as Area of Concern 1 (AOC-1) and Area of Concern 2 (AOC-2), the groundwater is impacted by volatile organic compounds (VOCs), metals, and total petroleum hydrocarbons (TPH). VOCs include tetrachloroethene (PCE), trichloroethene (TCE), 1,1,1-trichloroethane (TCA), 1,2-dichloroethene (DCE), 1,1-DCE, Vinyl chloride (VC) and acetone. The lateral and vertical extent of impacted groundwater at AOC-1 and AOC-2 was defined in the Basis of Design and RI/FS Reports by ESE.

AOC-1 is located in the central portion of the QADSY site and is primarily impacted with PCE. This area also contains low levels of vinyl chloride (VC) which were detected in groundwater at 15 and 25 feet bgs during the OHM investigation. The highest concentrations of PCE were reported at the 15-foot depth interval in the final RI/FS report (ESE, 1996). PCE concentrations of 4,800 mg/L and 3,700 mg/L were detected in groundwater samples collected from SW-2-1 and SW-2-2, respectively.

AOC-2 is located near Piers 11 and 12, along the Elizabeth River. Based on the RI/FS Report, the primary contaminant of concern in this area is TCE, with the highest concentrations detected are at 35 feet bgs. TCE concentrations of 1,371 mg/L and 866 mg/L were detected in groundwater samples collected from HP-15-35 and HP-11-35, respectively. The lateral extent of both plumes was defined based on the final remediation goals set forth in the project specifications and results from the remedial investigation. The areal extent of impacted groundwater, and the AS/SVE system layout are depicted in Appendix A, Drawing Nos. 2 and No. 3, respectively.

1.2 REMEDIAL OBJECTIVES

The objective of the remedial action is to remediate groundwater contaminated by volatile organics as indicated above. The groundwater remediation goals for the site have been proposed based on the human health risk assessment prepared by ESE in the Draft Final RI/FS, and are presented in Table 1-1.

TABLE 1-1
GROUNDWATER REMEDIATION GOALS

Contaminant	Remedial Goal Objectives for Groundwater (ug/L)[1]
Tetrachloroethene (PCE)	60
Trichloroethene (TCE)	49
1,1-Dichloroethene (DCE)	0.378
Carbon Tetrachloride	2.73
Chloroform	11
Vinyl Chloride	<1
Total Petroleum Hydrocarbons (TPH)[2]	1000

Notes:

1) Remediation Goals for groundwater were developed by ESE, Inc. and are based on excess human risk ($1x10^{-6}$) due to the inhalation of vapors from groundwater by a future worker (ESE, 1995).

2) Groundwater cleanup goal for TPH based on VDEQ water quality standards for groundwater ug/L - micrograms per liter

The Basis of Design document prepared by Baker Environmental Inc., stated that Air Sparging/Soil Vapor Extraction (AS/SVE) technologies have been selected for the remediation of contaminated groundwater at both AOC-1 and AOC-2. The pilot test conducted by OHM confirmed the remedial technology and yielded additional design information. The proposed AS/SVE well placement strategy at AOC-1 and AOC-2 is designed to remediate groundwater at the source areas and to intercept and control groundwater contaminant migration in the downgradient direction.

1.3 PERMIT REQUIREMENTS

The active recovery system will generate two waste streams (water and vapor), however, neither will require discharge permits. Water will be generated in small amounts, primarily as condensate in the process equipment. This water will be drained from the system, and will be stored in a containment area, sampled, and appropriately disposed of within a 90 day period. For the system vapor discharge, loading calculations from the pilot test indicate that the SVE vapor offgas will not exceed the 25 tons/year total VOCs or 10 tons/year TCE limits. Therefore, the offgas can be vented directly to the atmosphere. During start-up and initial operation, vapor concentrations will be monitored to confirm the vapor loading rates under actual conditions.

2.0 AIR SPARGING/SOIL VAPOR EXTRACTION DESIGN

The air sparging (AS) process involves the injection of air into the water table aquifer. The air forms bubbles within the aquifer and by this method, comes into contact with the dissolved contaminants in the groundwater. This aeration of the water strips the dissolved contaminants from the liquid phase into the vapor phase. Soil vapor extraction (SVE) is used to capture the volatilized contaminants as they migrate vertically into the unsaturated zone.

2.1 AS/SVE DESIGN BASIS

Results of the pilot tests (OHM, 1996) indicated that the effective radius of sparging is approximately 25 to 30 feet, and the soil vapor extraction radius of influence is approximately 50 to 75 feet in each area. The sparging and extraction well points are spaced such that they have overlapping zones of influence to effectively remediate the impacted areas and recover generated vapors.

Based on the extent of VOC-impacted groundwater delineated during the RI/FS, a total of 30 AS wells and 14 SVE wells are included in the system design at AOC-1 (Appendix A, Drawing No. 2). Both AS and SVE wells will be positioned throughout the plume to reduce the VOC concentrations in groundwater at the source area to below the remediation goals presented in Table 1-1. Monitoring wells, located both inside and outside the plume, will be utilized to evaluate the system performance.

A total of 20 AS wells and 10 SVE wells will be included in the system design at AOC-2 (Appendix A, Drawing No. 3). AS and SVE wells will be placed in a linear array downgradient and parallel to the plume and the Elizabeth River. This well configuration is intended to reduce VOC concentrations in groundwater and control migration of contaminants toward the Elizabeth River which is located downgradient of the plume. Strategically placed monitoring wells located adjacent to the AS/SVE system will be utilized in evaluating the system performance.

The AS/SVE wells and the MWs used during the pilot tests at both AOC-1 and AOC-2 will be incorporated into the total system design.

Based on the pilot test data, taking piping losses into account, SVE blowers and AS compressors were sized as detailed in Section 2.2. Operating pressures and flowrates observed during the pilot tests (as a function of soil permeability) were used to calculate the required equipment size. During the pilot test at AOC-1, an air sparging flowrate of 7 scfm at 20 psi produced a 30 foot ROI. An SVE flowrate of 168 scfm at 11 inches water column vacuum produced an ROI of 75 feet.

During the pilot test at AOC-2, an air sparging flowrate of 4 to 6 scfm at 22 psi produced a 30 foot ROI. An SVE flowrate of 168 scfm at 11 inches water column vacuum produced an ROI of 75 feet.

Engineering calculations, as well as equipment catalog cut sheets, are included in Appendix B.

2.2 AS/SVE EQUIPMENT DESCRIPTION

Based on the number of wells and the engineering design data described above, the air sparging compressor for each area of concern will be an oil-free rotary screw type capable of 210 acfm capacity at 100 (psi), with a motor rating of 25 horsepower (hp). The SVE blower for AOC-1 will be a positive displacement rotary lobe unit with 2,400 acfm flow capacity at 6 inches Hg vacuum and 35 hp. Both AOC-1 and AOC-2 will have their own blower and compressor, and each will be provided with air filters,

air/water separators, silencers, and appropriate flow monitoring gauges, sample ports, and operational temperature and safety interlocks. The SVE blower for AOC-2 will also be a positive displacement rotary lobe unit, capable of 1,700 acfm at 6 inches Hg, and 25 hp.

Air sparge piping will be constructed of HDPE for all lines below ground, and low carbon steel within the well vaults and above ground pipes. The SVE lines will be constructed of HPDE piping in the subsurface and low carbon steel piping above the concrete pad. Valving and other fittings constructed of compatible materials will be installed as detailed in the design drawings.

The exhaust vapor from the blower units will be monitored upon start-up to determine the need for offgas vapor treatment. Preliminary calculations based on pilot test vapor samples indicate that concentrations will not exceed state or federal air discharge criteria.

Typical equipment catalog cut-sheets are included in Appendix B. Process flow diagrams for AOC-1 and AOC-2 are shown in Appendix A, Drawing Nos. 4 and 5, respectively. Piping and instrumentation diagrams for AOC-1 and AOC-2 are shown in Appendix A, Drawing Nos. 6 and 7, respectively.

2.3 AIR SPARGE AND SOIL VAPOR EXTRACTION WELLS

Based on results from the OHM 1996 pilot study, SVE wells will be installed as vertical wells. The vertical wells will be constructed using four-inch diameter schedule 40 PVC, 20-slot well screen and riser pipe. SVE wells will be screened in the vadose zone only, from approximately three to five feet below ground surface. The bottom of the SVE well screen will be installed at least one foot above the seasonal high water table.

The air sparge wells will be installed to a depth of approximately 41 feet below ground surface and will be built with two-inch diameter, 20-slot screen and riser pipe constructed of schedule 40 PVC. The targeted, screened interval will be positioned from 39 to 41 feet bgs. The final depth of the air sparge wells will be determined by the Hydrogeologist, based on field conditions.

All air sparge wells will be completed in flush mount well vaults with casing tops fitted with a flowmeter, pressure indicator, and isolation valves. SVE wellhead piping will incorporate a vacuum measuring port, ball valve, and sample port.

2.4 MONITORING WELLS

A network of monitoring wells will be installed to monitor the performance and effectiveness of the groundwater remediation system. Air sparge monitoring wells and vapor probes will be installed to measure physical parameters to evaluate the mechanical performance of the AS/SVE systems. Compliance monitoring wells will be installed to evaluate the effectiveness of the remediation systems, based on contaminant concentrations in groundwater. Several new monitoring wells will be installed, and will be used in addition to the existing monitoring wells for compliance monitoring at AOC-1 and AOC-2.

Air sparge monitoring (ASM) wells will be constructed of two-inch diameter PVC materials, and will be screened from 30 to 40 feet BGS. The primary purpose of these wells is to collect physical measurements such as dissolved oxygen, vapor pressure, and water levels to monitor and evaluate the physical effects of the AS system. These wells may also be sampled for groundwater quality parameters, which may be useful for compliance monitoring.

Vapor probes (VP) will be constructed of two-inch diameter PVC materials, and will be screened from three to five feet BGS, entirely in the vadose zone. The purpose of these wells is to provide a vacuum

(pressure) measuring point in the vadose zone where the effects of the SVE system can be monitored for performance evaluation.

Compliance monitoring wells (CMW) will be constructed of two-inch diameter PVC materials, and will be screened at various depths within the saturated zone, as indicated on Drawings 2 and 3. The purpose of these wells is to provide a groundwater sampling point at which groundwater quality can be measured to assess contaminant concentration trends over time. RATIONALE FOR EACH WELL

Proposed locations for these well types are shown on Drawings 2 and 3 for AOC-1 and AOC-2, respectively. Typical well construction details are shown on Drawings 8 and 9.

+ TO ASSESS THE EFFECT OF SYSTEM OPERATIONS ON GW FLOW DIRECTION

3.0 SITE CONSTRUCTION ACTIVITIES

3.1 PRE-CONSTRUCTION WORK PLANS

Included in the appendix to the work plan are the following: Final Health and Safety Plan, Final Quality Control Plan, Final Sampling and Analyses Plan, Final Environmental Protection Plan, and Final Transportation and Disposal Plan. These plans are included as Appendices C through G, respectively.

3.2 PRE-CONSTRUCTION MEETING

Prior to mobilization, the OHM Regional Operations Manager, QA/QC Program Manager, Sr. Project Manager, and Site Superintendent, and the A&E Contractor will meet with the LANTDIV RPM and Naval Base ROICC for the preconstruction and mutual understanding meeting. This one-day meeting will review the scope, schedule, and budget for the project, and will be considered the kick-off meeting for the project.

3.3 FINAL DESIGN ENGINEERING

The final design engineering documents and drawings are included with this Work Plan.

3.4 PURCHASING AND PROCUREMENT

Prior to purchasing process equipment, construction materials, or subcontracting vendors which will provide equipment, materials, or services, OHM will review and prepare material and equipment data to submit to the QC manager. Technical evaluation of solicited bids will be performed by the OHM Technical Services Department. An engineer will be responsible for evaluating procurement issues relating to items such as process equipment, instrumentation, valves and piping, while a civil engineer will evaluate building materials, stone, fill, and paving. A hydrogeologist will review all materials and aspects related to well drilling and installation. When received at the site, all equipment, material, and completed services will be inspected to ensure the project specifications are satisfied, no damage has occurred during shipment, and that the received goods match the purchase order.

3.5 PRE-CONSTRUCTION LAYOUT AND STAKING

Prior to mobilization, the equipment pad locations, pipe trenches, and all wells will be staked out and marked. The laydown area, decontamination area, and work zones will also be identified and staked. Prior to performing any intrusive work activities, OHM will contact the ROICC for base assistance in locating subsurface utilities, performing a magnetic survey, and marking the underground utilities in the vicinity of the work. Independent subsurface utility locating subcontractors will also assist with utility mark-outs.

3.6 MOBILIZATION OF CONSTRUCTION EQUIPMENT AND PERSONNEL

Mobilization of OHM equipment and personnel will be from Richmond, Virginia or other facilities, depending on availability. Rental equipment will be mobilized from a local equipment rental vendor, if necessary.

3.7 SITE SETUP ACTIVITIES

OHM will setup the temporary facilities required for the project, including; office trailers, decontamination trailer, electrical and utility hook-ups, and the equipment decontamination pad. Work zones will be established and marked with high-visibility fencing, a storage tank will be staged for waste water, and a

fuel storage area with containment will be established. Signs will be posted throughout the site, identifying hazards, work areas, and general site rules. Erosion control measures will also be installed during this portion of the project. Refer to the Environmental Protection Plan (Appendix F) of this document for further details regarding erosion control.

3.8 WELL INSTALLATION

An OHM Hydrogeologist will supervise and direct the installation of all AS, SVE and monitoring wells. The wells will be constructed according to Sections 02902 and 02903 of the project specifications, and construction details from the design drawings. The subsurface lithology and well construction details will be documented on a separate log sheet for each well. The monitoring, AS and SVE wells will be located as indicated in Appendix A, Drawing Nos. 2 and 3, although some field adjustment may be necessary. For the AS and SVE wells, OHM will install the well service boxes (well vaults) after placement of the wells. The well service boxes will be installed in conjunction with the piping. The monitoring wells will be completed in traffic-rated flush mount manholes at the time of the well installation.

3.8.1 Monitoring Wells

A network of monitoring wells (MWs) will be installed at each area of concern in accordance with the project specifications. Wells will be hand-excavated with a post-hole digger or hand-auger to a depth of 5 feet below ground surface, due to the density of subsurface utilities. While drilling, soil samples will be collected from monitoring well boreholes to evaluate the heterogeneity of the subsurface soil. The soil will also be described by the OHM Hydrogeologist according to the Unified Soil Classification System (USCS) along with other physical properties of the soil.

The MWs will be installed by hollow stem auger (HSA) drilling methods. A wooden plug installed on the bottom of the augers may be used to control running sands while installing the wells. If necessary, potable water may be used to fill the augers, creating a pressure head to reduce the potential of running sands entering the augers. Once the lead auger has reached the target depth, the well screen (with bottom plug) and riser casing will be placed inside the augers. Both the screen and riser pipe will be constructed of schedule 40 PVC pipe. The screened interval will have 0.020-inch slotted (20-slot) openings. The filter pack (# 2 Morie sand or equivalent), will then be placed inside the augers, outside the screen and casing. As the filter pack is added, the augers will be slowly withdrawn from the borehole, ensuring the top of the filter pack remains above the bottom of the auger bit. The top of the filter pack will terminate one foot above the top of the screened interval, sealed with a minimum of two feet of bentonite pellets, then grouted to approximately one foot below ground surface with a portland-bentonite grout. Each monitoring well will be completed with a lockable well cap in a flush-mounted manhole.

Monitoring wells will be developed by mechanical surging and over-pumping. OHM estimates that 20 to 25 gallons of water will be removed from each monitoring well. Developing will continue until the groundwater removed from the well is visually sediment-free. Monitoring well construction details are illustrated in Appendix A, Drawing No. 9

3.8.2 Air Sparging Wells

A total of 30 air sparging wells will be installed in AOC-1, and 20 in AOC-2, in accordance with the project specifications. The first 5 feet will be hand-excavated with a post-hole digger or auger below ground surface, due to the density of subsurface utilities. While drilling, soil samples will be collected from air sparge boreholes to evaluate the heterogeneity of the subsurface soil. The soil will also be described by the OHM Hydrogeologist according to the Unified Soil Classification System (USCS) along with other physical properties of the soil.

The AS wells will be installed by HSA drilling methods, as described for the monitoring wells. Wells will be constructed of schedule 40 PVC pipe. The two-foot screened interval will have 0.020-inch slotted openings. The filter pack (# 2 Morie sand or equivalent), will then placed inside the augers, outside the screen and casing until the top of the filter pack is one foot above the top of the screened interval. A minimum of four feet of bentonite pellets will be placed above the filter pack as a well seal. The remaining annular space will be sealed to approximately four feet below ground surface with a portland-bentonite grout. The top two feet of the well will be temporarily filled with loose backfill soil or sand to facilitate well vault installation, and the lateral piping connections.

The filter pack of the AS wells will be developed by mechanical surging and over-pumping. OHM estimates that 25 gallons of water will be removed from each AS well. Each AS well will be considered properly developed when the water removed from the well is visually sediment-free. Construction details for the AS wells are represented in Appendix A, Drawing No. 8.

3.8.3 Soil Vapor Extraction Wells

A total of 14 vertical SVE wells will be installed in AOC-1, and 10 in AOC-2, in accordance with the project specification. To minimize water uptake and maximize vacuum influence, wells will be placed completely in the vadose zone.

The SVE wells will be hand-excavated with a post-hole digger or hand auger to a depth of 5 feet below ground surface, due to the density of subsurface utilities. Hollow stem auger (HSA) drilling methods will be used to enlarge the borehole to larger diameter, and desired depth to allow well installation. Borehole will be advanced to approximately one foot above the water table. The well screen and riser will be constructed of four-inch diameter, schedule 40 PVC. The well screen will have 20-slot openings. No. 2 Morie sand or equivalent will be used as a filter pack placed around the screen and the bottom one foot of casing. The remaining annular space will be sealed with bentonite pellets and a portland-bentonite grout. The top two feet of the well may be temporarily filled with loose soil or sand (instead of concrete) to facilitate well vault installation.

The construction details for the monitoring, AS and SVE wells will adhere to the project specifications and design drawings. However, due to the shallow depth to groundwater, and heterogeneous nature of the sediments, some of the dimensions of the wells shown in Appendix A Drawing No. 8 may require modification. Regarding the SVE wells, efforts will be made to maximize the screened interval, while ensuring the well screen does not intersect the water table.

Well development water and decontamination water will be temporarily placed in storage tanks. Drill cuttings will be temporarily stored in roll-off containers. These wastes will be sampled for disposal characterization as detailed in the Transportation and Disposal Plan (Appendix G).

3.9 SAWCUT ASPHALT /CONCRETE PAVING AND TRENCH INSTALLATION

Much of the wellfield piping network and well service boxes will be installed within existing asphalt and concrete pavement. To facilitate excavation and asphalt repair, OHM will use a walk-behind power saw to cut the asphalt two feet wider than the trench width. An excavator or backhoe will be used to remove the asphalt. Asphalt and concrete debris will be stockpiled separately from soil for possible recycling. All pavement removal and replacement operations will conform to the procedures in Section 02571 - "Pavement Removal and Replacement" of the project specifications.

A backhoe will be used to excavate the trenches for the carrier pipe from the wells to the equipment pad and the electrical lines from the selected transformer to the treatment pad. Excavated soil will be stockpiled along one side of the trench.

3.10 FOUNDATION CONSTRUCTION

Preparation for the concrete foundation for the equipment pad will be performed in accordance with Sections 03302 and 04200 of the project specifications.

After the asphalt pavement has been sawcut and removed, OHM will excavate approximately the first six inches of material from the entire area within the footprint of the equipment pad. Forms will be constructed with steel reinforcement within the forms. 4,000 psi concrete conforming to the requirements outlined in the project specifications will be used for the foundation. Concrete testing, including 28 day breaks, slump and air entrainment, will be performed in accordance with the specifications.

OHM will install the air sparge and extraction well piping up through the concrete pad floor of the concrete pad at AOC-1 and AOC-2, as shown in Appendix A, Drawing No. 9. Both pads will be reinforced with steel. All concrete placement and finishing will performed in accordance with Sections 03302 and 04200 of the project specifications. The remainder of the treatment equipment will be installed directly to the concrete surface at both areas.

3.11 MECHANICAL INSTALLATION

Equipment associated with the AS and SVE systems will be mounted, electrically wired, and piped by OHM personnel and subcontractors as per manufacturer's directions. AS and SVE units will be skid mounted and factory tested for proper operation. Piping manifolds will be constructed according to final design mechanical plans. Typical catalog cut sheets for the equipment is included in Appendix B.

3.12 EROSION CONTROL

Most excavation will be through asphalt and concrete paved surfaces. There is a low potential of erosion problems, however, erosion control measures will be implemented as stated in the Environmental Protection Plan (Appendix F).

3.13 AIR SPARGE AND SVE PIPING INSTALLATION

Trenches for the AS and SVE piping will be excavated to a depth of 3 feet below ground surface, and will be approximately 2 feet in width. OHM will use a backhoe to excavate the trench, however, OHM is aware of the potential for unmarked or unknown buried utilities. Following a utility search and mark-out, OHM will survey the areas to be excavated with a magnetometer. In areas of uncertainty or proximity to subsurface utilities, OHM will hand-dig the trenches.

OHM has designed the piping layout in the trenches to use the fewest joints and fittings possible, and to minimize or eliminate pipe "cross-overs". Refer to Appendix A, Drawing No. 8 for a typical trench cross-section.

The subsurface SVE piping will be constructed of high density polyethylene (HDPE) which will be a combination of coiled and straight-length materials. The advantage of using flexible HDPE piping is its availability in 200-foot rolls, ease of installation, and reduced number of joints.

These advantages will increase the production rate of the trenching pipe installation phase of this project. Unions for each length of HDPE pipe will be butt-fusion welded. Forty-foot sections of straight-length HDPE pipe will be used for the shorter pipe runs. Transitional fittings (flanges with proper gasket material) will be installed at locations where the HDPE material couples to either a PVC well, or the low carbon steel pipe.

Select fill will be placed in 8-inch loose lifts. Each lift will be compacted to a minimum dry density of 95% of standard proctor maximum dry density. The compaction testing will be performed as per Section 02220 of the project specifications.

3.14 ELECTRICAL DUCTBANK

A new electrical ductbank will be installed to provide power for each AS/SVE system. OHM will coordinate this installation with the Base electrical department, through the ROICC. Installation of the ductbank will be performed in accordance with all local building codes, and Section 16402 of the project specifications. OHM is presently discussing with the Navy alternate locations for electrical tie-in to existing base service. It is desired to locate a source of existing electrical service that will not require crossing Admiral Hughes Boulevard.

3.15 SYSTEM STARTUP

Following the installation of the AS/SVE system , and completion of all the site work, the treatment system will be started. During this period all the necessary flows and pressures will be monitored and adjusted to maximize the system efficiency. In addition, to effectively evaluate system performance, a round of groundwater samples will be collected and analyzed from the monitoring well network before the startup. These analytical results will provide baseline contamination concentrations to which post-startup sample results can be compared. Details regarding system start-up procedures are addressed in Section 3.19 "System Operation and Maintenance" of this Workplan.

3.16 OFF-SITE LAB ANALYSIS

Procedures for sampling and analyses are described in Appendix E, the Sampling and Analytical Plan.

3.17 WASTE DISPOSAL SAMPLING /SOIL AND WATER DISPOSAL

All waste generated during the project will undergo analytical testing prior to transportation and disposal off-site. Transportation and disposal will be performed in accordance with LANTDIV and VADEQ requirements. Upon receipt of analytical results, the OHM transportation and disposal coordinator will complete all waste profiles with analytical data and relay them to the designated disposal facility for their approval prior to the demobilization of the waste.

OHM will use a roll-off container to contain drill cuttings from the well installation. All staged soil will be sampled for waste characterization purposes following procedures described in the Sampling and Analysis Plan, (Appendix E). Impacted soil encountered during trenching and well installation activities will be disposed of at an approved facility. If not impacted, efforts will be made to re-use the soils on site. The specific facility for disposal will be based on waste characterization analytical results.

Water generated during the decontamination and well development process will be containerized in a storage tank, staged at an approved area of the site and labeled appropriately for identification purposes. The water will be sampled for waste characterization purposes following procedures described in the Sampling and Analysis Plan. The specific facility for disposal will depend on the analytical results.

Asphalt and concrete removed during construction activities will be stockpiled separately prior to being transported off-site to a qualified recycling or disposal facility.

3.18 SYSTEM OPERATION AND MAINTENANCE

Once the vacuum and injection systems are designed, constructed, and installed, the start-up will consist of turning on the AS/SVE units and opening the extraction and injection wells to the process stream. The startup period will be 5 days and will entail monitoring and fine tuning all the operational levels of the equipment for maximum efficiency. Vacuum and pressure gauges installed at various locations on the wells and manifold network will be monitored during start-up so that flows and pressures can be adjusted to be compatible with the system design. After the start-up period, the system will be left in continuous operation and checked via a basic telemetry system (auto-dialer) and weekly scheduled site visits. The auto-dialer system promptly notifies OHM that a system down condition has occurred so that an OHM Technician can be dispatched to the site immediately. In addition, the extraction blower and air sparge equipment must be serviced periodically. The air emission treatment system will require monitoring more frequently during initial system operation and less frequently as the remediation progresses.

As the remediation progresses, the injection and extraction process conditions can be adjusted to address specific areas of persistent contamination in order to maximize mass removal. The following system operating tasks will be conducted.

Prior to start-up, a draft Operations and Maintenance (O&M) Manual will be prepared by OHM. Once the operating conditions have stabilized, the O&M Manual will be finalized. Following the 180-day O&M period by OHM, OHM will provide training to the incumbent O&M contractor (or Navy personnel).

Start-up Testing

Vapor phase mass recovery and vapor treatment will occur at a higher rate initially and will decrease over time. In order to meet project objectives during startup and maintain appropriate operation and balanced flow throughout the system, frequent system monitoring is initially required. Maintenance and monitoring site visits will be daily initially, declining in frequency, until stabilization is achieved, estimated as four weeks of operation. At each site visit, process conditions will be checked including the following:

- Vacuum and injection pressures at individual wellheads
- Air flow rate through the system
- Water level in the air/water separator tank
- Blower and compressor performance (flow rate, pressure)
- Combined process VOC concentration at blower inlet (air sample)
- VOC concentration at the exhaust outlet
- Adjusting the flow rate at each extraction and injection well (if required)
- Checking and recording well water levels
- Monitoring wells for DNAPL accumulation
- Checking air filter condition
- Compliance discharge sampling
- Monitoring dissolved oxygen (DO) concentrations in AS monitoring wells

Long-Term Operation and Maintenance

Following the initial startup period, maintenance site visit frequency will be weekly. At this time, the system is expected to have reached a steady state, and process condition changes will be mainly the result of adjusting the remediation system for optimal long-term effectiveness. The same process conditions will be monitored as indicated above. Evaluation of the process monitoring data will be made, and adjustments to the system will be implemented to focus application of vacuum extraction and air injection where significant contamination reduction can be achieved.

Following the initial start-up phase, an OHM operator will maintain the system operation. This will include weekly sampling of air emissions to document system discharge. Monitoring of the water table aquifer will be conducted during each site visit. The system performance data to be tabulated includes:

- Date of site visit
- Depth-to-water, and DNAPL presence in each sparge well
- System flow rate
- Pressure and flow gauge readings at treatment system
- Comments

System operation and maintenance will include the following tasks:

- Maximum 24-hour response to repair any system malfunction or shutdown.
- Replacement of air filters, routine cleaning of fouled components, and routine inspection, adjustment, and/or replacement of belts.
- Disposal of all waste generated by the remediation system.
- Monthly sampling of discharge criteria for air emissions, as necessary.

Recovery System Monitoring

Recovery performance will be monitored to ensure efficient operation and to measure progress towards meeting the remedial objective. The following parameters will be measured and recorded:

- Vacuum and pressure at individual wellheads - This parameter will be monitored to confirm that vapor extraction and injection remains balanced throughout the system. Some variation of flow rates from well to well may be observed, but major variations may indicated the need for well redevelopment.
- Air flow rate at each well head - As the remediation progresses, adjustments will be made to the system to maximize the vapor recovery rate. Additionally, the air flow rate data will be utilized to confirm balanced flow conditions throughout the system.
- Blower and compressor performance (flow rate, pressure) - Blower and compressor performance will be monitored and compared to expected performance characteristics to ensure proper operation.

OHM uses the initial system design specifications and startup performance data as a "bench mark" against actual operating conditions. The key parameters include:

- Applied vacuum and pressure at individual well heads
- Applied vacuum and pressure for total system
- Observed air flow rate at individual well heads
- Observed air flow rate for total system
- Effective vacuum and injection radius of influence
- Observed vapor extraction rate
- DO concentrations in AS monitoring wells

These parameters will be tabulated to demonstrate that optimum system efficiency is being maintained. In addition, this will also enable maintenance items to be quickly identified and corrected.

3.19 DEMOBILIZE FACILITIES AND EQUIPMENT

OHM equipment and rental equipment will be demobilized as soon as there is no further need for it. The heavy equipment will be demobilized upon completion of construction activities. Each piece of equipment that has contacted contaminated media will have a final decontamination procedure performed prior to leaving the site. The temporary facilities, including the office trailer, will remain on site until startup of the system is completed. The final site restoration will also take place during the demobilization phase. All sedimentation and erosion controls will be removed, and damaged areas will be repaired to the satisfaction of the ROICC.

4.0 DECONTAMINATION PROCEDURES

This section describes the decontamination procedures that will be implemented by OHM during this project. Each specific operation included herein is described with the understanding that the Site Specific Health and Safety Plan (HASP) will be implemented during all activities, and that personal safety and health protection procedures take precedence over operational or scheduling considerations.

4.1 GENERAL DISCUSSION

The remedial action for QADSY involves the installation of soil vapor extraction and air injection wells, carrier piping, and a installation of a pre-built treatment plant. Decontamination activities will be required before, during, and prior to departure for the well drilling equipment, well development equipment, and construction equipment.

The following is a list of drilling, well development, and construction equipment which will be decontaminated by the OHM Team:

- Hollow stem augers and drill bits
- Drill rods and soil sampling devices
- All construction equipment which comes into contact with excavated soil
- All equipment which comes into contact with groundwater

All decontamination activities will be conducted utilizing 40 CFR Part 761, applicable state regulations and the HASP as guidelines. Demobilization of equipment will not occur until all the decontamination criteria, as set forth below, have been met completely.

4.2 HEALTH AND SAFETY

All decontamination and decommissioning activities will be conducted within the parameters of the HASP. In general, the level of personal protection during the decontamination procedures will be modified Level D. Whenever direct contact or the potential for liquid spraying exists (i.e. during use of high pressure washer or steam cleaner), Level C personal protection will be evaluated.

Additional personal safety concerns include the potential for physical impact during mobilization of heavy equipment. All regularly required personal protective equipment (PPE) including hard hat, steel-toed work boots and long sleeved shirts will be worn by every employee during all on-site activities. Short sleeve shirts may be worn during some construction activities where there is no concern for chemical exposure or dermal hazards. Furthermore, all personnel will be made aware of the physical and chemical hazards associated with the activities planned for each day prior to beginning work and as work progresses.

4.3 DECONTAMINATION OF DRILLING AND CONSTRUCTION EQUIPMENT

OHM will provide a decontamination pad for the decontamination of all drilling equipment used during the well installation and construction equipment during trench installation. The decontamination pad will be available for OHM and OHM subcontractors. The decontamination pad will remain fully operational and will be maintained in good working condition throughout well installation and construction activities. Decontamination procedures for drilling equipment (augers, drill rod, drill bits) will include steam cleaning using a high pressure steam cleaner. The drilling subcontractor will decontaminate drilling equipment before arriving at the site, between AOC-1 and AOC-2, and prior to departure. The construction

equipment will be decontaminated before arrival and prior to departure. Drilling equipment will also be decontaminated prior to installing each airsparge monitoring well and compliance monitoring well.

4.4 DECONTAMINATION SUPPORT PERSONNEL

The OHM Team will provide a hydrogeologist, engineer, or supervisor to oversee the procedures outlined herein, and to coordinate decontamination procedures with other contractors. Technicians will be provided to perform and document equipment decontamination and demobilization.

5.0 SITE RESTORATION

Once the construction phase of the remedial action has been completed, the OHM Team will initiate and complete site restoration activities prior to demobilization. These activities include:

- Disconnection of telephone and utilities
- Repair of concrete and asphalt surfaces

5.1 DISCONNECTION OF TELEPHONE AND UTILITIES

Upon approval from the Navy, OHM will disconnect and remove all lines and utilities not required during the O&M phase.

5.2 REPAIR ACTIVITIES

All paved surfaces that were disturbed during construction will be repaired according to the project specification. Landscaped areas (if damaged) will be restored to pre-construction conditions.

5.3 CLOSE-OUT OF SUBCONTRACTORS AND VENDORS

OHM will submit to the appropriate subcontractors and vendors a notice of complete contract termination. In addition, OHM will ensure proper final payment for supplies and services furnished.

6.0 POST-CONSTRUCTION SUBMITTALS

Upon completion of construction, OHM will submit a project closure report which will include:

- Introduction
- Summary of Action
- Final Health and Safety Report
- Summary of Record Documents
- Field Changes and Contract Modifications
- Final Operations & Maintenance Manual
- Complete Set of all Field Test and Laboratory Analytical Results
- Complete Set of all Data Validation Results
- Off-site Transportation and Treatment of Materials
- QC Summary Report

Additionally, two sets of as-built drawings and computer disks will be submitted upon completion of the project.

APPENDIX A
SHOP DRAWINGS

Index of Drawings:

1. Cover Sheet
2. Air Sparge/SVE Layout at AOC 1
3. Air Sparge/SVE Layout at AOC 2
4. Process Flow Diagram at AOC 1
5. Process Flow Diagram at AOC 2
6. Piping and Instrumentation Diagram AirSparge/SVE Layout at AOC 1
7. Piping and Instrumentation Diagram AirSparge/SVE Layout at AOC 2
8. Miscellaneous Details
9. Miscellaneous Details
10. General Notes/Legends/Abbreviations

APPENDIX B
ENGINEERING CALCULATIONS AND CATALOG CUT SHEETS

GERAGHTY & MILLER, INC.
Environment and Infrastructure
a heidemij company

SUBJECT: AOC-1 Sparge Design
PROJECT: O Area Drum Storage
CLIENT/PROJECT NO: TF0992 001

BY: DCP DATE: 7/10/97
CHKD: DATE:
REV: DATE:

PAGE
SHEET 1/14

Objective: Size HDPE piping for sparge system and Select Compressor.

Given: Sparge and SVE Layout provided by OHM (Attached)
Data from pilot Study
From OHM, use 7 cfm @ 20 psi for 30 sparge wells.
Air Sparge ROI of approx 25'
Sparge points installed to approx 42' bls (pilot study)
Sparge wells spaced approx 40' apart to Allow for overLap
Max continuous pressure in HDPE pipe, 60 psi from manufacturer Rep.
Max Flow of 30 wells * 7 cfm/well = 210 cfm at 20 psi

Assume: GW Level in each well at land surface

Calculations:

1) Calc pressure in each sparge well needed to overcome water in well and to Enter formation.

P_r = Pressure Required = ft' H_2O + 25%

P_r = 42' H_2O + 10.5' H_2O = 52.5' H_2O or 23 psi

P_r = 52.5' H_2O or 23 psi

23 psi > 20 psi used in pilot test OK

GERAGHTY & MILLER, INC.
Environment and Infrastructure
a heidemij company

SUBJECT: AOC-1 Sparge Design
PROJECT: Q Area Drum Storage
CLIENT/PROJECT NO: TF0992 001

BY: DCP DATE: 7/10/97
CHKD: DATE:
REV: DATE:

PAGE
SHEET 2/M

2) Pressure loss in pipe run (HDPE), worst case flow illustrated on attached figure, total of 11 wells at flow of 7 cfm/well = 77 cfm
friction loss provided by Ingersoll Rand Tables (Attached)
friction loss in tables calculated for sch 40 steel which has higher friction factor than HDPE pipe. Use steel friction factors as design factor
Select 2" ID HDPE pipe for Calculations.

A) Total flow for equipment Pad to AS-1, 77 cfm for approx 50'
from Chart
0.75 psi/1000 ft * 50' = 0.04 psi

B) total from AS-1 to AS-2, 70 cfm for 40'
from chart
0.57 psi/1000 ft * 40' = 0.02 psi

C) total from AS-2 to AS-3, 63 cfm for 40'
from chart
0.45 psi/1000' * 40' = 0.02 psi

D) Total from AS-3 to AS-4, 56 cfm for 40'
from chart
0.36 psi/1000 = 0.02 psi

E) Total from AS-4 to AS-5, 49 cfm for 40'
from chart
0.30 psi/1000' * 40' = 0.01 psi

f) Total from AS-5 to AS-6, 42 cfm at 40'
from chart 0.20 psi/1000' * 40' = 0.01 psi

G) No Additional friction loss factors available for flow rate less than 40 cfm in 2" pipe ∴ Use 0.20 psi/1000 loss for AS-6 → AS-11

h) AS-6 → AS-7 0.20 psi/1000' * 40' = 0.01 psi

I) AS-7 → AS-8 0.20 psi/1000 * 40' = 0.01 psi

J) AS-8 → AS-9 0.20 psi/1000' * 40' = 0.01 psi

K) AS-9 → AS-10 0.20 psi/1000' * 40' = 0.01 psi

L) AS-10 → AS-11 0.20 psi/1000 * 40' = 0.01 psi

Total ΔP in 2" HDPE = 0.2 psi

3) Pressure drop in Misc. Elbows, Values & Meters
- Assume up to (15) 90° Elbows, 3 Globe values, 3 standard Tees
Total Equil. Length = 52' + 177' + 31' = 260'
Total flow of 77 cfm in 2" Pipe for 260'
from chart 0.75 psi loss/1000' * 260' = 0.2 psi

4) Pressure drop through Oil Coalescing Filter from Spec sheet
see Attached

3 psi

5) Total pressure drop in System with 2" pipe

$\Delta P = 23psi + 0.2psi + 0.2psi + 3psi$

$\boxed{\Delta P = 26.4\ psi}$

Based on Calculations and preferred selection by OHM, use

Quincy → QSLP Low Pressure Compressor
oil flooded, Helical Screw, Single Stage
QSLP 30 242 ACFM @ 38 psig
30 HP 3/60/460

→ use After cooler to reduce dischage Temp to within 15° of Ambient Temp.
Thermal Transfer Products, Inc
AA-240 15°F Approach, Inlet Temp 200°F
flow rate 285 cfm. or Equal

→ Silvan Industries, Inc Air Receiver Tank.
Model # 92-36-400-137, 400 gal, 137 psi

Ingersoll Rand High Efficiency Coalescing Filter
→ model # IR250 CHE

5/14

Cu ft free air per min	Equivalent cu ft compressed air per min	Nominal diameter, in.															
		½	¾	1	1¼	1½	2	2½	3	3½	4	4½	5	6	8	10	12
10	1.96	10.0	1.53	0.43	0.10												
20	3.94	39.7	5.99	1.71	0.39	0.18											
30	5.89	.....	13.85	3.86	0.88	0.40											
40	7.86	.....	24.7	6.85	1.59	0.71	0.19										
50	9.84	.....	38.6	10.7	2.48	1.10	0.30										
60	11.81	.....	55.5	15.4	3.58	1.57	0.43										
70	13.75	.....	.....	21.0	4.87	2.15	0.57	0.22									
80	15.72	.....	.....	27.4	6.37	2.82	0.75	0.29									
90	17.65	.....	.....	34.7	8.05	3.57	0.57	0.95	0.37								
100	19.60	.....	.....	42.8	9.95	4.40	1.18	0.46									
125	19.4	.....	.....	46.2	12.4	6.90	1.83	0.71	0.14								
150	29.45	.....	.....	.....	22.4	9.90	2.64	1.02	0.32	0.15							
175	34.44	.....	.....	.....	30.8	13.40	3.64	1.40	0.43	0.20							
200	39.40	.....	.....	.....	39.7	17.60	4.71	1.83	0.57	0.27							
250	49.20	.....	.....	.....	.....	27.5	7.37	2.85	0.89	0.42	0.21						
300	58.90	.....	.....	.....	.....	39.6	10.55	4.11	1.30	0.60	0.31						
350	68.8	.....	.....	.....	.....	54.0	14.4	5.60	1.76	0.82	0.42	0.23					
400	78.8	.....	.....	.....	.....	.....	18.6	7.30	2.30	1.06	0.53	0.30					
450	88.4	.....	.....	.....	.....	.....	23.7	9.20	2.90	1.35	0.70	0.38					
500	98.4	.....	.....	.....	.....	.....	29.7	11.4	3.60	1.67	0.85	0.46					
600	118.1	.....	.....	.....	.....	.....	42.3	16.4	5.17	2.40	1.22	0.67					
700	137.5	.....	.....	.....	.....	.....	57.8	22.3	7.00	3.27	1.67	0.91					
800	157.2	.....	.....	.....	.....	.....	.....	29.2	9.16	4.26	2.18	1.20					
900	176.5	.....	.....	.....	.....	.....	.....	39.0	11.6	5.40	2.76	1.51					
1,000	196.0	.....	.....	.....	.....	.....	.....	45.7	14.3	6.65	3.40	1.87					
1,500	294.5	.....	.....	.....	.....	.....	.....	.....	32.3	15.0	7.6	4.20	2.32	0.87	0.29		
2,000	394.0	.....	.....	.....	.....	.....	.....	.....	57.5	26.6	13.6	7.5	4.18	1.53	0.36		
2,500	492	.....	.....	.....	.....	.....	.....	.....	.....	41.7	21.3	11.6	6.4	2.42	0.57	0.17	
3,000	589	.....	.....	.....	.....	.....	.....	.....	.....	60.0	30.7	16.7	9.2	3.48	0.81	0.24	
3,500	688	.....	.....	.....	.....	.....	.....	.....	.....	.....	41.7	22.6	12.8	4.68	1.07	0.33	
4,000	788	.....	.....	.....	.....	.....	.....	.....	.....	.....	54.5	29.7	16.5	6.17	1.44	0.44	
4,500	884	.....	.....	.....	.....	.....	.....	.....	.....	.....	.....	37.9	20.8	7.8	1.83	0.55	0.21
5,000	984	.....	.....	.....	.....	.....	.....	.....	.....	.....	.....	46.4	25.7	9.7	2.26	0.67	0.27
6,000	1,181	.....	.....	.....	.....	.....	.....	.....	.....	.....	.....	.....	37.0	13.9	3.25	0.98	0.38
7,000	1,375	.....	.....	.....	.....	.....	.....	.....	.....	.....	.....	.....	50.3	18.7	4.43	1.34	0.51
8,000	1,572	.....	.....	.....	.....	.....	.....	.....	.....	.....	.....	.....	.....	24.7	5.80	1.73	0.71
9,000	1,765	.....	.....	.....	.....	.....	.....	.....	.....	.....	.....	.....	.....	31.3	7.33	2.20	0.87
10,000	1,960	.....	.....	.....	.....	.....	.....	.....	.....	.....	.....	.....	.....	38.6	9.05	2.72	1.06
11,000	2,165	.....	.....	.....	.....	.....	.....	.....	.....	.....	.....	.....	.....	46.7	10.9	3.29	1.28
12,000	2,362	.....	.....	.....	.....	.....	.....	.....	.....	.....	.....	.....	.....	55.5	13.0	3.90	1.51
13,000	2,560	.....	.....	.....	.....	.....	.....	.....	.....	.....	.....	.....	.....	.....	15.2	4.58	1.77
14,000	2,750	.....	.....	.....	.....	.....	.....	.....	.....	.....	.....	.....	.....	.....	17.7	5.32	2.07
15,000	2,945	.....	.....	.....	.....	.....	.....	.....	.....	.....	.....	.....	.....	.....	20.3	6.10	2.36
16,000	3,144	.....	.....	.....	.....	.....	.....	.....	.....	.....	.....	.....	.....	.....	23.1	6.95	2.70
18,000	3,530	.....	.....	.....	.....	.....	.....	.....	.....	.....	.....	.....	.....	.....	29.2	8.80	3.42
20,000	3,940	.....	.....	.....	.....	.....	.....	.....	.....	.....	.....	.....	.....	.....	36.2	10.8	4.22
22,000	4,330	.....	.....	.....	.....	.....	.....	.....	.....	.....	.....	.....	.....	.....	43.7	13.2	5.12
24,000	4,724	.....	.....	.....	.....	.....	.....	.....	.....	.....	.....	.....	.....	.....	51.9	15.6	5.92
26,000	5,120	.....	.....	.....	.....	.....	.....	.....	.....	.....	.....	.....	.....	.....	.....	18.3	7.15
28,000	5,500	.....	.....	.....	.....	.....	.....	.....	.....	.....	.....	.....	.....	.....	.....	21.3	8.3
30,000	5,890	.....	.....	.....	.....	.....	.....	.....	.....	.....	.....	.....	.....	.....	.....	24.4	9.5

*For longer or shorter lengths of pipe the friction loss is proportional to the length, *i.e.*, for 500 ft. one-half of the above; for 4,000 ft., four times the above, etc.

TABLE D. — LOSS OF AIR PRESSURE DUE TO FRICTION
(In PSI in 1000 Ft. Pipe*, 60 Lb. Gauge Initial Pressure)

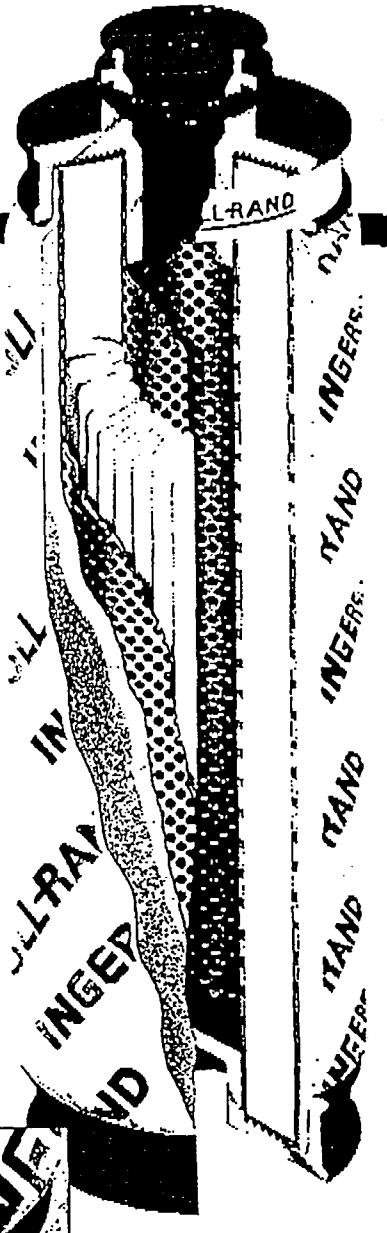

The CHE Series of coalescing filters remove liquid oil and water aerosols and fine particulate matter to the lowest practical levels.

All CHE Series filters include exclusive, pleated filtration media designed to...

- remove liquid aerosols down to 0.001 ppm by weight and particulate matter to 0.01 micron.
- deliver filtration efficiency exceeding 99.9999% D.O.P.
- have a very low wetted pressure drop of 3 psi/0.21 bar thereby reducing operating costs.
- increase filtration surface area resulting in long element life and reduced maintenance costs.

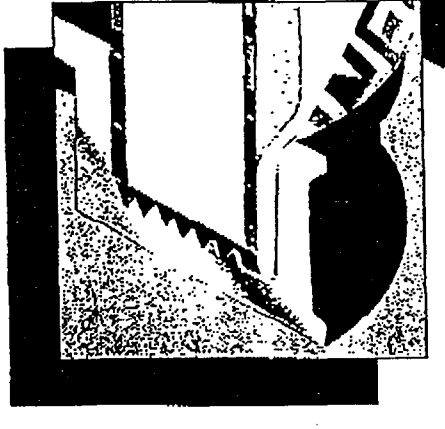

The PC Series of coalescing/particulate filters remove liquid oil and water aerosols and particulate matter to levels suitable for general purpose applications.

All PC Series filters feature ...

- **Exclusive, pleated filtration** media to remove liquid aerosols down to 0.5 ppm by weight and particulate matter to 1 micron.
- **Filtration efficiency** exceeding 99.99% D.O.P.
- **Low wetted pressure** drop of 2 psi/0.14 bar (1 psi/0.07 bar clean & dry) to minimize operating costs.

All CHE and PC Series filters also include a ...

- **Patent pending, element drain layer** to quickly channel liquid out of the element for improved efficiency.
- **Patent pending, lower end cap** to increase the coalesced droplet size to prevent re-entrainment of separated liquids into the air stream.

INGERSOLL-RAND

LENGTH OF STRAIGHT PIPE IN FEET HAVING THE SAME PRESSURE LOSS AS THE TABULATED FITTING

Be Sure to Read Notes on Page 85

Nominal Pipe Size Inches	Schedule Number	Inside Diameter		Globe Valve*	Angle Valve*	Gate Valve*	Swing Check* Valve**	Plug Cock*	45° Std. Elbow	90° Std. Elbow	90° Long Radius Elbow	Standard Tee		Close Return Bend	90° Welding Elbow	
												Run of Tee	Side Outlet		Short Radius	Long Radius
		Inches	Feet	L/D = 340	L/D = 145	L/D = 13	L/D = 135	L/D = 18	L/D = 16	L/D = 30	L/D = 20	L/D = 20	L/D = 60	L/D = 50		
½	40	0.622	0.0518	17.6	7.5	.67	7.0	.93	.83	1.55	1.04	1.04	3.11	2.59		
¾	40	0.824	0.0685	23.3	9.9	.89	9.2	1.23	1.10	2.06	1.37	1.37	4.11	3.43		
1	40	1.049	0.0872	29.7	13.6	1.14	11.8	1.57	1.40	2.62	1.74	1.74	5.2	4.36	1.4	1.1
1½	40	1.610	0.134	45.5	19.4	1.74	18.1	2.41	2.14	4.02	2.68	2.68	8.1	6.7	2.1	1.6
2	40	2.067	0.172	59	25.0	2.24	23.2	3.10	2.75	5.2	3.44	3.44	10.3	8.6	2.8	2.1
2½	40	2.469	0.206	70	29.9	2.68	27.8	3.70	3.30	6.2	4.12	4.12	12.4	10.3	3.3	2.5
3	40	3.068	0.256	87	37.1	3.32	34.6	4.60	4.10	7.7	5.1	5.1	15.4	12.8	4.1	3.1
4	40	4.026	0.335	114	48.5	4.35	45.2	6.0	5.4	10.1	6.7	6.7	20.1	16.8	5.4	4.0
5	40	5.047	0.420	143	61	5.5	57	7.6	6.7	12.6	8.4	8.4	25.2	21.0	6.7	5.1
6	40	6.065	0.505	172	73	6.6	68	9.1	8.1	15.1	10.1	10.1	30.3	25.3	8.1	6.1
8	40	7.981	0.665	226	96	8.7	90	12.0	10.7	19.9	13.3	13.3	40.0	33.3	11	8.0
10	40	10.020	0.836	284	121	10.9	113	15.0	13.4	25.1	16.7	16.7	50.2	41.8	13	10
12	40	11.938	0.995			13.0	134	17.9	15.9	29.8	19.9	19.9	60	50	16	12
14	30	13.250	1.104			14.3	149		17.7	33.2	22.1	22.1	66	55	18	13
16	30	15.250	1.270			16.5	171		20.3	38.2	25.4	25.4	76	64	20	15
18	30	17.124	1.430			18.6	193		22.8	43.2	28.6	28.6	86	72	23	17
20	20	19.250	1.600			20.8	216		25.6	48.0	32.0	32.0	96	80	25	19
24	20	23.250	1.940			25.2	262		31.0	58	38.8	38.8	117	97	30	23

*All valves and cocks to be fully open.

**Check valves require 0.50 psi pressure loss to open fully.

Welding elbow data from Midwest Piping Catalog 61 (1961).

L/D values from Crane Co. Technical Paper No. 410 (1957). Both L and D in feet.

PRESSURE LOSS IN POUNDS FOR EACH 100 FEET OF STRAIGHT PIPE

Be Sure to Read Notes on Page 85

Nominal Pipe Size	CFM Free Air	Line Pressure — PSIG													
		10	15	20	30	40	50	75	100	125	150	200	250	300	350
½" SCHEDULE 40	10		1.45	1.24	.96	.79	.67	.48	.38	.31	.26	.20	.16	.14	.12
	15			2.68	2.08	1.70	1.43	1.04	.81	.67	.57	.43	.35	.30	.25
	20				3.60	2.94	2.48	1.80	1.41	1.15	.98	.75	.61	.51	.44
	30						5.40	3.90	3.05	2.50	2.12	1.63	1.32	1.11	.96
	40							6.80	5.31	4.37	3.70	2.84	2.30	1.94	1.67
	50								8.20	6.75	5.70	4.37	3.55	2.99	2.58
	60								11.7	9.61	8.16	6.25	5.08	4.27	3.68
	80										14.4	11.0	8.95	7.52	6.50
	100											17.1	13.9	11.7	10.1
¾" SCHEDULE 40	10	.42	.35	.30	.23	.19	.16	.12							
	20	1.57	1.31	1.12	.87	.71	.60	.43	.34	.28	.24	.18	.15	.12	.11
	35			3.22	2.50	2.04	1.72	1.25	.98	.80	.68	.52	.42	.35	.31
	50				4.95	4.05	3.42	2.47	1.93	1.59	1.35	1.03	.84	.71	.61
	65						5.71	4.12	3.23	2.65	2.25	1.72	1.40	1.18	1.01
	80							6.19	4.74	3.98	3.37	2.58	2.10	1.76	1.52
	100							9.60	7.53	6.40	5.25	4.02	3.26	2.74	2.37
	125								11.7	9.70	8.12	6.22	5.05	4.25	3.67
	150									12.6	11.5	8.85	7.16	6.03	5.20
	200											15.6	12.6	10.6	9.14
	250												19.7	16.6	14.3

in. x 25.4 = mm; cfm x 0.02832 = m³/ min; psi x 6.895 = kPa; psi loss/100 ft x 6.786 = kPa loss/30 m

3/14

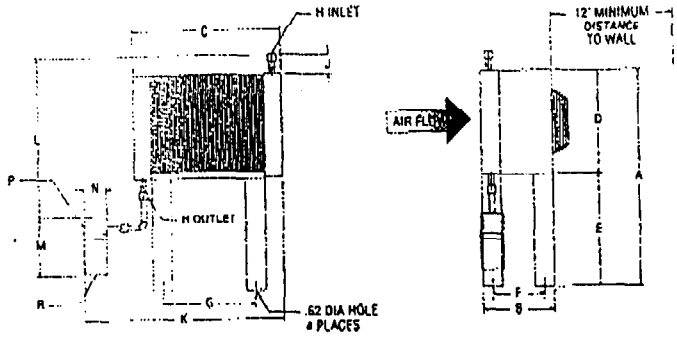

Model	A	B	C	D Approx	E	F	G	H NPT	J	*K Approx	*L Approx	M	OPTIONAL SEPARATOR N	P NPT	R	RECOMMENDED OPTIONAL SEPARATOR MODEL NUMBER
AA-35	16.50	14.75	30.50	22.50	24.00	10.75	19.09	1.00	4.00	41.12	34.50	10.00	4.62	1	1/4	S-100M or AD
AA-50																
AA-65																
AA-80								1.50			35.00					
AA-100			43.50				32.09			54.12						S-200M
AA-120										54.20	37.10	12.10	4.70	1		
AA-150											38.80					
AA-240	49.50		47.63	25.50				2.00		58.33	40.60			1 1/2		S-300M
AA-300	55.50		51.68	31.50			36.00			62.38	49.60					

*Dimension will vary depending on the separator model used and the piping between the separator and cooler.

MAX. SCFM @ 5, 10, 15 and 20°F Approach

INLET TEMP. °F		150				200				250				300				350				RECOMMENDED OPTIONAL SEPARATOR MODEL NUMBER
APPROACH TEMP. °F		5	10	15	20	5	10	15	20	5	10	15	20	5	10	15	20	5	10	15	20	
AFTERCOOLER MODEL NUMBER	AA-35	25	42	58	73	18	31	43	53	15	25	35	44	13	22	30	37	11	19	26	32	S-100M or AD
	AA-50	34	58	79	99	25	43	59	74	21	36	50	62	18	31	42	52	16	27	38	47	
	AA-65	42	73	99	125	32	55	77	95	27	47	65	81	24	41	57	71	22	37	52	65	
	AA-80	50	87	119	150	40	69	94	117	34	59	80	100	30	52	71	89	28	47	65	82	
	AA-100	60	102	140	177	48	81	112	140	43	73	100	124	38	64	87	110	34	59	81	100	
	AA-120	81	138	190	235	61	105	142	177	51	87	120	150	43	75	102	127	40	69	94	116	S-200M
	AA-150	92	160	220	270	73	125	172	215	63	110	150	187	55	95	130	160	50	86	120	148	
	AA-240	160	275	380	425*	120	207	285	355	100	175	240	300	84	145	204	250	78	135	185	231	S-300M
	AA-300	184	318	440	480*	145	250	345	430	125	217	300	375	110	190	257	320	100	175	240	300	

Above specifications are based on 80 to 125 PSIG operating pressures.
Maximum pressure drop, less than 3 psi.
*Maximum ratings restricted by pressure drop, actual thermal capacities are higher.
A flexible metal hose must be properly installed between the compressor and aftercooler to validate warranty.

Model	Fan CFM	Motor H.P.	Standard Motor (ODP) Voltage	Standard Motor (ODP) Full Load Amps/Motor	Optional Motor (TEFC) Voltage	Optional Motor (TEFC) Full Load Amps/Motor	Optional Motor (TEFC) Voltage	Optional Motor (TEFC) Full Load Amps/Motor	Approximate Shipping Weight (lbs.)
AA-35	1375	1/4	115/1/60	7.2	115/208 230/1/60	6/2.6-2.5	208-230/ 460/3/60	1.4-1.3/.65	110
AA-50									
AA-65									120
AA-80									
AA-100	2450								140
AA-120									
AA-150	2350								145
AA-240	4600	1/4 (2)							200
AA-300	4700								300

Standard Motor(s) = 1600 RPM, Custom Frame, Equipped with Thermal Overload. Optional Motor(s) = 1725 RPM, Nema 48 Frame, No Thermal Overload.
Published electrical ratings are approximate and may vary because of motor brand. Actual ratings are on motor nameplate.

UPA SERIES

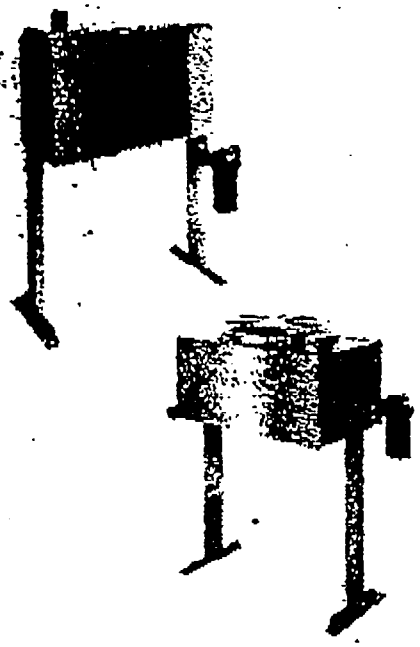

AA SERIES

AHP SERIES

COMPRESSED AIR AND GAS

AFTERCOOLERS

THERMAL TRANSFER PRODUCTS, LTD

UPA SERIES

SPECIAL FEATURES

- Horizontal or vertical air flow
- Lightweight, may be shipped UPS
- Ratings based on comprehensive testing
- Attractive, durable baked enamel finish
- Floor or suspended mounting
- Competitively priced

MATERIALS OF CONSTRUCTION

Cabinet: Steel with baked enamel finish

Core: Aluminum fins on copper tubes

Fan: Heavy gauge aluminum with steel hub

Motor: Open vented

Fan Guard: Zinc Chromate Plated Steel

AA SERIES

SPECIAL FEATURES

- Horizontal air flow
- Optional weatherproof junction box
- Floor or suspended mounting
- Optional TEFC motor(s)
- Ratings based on comprehensive testing
- Wired for single point external connection

MATERIALS OF CONSTRUCTION

Cabinet: Galvanized steel

Core: Aluminum fins on copper tubes

Fan: Heavy gauge aluminum with steel hub

Motor: Open vented

Fan Guard: Steel with baked enamel finish

AHP SERIES

SPECIAL FEATURES

- Vertical air flow
- High technology compact design
- Optional air motor
- Rugged heavy duty construction
- Excellent for heat recovery

MATERIALS OF CONSTRUCTION

Legs: Steel with baked enamel finish

Core: Aluminum

Fan: Aluminum hub, polypropylene blades

Shroud: Painted steel

Motor: TEFC

Fan Guard: Steel with baked enamel finish

PRESSURE AND TEMPERATURE RATINGS FOR ALL MODELS

Maximum Operating Pressure.....250 PSIG

Maximum Operating Temperature.....350°F

TECH-SERVICES TEL: Jul 10'97 13:59 No.021 P.03/04

10/14

2121 Cleveland Avenue
Marinette, Wisconsin 54143
(715) 735-9311

SILVAN INDUSTRIES Inc.

Industrial Air Receiver Tanks

Silvan supplies Industrial Air Receiver Tanks in two basic designs. Both are designs for A.S.M.E. approved tanks, manufactured from mild carbon steel, shot blasted to commercial tolerance and provided with a primer paint coating. They are available in these configurations:

- *Diameters from 24 to 72 inches*
- *Capacities from 125 to 3,750 gallons*
- *Tank only (91 Series)*
- *Tank with 12 inch base ring (92 Series)*

How to order:

*Each type of tank carries a **Silvan Stock Number.** For example, **92-54-1550-125** The **92** indicates a 92 Series tank (supplied with a 12 inch base ring) . . . the **54** refers to the tank's diameter in inches . . . the **1550** indicates the tank's capacity in gallons . . . and the **125** means the tank is rated for a working pressure of 125 pounds per square inch.*

To order, simply select the tank diameter that meets your requirements, check to see what capacities are available with the diameter you've chosen, select Design 'A' or 'B', or 'C', and determine how you want your tank supplied . . . tank only (91 Series) or with base ring (92 Series). Once you've made your selection, call Silvan at 800-AIR-TANK and give us the Silvan Stock Number, quantity and shipping information for the tanks you want. We'll do the rest.

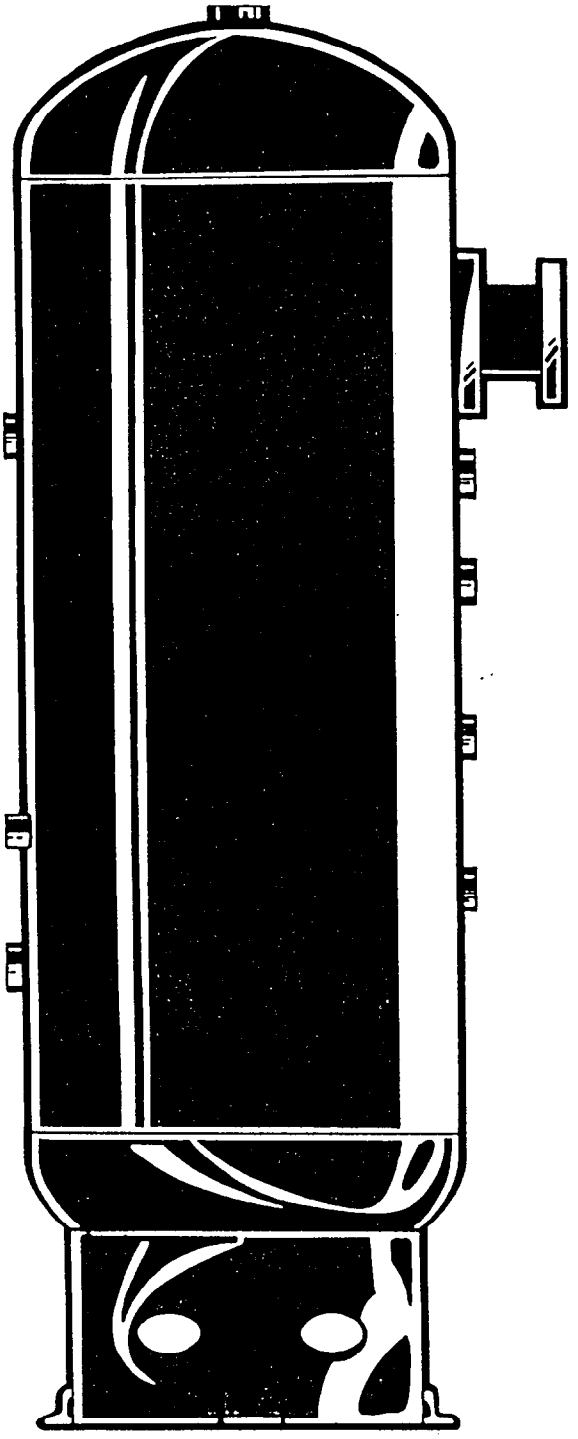

For all your stock and custom tank requirements, call Silvan first . . . 800-AIR-TANK. In Wisconsin . . . 800-472-1006.

Manufacturers of Tanks and Code Pressure Vessels . . . D.O.T. Tanks • Halon Vessels • Oil Separators • Air Receivers

Industrial Air Receiver Tanks

	Nominal Dimensions: Inches									N.P.T. Openings						Nom. Cap. Gals.	Work. Pres. P.S.I.	Catalog Number
	Dia.	T.L.	B.C.	B	C	D	E	F	G	H	J	K	L	M	N			
A	24	68¼		58	16	13½	15	15 9/16	9½	3	1	¼	¾	1	½	125	150	91-24-125-150
		68¼	16½	58	16	13½	15	15 9/16	9½	3	1	¼	¾	1	½	125	150	92-24-125-150
	36	92		77	21	29¾	14	13¼	13	3	1	¼	1	1	½	400	137	91-36-400-137
		92	21½	77	21	29¾	14	13¼	13	3	1	¼	1	1	½	400	137	92-36-400-137
	36	92		75¾	20¾	30	14	13¼	13	3	½	¼	1½	1	½	400	200	91-36-400-200
		92	21½	75¾	20¾	30	14	13¼	13	3	½	¼	1½	1	½	400	200	92-36-400-200
B	42	113		93⅝	26⅛	13½	13½	32⅞	41⅛	3	¾	¾		1	2	620	150	91-42-620-150
		113	35	93⅝	26⅛	13½	13½	32⅞	41⅛	3	¾	¾		1	2	620	150	92-42-620-150
	48	144		114⅝	29⅝	17	17	38⅛	45¾	6" 150#	¾	¾		1	2	1040	150	91-48-1040-150
		144	42	114⅝	29⅝	17	17	38⅛	45¾	6" 150#	¾	¾		1	2	1040	150	92-48-1040-150
	54	168		127	45½	25	20	41	41	6" 150#	¾	2		1	2	1550	150	91-54-1550-150
		168	42	127	45½	25	20	41	41	6" 150#	¾	2		1	2	1550	150	92-54-1550-150
	60	192		152½	45½	38	25	41	41	6" 150#	¾	2		1	2	2200	150	91-60-2200-150
		192	42	152½	45½	38	25	41	41	6" 150#	¾	2		1	2	2200	150	92-60-2200-150
	66	216⅝	54	164 9/16	56 9/16	36	25	47¾	47¾	8" 150#	¾	2		1	2	3000	150	92-66-3000-150
	72	229¾	54	180	60	40	30	50	50	8" 150#	¾	2		1	2	3750	150	92-72-3750-150
C	24	65	16½	8 15/16	22 9/16	24 9/16	47 13/16			2	1½	¼	¾	1	1½	120	200	92-24-120-200
	30	74	21½	11½	24½	26½	51			2	2	¼	¾	1	1½	200	200	92-30-200-200
	30	83¾	21½	12½	30¼	28½	59¾			2	2	¼	¾	1	1½	240	200	92-30-240-200

A

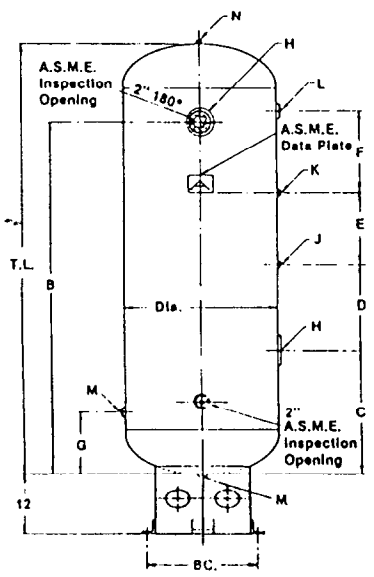

B

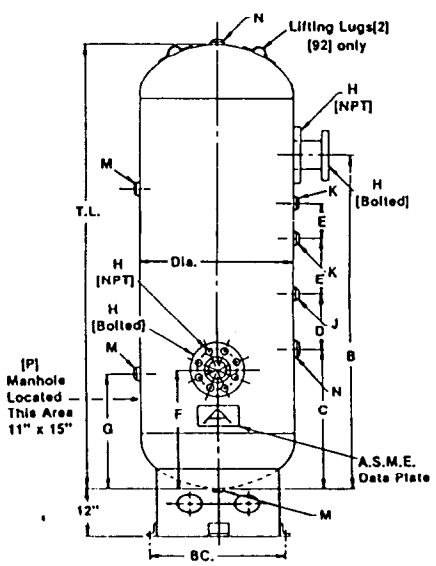

C

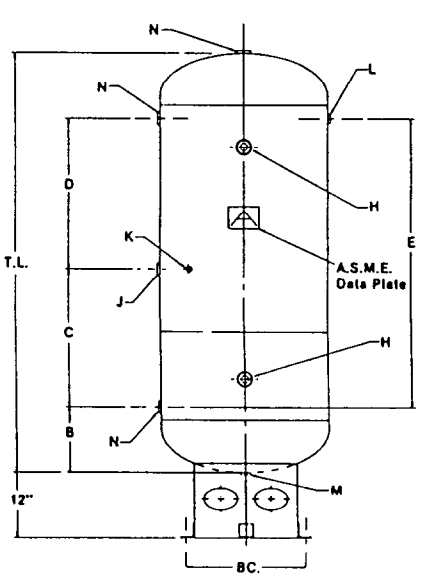

All industrial air receivers are available less ring base (91) or complete as illustrated (92). (93) 6" ht. base ring optional.

12/14

DIRECT DRIVE COMPRESSOR SPECIFICATIONS

DIMENSIONS		QSLP 30	QSLP 60	QSLP 100	QSLP 125	QSLP 150
LENGTH	IN.	84	84	90	96	96
	mm	2,137	2,137	2,290	2,438	2,438
WIDTH	IN.	48	48	48	58	58
	mm	1,219	1,219	1,220	1,473	1,473
HEIGHT	IN.	67	67	63	82	82
	mm	1,701	1,701	1,600	2,083	2,083
SHIPPING WEIGHT		2,675 lbs	2,675 lbs	3,975 lbs	5,960 lbs	5,960 lbs
		1,216 kg	1,216 kg	1,807 kg	2,709 kg	2,709 kg
PERFORMANCE						
ACFM @ 30 PSIG		246	500	717	1,000	---
ACFM @ 38 PSIG		242	496	712	---	992
Motor HP		30	60	100	125	150
BHP @ 30 PSIG		25	60	88	128	---
BHP @ 38 PSIG		31	66	96	---	145
MAX PSIG Full Load		40	38	42	35	42

BELT DRIVEN COMPRESSOR SPECIFICATIONS

DIMENSIONS		QSLP 10	QSLP 15	QSLP 20
LENGTH	IN.	65	65	65
	mm	1,651	1,651	1,651
WIDTH	IN.	34	34	34
	mm	864	864	864
HEIGHT	IN.	46	46	46
	mm	1,168	1,168	1,168
SHIPPING WEIGHT		960 lbs	960 lbs	980 lbs
		436 kg	436 kg	445 kg
PERFORMANCE				
ACFM @ 40 PSIG Full Load		83	124	166
Maximum Modulated Pressure		50	50	50
Motor Horsepower		10	15	20
BHP @ 40 PSIG		11	16.5	22
Compressor R.P.M.		1,600	2,400	3,200
Minimum Full Load Pressure		35	35	35

For more information on the QSLP, call your local distributor or call the Quincy Air Line, 217-222-7700.

Quincy

Compressor Division

Coltec Industries

Quincy Quality

Quincy. Undeniably the world's finest compressors.

CAGI

We reserve the right to change specifications without liability, without advance notice, and without incurring any obligation for products previously or subsequently sold.
©1994 Quincy Compressor. All rights reserved. Litho in USA (SL-0001 7/94)

13/14

Coltec Industries

Quincy Compressor Division

QSLP Low Pressure Compressor

Oil Flooded - Helical Screw - Single Stage

FEATURES:

- Designed with Latest Screw Compressor Technology
- Complete Package From the Factory
- Minimal Maintenance Required (Eliminates Costly Downtime)
- 100,000+ Hour L-10 Bearing Life
- Automatically Regulates Output to Demand
- Low Unloaded Horsepower
- Direct Drive Ductile Iron Rotors
- Air Cooled Oil Cooler
- Quiet Running
- Discharge Air Temperature of 210º F or Less
- More Efficient than 2-Stage Blowers

INSTRUMENT PANEL INCLUDES:

- % Capacity Gauge
- Discharge Air/Oil Temperature Gauge
- Reservoir Air Pressure Gauge
- Hourmeter
- Service Indicators for: Lubricant Filter, Inlet Filter & Separator Element

OPTIONAL EQUIPMENT:

- Different Voltages
- Water Cooled Cooling
- NEMA 4 Electrical System
- Cabinet Enclosures

STANDARD :

- Standard NEMA Frame-sized, 460 Volt, 3 Phase, 60 Hertz Main Drive Motor, 1800 RPM or 3600 RPM
- Full Voltage Magnetic Starter, Mounted and Wired
- Positive Displacement Lubricant Pump
- Auto-Dual Control for Efficient Operation
- Heavy -Duty Dry-Type Inlet Filter
- Full Flow, 10 Micron Lubricant Filter
- Factory Fill of Quin-Syn Synthetic Lubricant

SAFETY DEVICES:

- UL Approved Electrical System
- High Pressure Unload Switch
- Safety Relief Valve
- High Temperature Shutdown System
- Control Line Filtration
- Power On Light

TYPICAL APPLICATIONS:

- Printing
- Aeration
- Glass Making
- Chemical Transportation
- Textile Equipment
- Pharmaceutical Processes
- Most Low Pressure Conveying Processes

CAD File: 17260-A20

LEGEND

- REPRESENTS RADIUS OF INFLUENCE OF SVE WELL (EACH CIRCLE REPRESENTS ONE SVE WELL)
- AIR SPARGE WELL
- BAKER ENVIRONMENTAL INC. (AREA OF REMEDIATION)
- ENVIRONMENTAL SCIENCE AND ENGINEERING, INC. (AREA OF REMEDIATION)

REQUIRED NUMBER OF AS AND SVE WELLS

	BAKER	ESE
AIR SPARGE	8	22
SOIL VAPOR EXTRACTION	2	14

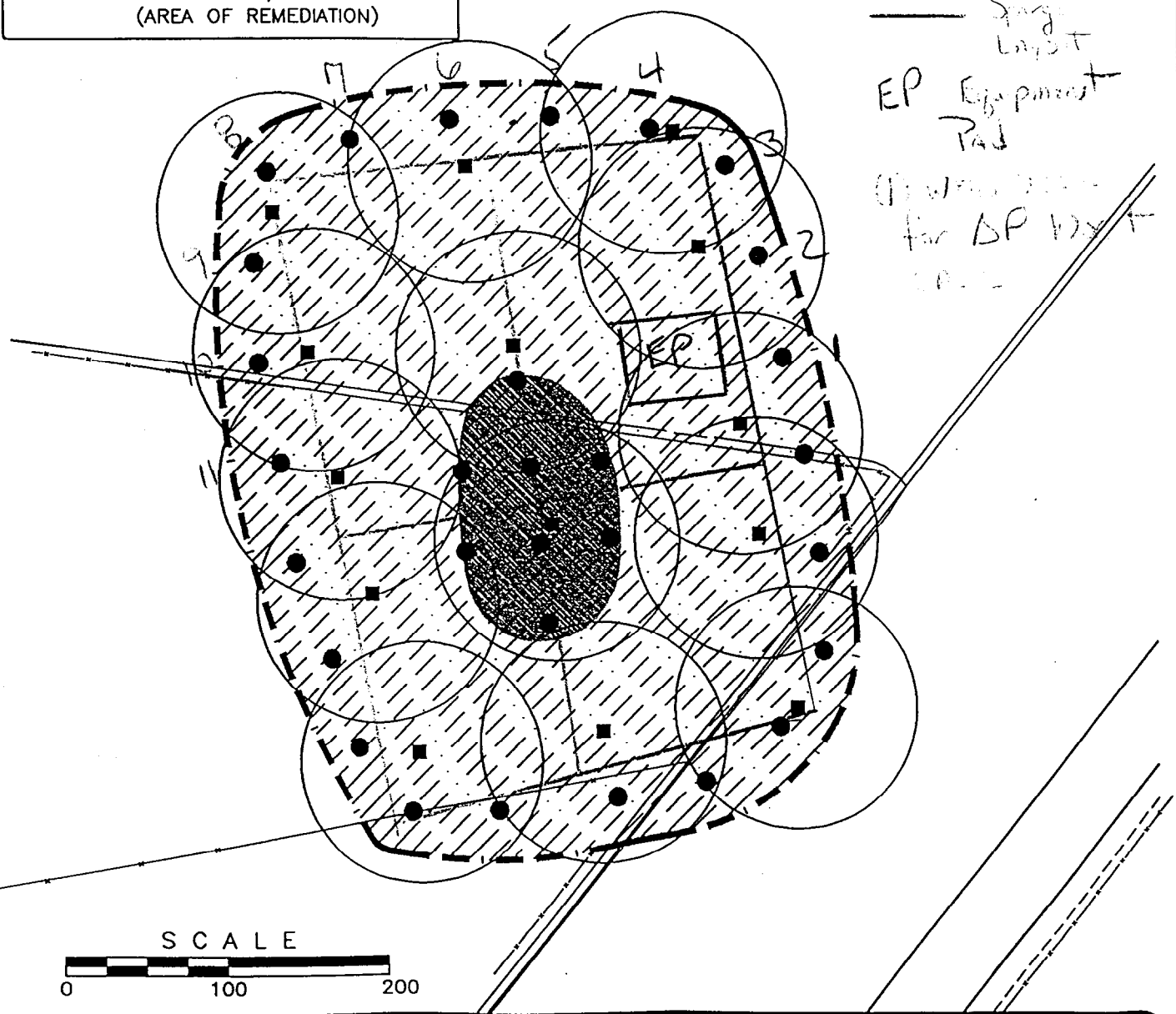

Plot Scale: 1 = 100' revision 0

OHM Remediation Services Corp.

OHM Project No. 17260

Drawn By:	Checked By:	Approved By:
D. Leech	A. Westerbaan	P.Tully
Date: 4/29/97	Scale: AS SHOWN	Drawing No. 17260-A20

ESTIMATED NUMBER OF AIR SPARGE AND SOIL VAPOR EXTRACTION WELLS NECESSARY FOR REMEDIAL EXPANSION OF AOC-1

Q-AREA DRUM STORAGE YARD

PREPARED FOR

NORFOLK NAVAL BASE
NORFOLK, VIRGINIA

GERAGHTY & MILLER, INC.
Environment and Infrastructure
a heidemij company

SUBJECT: AOC-2 Sparge Design
PROJECT: Q Area Drum Storage
CLIENT/PROJECT: NO: TF0992.001

BY: DCP DATE: 7/10/97
CHKD: DATE:
REV: DATE:

PAGE

SHEET 1/13

Objective: Size HDPE piping and Compressor for AOC-2

Given: Data from Pilot Test
Based on OHM requirements use 6 cfm @ 12 psig
Sparge wells spaced approx 40' apart to allow for overlap
See Attached drawing for Layout, 20 sparge wells installed to approx 42' bls.

Assume: Equipment Pad placed near center of distribution Header
Use friction tables for Steel, Attached, which are higher than friction loss in HDPE pipe, design factor
Water table at Land surface
Use 60 psi or less in HDPE distribution system based on HDPE spec notes.

Calculations:

1) Pressure required to overcome water in well and to Enter formation

P_r = pressure required = ft' H_2O + 25%

= 42' H_2O + 10.5' = $\boxed{52.5' \text{ or } 23 \text{ psi}}$

2) Total flow for each sparge point 6 cfm/well * 20 well = 120 cfm

Calculate ΔP loss through main distribution line to sparge header using 2" ID HDPE, flow of 120 cfm for length of approx 50'

from chart 1.80 psi loss/1000' pipe * 50' = **0.09 psi**

3) Calculate loss from main line to end of header. Assume that 20 sparge wells will be evenly divided, 10 wells on each side of main line. ΔP on each side should be approx equal

A) Total flow of 60 cfm from main header to first AS well

60 cfm travels approx 30' in 2" pipe

from chart 0.43 psi loss/1000' * 30' = **0.01 psi**

AS-1 → AS-2

B) flow of 54 cfm travels approx 40' in 2" pipe

from chart 0.35 psi/1000' * 40' = **0.01 psi**

AS-2 → AS-3

C) flow of 48 cfm travels 40' in 2" pipe

from chart 0.30 psi/1000' × 40' = **0.01 psi**

D) AS-3 → AS-4

flow of 42 cfm travels 40' in 2" pipe

from chart 0.21 psi/1000' * 40' = **0.01 psi**

E) AS-4 → AS5

flow of 36 cfm travels 40' in 2" pipe.

from chart 0.19 psi/1000' x 40' = 0.01 psi

F) AS-5 → AS-6

No additional friction loss factors available for flow rate less than 40 cfm in 2" pipe USE 0.19 psi/1000 loss for AS-5 → AS-10

= 0.01 psi

G) AS-6 → AS-7

= 0.01 psi

H) AS-7 → AS-8 = 0.01 psi

I) AS-8 → AS-9 = 0.01 psi

J) AS-9 → AS-10 0.01 psi

Total ΔP through header = 0.1 psi

4) Pressure drop in Coalescing Filter from spec sheet attach

3 psi

5) Assume pressure Drop in Misc, fittings, Elbows, meters, Valves
Assume up to (15) 90° Elbows, 3 Globe values, 3 Tees
Equivalent Length from Ingersoll Rand Chart see Attached for 2" pipe

Total EL = (15 * 5.2') + (3 * 59') + (3 * 3.44')

EL = 265' pipe

At total flow of 120 cfm, 2" pipe for approx 480' ft
from chart 1.86 psi loss/1000' * 480' = $\boxed{0.9 \text{ psi}}$

6) Total pressure required for system

ΔP = 23 psi + 0.09 psi + 0.1 psi + 3 psi + 0.9 psi

$\underline{\underline{\Delta P = 27 \text{ psi}}}$

Based on Calculations use 2" HDPE pipe for distribution system

Select Compressor for min of 27 psig and 120 cfm

→ Quincy, QSLP Low Pressure Compressor, Oil Flooded, Helical Screw Single Stage QSLP 30, 242 cfm @ 38 psig, 30 HP

→ After cooler Thermal Transfer Products, Inc. AA-240 15° Approach, 275 scfm or Equal

→ Silvan Industries, Inc. Air Receiver Tank Model # 92-36-400-137, 400 gal, 137 psi

5/13

Cu ft free air per min	Equivalent cu ft compressed air per min	Nominal diameter, in.															
		½	¾	1	1¼	1½	2	2½	3	3½	4	4½	5	6	8	10	12
10	1.96	10.0	1.53	0.43	0.10												
20	3.94	39.7	5.99	1.71	0.39	0.18											
30	5.89	.....	13.85	3.86	0.88	0.40											
40	7.86	.....	24.7	6.85	1.59	0.71	0.19										
50	9.84	.....	38.6	10.7	2.48	1.10	0.30										
60	11.81	.....	55.5	15.4	3.58	1.57	0.43										
70	13.75	.....	.....	21.0	4.87	2.15	0.57	0.22									
80	15.72	.....	.....	27.4	6.37	2.82	0.75	0.29									
90	17.65	.....	.....	34.7	8.05	3.57	0.57	0.95	0.37								
100	19.60	.....	.....	42.8	9.95	4.40	1.18	0.46									
125	19.4	.....	.....	46.2	12.4	6.90	1.83	0.71	0.14								
150	29.45	.....	.....	.....	22.4	9.90	2.64	1.02	0.32	0.15							
175	34.44	.....	.....	.....	30.8	13.40	3.64	1.40	0.43	0.20							
200	39.40	.....	.....	.....	39.7	17.60	4.71	1.83	0.57	0.27							
250	49.20	.....	.....	.....	.....	27.5	7.37	2.85	0.89	0.42	0.21						
300	58.90	.....	.....	.....	.....	39.6	10.55	4.11	1.30	0.60	0.31						
350	68.8	.....	.....	.....	.....	54.0	14.4	5.60	1.76	0.82	0.42	0.23					
400	78.8	.....	.....	.....	.....	.....	18.6	7.30	2.30	1.06	0.53	0.30					
450	88.4	.....	.....	.....	.....	.....	23.7	9.20	2.90	1.35	0.70	0.38					
500	98.4	.....	.....	.....	.....	.....	29.7	11.4	3.60	1.67	0.85	0.46					
600	118.1	.....	.....	.....	.....	.....	42.3	16.4	5.17	2.40	1.22	0.67					
700	137.5	.....	.....	.....	.....	.....	57.8	22.3	7.00	3.27	1.67	0.91					
800	157.2	.....	.....	.....	.....	.....	.....	29.2	9.16	4.26	2.18	1.20					
900	176.5	.....	.....	.....	.....	.....	.....	39.0	11.6	5.40	2.76	1.51					
1,000	196.0	.....	.....	.....	.....	.....	.....	45.7	14.3	6.65	3.40	1.87					
1,500	294.5	.....	.....	.....	.....	.....	.....	.....	32.3	15.0	7.6	4.20	2.32	0.87	0.29		
2,000	394.0	.....	.....	.....	.....	.....	.....	.....	57.5	26.6	13.6	7.5	4.18	1.53	0.36		
2,500	492	.....	.....	.....	.....	.....	.....	.....	.....	41.7	21.3	11.6	6.4	2.42	0.57	0.17	
3,000	589	.....	.....	.....	.....	.....	.....	.....	.....	60.0	30.7	16.7	9.2	3.48	0.81	0.24	
3,500	688	.....	.....	.....	.....	.....	.....	.....	.....	.....	41.7	22.6	12.8	4.68	1.07	0.33	
4,000	788	.....	.....	.....	.....	.....	.....	.....	.....	.....	54.5	29.7	16.5	6.17	1.44	0.44	
4,500	884	.....	.....	.....	.....	.....	.....	.....	.....	.....	.....	37.9	20.8	7.8	1.83	0.55	0.21
5,000	984	.....	.....	.....	.....	.....	.....	.....	.....	.....	.....	46.4	25.7	9.7	2.26	0.67	0.27
6,000	1,181	.....	.....	.....	.....	.....	.....	.....	.....	.....	.....	.....	37.0	13.9	3.25	0.98	0.38
7,000	1,375	.....	.....	.....	.....	.....	.....	.....	.....	.....	.....	.....	50.3	18.7	4.43	1.34	0.51
8,000	1,572	.....	.....	.....	.....	.....	.....	.....	.....	.....	.....	.....	.....	24.7	5.80	1.73	0.71
9,000	1,765	.....	.....	.....	.....	.....	.....	.....	.....	.....	.....	.....	.....	31.3	7.33	2.20	0.87
10,000	1,960	.....	.....	.....	.....	.....	.....	.....	.....	.....	.....	.....	.....	38.6	9.05	2.72	1.06
11,000	2,165	.....	.....	.....	.....	.....	.....	.....	.....	.....	.....	.....	.....	46.7	10.9	3.29	1.28
12,000	2,362	.....	.....	.....	.....	.....	.....	.....	.....	.....	.....	.....	.....	55.5	13.0	3.90	1.51
13,000	2,560	.....	.....	.....	.....	.....	.....	.....	.....	.....	.....	.....	.....	.....	15.2	4.58	1.77
14,000	2,750	.....	.....	.....	.....	.....	.....	.....	.....	.....	.....	.....	.....	.....	17.7	5.32	2.07
15,000	2,945	.....	.....	.....	.....	.....	.....	.....	.....	.....	.....	.....	.....	.....	20.3	6.10	2.36
16,000	3,144	.....	.....	.....	.....	.....	.....	.....	.....	.....	.....	.....	.....	.....	23.1	6.95	2.70
18,000	3,530	.....	.....	.....	.....	.....	.....	.....	.....	.....	.....	.....	.....	.....	29.2	8.80	3.42
20,000	3,940	.....	.....	.....	.....	.....	.....	.....	.....	.....	.....	.....	.....	.....	36.2	10.8	4.22
22,000	4,330	.....	.....	.....	.....	.....	.....	.....	.....	.....	.....	.....	.....	.....	43.7	13.2	5.12
24,000	4,724	.....	.....	.....	.....	.....	.....	.....	.....	.....	.....	.....	.....	.....	51.9	15.6	5.92
26,000	5,120	.....	.....	.....	.....	.....	.....	.....	.....	.....	.....	.....	.....	.....	.....	18.3	7.15
28,000	5,500	.....	.....	.....	.....	.....	.....	.....	.....	.....	.....	.....	.....	.....	.....	21.3	8.3
30,000	5,890	.....	.....	.....	.....	.....	.....	.....	.....	.....	.....	.....	.....	.....	.....	24.4	9.5

***For longer or shorter lengths of pipe the friction loss is proportional to the length, *i.e.*, for 500 ft. one-half of the above; for 4,000 ft., four times the above, etc.**

TABLE D. — LOSS OF AIR PRESSURE DUE TO FRICTION
(In PSI in 1000 Ft. Pipe*, 60 Lb. Gauge Initial Pressure)

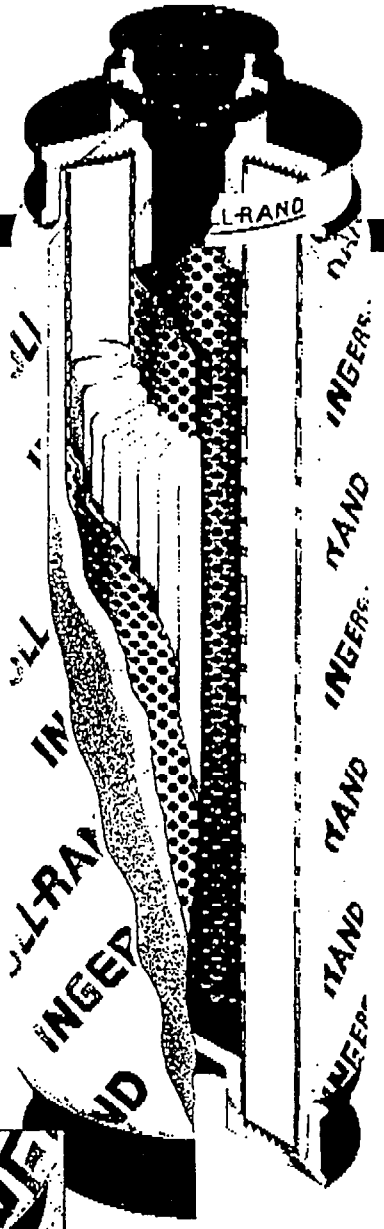

The CHE Series of coalescing filters remove liquid oil and water aerosols and fine particulate matter to the lowest practical levels.

All CHE Series filters include exclusive, pleated filtration media designed to...

- remove liquid aerosols down to 0.001 ppm by weight and particulate matter to 0.01 micron.
- deliver filtration efficiency exceeding 99.9999% D.O.P.
- have a very low wetted pressure drop of 3 psi/0.21 bar thereby reducing operating costs.
- increase filtration surface area resulting in long element life and reduced maintenance costs.

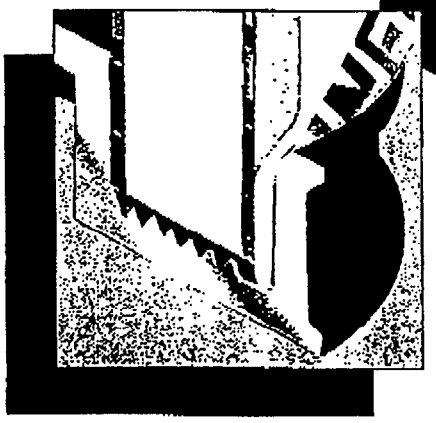

The PC Series of coalescing/particulate filters remove liquid oil and water aerosols and particulate matter to levels suitable for general purpose applications.

All PC Series filters feature ...

- **Exclusive, pleated filtration** media to remove liquid aerosols down to 0.5 ppm by weight and particulate matter to 1 micron.
- **Filtration efficiency** exceeding 99.99% D.O.P.
- **Low wetted pressure** drop of 2 psi/0.14 bar (1 psi/0.07 bar clean & dry) to minimize operating costs.

All CHE and PC Series filters also include a ...

- **Patent pending, element drain layer to quickly** channel liquid out of the element for improved efficiency.
- **Patent pending, lower end cap to increase** the coalesced droplet size to prevent re-entrainment of separated liquids into the air stream.

LENGTH OF STRAIGHT PIPE IN FEET HAVING THE SAME PRESSURE LOSS AS THE TABULATED FITTING

Be Sure to Read Notes on Page 85

Nominal Pipe Size Inches	Schedule Number	Inside Diameter		Globe Valve*	Angle Valve*	Gate Valve*	Swing Check* Valve**	Plug Cock*	45° Std. Elbow	90° Std. Elbow	90° Long Radius Elbow	Standard Tee		Close Return Bend	90° Welding Elbow	
												Run of Tee	Side Outlet		Short Radius	Long Radius
		Inches	Feet	L/D = 340	L/D = 145	L/D = 13	L/D = 135	L/D = 18	L/D = 16	L/D = 30	L/D = 20	L/D = 20	L/D = 60	L/D = 50		
½	40	0.622	0.0518	17.6	7.5	.67	7.0	.93	.83	1.55	1.04	1.04	3.11	2.59		
¾	40	0.824	0.0685	23.3	9.9	.89	9.2	1.23	1.10	2.06	1.37	1.37	4.11	3.43		
1	40	1.049	0.0872	29.7	13.6	1.14	11.8	1.57	1.40	2.62	1.74	1.74	5.2	4.36	1.4	1.1
1½	40	1.610	0.134	45.5	19.4	1.74	18.1	2.41	2.14	4.02	2.68	2.68	8.1	6.7	2.1	1.6
2	40	2.067	0.172	59	25.0	2.24	23.2	3.10	2.75	5.2	3.44	3.44	10.3	8.6	2.8	2.1
2½	40	2.469	0.206	70	29.9	2.68	27.8	3.70	3.30	6.2	4.12	4.12	12.4	10.3	3.3	2.5
3	40	3.068	0.256	87	37.1	3.32	34.6	4.60	4.10	7.7	5.1	5.1	15.4	12.8	4.1	3.1
4	40	4.026	0.335	114	48.5	4.35	45.2	6.0	5.4	10.1	6.7	6.7	20.1	16.8	5.4	4.0
5	40	5.047	0.420	143	61	5.5	57	7.6	6.7	12.6	8.4	8.4	25.2	21.0	6.7	5.1
6	40	6.065	0.505	172	73	6.6	68	9.1	8.1	15.1	10.1	10.1	30.3	25.3	8.1	6.1
8	40	7.981	0.665	226	96	8.7	90	12.0	10.7	19.9	13.3	13.3	40.0	33.3	11	8.0
10	40	10.020	0.836	284	121	10.9	113	15.0	13.4	25.1	16.7	16.7	50.2	41.8	13	10
12	40	11.938	0.995			13.0	134	17.9	15.9	29.8	19.9	19.9	60	50	16	12
14	30	13.250	1.104			14.3	149		17.7	33.2	22.1	22.1	66	55	18	13
16	30	15.250	1.270			16.5	171		20.3	38.2	25.4	25.4	76	64	20	15
18	30	17.124	1.430			18.6	193		22.8	43.2	28.6	28.6	86	72	23	17
20	20	19.250	1.600			20.8	216		25.6	48.0	32.0	32.0	96	80	25	19
24	20	23.250	1.940			25.2	262		31.0	58	38.8	38.8	117	97	30	23

*All valves and cocks to be fully open.
**Check valves require 0.50 psi pressure loss to open fully.
Welding elbow data from Midwest Piping Catalog 61 (1961).
L/D values from Crane Co. Technical Paper No. 410 (1957). Both L and D in feet.

PRESSURE LOSS IN POUNDS FOR EACH 100 FEET OF STRAIGHT PIPE

Be Sure to Read Notes on Page 85

Nominal Pipe Size	CFM Free Air	Line Pressure — PSIG													
		10	15	20	30	40	50	75	100	125	150	200	250	300	350
½" SCHEDULE 40	10		1.45	1.24	.96	.79	.67	.48	.38	.31	.26	.20	.16	.14	.12
	15			2.68	2.08	1.70	1.43	1.04	.81	.67	.57	.43	.35	.30	.25
	20				3.60	2.94	2.48	1.80	1.41	1.15	.98	.75	.61	.51	.44
	30						5.40	3.90	3.05	2.50	2.12	1.63	1.32	1.11	.96
	40							6.80	5.31	4.37	3.70	2.84	2.30	1.94	1.67
	50								8.20	6.75	5.70	4.37	3.55	2.99	2.58
	60								11.7	9.61	8.16	6.25	5.08	4.27	3.68
	80										14.4	11.0	8.95	7.52	6.50
	100											17.1	13.9	11.7	10.1
¾" SCHEDULE 40	10	.42	.35	.30	.23	.19	.16	.12							
	20	1.57	1.31	1.12	.87	.71	.60	.43	.34	.28	.24	.18	.15	.12	.11
	35			3.22	2.50	2.04	1.72	1.25	.98	.80	.68	.52	.42	.35	.31
	50				4.95	4.05	3.42	2.47	1.93	1.59	1.35	1.03	.84	.71	.61
	65						5.71	4.12	3.23	2.65	2.25	1.72	1.40	1.18	1.01
	80							6.19	4.74	3.98	3.37	2.58	2.10	1.76	1.52
	100							9.60	7.53	6.40	5.25	4.02	3.26	2.74	2.37
	125								11.7	9.70	8.12	6.22	5.05	4.25	3.67
	150									12.6	11.5	8.85	7.16	6.03	5.20
	200											15.6	12.6	10.6	9.14
	250												19.7	16.6	14.3

in. x 25.4 = mm; cfm x 0.02832 = m³/ min; psi x 6.895 = kPa; psi loss/100 ft x 6.786 = kPa loss/30 m

3/13

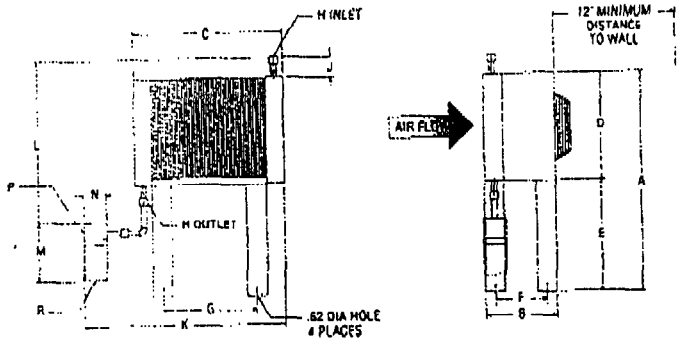

Model	A	B	C	D Approx	E	F	G	H NPT	J	*K Approx	*L Approx	M	OPTIONAL SEPARATOR N	P NPT	R	RECOMMENDED OPTIONAL SEPARATOR MODEL NUMBER
AA-35	46.50	14.75	30.50	22.50	24.00	10.75	19.09	1.00	4.00	41.12	34.50	10.00	4.62	1	¼	S-100M or AD
AA-50																
AA-65											35.00					
AA-80								1.50								
AA-100			43.50				32.09			54.12						S-200M
AA-120										64.20	37.10	12.10	4.70	1		
AA-150											36.80					
AA-240	49.50		47.63	25.50				2.00		58.33	40.60			1½		S-300M
AA-300	55.50		51.88	31.50			36.09			62.38	49.60					

*Dimension will vary depending on the separator model used and the piping between the separator and cooler.

MAX. SCFM @ 5, 10, 15 and 20°F Approach

INLET TEMP. °F		150				200				250				300				350				RECOMMENDED OPTIONAL SEPARATOR MODEL NUMBER
APPROACH TEMP. °F		5	10	15	20	5	10	15	20	5	10	15	20	5	10	15	20	5	10	15	20	
AFTERCOOLER MODEL NUMBER	AA-35	25	42	58	73	18	31	43	53	15	25	35	44	13	22	30	37	11	19	26	32	S-100M or AD
	AA-50	34	58	79	99	25	43	59	74	21	36	50	62	18	31	42	52	16	27	36	47	
	AA-65	42	73	99	125	32	55	77	95	27	47	65	81	24	41	57	71	22	37	52	65	
	AA-80	50	87	119	150	40	69	94	117	34	59	80	100	30	52	71	89	28	47	65	82	
	AA-100	60	102	140	177	48	81	112	140	43	73	100	124	38	64	87	110	34	59	81	100	
	AA-120	81	138	190	235	61	105	142	177	51	87	120	150	43	75	102	127	40	69	94	116	S-200M
	AA-150	92	160	220	270	73	125	172	215	63	110	150	187	55	95	130	160	50	86	120	148	
	AA-240	160	275	380	425*	120	207	285	355	100	175	240	300	84	145	204	250	78	135	185	231	S-300M
	AA-300	184	318	440	480*	145	250	345	430	125	217	300	375	110	190	257	320	100	175	240	300	

Above specifications are based on 80 to 125 PSIG operating pressures.
Maximum pressure drop, less than 3 psi.
*Maximum ratings restricted by pressure drop. actual thermal capacities are higher.
A flexible metal hose must be properly installed between the compressor and aftercooler to validate warranty.

Model	Fan CFM	Motor H.P.	Standard Motor (ODP) Voltage	Standard Motor (ODP) Full Load Amps/Motor	Optional Motor (TEFC) Voltage	Optional Motor (TEFC) Full Load Amps/Motor	Optional Motor (TEFC) Voltage	Optional Motor (TEFC) Full Load Amps/Motor	Approximate Shipping Weight (lbs.)
AA-35	1375	¼	115/1/60	7.2	115/208 230/1/60	5/2.6-2.8	208-230/ 460/3/60	1.4-1.3/.65	110
AA-50									
AA-65									120
AA-80									
AA-100	2450								140
AA-120									
AA-150	2350								145
AA-240	4600	¼ (2)							200
AA-300	4700								300

Standard Motor(s) = 1600 RPM, Custom Frame, Equipped with Thermal Overload. Optional Motor(s) = 1725 RPM, Nema 48 Frame, No Thermal Overload.
Published electrical ratings are approximate and may vary because of motor brand. Actual ratings are on motor nameplate.

UPA SERIES

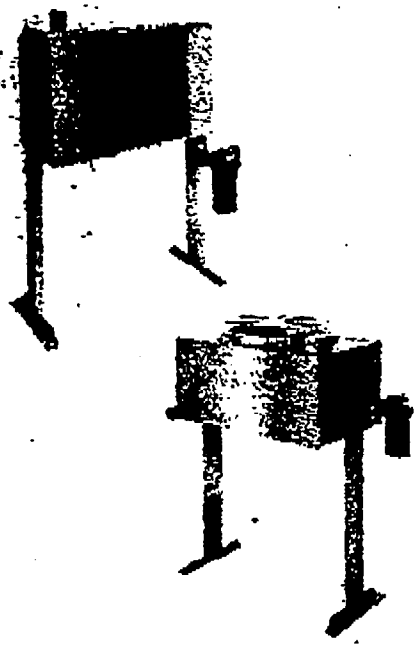

AA SERIES

AHP SERIES

COMPRESSED AIR AND GAS

AFTERCOOLERS

THERMAL TRANSFER PRODUCTS, LTD

UPA SERIES

SPECIAL FEATURES

- Horizontal or vertical air flow
- Lightweight, may be shipped UPS
- Ratings based on comprehensive testing
- Attractive, durable baked enamel finish
- Floor or suspended mounting
- Competitively priced

MATERIALS OF CONSTRUCTION

Cabinet: Steel with baked enamel finish

Core: Aluminum fins on copper tubes

Fan: Heavy gauge aluminum with steel hub

Motor: Open vented

Fan Guard: Zinc Chromate Plated Steel

AA SERIES

SPECIAL FEATURES

- Horizontal air flow
- Optional weatherproof junction box
- Floor or suspended mounting
- Optional TEFC motor(s)
- Ratings based on comprehensive testing
- Wired for single point external connection

MATERIALS OF CONSTRUCTION

Cabinet: Galvanized steel

Core: Aluminum fins on copper tubes

Fan: Heavy gauge aluminum with steel hub

Motor: Open vented

Fan Guard: Steel with baked enamel finish

AHP SERIES

SPECIAL FEATURES

- Vertical air flow
- High technology compact design
- Optional air motor
- Rugged heavy duty construction
- Excellent for heat recovery

MATERIALS OF CONSTRUCTION

Legs: Steel with baked enamel finish

Core: Aluminum

Fan: Aluminum hub, polypropylene blades

Shroud: Painted steel

Motor: TEFC

Fan Guard: Steel with baked enamel finish

PRESSURE AND TEMPERATURE RATINGS FOR ALL MODELS

Maximum Operating Pressure.....250 PSIG

Maximum Operating Temperature.....350°F

TECH-SERVICES TEL: Jul 10'97 13:59 No.021 P.03/04

SILVAN INDUSTRIES Inc.

2121 Cleveland Avenue
Marinette, Wisconsin 54143
(715) 735-9311

10/13

Industrial Air Receiver Tanks

Silvan supplies Industrial Air Receiver Tanks in two basic designs. Both are designs for A.S.M.E. approved tanks, manufactured from mild carbon steel, shot blasted to commercial tolerance and provided with a primer paint coating. They are available in these configurations:

- *Diameters from 24 to 72 inches*
- *Capacities from 125 to 3,750 gallons*
- *Tank only (91 Series)*
- *Tank with 12 inch base ring (92 Series)*

How to order:

*Each type of tank carries a **Silvan Stock Number.** For example, **92-54-1550-125** The **92** indicates a 92 Series tank (supplied with a 12 inch base ring) . . . the **54** refers to the tank's diameter in inches . . . the **1550** indicates the tank's capacity in gallons . . . and the **125** means the tank is rated for a working pressure of 125 pounds per square inch.*

To order, simply select the tank diameter that meets your requirements, check to see what capacities are available with the diameter you've chosen, select Design 'A' or 'B', or 'C', and determine how you want your tank supplied . . . tank only (91 Series) or with base ring (92 Series). Once you've made your selection, call Silvan at 800-AIR-TANK and give us the Silvan Stock Number, quantity and shipping information for the tanks you want. We'll do the rest.

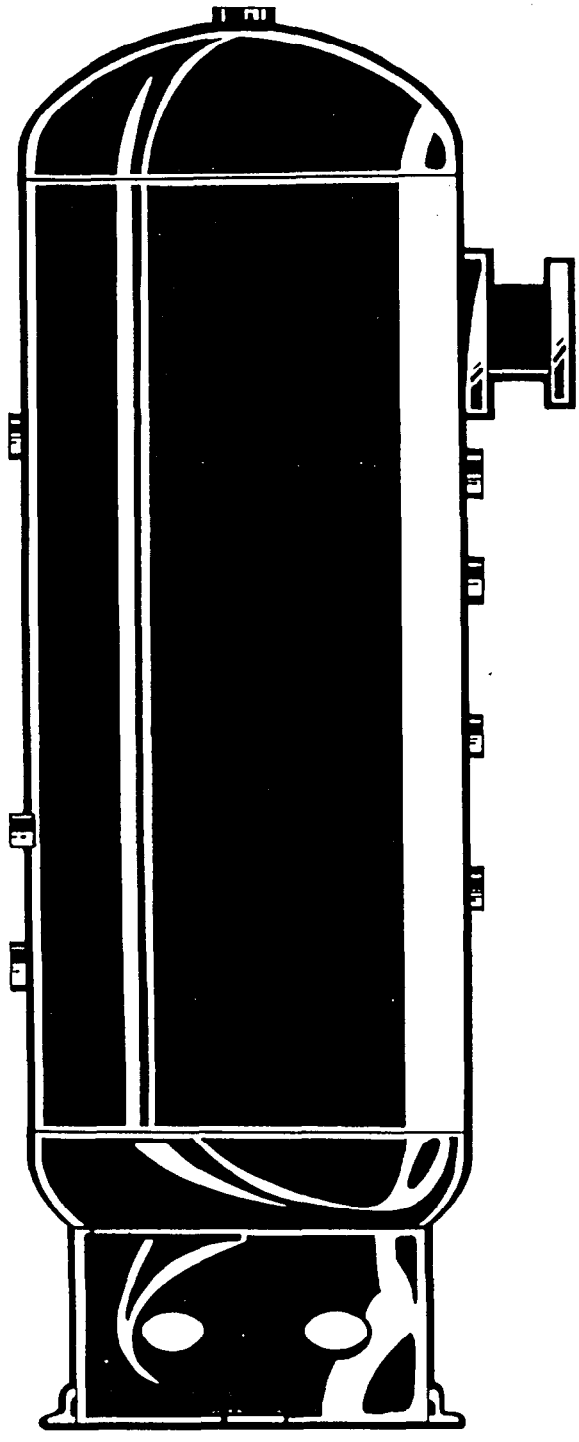

For all your stock and custom tank requirements, call Silvan first . . . 800-AIR-TANK. In Wisconsin . . . 800-472-1006.

Manufacturers of Tanks and Code Pressure Vessels . . . D.O.T. Tanks • Halon Vessels • Oil Separators • Air Receivers

Industrial Air Receiver Tanks

11/13

	Nominal Dimensions: Inches									N.P.T. Openings						Nom. Cap. Gals.	Work. Pres. P.S.I.	Catalog Number
	Dia.	T.L.	B.C.	B	C	D	E	F	G	H	J	K	L	M	N			
A	24	68¼		58	16	13½	15	15 9/16	9½	3	1	¼	¾	1	½	125	150	91-24-125-150
		68¼	16½	58	16	13½	15	15 9/16	9½	3	1	¼	¾	1	½	125	150	92-24-125-150
	36	92		77	21	29¾	14	13¼	13	3	1	¼	1	1	½	400	137	91-36-400-137
		92	21½	77	21	29¾	14	13¼	13	3	1	¼	1	1	½	400	137	92-36-400-137
	36	92		75¾	20¾	30	14	13¼	13	3	½	¼	1½	1	½	400	200	91-36-400-200
		92	21½	75¾	20¾	30	14	13¼	13	3	½	¼	1½	1	½	400	200	92-36-400-200
B	42	113		93⅝	26⅛	13½	13½	32⅞	41⅛	3	¾	¾		1	2	620	150	91-42-620-150
		113	35	93⅝	26⅛	13½	13½	32⅞	41⅛	3	¾	¾		1	2	620	150	92-42-620-150
	48	144		114⅝	29⅝	17	17	38⅛	45¾	6" 150#	¾	¾		1	2	1040	150	91-48-1040-150
		144	42	114⅝	29⅝	17	17	38⅛	45¾	6" 150#	¾	¾		1	2	1040	150	92-48-1040-150
	54	168		127	45½	25	20	41	41	6" 150#	¾	2		1	2	1550	150	91-54-1550-150
		168	42	127	45½	25	20	41	41	6" 150#	¾	2		1	2	1550	150	92-54-1550-150
	60	192		152½	45½	38	25	41	41	6" 150#	¾	2		1	2	2200	150	91-60-2200-150
		192	42	152½	45½	38	25	41	41	6" 150#	¾	2		1	2	2200	150	92-60-2200-150
	66	216⅝	54	164 9/16	56 9/16	36	25	47¾	47¾	8" 150#	¾	2		1	2	3000	150	92-66-3000-150
	72	229¾	54	180	60	40	30	50	50	8" 150#	¾	2		1	2	3750	150	92-72-3750-150
C	24	65	16½	8 15/16	22 9/16	24 9/16	47 13/16			2	1½	¼	¾	1	1½	120	200	92-24-120-200
	30	74	21½	11½	24½	26½	51			2	2	¼	¾	1	1½	200	200	92-30-200-200
	30	83¾	21½	12½	30¼	28½	59¾			2	2	¼	¾	1	1½	240	200	92-30-240-200

A

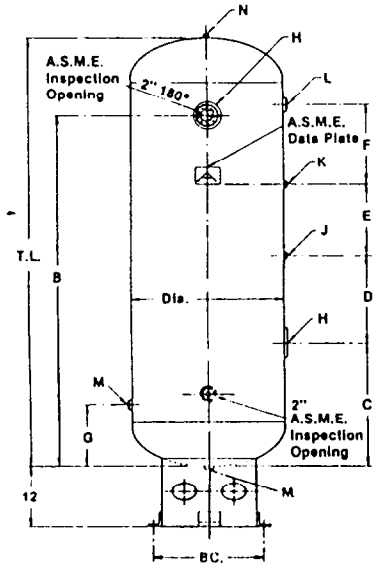

B

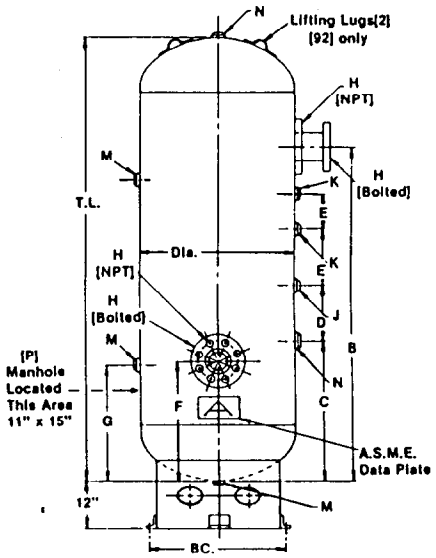

C

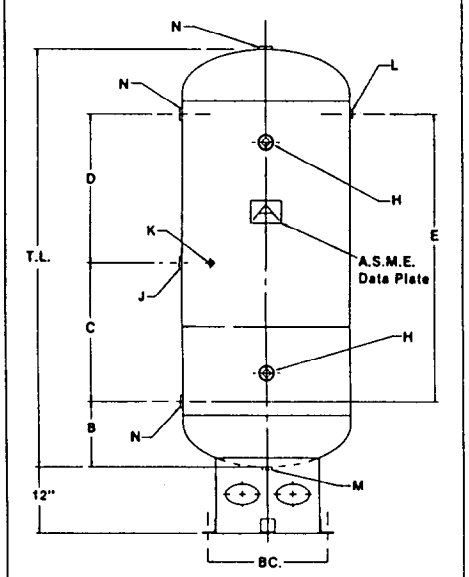

All industrial air receivers are available less ring base (91) or complete as illustrated (92). (93) 6" ht. base ring optional.

12/13

DIRECT DRIVE COMPRESSOR SPECIFICATIONS

DIMENSIONS		QSLP 30	QSLP 60	QSLP 100	QSLP 125	QSLP 150
LENGTH	IN.	84	84	90	96	96
	mm	2,137	2,137	2,290	2,438	2,438
WIDTH	IN.	48	48	48	58	58
	mm	1,219	1,219	1,220	1,473	1,473
HEIGHT	IN.	67	67	63	82	82
	mm	1,701	1,701	1,600	2,083	2,083
SHIPPING WEIGHT		2,675 lbs	2,675 lbs	3,975 lbs	5,960 lbs	5,960 lbs
		1,216 kg	1,216 kg	1,807 kg	2,709 kg	2,709 kg
PERFORMANCE						
ACFM @ 30 PSIG		245	500	717	1,000	---
ACFM @ 38 PSIG		242	496	712	---	992
Motor HP		30	60	100	125	150
BHP @ 30 PSIG		25	60	88	128	---
BHP @ 38 PSIG		31	66	96	---	145
MAX PSIG Full Load		40	38	42	35	42

BELT DRIVEN COMPRESSOR SPECIFICATIONS

DIMENSIONS		QSLP 10	QSLP 15	QSLP 20
LENGTH	IN.	65	65	65
	mm	1,651	1,651	1,651
WIDTH	IN.	34	34	34
	mm	864	864	864
HEIGHT	IN.	46	46	46
	mm	1,168	1,168	1,168
SHIPPING WEIGHT		960 lbs	960 lbs	980 lbs
		436 kg	436 kg	445 kg
PERFORMANCE				
ACFM @ 40 PSIG Full Load		83	124	166
Maximum Modulated Pressure		50	50	50
Motor Horsepower		10	15	20
BHP @ 40 PSIG		11	16.5	22
Compressor R.P.M.		1,600	2,400	3,200
Minimum Full Load Pressure		35	35	35

For more information on the QSLP, call your local distributor or call the Quincy Air Line, 217-222-7700.

Quincy
Compressor Division

Quincy Quality

Coltec Industries

Quincy. Undeniably the world's finest compressors.

Member Compressed Air and Gas Institute CAGI

We reserve the right to change specifications without liability, without advance notice, and without incurring any obligation for products previously or subsequently sold.
©1994 Quincy Compressor. All rights reserved. Litho in USA (SL-0001 7/94)

13/13

Coltec Industries

Quincy Compressor Division

QSLP Low Pressure Compressor

Oil Flooded - Helical Screw - Single Stage

FEATURES:

- Designed with Latest Screw Compressor Technology
- Complete Package From the Factory
- Minimal Maintenance Required (Eliminates Costly Downtime)
- 100,000+ Hour L-10 Bearing Life
- Automatically Regulates Output to Demand
- Low Unloaded Horsepower
- Direct Drive Ductile Iron Rotors
- Air Cooled Oil Cooler
- Quiet Running
- Discharge Air Temperature of 210º F or Less
- More Efficient than 2-Stage Blowers

INSTRUMENT PANEL INCLUDES:

- % Capacity Gauge
- Discharge Air/Oil Temperature Gauge
- Reservoir Air Pressure Gauge
- Hourmeter
- Service Indicators for: Lubricant Filter, Inlet Filter & Separator Element

OPTIONAL EQUIPMENT:

- Different Voltages
- Water Cooled Cooling
- NEMA 4 Electrical System
- Cabinet Enclosures

STANDARD :

- Standard NEMA Frame-sized, 460 Volt, 3 Phase, 60 Hertz Main Drive Motor, 1800 RPM or 3600 RPM
- Full Voltage Magnetic Starter, Mounted and Wired
- Positive Displacement Lubricant Pump
- Auto-Dual Control for Efficient Operation
- Heavy -Duty Dry-Type Inlet Filter
- Full Flow, 10 Micron Lubricant Filter
- Factory Fill of Quin-Syn Synthetic Lubricant

SAFETY DEVICES:

- UL Approved Electrical System
- High Pressure Unload Switch
- Safety Relief Valve
- High Temperature Shutdown System
- Control Line Filtration
- Power On Light

TYPICAL APPLICATIONS:

- Printing
- Aeration
- Glass Making
- Chemical Transportation
- Textile Equipment
- Pharmaceutical Processes
- Most Low Pressure Conveying Processes

GERAGHTY & MILLER, INC.
Environment and Infrastructure
a heidemij company

SUBJECT: AOC-1 SVE Design
PROJECT: Q Area Drum Storage
CLIENT/PROJECT NO: TF0992 001

BY: DCP DATE:
CHKD: DATE:
REV: DATE:

PAGE
SHEET 1/16

Objective: Size Piping and Blower for SVE System at AOC-1

Given:
Data from Pilot Study
Recovery of 168 cfm with 11" WC at well head
ROI estimated at 75'
SVE and Sparge well Layout provided by OHM (See Attached)
SVE system utilizes 14 SVE wells
Anticapated total Air flow of 14 * 168 = 2,352 cfm
Friction Loss chart, EG&G Rotron

Calculations:

A) Calculate pressure losses through recovery system

1) From pilot study, 168 cfm Air flow with ROI of 75' when 11" WC of Vacuum at well head
System requires at well head of **11" WC**

2) Pressure drop in recovery piping, assume worst case
(see attached diagram for system Layout and assumed worst case)
Start with 6" ID PVC pipe at well 1 and calc. ΔP

A) from well 1 to 2, 168 cfm travels approx 80'
from chart 0.014 "WC/ft loss * 80' = 1.12" WC

B) from well 2 to 3 336 cfm travels approx 80'
from chart 0.014" WC loss/ft * 80' = 1.12" WC

Continued

c) from well 3 to 4, 504 cfm travels approx 100'
from chart 0.019 "WC loss/ft * 100' = 1.9" WC

D) from well 5 to 4, 168 cfm travels approx 100'
from chart 0.014" WC loss/ft * 100' = 1.4" WC

E) from well 4 to 6, 672 cfm travels approx 100'
from chart 0.034 "WC loss/ft * 100' = 3.4" WC

f) from well 6 to 7, 840 cfm travels approx 80'
from chart 0.054 "WC loss/ft * 80' = 4.3 "WC

g) from well 7 to 8, 1008 cfm travels approx 120'
from chart 0.082" WC loss/ft * 120' = 9.84" WC

h) from well 8 to equipment pad, 1,176 cfm travels 30'
from chart 0.092" WC/ft * 30' = 2.76" WC

I) Assume up to (10) 90° elbows throughout system
from Table below chart 15' Equivant ft for each Elbow
10 elbows * 15'/Elbow = 150' EL
from chart at 1,176 cfm, 0.092" WC/ft * 150' = 13.8" WC

Total ΔP through piping = 1.12"WC + 1.12"WC + 1.9"WC + 1.4"WC + 3.4"WC + 4.3"WC + 9.84"WC + 2.76" WC + 13.8"WC = 39.6"WC or 2.9"Hg

for 6" ID PVC pipe
Try 8" ID PVC pipe

Continued

Try same worst case using 8" ID PVC Pipe, same flow rates and distances as 6" ID calculation

A) 1.12" WC
B) 1.12" WC
C) 1.12" WC
D) 1.12" WC
E) 1.12" WC
F) 1.12" WC
G) 2.5" WC
h) 0.8" WC
I) 4.8" WC

Total ΔP = **14.8" WC or 1.1" Hg**
for 8" ID PVC pipe

3) Pressure drop through Moisture Knockout Tank, from Robert Nosun, Nosun Engineering and Lamson Blower Rep. ΔP through correct sized tank of approx 0.5" Hg

0.5" Hg or 6.8" WC

4) Pressure drop through Silencer on discharge, from attached spec sheet Pressure drop minimal, ∴ Assume 5" WC

5" WC

5) Total ΔP through system using 6" ID PVC pipe

ΔP = 11" WC + 39.6" WC + 6.8" WC + 5" WC = 62.4" WC or 4.6" Hg

6) Total ΔP through system using 8" ID PVC Pipe

ΔP = 11" WC + 14.8" WC + 6.8" WC + 5" WC = 37.6" WC or 2.7" Hg

Continued

7) Assume 25% design factor to account for misc. fittings and unforseen Conditions

ΔP, 6" ID system = 5.75 "Hg at 2,352 cfm

ΔP, 8" ID system = 3.38" Hg at 2,352 cfm

8) Based on Lamson 850 Blower curve attached, a reduction in Vacuum using 8" ID results in an approx 14 BHP reduction.

If the reduction in HP is realized over one year

14 HP * 8,448 hrs/yr * 1 Year = 118,272 HP hours or 88,195 KW hours

Assume \$0.08/KWhr Realized savings over one year

\$ 0.08/KWhr * 88,195 KWhr = \$ 7,055.6/yr

Based on yearly savings select 8" ID PVC pipe for VES recovery System and Lamson 852-GD Blower

PRODUCT DATA

LAMSON
CORPORATION
SYRACUSE, N.Y. 13221

Allied Products Department

Standard Performance Curves

"850" EXHAUSTER - 1001 IMPELLER

BAROMETER: 29.92" HG. (760 mm.)
INLET TEMP.: 68° F. (20° C.)
SPEED : 3550 R.P.M.

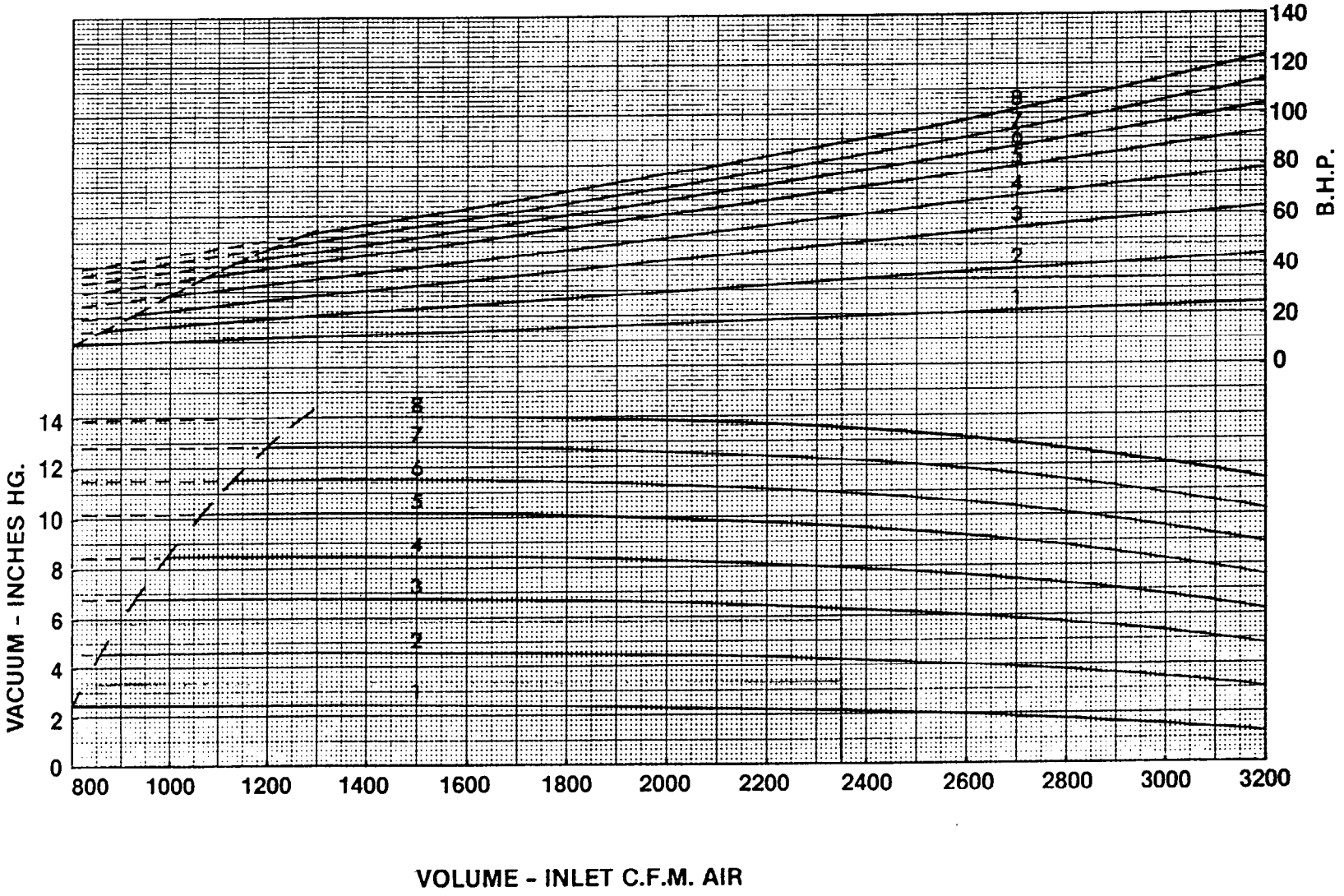

6/16

PRODUCT DATA

LAMSON
CORPORATION
SYRACUSE, N.Y. 13221

Allied Products Department

Blowers/ Exhausters

Technical Data
"850" Series

Design

Air or gas.
Number of stages
1 through 8 . . . . . (@ 60 Hz. 3550 Rpm).
1 through 9 . . . . . (@ 50 Hz. 2950 Rpm).
Inlet or outlet driven . . . . . (inlet standard).
Inlet connection . . . . . 8" flange, matches 125# ANSI.
Outlet connection . . . . . 8" flange, matches 125# ANSI.
Operating speed . . . . . 3550 RPM.
Maximum casing pressure . . . . . 20.0 PSIG.
Seals (air) . . . . . labyrinth type.
Shaft seal (gas) . . . . . stuffing box type standard. Special seals available.
Bearings . . . . . ball, life per AFBMA spec. #B-10.
Lubrication
Stages 1 through 7 . . . . . grease standard, oil optional.
Stages 8 and 9 . . . . . oil only.
Impeller diameter 24.0 (609.6)
Impeller tip speed . . . . . 22,550 FPM.
First critical speed . . . . . 4720 RPM.
Direct drive . . . . . standard. Shaft diameter at coupling 1.875 (47.63).
Indirect drive . . . . . non-standard (V-belts and sheaves). Center distance—36.13 (917.7).
Vibration tolerance . . . . . 1.25 mils measured in vertical plane at top of bearing housings.

Unit Weights & Inertia Data			
Stage	Weight Machine & Base		WK²
1	1370	(622.7)	12.2
2	1730	(786.4)	22.4
3	2090	(950.0)	32.5
4	2450	(1113.6)	42.6
5	2810	(1277.3)	52.8
6	3170	(1440.9)	62.9
7	3530	(1604.5)	73.0
8	3890	(1764.5)	83.2

Capacities

To 3200 SCFM @ 12.6 PSIG (peak of blower curve) or to 3200 CFM @ 14.0" Hg. (peak of exhauster curve).

Materials of Construction

Casing . . . . . cast iron ASTM #20 inlet head, outlet head and intermediate sections.
Bearing housings . . . . . cast iron with bronze insert.
Bearing caps & oil reservoirs . . . . . cast iron.
Tie rods . . . . . cold rolled steel.
Labyrinth seals . . . . . cast iron with babbitt insert.
Joint sealing compound . . . . . RTV #102.
Baffle rings . . . . . cold rolled steel, chrome plated standard. Special material available.
Shaft . . . . . high grade hot rolled shaft steel.
Impellers . . . . . cast aluminum alloy.
Base . . . . . structural steel.
Motor pedestal . . . . . formed steel.

Miscellaneous

Finish . . . . . blue-green enamel.
Base pads . . . . . molded synthetic rubber 0.25 (6.4) thick compressed x variable area.
Noise level . . . . . in compliance with OSHA standards when machine is fully piped up (certified tests available).

Notes:
1. Dimensions given in inches and (mm). Weights given in lbs. and (kg).
2. Specifications subject to change without notice.

7/16

PRODUCT DATA

LAMSON
CORPORATION
SYRACUSE, N.Y. 13221

Allied Products Department

Blowers/ Exhausters

☐ Approval Only ☐ Certified Correct

Date _____ Signed _____

Project _____

Your Order No. _____

Our Order No. _____

"810" and "850" Series Gas Inlet Driven Direct Drive — Dimensions

Dimensions are in inches and (mm)

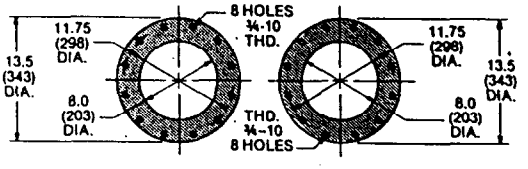

(End view of machine only)

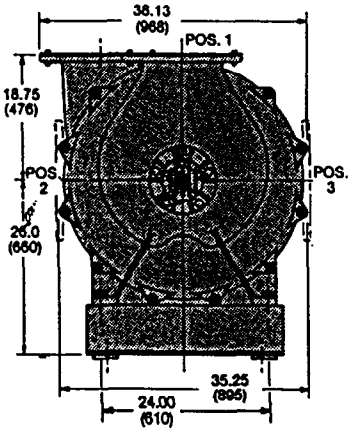

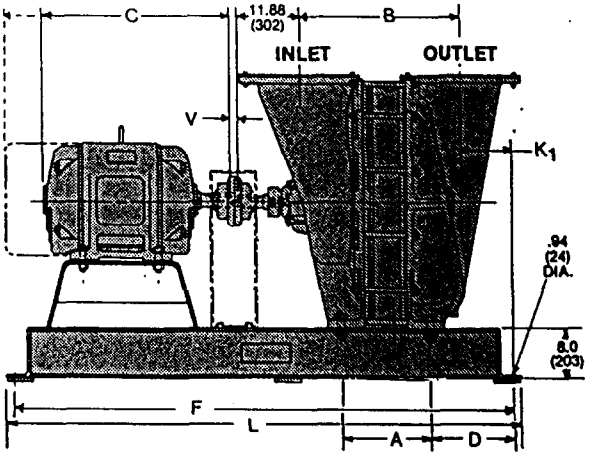

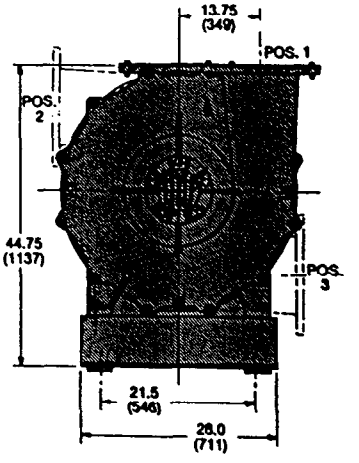

Frame No.	Dimensions							
	A	B	C	D	F	L	K_1	V
811, 851	7.13 (181)	11.56 (294)	284TS	7.0 (178)	57 (1448)	60 (1524)	6.06 (154)	1 (25)
812, 852	11.25 (286)	15.69 (398)	326TS	7.0 (178)	63 (1600)	66 (1676)	6.06 (154)	1 (25)
813, 853	15.38 (391)	19.81 (503)	365TS	7.0 (178)	70 (1778)	73 (1854)	6.06 (154)	1 (25)
814, 854	19.50 (495)	23.94 (608)	405TS	11.13 (283)	83 (2108)	86 (2184)	10.19 (259)	1 (25)
815, 855	23.63 (600)	28.06 (713)	444TS	7.0 (178)	83 (2108)	86 (2184)	6.06 (154)	1 (25)
816, 856	27.75 (705)	32.19 (818)	445TS	11.13 (283)	97 (2464)	100 (2540)	10.19 (259)	1.25 (32)
817, 857	31.88 (810)	36.31 (922)	445TS	7.0 (178)	97 (2464)	100 (2540)	6.06 (154)	1.25 (32)
818, 858	36.00 (914)	40.44 (1027)	445TS	7.0 (178)	102 (2591)	105 (2667)	6.06 (154)	1.25 (32)

NOTES:

1. Column "C" lists maximum NEMA motor frame typically required for the machine indicated.
2. Dimension "V" is maximum distance between shafts for stock couplings.
3. Flange dimensions conform to 125 pound ANSI cast iron flanged fittings.
4. See sheets #35.21.01 and #35.21.03 for Air machine prices. See sheet #35.21.02 for Gas machine prices.
5. Specifications subject to change without notice.

CAD File: 17260-A20

LEGEND

- REPRESENTS RADIUS OF INFLUENCE OF SVE WELL (EACH CIRCLE REPRESENTS ONE SVE WELL)
- AIR SPARGE WELL
- BAKER ENVIRONMENTAL INC. (AREA OF REMEDIATION)
- ENVIRONMENTAL SCIENCE AND ENGINEERING, INC. (AREA OF REMEDIATION)

REQUIRED NUMBER OF AS AND SVE WELLS

	BAKER	ESE
AIR SPARGE	8	22
SOIL VAPOR EXTRACTION	2	14

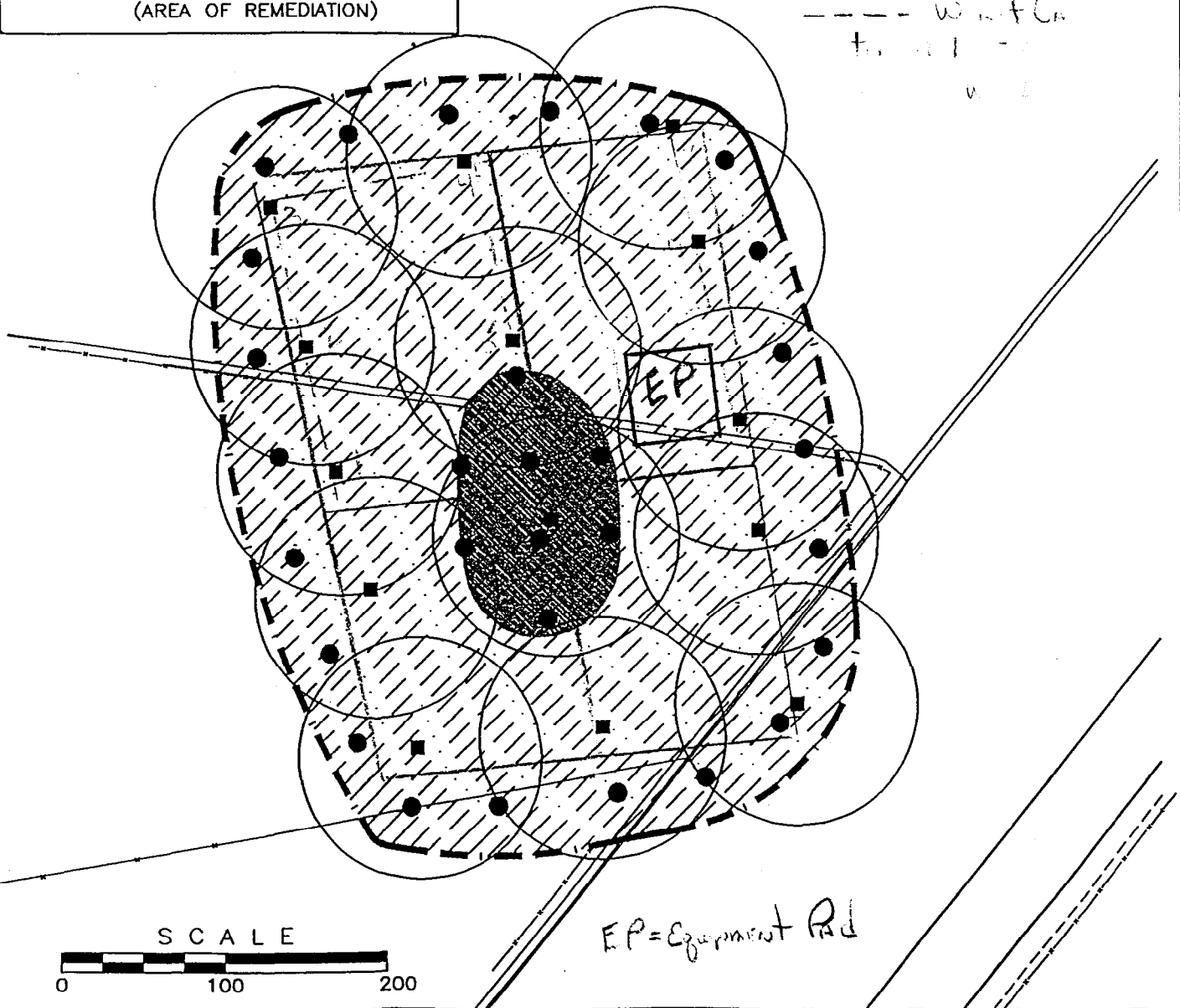

Plot Scale: 1 = 100' revision 0

OHM Remediation Services Corp.

OHM Project No. 17260

Drawn By:	Checked By:	Approved By:
D. Leech	A. Westerbaan	P.Tully
Date: 4/29/97	Scale: AS SHOWN	Drawing No. 17260-A20

ESTIMATED NUMBER OF AIR SPARGE AND SOIL VAPOR EXTRACTION WELLS NECESSARY FOR REMEDIAL EXPANSION OF AOC-1

Q-AREA DRUM STORAGE YARD

PREPARED FOR

NORFOLK NAVAL BASE
NORFOLK, VIRGINIA

9/16

Application/Engineering

Friction Loss Per Foot of Tubing

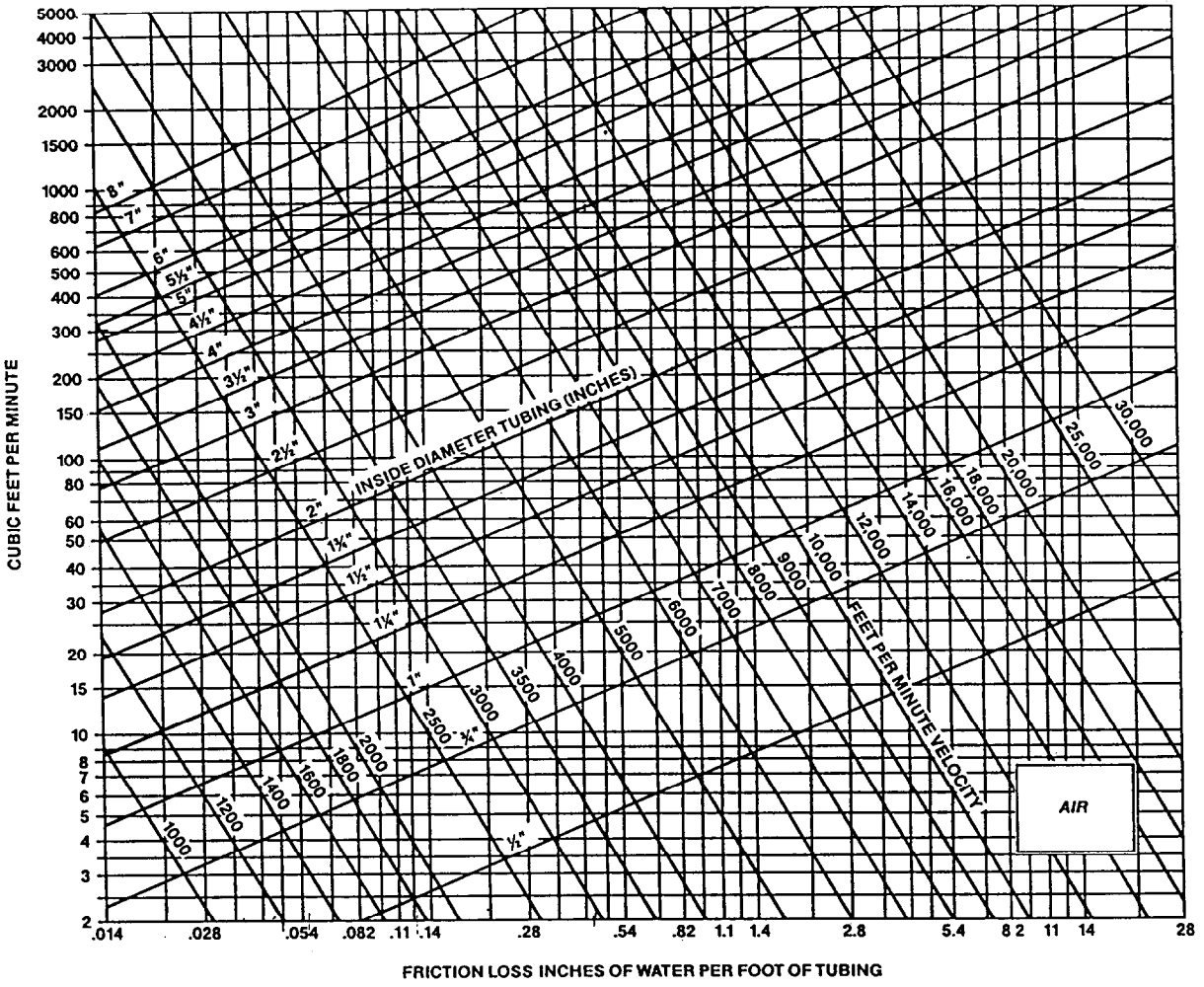

Friction Loss in Fittings

To calculate friction loss in fittings use chart below. This chart will yield equivalent lengths (in feet) of tubing. Use this length with graph above to find friction loss in inches of water column.

NOMINAL PIPE SIZE (INCHES)	EQUIVALENT TUBING LENGTH (FEET)	
	90° EL	45° EL
1¼	3	1.5
1½	4	2
2	5	2.5
2½	6	3
3	7	4
4	10	5
5	12	6
6	15	7.5
8	20	10

10/16

LAMBERT FABRICATORS INC.	PRODUCT DATA SOIL REMEDIATION ACCESSORIES

WATER SEPARATOR ASSEMBLY

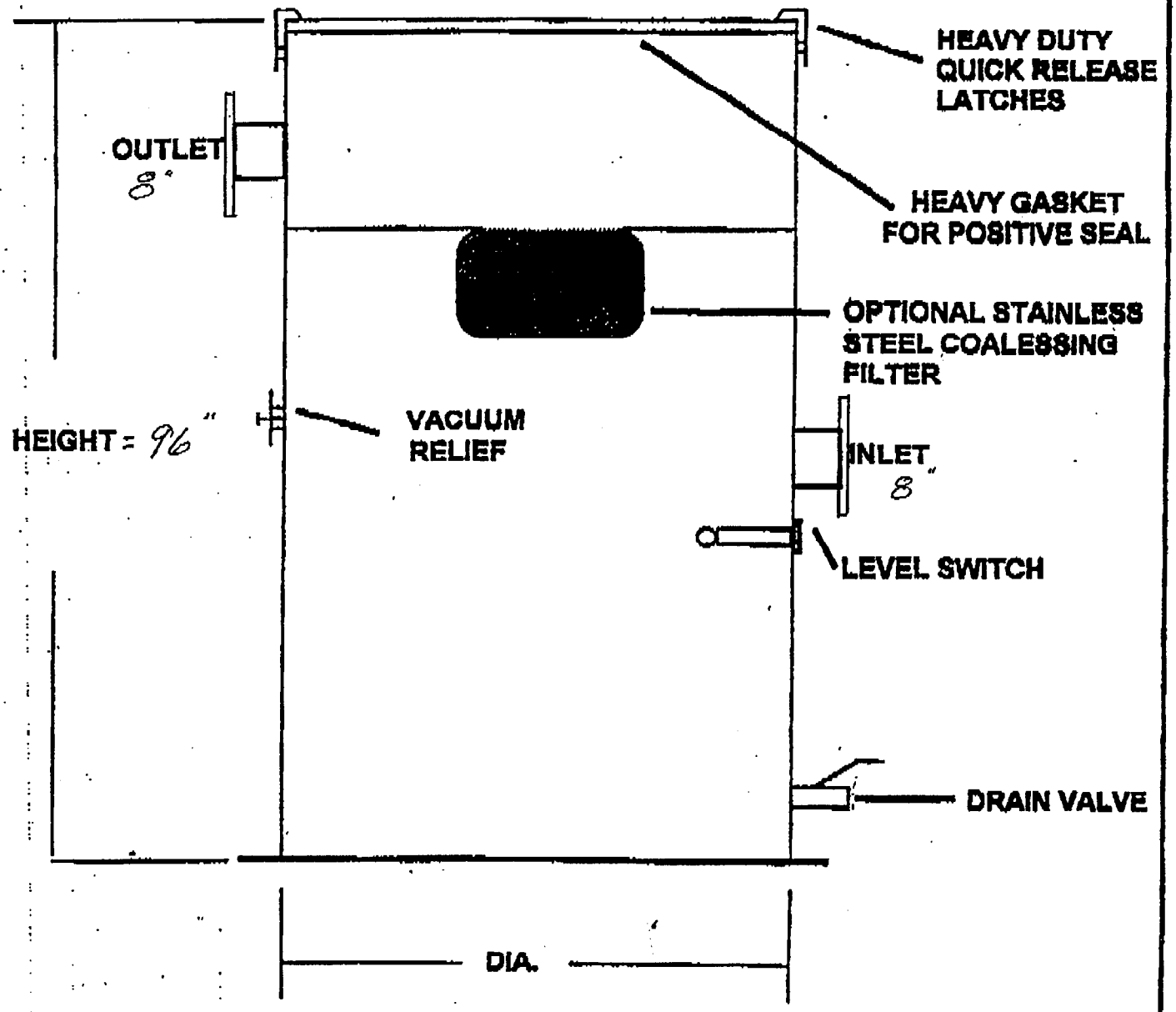

COMPLETE SPECIFICATIONS ON REVERSE

.5" Hg

JUN-27-'97 FRI 09:14 ID:NOSUN ENG SALES INC TEL NO: 941 646-6752 #630 P01

11/16

Post-it® Fax Note **7672**

No. of Pages 1 Today's Date 6/27/97 Time

To David Page

From Bob Nosun

Company Geraghty & Miller

Company

Location

Location Dept. Charge

F 3 961 2599 Telephone #

Fax # Telephone #

Comments David,

2500 ICFM would probably be an 8" exhauster connection, possibly a 12". Use an LES-80 if 8", LES-120 if 12".

Bob Nosun

Original Disposition: ☐ Destroy ☐ Return ☐ Call for pickup

PRODUCT DATA

1 Lamson Street • P.O. Box 4867 • Syracuse, New York 13221 • Ph 315-433-5500 • Fax 315-433-5451

LAMSON corporation

Dynamic Innovation Since 1880

CENTRIFUGAL AIR SYSTEMS

ACCESSORIES

☐ For Approval ☐ Certified For

Project

Your Order #

Our Order # By

SILENCERS

DESIGN
Air flows straight through perforated tube surrounded by acoustic absorption material packed at a controlled density to achieve silencing. The heavy exterior shell retains the acoustic pack and reflects noise back into it to maximize noise attentuation. Pressure drop is minimal. Silencer can be installed either vertically or horizontally.

CONSTRUCTION
All welded heavy gauge sheet steel shell. Connections are either N.P.T. or plate flanges drilled to match 125# ANSI flanges. Exterior finish is high grade primer.

Standard acoustical material is hairfelt for operating temperatures below 240°F. Other acoustical materials available. Special mounting brackets are available at extra cost.

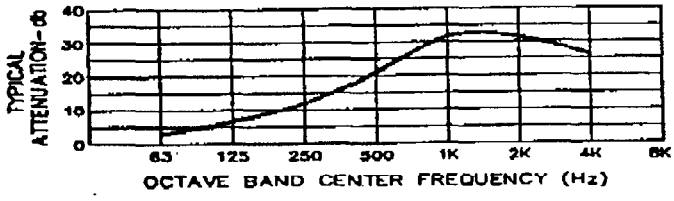

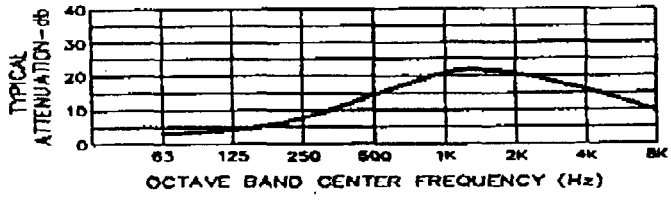

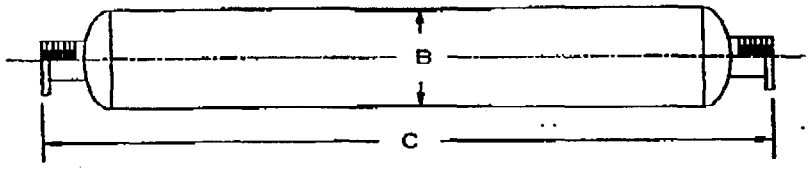

PART NUMBER	MODEL NUMBER	CONNECTION SIZE & TYPE	DIMENSIONS B	DIMENSIONS C	APPROX. WEIGHT
757322-AAO	LES-10	1" NPT (25.4)	3.25 (8.26)	16.0 (406.4)	4.0 (1.8)
757322-ABO	LES-15	1.5" NPT (38.1)	4.5 (114.3)	23.0 (584.0)	8.0 (3.6)
757322-ACO	LES-20	2" NPT (50.8)	5.0 (127.0)	34.5 (876.3)	13.0 (5.9)
757322-ADO	LES-25	2.5" NPT (63.5)	6.0 (152.4)	35.5 (901.7)	18.0 (8.2)
757322-AEO	LES-30	3" NPT (76.2)	6.5 (165.1)	43.5 (1104.9)	28.0 (12.7)
757322-AFO	LES-40M	4" NPT (101.6)	10.0 (254.0)	53.0 (1346.2)	55.0 (24.9)
757322-FAO	LES-40	4" FLG (101.6)	10.0 (254.0)	53.0 (1346.2)	55.0 (24.9)
757322-FBO	LES-50	5" FLG (127.0)	12.0 (304.8)	56.0 (1422.4)	70.0 (31.6)
757322-FCO	LES-60	6" FLG (152.4)	12.0 (304.8)	66.0 (1676.4)	90.0 (40.8)

PART NUMBER	MODEL NUMBER	CONNECTION SIZE & TYPE	DIMENSIONS B	DIMENSIONS C	APPROX. WEIGHT
757322-FDO	LES-80	8" FLG (203.2)	14.0 (355.6)	58.0 (1473.2)	138.0 (62.6)
757322-FEO	LES-100	10" FLG (254.0)	16.0 (406.4)	70.0 (1778.0)	160.0 (72.6)
757322-FFO	LES-120	12" FLG (304.8)	18.0 (457.2)	80.0 (2032.0)	250.0 (113.4)
757322-FGO	LES-140	14" FLG (355.6)	20.0 (508.0)	92.0 (2336.8)	300.0 (136.1)
757322-FHO	LES-160	16" FLG (406.4)	22.0 (558.8)	107.0 (2717.8)	340.0 (154.2)
757322-FJO	LES-180	18" FLG (457.2)	24.0 (609.6)	116.0 (2946.4)	650.0 (294.8)
757322-FKO	LES-200	20" FLG (508.0)	26.0 (660.4)	128.0 (3251.2)	705.0 (319.8)

Notes:
1. Dimensions given in inches and (mm). Weights given in lbs. and (kg).
2. Specifications subject to change without notice.

12/16

PRODUCT DATA

LAMSON
CORPORATION
SYRACUSE, N.Y. 13221

ALLIED PRODUCTS DEPARTMENT

ACCESSORIES

☐ For Approval ☐ Certified For

Project _____
Your Order # _____
Our Order # _____ By _____

Filters, Dry Type Radial Fin-Felted Media

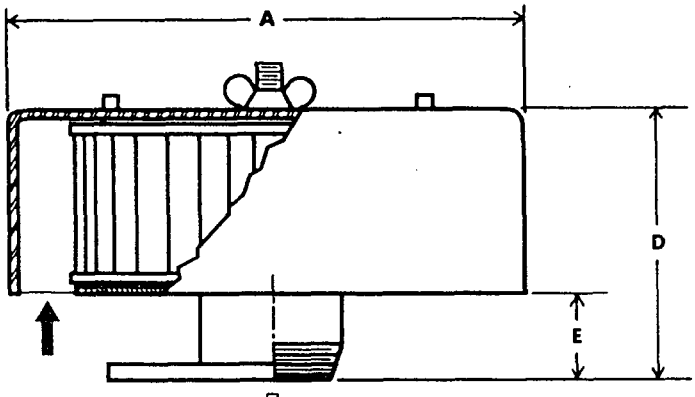

Models LMN-C611 Thru LMN-C623

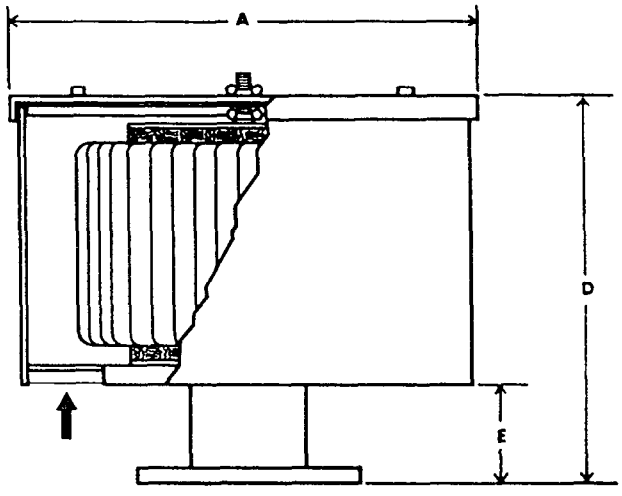

Models LMN-C625 Thru LMN-C633

Model Number	Capacity		Connection		Dimensions			Approx. Weight
	CFM	M³/Min.	Size	Type	A	D	E	
LMN-C611	100	2.8	2.0 (50.8)	M	7.5 (191)	6.25 (159)	3.25 (83)	4.0 (1.8)
LMN-C613	200	5.7	2.5 (63.5)	M	7.5 (191)	6.25 (159)	3.25 (83)	6.0 (2.7)
LMN-C615	300	8.5	3.0 (76.2)	M	10.0 (254)	7.25 (184)	3.25 (83)	10.0 (4.5)
LMN-C617	450	12.7	4.0 (101.6)	M	12.0 (305)	7.25 (184)	3.25 (83)	130.0 (5.9)
LMN-C619	700	19.8	5.0 (127.0)	Flg.	12.0 (305)	7.25 (184)	3.25 (83)	20.0 (9.1)
LMN-C621	1000	28.3	6.0 (152.4)	Flg.	16.0 (406)	7.75 (197)	3.75 (95)	23.0 (10.4)
LMN-C623	2000	56.6	8.0 (203.2)	Flg.	20.0 (508)	12.0 (305)	4.0 (102)	54.0 (24.5)
LMN-C625	3000	85.0	10.0 (254.0)	Flg.	21.5 (546)	16.75 (425)	5.25 (133)	111.0 (50.4)
LMN-C627	4000	113.3	12.0 (304.8)	Flg.	21.5 (546)	16.75 (425)	5.25 (133)	132.0 (59.9)
LMN-C629	6000	169.9	14.0 (355.6)	Flg.	25.5 (648)	24.13 (613)	3.75 (95)	155.0 (70.3)
LMN-C631	7000	198.2	16.0 (406.4)	Flg.	28.0 (711)	24.13 (613)	3.75 (95)	175.0 (79.4)
LMN-C633	10000	283.2	18.0 (457.2)	Flg.	28.0 (711)	24.13 (613)	3.75 (95)	190.0 (86.2)

CONSTRUCTION:

1. Replaceable, cleanable elements are of radial fin cartridge design. The standard felted polyester medium offers 10 micron solids retention at 98% efficiency with low pressure drop. For particle retention down to 0.3 microns, special media are available.
2. All models are furnished with a rugged weather hood which provides built-in protection from rain or snow in outdoor service. Standard housings are carbon steel protected by a rust preventative primer coating beneath a durable all-weather paint. Alternate housing materials available.

NOTES:

1. Pressure drop indicators are available.
2. Connections designated "M" are male NPT.
3. Connections designated "Flg." are plate flanges with ½ the number of standard ANSI bolt holes. The bolt circle matches ·125#-150# standard flange drilling.
4. Dimensions are given in inches and (mm). Weights are given in pounds and (kg).

Specifications subject to change without notice.

PRODUCT DATA

LAMSON
CORPORATION
SYRACUSE, N.Y. 13221

ALLIED PRODUCTS DEPARTMENT

ACCESSORIES

AMMETEF CASE MOUNTED
DIMENSIONS & SCHEMATIC

☐ APPROVAL ONLY
☐ CERTIFIED CORRECT

PROJECT: _____

SIGNED _____ YOUR ORDER NO. _____

DATE _____ OUR ORDER NO. _____

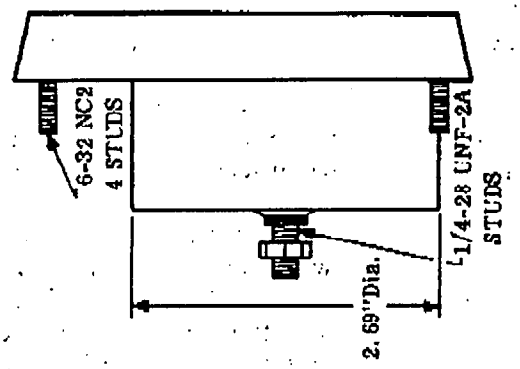

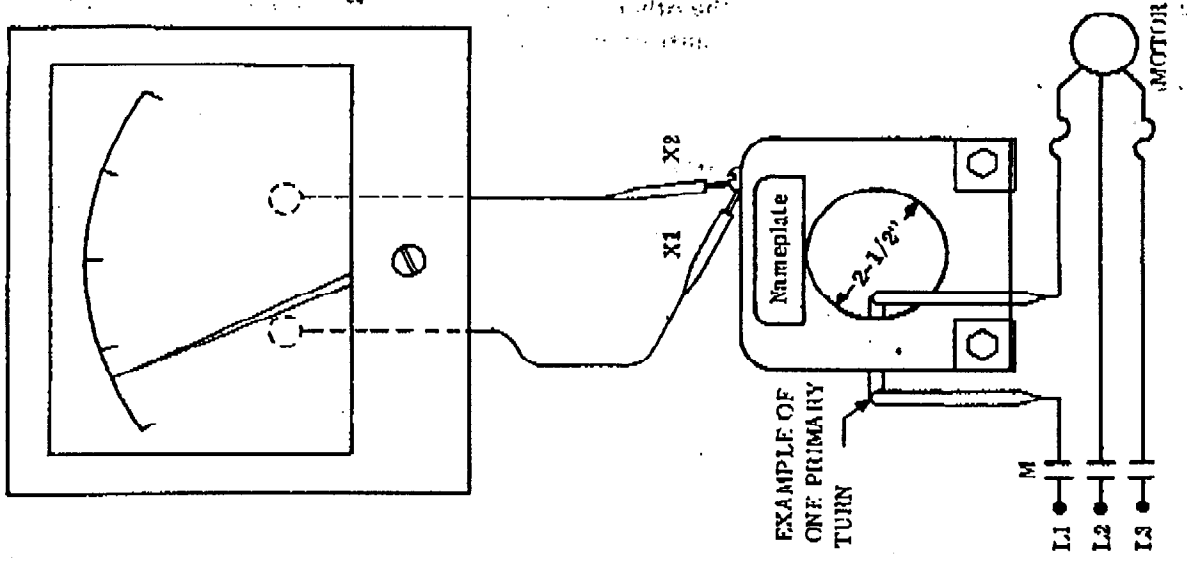

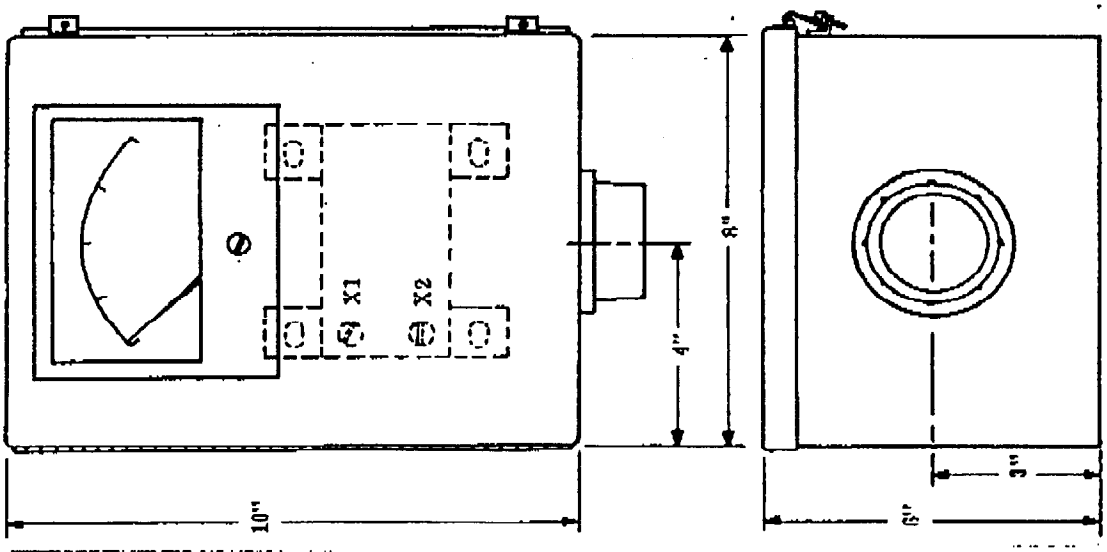

14/16

PRODUCT DATA

LAMSON CORPORATION
SYRACUSE, N.Y. 13221

ALLIED PRODUCTS DEPARTMENT

ACCESSORIES

SURGE PROTECTION DEVICE

It is a characteristic of centrifugal machines to surge at low volumes. This phenomenon is harmful and will cause bearing failure if allowed to continue for any length of time. The fluctuation in differential pressure typical of surge is also detrimental to the process in some instances.

Where system demand is likely to decrease unexpectedly the device herein described will automatically shut down the machine before it can go into surge. This feature is particularly desireable for installations where the equipment will operate unattended for prolonged periods.

SCHEMATIC

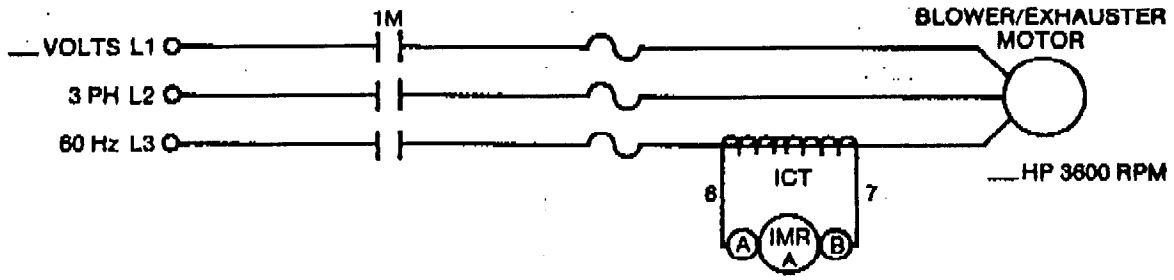

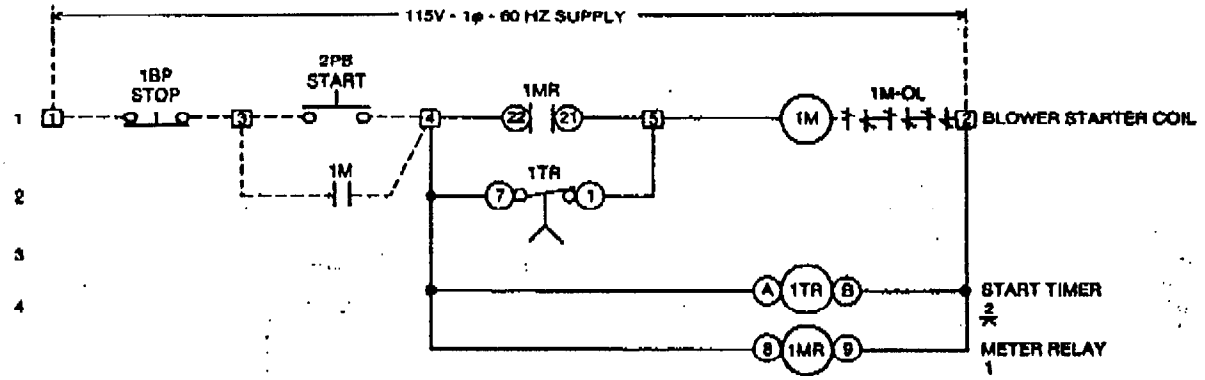

SEQUENCE OF OPERATION

Pressing start button energizes motor starter, 1M, closing all 1M contacts and energizing the blower/exhauster motor. When motor current exceeds 1MR setpoint, 1MR contact closes to hold 1M energized when 1TR timed contact opens. When motor current drops into the surge region (below setpoint) 1MR contact opens de-energizing motor starter 1M shutting down the blower/exhauster.

Note: Verification of C/T ratio and turns required is on data sticker located top of meter case.

15/16

ALLIED PRODUCTS DEPARTMENT

ACCESSORIES

LAMSON
CORPORATION
SYRACUSE, N.Y. 13221

PRODUCT DATA

ENCLOSURE: NEMA 12 with 1½" F.N.P.T. conduit hub. Bomac Part No. 3651-6.

AMMETER: Simpson "Rugged Seal" Environmental Resistant calibrated in (CFM) (AMPS) (CFM & AMPS)

CURRENT TRANSFORMER: G. E. type JCH-O having a ratio of . Transformer requires primary turns and (adding) (subtracting) secondary turns operating on volts.

NOTE: Wiring shown is example when no secondary turns are required. When secondary turns are indicated connect as noted below:

TO SUBTRACT SECONDARY TURNS, connect a conductor to the secondary terminal with the X_1 polarity mark and pass it through the transformer window from the side with the H_1 polarity mark.

TO ADD SECONDARY TURNS, connect a conductor to the secondary terminal with the X_1 polarity mark and pass it through the transformer window from the side marked with the H_2 polarity mark. In either case, the conductor connected to the other secondary terminal should be connected directly to the ammeter without going through the transformer window.

NOTES:

1. See Sheet 35.23.23 for prices.
2. Specifications subject to change without notice.

16/16

ALLIED PRODUCTS DEPARTMENT

ACCESSORIES

LAMSON
CORPORATION
SYRACUSE, N.Y. 13221

PRODUCT DATA

SUB PANEL LAYOUT

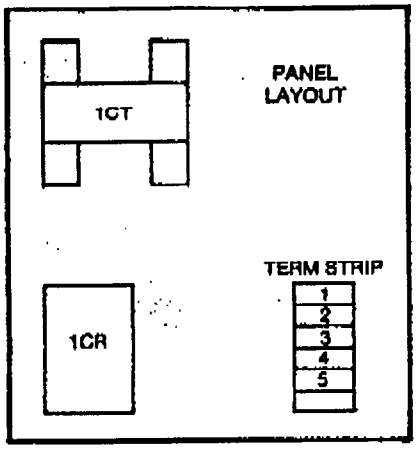

NEMA 12 ENCLOSURE

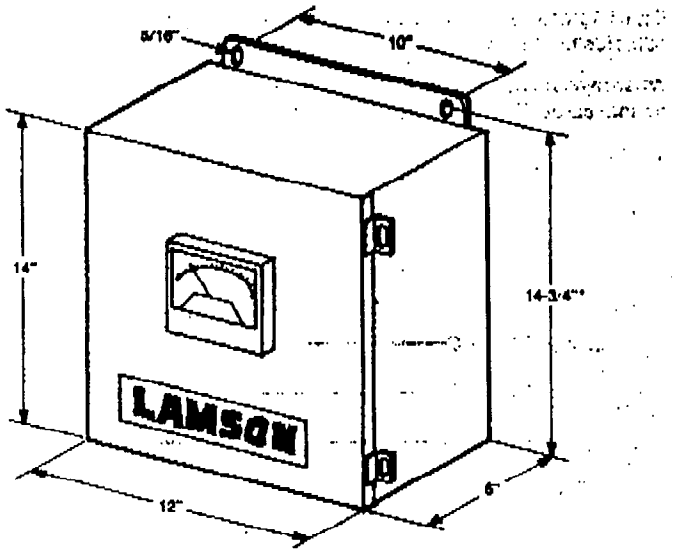

COMPONENT LIST

SYMBOL	REQD.	DESCRIPTION
1CT	1	CURRENT TRANSFORMER____:5 RATIO REQUIRES _____PRIMARY TURNS
1MR	1	METER RELAY
1TR	1	SOLID STATE TIMER .2-30 SEC.
ENCL.	1	14" x 12" x 6" NEMA 12
PANEL	1	SUB-PANEL

☐ Approval ONLY ☐ Certified CORRECT

DATE_____SIGNED _____

PROJECT _____

YOUR ORDER NO. _____

OUR ORDER NO. _____

1. Special enclosure as well as CFM calibrated meter relay available at nominal extra charge.
2. Meter relay setpoint may be positioned at the factory or in the field.
3. See Sheet 35.23.23 for prices.
4. Specifications subject to change without notice.

GERAGHTY & MILLER, INC.
Environment and Infrastructure
a heidemij company

SUBJECT: AOC-2 SVE Design
PROJECT: Q Area Drum Storage
CLIENT/PROJECT NO: TF0992.001

BY: DCP DATE:
CHKD: DATE:
REV: DATE:

PAGE
SHEET 1/17

Objective: Size piping and Blower for SVE System at AOC-2

Given: Data from Pilot Study
Recovery of 168 cfm with 11" WC at wellhead
ROI estimated at 75'
SVE and Sparge well Layout on Drawing (Attached)
Layout of wells to creat SVE and sparge wall along Decatur Ave
SVE system utilizes 10 wells
Anticapated total flow of 10 wells at 168 cfm/well = 1,680 cfm
Friction loss chart and table, EG&G Rotron (Attached)
SVE wells spaced at Approx 75' intervals to allow for overlap.

Calculations:

A) Calculate pressure losses through recovery system

1) From pilot study, 168 cfm air flow with ROI of 75' when 11" WC vacuum at wellhead.
System requires at wellhead = 11" WC

2) Pressure drop in recovery header, Assume main recovery line to Blower placed in middle of VES header so that 5 VES wells are located on each side of header. See attached drawing. ∴ Recovery flow and vacuum equal on each side of main recovery line.
Calculate pressure drop from far end of VES header back to main recovery line. To start use 6" ID PVC pipe

Continued

A) 168 cfm from VES-1 travels approx 75' to VES-2
from chart 0.014 "WC loss/ft * 75' = 1.05" WC

B) 336 cfm from VES-2 travels 75' to VES-3
from chart 0.014 "WC loss/ft * 75' = 1.05" WC

C) 504 cfm from VES-3 travels 75' to VES-4
from chart 0.019" WC loss/ft * 75' = 1.4" WC

D) 672 cfm from VES-4 travels 75' to VES-5
from chart 0.032" WC loss/ft * 75' = 2.4" WC

E) 840 cfm from VES-5 to main recovery line = 37.5'
from chart 0.055" WC loss/ft * 37.5' = 2.06" WC

ΔP = 1.05" WC + 1.05" WC + 1.4" WC + 2.4" WC + 2.06" WC

$\boxed{\Delta P = 7.96\text{" WC}}$

Now Assume 8" ID PVC pipe for VES header A → E

A) 0.014" WC/ft * 75' = 1.05" WC
B) 0.014" WC/ft * 75' = 1.05" WC
C) 0.014 WC/ft * 75' = 1.05" WC
D) 0.014" WC/ft * 75' = 1.05" WC
E) 0.016" WC/ft * 37.5' = 0.6" WC

Continued

Total ΔP in header, 8" ID

$\boxed{\Delta P = 4.8\text{"WC}}$

3) Pressure drop in main recovery Line from VES header to Equipment Pad. Assume Approx 50'

Total flow of all 10 VES wells, 1,680 cfm travels 50' in 6" ID pipe

from chart 0.21 "WC loss/ft * 50' = $\boxed{10.5\text{"WC}}$

Now Assume 8" ID recovery Line

from chart 0.041 "WC loss/ft * 50' = $\boxed{2.05\text{"WC}}$

4) Pressure drop through moisture knockout tank, from Robert Nosen, Nosen Engineering, Lamson Blower rep. ΔP through properly sized tank Approx $\boxed{0.5\text{" Hg}}$ or $\boxed{6.8\text{"WC}}$

5) Pressure drop through Silencer on discharge, from Attached spec sheet ΔP minimal ∴ Assume 5" WC $\boxed{5\text{"WC}}$

6) Assume up to (10) 90° Elbows in system for total flow of 1,680 cfm from Rotron EL table below chart (Attached)

6" ID pipe 90° EL = 15' * 10 elbows for total EL of 150'

8" ID pipe 90° EL = 20' * 10 elbows for 200' EL

Continued

for 6" ID, 1,680 cfm at 150'

from chart 0.21 "WC loss/ft * 150' = **31.5" WC**

for 8" ID, 1,680 at 200'

from chart 0.041 "WC/ft * 200' = **8.2" WC**

7) Total ΔP through system using all 6" ID pvc pipe

ΔP = 11" WC + 7.96" WC + 10.5" WC + 6.8" WC + 5" WC + 31.5" WC

ΔP = 73" WC or 5.4" Hg

Add 25% design factor for unforseen conditions.

ΔP = 6.8" Hg

Total ΔP through system using 6" ID VE SHEADER and 8" ID main recovery Line

ΔP = 11" WC + 7.96" WC + 2.05" WC + 6.8" WC + 5" WC + 8.2" WC

ΔP = 41" WC or 3.0" Hg Add 25% DF **3.75" Hg**

Total ΔP through system using 8" ID pvc for All pipe

ΔP = 11" WC + 4.8" WC + 2.05" WC + 6.8" WC + 5" WC + 8.2" WC

ΔP = 37.9 WC or 2.8" Hg Add 25% = **3.5" Hg**

GERAGHTY & MILLER, INC.
Environment and Infrastructure
a heidemij company

SUBJECT: AOC-2 SVE Design
PROJECT: Q Area Drum Storage
CLIENT/PROJECT: NO: TF0992.001

BY: DCP DATE:
CHKD: DATE:
REV: DATE:

PAGE
SHEET 5/17

Based on Estimated vacuum and flow rates use Lamson Blower Lamson 810 Exhauster

∴ If recovery system utilizes 6" ID PVC pipe for main header and 8" ID PVC pipe used for main recovery Line a savings of one Blower stage and 8 HP will be realized.

Select Lamson 813-GD Exhauster for AOC-2

PRODUCT DATA

LAMSON
CORPORATION
SYRACUSE, N.Y. 13221

Allied Products Department

Standard Performance Curves

6/17

BAROMETER: 29.92" HG. (760 mm.)
INLET TEMP.: 68° F. (20° C.)
SPEED : 3550 R.P.M.

"810" EXHAUSTER - 1003 IMPELLER

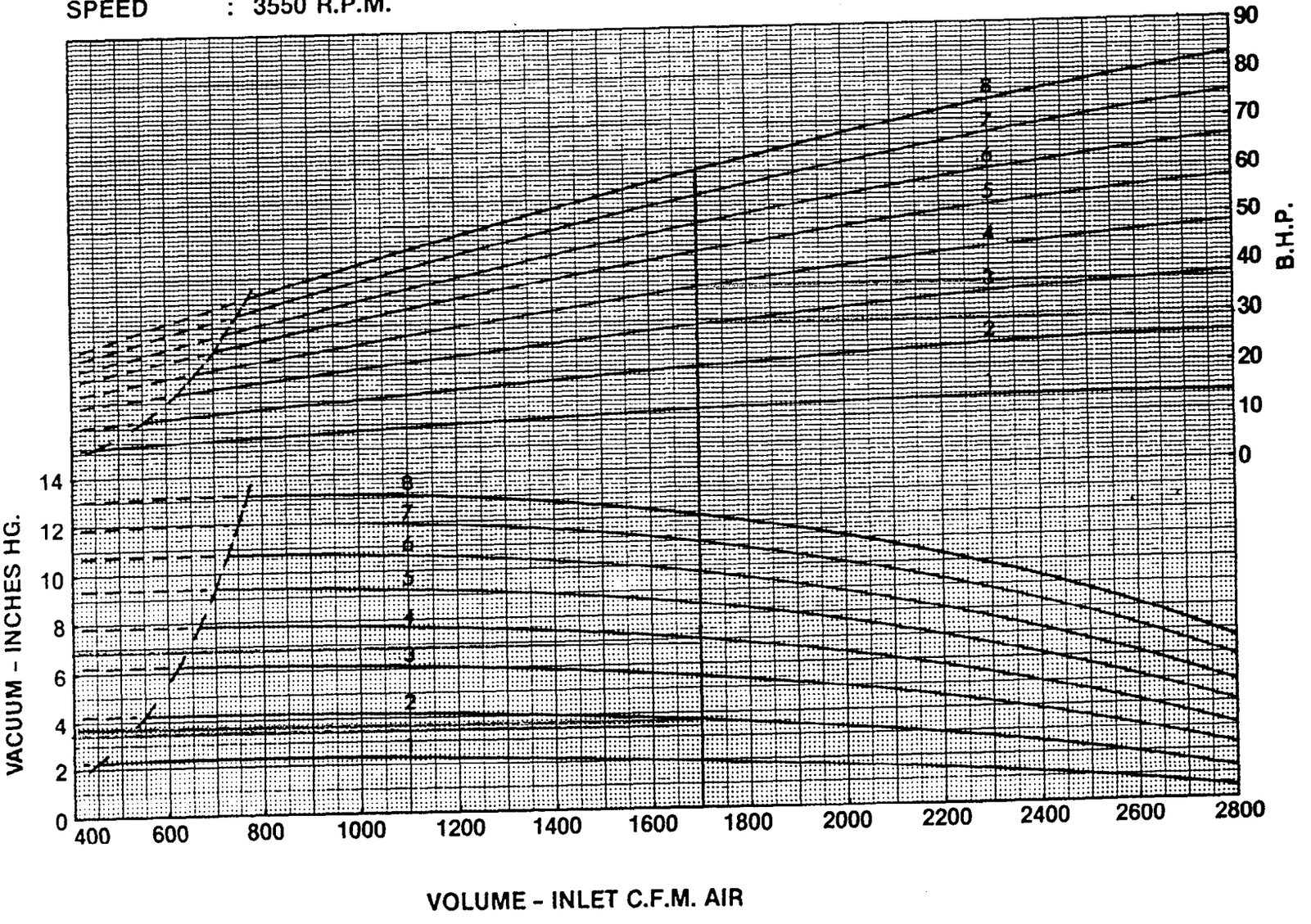

081-10

25.35.31-REV 1

7/17

Application/Engineering

Friction Loss Per Foot of Tubing

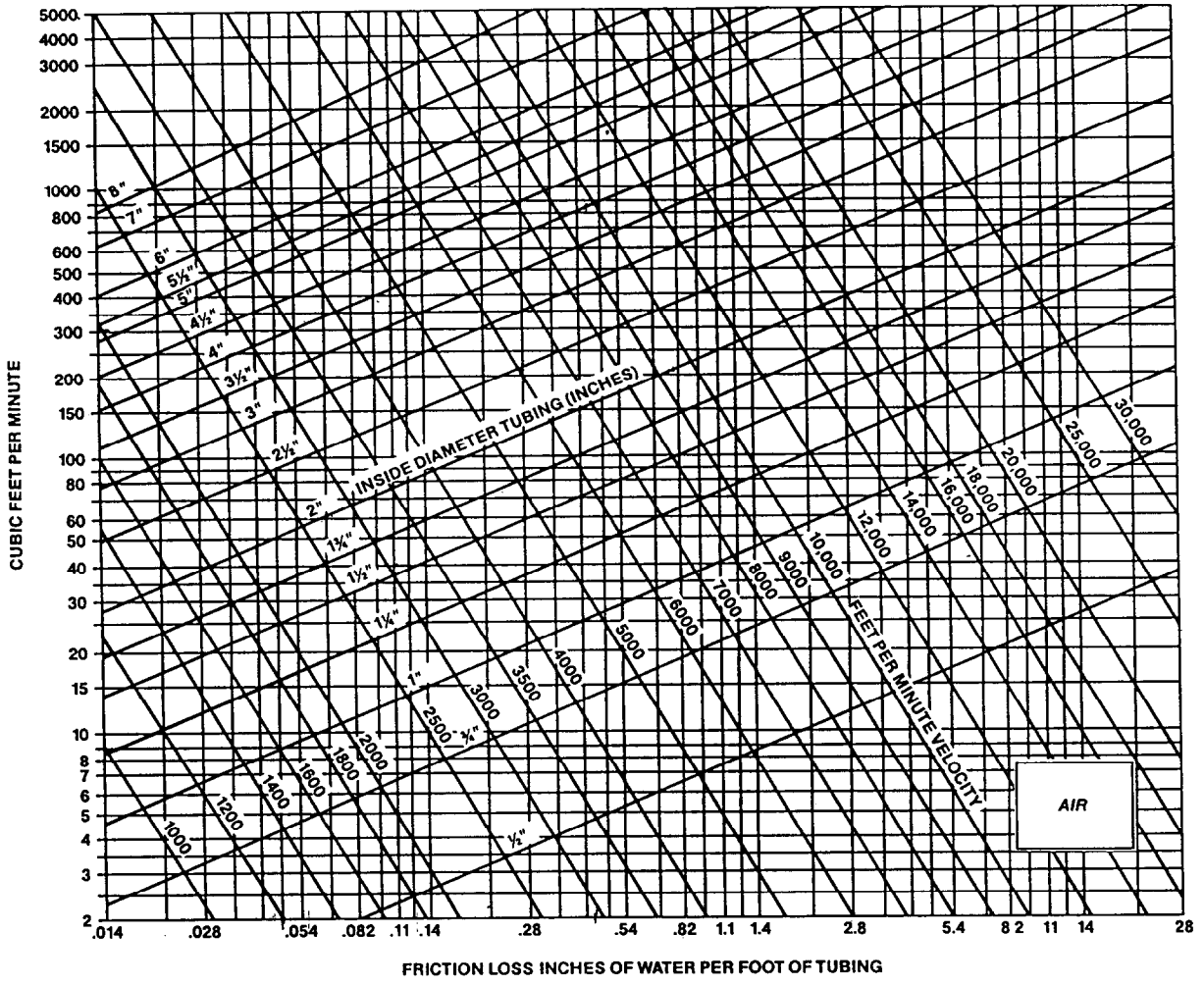

Friction Loss in Fittings

To calculate friction loss in fittings use chart below. This chart will yield equivalent lengths (in feet) of tubing. Use this length with graph above to find friction loss in inches of water column.

NOMINAL PIPE SIZE (INCHES)	EQUIVALENT TUBING LENGTH (FEET)	
	90° EL	45° EL
1¼	3	1.5
1½	4	2
2	5	2.5
2½	6	3
3	7	4
4	10	5
5	12	6
6	15	7.5
8	20	10

PRODUCT DATA

LAMSON
CORPORATION
SYRACUSE, N.Y. 13221

Allied Products Department

Blowers/ Exhausters

8/17

Technical Data
"810" Series

Design

Air or gas.
Number of stages
1 through 8 .....(@ 60 Hz. 3550 Rpm).
1 through 9 .....(@ 50 Hz. 2950 Rpm).
Inlet or outlet driven .....(inlet standard).
Inlet connection .....8" flange, matches 125# ANSI.
Outlet connection .....8" flange, matches 125# ANSI.
Operating speed .....3550 RPM.
Maximum casing pressure .....20.0 PSIG.
Seals (air).....labyrinth type.
Shaft seal (gas).....stuffing box type standard. Special seals available.
Bearings .....ball, life per AFBMA spec. #B-10.
Lubrication
Stages 1 through 7 .....grease standard, oil optional.
Stages 8 and 9 .....oil only.
Impeller diameter 24.0 (609.6)
Impeller tip speed .....22,550 FPM.
First critical speed .....4720 RPM.
Direct drive .....standard. Shaft diameter at coupling 1.875 (47.63).
Indirect drive .....non standard (V-belts and sheaves). Center distance — 36.13 (917.7).
Vibration tolerance..... 1.25 mils measured in vertical plane at top of bearing housings.

Unit Weights & Inertia Data			
Stage	Weight Machine & Base		WK²
1	1370	(622.7)	12.2
2	1730	(788.4)	22.4
3	2090	(950.0)	32.5
4	2450	(1113.6)	42.6
5	2810	(1277.3)	52.8
6	3170	(1440.9)	62.9
7	3530	(1604.5)	73.0
8	3890	(1764.5)	83.2

Capacities

To 2800 SCFM @ 12.3 PSIG (peak of blower curve) or to 3000 CFM @ 13.8" Hg. (peak of exhauster curve).

Materials of Construction

Casing ....cast iron ASTM #20 inlet head, outlet head and intermediate sections.
Bearing housings .....cast iron with bronze insert.
Bearing caps & oil reservoirs .....cast iron.
Tie rods .....cold rolled steel.
Labyrinth seals.....cast iron with babbitt insert.
Joint sealing compound .....RTV #102.
Shaft .....high grade hot rolled shaft steel.
Impellers.....cast aluminum alloy.
Base .....structural steel.
Motor pedestal .....formed steel.

Miscellaneous

Finish.....blue-green enamel.
Base pads .....molded synthetic rubber 0.25 (6.4) thick compressed x variable area.
Noise level .....in compliance with OSHA standards when machine is fully piped up (certified tests available).

Notes:
1. Dimensions given in inches and (mm). Weights given in lbs. and (kg).
2. Specifications subject to change without notice.

9/17

PRODUCT DATA

LAMSON
CORPORATION
SYRACUSE, N.Y. 13221

Allied Products Department

Blowers/ Exhausters

☐ Approval Only ☐ Certified Correct

Date _____ Signed _____

Project _____

Your Order No. _____

Our Order No. _____

"810" and "850" Series Gas Inlet Driven Direct Drive — Dimensions

Dimensions are in inches and (mm)

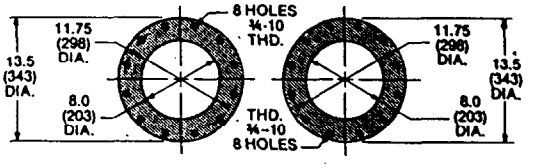

(End view of machine only)

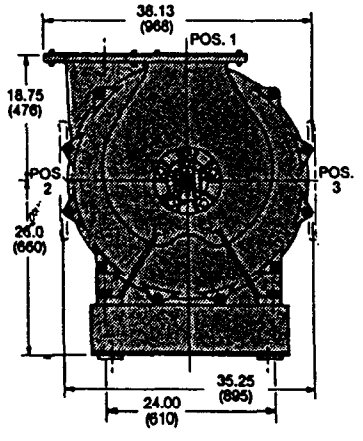

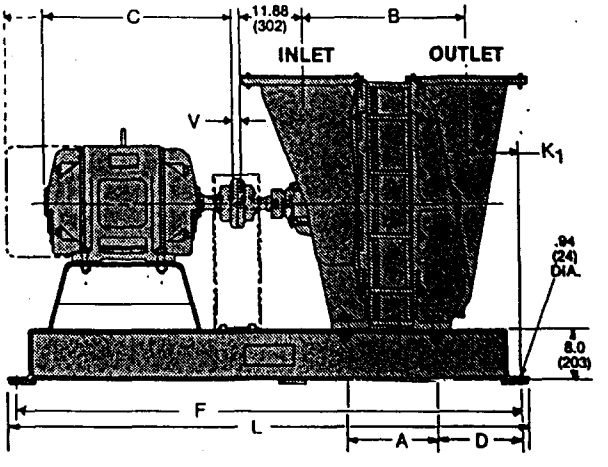

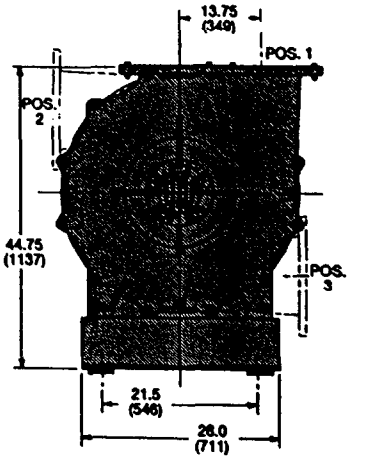

Frame No.	Dimensions							
	A	B	C	D	F	L	K_1	V
811, 851	7.13 (181)	11.56 (294)	284TS	7.0 (178)	57 (1448)	60 (1524)	6.06 (154)	1 (25)
812, 852	11.25 (286)	15.69 (398)	326TS	7.0 (178)	63 (1600)	66 (1676)	6.06 (154)	1 (25)
813, 853	15.38 (391)	19.81 (503)	365TS	7.0 (178)	70 (1778)	73 (1854)	6.06 (154)	1 (25)
814, 854	19.50 (495)	23.94 (608)	405TS	11.13 (283)	83 (2108)	86 (2184)	10.19 (259)	1 (25)
815, 855	23.63 (600)	28.06 (713)	444TS	7.0 (178)	83 (2108)	86 (2184)	6.06 (154)	1 (25)
816, 856	27.75 (705)	32.19 (818)	445TS	11.13 (283)	97 (2464)	100 (2540)	10.19 (259)	1.25 (32)
817, 857	31.88 (810)	36.31 (922)	445TS	7.0 (178)	97 (2464)	100 (2540)	6.06 (154)	1.25 (32)
818, 858	36.00 (914)	40.44 (1027)	445TS	7.0 (178)	102 (2591)	105 (2667)	6.06 (154)	1.25 (32)

NOTES:

1. Column "C" lists maximum NEMA motor frame typically required for the machine indicated.
2. Dimension "V" is maximum distance between shafts for stock couplings.
3. Flange dimensions conform to 125 pound ANSI cast iron flanged fittings.
4. See sheets #35.21.01 and #35.21.03 for Air machine prices. See sheet #35.21.02 for Gas machine prices.
5. Specifications subject to change without notice.

10/17

LAMBERT FABRICATORS INC.	PRODUCT DATA SOIL REMEDIATION ACCESSORIES

WATER SEPARATOR ASSEMBLY

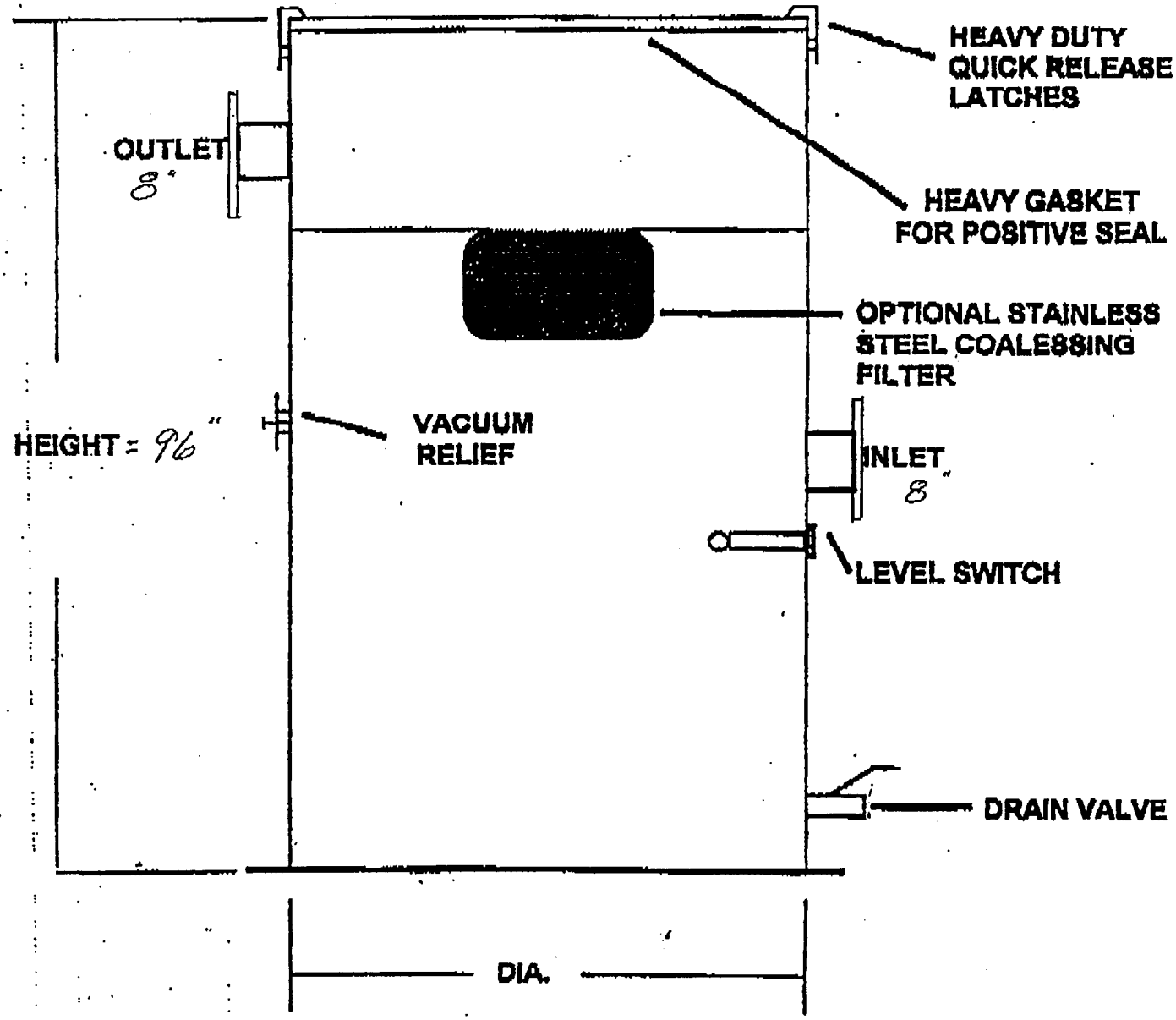

5" Hg

COMPLETE SPECIFICATIONS ON REVERSE

JUN-27-'97 FRI 09:14 ID:NOSUN ENG SALES INC TEL NO: 941 646-6752 #630 P01

11/17

Post-it® Fax Note 7672

To David Page

Company Geraghty & Miller

Location

Fax # 961 2599

Telephone #

No. of Pages 1

Today's Date 6/27/97

Time

From Bob Nosun

Company

Location

Dept. Charge

Fax #

Telephone #

Original Disposition: ☐ Destroy ☐ Return ☐ Call for pickup

Comments

David,
2500 ICFM would probably be an 8" exhaust connection, possibly a 12". Use an LES-80 for 8", LES-120 for 12".
Bob Nosun

PRODUCT DATA

1 Lamson Street • P.O. Box 4867 • Syracuse, New York 13221 • Ph 315-433-5500 • Fax 315-433-6451

LAMSON corporation

Dynamic Innovation Since 1880

CENTRIFUGAL AIR SYSTEMS

ACCESSORIES

☐ For Approval ☐ Certified For

Project

Your Order #

Our Order # By

SILENCERS

DESIGN
Air flows straight through perforated tube surrounded by acoustic absorption material packed at a controlled density to achieve silencing. The heavy exterior shell retains the acoustic pack and reflects noise back into it to maximize noise attenuation. Pressure drop is minimal. Silencer can be installed either vertically or horizontally.

CONSTRUCTION
All welded heavy gauge sheet steel shell. Connections are either N.P.T. or plate flanges drilled to match 125# ANSI flanges. Exterior finish is high grade primer.

Standard acoustical material is hairfelt for operating temperatures below 240°F. Other acoustical materials available. Special mounting brackets are available at extra cost.

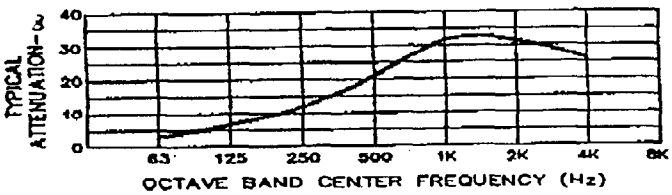

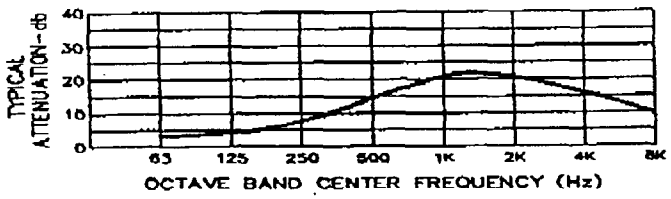

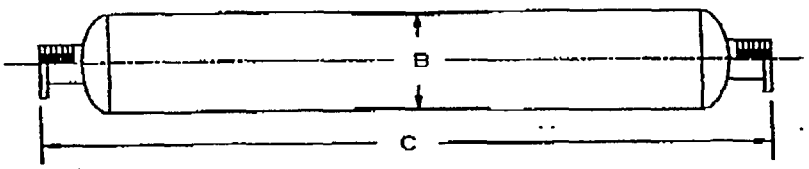

PART NUMBER	MODEL NUMBER	CONNECTION SIZE & TYPE	DIMENSIONS B	DIMENSIONS C	APPROX. WEIGHT
757322-AAO	LES-10	1" NPT (25.4)	3.25 (8.26)	16.0 (406.4)	4.0 (1.8)
757322-ABO	LES-15	1.5" NPT (38.1)	4.5 (114.3)	23.0 (584.0)	8.0 (3.6)
757322-ACO	LES-20	2" NPT (50.8)	5.0 (127.0)	34.5 (876.3)	13.0 (5.9)
757322-ADO	LES-25	2.5" NPT (63.5)	6.0 (152.4)	35.5 (901.7)	18.0 (8.2)
757322-AEO	LES-30	3" NPT (76.2)	6.5 (165.1)	43.5 (1104.9)	28.0 (12.7)
757322-AFO	LES-40M	4" NPT (101.6)	10.0 (254.0)	53.0 (1346.2)	55.0 (24.9)
757322-FAO	LES-40	4" FLG (101.6)	10.0 (254.0)	53.0 (1346.2)	55.0 (24.9)
757322-FBO	LES-50	5" FLG (127.0)	12.0 (304.8)	56.0 (1422.4)	70.0 (31.8)
757322-FCO	LES-60	6" FLG (152.4)	12.0 (304.8)	66.0 (1676.4)	90.0 (40.8)

PART NUMBER	MODEL NUMBER	CONNECTION SIZE & TYPE	DIMENSIONS B	DIMENSIONS C	APPROX. WEIGHT
757322-FDO	LES-80	8" FLG (203.2)	14.0 (355.6)	58.0 (1473.2)	138.0 (62.6)
757322-FEO	LES-100	10" FLG (254.0)	16.0 (406.4)	70.0 (1778.0)	160.0 (72.6)
757322-FFO	LES-120	12" FLG (304.8)	18.0 (457.2)	80.0 (2032.0)	250.0 (113.4)
757322-FGO	LES-140	14" FLG (355.6)	20.0 (508.0)	92.0 (2336.8)	300.0 (136.1)
757322-FHO	LES-160	16" FLG (406.4)	22.0 (558.8)	107.0 (2717.8)	340.0 (154.2)
757322-FJO	LES-180	18" FLG (457.2)	24.0 (609.6)	116.0 (2946.4)	650.0 (294.8)
757322-FKO	LES-200	20" FLG (508.0)	26.0 (660.4)	128.0 (3251.2)	705.0 (319.8)

Notes:
1. Dimensions given in inches and (mm). Weights given in lbs. and (kg).
2. Specifications subject to change without notice.

12/17

PRODUCT DATA

LAMSON
CORPORATION
SYRACUSE, N.Y. 13221

ALLIED PRODUCTS DEPARTMENT

ACCESSORIES

☐ For Approval ☐ Certified For

Project _____
Your Order # _____
Our Order # _____ By _____

Filters, Dry Type Radial Fin-Felted Media

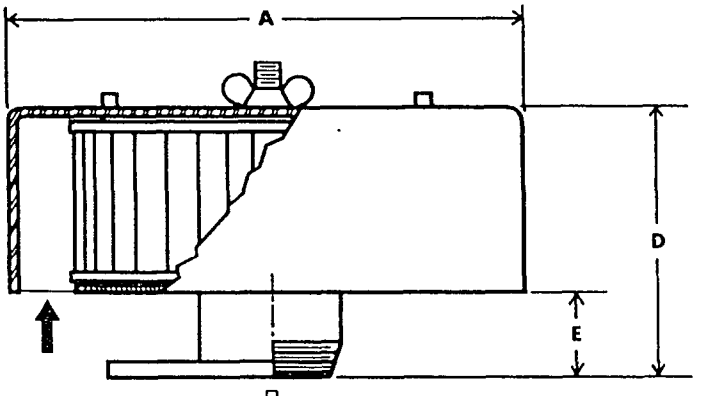

Models LMN-C611 Thru LMN-C623

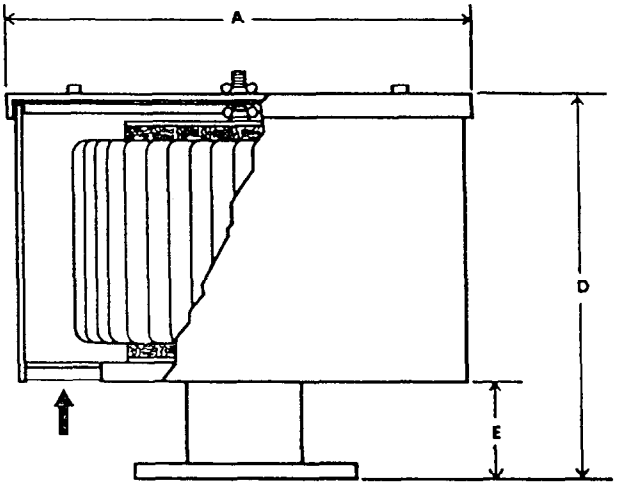

Models LMN-C625 Thru LMN-C633

Model Number	Capacity		Connection		Dimensions			Approx. Weight
	CFM	M³/Min.	Size	Type	A	D	E	
LMN-C611	100	2.8	2.0 (50.8)	M	7.5 (191)	6.25 (159)	3.25 (83)	4.0 (1.8)
LMN-C613	200	5.7	2.5 (63.5)	M	7.5 (191)	6.25 (159)	3.25 (83)	6.0 (2.7)
LMN-C615	300	8.5	3.0 (76.2)	M	10.0 (254)	7.25 (184)	3.25 (83)	10.0 (4.5)
LMN-C617	450	12.7	4.0 (101.6)	M	12.0 (305)	7.25 (184)	3.25 (83)	130.0 (5.9)
LMN-C619	700	19.8	5.0 (127.0)	Flg.	12.0 (305)	7.25 (184)	3.25 (83)	20.0 (9.1)
LMN-C621	1000	28.3	6.0 (152.4)	Flg.	16.0 (406)	7.75 (197)	3.75 (95)	23.0 (10.4)
LMN-C623	2000	56.6	8.0 (203.2)	Flg.	20.0 (508)	12.0 (305)	4.0 (102)	54.0 (24.5)
LMN-C625	3000	85.0	10.0 (254.0)	Flg.	21.5 (546)	16.75 (425)	5.25 (133)	111.0 (50.4)
LMN-C627	4000	113.3	12.0 (304.8)	Flg.	21.5 (546)	16.75 (425)	5.25 (133)	132.0 (59.9)
LMN-C629	6000	169.9	14.0 (355.6)	Flg.	25.5 (648)	24.13 (613)	3.75 (95)	155.0 (70.3)
LMN-C631	7000	198.2	16.0 (406.4)	Flg.	28.0 (711)	24.13 (613)	3.75 (95)	175.0 (79.4)
LMN-C633	10000	283.2	18.0 (457.2)	Flg.	28.0 (711)	24.13 (613)	3.75 (95)	190.0 (86.2)

CONSTRUCTION:

1. Replaceable, cleanable elements are of radial fin cartridge design. The standard felted polyester medium offers 10 micron solids retention at 98% efficiency with low pressure drop. For particle retention down to 0.3 microns, special media are available.
2. All models are furnished with a rugged weather hood which provides built-in protection from rain or snow in outdoor service. Standard housings are carbon steel protected by a rust preventative primer coating beneath a durable all-weather paint. Alternate housing materials available.

NOTES:

1. Pressure drop indicators are available.
2. Connections designated "M" are male NPT.
3. Connections designated "Flg." are plate flanges with ½ the number of standard ANSI bolt holes. The bolt circle matches 125#-150# standard flange drilling.
4. Dimensions are given in inches and (mm). Weights are given in pounds and (kg).

Specifications subject to change without notice.

PRODUCT DATA

LAMSON
CORPORATION
SYRACUSE, N.Y. 13221

ALLIED PRODUCTS DEPARTMENT

ACCESSORIES

AMMETEF CASE MOUNTED
DIMENSIONS & SCHEMATIC

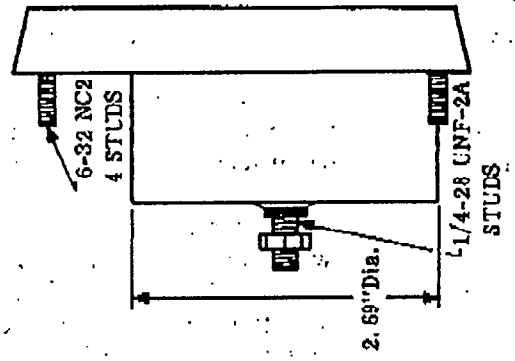

☐ APPROVAL ONLY
☐ CERTIFIED CORRECT

PROJECT: _____

SIGNED _____ YOUR ORDER NO. _____

DATE _____ OUR ORDER NO. _____

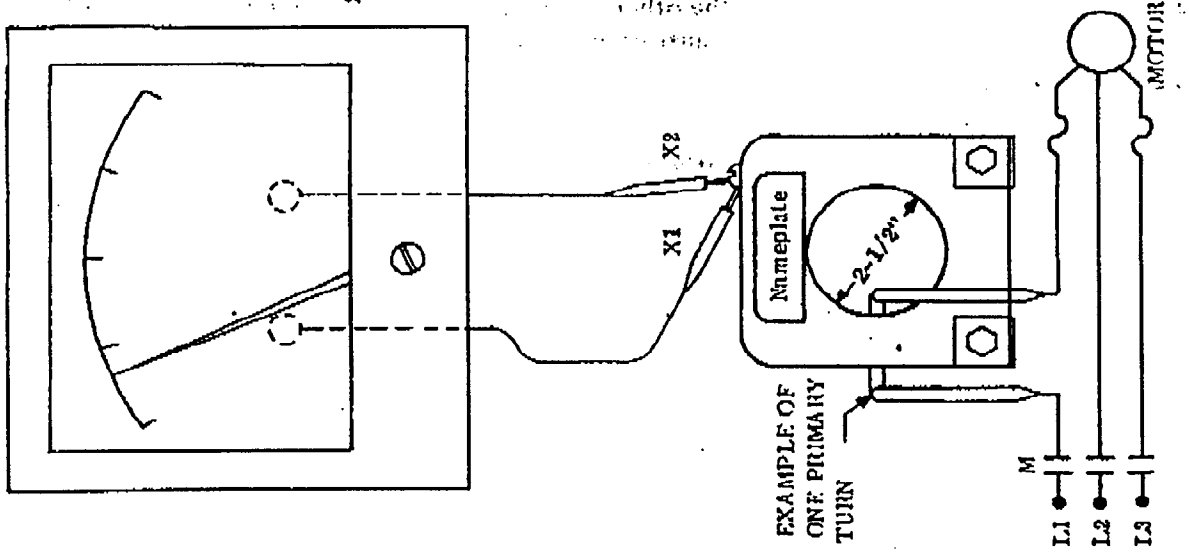

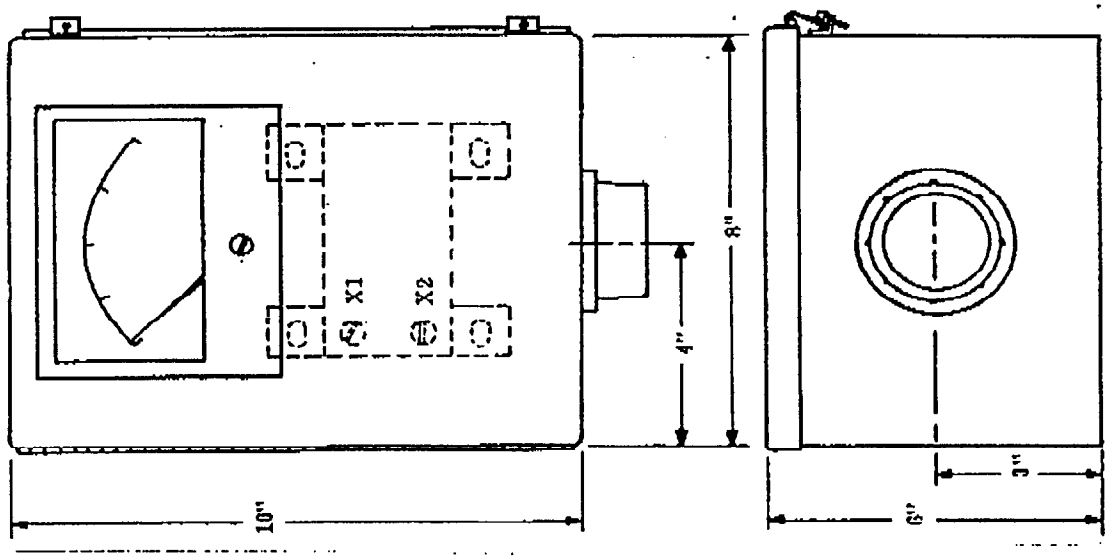

14/17

PRODUCT DATA

LAMSON CORPORATION
SYRACUSE, N.Y. 13221

ALLIED PRODUCTS DEPARTMENT

ACCESSORIES

SURGE PROTECTION DEVICE

It is a characteristic of centrifugal machines to surge at low volumes. This phenomenon is harmful and will cause bearing failure if allowed to continue for any length of time. The fluctuation in differential pressure typical of surge is also detrimental to the process in some instances.

Where system demand is likely to decrease unexpectedly the device herein described will automatically shut down the machine before it can go into surge. This feature is particularly desireable for installations where the equipment will operate unattended for prolonged periods.

SCHEMATIC

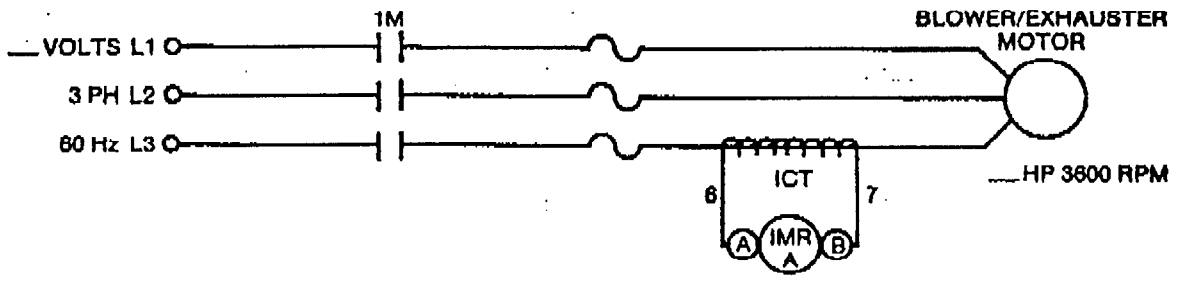

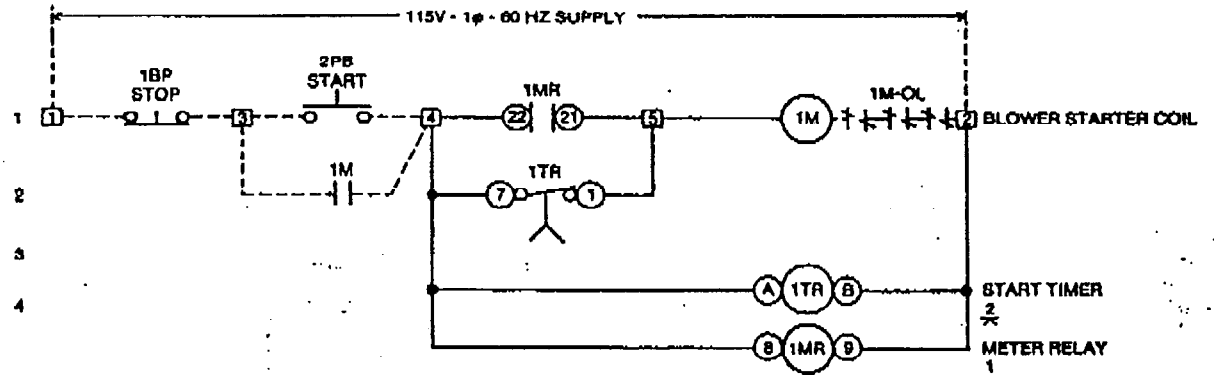

SEQUENCE OF OPERATION

Pressing start button energizes motor starter, 1M, closing all 1M contacts and energizing the blower/exhauster motor. When motor current exceeds 1MR setpoint, 1MR contact closes to hold 1M energized when 1TR timed contact opens. When motor current drops into the surge region (below setpoint) 1MR contact opens de-energizing motor starter 1M shutting down the blower/exhauster.

Note: Verification of C/T ratio and turns required is on data sticker located top of meter case.

15/17

ALLIED PRODUCTS DEPARTMENT

ACCESSORIES

LAMSON
CORPORATION
SYRACUSE, N.Y. 13221

PRODUCT DATA

ENCLOSURE: NEMA 12 with 1½" F.N.P.T. conduit hub. Bomac Part No. 3651-6.
AMMETER: Simpson "Rugged Seal" Environmental Resistant calibrated in (CFM) (AMPS) (CFM & AMPS)
CURRENT TRANSFORMER: G. E. type JCH-O having a ratio of . Transformer requires primary turns and (adding) (subtracting) secondary turns operating on volts.
NOTE: Wiring shown is example when no secondary turns are required. When secondary turns are indicated connect as noted below:
TO SUBTRACT SECONDARY TURNS, connect a conductor to the secondary terminal with the X_1 polarity mark and pass it through the transformer window from the side with the H_1 polarity mark.
TO ADD SECONDARY TURNS, connect a conductor to the secondary terminal with the X_1 polarity mark and pass it through the transformer window from the side marked with the H_2 polarity mark. In either case, the conductor connected to the other secondary terminal should be connected directly to the ammeter without going through the transformer window.

NOTES:
1. See Sheet 35.23.23 for prices.
2. Specifications subject to change without notice.

16/17

ALLIED PRODUCTS DEPARTMENT

ACCESSORIES

LAMSON
CORPORATION
SYRACUSE, N.Y. 13221

PRODUCT DATA

SUB PANEL LAYOUT

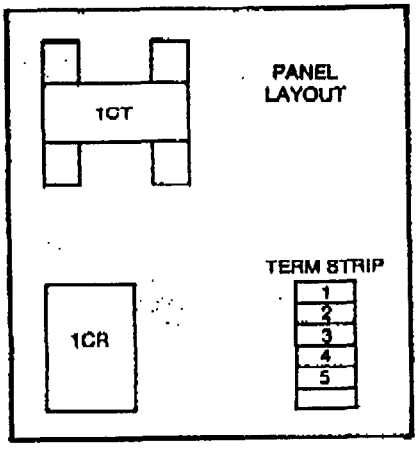

NEMA 12 ENCLOSURE

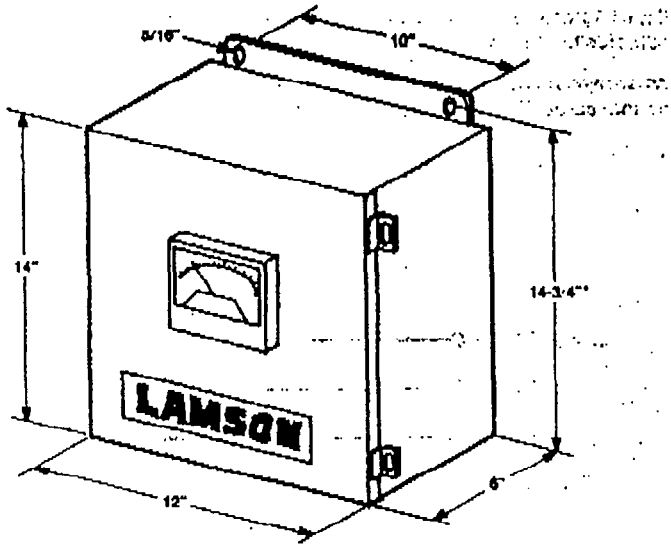

COMPONENT LIST

SYMBOL	REQD.	DESCRIPTION
1CT	1	CURRENT TRANSFORMER____:5 RATIO REQUIRES _____PRIMARY TURNS
1MR	1	METER RELAY
1TR	1	SOLID STATE TIMER .2-30 SEC.
ENCL.	1	14" x 12" x 6" NEMA 12
PANEL	1	SUB-PANEL

☐ **Approval** ONLY ☐ **Certified** CORRECT

DATE_____SIGNED _____

_____

_____

PROJECT _____

YOUR ORDER NO. _____

OUR ORDER NO. _____

1. Special enclosure as well as CFM calibrated meter relay available at nominal extra charge.
2. Meter relay setpoint may be positioned at the factory or in the field.
3. See Sheet 35.23.23 for prices.
4. Specifications subject to change without notice.

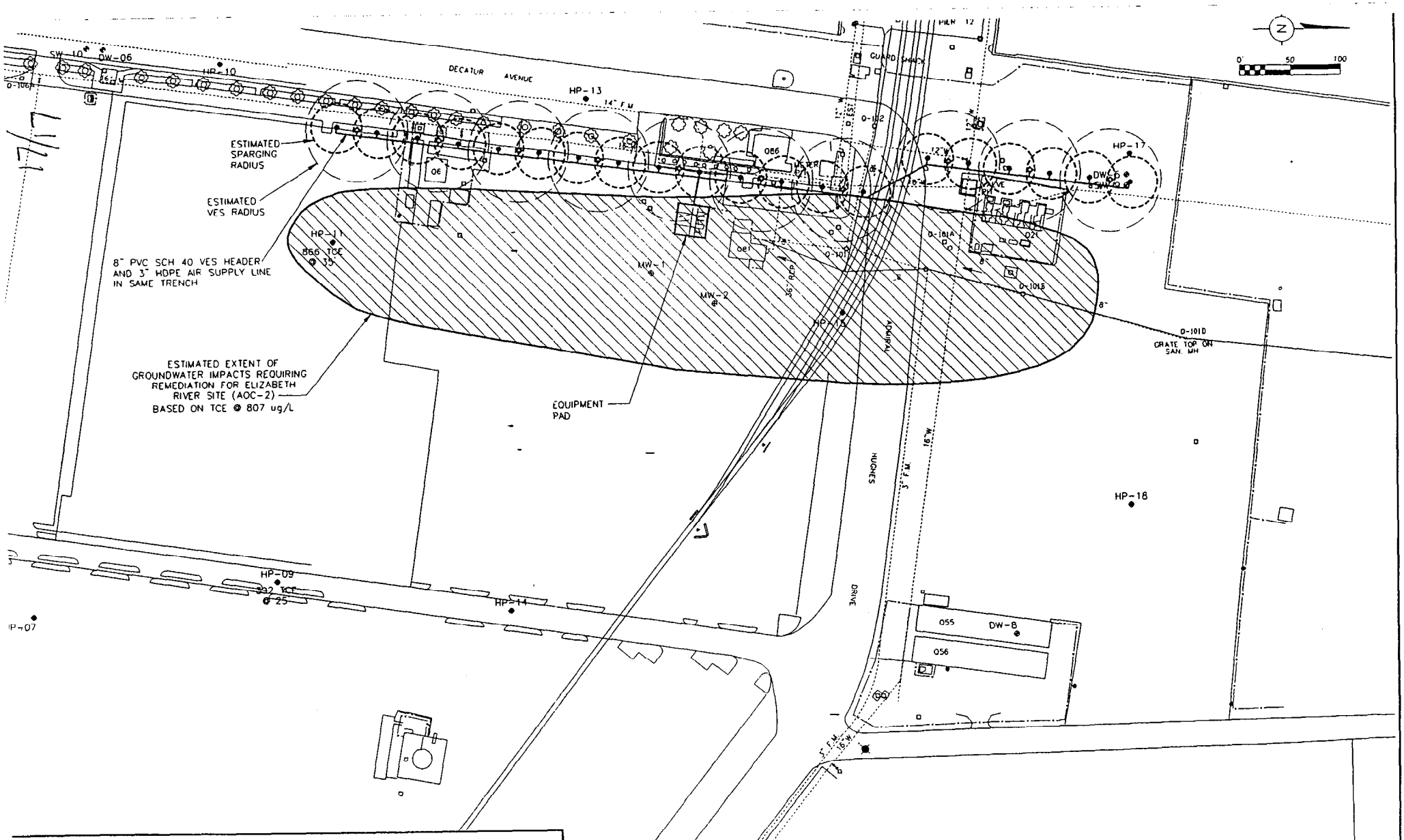

LEGEND

BASE MAP LEGEND	EXISTING	
GROUNDWATER MONITORING WELL	GW-1	ISOCONCENTRATION FOR PCE @ 10-15' DEPTH (ug/l)
HYDROPUNCH	HP-10	
DEEP MONITORING WELL	DW-1	ISOCONCENTRATION FOR TCE @ 10-15' DEPTH (ug/l)
SHALLOW MONITORING WELL	SW-2	
SHALLOW MONITORING WELL (O'BRIEN & GERE)	MW-1	ISOCONCENTRATION FOR VOC'S @ 10-15' DEPTH (ug/l)
APPROXIMATE VES WELL LOCATION	◇	ESTIMATED GROUNDWATER REMEDIATION AREA (PCE CLEANUP LEVEL > 3519 ug/l)
APPROXIMATE AIR SPARGING WELL LOCATION	●	

NOTE
EXACT LOCATIONS OF VES/SPARGE WELLS TO BE FIELD LOCATED AND ENGINEER APPROVED

GERAGHTY & MILLF[illegible] INC.
Environmen[illegible] [illegible]ices

DRAWING CONFIDENTIAL: THIS DRAWING AND ALL INFORMATION CONTAINED THEREON IS AND SHALL REMAIN THE PROPERTY OF GERAGHTY & MILLER, INC. AS AN INSTRUMENT OF PROFESSIONAL SERVICE. THIS INFORMATION SHALL NOT BE USED IN WHOLE OR IN PART WITHOUT THE FULL KNOWLEDGE AND PRIOR WRITTEN CONSENT OF GERAGHTY & MILLER, INC.

SCALE VERIFICATION
THIS BAR REPRESENTS ONE INCH ON THE ORIGINAL DRAWING.
USE TO VERIFY FIGURE REPRODUCTION SCALE

REV. NO.	DATE	DESCRIPTION	BY	APPR.

PROJECT NO.: IF0992001 | FILE NO: NORF-ST2.DWG
DRAWING NO.: NORFOLK | PLOT SCALE: 1=50
DRAFTED BY: B. HERRMANN | DATE: 4/29/97
CHECKED BY: X | DATE: X
APPROVED BY: X | DATE: X
LAST REVISION BY: BJH | DATE: 5/21/97

AIR SPARGING/SVE LAYOUT AT AOC 2

O-AREA DRUM STORAGE YARD
NAVAL BASE NORFOLK
NORFOLK, VIRGINIA

DRAWING NO.
?

APPENDIX C
FINAL HEALTH AND SAFETY PLAN

HEALTH AND SAFETY PLAN
FOR
PHASE I OF THE AIR SPARGING REMEDIATION SYSTEM
Q AREA DRUM STORAGE YARD
NORFOLK NAVAL BASE
NORFOLK, VIRGINIA

Prepared for:

DEPARTMENT OF THE NAVY
Contract No. N62470-93-D-3032
Delivery Order 0073

Prepared by:

OHM Remediation Services Corp.
Trenton, New Jersey

Robert A. Brooks, CSP
Health and Safety Manager

Reviewed by:

Phil Tully, P.E.
Project Manager

Kevin J. McMahon, M.S., CIH
Health and Safety Director/Program CIH

John P. Franz, P.E.
Program Manager

OHM Remediation Services Corp.
A Subsidiary of OHM Corporation

September 2, 1997
OHM Project 17260HS

TABLE OF CONTENTS

1.0 INTRODUCTION 1-1

1.1 SITE HISTORY 1-1
1.2 SCOPE OF WORK 1-1

FIGURE 1.1 SITE MAP 1-3

2.0 KEY PERSONNEL AND MANAGEMENT 2-1

2.1 PROJECT MANAGER (PM) 2-1
2.2 SITE SUPERVISOR (SS) 2-1
2.3 SITE SAFETY OFFICER (SSO) 2-1
2.4 HEALTH AND SAFETY MANAGER (HSM) 2-2
2.5 PROGRAM CERTIFIED INDUSTRIAL HYGIENIST (CIH) 2-2
2.6 EMPLOYEE SAFETY RESPONSIBILITY 2-2
2.7 KEY SAFETY PERSONNEL 2-3

FIGURE 2.1 HEALTH AND SAFETY ORGANIZATION 2-4

3.0 JOB SAFETY ANALYSIS 3-1

3.1 CHEMICAL HAZARDS 3-1
3.2 PHYSICAL HAZARDS 3-2
3.3 ENVIRONMENTAL HAZARDS 3-2
3.4 VEHICLE SAFETY MANAGEMENT 3-4
3.5 TASK-SPECIFIC JOB SAFETY ANALYSES 3-4
3.6 ACCIDENT PREVENTION 3-22

4.0 WORK AND SUPPORT AREAS 4-1

4.1 EXCLUSION ZONE 4-1
4.2 CONTAMINATION-REDUCTION ZONE 4-1
4.3 SUPPORT ZONE 4-1
4.4 SITE CONTROL LOG 4-1
4.5 GENERAL 4-1

5.0 PROTECTIVE EQUIPMENT 5-1

5.1 ANTICIPATED PROTECTION LEVELS 5-1
5.2 PROTECTION LEVEL DESCRIPTIONS 5-2
5.3 SUPPLIED-AIR RESPIRATORS 5-3
5.4 BREATHING-AIR QUALITY 5-3
5.5 AIR-PURIFYING RESPIRATORS 5-3
5.6 RESPIRATOR CARTRIDGES 5-3
5.7 CARTRIDGE CHANGES 5-3
5.8 INSPECTION AND CLEANING 5-3
5.9 FIT TESTING 5-4
5.10 FACIAL HAIR 5-4
5.11 CORRECTIVE LENSES 5-4
5.12 CONTACT LENSES 5-4
5.13 MEDICAL CERTIFICATION 5-4
5.14 SITE-SPECIFIC PERSONAL PROTECTIVE EQUIPMENT (PPE) PROGRAM 5-4

TABLE OF CONTENTS (CONTINUED)

6.0 DECONTAMINATION PROCEDURES 6-1

6.1 PERSONNEL DECONTAMINATION 6-1
6.2 EQUIPMENT DECONTAMINATION 6-2
6.3 DISPOSAL 6-2

7.0 AIR MONITORING 7-1

7.1 LOWER EXPLOSIVE LIMIT/OXYGEN (LEL/O_2) METER 7-1
7.2 PHOTOIONIZATION DETECTOR (PID) 7-2
7.3 COLORIMETRIC DETECTOR TUBES 7-3
7.4 AIR MONITORING LOG 7-4
7.5 CALIBRATION REQUIREMENTS 7-5
7.6 AIR MONITORING RESULTS 7-5

8.0 EMERGENCY RESPONSE 8-1

8.1 PRE-EMERGENCY PLANNING 8-1
8.2 EMERGENCY RECOGNITION AND PREVENTION 8-2

TABLE 8.1 EMERGENCY TELEPHONE NUMBERS 8-3

8.3 PERSONNEL, ROLES, LINES OF AUTHORITY, AND COMMUNICATIONS 8-3

FIGURE 8.1 MAP TO HOSPITAL 8-4

8.4 SAFE DISTANCES AND PLACES OF REFUGE 8-6
8.5 EVACUATION ROUTES AND PROCEDURES 8-7
8.6 EMERGENCY SPILL AND RESPONSE PROCEDURES AND EQUIPMENT 8-8
8.7 EMERGENCY CONTINGENCY PLANS 8-12
8.8 MEDICAL EMERGENCY CONTINGENCY MEASURES 8-12
8.9 FIRE CONTINGENCY MEASURES 8-13
8.10 HAZARDOUS WEATHER CONTINGENCY MEASURES 8-14
8.11 SPILL/RELEASE CONTINGENCY MEASURES 8-15

9.0 TRAINING REQUIREMENTS 9-1

9.1 SITE ORIENTATION 9-1

10.0 MEDICAL SURVEILLANCE PROGRAM 10-1

TABLE 10.1 WORKER MEDICAL PROFILES 10-1

10.1 EXAMINATION SCHEDULE 10-1

APPENDICES
APPENDIX A HEALTH AND SAFETY PLAN CERTIFICATION
APPENDIX B OHM HAZARD COMMUNICATION PROGRAM
APPENDIX C MATERIAL SAFETY DATA SHEETS
APPENDIX D SITE-SPECIFIC PERSONAL PROTECTIVE EQUIPMENT (PPE) PROGRAM
APPENDIX E BURIED UTILITY LOCATION AND ASSOCIATED SUBSURFACE FIELD ACTIVITIES

1.0 INTRODUCTION

This Health and Safety Plan (HASP) has been developed for United States Navy, LANTDIV, Delivery Order entitled, Phase I of the Air Sparging Remediation System, Q Area Drum Storage Yard, Norfolk Naval Base, Norfolk, Virginia. The Delivery Order will be executed per the requirements stated in the Final Statement of Work (SOW) for Service Delivery Order per Contract No. N62470-93-D-3032, Delivery Order 0073, in cooperation with the Navy. This Delivery Order will also be executed in accordance with Naval Facilities Engineering Command (NAVFAC).

This HASP documents the policies and procedures which protect workers and the public from potential hazards posed by work at this site and is a key component in the ***OHM Safety Improvement Process***. OHM considers safety the highest priority during work at a site containing potentially hazardous materials and has established a goal of **zero incidents** for all projects. All projects will be conducted in a manner which minimizes the probability of injury, accident, or incident occurrence. This HASP is a key element in the proper planning of project work which is necessary to assure the goal of **zero incidents** is achieved. The HASP Acknowledgment (Appendix A) will be signed by all who actively participate at this project.

Although the plan focuses on the specific work activities planned for this site, it must remain flexible because of the nature of this work. Conditions may change and unforeseen situations may arise that require deviations from the original plan. This flexibility allows modification by the OHM supervisors and health and safety officials with approval from the project CIH.

1.1 SITE HISTORY

The Q Area Drum Storage Yard (QADSY) is located on the Sewells Point Naval Complex, in the northern portion of the Norfolk Naval Base. The QADSY and surrounding areas were created in the early 1950s using dredged materials derived from Willoughby Bay. The site is a flat, open area, predominantly covered with gravel. Site elevation averages about 10 feet above mean sea level. Security fencing encloses portions of the site and paved parking areas border the site to the north and west.

The QADSY Area of Concern (AOC-1) is a relatively shallow (less than 30 feet deep), VOC-contaminated groundwater plume originating from the northwest quadrant of the QADSY site. The primary contaminant of concern (COC) in this area is tetrachloroethylene. The horizontal extent of the tetrachloroethylene plume is largest at a depth of 15 feet. The horizontal extent of the area to be remediated will be based on the final groundwater remediation goals.

The Elizabeth River Site Area of concern (AOC-2) is a deeper (i.e., extending to at least 35 feet in depth), VOC-contaminated groundwater plume located along the Elizabeth River between piers 11 and 12. This plume apparently originated from a separate source area. The primary contaminant of concern in this area is tetrachloroethylene. The horizontal extent of the tetrachloroethylene plume is largest at the 35 feet depth.

1.2 SCOPE OF WORK

The principal tasks to be conducted are listed below.

- Pre-construction Layout and Staking
- Mobilization\Site Setup
- Well Point\ SVE Well Installation (air sparging/soil vapor extraction wells)
- Asphalt and Concrete Removal and Replacement

- Prepare Concrete Equipment Slab
- General Trenching and Backfilling Operation
- System construction activities (electrical\mechanical\HVAC Installation)
- Installation of Air Sparge and SVE Piping
- Treatment System Start-Up, Operation and Maintenance
- Site Restoration
- Site Demobilization

These activities have been analyzed for potential hazards for which control measures are provided in Section 3.4, Job Safety Analysis.

This HASP has been prepared for the above scope of work. Any changes to the scope of work will require amendment of the plan to remain approved.

Figure 1.1 Site Location Map

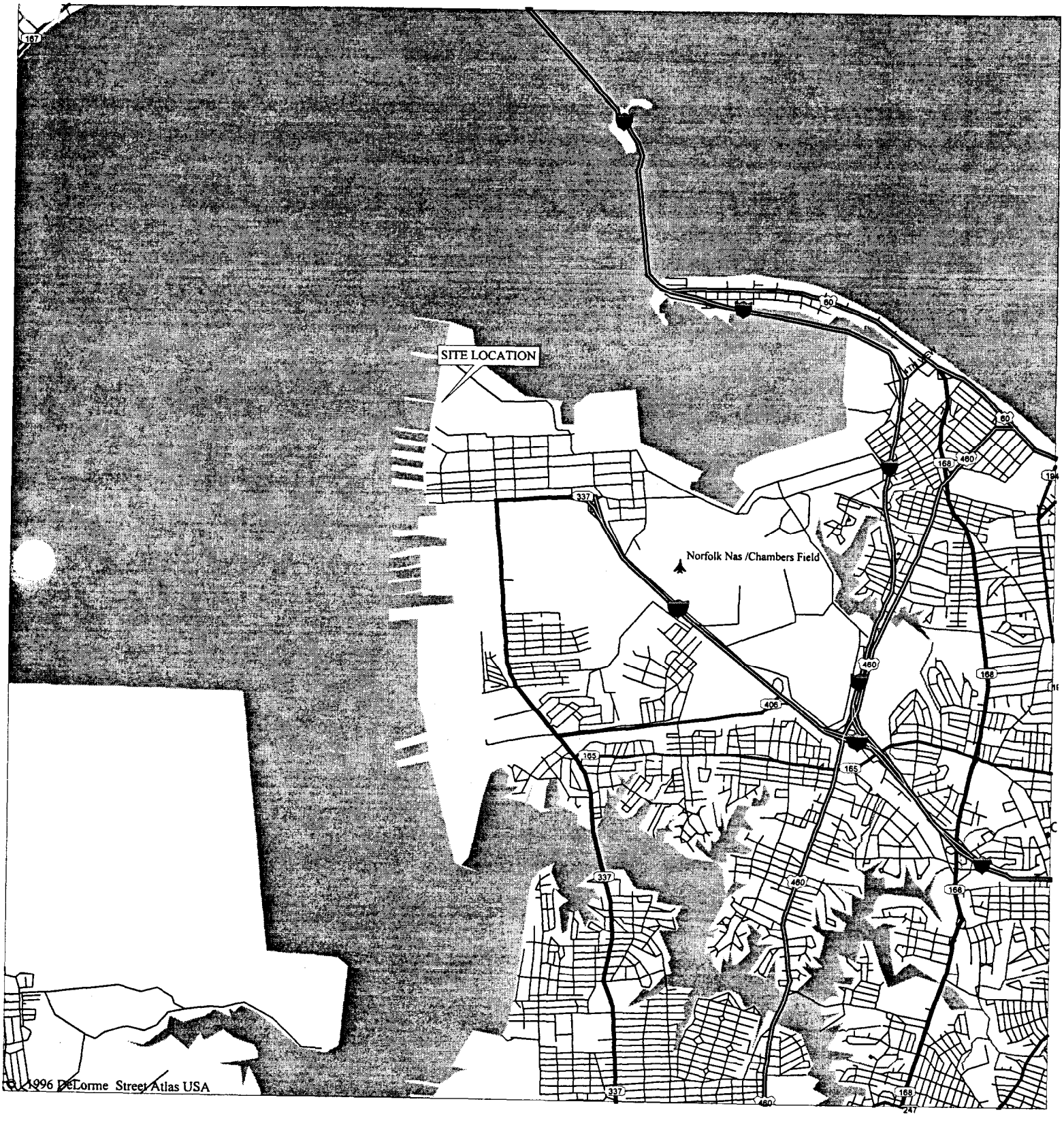

FIGURE 1.1
SITE MAP

2.0 KEY PERSONNEL AND MANAGEMENT

The Project Manager (PM), Site Supervisor (SS), Certified Industrial Hygienist (CIH) Health and Safety Manager (HSM) and Site Safety Officer (SSO) are responsible for formulating and enforcing health and safety requirements, and implementing the HASP. Reporting relationships are shown in Figure 2.1

2.1 PROJECT MANAGER (PM)

The PM has the overall responsibility for the project and to assure that the goals of the construction remedial action are attained in a manner consistent with the HASP requirements. The PM will coordinate with the SS and the SSO to assure that the remedial action goals are completed in a manner consistent with the HASP. The PM will conduct a monthly health and safety audit of the project using the Management Safety Improvement Report Form. Specific Key Requirement Areas (KRAs) for safety performance include:

- Implement Site Specific Safety Awareness/ Recognition program
- Conduct site audits of project (Management Safety Improvement Report: one within 30 days of mobe; one within 120 days of mobe)
- Investigate and report findings for any OSHA recordable cases; assure corrective actions are taken

2.2 SITE SUPERVISOR (SS)

The SS is responsible for field implementation of the HASP. The SS will be the main contact in any on-site emergency situation and will insure off-site emergency agencies have been contacted prior to the start of work. The SS will act as the SSO when the assigned SSO is not on the project site. The SS will conduct periodic inspections (at least weekly) of the work site to confirm compliance with all health and safety requirements. The Project Safety Improvement Checklist shall be used to document inspections. The SS is also responsible for coordinating remedial actions for all deficiencies and for enforcing the OHM "Cardinal Safety Rules." Specific KRAs for safety performance include:

- Complete Site-Specific Job Safety Analyses for all principle tasks
- Implement Site Specific Safety Awareness/ Recognition program
- Conduct weekly safety inspections of the job site
- Correct all deficiencies as noted on Management Safety Improvement Reports and safety department audits, within recommended time frames
- Investigate and report findings for OSHA recordable cases; assure corrective actions are taken

2.3 SITE SAFETY OFFICER (SSO)

The SSO has responsibility for administering the HASP relative to site activities, and will be in the field periodically while site activities are in progress. The SSO's primary operational responsibilities include personal and environmental monitoring, coordination of job safety analyses, selection and care of personal protective equipment, assignment of protection levels and review of work permits. The SSO will monitor all field activities involved with safety and is authorized to stop work when an imminent health or safety risk exists. The SSO is responsible for informing all on-site personnel of essential safety requirements and facilitating the daily safety meetings. Specific KRAs for SSO performance include:

- Monitor workers for signs of stress, such as cold exposure, heat stress, and fatigue
- Reevaluate site conditions on an on-going basis. Coordinate protective measures including engineering controls, work practices and personal protective equipment

- Assist the SS in the preparation, presentation and documentation of daily safety meetings
- Conduct and prepare reports of daily safety inspections of work processes, site conditions, equipment conditions and submit to SS. Discuss any necessary corrective actions with the SS and review new procedures
- Initiate revisions of the HASP as necessary for new tasks or modifications of existing operations and submit to the Program CIH for approval
- Perform air monitoring as required
- Assist the PM and SS in accident investigations
- Prepare permits for special operations, e.g., hot work, confined spaces, line breaking, etc.
- Maintain site safety records
- Conduct weekly inspections of all fire extinguishers, supplied air respirators, first-aid kits, and eye washes/emergency showers
- Inform subcontractors of the elements of the HASP/contractor pre-job checklist
- Coordinate the preparation of Site Specific Job Safety Analyses with the SS, team leader, and work crew
- Coordinate the daily Safety Observer Program
- Coordinate the Site Specific Safety and Health Awareness and Recognition Program (SHARP) with Project Manager and Supervisor

2.4 HEALTH AND SAFETY MANAGER (HSM)

The HSM is responsible for staffing health and safety personnel and monitoring projects for compliance with regulatory and OHM health and safety policies and procedures. This position reports to the Region Health and Safety Director and will visit the site periodically to ensure compliance with this HASP.

2.5 PROGRAM CERTIFIED INDUSTRIAL HYGIENIST (CIH)

The Project CIH is responsible for reviewing the HASP and ensuring that the HASP is complete and accurate. The Program CIH provides technical and administrative support for the LANTDIV Health and Safety Program. If necessary, the CIH can modify specific aspects of the HASP to adjust for on-site changes that affect safety. The CIH will coordinate with the HSM and SSO on all modifications to the HASP and will be available for consultation when required. The CIH will not necessarily be on site during OHM activities but may make periodic site visits to determine compliance. The CIH reports to the Regional Vice President/General Manager.

2.6 EMPLOYEE SAFETY RESPONSIBILITY

Each employee is responsible for personal safety as well as the safety of others in the area and is expected to participate fully in the ***Safety Improvement Process***, particularly the Safety Observation Program. The employee will use all equipment provided in a safe and responsible manner as directed by the SS. All OHM personnel will follow the policies set forth in the OHM Health and Safety Procedures Manual, with particular emphasis on the OHM "Cardinal Safety Rules." Employees that knowingly disregard safety policies/procedures may be subject to disciplinary actions.

2.7 KEY SAFETY PERSONNEL

The following individuals share responsibility for health and safety at the site:

Project Manager	Phil Tully, P. E. 609-588-6348 (office) 609-869-8954 (pager)
RPM	David Forsythe 757-322-4783 (office)
ROICC/NTR	Ms. Marijane Mc Carthy 757-322-4467 (office)
Site Supervisor	John Dormi 609-421-7574 (pager)
Site Safety Officer	Charles Green 609-738-8918 (pager)
Program Manager for LANTDIV	John P. Franz, P.E. 609-588-6477 (office)
Deputy Program Manager LANTDIV	David Leadenham 609-588-6370 (office)
Health and Safety Manager	Robert A. Brooks, CSP 609-588-6423 (office) 800-818-2185 (pager)
Northeast Region Health and Safety Director/Program CIH	Kevin McMahon, M.S., CIH 609-588-6375 (office) 609-421-7523 (pager)
Vice President, Health and Safety	Fred Halvorsen, Ph.D., PE, CIH 800-231-7031

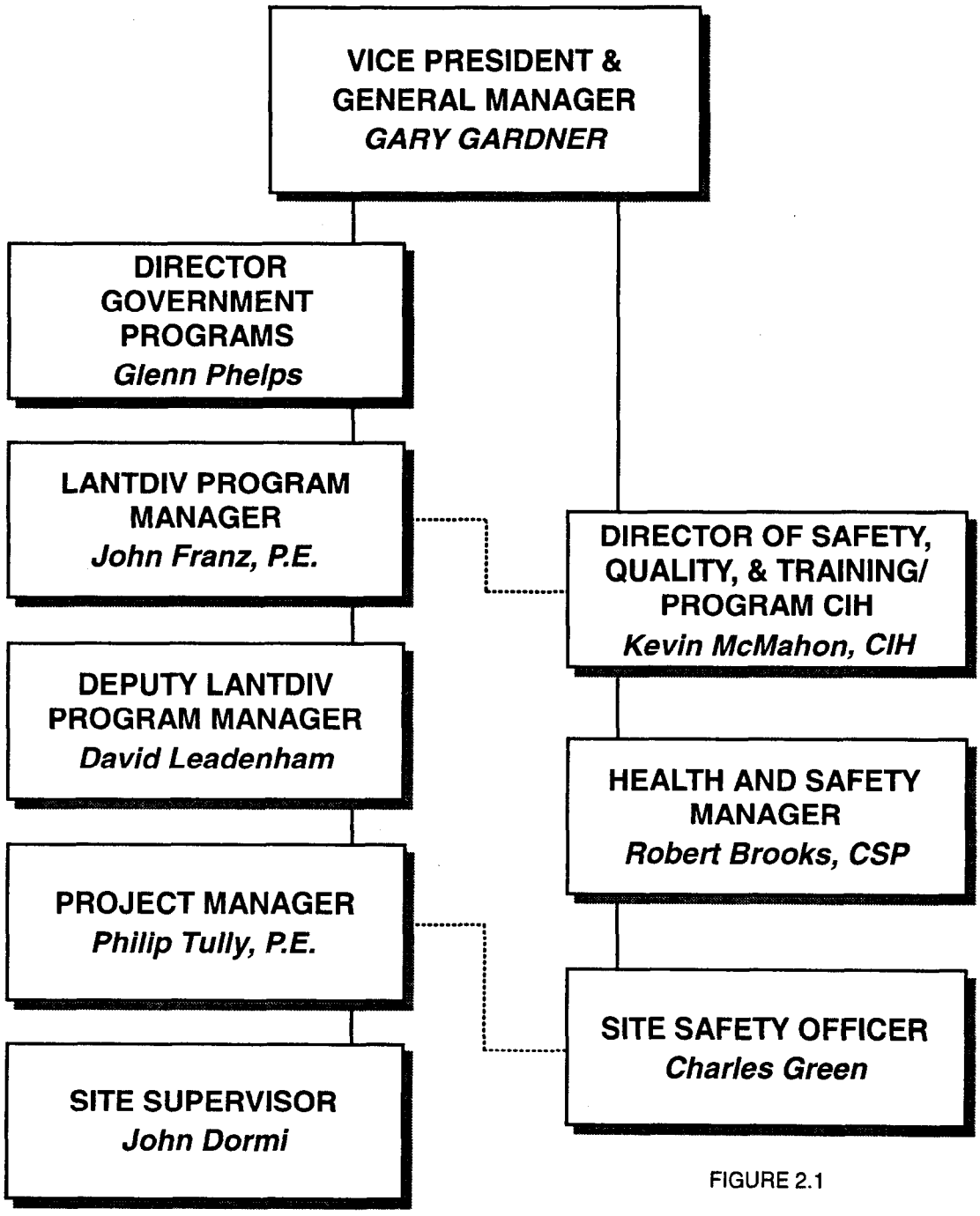

FIGURE 2.1

HEALTH & SAFETY ORGANIZATION
Remedial Action
Q-Area Drum Storage Area
Norfolk Naval Base
Norfolk, Virginia
Delivery Order 0073
OHM Project 17260

Prepared for

DEPARTMENT OF THE NAVY
ATLANTIC DIVISION
NAVAL FACILITIES ENGINEERING COMMAND
NORFOLK, VIRGINIA

3.0 JOB SAFETY ANALYSIS

This section outlines the potential chemical and physical hazards which workers may be exposed to during work on this project. Table 3.1 lists significant contaminants identified at the site. An MSDS list is included in Appendix C.

3.1 CHEMICAL HAZARDS

The routes of exposure for acetone, 1,2 dichloroethene, tetrachloroethylene, 1,1,1 trichloroethane, trichloroethene, vinyl chloride are primarily inhalation of vapor and skin contact with contaminated drilling spoils and groundwater. These contaminants are contained within the contaminated sediments, and groundwater at the site. Concentrations of tetrachloroethylene range from 866 mg/L to 4,800 mg/L. Exposure to acetone, 1,2 dichloroethene, tetrachloroethylene, 1,1,1 trichloroethane, trichloroethene, vinyl chloride may occur during installation of wells and through potential emmissions from the SVE system.

CHEMICAL	EXPOSURE ROUTES	PEL	HEALTH HAZARDS/ PHYSICAL HAZARDS
Acetone	Skin, eye, Inhalation, Ingestion	250 ppm	Narcotic in high concentrations; An irritant to the eyes, nose, throat, and central nervous system causing dizziness, vomiting, headache, and nausea; defats the skin leading to dermatitis
			A dangerous fire hazard, keep away from heat, flames, and other sources of ignition; Incompatible with strong oxidizers, strong bases, caustics, chlorine compounds, strong acids, and ammonia
1,2 Dichloroethene	Skin, eye, inhalation, ingestion	793 ppm	Irritation from skin contact; headache, nausea, vomiting, dizziness, and central nervous system depression; Long term exposure can effect the kidneys and liver
			Flammable liquid, keep away from sources of ignition. Will liberate toxic phosgene gas and hydrogen chloride when heated; Avoid contact with strong oxidizers and bases, aluminum, ammonia, and nitric acid
Tetrachloroethylene	Skin, eye, inhalation,	25 ppm	Headache, dizziness, vertigo, narcosis, unconsciousness; a skin and eye irritant, defatts skin tissue; affects the CNS; potential human carcinogen
			Hazardous chemical reactions with barium, lithium, berryllium; forms highly toxic and corrosive byproducts from sunlight, thermal decomposition, and exposure to electric arcs
1,1,1, Trichloro-ethane	Skin, eye, inhalation, ingestion	350 ppm	Headache, dizziness, visual disturbances, tremors, sleepiness, nausea, vomiting, irritation of eyes, dermatitis, cardiac arrhythmia, numbness/tingling of hands, feet, potential carcinogen
			Reacts with strong acids and bases, metals; flammable liquid

CHEMICAL	EXPOSURE ROUTES	PEL	HEALTH HAZARDS/ PHYSICAL HAZARDS
Trichloro-ethylene	Skin, eye, inhalation, ingestion	50 ppm	A skin and eye irritant; dermatitis; headache, vertigo, visual distortion, fatigue, nausea, vomiting, irregular heart rhythm
			A dangerous fire hazard, reacts with strong caustics and chemically reactive metals, will emit toxic phosgene gas when heated
Vinyl Chloride	Skin, eye, inhalation, ingestion	1 ppm	A carcinogen; headache, vertigo, narcosis, collapse; affects CNS; skin and eye irritation
			A severe fire and explosion hazard; reacts with copper, aluminum, and hydroquinone; forms toxic decomposition products when involved with fires or heat; HCl, carbon monoxide, and phosgene

The following general symptoms may indicate exposure to a hazardous material. Personnel will be removed from the work site and provided proper medical attention immediately if the following symptoms occur:

- Dizziness or stupor
- Nausea, headaches, or cramps
- Irritation of the eyes, nose, or throat
- Euphoria
- Chest pains and coughing
- Rashes or burns

3.2 PHYSICAL HAZARDS

To minimize physical hazards, OHM has developed standard safety protocols which will be followed at all times. Failure to follow safety protocols will result in expulsion of an employee from the site and appropriate disciplinary actions.

The SS and SSO will observe the general work practices of each crew member and equipment operator, and enforce safe procedures to minimize physical hazards. Hard hats, safety glasses, and steel-toe safety boots are required in all areas of the site. Site-specific hazards and all necessary precautions will be discussed at the daily safety meetings. The Health and Safety Procedures Manual for LANTDIV will be maintained at the project site as a reference document.

3.3 ENVIRONMENTAL HAZARDS

Environmental factors such as weather, wild animals, insects, and irritant plants pose a hazard when performing outdoor work. The SSO and SS will take all necessary measures to alleviate these hazards should they arise.

3.3.1 Heat Stress

The combination of warm ambient temperature and protective clothing result in the potential for heat stress. Heat stress disorders include:

- Heat rash
- Heat cramps
- Heat exhaustion
- Heat stroke

Heat stress prevention is outlined in procedure No. 22 of the OHM Corp. LANTDIV Health and Safety Procedures manual. This information will be reviewed during safety meetings. Workers will be encouraged to increase consumption of water and electrolyte-containing beverages (e.g., Gatorade).

It is recommended that workers break approximately every 2 hours for 10 to 15 minute rest periods when temperatures rise above 72.5 degrees F. and protective clothing is worn. In addition, workers are encouraged to take rests whenever they feel any adverse effects that may be heat-related. The frequency of breaks may need to be increased upon worker recommendation to the SSO and SS. Heat stress can be prevented by assuring an adequate work/rest schedule; guidelines are printed below.

AMBIENT TEMPERATURE	NO CHEMICAL PROTECTIVE CLOTHING (LEVEL D PPE)	CHEMICAL PROTECTIVE CLOTHING (D+/C/B/A)
90° F or above	After 45 minutes of work	After 15 minutes of work
87.5 F-90 F	After 60 minutes of work	After 30 minutes of work
82.5-87.5 F	After 90 minutes of work	After 60 minutes of work
77.5-82.5 F	After 120 minutes of work	After 90 minutes of work
72.5-77.5 F	After 150 minutes of work	After 120 minutes of work

The work/rest schedule can be calculated based on heat stress monitoring results. Monitoring consists of taking the radial pulse of a worker for 30 seconds immediately after exiting the work area. The frequency of monitoring is provided herein.

If the heart rate exceeds 110 beats per minute at the beginning of the rest period, shorten the next work cycle by ⅓ and keep the rest period the same. If the heart rate still exceeds 110 beats per minute at the next rest period, increase the following rest period by ⅓. The initial rest period should be at least 10 minutes.

Body temperature measured orally or through the ear canal may also be monitored to assess heat stress. Workers should not be permitted to continue work when their body temperature exceeds 100.4 F (38C). Monitoring should be conducted at the intervals given above.

Monitoring for heat stress will begin when the ambient temperature reaches or exceeds 70 degrees Fahrenheit when wearing chemical protective clothing, or 80 degrees Fahrenheit for site activities performed with no chemical protective clothing (Level D). Monitoring will include pulse rate, weight loss, oral temperature and signs and symptoms of heat stress. See Procedure 22 LANTDIV Health and Safety Procedures Manual.

3.3.2 Noise

Hearing protection is required for workers operating or working near heavy equipment, where the noise level is greater than 85 dbA (TWA) as well as personnel working around heavy equipment. The SSO will determine the need for and appropriate testing procedures, i.e., sound level meter and/or dosimeter for noise measurement.

3.4 VEHICLE SAFETY MANAGEMENT

Motor vehicle incidents are the number one cause of occupational fatalities. OHM employees involved in the operation and use of OHM and/or leased or rented vehicles will comply with the OHM Vehicle Management Policy. OHM requires employees to use seat belts at all times when traveling in OHM owned or leased/rented vehicles. The SS and/or SSO will develop a parking area plan, including backing vehicles into parking spaces, using spotters for backing vehicles and policy mandated vehicle inspections.

OHM employees are expected to incorporate safe actions and preparations to avoid vehicle accidents and personal injury during work and off hours. Breaks should be planned into lengthy job mobilizations and demobilizations, including rotation of drivers at regular intervals. If parking areas are busy or crowded and more than one worker is traveling in the same vehicle, one worker should remain outside the vehicle as it leaves the parking space to assist the driver with traffic observation. Vehicles traveling before dawn and at dusk in rural or wooded areas should be prepared for wild life, e.g. deer, crossing roadways.

OHM employees arriving at work areas should park vehicles away from delivery, heavy equipment and vehicle loading, unloading locations to prevent parked vehicles from damage by various deliveries. Heavy equipment operators should inspect areas and request vehicles to be moved or spotters used if necessary, to maneuver equipment in tight areas. Employees who observe near misses or potential risks to parked or moving vehicles must report these to the SS or SSO immediately.

OHM employees are expected to use the vehicle inspection form and check/test the safety systems on the vehicle on a daily basis. Check the following: brakes, mirrors, seat belts, tires, leakage from the undercarriage, lights and turn signals. Vehicles with safety deficiencies must be reported immediately and not driven until properly repaired. Vehicles running errands from different project sites should have telephone numbers of the job site in the vehicle in case calls for assistance are required.

Because of the different ways alcohol can affect behavior, even in very small amounts, the best and safest course is not to drink before driving. At OHM, a driver with blood alcohol concentration (BAC) over 0.04% is considered to be under the influence and subject to disciplinary action. Personnel involved in motor vehicle incidents are subject to drug and alcohol testing.

Weather conditions can have a profound effect on driving. On slippery roads, drive more slowly. Stop and turn with care. Keep several car lengths from other vehicles. At speeds in excess of 35 mph, the chances of hydroplaning increase with speed. In general, keep back 1 car length for every 10 mph to prevent striking the car ahead.

In the event of a vehicle incident, notify your Site Supervisor ***immediately*** and complete all required reports.

3.5 TASK-SPECIFIC JOB SAFETY ANALYSES

This section of the Site-Specific HASP provides a breakdown of the hazards and control measures for each principal task. These Job Safety Analyses are general in nature and must be made project specific by the Site Supervisor prior to each task. The Job Safety Analyses will be field checked by the supervisor on an ongoing basis and revised as necessary. All revisions will be communicated to the work crew.

3.5.1	JOB SAFETY ANALYSIS FOR SITE PREPARATION			
AIR MONITORING: "ACTION LEVELS" **PID: <1 PPM, LEVEL D; ≥1 PPM <5 PPM, LEVEL C; >5 PPM LEVEL B** **LEL/O_2: ≥10% LEL, STOP WORK, EVACUATE; <20.9% O_2, LEVEL B; <19.5% O_2, MECHANICAL VENTILATION, CONSTANT MONITORING**				
Task Breakdown	**Potential Hazards**	**Hazard Control Measures**	**Personal Protective Equipment**	**Air Monitoring Devices**
Equipment/ Facility Set-up	Slips, Trips, Falls	• Clear walkways work areas of equipment, tools, vegetation, excavated material and debris • Mark, identify, or barricade other obstructions		
	Electrical Shock	• De-energize or shut off utility lines at their source before work begins • Use double insulated or properly grounded electric power-operated tools • Maintain tools in a safe condition • Provide an equipment-grounding conductor program or employ ground-fault circuit interrupters • Use qualified electricians to hook up electrical circuits • Inspect all extension cords daily for structural integrity, ground continuity, and damaged insulation • Cover or elevate electric wire or flexible cord passing through work areas to protect from damage • Keep all plugs and receptacles out of water • Use approved water-proof, weather-proof type if exposure to moisture is likely • Inspect all electrical power circuits prior to commencing work • Follow Lockout-Tagout procedures in accordance with OHM Health and Safety Procedures #38		
	Handling Heavy Objects	• Observe proper lifting techniques • Obey sensible lifting limits (60 lb. maximum per person manual lifting) • Use mechanical lifting equipment (hand carts, trucks) to move large, awkward loads		
	Sharp Objects	• Wear cut resistant work gloves when the possibility of lacerations or other injury may be caused by sharp edges or objects • Maintain all hand and power tools in a safe condition • Keep guards in place during use	Leather gloves	

3.5.1	JOB SAFETY ANALYSIS FOR SITE PREPARATION			
AIR MONITORING: "ACTION LEVELS" **PID: <1 PPM, LEVEL D; ≥1 PPM <5 PPM, LEVEL C; >5 PPM LEVEL B** **LEL/O_2: ≥10% LEL, STOP WORK, EVACUATE; <20.9% O_2, LEVEL B; <19.5% O_2, MECHANICAL VENTILATION, CONSTANT MONITORING**				
Task Breakdown	**Potential Hazards**	**Hazard Control Measures**	**Personal Protective Equipment**	**Air Monitoring Devices**
Equipment/ Facility Set-up (Continued)	High Noise Levels	• Use hearing protection when exposed to excessive noise levels (greater than 85 dBA over an 8-hour work period)	Ear plugs	
	High Ambient Temperature	• Monitor for Heat stress in accordance with OHM Health and Safety Procedures # 22 • Provide fluids to prevent worker dehydration		

3.5.2	JOB SAFETY ANALYSIS FOR SVE WELL INSTALLATION			
AIR MONITORING: "ACTION LEVELS" **PID: <1 PPM, LEVEL D; ≥1 PPM <5 PPM, LEVEL C; >5 PPM LEVEL B** **LEL/O_2: ≥10% LEL, STOP WORK, EVACUATE; <20.9% O_2, LEVEL B; <19.5% O_2, MECHANICAL VENTILATION, CONSTANT MONITORING**				
Task Breakdown	**Potential Hazards**	**Hazard Control Measures**	**Personal Protective Equipment**	**Air Monitoring Devices**
Well Installation	Struck by/ Against Flying Particles, Protruding Objects	• Wear Hard hats, safety glasses with side shields and steel-toe safety boots at all times • Wear splash shields and safety goggles when cleaning, decontaminating drilling equipment	Hard hat, Face shield, Steel-toe work boots	
	Underground Utilities	• Identify all underground utilities around the excavation site before work commences • Cease work immediately if unknown utility markers are uncovered • Use manual excavation within 3 feet of known utilities		
	Handling Heavy Objects	• Observe proper lifting techniques • Obey sensible lifting limits (60 lb. maximum per person manual lifting) • Use mechanical lifting equipment (hand carts, trucks) to move large, awkward loads		
	Caught In/ Between Moving Parts	• Identify and understand parts of equipment which may cause crushing, pinching, rotating or similar injuries • Assure guards are in place to protect from these parts of equipment during operation • Provide and use proper work gloves when the possibility of pinching, or other injury may be caused by moving/ handling large or heavy objects • Maintain all equipment in a safe condition • Keep all guards in place during use • De-energize and lock-out machinery before maintenance or service		
	Sharp Objects	• Wear cut resistant work gloves when the possibility of lacerations or other injury may be caused by sharp edges or objects • Maintain all tools in a safe condition • Keep guards in place during use	Leather gloves	

3.5.2	JOB SAFETY ANALYSIS FOR SVE WELL INSTALLATION			
AIR MONITORING: "ACTION LEVELS" **PID: <1 PPM, LEVEL D; ≥1 PPM <5 PPM, LEVEL C; >5 PPM LEVEL B** **LEL/O_2: ≥10% LEL, STOP WORK, EVACUATE; <20.9% O_2, LEVEL B; <19.5% O_2, MECHANICAL VENTILATION, CONSTANT MONITORING**				
Task Breakdown	**Potential Hazards**	**Hazard Control Measures**	**Personal Protective Equipment**	**Air Monitoring Devices**
Well Installation (Continued)	Inhalation and Contact with Hazardous Substances	• Provide workers proper skin, eye and respiratory protection based on the exposure hazards present (See Section 5.0 HASP) • Review hazardous properties of site contaminants before starting work	Polycoated tyvek coveralls, nitrile gloves, latex booties or robars	PID, Drager Tubes
	Fire/ Explosion	• Test atmosphere with combustible gas meter • Eliminate sources of ignition from the work area • Prohibit smoking in well drilling area • Provide ABC (or equivalent) fire extinguishers for all work and flammable storage areas, fuel powered generators and compressors • Store flammable liquids in well ventilated areas • Prohibit storage, transfer of flammable liquids in plastic containers • Post "NO SMOKING" signs • Store combustible materials away from flammables • Store all compressed gas cylinders upright, caps in place when not in use • Separate Flammables and Oxidizers by 20 feet minimum		
	High Ambient Temperature	• Monitor for Heat stress in accordance with OHM Health and Safety Procedures # 22 • Provide fluids to prevent worker dehydration		

3.5.3 JOB SAFETY ANALYSIS FOR ASPHALT/CONCRETE REMOVAL/REPLACEMENT

AIR MONITORING: "ACTION LEVELS"
PID: <1 PPM, LEVEL D; ≥1 PPM <5 PPM, LEVEL C; >5 PPM LEVEL B
LEL/O_2: ≥10% LEL, STOP WORK, EVACUATE; <20.9% O_2, LEVEL B; <19.5% O_2, MECHANICAL VENTILATION, CONSTANT MONITORING

Task Breakdown	Potential Hazards	Hazard Control Measures	Personal Protective Equipment	Air Monitoring Devices
Asphalt/ Concrete Removal/ Replacement	Struck by/ Against Heavy Equipment, Protruding Objects	• Use reflective warning vests when exposed to vehicular traffic • Avoid equipment swing areas • Make eye contact with operators before approaching equipment • Barricade or enclose the work area • Restrict entry to the work area to authorized personnel • Understand and review hand signals	Warning vests, Hard hat, goggles, Face shield, Steel-toe work boots	
	Handling Heavy Objects	• Observe proper lifting techniques • Obey sensible lifting limits (60 lb. maximum per person manual lifting) • Use mechanical lifting equipment (hand carts, trucks) to move large, awkward loads		
	Burns	• Use proper work gloves, face shield/safety goggles, and clothing to protect workers from skin burns when paving with hot asphalt	Leather gloves, Safety goggles, face shield	
	Slips, Trips, Falls	• Clear walkways, work areas of equipment, tools, debris, & other materials • Mark, identify, or barricade other obstructions		
	Inhalation and Contact with Nusiance Dust	• Provide workers proper skin, eye and respiratory protection based on the exposure hazards present • Review hazardous properties of site contaminants with workers before operations begin	Long sleeve shirt or jacket, long pants, goggles and face shield (See Section 5.0 HASP)	

3.5.3 JOB SAFETY ANALYSIS FOR ASPHALT/CONCRETE REMOVAL/REPLACEMENT

AIR MONITORING: "ACTION LEVELS"
PID: <1 PPM, LEVEL D; ≥1 PPM <5 PPM, LEVEL C; >5 PPM LEVEL B
LEL/O_2: ≥10% LEL, STOP WORK, EVACUATE; <20.9% O_2, LEVEL B; <19.5% O_2, MECHANICAL VENTILATION, CONSTANT MONITORING

Task Breakdown	Potential Hazards	Hazard Control Measures	Personal Protective Equipment	Air Monitoring Devices
Asphalt/ Concrete Removal/ Replacement (Continued)	Fires	• Eliminate sources of ignition from the work area • Prohibited smoking • Provide ABC (or equivalent) fire extinguishers in all work areas, flammable storage areas, generator and compressor locations • Store flammable liquids in well ventilated areas • Prohibit storage, transfer of flammable liquids in plastic containers • Post "NO SMOKING" signs • Store combustible materials away from flammables		LEL/O_2
	High Ambient Temperature	• Monitor for Heat stress in accordance with OHM Health and Safety Procedures # 22 • Provide fluids to prevent worker dehydration		

3.5.4	JOB SAFETY ANALYSIS FOR CONCRETE SLAB PREPARATION			
AIR MONITORING: "ACTION LEVELS" **PID: <1 PPM, LEVEL D; ≥1 PPM <5 PPM, LEVEL C; >5 PPM LEVEL B** **LEL/O_2: ≥10% LEL, STOP WORK, EVACUATE; <20.9% O_2, LEVEL B; <19.5% O_2, MECHANICAL VENTILATION, CONSTANT MONITORING**				
Task Breakdown	**Potential Hazards**	**Hazard Control Measures**	**Personal Protective Equipment**	**Air Monitoring Devices**
Concrete Slab Preparation	Slips, Trips, Falls	• Clear walkways, work areas of equipment, tools, debris, and excavated material • Mark, identify, or barricade other obstructions		
	Struck by/ Against Heavy Equipment, Flying Debris, Protruding Objects	• Use reflective warning vests when exposed to vehicular traffic • Isolate equipment swing areas • Isolate areas under suspended loads • Make eye contact with operators before approaching equipment • Barricade or enclose the work area • Restrict entry to the work area to authorized personnel during concrete pouring activities • Wear hard hats, safety glasses with side shields, and steel-toe safety boots at all times • Understand and review hand signals	Warning vests, hard hat, safety glasses	
	Inhalation and Contact with Concrete Dust	• Provide workers proper skin, eye and respiratory protection based on the exposure hazards present • Review hazardous properties of site contaminants with workers before operations begin	Work clothes, latex boots (See Section 5.0 HASP)	
	High Ambient Temperature	• Monitor for Heat stress in accordance with OHM Health and Safety Procedures # 22 • Provide fluids to prevent worker dehydration		

3.5.5	JOB SAFETY ANALYSIS FOR SVE TRENCH EXCAVATION			
AIR MONITORING: "ACTION LEVELS" **PID: <1 PPM, LEVEL D; ≥1 PPM <5 PPM, LEVEL C; >5 PPM LEVEL B** **LEL/O_2: ≥10% LEL, STOP WORK, EVACUATE; <20.9% O_2, LEVEL B; <19.5% O_2, MECHANICAL VENTILATION, CONSTANT MONITORING**				
Task Breakdown	**Potential Hazards**	**Hazard Control Measures**	**Personal Protective Equipment**	**Air Monitoring Devices**
Excavation Activities	Underground Utilities	• Identify all underground utilities around the excavation site before work commences (contact VA utilities 800-552-7001; 3 working days notice- see Appendix G) • Cease work immediately if unknown utility markers are uncovered • Use manual excavation within 3 feet of known utilities		
	Struck By/ Against Heavy Equipment	• Use reflective warning vests when exposed to vehicular traffic • Isolate equipment swing areas • Make eye contact with operators before approaching equipment • Understand and review hand signals	Warning vests, hard hat, safety glasses	
	Sharp Objects	• Wear cut resistant work gloves when the possibility of lacerations or other injury may be caused by sharp edges or objects • Maintain all hand and power tools in a safe condition • Keep guards in place during use	Leather gloves	
	High Noise Levels	• Use hearing protection when exposed to excessive noise levels (greater than 85 dBA over an 8-hour work period)	Ear plugs	
	Slips, Trips, Falls	• Clear walkways, work areas of equipment, vegetation, excavated material, tools, and debris • Mark, identify, or barricade other obstructions		
	Handling Heavy Objects	• Observe proper lifting techniques • Obey sensible lifting limits (60 lb. maximum per person manual lifting) • Use mechanical lifting equipment (hand carts, trucks) to move large, awkward loads		

3.5.5	JOB SAFETY ANALYSIS FOR SVE TRENCH EXCAVATION			
AIR MONITORING: "ACTION LEVELS" **PID: <1 PPM, LEVEL D; ≥1 PPM <5 PPM, LEVEL C; >5 PPM LEVEL B** **LEL/O_2: ≥10% LEL, STOP WORK, EVACUATE; <20.9% O_2, LEVEL B; <19.5% O_2, MECHANICAL VENTILATION, CONSTANT MONITORING**				
Task Breakdown	**Potential Hazards**	**Hazard Control Measures**	**Personal Protective Equipment**	**Air Monitoring Devices**
Excavation Activities (Continued)	Inhalation and Contact with Hazardous Substances	• Provide workers proper skin, eye and respiratory protection based on the exposure hazards present • Review hazardous properties of site contaminants with workers before operations begin • Dampen soil using light water spray to prevent fugitive dust emissions • Cover stockpiled soil with plastic sheeting to prevent fugitive dust emissions	Tyvek coveralls, nitrile or latex gloves, neoprene or latex boots (See Section 5.0 HASP)	LEL/O_2, PID
	High Ambient Temperature	• Monitor for Heat stress in accordance with OHM Health and Safety Procedures # 22 • Provide fluids to prevent worker dehydration		
Backfilling	Slips, Trips, Falls	• Clear walkways, work areas of equipment, vegetation, excavated material, tools, and debris • Mark, identify, or barricade other obstructions		
	Struck By/ Against Heavy Equipment	• Use reflective warning vests worn when exposed to vehicular traffic • Isolate equipment swing areas • Make eye contact with operators before approaching equipment • Understand and review hand signals	Warning vests, hard hat safety glasses	
	Sharp Objects	• Wear cut resistant work gloves when the possibility of lacerations or other injury may be caused by sharp edges or objects • Maintain all hand and power tools in a safe condition • Keep guards in place during use	Leather gloves	

3.5.6 JOB SAFETY ANALYSIS FOR SYSTEM CONSTRUCTION ACTIVITIES (ELECTRICAL\MECHANICAL\HVAC INSTALLATION)

AIR MONITORING: "ACTION LEVELS"
PID: <1 PPM, LEVEL D; ≥1 PPM <5 PPM, LEVEL C; >5 PPM LEVEL B
LEL/O_2: ≥10% LEL, STOP WORK, EVACUATE; <20.9% O_2, LEVEL B; <19.5% O_2, MECHANICAL VENTILATION, CONSTANT MONITORING

Task Breakdown	Potential Hazards	Hazard Control Measures	Personal Protective Equipment	Air Monitoring Devices
System Construction Activities	Slips, Trips, Falls	• Clear walkways, work areas of equipment, tools, construction debris and other materials • Mark, identify, or barricade other obstructions		
	Struck by/ Against Heavy Equipment, Falling Debris, Protruding Objects	• Use reflective warning vests when exposed to vehicular traffic • Isolate equipment swing areas • Make eye contact with operators before approaching equipment • Barricade or enclose the work area • Restrict work area entry to authorized personnel only during construction activities • Wear hard hats, safety glasses with side shields, and steel-toe safety boots • Understand and review hand signals	Warning vests, hard hat safety glasses, goggles and face shield, steel-toe safety shoes	
	Sharp Objects	• Wear cut resistant work gloves when the possibility of lacerations or other injury may be caused by sharp edges or objects • Maintain all hand and power tools in a safe condition • Keep guards in place during use	Leather gloves	
	Handling Heavy Objects	• Observe proper lifting techniques • Obey sensible lifting limits (60 lb. maximum per person manual lifting) • Use mechanical lifting equipment (hand carts, trucks) to move large, awkward loads		
	Burns	• Use proper work gloves, face shield/safety goggles, and leather apron to protect workers from skin burns when welding, cutting, and burning	face shield and goggles	

3.5.6 JOB SAFETY ANALYSIS FOR SYSTEM CONSTRUCTION ACTIVITIES (ELECTRICAL\MECHANICAL\HVAC INSTALLATION)

AIR MONITORING: "ACTION LEVELS"
PID: <1 PPM, LEVEL D; ≥1 PPM <5 PPM, LEVEL C; >5 PPM LEVEL B
LEL/O_2: ≥10% LEL, STOP WORK, EVACUATE; <20.9% O_2, LEVEL B; <19.5% O_2, MECHANICAL VENTILATION, CONSTANT MONITORING

Task Breakdown	Potential Hazards	Hazard Control Measures	Personal Protective Equipment	Air Monitoring Devices
System Construction Activities (Continued)	Fires	• Eliminate sources of ignition from the work area • Prohibit smoking • Provide ABC (or equivalent) fire extinguishers for all work areas, flammable storage areas, fuel powered generator and compressor locations • Store flammable liquids in well ventilated areas • Prohibit storage, transfer of flammable liquids in plastic containers • Post "NO SMOKING" signs • Store combustible materials away from flammables • Store all compressed gas cylinders upright, secure, caps in place when not in use • Separate Flammables and Oxidizers by 20 feet minimum		
	High Noise Levels	• Use hearing protection when exposed to excessive noise levels (greater than 85 dBA over an 8-hour work period)	Ear plugs	

3.5.6 JOB SAFETY ANALYSIS FOR SYSTEM CONSTRUCTION ACTIVITIES (ELECTRICAL\MECHANICAL\HVAC INSTALLATION)

AIR MONITORING: "ACTION LEVELS"
PID: <1 PPM, LEVEL D; ≥1 PPM <5 PPM, LEVEL C; >5 PPM LEVEL B
LEL/O_2: ≥10% LEL, STOP WORK, EVACUATE; <20.9% O_2, LEVEL B; <19.5% O_2, MECHANICAL VENTILATION, CONSTANT MONITORING

Task Breakdown	Potential Hazards	Hazard Control Measures	Personal Protective Equipment	Air Monitoring Devices
System Construction Activities (Continued)	Electrical Shock	• De-energize or shut off utility lines at their source before work begins • Use double insulated or properly grounded electric power-operated tools • Maintain tools in a safe condition • Inspect all electrical power circuits prior to commencing work • Provide an equipment-grounding conductor program or employ ground-fault circuit interrupters • Use qualified electricians to hook up electrical circuits • Inspect all extension cords daily for structural integrity, ground continuity, and damaged insulation • Cover or elevate electric wire or flexible cord passing through work areas to protect from damage • Keep all plugs and receptacles out of water • Use approved water-proof, weather-proof type if exposure to moisture is likely • Follow Lockout-Tagout procedures in accordance with OHM Health and Safety Procedures # 6-4		
	Structural Collapse	• Barricade or enclose the work areas • Restrict entry to authorized personnel only during construction activities • Wear hard hats, safety glasses with side shields, and steel-toe safety boots • Understand and review hand signals	Hard hat, Safety glasses	

3.5.6 JOB SAFETY ANALYSIS FOR SYSTEM CONSTRUCTION ACTIVITIES (ELECTRICAL\MECHANICAL\HVAC INSTALLATION)

AIR MONITORING: "ACTION LEVELS"
PID: <1 PPM, LEVEL D; ≥1 PPM <5 PPM, LEVEL C; >5 PPM LEVEL B
LEL/O_2: ≥10% LEL, STOP WORK, EVACUATE; <20.9% O_2, LEVEL B; <19.5% O_2, MECHANICAL VENTILATION, CONSTANT MONITORING

Task Breakdown	Potential Hazards	Hazard Control Measures	Personal Protective Equipment	Air Monitoring Devices
System Construction Activities (Continued)	Caught In/ Between Moving Parts	• Identify and understand parts of equipment which may cause crushing, pinching, rotating or similar motions • Assure guards are in place to protect from these parts of equipment during operation • Provide and use proper work gloves when the possibility of pinching, or other injury may be caused by moving/ handling large or heavy objects • Maintain all equipment in a safe condition • Keep all guards in place during use • De-energize and lock-out machinery before maintenance or service	Leather gloves	
	High Ambient Temperature	• Monitor for Heat stress in accordance with OHM Health and Safety Procedures # 22 • Provide fluids to prevent worker dehydration		

3.5.7 JOB SAFETY ANALYSIS FOR SVE PIPING INSTALLATION

AIR MONITORING: "ACTION LEVELS"
PID: <1 PPM, LEVEL D; ≥1 PPM <5 PPM, LEVEL C; >5 PPM LEVEL B
LEL/O_2: ≥10% LEL, STOP WORK, EVACUATE; <20.9% O_2, LEVEL B; <19.5% O_2, MECHANICAL VENTILATION, CONSTANT MONITORING

Task Breakdown	Potential Hazards	Hazard Control Measures	Personal Protective Equipment	Air Monitoring Devices
Piping Installation	Struck by/ Against Heavy Equipment, Protruding/ Falling Objects	• Use reflective warning vests when exposed to vehicular traffic • Isolate equipment swing areas • Make eye contact with operators before approaching equipment • Barricade or enclose the work area • Restrict entry to the work area authorized personnel • Wear hard hats, safety glasses with side shields, and steel-toe safety boots • Understand and review hand signals	Warning vests, Hard hat, Safety glasses, steel toe shoes	
	Slips, Trips, Falls	• Clear walkways, work areas of equipment, vegetation, excavated material, tools, and debris • Mark, identify, or barricade other obstructions		
	Handling Heavy Objects	• Observe proper lifting techniques • Obey sensible lifting limits (60 lb. maximum per person manual lifting) • Use mechanical lifting equipment (hand carts, trucks) to move large, awkward loads		
Piping Installation (Continued)	Sharp Objects	• Wear cut resistant work gloves when the possibility of lacerations or other injury may be caused by sharp edges or objects • Maintain all hand and power tools in a safe condition • Keep guards in place during use	Leather gloves,	
	Burns	• Use proper work gloves, face shield/safety goggles, and leather apron to protect workers from skin burns when welding, cutting, and burning	Hard hat, Safety goggles, Face shield	
	High Noise Levels	• Use hearing protection when exposed to excessive noise levels (greater than 85 dBA over an 8-hour work period)	Ear plugs	

3.5.7	JOB SAFETY ANALYSIS FOR SVE PIPING INSTALLATION			
AIR MONITORING: "ACTION LEVELS" **PID: <1 PPM, LEVEL D; ≥1 PPM <5 PPM, LEVEL C; >5 PPM LEVEL B** **LEL/O_2: ≥10% LEL, STOP WORK, EVACUATE; <20.9% O_2, LEVEL B; <19.5% O_2, MECHANICAL VENTILATION, CONSTANT MONITORING**				
Task Breakdown	**Potential Hazards**	**Hazard Control Measures**	**Personal Protective Equipment**	**Air Monitoring Devices**
Piping Installation (Continued)	Handling Heavy Objects	• Observe proper lifting techniques • Obey sensible lifting limits (60 lb. maximum per person manual lifting) • Use mechanical lifting equipment (hand carts, trucks) to move large, awkward loads		

3.5.8	JOB SAFETY ANALYSIS FOR SVE STARTUP, OPERATIONS AND MAINTENANCE			
AIR MONITORING: "ACTION LEVELS" **PID: <1 PPM, LEVEL D; ≥1 PPM <5 PPM, LEVEL C; >5 PPM LEVEL B** **LEL/O_2: ≥10% LEL, STOP WORK, EVACUATE; <20.9% O_2, LEVEL B; <19.5% O_2, MECHANICAL VENTILATION, CONSTANT MONITORING**				
Task Breakdown	**Potential Hazards**	**Hazard Control Measures**	**Personal Protective Equipment**	**Air Monitoring Devices**
SVE System Startup, Operations and Maintenance	Slips, Trips, Falls	• Clear walkways, work areas of equipment, tools, debris and construction materials • Mark, identify, or barricade other obstructions		
	High Noise Levels	• Use hearing protection when exposed to excessive noise levels (greater than 85 dBA over an 8-hour work period)	Ear plugs	
	Struck by/ Against Heavy Equipment, Flying Debris, Protruding Objects	• Use reflective warning vests when exposed to vehicular traffic • Isolate equipment swing areas • Make eye contact with operators before approaching equipment • Barricade or enclose the drilling area • Restrict entry to the work area to authorized personnel during drilling activities • Wear hard hats, safety glasses with side shields, or splash/face shields and goggles, and steel-toe safety boots at all times • Understand and review hand signals	Warning vests, hard hat, safety glasses, goggles and face shield	
	Inhalation and Contact with Hazardous Substances	• Provide workers proper skin, eye and respiratory protection based on the exposure hazards present • Review hazardous properties of site contaminants with workers before operations begin	Tyvek coveralls, nitrile gloves, neoprene or latex boots (See Section 5.0 HASP)	LEL/O_2, PID
	Handling Heavy Objects	• Observe proper lifting techniques • Obey sensible lifting limits (60 lb. maximum per person manual lifting) • Use mechanical lifting equipment (hand carts, trucks) to move large, awkward loads		
SVE System Operations and Maintenance (Continued)	High Ambient Temperature	• Monitor for Heat stress in accordance with OHM Health and Safety Procedures # 22 • Provide fluids to prevent worker dehydration		

3.5.9	JOB SAFETY ANALYSIS FOR SITE RESTORATION			
AIR MONITORING: "ACTION LEVELS" **PID: <1 PPM, LEVEL D; ≥1 PPM <5 PPM, LEVEL C; >5 PPM LEVEL B** **LEL/O_2: ≥10% LEL, STOP WORK, EVACUATE; <20.9% O_2, LEVEL B; <19.5% O_2, MECHANICAL VENTILATION, CONSTANT MONITORING**				
Task Breakdown	**Potential Hazards**	**Hazard Control Measures**	**Personal Protective Equipment**	**Air Monitoring Devices**
Site Restoration	Struck by, Against Heavy Equipment, Protruding Objects	• Use reflective warning vests when exposed to vehicular traffic • Avoid equipment swing areas • Make eye contact with operators before approaching equipment • Wear hard hats, safety glasses with side shields, or splash/face shields and goggles, and steel-toe safety boots at all times • Understand and review hand signals	Warning vests, Hard hat, Safety glasses	
	Slips, Trips, Falls	• Clear, walkways of equipment, tools, debris, other materials • Mark, identify, or barricade other obstructions		
	High Noise Levels	• Use hearing protection when exposed to excessive noise levels (greater than 85 dBA over an 8-hour work period)	Ear plugs	
	Handling Heavy Objects	• Observe proper lifting techniques • Obey sensible lifting limits (60 lb per person for manual lifting) • Use mechanical lifting equipment (hand carts, trucks) to move large, awkward loads		
	Contact Dermatitis	• Wear PPE to avoid skin contact with contaminated soil, plants, or other skin irritants • Identify and review poisonous plants with workers	Tyvek coveralls, duct tape bottom of coveralls to boots or latex boot covers	
	High Ambient Temperature	• Monitor for Heat stress in accordance with OHM Health and Safety Procedures # 22 • Provide fluids to prevent worker dehydration		

3.6 ACCIDENT PREVENTION

This site specific Health and Safety Plan has been developed with accident prevention as the primary goal. Details are discussed throughout this HASP. This section will outline the Accident Prevention Plan established for this project.

3.6.1 Administrative Responsibilities

The Project Manager is ultimately responsible for the safety and health of site personnel. The PM is to provide the materials and maintenance of equipment necessary to enhance and maintain safe site and work conditions.

The SS has the responsibility and the authority to control the day to day remediation activities in the field with respect to safety. The SS reports directly to the Project Manager. The SS monitors employees for signs of heat stress, excessive fatigue, and obvious outward signs of chemical exposure. In addition, the SS ensures that equipment brought to the site is in proper working condition and inspected regularly. These responsibilities will be shared by the Site Foremen.

The Site Safety Officer reports to the Project Manager and the Health and Safety Manager and is responsible to point out unsafe conditions that may pose a hazard to personnel or the public. The SSO is required to conduct regular safety inspections. Accident investigation will be performed by the SSO, and the SS, or both.

3.6.2 Phase Safety Plans (Job Safety Analyses)

Site-Specific Phase Safety Plans (Job Safety Analyses) will be developed for each contract activity and operation occurring in each major phase of work. The Phase Safety Plan for a specific task will be developed utilizing the job safety analyses presented in Section 3.4. The following areas will be addressed:

- Identify activity being performed; Sequence of work
- Hazards to be controlled in each activity
- Hazard control measures

The analysis will be discussed with all site personnel performing the task and will be documented in a site log. Prior to work on site, all site personnel will undergo a safety and health orientation including discussion of the HASP and site conditions. Prior to each shift, a daily safety meeting will be held discussing the previous day's and the current days's health and safety issues.

3.6.3 Subcontractors

All subcontractor employees are subject to the same training and medical surveillance requirements as OHM personnel depending on job activity. All subcontractor personnel will be required to sign in daily and be required to attend a daily meeting discussing operations and safety issues. All subcontractors involved in construction/remedial activities will be required to submit a Subcontractor Safety Prequalification Questionnaire prior to the award of a contract. Subcontractors will submit Job Safety analyses for their work activities to the OHM SS. The subcontractor reports directly to the OHM Project Manager. All incidents involving subcontractor employees shall be reported to the OHM Site Supervisor and a copy of the subcontractor's injury/illness report shall be submitted to the OHM SS within 24 hours.

3.6.4 Local Requirements

OHM will comply with any applicable local requirements such as noise control and traffic rules at the site. Traffic control will be developed as is needed for specific tasks.

3.6.5 Housekeeping

The project site will be kept in a neat and orderly fashion to prevent common injuries due to slips, trips, and falls, accumulation of trash to keep insects away, and to maintain a professional work site. Personnel shall not leave a work area in a disorderly condition. The SS responsible for housekeeping.

3.6.6 Emergency and Contingency Plan

OHM has developed an emergency contingency plan provided in section 8.0 of this HASP.

3.6.7 Safety Inspections

The Site Supervisor will perform regular safety inspections. A report, including results of the inspection and any corrective actions taken, will be kept in the project files. A copy will be provided to the client representative. Identified safety deficiencies and corrective measures will also be recorded in the "Contractors QC Report."

4.0 WORK AND SUPPORT AREAS

To prevent migration of contamination from personnel and equipment work areas will be clearly specified prior to beginning operations. OHM has designated work areas or zones as suggested by the NIOSH/OSHA/USCG/EPA'S document, titled "Occupational Safety and Health Guidance Manual for Hazardous Waste Site Activities." Each work area will be divided into three zones as follows:

- An Exclusion or "hot" Zone (EZ)
- A Contamination Reduction Zone (CRZ)
- A Support Zone (SZ)

4.1 EXCLUSION ZONE(EZ)

The EZ is the area suspected of contamination and presents the greatest potential for worker exposure. Personnel entering the area must wear the mandated level of protection for that area. In certain instances, different levels of protection will be required depending on the tasks and monitoring performed within that zone. The EZ for this project will be the open excavation areas with suspect contamination during installation of the SVE system, and the SVE building during the operational phase.

4.2 CONTAMINATION REDUCTION ZONE (CRZ)

The CRZ or transition zone will be established between the EZ and SZ. In this area, personnel will begin the sequential decontamination process required to exit the EZ. To prevent off-site migration of contamination and for personnel accountability, all personnel will enter and exit the EZ through the CRZ. CRZs for this project will be established adjacent to working EZ areas.

4.3 SUPPORT ZONE (SZ)

The SZ serves as a clean, control area. Operational support facilities are located within the SZ. Normal work clothing and support equipment are appropriate in this zone. Contaminated equipment, or clothing will not be allowed in the SZ. The support facilities should be located upwind of site activities. There will be a clearly marked controlled access point from the SZ into the CRZ and EZ that is monitored closely by the SSO and the SS to ensure proper safety protocols are followed. The SZ will be ?.

4.4 SITE CONTROL LOG

A log of all personnel visiting, entering or working on the site shall be maintained in the main office trailer location. The log will record the date, name, company or agency, and time entering or exiting the site.

No visitor will be allowed in the EZ without showing proof of training and medical certification, per 29 CFR 1910.120(e), (f). Visitors will supply their own boots and respiratory equipment, if required. Visitors will attend a site orientation given by the SSO and sign the HASP.

4.5 GENERAL

The following items are requirements to protect the health and safety of workers and will be discussed in the safety briefing prior to initiating work on the site:

- Eating, drinking, chewing gum or tobacco, smoking, or any practice that increases the probability of hand to mouth transfer and ingestion of contamination is prohibited in the EZ and CRZs.
- Hands and face must be washed upon leaving the EZ and before eating, drinking, chewing gum or tobacco and smoking or other activities which may result in ingestion of contamination.
- A buddy system will be used. Hand signals will be established to maintain communication.
- During site operations, each worker will consider himself as a safety backup to his partner. Off-site personnel provide emergency assistance. All personnel will be aware of dangerous situations that may develop.
- Visual contact will be maintained between buddies on site when performing hazardous duties.
- No personnel will be admitted to the site without the proper safety equipment, training, and medical surveillance certification.
- All personnel must comply with established safety procedures. Any staff member who does not comply with safety policy, as established by the SSO or the SS, will be immediately dismissed from the site.
- Proper decontamination procedures must be followed before leaving the site.
- All employees and visitors must sign in and out of the site.

5.0 PROTECTIVE EQUIPMENT

This section addresses the various levels of personal protective equipment (PPE) which are or may be required at this job site. OHM personnel and subcontractors will be trained in the use of all PPE utilized.

5.1 ANTICIPATED PROTECTION LEVELS

TASK	PROTECTION LEVEL	COMMENTS/MODIFICATIONS
Mobilization\Site Setup	Level D	Hard hat, steel-toe work boots, safety eye wear (safety glasses with side shields or goggles and face shield if splash or flying particles are likely) and hearing protection >85 dBA
Well Point\SVE Well Installation	Level D+	Hard hat, steel-toe work boots, tyvek coveralls, safety eye wear (safety glasses with side shields or goggles and face shield if splash or flying particles are likely) and hearing protection >85 dBA
Asphalt and Concrete Removal and Replacement	Level D+	Hard hat, steel-toe work boots, safety eye wear (safety glasses with side shields or goggles and face shield if splash or flying particles are likely) and hearing protection >85 dBA
General Trenching and Backfilling Operation	Level D	Hard hat, steel-toe work boots, safety eye wear (safety glasses with side shields or goggles and face shield if splash or flying particles are likely) and hearing protection >85 dBA
Exterior Piping Installation	Level D	Hard hat, steel-toe work boots, safety eye wear (safety glasses with side shields or goggles and face shield if splash or flying particles are likely) and hearing protection >85 dBA
Electrical\Mechanical\HVAC Installation	Level D	Hard hat, steel-toe work boots, safety eye wear (safety glasses with side shields or goggles and face shield if splash or flying particles are likely) and hearing protection >85 dBA
Treatment System Start-Up and Operation	Level D	Hard hat, steel-toe work boots, safety eye wear (safety glasses with side shields or goggles and face shield if splash or flying particles are likely) and hearing protection >85 dBA
Site Restoration	Level D	Hard hat, steel-toe work boots, safety eye wear (safety glasses with side shields or goggles and face shield if splash or flying particles are likely) and hearing protection >85 dBA
Equipment Decontamination	Level D+	Hard hat, steel-toe work boots, tyvek coveralls, safety eye wear (safety glasses with side shields or goggles and face shield if splash or flying particles are likely) and hearing protection >85 dBA

TASK	PROTECTION LEVEL	COMMENTS/MODIFICATIONS
General Support Zone Activities	Level D	Hard hat, steel-toe work boots, safety eye wear (safety glasses with side shields or goggles and face shield if splash or flying particles are likely) and hearing protection >85 dBA

5.2 PROTECTION LEVEL DESCRIPTIONS

This sections lists the minimum requirements for each protection level. Modification to these requirements will be noted above.

5.2.1 Level D

Level D consists of the following:

- Safety glasses with side shields
- Hard hat
- Steel-toed work boots
- Work clothing as prescribed by weather

5.2.2 Modified Level D

Modified Level D consists of the following:

- Safety glasses with side shields
- Hard hat
- Steel-toed work boots
- Nitrile, neoprene, latex or PVC overboots
- Outer nitrile, neoprene, or PVC gloves over latex sample gloves
- Face shield (when projectiles or splashes pose a hazard)
- Tyvek coverall [Polyethylene-coated Tyveks required when workers have a potential to be exposed to contaminated liquids or sludges.]

5.2.3 Level C

Level C consists of the following:

- Full-face, air-purifying respirator with appropriate cartridges
- Hooded Tyvek Coveralls [Polyethylene-coated Tyveks required when workers have a potential to be exposed to contaminated liquids or sludges].
- Hard hat
- Steel-toed work boots
- Nitrile, neoprene, latex or PVC overboots
- Nitrile, neoprene, or PVC gloves over latex sample gloves
- Face shield (when projectiles or splashes pose a hazard)

5.2.4 Level B

Level B protection consists of the items required for Level C protection with the exception that an air-supplied respirator is used in place of the air-purifying respirator.

5.3 SUPPLIED-AIR RESPIRATORS

If air monitoring shows that Level B protection is needed, OHM personnel will wear Survivair 9881-02 Hippack Airline respirators with 5-minute egress bottles or equivalents. Personnel requiring Level "B" protection and high mobility will wear Survivair Mark 2 SCBA units or equivalents.

5.4 BREATHING-AIR QUALITY

Code of Federal Regulations 29 CFR 1910.134 states breathing air will meet the requirement of the specification for Grade D breathing air as described in the ANSI/CGA Specification G-7.1-1989. OHM requires a certificate of analysis from vendors of breathing air in order to show that the air meets this standard. Breathing air will be obtained in cylinders exclusively and will be stationed in the exclusion zone (EZ).

5.5 AIR-PURIFYING RESPIRATORS

A NIOSH approved full face respirator with appropriate air purifying cartridges will be used for level C work.

5.6 RESPIRATOR CARTRIDGES

The crew members working in Level C will wear respirators equipped with air-purifying cartridges approved for the following contaminants.

- Organic vapors <1,000 ppm
- Chlorine gas <10 ppm
- Hydrogen chloride <50 ppm
- Sulfur dioxide <50 ppm
- Dusts, fumes and mists with a TWA <0.05 mg/m^3
- Asbestos-containing dusts and mists
- Radionuclides

5.7 CARTRIDGE CHANGES

All cartridges will be changed a minimum of once daily, or more frequently if personnel begin to experience increased inhalation resistance or breakthrough of a chemical warning property.

5.8 INSPECTION AND CLEANING

Respirators are checked periodically by a qualified individual and inspected before each use by the wearer. All respirators and associated equipment will be decontaminated and hygienically cleaned after each use.

5.9 FIT TESTING

Annual respirator fit tests are required of all personnel wearing negative-pressure respirators. The test will use isoamyl acetate or irritant smoke. The fit test must be for the style and size of the respirator to be used.

5.10 FACIAL HAIR

No personnel who have facial hair which interferes with the respirator's sealing surface will be permitted to wear a respirator and will not be permitted to work in areas requiring respirator use.

5.11 CORRECTIVE LENSES

Normal eyeglasses cannot be worn under full-face respirators because the temple bars interfere with the respirator's sealing surfaces. For workers requiring corrective lenses, special spectacles designed for use with respirators will be provided.

5.12 CONTACT LENSES

Contact lenses will not be worn with any type of respirator.

5.13 MEDICAL CERTIFICATION

Only workers who have been certified by a physician as being physically capable of respirator usage will be issued a respirator. Personnel unable to pass a respiratory fit test or without medical clearance for respirator use will not be permitted to enter or work in areas on site that require respiratory protection. Employees receive a written physicians opinion that they are fit for general hazardous waste operations as per 29 CFR 1910.120(f)(7).

5.14 SITE SPECIFIC PERSONAL PROTECTIVE EQUIPMENT (PPE) PROGRAM

The primary objective of the PPE program is to ensure employee protection and to prevent employee exposure to site contaminants during site operations. Engineering controls are not feasible for many tasks and, therefore, require the use of PPE.

The SS will be responsible for implementing all aspects of the PPE program. This includes donning and doffing, temperature related stress monitoring, inspection, and decontamination (see Section 6.0). PPE selection is identified in Table 5.1 for each specified task. The SS in consultation with the SSO, if assigned, Health and Safety Manager, project CIH and the ROICC will direct changes in PPE based on changing conditions. The site specific HASP will serve as written certification that the workplace was evaluated concerning PPE requirements. OHM Corporation's comprehensive PPE Program is described in Appendix D.

5.14.1 Site-Specific Respiratory Protection Program

The primary objective of respiratory protection is to prevent employee exposure to atmospheric contamination. When engineering measures to control contamination are not feasible, or while they are being implemented, personal respiratory protective devices will be used.

The criteria for determining respirator need have been evaluated based on the site contaminants; expected levels of protection are outlined in Section 5.1. Air monitoring will be conducted to confirm that respiratory protection levels are adequate (Section 7.0). All respirator users are OSHA trained in proper respirator use and maintenance. The SS and SSO will observe workers during respirator use for signs of stress.

The SS, CIH, HSM, and SSO will also evaluate this HASP periodically to determine its continued effectiveness with regard to respiratory protection. All persons assigned to use respirators will have medical clearance to do so.

6.0 DECONTAMINATION PROCEDURES

This section describes the procedures necessary to ensure that both personnel and equipment are free from contamination when they leave the work site.

6.1 PERSONNEL DECONTAMINATION

Decontamination procedures will ensure that material which workers may have contacted in the EZ does not result in personal exposure and is not spread to clean areas of the site. This sequence describes the general decontamination procedure that will be utilized during the project. The specific stages may vary depending the task, the protection level, etc.

Level D+ Decontamination

1. Go to end of EZ
2. Remove and discard latex booties
3. Remove outer gloves and discard
4. Cross into CRZ (dirty side of respirator wash area)
5. Remove outer gloves and discard
6. Remove protective suit (polycoated/regular tyvek)
7. Remove inner sample gloves and discard
8. Wash face and hands

Level C Decontamination

1. Go to end of EZ
2. a. Wash outer boots (Tingley or Robars) and stage to let dry; or
   b. Remove and discard latex booties
3. Remove outer gloves and discard
4. Remove outer suit (Saranex/polycoated/regular tyvek)
5. Remove outer sample gloves and discard
6. Cross into CRZ (dirty side of respirator wash area)
7. Remove inner suit and discard, (if applicable)
8. Remove and wash respirator (4 stages)
   a. Soap and water solution
   b. First rinse
   c. Disinfect respirator (1 cap full of bleach to 1 gallon of water)
   d. Final rinse
9. Hang respirator to dry
10. Remove inner sample gloves and discard
11. Wash face and hands

6.1.1 Suspected Contamination

Any employee suspected of sustaining skin contact with chemical materials will first use the emergency shower. Following a thorough drenching, the worker will proceed to the decontamination facility. Here the worker will remove clothing, shower, don clean clothing, and immediately be taken to the first-aid station. Medical attention will be provided at determined by the degree of injury.

6.1.2 Personal Hygiene

Before any eating, smoking, or drinking, personnel will wash hands, arms, neck and face.

6.2 EQUIPMENT DECONTAMINATION

All contaminated equipment will be decontaminated before leaving the site. Decontamination procedures may vary , but may include sweeping, wiping, scraping, hosing, or steaming the exterior of the equipment. Personnel performing this task will wear the proper PPE as prescribed by the SSO.

6.3 DISPOSAL

All decontamination liquids and disposable clothing will be treated as contaminated waste unless determined otherwise by accepted testing methods. Wastes will be disposed of according to state and federal regulations.

7.0 AIR MONITORING

Air monitoring will be conducted in order to determine airborne contamination levels. This ensures that respiratory protection is adequate to protect personnel against the chemicals that are encountered. The following air monitoring efforts will be used at this site. Additional air monitoring may be conducted at the discretion of the SSO.

The following chart describes the air monitoring required and appropriate action levels.

Monitoring Device	Action Level	Action
LEL/O_2	>10% LEL <20.8% O_2	Evacuate area, ventilate, upgrade to Level B if necessary, continue to monitor
PID (11.7 ev probe)	1-5 ppm unknowns 5-500 ppm unknowns >500 ppm unknowns	Level C Level B Level A
Colorometric Indicator Tubes - Tetrachloroethylene	<25 ppm ≥25 ppm <1000 ppm ≥1000 ppm	Level D Level C Level B
Vinyl Chloride	<1 ppm ≥1 ppm	Level D Level B

7.1 LOWER EXPLOSIVE LIMIT/OXYGEN (LEL/O_2) METER

Prior to entering a confined-space area or hot work involving welding, cutting, or other high heat-producing operations where flammable or combustible vapors may be present, LEL/O_2 measurements will be taken.

7.1.1 Type and Operational Aspects

- MSA Combustible Gas/Oxygen Meter Model 260 or equivalent
  - Principle of Operation
    - Oxygen detector uses an electrochemical sensor; produces a minute electric current proportional to the oxygen content.
    - Combustible gas indicators use a combustion chamber containing a filament that ignites flammable vapors; filament is heated or coated with a catalyst (platinum) to facilitate combustion.
    - Filament is part of a balanced resistor circuit; combustion in the chamber causes the filament temperature to increase; results in increased filament resistance.

- Change in the filament's resistance causes an imbalance in the circuit proportional to the percent of the lower explosive limit (% LEL).

- Concentrations greater than the LEL and lower than the upper explosive limit (UEL) will read 100% LEL; combustible atmosphere present.

- Concentrations greater than the UEL will read above 100% LEL then return to zero. (NOTE: Some devices have catchment mechanisms which will cause the needle to remain at 100% until the meter is reset.) This type of response indicates the gas mixture is too rich to burn and is not combustible. The danger is that the addition of air to the gas mixture could bring it into the flammable range (less than the UEL).

- Oxygen meter set at the factory to alarm at 19.5% (oxygen deficient atmosphere) combustible gas meter set by the user to alarm at 10% LEL.

7.1.2 Calibration Methods/Frequencies

Before the calibration of the combustible gas indicator can be checked, the Model 260 must be in operating condition. The Model 260 combustible gas indicator is normally calibrated on pentane as being representative of the flammability characteristics of most commonly encountered combustible gases. The meter scale is calibrated from zero to 100% LEL, which corresponds in actual volume concentrations of 0 to approximately 14% pentane in air. A booklet of response curves is supplied with the Model 260. These curves may be used to interpret meter readings when sampling combustible gases other than pentane.

It is recommended that calibration be checked before and after using each time. The SSO will record and log such calibration information into an air monitoring notebook. The O_2 meter is calibrated by adjusting the O_2 control knob to 20.8% while the meter is operated in a fresh air atmosphere.

7.1.3 Preventative Maintenance

The primary maintenance of the Model 260 is the rechargeable 2.4 volt nickel cadmium battery. Recommended charging time is 16 hours. It may be left on charge for longer periods without damaging the battery. The battery sometimes will not supply full power capacity after repeated partial use between charging. Therefore, it is recommended that the battery be exercised at least once a month by running for eight to 10 hours and recharged. If the instrument has not been used for 30 days, the battery should be charged prior to use.

7.2 PHOTOIONIZATION DETECTOR (PID)

A PID will be used to monitor total ionizable organic content of the ambient air. A PID will prove useful as a direct reading instrument to aid in determining if respiratory protection needs to be upgraded and to define the EZ. (Note: PID readings do not always indicate the actual air concentration of a compound. Consult the manual, HNU, or the CIH for clarification.)

The SSO will take measurements before operations begin in an area to determine the amount of organic compounds naturally occurring in the air. This is referred to as a background level.

Levels of volatile organic compounds will generally be measured in the air at active EZ areas where intrusive work is taking place once every hour and at the support zone once every hour when levels are detected above background in the EZ. If levels exceed background at any time in the support zone, work in the

exclusion zone will cease and corrective actions will be taken, e.g., cover soil with polyethylene sheeting. Work will not resume until levels reach background in the support zone.

7.2.1 Type and Operational Aspects

- PID Model PI 101 or equivalent
  - Principle of Operation
    - Ionization potential (IP) - The energy required to remove the outermost electron from a molecule; measured in electron volts (eV); characteristic property of a specific chemical.
    - Photoionization - Using ultraviolet (UV) light to remove the outermost electron from a molecule.
    - Energy of UV light (9.5, 10.2, or 11.7 eV) must be equal to or greater than the IP to photoionize the molecule (9.32 Ev for Perchloroethylene).
    - Fan or pump is used to draw air into the detector where the contaminants are exposed to a UV light source (lamp).
    - Ions are collected on a charged plate and produce a current directly proportional to the number of ionized molecules; current is amplified and displayed on the meter.

7.2.2 Calibration Method/Frequencies

The PID Model PI 101 is designed for trace gas analysis in ambient air and is calibrated at HNU with certified standards of benzene, vinyl chloride, and isobutylene. Other optional calibrations are available (e.g., ammonia, ethylene oxide, H_2S, etc.).

OHM will use a PID with a 11.7 eV lamp. This lamp has been determined to be most responsive to the contaminants on site. Optional probes containing lamps of 9.5 and 10.2 eV are interchangeable in use within individual read-out assemblies for different applications.

The approximate span settings for the probe that would give different readings of the amounts of trace gas of a particular species in a sample are based upon the relative photoionization sensitivities of various gases twice daily (beginning and end of shift).

It is recommended that calibration be checked twice each day (beginning and end of shift). The SSO will record and log such calibration information into an air monitoring notebook.

7.2.3 Preventative Maintenance

Maintenance of the PID Model PI 101 consists of cleaning the lamp and ion chamber, and replacement of the lamp or other component parts or sub-assemblies.

7.3 COLORIMETRIC DETECTOR TUBES

Detector tubes are useful for identifying specific air contaminants at approximate concentrations or a chemical group during field screening surveys. The SSO or his designated representative will use

Perchloroethylene and Vinyl Chloride (VC) detector tubes in conjunction with a PID to detect for the presence and concentration of Perchloroethylene.

7.3.1 Type and Operational Aspects

- Drager Multi Glass Detector Model 21/31
  - Principle of Operation
    - Colorimetric indicator tubes (detector tubes) consist of a glass tube impregnated with an indicating chemical.
    - Tube is connected to a piston or bellow pump to draw a know volume of air through the tube.
    - Contaminant reacts with the indicator chemical in the tube, producing a change in color whose length is proportional to the contaminant concentration; glass tube has degradations in ppm to match the length of stain.
    - Preconditioning filter may precede the detector tube to remove interfering contaminants (benzene, vinyl chloride).

7.3.2 Calibration Methods/Frequencies

There is no method or procedure for calibrating any colorimetric detector tube. However, it is important to read the instructions provided with a specific detector tube to determine number of pump strokes, interfering chemicals, proper color change, and shelf life. It is important that the number of strokes is not exceeded on the first measurement, as this may overload the tube and overshoot the standard range of measurement.

Sampling pump can be checked but not calibrated using the bubble tube. All bellows pumps draw in a specific amount of air during each stroke. This amount should correspond to a specific amount on the bubble tube (i.e., if one stroke equals 100 cc, then the bubble should move 100 cc in the bubble tube). Also, a leak check can be conducted by activating a pump stroke, then inserting an unopened colorimetric tube in the pump inlet. The pump should not move, if it does, this indicates a leak. If the pump fails either the leak test or the volume test, return it back to the manufacturer for repair.

7.3.3 Preventative Maintenance

Generally speaking, the reagent of the colorimetric tubes cannot be stored for unlimited periods. The shelf life of the Drager tubes are, therefore, limited to two years (for storage at room temperature).

7.4 AIR MONITORING LOG

The SSO will ensure that all air-monitoring data is logged into a monitoring notebook. Data will include instrument used, wind direction, work process, etc. The OHM Program CIH or designee will periodically review this data.

7.5 CALIBRATION REQUIREMENTS

The PID, LEL/O_2 meter and sampling pumps required with fixed-media air sampling will be calibrated daily before and after use. A separate log will be kept detailing date, time, span gas, or other standard, and name of person performing the calibration.

7.6 AIR MONITORING RESULTS

Air monitoring results will be posted for personnel inspection, and will be discussed during morning safety meetings.

8.0 EMERGENCY RESPONSE

8.1 PRE-EMERGENCY PLANNING

Prior to engaging in construction/remediation activities at the site, OHM will plan for possible emergency situations and have available adequate supplies and manpower to respond. In addition site personnel will receive training during the site orientation concerning proper emergency response procedures.

The following situations would warrant implementation of the Emergency Response and Contingency Plan (ERCP):

Fire/Explosion	• The potential for human injury exists. • Toxic fumes or vapors are released. • The fire could spread on site or off site and possibly ignite other flammable materials or cause heat-induced explosions. • The use of water and/or chemical fire suppressants could result in contaminated run-off. • An imminent danger of explosion exists.
Spill or Release of Hazardous Materials	• The spill could result in the release of flammable liquids or vapors, thus causing a fire or gas explosion hazard. • The spill could cause the release of toxic liquids or fumes in sufficient quantities or in a manner that is hazardous to or could endanger human health.
Natural Disaster	• A rain storm exceeds the flash flood level. • The facility is in a projected tornado path or a tornado has damaged facility property. • Severe wind gusts are forecasted or have occurred and have caused damage to the facility.
Medical Emergency	• Overexposure to hazardous materials. • Trauma injuries (broken bones, severe lacerations/bleeding, burns). • Eye/skin contact with hazardous materials. • Loss of consciousness. • Heat stress (Heat stroke). • Cold stress (Hypothermia). • Heart attack. • Respiratory failure. • Allergic reaction.

The following measures will be taken to assure the availability of adequate equipment and manpower resources:

- Sufficient equipment and materials will be kept on site and dedicated for emergencies only. The inventory will be replenished after each use.

- On-site emergency responders will be current in regards to training and medical surveillance programs. Copies of all applicable certificates will be kept on file for on-site personnel required to respond.

- It will be the responsibility of the emergency coordinator to brief the on-site response team on anticipated hazards at the site. The emergency coordinator shall also be responsible for anticipating and requesting equipment that will be needed for response activities.

- Emergency response activities will be coordinated with the Local Emergency Management Agency (EMA), or equivalent, in compliance with SARA Title III requirements.

Communications will be established prior to commencement of any activities at the remediation site. Communication will be established so that all responders on site have availability to all pertinent information to allow them to conduct their activities in a safe and healthful manner. The primary communication device will be two-way radios. Air horns may be used to alert personnel of emergency conditions. A telephone will be located at the command post to summon assistance in an emergency.

Primary communication with local responders in the event of an emergency will be accomplished using commercial telephone lines.

8.2 EMERGENCY RECOGNITION AND PREVENTION

Because unrecognized hazards may result in emergency incidents, it will be the responsibility of the Site Supervisor and Site Safety Officer (SSO), through daily site inspections and employee feedback (Safety Observation Program, daily safety meetings, and job safety analyses) to recognize and identify all hazards that are found at the site. These may include:

Chemical Hazards	• Materials at the site • Materials brought to the site
Physical Hazards	• Fire/explosion • Slip/trip/fall • Electrocution • Confined space • IDLH atmospheres • Excessive noise
Mechanical Hazards	• Heavy equipment • Stored energy system • Pinch points • Electrical equipment • Vehicle traffic
Environmental Hazards	• Electrical Storms • High winds • Heavy Rain/Snow • Temperature Extremes (Heat/Cold Stress) • Poisonous Plants/Animals

Once a hazard has been recognized, the Site Supervisor and/or the SSO will take immediate action to prevent the hazard from becoming an emergency. This may be accomplished by the following:

- Daily safety meeting
- Task-specific training prior to commencement of activity
- Lock-out/tag-out
- Personal Protective Equipment (PPE) selection/use

- Written and approved permits for hot work, confined space
- Trenching/shoring procedure
- Air monitoring
- Following all OHM standard operating procedures
- Practice drills for fire, medical emergency, and hazardous substances spills

TABLE 8.1
EMERGENCY TELEPHONE NUMBERS/ HOSPITAL DIRECTIONS

Local Agencies All services Fire Department Police	757-444-3333
Hospital - DePaul Medical Center *Directions:* From Hampton Blvd; follow Hampton Blvd to Taussig Blvd, turn right onto Taussig Blvd, road becomes RT 564. Follow RT 564 to Granby St exit; right onto Granby St; Hospital on Granby St right side.	757-889-5000
Regional Poison Control Center	800-552-6337
State Agencies Virginia Pollution Response	757-367-0080
Federal Agencies EPA Region Branch Response Center	215-597-9800
Agency for Toxic Substances and Disease Registry	404-639-0615 (24 HR)
Navy ROICC /RPM Ms. Marijane McCarthy (ROICC) David Forsythe (RPM)	 757-322-4467 757-322-4783
U.S. Coast Guard National Response Center	757-484-8192 800-424-8802
OHM Personnel Project Manager - Phil Tully Director, Health and Safety - Kevin McMahon Health & Safety Manger - Robert Brooks	 609-588-6348 609-588-6375 609-588-6423
OHM Corporation (24 hour)	800-537-9540
Additional Phone #'s in Section 2 this HASP	

*See Hospital Route Map (following page)

8.3 PERSONNEL ROLES, LINES OF AUTHORITY, AND COMMUNICATIONS

This section of the ERCP describes the various roles, responsibilities, and communication procedures that will be followed by personnel involved in emergency responses.

The primary emergency coordinator for this site is the Site Supervisor. In the event an emergency occurs and the emergency coordinator is not on site, the Site Safety Officer or the highest ranking employee on site will serve as the emergency coordinator until he arrives. The emergency coordinator will determine the nature of the emergency and take appropriate action as defined by this ERCP.

Insert Map to Hospital

The emergency coordinator will implement the ERCP immediately as required. The decision to implement the plan will depend upon whether the actual incident threatens human health or the environment. Immediately after being notified of an emergency incident, the emergency coordinator or his designee will evaluate the situation to determine the appropriate action.

8.3.1 Responsibilities and Duties

This section describes the responsibilities and duties assigned to the emergency coordinator.

It is recognized that the structure of the "Incident Command System" will change as additional response organizations are added. OHM will follow procedures as directed by the fire department, LEPC, State and Federal Agencies as required. OHM will defer to the local Fire Department chief to assume the role of Incident Commander upon arriving on site. Additional on-site personnel may be added to the Site Emergency Response Team as required to respond effectively.

8.3.2 On-Site Emergency Coordinator Duties

The on-site emergency coordinator is responsible for implementing and directing the emergency procedures. All emergency personnel and their communications will be coordinated through the emergency coordinator. Specific duties are as follows:

- Identify the source and character of the incident, type and quantity of any release. Assess possible hazards to human health or the environment that may result directly from the problem or its control.

- Discontinue operations in the vicinity of the incident if necessary to ensure that fires, explosions, or spills do not recur or spread to other parts of the site. While operations are dormant, monitor for leaks, pressure build-up, gas generation, or ruptures in valves, pipes, or other equipment, where appropriate.

- Notify local Emergency Response Teams if their help is necessary to control the incident. Table 8.1 provides telephone numbers for emergency assistance.

- Direct on-site personnel to control the incident until, if necessary, outside help arrives.

- Ensure that the building or area where the incident occurred and the surrounding area are evacuated and shut off possible ignition sources, if appropriate. The Emergency Response Team is responsible for directing site personnel such that they avoid the area of the incident and leave emergency control procedures unobstructed.

- If fire or explosion is involved, notify facility Fire Department.

- Notify NAVY ROICC

- Notify OHM Project Manager

- Have protected personnel, in appropriate PPE, on standby for rescue.

If the incident may threaten human health or the environment outside of the site, the emergency coordinator should immediately determine whether evacuation of area outside of the site may be necessary and, if so, notify the Police Department and the Office of Emergency Management.

When required, notify the National Response Center. The following information should be provided to the National Response Center:

- Name and telephone number
- Name and address of facility
- Time and type of incident
- Name and quantity of materials involved, if known
- Extent of injuries
- Possible hazards to human health or the environment outside of the facility.

The emergency telephone number for the National Response Center is 800-424-8802.

If hazardous waste has been released or produced through control of the incident, ensure that:

- Waste is collected and contained.

- Containers of waste are removed or isolated from the immediate site of the emergency.

- Treatment or storage of the recovered waste, contaminated soil or surface water, or any other material that results from the incident or its control is provided.

- Ensure that no waste that is incompatible with released material is treated or stored in the facility until cleanup procedures are completed.

- Ensure that all emergency equipment used is decontaminated, recharged, and fit for its intended use before operations are resumed.

- Notify the USEPA Regional Administrator that cleanup procedures have been completed and that all emergency equipment is fit for its intended use before resuming operations in the affected area of the facility. The USEPA Regional Administrator's telephone number is included in the Emergency Contacts.

- Record time, date, and details of the incident, and submit a written report to the USEPA Regional Administrator. Report is due to USEPA within 15 days of the incident.

8.4 SAFE DISTANCES AND PLACES OF REFUGE

The emergency coordinator for all activities will be the SS. No single recommendation can be made for evacuation or safe distances because of the wide variety of emergencies which could occur. Safe distances can only be determined at the time of an emergency based on a combination of site and incident-specific criteria. However, the following measures are established to serve as general guidelines.

In the event of minor hazardous materials releases (small spills of low toxicity), workers in the affected area will report initially to the contamination reduction zone. Small spills or leaks (generally less than 55 gallons) will require initial evacuation of at least 50 feet in all directions to allow for cleanup and to prevent exposure. After initial assessment of the extent of the release and potential hazards, the emergency coordinator or his designee will determine the specific boundaries for evacuation. Appropriate steps such as caution tape, rope, traffic cones, barricades, or personal monitors will be used to secure the boundaries.

In the event of a major hazardous material release (large spills of high toxicity/greater than 55 gallons), workers will be evacuated from the building/site. Workers will assemble at the entrance to the site for a head count by their foremen and to await further instruction.

If an incident may threaten the health or safety of the surrounding community, the public will be informed and, if necessary, evacuated from the area. The emergency coordinator, or his designee will inform the proper agencies in the event that this is necessary. Telephone numbers are listed in Table 8.1.

Places of refuge will be established prior to the commencement of activities. These areas must be identified for the following incidents:

- Chemical release
- Fire/explosion
- Power loss
- Medical emergency
- Hazardous weather

In general, evacuation will be made to the crew trailers, unless the emergency coordinator determines otherwise. It is the responsibility of the emergency coordinator to determine when it is necessary to evacuate personnel to off-site locations.

In the event of an emergency evacuation, all the employees will gather at the entrance to the site until a head count establishes that all are present and accounted for. No one is to leave the site without notifying the emergency coordinator.

8.5 EVACUATION ROUTES AND PROCEDURES

All emergencies require prompt and deliberate action. In the event of an emergency, it will be necessary to follow an established set of procedures. Such established procedures will be followed as closely as possible. However, in specific emergency situations, the emergency coordinator may deviate from the procedures to provide a more effective plan for bringing the situation under control. The emergency coordinator is responsible for determining which situations require site evacuation.

8.5.1 Evacuation Signals and Routes

Two-way radio communication and an air horn will be used to notify employees of the necessity to evacuate an area or building involved in a release/spill of a hazardous material. Each crew supervisor will have a two way radio. A base station will be installed in the OHM office trailer to monitor for emergencies. Total site evacuation will be initiated only by the emergency coordinator, however, in his absence, decision to preserve the health and safety of employees will take precedence. Evacuation routes will be posted in each outside work area. Signs inside buildings will be posted on walls or other structural element of a building. Periodic drills will be conducted to familiarize each employee with the proper routes and procedures.

8.5.2 Evacuation Procedures

In the event evacuation is necessary, the following actions will be taken:

- The emergency signal will be activated.

- No further entry of visitors, contractors, or trucks will be permitted. Vehicle traffic within the site will cease in order to allow safe exit of personnel and movement of emergency equipment.
- Shut off all machinery if safe to do so.
- ALL on-site personnel, visitors, and contractors in the support zone will assemble at the entrance to the site for a head count and await further instruction from the emergency coordinator.
- ALL persons in the exclusion zone and contamination reduction zone will be accounted for by their immediate crew leaders (e.g., foreman). Leaders will determine the safest exits for employees and will also choose an alternate exit if the first choice is inaccessible.
- During exit, the crew leader should try to keep the group together. Immediately upon exit, the crew leader will account for all employees in his crew.
- Upon completion of the head count, the crew leader will provide the information to the emergency coordinator.
- Contract personnel and visitors will also be accounted for.
- The names of emergency response team members involved will be reported to the emergency spill control coordinator.
- A final tally of persons will be made by the emergency coordinator or designee. No attempt to find persons not accounted for will involve endangering lives of OHM or other employees by re-entry into emergency areas.
- In all questions of accountability, immediate crew leaders will be held responsible for those persons reporting to them. Visitors will be the responsibility of those employees they are seeing. Contractors and truck drivers are the responsibility of the Site Supervisor. The security guard will aid in accounting for visitors, contractors, and truckers by reference to sign-in sheets available from the guard shack.
- Personnel will be assigned by the emergency coordinator to be available at the main gate to direct and brief emergency responders.
- Re-entry into the site will be made only after clearance is given by the emergency coordinator. At his direction, a signal or other notification will be given for re-entry into the facility.
- Drills will be held periodically to practice all of these procedures and will be treated with the same seriousness as an actual emergency.

8.6 EMERGENCY SPILL RESPONSE PROCEDURES AND EQUIPMENT

In the event of an emergency involving a hazardous material spill or release, the following general procedures will be used for rapid and safe response and control of the situation. Emergency contacts found in Table 8.1 provide a quick reference guide to follow in the event of a major spill.

8.6.1 Notification Procedures

If an employee discovers a chemical spill or process upset resulting in a vapor or material release, he or she will immediately notify the on-site emergency coordinator.

On-site Emergency Coordinator will obtain information pertaining to the following:

- The material spilled or released.
- Location of the release or spillage of hazardous material.
- An estimate of quantity released and the rate at which it is being released.
- The direction in which the spill, vapor or smoke release is heading.
- Any injuries involved.
- Fire and/or explosion or possibility of these events.
- The area and materials involved and the intensity of the fire or explosion.

This information will help the on-site emergency coordinator to assess the magnitude and potential seriousness of the spill or release.

8.6.2 Procedure for Containing/Collecting Spills

The initial response to any spill or discharge will be to protect human health and safety, and then the environment. Identification, containment, treatment, and disposal assessment will be the secondary response.

If for some reason a chemical spill is not contained within a dike or sump area, an area of isolation will be established around the spill. The size of the area will generally depend on the size of the spill and the materials involved. If the spill is large (greater than 55 gallons) and involves a tank or a pipeline rupture, an initial isolation of at least 100 ft. in all directions will be used. Small spills (less than or equal to 55 gallons) or leaks from a tank or pipe will require evacuation of at least 50 ft. in all directions to allow cleanup and repair and to prevent exposure. When any spill occurs, only those persons involved in overseeing or performing emergency operations will be allowed within the designated hazard area. If possible the area will be roped or otherwise blocked off.

If the spill results in the formation of a toxic vapor cloud (by reaction with surrounding materials or by outbreak of fire) and its release (due to high vapor pressures under ambient conditions), further evacuation will be enforced. In general an area at least 500 feet wide and 1,000 feet long will be evacuated downwind if volatile materials are spilled. (Consult the DOT Emergency Response Guide for isolation distances for listed hazardous materials.)

If an incident may threaten the health or safety of the surrounding community, the public will be informed and possibly evacuated from the area. The on-site emergency coordinator will inform the proper agencies in the event this is necessary. (Refer to Table 8.1)

As called for in regulations developed under the Comprehensive Environmental Response Compensation Liability Act of 1980 (Superfund), OHM's practice is to report a spill of a pound or more of any hazardous material for which a reportable quantity has not been established and which is listed under the Solid Waste Disposal Act, Clean Air Act, Clean Water Act, or TSCA. OHM also follows the same practice for any substances not listed in the Acts noted above but which can be classified as a hazardous waste under RCRA.

Clean up personnel will take the following measures:

- Make sure all unnecessary persons are removed from the hazard area.
- Put on protective clothing and equipment.
- If a flammable material is involved, remove all ignition sources, and use spark and explosion proof equipment for recovery of material.
- Remove all surrounding materials that could be especially reactive with materials in the waste. Determine the major components in the waste at the time of the spill.
- If wastes reach a storm sewer, try to dam the outfall by using sand, earth, sandbags, etc. If this is done, pump this material out into a temporary holding tank or drums as soon as possible.
- Place all small quantities of recovered liquid wastes (55 gallons or less) and contaminated soil into drums for incineration or removal to an approved disposal site.
- Spray the spill area with foam, if available, if volatile emissions may occur.
- Apply appropriate spill control media (e.g. clay, sand, lime, etc.) to absorb discharged liquids.
- For large spills, establish diking around leading edge of spill using booms, sand, clay or other appropriate material. If possible, use diaphragm pump to transfer discharged liquid to drums or holding tank.

8.6.3 Emergency Response Equipment

The following equipment will be staged in the support zone and throughout the site, as needed, to provide for safety and first aid during emergency responses. (Emergency eyewash equipment meets ANSI Standard;

- ABC-type fire extinguisher
- First-aid kit, industrial size
- Eyewash/safety shower
- Emergency signal horn
- Self contained breathing apparatus (two)
- Stretcher/backboard

In addition to the equipment listed above, OHM maintains direct reading instrumentation that may be used in emergency situations to assess the degree of environmental hazard. This equipment will only be used by the Site Safety Officer or other specially trained personnel. This equipment will be stored, charged and ready for immediate use in evaluating hazardous chemical concentrations. The equipment will be located at the OHM office trailer.

EQUIPMENT NAME	APPLICATION
Portable H-NU Photoionization Meter	Measures selected inorganic and organic chemical concentrations
MSA Oxygen and Combustible Gas Meter	Measures oxygen and combustible gas levels
Draeger Detector Tubes	Tubes for detection of Perchloroethylene

8.6.4 Personal Protective Equipment

A supply of two (minimum) SCBAs will be located in the support zone for use in emergency response to hazardous materials releases. They will be inspected at least monthly, according to OSHA requirements. In addition, all emergency response personnel will have respirators available for use with cartridge selection determined by the Site Safety Officer based on the results of direct reading instruments. Emergency response personnel will also be provided with protective clothing as warranted by the nature of the hazardous material and as directed by the Site Safety Officer.

8.6.5 Emergency Spill Response Clean-Up Materials and Equipment

A sufficient supply of appropriate emergency response clean-up and personal protective equipment will be inventoried and inspected, visually, on a weekly basis.

The materials listed below may be kept on site for spill control, depending on the types of hazardous materials present on site. The majority of this material will be located in the support zone, in a supply trailer or storage area. Small amounts will be placed on pallets and located in the active work areas.

- Sand or clay to solidify/absorb liquid spills.
- Lime (calcium oxide), soda ash (sodium carbonate), or baking soda (sodium bicarbonate) for neutralizing acid (pH <7) spills.
- Activated charcoal (carbon) to adsorb organic solvents (hydrocarbons) and to reduce flammable vapors.
- Citric acid for neutralizing caustic (pH >7) spills.
- Appropriate solvents, e.g., CITRIKLEEN, for decontamination of structures or equipment.

The following equipment will be kept on site and dedicated for spill cleanup:

- Plastic shovels for recovering corrosive and flammable materials.
- Sausage-shaped absorbent booms for diking liquid spills, drains, or sewers.
- Sorbent sheets (diapers) for absorbing liquid spills.
- Overpack drums for containerizing leaking drums.
- 55-gallon open-top drums for containerization of waste materials.

*NOTE: All contaminated soils, absorbent materials, solvents and other materials resulting from the clean-up of spilled or discharged substances shall be properly stored, labeled, and disposed of off-site.

8.7 EMERGENCY CONTINGENCY PLAN

This section of the ERCP details the contingency measures OHM will take to prepare for and respond to fires, explosions, spills and releases of hazardous materials, hazardous weather, and medical emergencies.

8.8 MEDICAL EMERGENCY CONTINGENCY MEASURES

The procedures listed below will be used to respond to medical emergencies. The SSO will contact the local hospital and inform them of the site hazards and potential emergency situations. A minimum of two First-Aid/CPR trained personnel will be maintained on site.

8.8.1 Response

The nearest workers will immediately assist a person who shows signs of medical distress or who is involved in an accident. The work crew supervisor will be summoned.

The work crew supervisor will immediately make radio contact with the on-site emergency coordinator to alert him of a medical emergency situation. The supervisor will advise the following information:

- Location of the victim at the work site
- Nature of the emergency
- Whether the victim is conscious
- Specific conditions contributing to the emergency, if known

The Emergency Coordinator will notify the Site Safety Officer. The following actions will then be taken depending on the severity of the incident:

- Life-Threatening Incident — If an apparent life-threatening condition exists, the crew supervisor will inform the emergency coordinator by radio, and the local Emergency Response Services (EMS) will be immediately called. An on-site person will be appointed who will meet the EMS and have him/her quickly taken to the victim. Any injury within the EZ will be evacuated by OHM personnel to a clean area for treatment by (EMS) personnel. No one will be able to enter the EZ without showing proof of training, medical surveillance and site orientation.

- Non Life-Threatening Incident — If it is determined that no threat to life is present, the Site Safety Officer will direct the injured person through decontamination procedures (see below) appropriate to the nature of the illness or accident. Appropriate first aid or medical attention will then be administered.

*NOTE: The area surrounding an accident site must not be disturbed until the scene has been cleared by the Site Safety Officer.

Any personnel requiring emergency medical attention will be evacuated from exclusion and contamination reduction zones if doing so would not endanger the life of the injured person or otherwise aggravate the injury. Personnel will not enter the area to attempt a rescue if their own lives would be threatened. The decision whether or not to decontaminate a victim prior to evacuation is based on the type and severity of the illness or injury and the nature of the contaminant. For some emergency victims, immediate decontamination may be an essential part of life-saving first aid. For others, decontamination may aggravate the injury or delay life-saving first aid. Decontamination will be performed if it does not interfere with essential treatment.

If decontamination can be performed, observe the following procedures:

- Wash external clothing and cut it away.

If decontamination cannot be performed, observe the following procedures:

- Wrap the victim in blankets or plastic to reduce contamination of other personnel.
- Alert emergency and off-site medical personnel to potential contamination, instruct them about specific decontamination procedures.
- Send site personnel familiar with the incident and chemical safety information, e.g. MSDS, with the affected person.

All injuries, no matter how small, will be reported to the SSO or the Site Supervisor. An accident/injury/illness report will be completely and properly filled out and submitted to the Regional Health and Safety Director/Project CIH, in accordance with OHM's reporting procedures.

A list of emergency telephone numbers is given in Table 8.1.

8.8.2 Notification

The following personnel/agencies will be notified in the event of a medical emergency:

- Local Fire Department or EMS
- On-site Emergency Coordinator
- Workers in the affected areas
- Client Representative

8.9 FIRE CONTINGENCY MEASURES

OHM personnel and subcontractors are not trained professional firefighters. Therefore, if there is any doubt that a fire can be quickly contained and extinguished, personnel will notify the emergency coordinator by radio and vacate the structure or area. The emergency coordinator will immediately notify the local Fire Department.

The following procedures will be used to prevent the possibility of fires and resulting injuries:

- Sources of ignition will be kept away from where flammable materials are handled or stored.
- The air will be monitored for explosivity before and during hot work and periodically where flammable materials are present. Hot work permits will be required for all such work.
- "No smoking" signs will be conspicuously posted in areas where flammable materials are present.
- Fire extinguishers will be placed in all areas where a fire hazard may exist.
- Before workers begin operations in an area the foreman will give instruction on egress procedures and assembly points. Egress routes will be posted in work areas and exit points clearly marked.

8.9.1 Response

The following procedures will be used in the event of a fire:

- Anyone who sees a fire will notify their supervisor who will then contact the Emergency Coordinator by radio. The emergency coordinator will activate the emergency air horns and contact the local Fire Department.
- When the emergency siren sounds, workers will disconnect electrical equipment in use (if possible) and proceed to the nearest fire exit.
- Work crews will be comprised of pairs of workers (buddy system) who join each other immediately after hearing the fire alarm and remain together throughout the emergency. Workers will assemble at a predetermined rally point for a head count.
- When a small fire has been extinguished by a worker, the emergency coordinator will be notified.

8.10 HAZARDOUS WEATHER CONTINGENCY MEASURES

Operations will not be started or continued when the following hazardous weather conditions are present:

- Lightning
- Heavy Rains/Snow
- High Winds

8.10.1 Response

- Excavation/soil stock piles will be covered with plastic liner.
- All equipment will be shut down and secured to prevent damage.
- Personnel will be moved to safe refuge, initially crew trailers. The emergency coordinator will determine when it is necessary to evacuate personnel to off-site locations and will coordinate efforts with fire, police and other agencies.

8.10.2 Notification

The emergency coordinator will be responsible for assessing hazardous weather conditions and notifying personnel of specific contingency measures. Notifications will include:

- OHM employees and subcontractors
- ROICC Representative
- Local Emergency Management Agency

8.11 SPILL/RELEASE CONTINGENCY MEASURES

In the event of release or spill of a hazardous material the following measures will be taken:

8.11.1 Response

Any person observing a spill or release will act to remove and/or protect injured/contaminated persons from any life-threatening situation. First aid and/or decontamination procedures will be implemented as appropriate.

First aid will be administered to injured/contaminated personnel. Unsuspecting persons/vehicles will be warned of the hazard. All personnel will act to prevent any unsuspecting persons from coming in contact with spilled materials by alerting other nearby persons. Attempt to stop the spill at the source, if possible. Without taking unnecessary risks, personnel will attempt to stop the spill at the source. This may involve activities such as uprighting a drum, closing a valve or temporarily sealing a hole with a plug.

Utilizing radio communications, the emergency coordinator will be notified of the spill/release, including information on material spilled, quantity, personnel injuries and immediate life threatening hazards. Air monitoring will be implemented by the emergency coordinator and SSO to determine the potential impact on the surrounding community. Notification procedures will be followed to inform on-site personnel and off-site agencies. The emergency coordinator will make a rapid assessment of the spill/release and direct confinement, containment and control measures. Depending upon the nature of the spill, measures may include:

- Construction of a temporary containment berm utilizing on-site clay absorbent earth
- Digging a sump, installing a polyethylene liner and
- Diverting the spill material into the sump placing drums under the leak to collect the spilling material before it flows over the ground
- Transferring the material from its original container to another container

The emergency coordinator will notify the NAVY ROICC of the spill and steps taken to institute clean-up. Emergency response personnel will clean-up all spills following the spill clean-up plan developed by the emergency coordinator. Supplies necessary to clean up a spill will be immediately available on-site. Such items may include, but are not limited to:

- Shovel, rake
- Clay absorbent
- Polyethylene liner
- Personal safety equipment
- Steel drums
- Pumps and miscellaneous hand tools

The major supply of material and equipment will be located in the Support Zone. Smaller supplies will kept at active work locations. The emergency coordinator will inspect the spill site to determine that the spill has been cleaned up to the satisfaction of the ROICC. If necessary, soil, water or air samples may be taken and analyzed to demonstrate the effectiveness of the spill clean-up effort. The emergency coordinator will determine the cause of the spill and determine remedial steps to ensure that recurrence is prevented. The emergency coordinator will review the cause with the ROICC and obtain his concurrence with the remedial action plan.

9.0 TRAINING REQUIREMENTS

As a requirement for work at this site, in any hazardous waste work area, all field personnel will be required to take a 40-hour training class. This training must cover the requirements in 29 CFR 1910.120: personal protective equipment, toxicological effects of various chemicals, hazard communication, bloodborne pathogens, handling of unknown tanks and drums, confined-space entry procedures, electrical safety, etc. In addition, all personnel must receive annual 8-hour refresher training and three day on-site training under a trained, experienced supervisor. Supervisory personnel shall have received an additional 8-hour training in handling hazardous waste operations.

All personnel entering the exclusion zone will be trained in the provisions of this site safety plan and be required to sign the Site Safety Plan Acknowledgment in Appendix A.

Site-specific training for the QADSY Site, which will include potential site contaminants, Hazard Communication as per 29 CFR 1910.1200, site physical and environmental hazards, emergency response and evacuation procedures, and emergency telephone numbers will be held at the site location by the SS and/or SSO before any site work activities begin.

9.1 SITE ORIENTATION

OHM/SUBCONTRACTORS

a. HASP sign off
b. Sign in/out procedures
c. Site background
d. Chain of command
e. Rules and regulations
f. Hours of work
g. Absences
h. Equipment
I. Emergency Information
   - Emergency signal
   - Gathering point
   - Responsibilities/roles
   - Emergency phone numbers
j. Contaminants and Material Safety Data Sheets (MSDS) [Hazard Communication Program]
k. JSAs (Phase Safety Plans)
l. Forms, site-specific

VISITOR ORIENTATION

a. Sign in/out procedures
b. Observation platform safety
c. Review of Site map
d. Work Zones in progress
e. Hazard Communication
f. Emergency plan/signals
g. Training/medical requirements
h. Zones/areas open to visitors

10.0 MEDICAL SURVEILLANCE PROGRAM

All OHM personnel participate in a medical and health monitoring program. This program is initiated when the employee starts work with a complete physical and medical history and is continued on a regular basis. A listing of OHM's worker medical profile is shown below. This program was developed in conjunction with a consultant toxicologist and OHM's occupational health physician. Other medical consultants are retained when additional expertise is required.

The medical surveillance program meets the requirements of the OSHA Standard 29 CFR 1910.120 (f).

TABLE 10.1
WORKER MEDICAL PROFILE

Item	Initial	Annual
Medical History	X	X
Work History	X	X
Visual Acuity and Tonometry	X	X
Pulmonary Function Tests	X	X
Physical Examination	X	X
Audiometry Tests	X	X
Chest X-Ray	X	X
Complete Blood Counts	X	X
Blood Chem. (SSAC-23 or equivalent)	X	X
Urinalysis	X	X
Dermatology Examination	X	X
Electrocardiogram/Stress Test	X	X (based on age)

Specific Tests (as required): (PCB blood or fat, urine mercury, urine arsenic, urine phenol, urine halomethanes, blood cyanide, cholinesterase-pseudo-cholesterase, nerve conduction velocity tests, blood lead, urine lead.)

10.1 EXAMINATION SCHEDULE

Employees are examined initially upon start of employment, annually thereafter, and may be examined upon termination of employment. Unscheduled medical examinations are conducted:

- At employee request after known or suspected exposure to toxic or hazardous materials
- At the discretion of the client, the CIH, SSO, or OHM occupational physician after known or suspected exposure to toxic or hazardous materials
- At the discretion of the OHM occupational physician

All nonscheduled medical examinations will include, as a minimum, all items specified above for periodic surveillance examination, with the exception of the chest X-ray, which will be conducted at the discretion of the occupational physician performing the examination.

APPENDIX A
HEALTH AND SAFETY PLAN CERTIFICATION

HEALTH-AND-SAFETY PLAN CERTIFICATION

By signing this document, I am stating that I have read and understand the site health-and-safety plan for OHM Remediation Services Corp. personnel and visitors entering the Q Area Drum Storage site.

REPRESENTING	*NAME (PRINT)*	*SIGNATURE*	*DATE*

APPENDIX B
OHM HAZARD COMMUNICATION PROGRAM

APPENDIX B
OHM HAZARD COMMUNICATION PROGRAM

1. OBJECTIVE

A Site Specific Hazard Communication (Employee Right-To-Know) Program will be instituted at the Q Area Drum Storage Yard, Norfolk Naval Base, Norfolk, Virginia.

2. PURPOSE

The purpose of Hazard Communication (Employee Right-to-Know) is to ensure that the hazards of all chemicals located at field project sites, shops, and facilities are transmitted (communicated), according to 29 CFR 1910.1200 and 29 CFR 1926.59 to all OHM personnel and OHM subcontractors.

3. GENERAL REQUIREMENTS

3.1 It is the responsibility of site supervisors, shop supervisors, and facilities managers to ensure that the Hazard Communication Program for the area under their supervision is updated as necessary.

3.2 Container Labeling — OHM personnel will ensure that all drums and containers are labeled according to contents. These drums and containers will include those from manufacturers and those produced by on site operations. All incoming and outgoing labels shall be checked for identity, hazard warning, and name and address of responsible party.

3.3 Material Safety Data Sheets (MSDSs) — There will be an MSDS located on site for each hazardous chemical known to exist or which is being used on site. All MSDSs will be located in the site health and safety plan which can be found in the office trailer. MSDS's for products in use may be stored in a separate binder.

3.4 Employee Information and Site Specific Training — Training employees on chemical hazards is accomplished through an ongoing corporate and regional training program. Additionally, chemical hazards will be communicated to employees through daily safety meetings held at the project and by an initial site orientation program.

3.5 OHM employees will be instructed on the following:

- Chemicals and their hazards in the work area
- How to prevent exposure to these hazardous chemicals
- What the company has done to prevent workers' exposure to these chemicals
- Procedures to follow if they are exposed to these chemicals
- How to read and interpret labels and MSDSs for hazardous substances
- Emergency spill procedures
- Proper storage and labeling

3.6 Before any new hazardous chemical is introduced on site, each employee will be given information in the same manner as during the initial safety class. The site supervisor will be responsible for seeing that the MSDS on the new chemical is available. During the mandatory morning safety briefing, information on each new chemical will be presented.

Should any new chemical be brought on site, the appropriate MSDSs will be added and reviewed with the employees.

1. GENERAL

The following written Hazard Communication Program has been established for OHM Remediation Services Corp. (OHM). The purpose of this program is to transmit information to the workers about the chemical hazards in the work place using various media. The transmittal of information will be accomplished by means of a comprehensive Hazard Communication Program, which will include container labeling and other forms of warning, material safety data sheets (MSDSs), and employee training in accordance with 29 CFR 1910.1200 and 29 CFR 1926.59.

Upon mobilization at the job site the Hazard Communication Program will be reviewed with all employees. Upon reading the Hazard Communication Program employees will be asked to sign the "Worker Hazard Communication Acknowledgment Form". The Hazard Communication Program will also be reviewed with new employees and visitors as they arrive on site. These persons will also be asked to sign the acknowledgment form. The Hazard Communication Program shall be available for review by anyone on site any time during normal work hours. OHM will accomplish the hazard communication requirements through formal safety training, departmental safety meetings, and job-site safety meetings.

The Health and Safety Department shall update the Hazard Communication Program when personnel responsibilities change, a new non-routine task is introduced, or an extremely hazardous material needs particular attention. This new program will then be distributed throughout the company.

2. RESPONSIBILITIES

Overall responsibility for compliance with the Site Specific Hazard Communication Program rests with the site supervisor. A brief outline of responsibilities for those persons directly involved with the program will follow. These responsibilities are not all inclusive, but are designed to give guidance in initial and long-term program development. Since each area is different, these responsibilities may vary.

This program is intended to cover those employees who are directly involved with the handling of hazardous chemicals or supervision of activities that involve the use of hazardous chemicals.

2.1 Health and Safety Department Responsibilities

- Review operations with site supervisors to determine what tasks require hazard communication training.
- Advise supervisory people as to which materials may need to be considered hazardous initially and eventually to ensure that hazard task determination is being done according to the written policy.
- Follow up through safety meetings and safety audits to ensure that supervisors are carrying out prescribed company policy.
- Notify supervisors immediately of any operating changes affecting the hazardous chemicals being used.

2.2 Training Department Responsibilities

- Ensure that up-to-date records are maintained on training of all employees required to handle hazardous chemicals. The supervisor should keep copies of these records and should also send copies of the initial training to the corporate training secretary for the training file.
- Educate personnel upon initial 40-hour OSHA training to the requirements of the Hazard Communication Standard.

2.3 Site Supervisors' Responsibilities

- Identify jobs requiring the use of hazardous chemicals and develop a list of those jobs and chemicals.
- Provide the training required by the Hazard Communication Standard and document training of employees in the safe handling of hazardous chemicals.
- Ensure inspection of engineering controls and personal protective equipment before each use. The health and safety department shall help determine a suitable inspection plan for each application as needed.
- Make daily surveys of the work area to ensure that safe practices are being followed. Advise employees of and document unsafe work practices on the first occasion and consider further unsafe work practices as disciplinary violations. Use documentation as topics of safety meetings.
- Ensure required labeling practices are being followed. Labels should be affixed to the container when it arrives. If the contents are transferred to another container, then all label information (manufacturer, manufacturer's telephone number, product name, target organ(s) and product number) must also be affixed to the new container, so that all containers of the material, regardless of size, are labeled. Contact the health and safety department for proper labels.
- Enforce all applicable safety and health standards through periodic documented audits.
- Before ordering a material, determine if a MSDS exists on file. Request a MSDS from the manufacturer for all new products.

2.4 Employee Responsibilities

- Read and understand entire Site Specific Hazard Communication Program.
- Obey established safety rules and regulations.
- Use all safety procedures and personal protective equipment as required by company procedures.
- Notify supervisor of the following:
  - Any symptoms or unusual effects that may be related to the use of hazardous chemicals.
  - Any missing, incomplete, or unreadable labels on containers.
  - Missing, damaged, or malfunctioning safety equipment.
- Use approved labels on containers; do not remove labels (labels are available from the health and safety department).
- Use only approved containers for hazardous chemicals. (Is chemical and container compatible and appropriate?)
- Know where emergency equipment and first-aid supplies are located.
- Know location of MSDSs. These will be located in the break/decon area and the job-site office trailer.
- Know what you are expected to do in case of an emergency. Before the commencement of any task, emergency considerations shall be made.

2.5 Shipping/Receiving Personnel Responsibilities

- The Project Accountant (PA) or other persons assigned by the site supervisor shall ensure MSDSs are received with initial shipment of a hazardous chemical; if not, contact purchasing to request the appropriate MSDS and also call the health and safety department to determine if there is a MSDS available until the requested MSDS arrives.
- Ensure labels with required information are affixed to all containers.
- Store hazardous materials in designated locations.
- Use proper personal protective equipment when handling hazardous chemicals.
- Report damaged containers or spills to the site supervisor and the site safety officer immediately.

3. HAZARD DETERMINATION

OHM will rely on MSDSs from chemical suppliers and manufacturers to meet hazard determination requirements. Other relevant data from laboratory analyses, chemical reference materials, and chemical manufacturers' written evaluation procedures will be utilized when warranted. No other method shall be used to determine a chemicals' hazards unless approved by the health and safety department.

4. LABELING

The site supervisor will be responsible for seeing that all containers arriving at OHM job sites are properly and clearly labeled. Site supervisors shall also check all labels for chemical identity and appropriate hazard warnings. If the hazardous chemical is regulated by OSHA in a substance specific health standard (29 CFR 1910), the site supervisor shall ensure that the labels or other forms of warning used are in accordance with the requirements of that standard. Any container that is not labeled shall be immediately labeled after initial discovery with the required information.

The site supervisor or Team Leader shall be responsible for seeing that all portable containers used in their work area are properly labeled with chemical identity and hazard warning. (Refer to MSDS for required labeling information.)

The site supervisor or Team Leader shall also ensure that labels on hazardous chemical containers are not removed or defaced unless the container is immediately marked with the required information and that all labels are legible in English and prominently displayed on the container or readily available in the work area throughout each shift.

If any container is found and the contents cannot be identified, the site supervisor shall be contacted immediately. When proper identification is made, a label shall be affixed to the container immediately. If it is discovered that no MSDS is available, the manufacturer and the health and safety department shall be contacted to assist in locating the proper MSDS. If there is no means of identifying the material in the container, the container shall be taken out of service, away from all personnel until it can be tested by the health and safety department or laboratory personnel. The site supervisor shall communicate their findings or awareness of such containers to all personnel working in the area and to the district health and safety manager.

5. MATERIAL SAFETY DATA SHEETS (MSDS)

The site supervisor at the job site will be responsible for maintaining a current MSDS relevant to the hazardous chemicals used on their job sites. The health and safety department will be responsible for compiling the initial MSDS file for the job site and aiding all job sites with the completion and maintenance of their respective MSDS files.

All MSDSs shall be readily available for review by all employees during each work shift. Each job site will designate a clearly marked "Employee Right-to-Know" station where employees can immediately obtain a MSDS and the required information in an emergency. MSDSs shall also be made available, upon request, to designated OHM representatives, other employer's employees, and to any OSHA inspector in accordance with the requirements of 29 CFR 1910.1200(e).

Although manufacturers are required to provide employers with MSDSs on an initial chemical shipment, OHM purchasing agents (and site supervisors purchasing their own material) shall request MSDSs and updates to MSDSs on all purchase orders. Site supervisors that are without proper MSDSs shall be responsible for requesting this information from chemical manufacturers. The site supervisor shall maintain a file of follow-up letters for all hazardous chemical shipments they receive without MSDSs.

6. EMPLOYEE INFORMATION AND TRAINING

It is the responsibility of the supervisor in charge of each employee to ensure that the employee is properly trained. Training employees on chemical hazards and chemical handling is accomplished at the time of initial employment at OHM, whenever a new chemical (or physical) hazard is introduced into the work area, and through ongoing formal and informal training programs. Additionally, chemical hazards are communicated to employees through weekly and morning, job- site safety meetings, which shall be documented according to topic, major points discussed, and names of those attending (attendance is mandatory). Records of all formal training conducted at OHM are coordinated and maintained by the Training Department secretary.

At a minimum, OHM will inform employees on the following:

- The requirements of 29 CFR 1910.1200--Hazard Communication--Evaluating the potential hazards of chemicals and communicating information concerning hazards and appropriate protective measures to employees. OHM shall accomplish employee training in several different ways including, but not limited, to 40-hour OSHA Hazardous Waste Worker Training (29 CFR 1910.120), shop safety meetings, job-site safety meetings, Health and Safety Department safety meetings, and formal and informal training about specific chemical hazards.

- The location and availability of the written Hazard Communication Program, list of hazardous chemicals, and MSDSs will be periodically posted on the employee bulletin boards providing the location of the above material.

- Any operations in their work area where hazardous chemicals are present.

- How to work safety with chemicals present in the workplace and minimize potential exposure.

Employee training shall include the following:

- Methods and observations that may be used to detect the presence or release of a hazardous chemical in the work area (monitoring instruments, visual appearance or odor, and acute and chronic health effects).

- The physical, chemical, and health hazards of the chemicals in the work area.

- The methods of preventing exposure to hazardous chemicals including the measures OHM has taken to protect the employees.

- Procedures to follow if OHM employees are exposed to hazardous chemicals (location of the nearest phone, emergency eyewash, and shower will be included). These discussions shall include proper operating procedures for all emergency equipment.

- The details of the OHM written Hazard Communication Program, including an explanation of the labeling system and the MSDSs, and how employees can obtain and use the appropriate hazard information.

- Procedures for workers involved in non-routine tasks.

Each site supervisor shall ensure that the above training is emphasized to OHM employees. The health and safety department will ensure that each job site is properly informing and training all employees through group meetings and individual discussions. Whenever a new hazardous chemical is placed into use, the site supervisor shall inform the employees of the hazards said chemical may pose. The site supervisor shall also be responsible for obtaining and making available a MSDS for the new chemical.

7. HAZARDOUS NON-ROUTINE TASKS

Occasionally, employees at OHM are required to perform tasks which are considered to be non-routine. All tasks OHM considers non-routine shall be carefully discussed among the supervisor and those performing the task. This safety briefing shall include all possible hazards an employee may encounter while completing the task, including:

- Hazard recognition
- Chemicals involved and their hazardous properties
- Physical hazards
- Methods of avoiding hazards (monitoring instruments, proper personal protective equipment, etc.)

The following is a list of some of the non-routine tasks which may occur at OHM job sites. These tasks are all covered in detail in various OHM standard operating Procedures.

7.1 Confined Space Entry
7.2 Excavation, Trenching, and Shoring
7.3 Decontamination of Equipment
7.4 Laboratory Spills
7.5 High-Pressure Washer (Laser) Operation
7.6 Line Entry Procedure
7.7 Hot Work

8. INFORMING CONTRACTORS

It shall be the responsibility of the OHM site supervisor/SSO to provide subcontractors with the following information:

- Hazardous chemicals to which they may be exposed while performing a task including the following:
  - Chemical properties
  - Physical properties
  - Acute/Chronic health effects
- Location of "Employee Right-to Know" station which includes the following:
  - MSDS for work area
  - Hazard Communication Program
  - Other relevant safety material such as Project Health and Safety Plan (HASP)
- Precautionary measures to be taken to protect employees from chemical and physical hazards.
- Location of nearest emergency equipment (fire extinguisher, eyewash, shower, phone, first-aid kit, etc.)
- Procedures to follow in the event of employee exposure.
- Steps OHM has taken to reduce the risk of exposure to physical and chemical hazards including the following:

- Safety meetings
- Hazard Communication Program
- Proper storage and labeling of hazardous chemicals
- Health and safety department shop audits

- The methods used to label all hazardous chemicals.

- Emergency evacuation signals and evacuation rally locations.

The health and safety department shall offer assistance in providing the above information to subcontractors working at OHM job sites. On initial visit by a subcontractor to OHM job sites, a "Contractor Right-to-Know" release form shall be completed. This form will state that the above information has been communicated to the perspective contractor.

Conversely, the site supervisor shall obtain the above information from subcontractors for hazardous materials they have brought to our projects.

8.1 Contractor Right-to-Know Acknowledgment

By signing this sheet, the signee is stating that an OHM employee or representative has briefed said signee on the essentials of OHM's Hazard Communication Program, including hazardous chemical(s) to which one may be exposed, location of program and MSDS, precautionary measures taken to protect contractors from chemical and physical hazards, location of nearest emergency equipment, procedures to follow in the event of employer's employee chemical exposure, and method used to label all hazardous chemicals.

Name	Date	Company

9. LIST OF HAZARDOUS CHEMICALS

The following is a list of hazardous chemicals used on this OHM job site. Further information on each hazardous chemical listed below can be found in the MSDS which are included in the site specific health and safety plan.

- Typical OHM Job-Site Hazardous Chemical Inventory List

Available On Site	Chemicals
_____	Acetone
_____	Acetylene
_____	Activated Charcoal, Powder
_____	Alum (Aluminum Sulfate)
_____	Anti-fog Bausch & Lomb
_____	Argon/Methan (95%/5%)
_____	Brake Fluid

_____ Calcium Hydroxide (Hydrated Lime)
_____ Calibration Check Gas
_____ Carbon
_____ Caustic Soda (Sodium Hydroxide)
_____ Citrikleen
_____ Coal Fly Ash
_____ Compressed Air
_____ Diatomaceous Earth
_____ Diesel Fuel
_____ Dry Ice (Solid Carbon Dioxide)
_____ Ethylene Glycol
_____ Ferric Chloride
_____ Freon
_____ Gear Grease - Delta
_____ Helium
_____ Hexane
_____ Hydraulic Fluid
_____ Hydrochloric Acid
_____ Hydrogen
_____ Isobutylene
_____ Kiln Dust
_____ Methanol
_____ Nitrogen
_____ Nitrous Oxide
_____ Oxygen
_____ Penetone
_____ Pentane
_____ Polymers (Flocculants)
_____ Premium Unleaded Gasoline
_____ PVC Solvent Cleaner
_____ PVC Cement
_____ Regular Leaded Gasoline
_____ Starting Fluid
_____ Stoddard Solvent
_____ Sulfuric Acid
_____ 10W-40 Motor Oil - Shell
_____ Tube Grease - Kendall
_____ TU Type 555 Thread Sealing Compound
_____ 2-Cycle Oil - Wolf's Head

- Site-Specific Hazardous Chemical Inventory

_____

_____

_____

_____

_____

_____

_____

APPENDIX C
MATERIAL SAFETY DATA SHEETS

FISHER SCIENTIFIC CHEMICAL DIV -- ACETONE - ACETONE, REAGENT
MATERIAL SAFETY DATA SHEET
FSC: 6810
NIIN: 014120075
Manufacturer's CAGE: 1B464
Part No. Indicator: B
Part Number/Trade Name: ACETONE

==========

General Information

==========

Item Name: ACETONE, REAGENT
Company's Name: FISHER SCIENTIFIC CO CHEMICAL DIV.
Company's Street: 1 REAGENT LANE
Company's City: FAIR LAWN
Company's State: NJ
Company's Country: US
Company's Zip Code: 07410
Company's Emerg Ph #: 201-796-7100 OR 201-796-7523
Company's Info Ph #: 201-796-7100
Safety Data Action Code: A
Record No. For Safety Entry: 001
Tot Safety Entries This Stk#: 001
Status: SE
Date MSDS Prepared: 02DEC94
Safety Data Review Date: 26OCT95
Supply Item Manager: CX
MSDS Serial Number: BXWHG
Hazard Characteristic Code: F2
Unit Of Issue: BX
Unit Of Issue Container Qty: 4 LITER
Type Of Container: BOTTLE
Net Unit Weight: 6.4 LBS

==========

Ingredients/Identity Information

==========

Proprietary: NO
Ingredient: ACETONE (SARA III)
Ingredient Sequence Number: 01
Percent: 100
Ingredient Action Code: A
NIOSH (RTECS) Number: AL3150000
CAS Number: 67-64-1
OSHA PEL: 1000PPM
ACGIH TLV: 750PPM/1000STEL;9293
Other Recommended Limit: NONE RECOMMENDED

==========

Physical/Chemical Characteristics

==========

Appearance And Odor: CLEAR, COLORLESS, VOLATILE LIQUID WITH A CHARACTERISTIC SWEETISH ODOR
Boiling Point: 133F,56C
Melting Point: -139F,-95C
Vapor Pressure (MM Hg/70 F): 180
Vapor Density (Air=1): 2.0
Specific Gravity: 0.7899
Decomposition Temperature: UNKNOWN
Evaporation Rate And Ref: 6 (BUTYL ACETATE = 1)
Solubility In Water: VERY SOLUBLE
Percent Volatiles By Volume: 100 %
Viscosity: UNKNOWN
Corrosion Rate (IPY): UNKNOWN
Autoignition Temperature: 869F

==========

Fire and Explosion Hazard Data

==========

Flash Point: -4F,-20C
Flash Point Method: CC
Lower Explosive Limit: 2.5 %
Upper Explosive Limit: 13 %
Extinguishing Media: WATER SPRAY, DRY CHEMICAL, CARBON DIOXIDE, ALCOHOL-RESISTANT FOAM

Special Fire Fighting Proc: MOVE CONTAINER FROM FIRE AREA IF CAN DO SO. APPLY COOLING WATER TO SIDES OF CONTAINERS THAT ARE EXPOSED TO FLAMES. STAY AWAY FROM ENDS OF TANKS.
Unusual Fire And Expl Hazrds: VAPORS ARE HEAVIER THAN AIR AND MAY TRAVEL A CONSIDERABLE DISTANCE TO A SOURCE OF IGNITION AND FLASH BACK.

==========

Reactivity Data

==========

Stability: YES
Cond To Avoid (Stability): HEAT, OPEN FLAME
Materials To Avoid: STRONG OXIDIZING AGENTS, ACIDS, AMINES, BROMINE, NITRIC ACID

==========

Health Hazard Data

==========

==========

Precautions for Safe Handling and Use

==========

==========

Control Measures

==========

==========

Transportation Data

==========

Transportation Action Code: A
Trans Data Review Date: 95299
DOT PSN Code: ABF
DOT Proper Shipping Name: ACETONE
DOT Class: 3
DOT ID Number: UN1090
DOT Pack Group: II
DOT Label: FLAMMABLE LIQUID
IMO PSN Code: ADF
IMO Proper Shipping Name: ACETONE
IMO Regulations Page Number: 3102
IMO UN Number: 1090
IMO UN Class: 3.1
IMO Subsidiary Risk Label: -
IATA PSN Code: ACM
IATA UN ID Number: 1090
IATA Proper Shipping Name: ACETONE
IATA UN Class: 3
IATA Label: FLAMMABLE LIQUID
AFI PSN Code: ACM
AFI Prop. Shipping Name: ACETONE
AFI Class: 3
AFI ID Number: UN1090
AFI Pack Group: II
AFI Label: FLAMMABLE LIQUID
AFI Basic Pac Ref: A7.3

==========

Disposal Data

==========

==========

Label Data

==========

Label Required: YES *
Label Status: G *
Common Name: ACETONE *
Label Name: FISHER SCIENTIFIC CO CHEMICAL DIV. *
Label Street: 1 REAGENT LANE *
Label City: FAIR LAWN *
Label State: NJ *
Label Zip Code: 07410 *
Label Country: US *
Label Emergency Number: 201-796-7100 OR 201-796-7523 *

==========

URL for this msds http://hazard.com. If you wish to change, add to, or delete information in this archive please sent updates to dan@hazard.com.

CHEM SERVICE -- 0-659 CIS 1,2-DICHLOROETHENE - LABORATORY STANDARD
MATERIAL SAFETY DATA SHEET
FSC: 6550
NIIN: 00F037480
Manufacturer's CAGE: 8Y898
Part No. Indicator: A
Part Number/Trade Name: 0-659 CIS 1,2-DICHLOROETHENE

General Information

Item Name: LABORATORY STANDARD
Company's Name: CHEM SERVICE INC
Company's Street: 660 TOWER LN
Company's P. O. Box: 3108
Company's City: WEST CHESTER
Company's State: PA
Company's Country: US
Company's Zip Code: 19381-3108
Company's Emerg Ph #: 215-692-3026/800-452-9994
Company's Info Ph #: 215-692-3026/800-452-9994
Record No. For Safety Entry: 001
Tot Safety Entries This Stk#: 001
Status: SE
Date MSDS Prepared: 02JUN92
Safety Data Review Date: 06DEC94
Preparer's Company: CHEM SERVICE INC
Preparer's St Or P. O. Box: 660 TOWER LN
Preparer's City: WEST CHESTER
Preparer's State: PA
Preparer's Zip Code: 19381-3108
MSDS Serial Number: BWJDT

Ingredients/Identity Information

Proprietary: NO
Ingredient: DICHLOROETHENE
Ingredient Sequence Number: 01
NIOSH (RTECS) Number: KV9420000
CAS Number: 156-59-2

Physical/Chemical Characteristics

Appearance And Odor: COLORLESS LIQUID
Boiling Point: 140F
Melting Point: -112F
Solubility In Water: INSOLUBLE

Fire and Explosion Hazard Data

Flash Point: 42.8F
Extinguishing Media: CO2, DRY CHEMICAL POWDER/SPRAY.
Unusual Fire And Expl Hazrds: FLAMMABLE CHEMICAL. VAPORS MAY TRAVEL CONSIDERABLE DISTANCE TO IGNITION SOURCE & FLASH BACK. DECOMPOSITION PRODUCTS ARE CORROSIVE.

Reactivity Data

Stability: YES
Cond To Avoid (Stability): MOISTURE, AIR, LIGHT, HEAT & OTHER IGNITION SOURCES.
Materials To Avoid: STRONG OXIDIZING AGENTS, MAGNESIUM, ALUMINUM.
Hazardous Decomp Products: TOXIC FUMES
Hazardous Poly Occur: NO

Health Hazard Data

Route Of Entry - Inhalation: YES
Route Of Entry - Skin: YES
Route Of Entry - Ingestion: YES
Health Haz Acute And Chronic: SKIN: MAY BE HARMFUL IF ABSORBED. CAN CAUSE IRRITATION. INHALATION: MAY BE HARMFUL. DUST &/VAPORS CAN CAUSE RESPIRATORY

TRACT IRRITATION. CAN BE IRRITATING TO MUCOUS MEMBRANCES. INGESTION: MAY BE HARMFUL. EYES: IRRITATION. EXPOSURE CAN CAUSE LIVER DAMAGE. NARCOTIC AT HIGH CONCENTRATIONS.
Carcinogenicity - NTP: NO
Carcinogenicity - IARC: NO
Carcinogenicity - OSHA: NO
Explanation Carcinogenicity: NONE
Signs/Symptoms Of Overexp: IRRITATION, NARCOTIC.
Emergency/First Aid Proc: EYES: FLUSH CONTINUOUSLY W/WATER FOR 15-20 MINS. SKIN: FLUSH W/WATER FOR 15-20 MINS. IF NOT BURNED, WASH W/SOAP & WATER TO CLEANSE. INHALATION: REMOVE TO FRESH AIR. GIVE CPR/OXYGEN IF NEEDED & CONTINUE LIFE SUPPORT UNTIL MEDICAL ASSISTANCE ARRIVES. INGESTION: RINSE MOUTH OUT W/WATER, IF CONSCIOUS. OBTAIN MEDICAL ATTENTION IN ALL CASES.

Precautions for Safe Handling and Use

Steps If Matl Released/Spill: EVACUATE AREA. WEAR APPRORPRIATE OSHA REGULATED EQUIPMENT. VENTILATE AREA. ABSORB ON VERMICULITE/SIMILAR MATERIAL. SWEEP UP & PLACE IN APPROPRIATE CONTAINER/HOLD FOR DISPOSAL. WASH CONTAMINATED SURFACES TO REMOVE ANY RESIDUES.
Waste Disposal Method: BURN IN A CHEMICAL INCINERATOR EQUIPPED W/AN AFTERBURNER & SCRUBBER IAW/FEDERAL, STATE & LOCAL REGULATIONS.
Precautions-Handling/Storing: STORE IN A COOL DRY PLACE ONLY W/COMPATIBLE CHEMICALS. KEEP TIGHTLY CLOSED. STORE UNDER REFRIGERATION.
Other Precautions: AVOID CONTACT W/SKIN, EYES & CLOTHING. DON'T BREATH VAPORS. CONTACT LENSES SHOULDN'T BE WORN IN THE LABORATORY. ALL CHEMICALS SHOULD BE CONSIDERED HAZARDOUS. AVOID DIRECT PHYSICAL CONTACT.

Control Measures

Respiratory Protection: WEAR APPROPRIATE OSHA/MSHA APPROVED SAFETY EQUIPMENT.
Ventilation: CHEMICAL SHOULD BE HANDLED ONLY IN A HOOD.
Eye Protection: EYE SHIELDS

Transportation Data

Disposal Data

Label Data

Label Required: YES
Label Status: G
Common Name: 0-659 CIS 1,2-DICHLOROETHENE
Special Hazard Precautions: SKIN: MAY BE HARMFUL IF ABSORBED. CAN CAUSE IRRITATION. INHALATION: MAY BE HARMFUL. DUST &/VAPORS CAN CAUSE RESPIRATORY TRACT IRRITATION. CAN BE IRRITATING TO MUCOUS MEMBRANCES. INGESTION: MAY BE HARMFUL. EYES: IRRITATION. EXPOSURE CAN CAUSE LIVER DAMAGE. NARCOTIC AT HIGH CONCENTRATIONS. IRRITATION, NARCOTIC.
Label Name: CHEM SERVICE INC
Label Street: 660 TOWER LN
Label P.O. Box: 3108
Label City: WEST CHESTER
Label State: PA
Label Zip Code: 19381-3108
Label Country: US
Label Emergency Number: 215-692-3026/800-452-9994

URL for this msds http://hazard.com. If you wish to change, add to, or delete information in this archive please sent updates to dan@hazard.com.

DOW CHEM -- PERCHLOROETHYLENE, INDUSTRIAL - TETRACHLOROETHYLENE
MATERIAL SAFETY DATA SHEET
FSC: 6810
NIIN: 002709982
Manufacturer's CAGE: 71983
Part No. Indicator: A
Part Number/Trade Name: PERCHLOROETHYLENE, INDUSTRIAL

General Information

Item Name: TETRACHLOROETHYLENE
Company's Name: DOW CHEM CO
Company's Emerg Ph #: 517-636-4400
Record No. For Safety Entry: 010
Tot Safety Entries This Stk#: 012
Date MSDS Prepared: 01JAN85
Safety Data Review Date: 06FEB81
Supply Item Manager: GSA
MSDS Serial Number: BDRVX
Specification Number: O-T-236
Hazard Characteristic Code: T4

Ingredients/Identity Information

Proprietary: NO
Ingredient: PERCHLOROETHYLENE (TETRACHLOROETHYLENE) (SARA III)
Ingredient Sequence Number: 01
NIOSH (RTECS) Number: KX3850000
CAS Number: 127-18-4
OSHA PEL: 25 PPM
ACGIH TLV: 25 PPM/100STEL,A3;94
Other Recommended Limit: NONE RECOMMENDED

Physical/Chemical Characteristics

Appearance And Odor: COLORLESS LIQ
Boiling Point: 482F, 250C
Vapor Pressure (MM Hg/70 F): 13
Vapor Density (Air=1): 5.76
Specific Gravity: 1.619
Evaporation Rate And Ref: .12, HEXANE
Solubility In Water: NEGLIGIBLE

Fire and Explosion Hazard Data

Flash Point: NONE
Special Fire Fighting Proc: PRESS DEMAND SECT, RESP EQUIP

Reactivity Data

Health Hazard Data

Signs/Symptoms Of Overexp: IRRIT
Emergency/First Aid Proc: WASH & FLUSH EYES/SKIN, REMOVE TO FRESH AIR, CALL MD. DO NOT INDUCE VOMIT.

Precautions for Safe Handling and Use

Precautions-Handling/Storing: AVOID BRTHNG VAPORS

Control Measures

Respiratory Protection: VENT
Protective Gloves: PLASTIC
Eye Protection: SAFETY GLASSES

Transportation Data

Disposal Data

==========
Disposal Data Review Date: 88231
Rec # For This Disp Entry: 04
Tot Disp Entries Per NSN: 006
Landfill Ban Item: YES
Disposal Supplemental Data: IN CASE OF ACCIDENTAL EXPOSURE OR DISCHARGE, CONSULT HEALTH AND SAFETY FILE FOR PRECAUTIONS.
1st EPA Haz Wst Code New: U210
1st EPA Haz Wst Name New: TETRACHLOROETHYLENE; 1,1,2,2- TETRACHLOROETHENE
1st EPA Haz Wst Char New: TOXIC (T)
1st EPA Acute Hazard New: NO
==========

Label Data

==========
Label Required: YES
Label Status: G
Common Name: PERCHLOROETHYLENE, INDUSTRIAL
Special Hazard Precautions: IRRIT
Label Name: DOW CHEM CO
Label Emergency Number: 517-636-4400
==========
URL for this msds http://hazard.com. If you wish to change, add to, or delete information in this archive please sent updates to dan@hazard.com.

PHIPPS PRODUCT -- O-T-620 TRICHLOETHANE TECH. INHIB. - 1,1,1 TRICHLOROETHANE,TECHNICAL
MATERIAL SAFETY DATA SHEET
FSC: 6810
NIIN: 002929625
Manufacturer's CAGE: 86511
Part No. Indicator: A
Part Number/Trade Name: O-T-620 TRICHLOETHANE TECH. INHIB.

General Information

Item Name: 1,1,1 TRICHLOROETHANE,TECHNICAL
Company's Name: PHIPPS PRODUCT(DISTR) DOW CHEMICAL(MFR)
Company's Emerg Ph #: (517) 636 4400
Record No. For Safety Entry: 007
Tot Safety Entries This Stk#: 009
Date MSDS Prepared: 01JAN85
Safety Data Review Date: 14DEC78
MSDS Serial Number: BDVRX
Specification Number: OT620
Hazard Characteristic Code: J5
Unit Of Issue: CN
Unit Of Issue Container Qty: 32 OZS

Ingredients/Identity Information

Proprietary: NO
Ingredient: METHYL CHLOROFORM (1,1,1-TRICHLOROEHANE) (SARA III)
Ingredient Sequence Number: 01
Percent: 94.5
NIOSH (RTECS) Number: KJ2975000
CAS Number: 71-55-6
OSHA PEL: 350 PPM/450 STEL
ACGIH TLV: 350 PPM/450STEL;9192

Physical/Chemical Characteristics

Appearance And Odor: COLORLESS LIQUID,MILD SWEET ODOR
Boiling Point: 165F
Vapor Pressure (MM Hg/70 F): 100
Vapor Density (Air=1): 4.55
Specific Gravity: 1.321
Solubility In Water: 0.07/100GM
Percent Volatiles By Volume: 100

Fire and Explosion Hazard Data

Flash Point: NONE
Extinguishing Media: WATER FOG IF FIRE BREAKS OUT UNDER ABNORMAL CONDITIONS
Special Fire Fighting Proc: SELF CONTAINED BREATHING APPARATUS
Unusual Fire And Expl Hazrds: IN FIRE MATERIAL EMITS HIGHLY TOXIC & IRRITATING FUMES

Reactivity Data

Stability: YES
Cond To Avoid (Stability): OPEN FLAMES,WELDING ARCS,HIGH TEMPERATURE SOURCES
Materials To Avoid: STRONG ALKALIS,WATER
Hazardous Decomp Products: HYDROGEN CHLORIDE & VERY SMALL AMOUNTS OF PHOSGENE & CL*2
Hazardous Poly Occur: NO

Health Hazard Data

Signs/Symptoms Of Overexp: CONJUNCTIVITIS,DERMATITIS,DIZZINESS,METAL CONFUSION,DROWSINESS,INCOORDINATION,UNCONSCIOUSNESS
Emergency/First Aid Proc: IRRIGATE EYES WITH WATER.WASH CONTAMINATED AREAS OF BODY WITH SOAP & WATER.STOMACH WASH IF SWALLOWED,FOLLOWED BY SALINE CATHARSIS.OXYGEN IF NECESSARY.NO ADRENALINE

Precautions for Safe Handling and Use

==========

Steps If Matl Released/Spill: SELF CONTAINED BREATHING APPARATUS.SMALL LEAKS:MOP UP,WIPE UP OR SOAK UP IMMEDIATELY.REMOVE TO OUT OF DOORS.LARGE SPILLS:EVACUATE AREA.CONTAIN LIQUID;TRANSFER TO CLOSED METAL CONTAINERS. KEEP OUT OF WATER SUPPLY

Waste Disposal Method: SEND SOLVENT TO A RECLAIMER.IN SOME CASES IT CAN BE TRANSPORTED TO AN AREA WHERE IT CAN BE PLACED ON THE GROUND & ALLOWED TO EVAPORATE SAFELY

Precautions-Handling/Storing: PROTECTION FROM MOISTURE BE PROVIDED FOR BULK STORAGE & DO NOT STORE IN ALUMINUM CONTAINERS.WEAR SAFETY GOGGLES, RUBBER GLOVES,SELF CONTAINED BREATHER.

Other Precautions: STORE IN A COOL,DRY WELL VENTILATED AREA,AWAY ROM STRONG ALKALIS.AVOID BREATHING VAPORS

==========

Control Measures

==========

Respiratory Protection: SELF CONTAINED BREATHING APPARATUS

Ventilation: LIMIT CONCENTRATION IN AIR TO TLV

Protective Gloves: RUBBER

Eye Protection: SAFETY GOGGLES

Other Protective Equipment: EYE WASH STATIONS & SAFETY SHOWER

Suppl. Safety & Health Data: THE ITEM COMPOSITION IS IN VOLUME PERCENT.1, 1,1 TRICHLOROETHANE IS THE SAME AS METHYL CHLOROFORM

==========

Transportation Data

==========

Transportation Action Code: C

Trans Data Review Date: 95340

DOT PSN Code: OQD

DOT Proper Shipping Name: 1,1,1- TRICHLOROETHANE *

DOT Class: 6.1 *

DOT ID Number: UN2831 *

DOT Pack Group: III *

DOT Label: KEEP AWAY FROM FOOD *

IMO PSN Code: OVK

IMO Proper Shipping Name: 1,1,1- TRICHLOROETHANE *

IMO Regulations Page Number: 6272 *

IMO UN Number: 2831 *

IMO UN Class: 6.1 *

IMO Subsidiary Risk Label: - *

IATA PSN Code: YLY

IATA UN ID Number: 2831 *

IATA Proper Shipping Name: 1,1,1- TRICHLOROETHANE *

IATA UN Class: 6.1 *

IATA Label: TOXIC *

AFI PSN Code: YLY

AFI Prop. Shipping Name: 1,1,1- TRICHLOROETHANE *

AFI Class: 6.1 *

AFI ID Number: UN2831 *

AFI Pack Group: III *

AFI Label: KEEP AWAY FROM FOOD *

AFI Special Prov: N36 *

AFI Basic Pac Ref: A10.5 *

==========

Disposal Data

==========

Disposal Data Review Date: 88085

Rec # For This Disp Entry: 03

Tot Disp Entries Per NSN: 004

Landfill Ban Item: YES

Disposal Supplemental Data: THE ITEM COMPOSITION IS IN VOLUME PERCENT.1,1, 1 TRICHLOROETHANE IS THE SAME AS METHYL CHLOROFORM IN CASE OF ACCIDENTAL EXPOSURE OR DISCHARGE, cONSULT HEALTH AND SAFETY FILE FOR PRECAUTIONS.

1st EPA Haz Wst Code New: U226

1st EPA Haz Wst Name New: 1,1,1-TRICHLOROETHANE; METHYLCHLOROFORM

1st EPA Haz Wst Char New: TOXIC (T)

1st EPA Acute Hazard New: NO

==========

Label Data

==========

Label Required: YES

Label Status: G

Common Name: O-T-620 TRICHLOETHANE TECH. INHIB.
Special Hazard Precautions: CONJUNCTIVITIS,DERMATITIS, DIZZINESS,METAL CONFUSION,DROWSINESS,INCOORDINATION,UNCONSCIOUSNESS
Label Name: PHIPPS PRODUCT(DISTR) DOW CHEMICAL(MFR)
Label Emergency Number: (517) 636 4400
==========
URL for this msds http://hazard.com. If you wish to change, add to, or delete information in this archive please sent updates to dan@hazard.com.

THE DOW CHEMICAL -- TRICHLOROETHYLENE
MATERIAL SAFETY DATA SHEET
FSC: 6850
NIIN: 00F001443
Manufacturer's CAGE: 71983
Part No. Indicator: A
Part Number/Trade Name: TRICHLOROETHYLENE

General Information

Company's Name: THE DOW CHEMICAL COMPANY
Company's Emerg Ph #: (517) 636-4410
Record No. For Safety Entry: 001
Tot Safety Entries This Stk#: 001
Date MSDS Prepared: 01JAN85
Safety Data Review Date: 15APR85
MSDS Serial Number: BBJHS

Ingredients/Identity Information

Proprietary: YES
Ingredient: PROPRIETARY
Ingredient Sequence Number: 01

Physical/Chemical Characteristics

Appearance And Odor: COLORLESS-CHLOROFORM LIKE LIQUID.
Boiling Point: 189F
Vapor Pressure (MM Hg/70 F): 20
Vapor Density (Air=1): 4.53
Specific Gravity: 1.456
Solubility In Water: NEGLIGIBLE
Percent Volatiles By Volume: 100%

Fire and Explosion Hazard Data

Flash Point: NONE
Lower Explosive Limit: 8.0
Upper Explosive Limit: 10.5
Extinguishing Media: WATER FOG
Special Fire Fighting Proc: SELF CONTAINED RESPIRATORY PROTECTION
Unusual Fire And Expl Hazrds: NONE

Reactivity Data

Health Hazard Data

Precautions for Safe Handling and Use

Control Measures

Suppl. Safety & Health Data: 2020 DOW CENTER/MIDLAND, MI 48640

Transportation Data

Disposal Data

Disposal Data Review Date: 88102
Rec # For This Disp Entry: 01
Tot Disp Entries Per NSN: 001
Landfill Ban Item: YES
Disposal Supplemental Data: 2020 DOW CENTER/MIDLAND, MI 48640 IN CASE OF ACCIDENTAL EXPOSURE OR DISCHARGE, cONSULT HEALTH AND SAFETY FILE FOR PRECAUTIONS.
1st EPA Haz Wst Code New: U228
1st EPA Haz Wst Name New: TRICHLOROETHYLENE; TRICHLOROETHENE
1st EPA Haz Wst Char New: TOXIC (T)

```
1st EPA Acute Hazard New: NO
==============================================================================
                                Label Data
==============================================================================
Label Required: YES
Label Status: G
Common Name: TRICHLOROETHYLENE
Label Name: THE DOW CHEMICAL COMPANY
Label Emergency Number: (517) 636-4410
=====================================================================
URL for this msds http://hazard.com.  If you wish to change, add to, or
delete information in this archive please sent updates to dan@hazard.com.
```

MATHESON GAS PRODUCTS -- VINYL CHLORIDE
MATERIAL SAFETY DATA SHEET
FSC: 6810
NIIN: 00N034925
Manufacturer's CAGE: 0FB11
Part No. Indicator: A
Part Number/Trade Name: VINYL CHLORIDE

General Information

Company's Name: MATHESON GAS PRODUCTS
Company's Street: 932 PATTERSON PLANK RD
Company's City: EAST RUTHERFORD
Company's State: NJ
Company's Country: US
Company's Zip Code: 07073
Company's Emerg Ph #: 201-933-2400
Company's Info Ph #: 201-933-2400
Record No. For Safety Entry: 001
Tot Safety Entries This Stk#: 001
Status: SMJ
Date MSDS Prepared: 01OCT85
Safety Data Review Date: 09OCT92
MSDS Serial Number: BQCBT
Hazard Characteristic Code: G2

Ingredients/Identity Information

Proprietary: NO
Ingredient: ETHYLENEM, CHLORO-; (VINYL CHLORIDE) (SARA III)
Ingredient Sequence Number: 01
NIOSH (RTECS) Number: KU9625000
CAS Number: 75-01-4
OSHA PEL: SEE 1910.1017
ACGIH TLV: 5 PPM, A1; 9293

Physical/Chemical Characteristics

Appearance And Odor: COLORLESS, HIGHLY FLAMM GAS WITH A PLEASANT, SWEET ODOR AT HIGH CONC.
Boiling Point: 7.2F,-13.8C
Melting Point: -245F,-154C
Vapor Pressure (MM Hg/70 F): 234KPA@21C
Specific Gravity: 2.21
Solubility In Water: 1.07 CM3/1 ML H*2O

Fire and Explosion Hazard Data

Lower Explosive Limit: 4%
Upper Explosive Limit: 22%
Extinguishing Media: TO EXTING A VINYL CHLORIDE FIRE STOP THE FLOW OF GAS. IF THE FLOW CANNOT BE STOPPED, LET THE FIRE BURN ITSELF(SUPP DATA)
Special Fire Fighting Proc: FIRE FIGHTERS MUST WEAR NIOSH/MSHA APPROVED SCBA AND FULL PROTECTIVE EQUIPMENT (FP N). FIREIGHTERS TURNOUT GEAR IS INADEQUATE.
Unusual Fire And Expl Hazrds: CYLINDERS THAT ARE EXPOSED TO FIRE MAY RUPTURE WITH VIOLENT FORCE. EXTING SURROUNDING FIRE & KEEP CYLINDERS COOL USING A WATER SPRAY APPLIED FROM THE(SUPP DATA)

Reactivity Data

Stability: YES
Cond To Avoid (Stability): AVOID EXPOSURE TO SUNLIGHT, HEAT, AIR, OXYGEN PEROXIDES AND OTHER STRONG OXIDIZING AGENTS.
Materials To Avoid: OXIDIZING MATLS, ACTIVE METALS, ALUMINUM ALLOYS AND ORGANOMETALLICS.
Hazardous Decomp Products: HYDROGEN CHLORIDE, PHOSGENE, CARBON MONOXIDE.
Hazardous Poly Occur: YES
Conditions To Avoid (Poly): OXYGEN (AIR), HEAT, SUNLIGHT, MOISTURE AND FREE RADICAL INITIATORS OR OTHER CATALYTIC MATERIALS.

Health Hazard Data

LD50-LC50 Mixture: NONE SPECIFIED BY MANUFACTURER.
Route Of Entry - Inhalation: YES
Route Of Entry - Skin: NO
Route Of Entry - Ingestion: YES
Health Haz Acute And Chronic: ACUTE:INHAL MAY CAUSE DROWS, BLURRED VISION, STAG GAIT, & TINGLING & NUMBNESS IN THE FEET & HANDS. IN HIGH CONC VINYL CHLORIDE ACTS AS AN ANESTHETIC. CONTACT WITH LIQ VINYL CHLORIDE MAY CAUSE SEVERE IRRITATION & BURNS. CHRONIC: VINYL CHLORIDE IS A RECOGNIZED CARCINOGEN & HAS CAUSED CANCER IN MAN.(EFTS OF OVEREXP)
Carcinogenicity - NTP: YES
Carcinogenicity - IARC: YES
Carcinogenicity - OSHA: YES
Explanation Carcinogenicity: VINYL CHLORIDE: KNOWN CARCINOGEN (NTP), GROUP 1 (IARC); OSHA REGULATED
Signs/Symptoms Of Overexp: SEE HEALTH HAZARDS.
Med Cond Aggravated By Exp: NONE SPECIFIED BY MANUFACTURER.
Emergency/First Aid Proc: INHAL: MOVE VICTIM TO FRESH AIR. IF NOT BRTHG, GIVE ARTF RESP. IF BRTHG IS DIFFICULT, GIVE OXYGEN. CALL A PHYSICIAN. EYE/SKIN: IMMED FLUSH EYE/SKIN WITH PLENTY OF WATER FOR AT LEAST 15 MIN. REMOVE CONTAMINATED CLOTHING AND SHOES. CALL A PHYSICIAN. INGEST: GET MD IMMEDIATELY (FP N). NOTE: SKIN BURNS CAN BE TREATED BY THE APPLICATION OF MAGNESIUM PASTE (MAGNESIUM OXIDE AND GLYCERINE).

Precautions for Safe Handling and Use

Steps If Matl Released/Spill: EVACUATE AREA. PERSONNEL EQUIPPED W/SPECIAL PERSONAL PROTECTIVE SUITS FOR FIRE/CHEMICALS AND POSITIVE PRESSURE NIOSH/MSHA APPROVED SCBA CAN RE-ENTER THE AREA AND ATTEMPT TO STOP LEAK.
Neutralizing Agent: NONE SPECIFIED BY MANUFACTURER.
Waste Disposal Method: DISPOSAL MUST BE IN ACCORDANCE WITH FEDERAL, STATE AND LOCAL REGULATIONS (FP N).
Precautions-Handling/Storing: CYLINDERS SHOULD BE STORED AND USED IN DRY, WELL VENT AREAS AWAY FROM SOURCES OF HEAT OR IGNITION. DO NOT STORE WITH OXIDIZERS.
Other Precautions: BEFORE USING: 1)SECURE CYLINDER TO PVNT IT FROM FALLING OR BEING KNOCKED OVER. 2) INSTALL CHECK VALVES/TRAPS TO PVNT SUCKBACK TO CYLNDER. 3)LEAK CHECK LINES & EQUIP. 4) HAVE APPRVD RESP PROT & OTHER PROT EQUIP. 5) HAVE AN EMER (SUPP DAT

Control Measures

Respiratory Protection: NIOSH/MSHA APPROVED POSITIVE PRESSURE SCBA SHOULD BE WORN IF IT IS SUSPECTED THAT VINYL CHLORIDE IS IN THE AIR.
Ventilation: NONE SPECIFIED BY MANUFACTURER.
Protective Gloves: IMPERVIOUS GLOVES.
Eye Protection: CHEM WORK GOGG/FULL LENGTH FSHLD (FP N).
Other Protective Equipment: EYE WASH STATIONS & SAFETY SHOWERS READILY AVAILABE.
Work Hygienic Practices: NONE SPECIFIED BY MANUFACTURER.
Suppl. Safety & Health Data: EXTING MEDIA:OUT WHILE COOLING CYLINDER & SURROUNDINGS USING A H*2O SPRAY. EXPLO HAZ:MAX POSS DISTANCE. FLAMM & TOX GASES MAY SPREAD FROM A SPILL AFTER FIRE IS EXTING & BE SUBJECT TO REIGNIT. THERMAL DECOMP PRODS MAY INCL HCL & PHOSGENE (FP N). OTHER PREC: PLAN COVERING STEPS TO BE TAKEN IN CASE OF ACCIDENTAL RELEASE.

Transportation Data

Trans Data Review Date: 93083
DOT PSN Code: PRS
DOT Proper Shipping Name: VINYL CHLORIDE, INHIBITED OR VINYL CHLORIDE, STABILIZED *
DOT Class: 2.1
DOT ID Number: UN1086
DOT Label: FLAMMABLE GAS
IMO PSN Code: PJJ
IMO Proper Shipping Name: VINYL CHLORIDE, INHIBITED
IMO Regulations Page Number: 2186
IMO UN Number: 1086
IMO UN Class: 2(2.1)
IMO Subsidiary Risk Label: -
IATA PSN Code: ZHW

IATA UN ID Number: 1086
IATA Proper Shipping Name: VINYL CHLORIDE, INHIBITED
IATA UN Class: 2.1
IATA Label: FLAMMABLE GAS
AFI PSN Code: ZHW
AFI Symbols: 0
AFI Prop. Shipping Name: VINYL CHLORIDE, INHIBITED
AFI Class: 2.1
AFI ID Number: UN1086
AFI Label: FLAMMABLE GAS
AFI Basic Pac Ref: 6-6,6-8

==========

Disposal Data

==========

==========

Label Data

==========

Label Required: YES
Technical Review Date: 08OCT92
Label Date: 24SEP92
Label Status: G
Common Name: VINYL CHLORIDE
Chronic Hazard: YES
Signal Word: DANGER!
Acute Health Hazard-Moderate: X
Contact Hazard-Moderate: X
Fire Hazard-Severe: X
Reactivity Hazard-Slight: X
Special Hazard Precautions: FLAMMABLE GAS! HAZARDOUS POLYMERIZATION MAY OCCUR. CYLINDERS SHOULD BE STORED AND USED IN DRY, WELL VENT AREAS AWAY FROM SOURCES OF HEAT OR IGNITION. DO NOT STORE WITH OXIDIZERS. ACUTE: INHAL MAY CAUSE DROWS, BLURRED VISION, STAG GAIT, & TINGLING & NUMBNESS IN THE FEET & HANDS. IN HIGH CONC VINYL CHLORIDE ACTS AS AN ANESTHETIC. CONTACT CANCER HAZARD. VINYL CHLORIDE IS A CARCINOGEN.
Protect Eye: Y
Protect Skin: Y
Protect Respiratory: Y
Label Name: MATHESON GAS PRODUCTS
Label Street: 932 PATTERSON PLANK RD
Label City: EAST RUTHERFORD
Label State: NJ
Label Zip Code: 07073
Label Country: US
Label Emergency Number: 201-933-2400

==========

URL for this msds http://hazard.com. If you wish to change, add to, or delete information in this archive please sent updates to dan@hazard.com.

APPENDIX D
SITE-SPECIFIC PERSONAL PROTECTIVE EQUIPMENT (PPE) PROGRAM

1. OBJECTIVE

OHM Remediation Services Corp. (OHM) personnel will be protected for chemical, physical, and environmental hazards by the appropriate personal protective equipment (PPE) when engineering and administrative controls are not effective in controlling job hazards.

2. PURPOSE

The purpose of this procedure is to address the elements of the PPE program. This PPE program conforms to the requirements found in 29 CFR 1910.120 (g) Engineering controls, work practices, and personal protective equipment for employee protection; 29 CFR 1910 Subpart I - Personal Protective Equipment - .132 General Requirements, .133 Eye and Face Protection, .135 Head Protection, .136 Foot Protection, .138 Hand Protection; and 29 CFR 1910.1200 Hazard Communication.

3. RESPONSIBILITY AND AUTHORITY

The responsibility and authority for the selection, use, and maintenance of personal protective equipment is shared between management, supervisory, health and safety, and employee personnel.

3.1 Management - Management has the responsibility to provide PPE appropriate for the hazard/s associated with expected work tasks.

3.2 Supervisors - Supervisors have the responsibility to conduct hazard assessments and ensure personnel to utilize PPE in compliance with this SOP. Supervisors may request assistance from or designate authority to health and safety personnel for hazard assessment, selection, inspection, and decontamination of PPE. The use of PPE by employees is the supervisor's responsibility.

3.3 Health and Safety Personnel - Health and safety personnel have the responsibility to assist supervisors in hazard assessment, selection, inspection, and decontamination of PPE. In the event of conflict, health and safety personnel have the authority to implement the necessary measures.

3.4 Employees - Employees have the responsibility to use, inspect, and decontaminate PPE as directed by supervisors.

4. PROGRAM ELEMENTS

Program elements define the regulatory requirements of a PPE program.

4.1 Hazard assessment - All tasks undertaken by OHM personnel will be assessed for chemical, physical, and environmental hazards present or likely to be present which necessitate the use of PPE to ensure adequate protection. This assessment shall take place prior to commencement of work.

4.2 Hazard Reassessment - The level of protection or type of personal protective equipment shall be increased when additional information on site conditions indicates that increased protection is necessary to reduce employee exposures below permissible exposure limits, published exposure levels for hazardous substances and health hazards, or other physical and environmental hazards.

4.3 PPE Selection - The regional health and safety director/manager or designee will initially select the level and types of PPE that will protect the affected employee from the hazards identified in the initial hazard assessment.

4.4 Written Certification - The site specific Health and Safety Plan (HASP) will serve as the written certification that identifies the workplace was evaluated. The HASP shall be dated. The signature line shall designate the person certifying that the evaluation has been performed.

4.5 Communication of Selection - Employees will be informed of the PPE selection decisions through reading or verbally reviewing the HASP, attending pre-project safety briefings, job safety analysis (JSA) review, or attending safety meetings.

4.6 PPE Use and Fit - The supervisor will be responsible for the proper use and fit of PPE by workers under their direction and will monitor the effectiveness of these items. Heath and safety personnel will advise and assist the supervisor in these areas.

4.7 Work Mission Duration - The supervisor will be responsible for the establishment of the duration of specific work missions. The duration will be determined by the complexity of the assignment, PPE involved, physical factors, temperature, humidity, weather conditions, elevation of work, and acclimation of the worker to the demands of the task assigned. The supervisor will consider the recommendations of the health and safety personnel.

A sufficient amount of rest breaks will be allowed in order to avoid overexertion or thermal stress by the employees while maintaining productive work practices. Further guidance is offered in OHM Health and Safety Procedures entitled Heat Stress and Cold Stress.

4.8 PPE Maintenance and Storage - Each employee is responsible for the proper maintenance and storage of the standard issue equipment (e.g., hard hat, full-face piece negative pressure respirator, safety glasses). The supervisor will assure that proper maintenance is carried out.

4.9 PPE Decontamination - Each employee is responsible for daily cleaning and decontamination of reusable PPE such as outer gloves, outer boots, reusable chemically resistant clothing, and standard issue PPE such as hard hats and respirators.

OHM will provide an area/s for decontamination operations, necessary cleaning agents, cleaning tools, such as brushes and wash basins, and a method to dispose of materials generated during decontamination activities.

OHM will attempt to reduce decontamination requirements through the use of disposable protective clothing and gloves as feasible.

4.10 PPE Training - All employees will receive training in the proper use of PPE prior to wearing the equipment in a work situation. This training will be administered upon commencement of employment during HAZWOPER training. PPE refresher training will be reviewed annually during the HAZWOPER refresher training. Project specific training will be provided as required.

4.11 PPE Donning and Doffing Procedures - All employees will receive training upon commencement of employment and during annual refresher training concerning the donning and doffing of PPE. Periodic training will be provided as required.

4.12 PPE Inspection - Each employee shall inspect PPE for defects and proper function prior to each use. Defective or damaged PPE shall not be used. Any PPE found to be defective or have missing parts will be replaced prior to use.

4.13 PPE In Use Monitoring - The supervisor is responsible for monitoring the effectiveness of selected PPE. If at any time level of PPE is to be downgraded, it is mandatory that the change be approved by the regional health and safety director/manager or designee.

4.14 Evaluation of PPE Program - Health and safety personnel will compile data on PPE in the field to determine that the PPE performs to OHM needs. Periodically, this information should be reviewed cognizant health and safety professional to ensure that PPE is providing the necessary level of protection, quality, and is appropriate for the work performed.

If at any time the failure of PPE causes injury to an employee or fails to perform as expected, the supervisor will take the unit or item out of service and investigate the incident. The incident shall be immediately reported to the regional health and safety director/manager. If after scrutiny, the unit or item is determined to have a manufacturing defect, all identical units will be removed from use until corrective actions are taken.

4.15 Limitations During Temperature Extremes - Extreme temperatures exert stress on personnel and may alter the performance characteristics of PPE. During periods of extreme temperature, work assignments will be adjusted to protect the employee from overexertion or exposure. The supervisor will evaluate if temperature extremes are effecting performance characteristics of PPE and report these findings to the regional health and safety director/manager.

4.16 Unserviceable PPE - Any PPE which is no longer functioning properly or is no longer serviceable shall be removed from use and either repaired or destroyed.

5. SAFETY EQUIPMENT POLICY

OHM will provide, maintain, and replace personal protective equipment as detailed below.

5.1 Standard issue safety equipment - Standard issue safety equipment will be provided at no cost to field employees. These items consist of:

- Hard hat
- Safety glasses with clear and shaded lenses
- Full-face respirator with nose cup

5.2 Company provided equipment - OHM will provide at no cost to the employee the following items on a task specific or project specific basis:

- Chemical protective equipment such as gloves, boots, and clothing
- Specialty glasses or goggles

- Face shields
- Flame resistant clothing
- Hearing protection
- Fall protection

5.3 Employee provided equipment - The employee shall provide the following equipment:

- ANSI approved steel toed and shank boots/shoes (Note: Further guidance is provided in Section 7 Safety footwear)
- Outerwear for cold weather

5.4 Equipment replacement - OHM will replace worn-out or work-damaged equipment detailed in 5.1 and 5.2. OHM reserves the right to charge employees for the replacement cost of equipment which is lost or damaged though neglect or abuse.

5.5 Additional PPE - The regional health and safety director/manager or the supervisor may require additional company provided PPE on a task specific basis.

6. WORK CLOTHES

OHM employees, subcontractors, and visitors will observe the requirements for proper work clothing when on OHM project sites, facilities, and shops.

6.1 Pants - Long pants are required at all times. These pants must be in good repair.

6.2 Shirts - Shirts will be worn on the job. Shirts will be buttoned up the front and at the cuff unless rolled up. Shirt tails must be kept in the trousers. Sleeveless shirts are prohibited at all work locations. Supervisory personnel are expected to wear a shirt with a collar. T-shirts are permitted for personnel who wear protective clothing most of the day.

6.3 Clothing - Loose or ragged clothing will not be worn.

6.4 Modifications - Regional health and safety director/manager may modify work clothing requirements on a project specific basis.

6.5 Contaminated Clothing - Clothing (including shoes) saturated with petroleum products or chemicals will be removed immediately to prevent irritation and possible dermal exposure.

6.6 Jewelry - Rings and other jewelry (except watches) must be removed when working in areas where they could catch on moving objects, sharp protrusions, come in contact with electrical circuits or chemical agents, or compromise PPE ie. rings capable of cutting gloves. Additionally, the supervisor may deem other types of jewelry inappropriate for the work task.

6.7 Hair Length - Hair long enough to constitute a hazard while working around moving machinery or rotating tools and equipment must be secured by a net or tied back. Hair styles must not interfere with the ability to properly wear safety headgear, safety spectacles, and respiratory protection.

7. EYE/FACE PROTECTION

All OHM employees, subcontractors, and visitors shall wear eye and face protection meeting the requirements of ANSI document Z87.1 - 1989 titled "Practice of Occupational and Educational Eye and Face Protection" during the tasks posing exposure to eye or face injury.

7.1 Requirements - To protect the face and eyes against injuries from flying objects, splashing liquids, and harmful rays, safety spectacles with side shields, goggles, face shields, cutting goggles, and welding helmets will be used as appropriate. The supervisor will be responsible to identify the need for eye/face protection and specify the eye/face protection required for each operation. A selection guide is attached in Table 1.

7.2 Safety spectacles - Safety spectacles are protective devices intended to shield the wearer's eyes from a variety of hazards. While they are primary protectors and may be used alone, they may also be used in conjunction with other protective devices such as goggles and face shields.

7.3 Goggles - Goggles are protective devices intended to fit the face immediately surrounding the eyes in order to shield the eyes from a variety of hazards. While they are primary protectors and may be used alone, they also may be used in conjunction with other protectors.

7.4 Face shields - Face shields are protective devices intended to shield the wearer's face, or portions thereof, in addition to the eyes, from certain hazards. Face shields are secondary protectors and shall be used with primary protectors.

7.5 Cutting goggles - Cutting goggles are protective devices designed to protect the eyes from radiation and impact. Goggles are primary protectors and in some situations must be supplemented with face shields. See Table 2 for selection guidelines.

7.6 Welding helmets - Welding helmets are protective devices intended to shield the eyes and face from optical radiation and impact. Welding helmets are secondary protectors and shall be used only in conjunction with primary protectors such as safety spectacles or goggles. See Table 3 for selection guidelines.

7.7 Prescription Spectacles - For personnel that wear prescription spectacles, OHM provides prescription safety spectacles with side shields. It is mandatory that prescription safety spectacles not be altered by the employee and be worn at all times when safety spectacles are required.

7.8 Contact lenses - Contact lenses are not permitted to be worn where accidental eye contact with chemical agents or physical materials is possible. OHM provides prescription spectacles and other protective devices for use in these situations.

7.9 Shaded lenses - Shaded lenses are not to be worn indoors or under low light conditions.

8. SAFETY HEADGEAR

All OHM employees, subcontractors, and visitors shall wear safety headgear meeting the requirements of ANSI document Z89.1-1986 titled "Protective Headwear for Industrial Workers - Requirements" when exposed to overhead hazards.

8.1 Requirement - Safety headgear shall be worn by all personnel while engaged in work where there is a hazard of falling objects, low overhead restrictions, and other overhead hazards exist. Safety headgear may also be required to be worn by contractual requirements.

8.2 Use - Safety headgear must be worn as prescribed by the manufacturer in the bill front position unless the headgear was approved to be worn in another position.

8.3 Modifications - Safety headgear shall not be painted, drilled or modified in any manner. Use of safety related headgear stickers are permitted.

8.4 Life Expectancy - No maximum mandatory service life is specified by regulation for safety headgear. However, a hard hat should be removed from service if chemical corrosion, cracks, deformities, worn suspension, or discoloration is noted with the unit.

9. SAFETY FOOTWEAR

All OHM employees, subcontractors, and visitors that enter OHM project sites and are exposed to foot hazards shall wear footwear meeting the ANSI document Z41 - 1991 titled "Protective Footwear" during operations posing foot injury.

9.1 Project Sites - Steel toe and shank leather work boots shall be worn on all OHM project sites. High top or low top sneakers, western style boots, or other footwear even though ANSI approved are not appropriate for the activities encountered at hazardous waste and emergency response sites and shall not be worn.

9.2 OHM Facilities and Shops - Personnel working at OHM shops and facilities have the option of wearing other types of ANSI approved safety work shoes and boots provided they are appropriate for the tasks being performed. The supervisor of the work area is responsible to decide what type footwear is appropriate.

10. HAND PROTECTION/GLOVES

OHM employees, subcontractors, and visitors will don appropriate gloves when engaged in any operation that presents a hazard to the hands.

10.1 Use - Appropriate work gloves shall be available for hand protection against heat and flame, cold, chemicals, petroleum products, corrosive materials, moisture, mechanical abrasion, electricity, and sharp and rough surfaces.

10.2 Selection - Glove selection of the appropriate hand protection shall be based on an evaluation of the performance characteristic of the hand protection relative to the task(s) to be performed, chemical concentration and properties, physical conditions present, duration of use, and the hazards and potential hazards identified. The type of work gloves used must be approved by the regional health and safety director/manager and designee as specified in the HASP for the particular task.

10.3 Electrical - When working on high voltage (480 volts and above) electrical equipment, electrically tested high voltage gloves will be worn. Leather protection will be worn over these gloves. (NOTE: Only authorized personnel are permitted to work on High Voltage electrical equipment).

11. PROTECTIVE CLOTHING

OHM employees, subcontractors, and visitors will don appropriate protective clothing when engaged in any operation that presents a hazard to the body.

11.1 Use - Appropriate clothing shall be available for body protection against heat and flame, cold, chemicals, petroleum products, corrosive materials, moisture, mechanical abrasion, electricity, and sharp and rough surfaces.

11.2 Selection - Clothing selection of the appropriate body protection shall be based on an evaluation of the performance characteristic of the body protection relative to the task(s) to be performed, chemical concentration and properties, physical conditions present, duration of use, and the hazards and potential hazards identified. The type of protective clothing used must be approved by the regional health and safety director/manager and designee and specified in the HASP for the particular task.

12. TOTALLY-ENCAPSULATING CHEMICAL PROTECTIVE SUITS

Totally-encapsulating chemical protective suits (Level A) shall be used in conditions where skin absorption of a hazardous substance may result in a substantial possibility of immediate death, immediate serious illness or injury, or impair the ability to escape.

12.1 Use - OHM will only use Level A protection when all other reasonable efforts of controlling employee exposure through engineering or administrative means are not possible.

12.2 Authorization - Level A protection may only be used after authorization of the regional health and safety director/manager has been granted.

12.3 Health and Safety Personnel - An appropriately experienced health and safety employee must be assigned to the project site where Level A is to be used. They must evaluate that the following items are ready:

- Communications
- Decontamination
- Emergency rescue procedures and personnel
- Emergency medical attention

12.4 OHM will discard and properly dispose of any Level A suit which has come in contact with chemical contaminants or sustained physical damage at least at the end of the project.

13. LOANING PERSONAL PROTECTIVE EQUIPMENT

OHM personnel should not loan OHM personal protective equipment to any client, subcontractor, or visitor personnel. If there are urgent circumstances, such as an emergency response where the equipment cannot be obtained elsewhere and chemical exposure is possible, OHM personnel can loan personal protective equipment such as respirators, protective clothing and other safety equipment to client personnel or personnel from other organizations. However because of the potential liability involved, approval of senior OHM management is required as well as the requirement that a representative of the company and the individual using the equipment execute an OHM Indemnification and Release Agreement. A copy of this agreement is attached in Appendix A.

13.1 Execution of Indemnification and Release Agreement - In general, the following will be required BEFORE the personal protective equipment may be loaned:

- The OHM Regional Vice President (or designee) must specifically authorize the loaning of personal protective equipment on the particular project.
- An authorized representative of the company whose personnel will use the equipment must sign the Indemnification and Release Agreement.
- The individual who will use the equipment must also sign the Indemnification and Release Agreement attesting to the fact that the individual is either experienced in the use of the equipment or has been given instruction on the safe use of the equipment and is medically qualified to wear the equipment.
- An OHM representative must also sign the form as a witness to the above.

13.2 Contractual Requirement - An indemnification and release agreement is not required if providing personal protective equipment to clients or regulatory personnel is a contractual requirement.

13.3 Exemptions - Hard hats, safety glasses, hearing protection, and protective clothing provided for cleanliness is exempted for the indemnification requirement. Instruction should be provided to the individual prior to wearing.

OHM Remediation
Services Corp.
A Subsidiary of OHM Corporation

APPENDIX A
OHM REMEDIATION SERVICES CORP.
INDEMNIFICATION AND RELEASE AGREEMENT
FOR PERSONAL PROTECTION CLOTHING

FOR AND IN CONSIDERATION OF the use by the undersigned of property belonging to OHM Remediation Services Corp. (hereinafter referred to as "OHM") and which may include full-face mask respirators, self-contained breathing apparatus, and other equipment and supplies, and other good and valuable consideration, the undersigned , for himself and his successors, and assigns, does hereby release and discharge OHM, its officers, employees, agents, and subcontractors from any and all claims, actions, demands, damages, costs, loss of services, expenses, compensation, third-party actions, or suits, including attorneys fees, arising and resulting from the aforementioned use of property, equipment, or supplies belonging to OHM.

In addition, the undersigned, on behalf of his employer, principal, himself, and his successors, and assigns, agrees to release, save, and hold harmless, protect, indemnify, and defend OHM, and its officers, employees, agents, and subcontractors against any and all claims, actions, and expenses as above described, whether for bodily injury, property damage or destruction, or both, arising or resulting in any way from the use by the undersigned of property of OHM and agrees to save, hold harmless, protect, indemnify, and defend OHM against any such claims, actions, or expenses, referenced above, that might be brought against OHM by any third persons or the heirs, successors, executors or assigns of the undersigned.

The undersigned acknowledges by signing that he has carefully read this Agreement, understands the contents thereof, and has freely and voluntarily signed the same.

EXECUTED on _____, 19___.

1. OHM Regional Vice President (or designee) authorizing use of equipment:

   _____

2. CLIENT OR SUBCONTRACTOR REPRESENTATIVE AUTHORIZING EQUIPMENT USE:

   I authorize the individual(s) in 3. below to use OHM provided personal protective equipment

   Company Name_____

   Sign Name_____

   Print Name_____

   Title_____

3. INDIVIDUAL USING EQUIPMENT: I certify that I am familiar with the equipment and medically qualified to wear the equipment

   Company Name_____

   Sign Name_____

   Print Name_____

   NOTE: A continuation sheet can be used if more than one individual is to be certified to use equipment

4. OHM Representative Acknowledging Signatures:

   Sign Name_____

OHM Remediation Services Corp.
A Subsidiary of OHM Corporation

TABLE 1
FACE PROTECTION SELECTION GUIDELINES

Hazard	Protection
Flying fragments, objects, large chips, particles, sand, and dirt from chipping, grinding, machining, masonry work, riveting, and sanding	Safety spectacles or goggles Supplement with face shield for severe exposure
Chemical splash from corrosive and chemical handling, pressure washing operations shield for severe exposure	Goggles Supplement with face
Nuisance dust from woodworking, buffing, and general dusty conditions	Safety spectacles or goggles
Hot sparks from grinding operations	Safety spectacles or goggles Supplement with face shield for severe exposure
Molten metal from torch cutting operations	Shaded cutting goggles (see Table 3) and face shield
Welding operations	Safety spectacles and shaded welding hood (see Tables 2)

TABLE 2

GUIDE FOR CUTTING SHADE NUMBERS

Operation	Plate Thickness	Minimum Protective Shade
Gas Welding		
Light	Under 1/8	4 or 5
Medium	1/8 to 1/2	5 or 6
Heavy	over 1/2	6 or 8
Oxygen Cutting		
Light	Under 1	3 or 4
Medium	1 to 6	4 or 5
Heavy	Over 6	5 or 6

TABLE 3

GUIDE FOR WELDING SHADE NUMBERS

Operation	Electrode Size 1/32 inch	Arc Current (A)	Minimum Protective Shade	Suggested* Shade No. (Comfort)
Shielding metal arc welding	Less than 3	Less than 60	7	—
	3-5	60-160	8	10
	5-8	160-250	10	12
	More than 8	250-550	11	14
Gas metal arc welding and flux cored arc welding		Less than 60	7	—
		60-160	10	11
		160-250	10	12
		250-500	10	14
		150-500	10	14
Air carbon	(Light)	Less than 500	10	12
Air cutting	(Heavy)	500-1000	11	14
Plasma arc welding		Less than 20	6	6 to 8
		20-100	8	10
		100-400	10	12
		400-800	11	14
Plasma arc cutting	(Light)	Less than 300	8	9
	(Medium)	300-400	9	12
	(Heavy)	400-800	10	14
Torch brazing		—	—	3 or 4
Torch soldering		—	—	2
Carbon arc welding		—	—	14

*As a rule of thumb, start with a shade that is too dark to see the weld zone. Then go to a lighter shade which gives sufficient view of the weld zone without going below the minimum. In oxyfuel gas welding or cutting where the torch produces a high yellow light, it is desirable to use a filter lens that absorbs the yellow or sodium line in the visible light of the (spectrum) operation.

APPENDIX E
BURIED UTILITY LOCATION AND ASSOCIATED SUBSURFACE FIELD ACTIVITIES

SOP 7-11 **BURIED UTILITY LOCATION AND ASSOCIATED SUBSURFACE FIELD ACTIVITIES**

1. OBJECTIVE

This Standard Operating Procedure (SOP) defines the responsibilities and procedures for utility identification, location and associated subsurface field activities at project sites.

2. SCOPE

This procedure applies to all subsurface field activities performed by OHM, including excavation and subsurface field investigations involving mechanical equipment (i.e., drilling) at project sites.

3. REQUIREMENTS

All subsurface field activities performed by OHM require buried utilities to be identified and located prior to performing subsurface field activities at the project site. Buried utilities required to be identified and located include: pressurized utility lines, telephone and electrical cable. Once the buried utility is identified and located, all associated subsurface field activities must be performed in accordance with this SOP. Any deviations from these procedures must be approved by the Regional Health and Safety Director.

4. RESPONSIBILITIES

4.1 Project Manager. The project manager is responsible for allocating adequate resources to implement this SOP, for coordinating buried utility location procedures with the utility and for directing the site supervisor to implement this procedure at the project site. The project manager is also responsible for verifying that required documentation be maintained in the Site Safety Plan and project files.

4.2 Site Supervisor. The site supervisor is responsible for implementing this procedure at the project site. The site supervisor is also responsible for documenting the utility locations on the site map and listing the utility emergency contacts in the Site Safety Plan.

5. PROCEDURE

5.1 Buried Utility Location

5.1.1 Contact the local utility company or utility service locator in your geographic area and identify which underground utilities (i.e., electrical, gas, water, telephone, cable) need to be identified in your proposed excavation/drilling area. A listing of One Call Systems is attached as you may need to consult the local telephone directory or utility company.

5.1.2 Inform the utility company or utility service locator with the exact location of your proposed excavation/drilling area and depth. Provide suitable plans, drawings, and/or maps of the proposed excavation/drilling area and depth. Provide the utility company or locator service a realistic over-estimate of the area to be cleared of underground utilities when the excavation area or depth is in question. Obtain "as built" drawings from clients showing utility locations on-site when available. In some cases, ElectroMagnetic (EM) or Ground Penetrating Radar (GPR) surveys of the proposed work area may be appropriate when little or no information is available on the proposed excavation/drilling area at abandoned industrial facilities.

5.1.3 Where feasible, arrange for a responsible OHM person, familiar with proposed excavation/drilling activities, to meet each utility representative or locator service at the site prior to site mobilization.

5.1.4 At a minimum, follow up with each utility company or locator service that was provided with suitable plans, drawings or maps and confirm that the proposed excavation/drilling area to be cleared is correctly interpreted by the utility company or locator service.

5.1.5 Once buried utilities have been identified by the utility company or locator service, document their location on the site map and attach to the site safety plan.

5.1.6 List the names and telephone numbers of each utility company and locator service representative who marked utilities

on-site, attach to the site safety plan for use in the event of a site emergency.

5.2 Associated Subsurface Field Activities

5.2.1 All identified buried utilities within 15 feet of subsurface field activities (i.e., excavations, drilling) will be manually exposed by hand excavation, hand augering or air knife techniques to verify the utility location.

5.2.2 For excavation activities adjacent to the utilities, hand excavation is required at 15 feet intervals along the utility length until the identified utility location is 15 feet outside the excavation area.

5.2.3 Hand excavations are required to expose 2 feet on either side of a low pressure line or telephone cable.

5.2.4 Hand excavations are required to expose 4 feet on either side of a high pressure line or electrical cable.

5.2.5 Heavy equipment/excavation operations must be prohibited 2 feet from a low pressure line or electrical cable and 4 feet from a high pressure line or electrical cable. A spotter is required in the immediate vicinity of these heavy equipment/excavation operations to warn operators as to their proximity to the utility.

5.2.6 For drilling activities, hand augering or hand excavation is required to the anticipated depth of the buried utility, but at least 5 feet, when drilling operations are within 15 feet of an identified and marked buried utility.

5.2.7 Excavation spotters and drillers must be made aware of the potential risk for encountering buried utilities, even after proper utility location procedures have been followed.

ONE CALL SYSTEMS INTERNATIONAL

ALABAMA

Alabama Line Location Center

(Miss All)

1-800-292-8525 M-F -- 0700 - 1700

ALASKA

Locate Call Center of Alaska, Inc.

1-800-478-3121 M-F -- 0800 - 1700

ARIZONA

1-800-STAKE-IT (1-800-782-5348)

Press 1 for **Tucson Blue Stake Center**

M-F -- 0700 - 1630

Press 2 for **Arizona Blue Stake, Inc.**

M-F -- 0600 - 1630

ARKANSAS

Arkansas One Call System, Inc.

1-800-482-8998

M-F -- 0600 - 2100, 0700 - 1700 S

CALIFORNIA

Underground Service Alert North

Underground Service Alert South

1-800-227-2600 M-F -- 0700 - 1700

COLORADO

Utility Notification Center of Colorado

1-800-922-1987 M-F -- 0700 - 1700

CONNECTICUT

Call Before You Dig

1-800-922-4455 24 Hours

DELAWARE

Miss Utility of Delmarva

1-800-282-8555 M-F -- 0700 - 1800

DISTRICT OF COLUMBIA

Miss Utility

1-800-257-7777 M-F -- 0700 - 1700

FLORIDA

Call Sunshine

1-800-432-4770 M-F -- 0700 - 1700

GEORGIA

Utilities Protection Center, Inc.

1-800-282-7411 M-F -- 0700 - 1900

IDAHO

Palouse Empire Underground Coordinating Council

1-800-822-1974 M-F -- 0730 - 1700

Utilities Underground Location Center

1-800-424-5555

M-F -- 0600 - 1700 24 Hours

Kootenai County Utility Coordinating Council

1-800-428-4950 24 Hours

Shoshone County One Call

1-800-398-3285 24 Hours

Dig Line

1-800-342-1585 24 Hours

One Call Concepts

1-800-626-4950

M-F -- 0500 - 1700 24 Hours

ILLINOIS

Julie, Inc.

1-800-892-0123 24 Hours

Digger (Chicago Utility Alert Network)

312-744-7000 24 Hours

INDIANA

Indiana Underground Plant Protect. Serv., Inc.

1-800-382-5544 24 Hours

IOWA

Underground Plant Location Service, Inc.

1-800-292-8989 24 Hours

KANSAS

Kansas One Call Center

1-800-344-7233

M-F -- 0700 - 1800 24 Hours

KENTUCKY

Kentucky Underground Protection, Inc.

1-800-752-6007 M-F -- 0700 - 1800

LOUISIANA

Louisiana One Call System, Inc.

1-800-272-3020 M-F -- 0700 - 1800

MAINE

Dig Safe - Maine

1-800-225-4977 24 Hours

MARYLAND

Miss Utility

1-800-257-7777 M-F -- 0700 - 1700

Miss Utility of Delmarva

1-800-282-8555 M-F -- 0700 - 1700

MASSACHUSETTS

Dig Safe - Massachusetts

1-800-322-4844 24 Hours

MICHIGAN

Miss Dig System, Inc.

1-800-482-7171 24 Hours

MINNESOTA

Gopher State One Call

1-800-252-1166 24 Hours

MISSISSIPPI

Mississippi One-Call System, Inc.

1-800-227-6477 M-F -- 0730 - 1700

MISSOURI

Missouri One Call System, Inc.

1-800-344-7483 24 Hours

MONTANA

Utilities Underground Location Center

1-800-424-5555 M-F -- 0700 - 1800

NEBRASKA

Diggers Hotline

1-800-331-5666 24 Hours

NEVADA

Underground Service Alert North

1-800-227-2600 M-F -- 0700 - 1700

NEW HAMPSHIRE

Dig Safe - New Hampshire

1-800-225-4977 24 Hours

NEW JERSEY

Garden State Underground Plant Location Service

1-800-272-1000 (in State)

M-F -- 0700 - 1700

NEW MEXICO

New Mexico One Call System, Inc.

1-800-321-ALERT M-F -- 0700 - 1700

Las Cruces-Dona Utility Council

505-526-0400 0700 - 1600 24 Hours

NEW YORK

Underground Facilities Protection Organization

1-800-962-7962

M-F -- 0700 - 1700 24 Hours

New York City - Long Island One Call Center

1-800-272-4480 M-F -- 0700 - 1700

NORTH CAROLINA

The North Carolina One Call Center, Inc.

1-800-632-4949 M-F -- 0700 - 1700

NORTH DAKOTA

Utilities Underground Location Center

1-800-795-0555 24 Hours

OHIO

Ohio Utilities Protection Service

1-800-362-2764 24 Hours

OKLAHOMA

Call Okie

1-800-522-6543 M-F -- 0700 - 1800

OREGON

Utilities Underground Location Center

1-800-424-5555

M-F -- 0600 - 1700 24 Hours

Douglas Utilities Coordinating Council

503-673-6676

M-F -- 0730 - 1100 & 1400 - 1700

Josephine Utilities Coordinating Council

503-476-6676 24 Hours

Rogue Basin Utility Coordinating Council

503-779-6676 24 Hours

Utilities Notification Center

1-800-332-2344 M-F -- 0700 - 1700

PENNSYLVANIA

Pennsylvania One Call System, Inc.

1-800-242-1776 24 Hours

RHODE ISLAND

Dig Safe - Rhode Island

1-800-225-4977 24 Hours

SOUTH CAROLINA

Palmetto Utility Protection Service, Inc. "PUPS"

1-800-922-0983 M-F -- 0730 - 1630

SOUTH DAKOTA

South Dakota One Call

1-800-781-7474 24 Hours

TENNESSEE

Tennessee One-Call System

1-800-351-1111 24 Hours

TEXAS

Texas One-Call System

1-800-245-4545 24 Hours

Texas Excavation Safety System (TESS)

1-800-344-8377 24 Hours

Lone Star Notification Center

1-800-669-8344 24 Hours

UTAH

Blue Stakes Location Center

1-800-662-4111 M-F -- 0700 - 1700

VERMONT

Dig Safe - Vermont

1-800-225-4977 24 Hours

VIRGINIA

Miss Utility of Virginia

1-800-552-7001 0700 - 1700

Miss Utility

1-800-257-7777 0700 - 1700

Miss Utility of Delmarva

1-800-441-8355 0700 - 1700

WASHINGTON

Utilities Underground Location Center

1-800-424-5555

M-F -- 0600 - 1700 24 Hours

Grays Harbor & Pacific Co. Util. Coordinating Council

206-532-3550 24 Hours

Utilities Council of Cowlitz County

360-425-2506 24 Hours

Chelan-Douglas Utilities Coordinating Council

509-663-6111 24 Hours

Upper Yakima County Underground Utilities Council

1-800-553-4344

Inland Empire Utility Coordinating Council

509-456-8000 24 Hours

WASHINGTON (continued)

Palouse Empire Utilities Coordinating Council

1-800-822-1974 M-F -- 0700 - 1700

Utilities Notification Center

1-800-332-2344 M-F -- 0700 - 1700

WEST VIRGINIA

Miss Utility of West Virginia, Inc.

1-800-245-4848 24 Hours

WISCONSIN

Diggers Hotline, Inc.

1-800-242-8511 M-F -- 0600 - 1800

WYOMING

West Park Utility Coordinating Council

307-587-4800 M-F -- 0800 - 1700

Call-In Dig-In Safety Council

1-800-300-9811

307-382-9811 (Local) 24 Hours

Fremont County Utility Coordinating Council

1-800-489-8023 24 Hours

Central Wyoming Utilities Coordinating Council

1-800-759-8035 24 Hours

Southwest Wyoming One Call

307-362-8888 24 Hours

Carbon County Underground Util. Coordinating Council

307-324-6666 24 Hours

Albany County Utility Coordinating Council

307-742-3615 24 Hours

Southeast Wyoming Utilities Coordinating Council

307-638-6666 24 Hours

Wyoming One-Call

1-800-348-1030

M-F -- 0700 - 1700 24 Hours

WYOMING (continued)

Utilities Underground Location Center

1-800-454-5555

M-F -- 0700 - 1800 24 Hours

Converse County Utility Coordinating Council

1-800-562-5561 24 Hours

CANADA

ALBERTA

Alberta One-Call Location Corporation

1-800-242-3447 M-F -- 0700 - 1700

BRITISH COLUMBIA

BC One Call

1-800-474-6886 0700 - 1700

ONTARIO

Waterloo Region Bud System

1-800-265-2288 0800 - 1700

Call "Bud"

905-527-7977 0800 - 1630

QUEBEC

Info-Excavation

1-800-663-9228 0700 - 1700

APPENDIX D
FINAL QUALITY CONTROL PLAN

FINAL
QUALITY CONTROL PLAN
FOR
GROUNDWATER REMEDIATION
Q-AREA DRUM STORAGE YARD
NAVAL BASE NORFOLK
NORFOLK, VIRGINIA

Prepared for:

DEPARTMENT OF THE NAVY
Contract No. N62470-93-D-3032
Atlantic Division
Naval Facilities Engineering Command
1510 Gilbert Street
Norfolk, Virginia 23511-2699

Prepared by:

OHM Remediation Services Corp.
Northern Region
200 Horizon Center Boulevard
Trenton, New Jersey 08691-1904

Philip Tully, P.E.
Senior Project Manager

Jimmie L. Whedbee
Program QC Manager

John P. Franz, P.E.
Program Manager

OHM Remediation Services Corp.
A Subsidiary of OHM Corporation

September 24, 1997
Delivery Order 073
OHM Project 17260QC

TABLE OF CONTENTS

1.0 STATEMENT OF QC PROGRAM 1-1

2.0 QC ORGANIZATION AND RESPONSIBILITIES 2-1

2.1 ORGANIZATION 2-1
2.2 QC MANAGERS 2-1
2.3 DUTIES, RESPONSIBILITIES, AND AUTHORITIES 2-1
2.4 APPOINTMENT LETTERS 2-2

3.0 SUBMITTALS 3-1

3.1 REVIEWING, APPROVING, AND MANAGING SUBMITTALS 3-1
3.2 PERSONNEL AUTHORIZED TO REVIEW AND CERTIFY SUBMITTALS 3-6
3.3 SUBMITTAL REGISTER 3-6

4.0 ACCREDITED LABORATORIES/TESTING LABORATORIES 4-1

4.1 TESTING LABORATORY REQUIREMENTS 4-1
4.2 ACCREDITED LABORATORIES 4-1
4.3 INSPECTION OF TESTING LABORATORIES 4-1
4.4 TEST RESULTS 4-2

5.0 TESTING PLAN AND LOG 5-1

5.1 TESTING PLAN AND LOG 5-1
5.2 TESTING 5-1

6.0 REWORK 6-1

6.1 REWORK DOCUMENTATION REQUIREMENTS 6-1

7.0 MEETINGS 7-1

7.1 COORDINATION AND MUTUAL UNDERSTANDING MEETING 7-1
7.2 QC MEETINGS 7-1

8.0 THREE PHASES OF CONTROL 8-1

8.1 PREPARATORY PHASE 8-1
8.2 INITIAL PHASE 8-1
8.3 FOLLOW-UP PHASE 8-2
8.4 NOTIFICATION OF THREE PHASES OF CONTROL FOR OFF-SITE WORK 8-2
8.5 RECEIPT INSPECTION 8-2
8.6 DOCUMENTATION 8-2

9.0 DEFINABLE FEATURES 9-1

9.1 DEFINABLE FEATURES 9-1

10.0 EXHIBITS 10-1

10.1 INDEX OF EXHIBITS 10-1

OHM Remediation Services Corporation

Delivery Order 073
Q-Area Drum Storage Yard
Naval Base Norfolk
Quality Control Plan Review

By signing this document, I am stating that I have read and understand the site Quality Control Plan for this Delivery Order/Project. Any questions or comments should be addressed to either the Program or site QC Manager.

Name (Print)	*Signature*	*Title*	*Company*	*Date*
		QC MANAGER		
		PROJECT MANAGER		
		PROJECT SUPERINTENDENT		
		PROJECT ENGINEER		
		PROJECT HYDROGEOLOGIST		
		PROJECT GENERAL FOREMAN		
		PROJECT FOREMAN		
		SITE SAFETY OFFICER		

L:\17260\QC\EXHIBITS\REVIEW.TBL

1.0 STATEMENT OF QC PROGRAM

OHM Remediation Services Corporation (OHM), a subsidiary of OHM Corporation, will provide and maintain an effective Contractor Quality Control (CQC) Program as required by contract clauses. This program will be performed in conjunction with the Program Quality Control Plan (OHM, December 14, 1995) as applicable and in accordance with the requirements of Contract No. N62470-93-D-3032, Atlantic Division, Naval Facilities Engineering Command, dated August 1993. OHM will perform the inspection and test required to ensure that materials, workmanship, and construction conform to drawings, specifications, and contract requirements. OHM will perform each test or inspection specified, unless the required inspection and/or test is specifically designated to be performed by the Government.

Note to Employees

Quality Control should not be considered a person or an organization of personnel, but a concept to perform in such a manner that the end product of our efforts meet established criterion, the customer's needs. The Quality Control individual or group cannot inspect quality into the final product, but only inspect and document the results of our efforts. The only person that can build quality into the product are the individuals performing the task of producing the end product.

It should be noted by all employees that the documentation requirements of OHM procedures, plans, and the delivery order specifications are considered equally as important as the end product itself. When it is stated that the documentation will be approved prior to the start of work, this is exactly what is intended. To eliminate problems in this area requires careful planing and execution by everyone.

We would do well to remember that our livelihood depends on how well we satisfy our customer. To accomplish this requires teamwork and attention to detail by all employees and contractors.

2.0 QC ORGANIZATION AND RESPONSIBILITIES

2.1 ORGANIZATION

The QC organization is depicted in the Organizational Chart (Exhibit 2.1). Other positions are reflected to show organizational interface and lines of communication.

2.2 QC Managers

The Program QC Manager's resume is included in the Program QC Plan and the QC Manager's resume (delivery order specific) is included herein as Exhibit 2.2.

2.3 DUTIES, RESPONSIBILITIES AND AUTHORITIES

1. The **Program QC Manager** shall report to the Program Manager and shall be responsible for developing, maintaining, and enforcing the quality control program.

2. The **QC Manager** shall report to the Program QC Manager and shall be responsible for the management and implementation of the Program QC Plan and the delivery order specific QC Plan for both on-and off-site activities. Specific duties include: attend the Coordination and Mutual Understanding Meeting; conduct the scheduled QC meetings; perform the three phases of control; perform submittal reviews; perform submittal approval except for submittals designated for Contracting Officer approval; ensure tests are performed; and prepare QC certifications and QC documentation as required by this Plan. Except for managing and implementing the QC program, the QC Manager shall perform no other duties without the authorization of the Contracting Officer. The QC Manager shall also be responsible for delivering the following documentation to the Contracting Officer:

   - Combined Contractor Production Report/Contractor Quality Control Report, original and one copy, by 10:00 a.m. the next working day after each day that work is performed.

   - Testing Plan and Log, three copies, at the end of each month.

   - Monthly Summary Report of Field Tests, original and two copies attached to the Contractor Quality Control Report at the end of each month. (See paragraph entitled "Test Results" in Section 4.0).

   - QC meeting minutes, three copies within two calendar days of the meeting.

   - Rework items list, three copies at the end of each month.

   - Completion Certification attesting that "the work has been completed, inspected, tested, and is in compliance with the contract."

3. The QC Manager is expected to attend the daily site safety meetings and abide by all site rules and regulations.

2.4 APPOINTMENT LETTERS

The appointment letter for the site QC Manager is included as Exhibit 2.4. The appointment letter for the Program QC Manager can be found in the Program QC Plan.

3.0 SUBMITTALS

3.1 REVIEWING, APPROVING, AND MANAGING SUBMITTALS

A. Contractor's Responsibility

The following responsibilities are those of the contractor and not the QC organization. They are included only for the purpose of providing an understanding of the contractor's responsibility. While the QC organization is expected to assist the contractor in fulfillment of their responsibilities, no part of these responsibilities shall be assumed by the QC organization without the expressed written permission of the Contracting Officer.

1. Coordinate preparation and processing of submittals with performance of work so that work will not be delayed by submittal processing. Allow for potential requirements to resubmit.

2. Except as specified otherwise, allow a review period, beginning with receipt by the approving authority, that includes at least 15 working days for submittals for QC Manager approval and 20 working days for submittals requiring Contracting Officer approval. The period of review for submittals with Contracting Officer approval begins when the Government receives the submittal from the QC organization. The period of review for each resubmittal is the same as for the initial submittal.

3. Determine and verify field measurements, materials, field construction criteria; review each submittal; check and coordinate each submittal with requirements of the work and contract documents.

4. Transmit submittals to the QC organization in orderly sequence, in accordance with the submittal register, and to prevent delays in the work, delays to the Government, or delays to separate contractors.

5. Correct and resubmit submittals as directed by the approving authority. Direct specific attention, in writing or on resubmitted submittals, to revisions not requested by the approving authority on previous submissions.

6. Furnish additional copies of submittals when requested by the Contracting Officer, to a maximum limit of 20 copies.

7. Complete work that must be accomplished as a basis of a submittal in time to allow the submittal to occur as scheduled.

8. Ensure no work has begun until submittals for that work have been returned as "approved" or "approved as noted" except to the extent that a portion of the work must be accomplished as a basis of the submittal.

Format of Submittals

Transmittal Form. Transmit each submittal, except sample installations and sample panels, to the office of the approving authority utilizing transmittal forms standard for the project. The transmittal form shall identify the Contractor, indicate the date of the submittal, and include information

prescribed by the transmittal form and required in the paragraph entitled "Identifying Submittals". Process transmittal forms to record actions regarding sample panels and sample installations. Transmittal forms for submittals of sample panels and sample installations shall record any actions and locations of the samples.

Identifying Submittals. Identifying submittals, except sample panel and sample installation, submittals shall be identified with the following information permanently adhered to or noted on each separate component of each submittal and noted on the transmittal form. Mark each copy of each identically, with the following:

1. Project title and location.

2. Construction contract number and delivery order number.

3. The section and paragraph number of the section for which the submittal is required.

4. The Submittal Description (SD) number (see Exhibit 3.1) of each component of the submittal.

5. If a resubmittal, add an alphabetic suffix to the submittal description, for example, SD-10A, to indicate the resubmission.

6. The name, address, and telephone number of the subcontractor, supplier, manufacturer, and any other second tier contractor associated with the submittal.

7. Product identification and location in project.

Format of Product Data

1. Present product data submittals for each section as a complete, bound volume. Include a table of contents listing page and catalog item numbers for product data.

2. Indicate, by prominent notation, each product that is being submitted, indicate the specification section number, and paragraph number to which it pertains.

3. Supplement product data with material prepared for the project to satisfy submittal requirements for which product data does not exist. Identify this material as developed specifically for the project.

Format of Shop Drawings

1. Shop drawings shall be not less than 8 ½ by 11 inches nor more than 30 by 42 inches.

2. Present 8 ½ by 11 inches sized shop drawings as a part of the bound volume for the submittals required by the section. Present larger drawings in the sets.

3. Include on each drawing the drawing title, number, date, and revision numbers and dates, in addition to the information required in the paragraph entitled "Identifying Submittals."

4. Dimension drawings, except diagrams and schematic drawings; prepare drawings demonstrating interface with other trades to scale. Identify materials and products for work shown.

Format of Samples

1. Furnish samples in the sizes below, unless otherwise specified or unless the manufacturer has prepackaged samples of approximately the same size as specified:

   - Sample of equipment or device: Full size.
   - Sample of materials less than 2 by 3 inches: Built-up to 8 ½ by 11 inches.
   - Sample of materials exceeding 8 ½ by 11 inches: Cut down to 8 ½ by 11 inches and adequate to indicate color, texture, and material variations.
   - Sample of linear devices or materials, such as conduit and handrails: 10-inch length or length to be supplied, if less than 10 inches.
   - Sample of non-solid naturals, (e.g., sand, paint, etc.): One pint, unless specified otherwise in technical sections.
   - Sample panel: 4 feet by 4 feet.
   - Sample Installation: 100 square feet.

2. Samples showing range of variation: Where unavoidable variations must be expected, submit sets of samples of not less than three units showing the extremes and middle of the range.

3. Reusable samples: Incorporate returned samples into the work only if so specified or indicated. Incorporated samples shall be in an undamaged condition at the time of use.

4. Recording of sample installation: Note and preserve the notation of the area constituting the sample installation but remove the notation at the final cleanup of the project.

5. When a color, texture, or pattern is specified in naming a particular manufacturer and style, include one sample of that manufacturer and style, for comparison.

Format of Administrative Submittals

1. When the submittal includes a document which is to be used in the project or become a part of the project record, other than as a submittal, do not apply the Contractor's approval stamp to the document, but to a separate sheet accompanying the document.

2. Operation and Maintenance Manual Data: Submit in accordance with the section entitled "Operation and Maintenance Data" of the individual delivery order.

Number of Copies of Product Data

1. Submit six (6) copies of submittals of product data requiring review and approval only by the QC organization and seven (7) copies of product data requiring review and approval by the Contracting Officer.

Number of Copies of Shop Drawings

1. For shop drawings presented on sheets larger than 8 ½ by 14 inches, submit seven (7) prints of each shop drawing prepared for this project.

2. For shop drawings presented on sheets 8 ½ by 14 inches or less, conform to the quality requirements for the product data.

Number of Samples

1. Submit two (2) samples, or two (2) sets of samples showing range of variation of each required item. One (1) approved sample or set of samples will be retained by the approving authority and one will be returned to the Contractor.

2. Submit one (1) sample panel. Include components listed in the technical section or as directed.

3. Submit one (1) sample installation, where directed.

4. Submit one (1) sample of non-solid materials.

Number of Copies of Administrative Submittals

1. Unless otherwise specified, submit administrative submittals which are 8 ½ by 14 inches or smaller in size in the quantity required for product data.

2. Unless otherwise specified, submit administrative submittals larger than 8 ½ by 14 inches in size in the quantities required for shop drawings.

B. <u>QC Organization Responsibilities</u>

The Quality Control (QC) organization shall be responsible for reviewing and certifying that submittals are in compliance with contract requirements. The approving authority on submittals is the QC Manager unless submission to the Contracting Officer is specified for the specific submittal. The specific QC responsibilities for submittals are as follows:

1. Note the date on which the submittal was received from the contractor on each submittal for which the Site QC Manager is the approving authority.

2. Determine and verify field measurements, materials, field construction criteria; review each submittal; and check and coordinate each submittal with requirements of the work and contract documents.

3. Review submittals for conformance with project design concepts and compliance with the contract documents.

4. Act on submittals, determining the appropriate action based on the review of the submittal.

   - When the QC Manager is the approving authority, take the appropriate action on the submittal from the paragraph of "Possible Actions."

   - When the Contracting Officer is the approving authority or when a variation has been proposed, forward the submittal to the Contracting Officer with the certifying statement or return the submittal marked "Not Reviewed" or "Revise and Resubmit" as appropriate.

5. Ensure that the material is clearly legible.

6. Stamp each sheet of each submittal with the appropriate stamp, except that data submitted in bound volume or on one sheet printed on two sides may be stamped on the front of the first sheet only. When agreed to by the Contracting Officer, a single cover sheet containing the required certification wording (see Exhibit 3.1a and 3.1b) may be utilized instead of the above. The stamp or cover sheet shall contain the following wording:

   - When the approval authority is the Contracting Officer, the QC organization will certify submittals forwarded to the Contracting Officer with the following certifying statement:

     I hereby certify that the (equipment) (material) (article) shown and marked in this submittal is that proposed to be incorporated into Contract Number N62470-93-D-3032, is in compliance with the Contract drawings and specification, can be installed in the allocated spaces, and is submitted for Government approval. Government approval of proposed variation, if any, is recommended.

     Certified by Submittal Reviewer _____, Date _____

     Certified by QC Manager _____, Date _____

   - When approving authority is the QC Manager, the QC Manager will use the following approval statement when returning submittals to the Contractor as "Approved" or "Approved as Noted":

     I hereby certify that the (equipment) (material) (article) shown and marked in this submittal is that proposed to be incorporated into Contract Number N62470-93-D-3032, is in compliance with the Contract drawings and specification, can be installed in the allocated spaces, and is ____ approved for use, ____ approved for use subject to Government approval of proposed variation.

     Certified by Submittal Reviewer _____, Date _____

     Approved by QC Manager _____, Date _____

7. Sign the certifying statement or approval statement. The signatures shall be in original ink. Stamped signatures are not acceptable.

8. Update the submittal register as submittal actions occur and maintain the submittal register at the project site until final acceptance by the Contracting Officer.

9. Retain a copy of approved submittals at the project site, including the contractor's copy of approved samples.

10. When the approving authority is the QC Manager, forward two copies of each approved submittal, except "Samples", where only one set is required, to the Contracting Officer.

Actions Possible

Submittals returned to the contractor shall contain one of the following notations:

1. **"Not Reviewed"** shall indicate the submittal has been previously reviewed and approved, is not required as a submittal, does not have evidence of being reviewed and approved by the Contractor, or is not complete. A submittal marked "Not Reviewed" shall be returned with explanation of the reason it is not reviewed. Returned submittals deemed to lack review by the Contractor or to be incomplete shall be resubmitted with appropriate action, coordination, or change.

2. Submittals marked **"Approved"** or **"Approved as Submitted"** authorize the Contractor to proceed with the work covered.

3. Submittals marked **"Approved as Noted"** authorize the Contractor to proceed with the work as noted provided the Contractor takes no exception to the notations.

4. Submittals marked **"Revise and Resubmit"** or **"Disapproved"** indicates the submittal is incomplete or does not comply with the design concept or the requirements of the Contract documents and shall be resubmitted with appropriate changes.

3.2 PERSONNEL AUTHORIZED TO REVIEW AND CERTIFY SUBMITTALS

In addition to the QC Manager, the personnel listed in Exhibit 3.2 are authorized to review and certify submittals as indicated. Any additional personnel required to review and certify submittals will be submitted in writing to the Contracting Officer for approval.

3.3 SUBMITTAL REGISTER

The submittal register is shown in Exhibit 3.3. The submittal register shall be maintained as follows:

1. Column (a): List each specification section in which a submittal is required.

2. Column (b): List each submittal description (SD No. and type, e.g., SD-04, Drawings) required in each specification section. Follow each submittal description with the list of material of products to be addressed in each submittal description.

3. Column (c): List one principle paragraph in the specification section where a material or product is specified. This listing is only to facilitate submittal reviews. Do not consider entries in column (c) as limiting project requirements; do not consider that a blank must be filled in by the Contractor or the Government.

4. Column (d): Indicates approving authority for each submittal. A "G" indicates approval by the Contracting Officer; a blank indicates approval by the Site QC Manager.

5. Column (e): Indicates for submittals to be approved by Contracting Officer, specific reviewers other than the QC organization.

6. Column (f): As submittals are processed, list a consecutive number assigned by the Contractor for each group of submittals. Place this same number in the appropriate block on the "Submittal Transmittal Form". For a resubmission, repeat transmittal control number of the

original submittal with a suffix; e.g., No. "100B" is second resubmission of material originally transmitted under No. "100".

7. Column (g): List dates scheduled for Contractor to order approved material for beginning a phase of work. The approving authority needs to approve the submittal prior to the Contractor ordering a material for the necessary phase of work. The Contractor proposes these dates and the Contracting Officer approves them to establish the approved submittal register.

4.0 ACCREDITED LABORATORIES/TESTING LABORATORIES

4.1 TESTING LABORATORY REQUIREMENTS

Testing services will be provided by an independent accredited testing laboratory qualified to perform sampling and tests. When the proposed testing laboratory is not accredited by and acceptable accreditation program, as described by the paragraph entitled "Accredited Laboratories," submit to the Contracting Officer for approval, certified statements signed by an official of the testing laboratory attesting that the proposed laboratory meets or conforms to the following requirements:

1. Sampling and testing shall be under the technical direction of a registered professional engineer (PE) with at least five years of experience in sampling and testing.

2. Laboratories engaged in testing of concrete and concrete aggregates shall meet the requirements of ASTM C 1077, 1990.

3. Laboratories engaged in testing of bituminous paving materials shall meet the requirements of ASTM D 3666, 1990 (Rev. A).

4. Laboratories engaged in testing of soil and rock, as used in engineering design and construction, shall meet the requirements of ASTM D 3740, 1988.

5. Laboratories engaged in nondestructive testing (NDT)/nondestructive examination (NDE) shall meet the requirements of ASTM E 543, 1989 (Rev. A).

6. Laboratories performing work in connection with specific sampling and chemical analysis of contaminated media according to the delivery order specification shall be handled as defined in the Sampling and Analysis Plan (SAP).

7. Names and qualifications of the analytical and testing laboratories will be provided once they have been identified.

4.2 ACCREDITED LABORATORIES

Acceptable accreditation programs are the National Institute of Standards and Technology (NIST), National Voluntary Laboratory Accreditation Program (NVLAP), the American Association of State Highway and Transportation Officials (AASHTO) program, and the American Association for Laboratory Accreditation (AALA) program. Furnish to the Contracting Officer, a copy of the Certificate of Accreditation, Scope of Accreditation and latest directory of the accrediting organization for accredited laboratories. The scope of the laboratory's accreditation shall include the test methods required by the contract.

4.3 INSPECTION OF TESTING LABORATORIES

Prior to approval of non-accredited laboratories, the proposed testing laboratory facilities and records may be subject to inspection by the Contracting Officer. Records subject to inspection include equipment inventory, equipment calibration dates and procedures, library of test procedures, audit and inspection reports by agencies

conducting laboratory evaluations and certifications, testing and management personnel qualifications, test report forms, and the internal QC procedures.

4.4 TEST RESULTS

Test reports shall cite applicable contract requirements, tests or analytical procedures used. Provide actual results and include a statement that the item tested or analyzed conforms or fails to conform to specified requirements. Conspicuously stamp the cover sheet for each report in large red letters "CONFORMS" or "DOES NOT CONFORM" to the specification requirements, whichever is applicable. Test results shall be signed by a testing laboratory representative authorizes to sign certified test reports. Furnish the signed reports, certifications, and other documentation to the Contracting Officer via the QC Manager. The QC Manager shall furnish a summary report of field tests by attaching a copy of the report to the last daily Contractor Quality Control Report of each month.

5.0 TESTING PLAN AND LOG

5.1 TESTING PLAN AND LOG

As tests are performed, the QC Manager shall record on the "Testing Plan and Log" (Exhibit 5.1) the date the test was conducted, the date the test results were forwarded to the Contracting Officer, any remarks and acknowledgment that an accredited or Contracting Officer approved testing laboratory was used. Attach a copy of the updated testing plan and log to the last daily Contractor Quality Control Report of each month.

In development of the Testing Plan and Log, consideration shall be given to the use of multiple Testing Plans and Logs subdivided by definable features of the specification and/or of different materials within a definable feature section of the specification. When materials are tested on a specific frequency, accumulated material totals shall be recorded in the remarks section or on an attachment to each specific Testing Plan and Log to provide assurance that the test are conducted at the required intervals.

5.2 TESTING

Except as stated otherwise in the specification sections, perform sampling and testing required under the contract.

6.0 REWORK

6.1 REWORK DOCUMENTATION REQUIREMENTS

The QC Manager shall maintain a list of work that does not comply with the contract, identifying what items need to be reworked, the date the item was originally discovered, and the date the item was corrected. There is no requirement to report a rework item that is corrected the same day it is discovered. Attach a copy of the Rework Items List (Exhibit 6.1) to the last daily Contractor Quality Control Report of each month. The Contractor shall also be responsible for including on this list, items needing rework including those identified by the Contracting Officer.

7.0 MEETING

7.1 COORDINATION AND MUTUAL UNDERSTANDING MEETING

After submission of the QC Plan and prior to start of construction, meet with the Contracting Officer to discuss the QC program required for this contract. The purpose of this meeting is to develop a mutual understanding of the QC details, including forms to be used; administration of on-site and off-site work, and coordination of the Contractor's management, production and the QC Manager's duties with the Contracting Officer. A sample agenda is included as Exhibit 7.1. As a minimum, the Contractor's personnel required to attend shall include the Project Manager, Project Superintendent and QC Manager. Minutes of the meeting shall be prepared by the QC Manager and signed by both the Contractor and the Contracting Officer.

7.2 QC MEETINGS

After the start of construction, the QC Manager shall conduct QC meetings once every two weeks or as required scheduled by the Contracting Officer or delivery order. The meetings will be held at the work site, or where specified, with the project superintendent and the foreman responsible for the upcoming work in attendance. The QC Manager shall take steps as may be necessary to prevent the QC Meeting from becoming a production meeting. Often it is convenient to hold a production meeting following the QC meeting, however the minutes of these meetings shall be maintained separate. The QC Manager shall notify the Contracting Officer at least 48 hours in advance of each meeting. The QC Manager shall prepare the minutes of the meeting and provide a copy to the Contracting Officer within two working days after the meeting. As a minimum, the following shall be accomplished at each meeting:

1. Review the minutes of the previous meeting.

2. Review the schedule and the status of work.

   - Work or testing accomplished since last meeting.

   - Rework items identified since last meeting.

   - Rework items completed since last meeting.

3. Review the status of submittals.

   - Submittals reviewed and approved since last meeting.

   - Submittals required in the near future.

4. Review the work to be accomplished in the next two weeks and documentation required. Schedule the three phases of control and testing:

   - Establish completion dates for rework items.

   - Identify Preparatory Phases required.

   - Identify Initial Phases required.

- Identify Follow-up Phases required.
- Identify Testing required.
- Identify status of off-site work or testing.
- Identify documentation required.

5. Resolve QC and production problems.
6. Address items that may require revising the QC plan such as or changes in procedures.

   In addition to the normal project distribution which includes the Contracting Officer, a copy shall be forwarded to the C.O.T.R., LANTDIV, the Program QC Manager, and the OHM Program Manager.

8.0 THREE PHASES OF CONTROL

The QC Manager shall perform the three phases of control to ensure that work complies with contract requirements. The three phases of control shall adequately cover both on-site and off-site work and shall include the Inspection Schedule activities (see Exhibit 8.0) of each definable feature of work as listed in Exhibit 9.1.

8.1 PREPARATORY PHASE

Notify the Contracting Officer at least two working days in advance of each preparatory phase. Conduct the preparatory phase meeting with the superintendent and the foreman responsible for the definable feature of work. Document the results of the preparatory phase actions in the daily Contractor Quality Control Report (Exhibit 8.1). Perform the following prior to beginning work on each definable feature of work:

- Review each paragraph of the applicable specification sections.
- Review the contract drawings.
- Verify that appropriate shop drawings and submittals for materials and equipment have been submitted and approved. Verify receipt of approved factory test results, when required.
- Review the testing plan and ensure that provisions have been made to provide the required QC testing.
- Examine the work area to ensure that the required preliminary work had been completed.
- Examine the required materials, equipment and sample work to ensure that they are on hand and conform to the approved shop drawings and submitted data.
- Review the safety plan and appropriate activity hazard analysis to ensure that applicable safety requirements are met, and that required Material Safety Data Sheets (MSDS) are submitted.
- Discuss construction methods.

8.2 INITIAL PHASE

Notify the Contracting Officer at least two working days in advance of each initial phase meeting. When crews are ready to start work on an a definable feature of work, conduct the initial phase meeting with the personnel responsible for that definable feature of work. Observe the initial segment of the definable feature of work to ensure that the work complies with contract requirements. Document the results of the initial phase in the daily Contractor Quality Control Report. Repeat the initial phase for changes in personnel assigned responsibility for the work, or when acceptable levels of specified quality are not being met. Perform the following for each definable feature of work:

- Establish the quality of workmanship required.
- Resolve conflicts.

- Review the Safety Plan and the appropriate activity hazard analysis to ensure that applicable safety requirements are met.

- Ensure that testing is performed.

8.3 FOLLOW-UP PHASE

Perform the following for ongoing work daily, or more frequently as necessary, until the completion of each definable feature of work and document in the daily Contractor Quality Control Report:

- Ensure the work is in compliance with contract requirements.

- Maintain the quality of workmanship required.

- Ensure that testing is performed.

- Ensure that rework items are being corrected.

8.4 NOTIFICATION OF THREE PHASES OF CONTROL FOR OFF-SITE WORK

Notify the Contracting Officer at least two weeks prior to the start of the preparatory and initial phases.

8.5 RECEIPT INSPECTION

The QC organization shall conduct Receipt Inspection of materials and equipment procured in accordance with the delivery order specification. In addition to the submittal documentation, which will be reviewed and approved as required under Section 3.0, Submittals, the following attributes will be inspected for each order/shipment as applicable:

- Material is same as specified by the Delivery Order Specification
- Quantity as specified by the procurement document
- Dimensions as required by the procurement document
- Shipping Damage
- Physical Damage
- Identification and Marking
- Protective Covers and Seals
- Cleanliness
- Workmanship

Materials and equipment found to be unacceptable at receipt inspection shall be rejected and "RED Tagged" (see Exhibit 8.5) until correction or replacement can be made. This material/equipment shall not be used until the corrective action results in satisfactory reinspection.

The results of the receipt inspection, by attribute, will be included in the Contractor Quality Control Report (Exhibit 8.1) for the date of inspection.

8.6 DOCUMENTATION

Reports are required for each day that work is performed and for every seven consecutive calendar days of no work and on the last day of no work periods. Account for each calendar day throughout the life of the contract. The reporting of work shall be identified by terminology consistent with the construction schedule. Contractor

Quality Control Reports are to be prepared, signed and dated by the QC Manager and shall contain the following information:

- Identify the control phase and the definable feature of work.
- Results of the preparatory phase meetings held, including the location of the definable feature of work and a list of personnel present at the meeting. Indicate in the report that for this definable feature of work, the drawings and specifications have been reviewed, submittals have been approved, materials comply with approved submittals, materials are stored properly, preliminary work was done correctly, the testing plan has been reviewed, and work methods and schedules have been discussed.
- Results of the initial phase meetings held, including the location of the definable features of work and a list of personnel present at the meeting. Indicate in the report that for this definable feature of work, the preliminary work was done correctly, samples have been prepared and approved, the workmanship is satisfactory, test results are acceptable, work is in compliance with the contract, and the required testing has been performed and include a list of who performed the tests.
- Results of the follow-up phase inspections held, including the location of the definable features of work. Indicate in the report that for this definable feature of work that the work complies with the contract as approved and that required testing has been performed and include a list of who performed the tests.
- Results of the three phases of control for off-site work, if applicable, include actions taken.
- List the rework items identified, but not corrected by close of business.
- As rework items are corrected, provide a revised rework items list along with the corrective action taken.
- Include in the remarks section of the report pertinent information including directions received, quality control problem areas, deviations from the QC Plan, construction deficiencies encountered, QC meetings held, acknowledgment that as-built drawings have been updated, corrective direction given by the QC Manager and corrective action taken by the contractor.
- When the QC Manager believes that an attribute list type inspection is more appropriate for the inspection of specific definable features of work, he/she may use any type of form desired for this purpose. However, this or any other form utilized shall become an attachment to the daily Contractor Quality Control Report and shall not preclude any other requirements of the contract or this plan.

9.0 DEFINABLE FEATURES OF WORK

9.1 DEFINABLE FEATURES OF WORK

Exhibit 9.1 contains a list of definable features of work for this delivery order. A definable feature of work is a task that is separate and distinct from other tasks and requires separate control requirements. As a minimum, each division of the specification is considered a definable feature of work. However, at times there may be more than one definable feature of work in each division of the specification or a definable feature of work may include several specification sections. The QC Manager shall discuss the list with the Contracting Officer for possible expansion of the list.

10.0 EXHIBITS

The following forms are acceptable for providing the information required by this QC Plan and the contract, except as otherwise directed by the Contracting Officer. While use of these specific forms are not required by the contract, any other format used shall contain the same information and be approved by the Program QC Manager. Exhibit 10.1 includes additional forms used by the contractor. These forms and their use are not addressed in this QC Plan.

NOTE: Exhibit numbers refer to the paragraph from which the Exhibit was first addressed.

10.1 INDEX OF EXHIBITS

- Exhibit 2.1 Organizational Chart
- Exhibit 2.2 Project QC Manager's Resume
- Exhibit 2.4 Project QC Manager Appointment Letter
- Exhibit 3.1 Submittal Descriptions (SD)
- Exhibit 3.2 List of Personnel Authorized to Review and Certify Submittals
- Exhibit 3.3 Submittal Register
- Exhibit 5.1 Testing Plan and Log
- Exhibit 6.1 Rework Items List
- Exhibit 7.1 Sample agenda for the Coordination and Mutual Understanding Meeting
- Exhibit 8.0 Inspection Schedule
- Exhibit 8.1 Contractor Quality Control Report
- Exhibit 8.5 Reject Tag (RED Tagged)
- Exhibit 9.1 Definable Features of Work
- Exhibit 10.1 Contractor Forms

EXHIBITS

Exhibit 2.1

OHM Remediation Services Corporation

Delivery Order No. 073

QC Organizational Chart

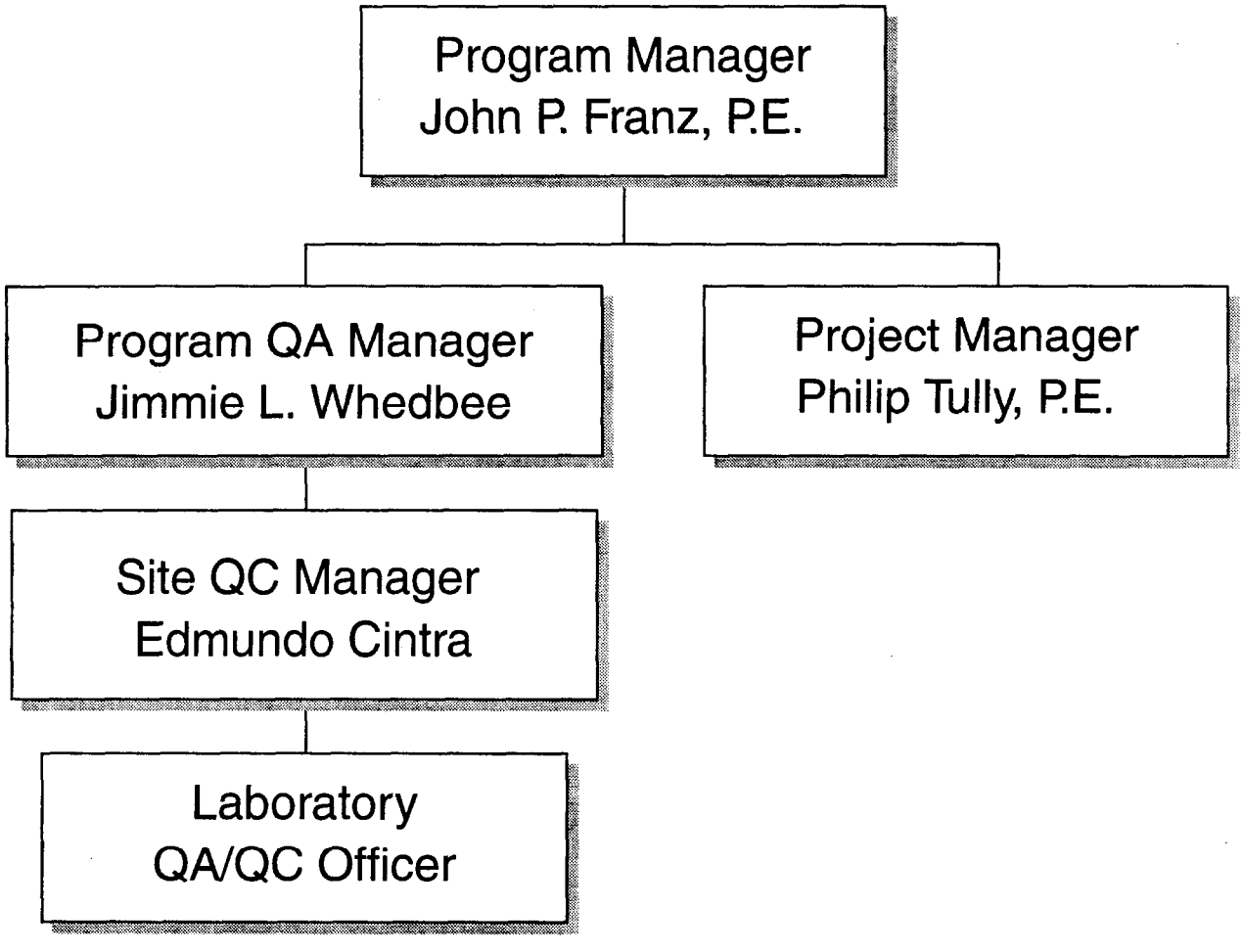

EDMUNDC E. CINTRA

Mr. Cintra has over nine years of engineering experience, including seven years of experience in project management, engineering, and design of hazardous waste site remediation projects. His responsibilities include on-site management of projects with minimal oversight by the Senior Project Manager, and assisting full-time Project Manager on larger projects. Duties include supervisory, technical, or QA/QC functions, depending on project requirements; review of specifications, proposals, and contracts for compliance with regulations; preparation of work plans, cost estimates, and project schedules; requisition of equipment and materials; tracking and reporting job progress; performance of QA/QC inspections and preparation of reports; and serving as the point of contact with the customer and regulatory agencies in the Project Manager's absence.

Experience

- Tullytown Resource Recovery Facility, Tullytown, Pennsylvania - Project consisted of the installation of a gravity leachate collection system for two cells of an active landfill. Project involved sheetpiling installation, deep trench excavation, waste excavation, horizontal boring, HDPE dual containment pipe installation, and pump house installation. Duties included QA/QC compliance with the specifications, coordination of specification changes with the client's CQA engineer, surveying, scheduling, and progress reporting.

- Ames Rubber, Hamburg, New Jersey - Project consisted of the capping of a rubber fill management area. Prepared the design report which included the work sequence, storm water drainage calculations, and piping design for the installation of the management area drainage system.

- National Lead Industries, Pedricktown, New Jersey - Performed sampling program to assist the USEPA in the waste delineation of a lead contaminated stream. Duties included preparation of proposal/work plan, sample collection, contamination delineation, and progress reporting.

- Chemical Leaman, Bridgeport, New Jersey - Prepared the UST removal application and work plan in accordance with state regulations.

- Allegheny Ballistics Laboratory, Rocket Center, West Virginia - Project consisted of the segregation of soil and waste material, previously excavated, which contained explosives, mercury, and beryllium. Prepared revised work plan to incorporate comments presented by the state and federal regulatory agencies.

- NAF Driver Site, Driver, Virginia - Project involved the remediation of a PCB contaminated Navy facility by excavation, off-site disposal of contaminated soil and sediment, and restoration of the site, including wetlands. QA/QC duties included excavation control, documentation of excavation activities, and procurement of wetlands restoration subcontractor.

- Salem Acres Superfund Site, Salem, Massachusetts - Project consisted of the remediation of site soils that were contaminated with PAH and metals. Work tasks included excavation, post excavation and disposal sampling, and waste disposal. Duties included providing site QA/QC, scheduling, purchasing, cost tracking, invoicing, progress reports; and serving as the main point of contact with the client and the PRP.

- GATX, Meadville, Pennsylvania - Prepared site investigation plan and work plan for the remediation of a TPH contaminated site. Mr. Cintra also performed a site investigation to determine the extent of contamination.

- Sangamo Site, Pickens, South Carolina - Served as part of the team that prepared the bid for the remediation of a PCB contaminated site. Project involved the excavation and thermal treatment of contaminated material.

Information herein is proprietary and confidential and to be used or released to others only with explicit written permission of OHM Remediation Services Corp.

- ReSolve Superfund Site, North Dartmouth, Massachusetts - Project Engineer at this $20 million soil remediation project involving the excavation and low temperature thermal desorption (X*TRAX) of PCB contaminated soil. His principal responsibility was to ensure compliance with specifications, work plans, and regulations in the following areas:

  - Site Characterization and Geostatistical Mapping - Coordinated the soil sampling and geostatistical mapping programs to characterize the extent of contamination at the site.

  - Excavation Mapping/Planning & Surveying - Prepared field excavation maps and planned the excavation sequence; and supervised a 10-man crew which performed daily excavation, confirmatory sampling, and surveying activities.

  - Wetlands Delineation, Excavation, and Restoration - Coordinated subcontractors' activities in the delineation of the site wetlands according to local, state, and federal regulations; planned and supervised the excavation of the contaminated portions of the wetlands; and coordinated the restoration of the remediated wetlands.

  - Project Submittals - Prepared project work plans, progress reports, and close-out submittals.

  - Client and Agency Interaction - Communicated frequently with the client PRP group and their consultant, USEPA, MADEP, and local conservation commission through daily meetings with the on-site representatives, monthly progress meetings, and written correspondence.

- MKY Restoration Project, Byrum Township, New Jersey - Project Manager for the restoration of a three acre remediated site adjacent to wetlands. Responsible for contract administration, budget and cost tracking, design, submittals to client and agency, QA/QC, and work crew. Restoration activities included installation of retention wall and soil erosion/sediment control devices, backfilling, and seeding.

- JIS Landfill, Jamesburg, New Jersey - Project Manager for a project which involved the installation of a 300,000 gallon Modutank and piping for client to perform pump test on aquifer. Project also involved the disposal of groundwater collected in drums during previous pump tests. Performed management, administration, and QA/QC functions.

- CIL/ICI America, Sayerville, New Jersey - Project Manager on a project which involved the excavation and disposal of approximately 4,000 tons of PCB contaminated soil stockpiled and adjacent to active electrical transformer. Performed management, administration, and QA/QC functions.

Education

M.B.A. Operations/Production Management, Drexel University, 1990
Bachelor of Civil Engineering, Villanova University, 1986

Specialized Training

OSHA 29 CFR 1910.120 40-Hour Training
OSHA 29 CFR 1910.120 8-Hour Annual Refresher Training
OSHA 29 CFR 1910.120 Supervisory Training
OSHA 29 CFR 1926 Subpart P, Excavation (Competent Person) Training

Publications and Presentations

Gallagher, Mark, William J. Bamka, Edmundo E. Cintra, Carl Tammi, 1995, *The Use of Innovative Design Components for the Restoration of Palustrine Wetlands at a CERCLA Site in Massachusetts*, Society of Wetlands Scientists Annual Conference, Boston, Massachusetts.

Information herein is proprietary and confidential and to be used or released to others only with explicit written permission of OHM Remediation Services Corp.

Exhibit 2.4

September 19, 1997

Edmundo Cintra
OHM Remediation Services Corporation
200 Horizon Center Blvd.
Trenton, NJ 08691

RE: Site QC Manager
Groundwater Remediation
Q-Area Drum Storage Yard
Naval Base Norfolk
Contract N62470-93-D-3032
Delivery Order 073

Dear Mr. Cintra:

This letter will serve as your appointment as the Site Quality Control Manager on the referenced project and will also clarify your duties and authority in this position. In this position, you will be authorized to use available resources to satisfy all applicable requirements of the Program and Delivery Order Quality Control Plans.

This authorization specifically gives you the authority to direct removal and replacement or correction of nonconforming materials or work and stop work authority when continuation would be unsafe to personnel, harmful to the environment, or result in a significant degradation of quality.

You will be expected to work closely with the Project Manager, Site Supervisor and other project personnel, but you will not be directly responsible to anyone but myself for resolution of quality issues when working in the capacity of Quality Control Manager.

If you have any question in this matter, please call me at (617) 589-2306.

Sincerely,

Jimmie L.Whedbee
Program QC Manager
LANTDIV RAC Program

exh2_4

SUBMITTAL DESCRIPTIONS

SD-01, Data

Submittals that provide calculations, descriptions, descriptions, or other documentation regarding the work.

SD-02, Manufacturer's Catalog Data

Data composed of catalog cuts, brochures, circulars, specifications and product data, printed information in sufficient detail and scope to verify compliance with requirements of the contract documents. A type of product data.

SD-03, Manufacturer's Standard Color Charts

Preprinted illustrations displaying choices of color and finish for a material or product. A type of product data.

SD-04, Drawings

Submittals that graphically show relationship of various components of the work, schematic diagrams of systems detail of fabrications, layout of particular elements, connections, and other relational aspects of the work. A type so shop drawing.

SD-05, Design Data

Design calculations, mix design, analyses, or other data written in nature and pertaining to a part of the work. A type of shop drawings.

SD-06, Instructions

Preprinted material describing installation of a product, system, or material, including special notices and Material Safety Data Sheets, if any, concerning impedances, hazards, and safety precautions. A type of product data.

SD-07, Schedules

A tabular list of data or tabular list including location, features, or other pertinent information regarding products, materials, equipment, or components to be used in the work. A type of shop drawing

SD-08, Statements

A document, required of the Contractor, or through the Contractor by way of a supplier, installer, manufacturer, or other lower tier contractor, the purpose of which is to further the quality or orderly progression of a portion of the work by documenting procedures, acceptability of method or personnel, qualifications, or other verification of quality. A type of shop drawing.

SD-09, Reports

Reports of inspection and laboratory test, including analysis and interpretation of test results. Each report shall be properly identified. Test method used and compliance with recognized test standards shall be described.

SD-10, Test Reports

A report signed by an authorized official of a testing laboratory that a material, product, or system identical to the material, product or system to be provided has been tested in accordance with requirements specified by naming the test method and material. The test report must state the test was performed in accordance with the test requirements; state the test results; and indicate whether the material, product, or system has passed or failed the test. Testing must have been within three years of the date of Contract award. A type of product data.

SD-11, Factory Test Reports

A written report that includes the findings of a test required to be performed by the Contractor on an actual portion of the work or prototype prepared for this project before it is shipped to the job site. The report must be signed by an authorized official of a testing laboratory and must state the test was performed in accordance with the test requirements; state the test results; and indicate whether the material, product, or system has passed or failed the test. A type of shop drawing.

SD-12, Field Test Reports

A written report that includes the findings of a test made at the job site, in the vicinity of the job site, or on a sample taken from the job site, on a portion of the work, during or after installation. The report must be signed by an authorized official of a testing laboratory or agency and must state the test was performed in accordance with the test requirements; state the test results; and indicate whether the material, product, or system has passed or failed the test. A type of shop drawing.

SD-13, Certificates

Statements signed by responsible officials of a manufacturer of a product, system, or material attesting that the product, system, or material meet specified requirements. The statements must be dated after the award of this contract, name the project, and list the specific requirements that it is intended to address. A type of shop drawing.

SD-14, Samples

Samples, including both fabricated and unfabricated physical examples of materials, products, and units of work as complete units or as portions of units of work. A type of sample.

SD-15, Color Selection Samples

Samples of the available choice of colors, textures, and finishes of a product or material, presented over substrates identical in texture to that proposed for the work. A type of sample.

SD-16, Sample Panels

An assembly constructed at the product site in a location acceptable to the Contracting Officer and using materials and methods to be employed in the work; completely finished; maintained during construction; and removed at the conclusion of the work or when authorized by the Contracting Officer. A type of sample.

SD-17, Sample Installations

A portion of an assembly or material constructed where directed and, if approved, retained as a part of the work. A type of sample.

SD-18, Records

Documentation to ensure compliance with an administrative requirement or to establish and administrative mechanism. A type of administrative and close-out submittal,

SD-19, Operation and Maintenance Manuals

Data intended to be incorporated in an operations and maintenance manual. A type of administrative and close-out submittal.

Exhibit 3.2

List of Personnel Authorized to Review and Certify Submittals

Specification Section:	Submittal Type:	Authorized Personnel:

Contract Number: | Project Title: Groundwater Remediation at Q-Area Drum St

SPEC SECTION NO.	SD NO, AND TYPE OF SUBMITTAL MATERIAL OR PRODUCT	SPEC PARA NO.	CLASSIF/ APPR BY CO *	GOVT OR A/E REVIEWER	TRANS CONTROL NO.	PLANNED SUBMITTAL DATE
(a)	(b)	(c)	(d)	(e)	(f)	(g)
1) 01010	SD-09, Reports	1.2.1				
2)	Work Plan	1.2.1.1	G			
3) 01010	SD-18, Records	1.3.1				
4)	Shop Drawings	1.2.1.1				
5)	Record Documents/Drawings	1.3.1.1				
6)	Environmental Conditions Report	1.3.1.2				
7)	Network Analysis Diagram	1.3.1.3				
8)	Status Reports	1.3.1.3				
9)	QC Meeting Minutes	1.3.1.4				
10)	Test Results Summary Report	1.3.1.5				
11)	Contractor Production Report	1.3.1.6				
12)	QC Report	1.3.1.7				
13)	Rework Items List	1.3.1.8				
14)	Permits	1.3.1.9				
15)	Contractor's Closeout Report	1.3.1.10				
16) 01430	SD-12, Field Test Reports	1.2.2				
17)	Waste Characterization Sample	1.2.2.1				
18)	Analyses					
19) 02050	SD-08, Statements	1.3.1				
20)	Demolition Plan	1.3.1.1				

* Navy Notes:
Approved by:
G: NTR
Blank: CQC Manager

* NASA Notes:
Approved by:
Blank: Contracting Officer

* Army Notes:
Classification:
GA: Gov't Approval
FIO: For Information O

Contract Number: | Project Title: Groundwater Remediation at Q-Area Drum St

SPEC SECTION NO.	SD NO, AND TYPE OF SUBMITTAL MATERIAL OR PRODUCT	SPEC PARA NO.	CLASSIF/ APPR BY CO *	GOVT OR A/E REVIEWER	TRANS CONTROL NO.	PLANNED SUBMITTAI DATE
(a)	(b)	(c)	(d)	(e)	(f)	(g)
1) 02220	SD-12, Field Test Reports	1.3.1				
2)	Fill and backfill	3.9.2.1				
3)	Select material	3.9.2.2				
4)	Density tests	3.9.2.3				
5) 02222	SD-08, Statements	1.4.1				
6)	Excavation and Material	1.4.1.1	G			
7)	Handling Plan					
8)	Site Health and Safety Plan	1.4.1.2	G			
9)	Field Sampling and Laboratory	1.4.1.3	G			
10)	Testing Plan					
11) 02223	SD-18, Records	1.2.2				
12)	Waste Shipping Documentation	1.2.2.1				
13)	Waste Delivery Documentation	1.2.2.2				
14)	Disposal Site Decontamination	1.2.2.3				
15)	Verification					
16)	Work Site Decontamination	1.2.2.4				
17)	Verification					
18) 02571	SD-05, Design Data	1.2.1				
19)	Bituminous job mix formula	1.2.1.1				
20) 02661	SD-02, Manufacturer's Catalog Data	1.3.1				

* Navy Notes:
Approved by:
G: NTR
Blank: CQC Manager

* NASA Notes:
Approved by:
Blank: Contracting Officer

* Army Notes:
Classification:
GA: Gov't Approval
FIO: For Information O

Contract Number: | Project Title: Groundwater Remediation at Q-Area Drum Sto

SPEC SECTION NO.	SD NO, AND TYPE OF SUBMITTAL MATERIAL OR PRODUCT	SPEC PARA NO.	CLASSIF/ APPR BY CO *	GOVT OR A/E REVIEWER	TRANS CONTROL NO.	PLANNED SUBMITTAL DATE
(a)	(b)	(c)	(d)	(e)	(f)	(g)
1)	Water service line	2.1				
2)	Corporation stops	2.1.2.1				
3)	Valve boxes	2.1.2.5				
4)	Water meters	2.2				
5)	Backflow preventer	2.3				
6)	Anti-freeze device	2.3.1				
7) 02661	SD-06, Instructions	1.3.2				
8)	Installation	3.1.1				
9) 02902	SD-02, Manufacturer's Catalog Data	1.2.1				
10)	Piping and Fittings	2.1				
11)	Valves	2.1				
12)	System Control Panel	2.4.1	G			
13)	Air/Water Separators	2.4.2	G			
14)	Liquid Transfer Pumps	2.4.3	G			
15)	Carbon Adsorbers	2.4.4	G			
16)	Cartridge Filters	2.4.6	G			
17) 02902	SD-04, Drawings	1.2.2				
18)	Soil Vapor Extraction System	1.2.2.1	G			
19)	Wells and Piping					
20)	Soil Vapor Extraction Equipment	2.4	G			

* Navy Notes:
Approved by:
G: NTR
Blank: CQC Manager

* NASA Notes:
Approved by:
Blank: Contracting Officer

* Army Notes:
Classification:
GA: Gov't Approval
FIO: For Information O

Contract Number: | Project Title: Groundwater Remediation at Q-Area Drum Sto

SPEC SECTION NO.	SD NO, AND TYPE OF SUBMITTAL MATERIAL OR PRODUCT	SPEC PARA NO.	CLASSIF/ APPR BY CO *	GOVT OR A/E REVIEWER	TRANS CONTROL NO.	PLANNED SUBMITTAL DATE
(a)	(b)	(c)	(d)	(e)	(f)	(g)
1) 02902	SD-05, Design Data	1.2.3				
2)	Engineering Design Calculations	1.2.3.1	G			
3) 02902	SD-12, Field Test Reports	1.2.4				
4)	Soil Vapor Extraction	1.2.4.1				
5) 02902	SD-19, Operations and Maintenance	1.2.5				
6)	Soil Vapor Extraction Equipment	2.4	G			
7) 02903	SD-02, Manufacturer's Catalog Data	1.2.1				
8)	Piping and Fittings	2.1				
9)	Valves	2.1				
10)	Air Compressor	2.5.1	G			
11) 02903	SD-04, Drawings	1.2.2				
12)	Air Sparging System Wells and	1.2.2.1	G			
13)	Piping					
14)	Air Sparging Equipment	2.5	G			
15) 02903	SD-05, Design Data	1.2.3				
16)	Engineering Design Calculations	1.2.3.1	G			
17) 02903	SD-12, Field Test Reports	1.2.4				
18)	Air Sparging System Performance	1.2.4.1				
19)	Data					
20) 02903	SD-19, Operations and Maintenance	1.2.5				

* Navy Notes:
Approved by:
G: NTR
Blank: CQC Manager

* NASA Notes:
Approved by:
Blank: Contracting Officer

* Army Notes:
Classification:
GA: Gov't Approval
FIO: For Information O

Contract Number: | Project Title: Groundwater Remediation at Q-Area Drum Sto

SPEC SECTION NO.	SD NO, AND TYPE OF SUBMITTAL MATERIAL OR PRODUCT	SPEC PARA NO.	CLASSIF/ APPR BY CO *	GOVT OR A/E REVIEWER	TRANS CONTROL NO.	PLANNED SUBMITTAL DATE
(a)	(b)	(c)	(d)	(e)	(f)	(g)
1)	Air Sparging Equipment	2.5	G			
2) 04200	SD-02, Manufacturer's Catalog Data	1.2.1				
3)	Masonry accessories	2.3				
4)	Reinforcement	2.3.1				
5)	Flashing	2.3.5				
6) 04200	SD-04, Drawings	1.2.2				
7)	Reinforcing steel	1.2.2.1				
8) 04200	SD-06, Instructions	1.2.3				
9)	Masonry cement	2.2.3				
10) 04200	SD-11, Factory Test Reports	1.2.4				
11)	Efflorescence test	2.4.1				
12) 04200	SD-14, Samples	1.2.5				
13)	Masonry and stone units	1.4	G			
14) 05210	SD-04, Drawings	1.2.1				
15)	Steel joist structure	1.2.1.1				
16) 05210	SD-08, Statements	1.2.2				
17)	Welder qualification	1.2.2.1				
18) 05210	SD-12, Field Test Reports	1.2.3				
19)	Erection inspection	3.3.1				
20)	Welding inspections	3.3.1				

* Navy Notes:
Approved by:
G: NTR
Blank: CQC Manager

* NASA Notes:
Approved by:
Blank: Contracting Officer

* Army Notes:
Classification:
GA: Gov't Approval
FIO: For Information O

Contract Number: | Project Title: Groundwater Remediation at Q-Area Drum Stc

SPEC SECTION NO.	SD NO, AND TYPE OF SUBMITTAL MATERIAL OR PRODUCT	SPEC PARA NO.	CLASSIF/ APPR BY CO *	GOVT OR A/E REVIEWER	TRANS CONTROL NO.	PLANNED SUBMITTAI DATE
(a)	(b)	(c)	(d)	(e)	(f)	(g)
1) 05310	SD-02, Manufacturer's Catalog Data	1.2.1				
2)	Accessories	2.2				
3) 05310	SD-04, Drawings	1.2.2				
4)	Layout	1.2.2.1				
5) 05310	SD-05, Design Data	1.2.3				
6)	Deck units	2.3.1				
7) 05310	SD-08, Statements	1.2.4				
8)	Qualification of welders	1.3.2				
9) 05310	SD-13, Certificates	1.2.5				
10)	Fire safety	1.3.3.1				
11)	Wind storm resistance	1.3.3.2				
12) 05500	SD-13, Certificates	1.2.2				
13)	certificate	1.2.2.1				
14) 07160	SD-02, Manufacturer's Catalog Data	1.2.1				
15)	Asphalt	2.1				
16)	Asphalt primer	2.2				
17)	Fibrous asphalt	2.3				
18)	Saturated felt	2.4.1				
19) 07214	SD-02, Manufacturer's Catalog Data	1.2.1				
20)	Block or board insulation	2.1				

* Navy Notes:
Approved by:
G: NTR
Blank: CQC Manager

* NASA Notes:
Approved by:
Blank: Contracting Officer

* Army Notes:
Classification:
GA: Gov't Approval
FIO: For Information O

Contract Number: | Project Title: Groundwater Remediation at Q-Area Drum Sto

SPEC SECTION NO.	SD NO, AND TYPE OF SUBMITTAL MATERIAL OR PRODUCT	SPEC PARA NO.	CLASSIF/ APPR BY CO *	GOVT OR A/E REVIEWER	TRANS CONTROL NO.	PLANNED SUBMITTAL DATE
(a)	(b)	(c)	(d)	(e)	(f)	(g)
1)	Vapor retarder	2.1.6				
2)	Pressure sensitive tape	2.2				
3)	Protection board or coating	2.3				
4)	Accessories	2.4				
5) 07214	SD-06, Instructions	1.2.2				
6)	Block or Board Insulation	2.1				
7)	Adhesive	2.4.1				
8) 07220	SD-02, Manufacturer's Catalog Data	1.2.1				
9)	Fasteners	2.4				
10)	Insulation	2.1				
11) 07220	SD-04, Drawings	1.2.2				
12) 07220	SD-06, Instructions	1.2.3				
13)	Fasteners	2.4				
14)	insulation	2.1				
15) 07220	SD-10, Test Reports	1.2.4				
16)	Flame spread and smoke	1.3.1				
17)	developed ratings					
18) 07513	SD-02, Manufacturer's Catalog Data	1.2.1				
19)	Asphalt	2.2.1				
20)	Felts	2.2.2				

* Navy Notes:
Approved by:
G: NTR
Blank: CQC Manager

* NASA Notes:
Approved by:
Blank: Contracting Officer

* Army Notes:
Classification:
GA: Gov't Approval
FIO: For Information O

Contract Number: | Project Title: Groundwater Remediation at Q-Area Drum Sto

SPEC SECTION NO.	SD NO, AND TYPE OF SUBMITTAL MATERIAL OR PRODUCT	SPEC PARA NO.	CLASSIF/ APPR BY CO *	GOVT OR A/E REVIEWER	TRANS CONTROL NO.	PLANNED SUBMITTAI DATE
(a)	(b)	(c)	(d)	(e)	(f)	(g)
1)	Fasteners	2.2.6				
2)	Primer	2.2.3				
3)	Asphalt roof cement	2.2.4				
4)	Moisture release vents	2.2.8				
5)	Warranty	1.2.1.1				
6) 07513	SD-06, Instructions	1.2.2				
7)	Asphalt	2.2.1				
8)	Felts	2.2.2				
9)	Primer	2.2.3				
10)	Asphalt roof cement	2.2.4				
11) 07513	SD-08, Statements	1.2.3				
12)	Bill of lading	1.4.1				
13)	Qualifications of Applicator	1.3.1				
14) 07513	SD-12, Field Test Reports	1.2.4				
15)	Samples of built-up roofing	3.4.2				
16) 07513	SD-18, Records	1.2.5				
17)	Information card	3.5				
18) 07600	SD-04, Drawings	1.2.1				
19)	Base flashing	3.1.8				
20)	Counterflashing	3.1.9				

* Navy Notes:
Approved by:
G: NTR
Blank: CQC Manager

* NASA Notes:
Approved by:
Blank: Contracting Officer

* Army Notes:
Classification:
GA: Gov't Approval
FIO: For Information O

Contract Number: | Project Title: Groundwater Remediation at Q-Area Drum Stc

SPEC SECTION NO.	SD NO, AND TYPE OF SUBMITTAL MATERIAL OR PRODUCT	SPEC PARA NO.	CLASSIF/ APPR BY CO *	GOVT OR A/E REVIEWER	TRANS CONTROL NO.	PLANNED SUBMITTAI DATE
(a)	(b)	(c)	(d)	(e)	(f)	(g)
1)	Flashing at roof penetrations	3.1.15				
2)	Scuppers	3.1.12				
3) 07600	SD-18, Records	1.2.2				
4) 07920	SD-02, Manufacturer's Catalog Data	1.2.1				
5)	Sealants	2.1	G			
6)	Primers	2.2				
7)	Bond breakers	2.3				
8)	Backstops	2.4				
9) 08110	SD-02, Manufacturer's Catalog Data	1.2.1				
10)	Doors	2.1				
11)	Frames	2.4				
12)	Weatherstripping	2.5				
13) 08110	SD-03, Manufacturer's Standard Col	1.2.2				
14) 08110	SD-04, Drawings	1.2.3				
15)	Doors	2.1	G			
16)	Frames	2.4				
17)	Accessories	2.2				
18) 08110	SD-07, Schedules	1.2.4				
19)	Doors	2.1	G			
20)	Frames	2.4				

* Navy Notes:
Approved by:
G: NTR
Blank: CQC Manager

* NASA Notes:
Approved by:
Blank: Contracting Officer

* Army Notes:
Classification:
GA: Gov't Approval
FIO: For Information O

Contract Number: | Project Title: Groundwater Remediation at Q-Area Drum St

SPEC SECTION NO.	SD NO, AND TYPE OF SUBMITTAL MATERIAL OR PRODUCT	SPEC PARA NO.	CLASSIF/ APPR BY CO *	GOVT OR A/E REVIEWER	TRANS CONTROL NO.	PLANNED SUBMITTA DATE
(a)	(b)	(c)	(d)	(e)	(f)	(g)
1) 08710	SD-02, Manufacturer's Catalog Data	1.2.1				
2)	Hardware items	2.3	G			
3) 08710	SD-06, Instructions	1.2.2				
4)	Installation	3.1				
5) 08710	SD-07, Schedules	1.2.3				
6)	Hardware schedule	1.2.3.1	G			
7)	Keying system	2.3.4				
8) 08710	SD-18, Records	1.2.4				
9) 08710	SD-19, Operation and Maintenance M	1.2.5				
10)	Hardware Schedule	1.2.3.1				
11) 09900	SD-02, Manufacturers Catalog Data	1.2.1				
12)	Coating	1.2.1.1	G			
13)	Sealant	1.2.1.1				
14) 09900	SD-06, Instructions	1.2.2				
15)	Application instructions	3.2				
16)	Manufacturer's material safety	1.6.2				
17)	data sheets					
18) 09900	SD-07, Schedules	1.2.3				
19)	Piping identification	3.6				
20) 09900	SD-08, Statements	1.2.4				

* Navy Notes:
Approved by:
G: NTR
Blank: CQC Manager

* NASA Notes:
Approved by:
Blank: Contracting Officer

* Army Notes:
Classification:
GA: Gov't Approval
FIO: For Information O

Contract Number: | Project Title: Groundwater Remediation at Q-Area Drum Sto

SPEC SECTION NO.	SD NO, AND TYPE OF SUBMITTAL MATERIAL OR PRODUCT	SPEC PARA NO.	CLASSIF/ APPR BY CO *	GOVT OR A/E REVIEWER	TRANS CONTROL NO.	PLANNED SUBMITTAL DATE
(a)	(b)	(c)	(d)	(e)	(f)	(g)
1)	Applicator's qualifications	1.2.4.1				
2)	Evidence of acceptable variation	1.2.4.2	G			
3) 09900	SD-14, Samples	1.2.5				
4)	Color	1.8	G			
5) 10201	SD-03, Manufacturer's Standard Col	1.2.1				
6)	Wall louvers	2.2	G			
7) 10201	SD-04, Drawings	1.2.2				
8)	Wall louvers	2.2	G			
) 15054	SD-02, Manufacturer's Catalog Data	1.3.1				
10)	Air compressor	2.2	G			
11)	Inlet air filters	2.2.10				
12)	Line silencer	2.2.11				
13)	Air flow rate and pressure	2.3				
14)	recorder					
15)	Filter housing	2.2.9.2				
16) 15054	SD-04, Drawings	1.3.2				
17)	Air compressor system	1.3.2.1	G			
18) 15054	SD-08, Statements	1.3.3				
19)	Work plan	1.3.3.1				
20)	Factory test procedures	2.4.1	G			

* Navy Notes:
Approved by:
G: NTR
Blank: CQC Manager

* NASA Notes:
Approved by:
Blank: Contracting Officer

* Army Notes:
Classification:
GA: Gov't Approval
FIO: For Information Or

Contract Number: | Project Title: Groundwater Remediation at Q-Area Drum St

SPEC SECTION NO.	SD NO, AND TYPE OF SUBMITTAL MATERIAL OR PRODUCT	SPEC PARA NO.	CLASSIF/ APPR BY CO *	GOVT OR A/E REVIEWER	TRANS CONTROL NO.	PLANNED SUBMITTAL DATE
(a)	(b)	(c)	(d)	(e)	(f)	(g)
1)	Factory testing certification	1.3.3.2				
2)	Qualifications of field	1.3.3.3				
3)	supervisors					
4)	Field test procedures	3.3.1				
5)	Training material	1.3.3.4				
6) 15054	SD-11, Factory Test Reports	1.3.4				
7)	performance tests	2.4.1				
8)	Sound level and run-in tests	2.4.1				
9) 15054	SD-12, Field Test Reports	1.3.5				
10)	Air compressor performance tests	3.3.1.1				
11)	Instrumentation test	3.3.1.2				
12)	Sound level tests	3.3.1.3				
13)	Air compressor system test	3.3.1				
14) 15054	SD-13, Certificates	1.3.6				
15)	Air compressor system	1.3.2.1				
16)	system installation	1.3.6.1				
17) 15054	SD-18, Records	1.3.7				
18)	Posted operating instructions	1.10				
19) 15054	SD-19, Operation and Maintenance M	1.3.8				
20)	Air compressor system	1.3.2.1	G			

* Navy Notes:
Approved by:
G: NTR
Blank: CQC Manager

* NASA Notes:
Approved by:
Blank: Contracting Officer

* Army Notes:
Classification:
GA: Gov't Approval
FIO: For Information O

Contract Number: | Project Title: Groundwater Remediation at Q-Area Drum Sto

SPEC SECTION NO.	SD NO, AND TYPE OF SUBMITTAL MATERIAL OR PRODUCT	SPEC PARA NO.	CLASSIF/ APPR BY CO *	GOVT OR A/E REVIEWER	TRANS CONTROL NO.	PLANNED SUBMITTAL DATE
(a)	(b)	(c)	(d)	(e)	(f)	(g)
1) 15055	SD-02, Manufacturer's Catalog Data	1.3.1				
2)	Vacuum Pump	2.2	G			
3)	Inlet air filter	2.2.5.4				
4)	Line silencer	2.2.10				
5)	Air flow rate and pressure	2.3				
6)	recorder					
7)	Filter housing	2.2.9.2				
8) 15055	SD-04, Drawings	1.3.2				
9)	Vacuum pump system	1.3.2.1	G			
10) 15055	SD-08, Statements	1.3.3				
11)	Work plan	1.3.3.1				
12)	Factory test procedures	2.4.1	G			
13)	Factory testing certification	1.3.3.2				
14)	Qualifications of field	1.3.3.3				
15)	supervisors					
16)	Field test procedures	3.3.1				
17)	Training material	1.3.3.4				
18) 15055	SD-11, Factory Test Reports	1.3.4				
19)	performance tests	2.4.1				
20)	Sound level and run-in tests	2.4.1				

* Navy Notes:
Approved by:
G: NTR
Blank: CQC Manager

* NASA Notes:
Approved by:
Blank: Contracting Officer

* Army Notes:
Classification:
GA: Gov't Approval
FIO: For Information C

Contract Number: | Project Title: Groundwater Remediation at Q-Area Drum St

SPEC SECTION NO.	SD NO, AND TYPE OF SUBMITTAL MATERIAL OR PRODUCT	SPEC PARA NO.	CLASSIF/ APPR BY CO *	GOVT OR A/E REVIEWER	TRANS CONTROL NO.	PLANNED SUBMITTAI DATE
(a)	(b)	(c)	(d)	(e)	(f)	(g)
1) 15055	SD-12, Field Test Reports	1.3.5				
2)	Vacuum pump performance tests	3.3.1.1				
3)	Instrumentation test	3.3.1.2				
4)	Sound level tests	3.3.1.3				
5)	Vacuum pump system test	3.3.1				
6) 15055	SD-13, Certificates	1.3.6				
7)	Vacuum pump system	1.3.2.1				
8)	system installation	1.3.6.1				
9) 15055	SD-18, Records	1.3.7				
10)	Posted operating instructions	1.10				
11) 15055	SD-19, Operation and Maintenance M	1.3.8				
12)	Vacuum pump system	1.3.2.1	G			
13) 15400	SD-02, Manufacturer's Catalog Data	1.4.1				
14)	Pipe and fittings	2.1				
15)	Valves	2.2.2				
16)	Floor Drain/Separators	2.1.4.1				
17) 15501	SD-02, Manufacturer's Catalog Data	1.3.1				
18)	Unit heaters	2.1.1	G			
19)	Exhaust fans	2.1.2	G			
20) 15501	SD-06, Instructions	1.3.2				

* Navy Notes:
Approved by:
G: NTR
Blank: CQC Manager

* NASA Notes:
Approved by:
Blank: Contracting Officer

* Army Notes:
Classification:
GA: Gov't Approval
FIO: For Information O

Contract Number: | Project Title: Groundwater Remediation at Q-Area Drum St

SPEC SECTION NO.	SD NO, AND TYPE OF SUBMITTAL MATERIAL OR PRODUCT	SPEC PARA NO.	CLASSIF/ APPR BY CO *	GOVT OR A/E REVIEWER	TRANS CONTROL NO.	PLANNED SUBMITTAL DATE
(a)	(b)	(c)	(d)	(e)	(f)	(g)
1)	Installation manual	1.3.2.1				
2) 15501	SD-19, Operation and Maintenance M	1.3.3				
3)	Unit heaters	2.1.1				
4)	Exhaust fans	2.1.2				
5) 15971	SD-02, Manufacturers Catalog Data	1.4.1				
6)	Actuators	2.2	G			
7)	Thermostats	2.3	G			
8)	End switches	2.4	G			
9) 15971	SD-04, Drawings	1.4.2				
10)	Control system diagram	1.4.2.1	G			
11)	Ladder diagram	1.4.2.2	G			
12)	Sequence of operation	1.4.2.4	G			
13)	Arrangement drawing	1.4.2.5	G			
14)	Wiring diagram	1.4.2.3	G			
15) 15971	SD-18, Records	1.4.3				
16)	Training course documentation	3.4.1	G			
17)	Qualified service organization	3.5	G			
18)	list					
19) 15971	SD-19, Operation and Maintenance M	1.4.4				
20)	Space temperature control system	1.4.4.1	G			

* Navy Notes:
Approved by:
G: NTR
Blank: CQC Manager

* NASA Notes:
Approved by:
Blank: Contracting Officer

* Army Notes:
Classification:
GA: Gov't Approval
FIO: For Information O

Contract Number: | Project Title: Groundwater Remediation at Q-Area Drum St

SPEC SECTION NO.	SD NO, AND TYPE OF SUBMITTAL MATERIAL OR PRODUCT	SPEC PARA NO.	CLASSIF/ APPR BY CO *	GOVT OR A/E REVIEWER	TRANS CONTROL NO.	PLANNED SUBMITTA DATE
(a)	(b)	(c)	(d)	(e)	(f)	(g)
1) 16301	SD-02, Manufacturer's Catalog Data	1.4.1				
2)	Medium voltage cable	2.1.3	G			
3)	Medium voltage cable	2.1.4	G			
4)	terminations					
5)	Medium voltage cable joints	2.1.5	G			
6) 16301	SD-08, Statements	1.4.1				
7)	Cable splicer qualifications	1.4.1.1	G			
8) 16301	SD-09, Reports	1.4.2				
9)	Arc-proofing test	1.4.2.1	G			
10)	Medium voltage cable	1.4.2.2	G			
11)	qualification and production tests					
12) 16301	SD-12, Field Test Reports	1.4.3				
13)	Acceptance Checks and Tests	3.2.1	G			
14) 16402	SD-02, Manufacturer's Catalog Data	1.3.1				
15)	Switches	2.7	G			
16)	Receptacles	2.8	G			
17)	Circuit breakers	2.9.2	G			
18)	Transformers	2.12	G			
19)	Motor controllers	2.14	G			
20)	Telecommunications cabling	2.15.6	G			

* Navy Notes:
Approved by:
G: NTR
Blank: CQC Manager

* NASA Notes:
Approved by:
Blank: Contracting Officer

* Army Notes:
Classification:
GA: Gov't Approval
FIO: For Information O

Contract Number: | Project Title: Groundwater Remediation at Q-Area Drum St

SPEC SECTION NO.	SD NO, AND TYPE OF SUBMITTAL MATERIAL OR PRODUCT	SPEC PARA NO.	CLASSIF/ APPR BY CO *	GOVT OR A/E REVIEWER	TRANS CONTROL NO.	PLANNED SUBMITTAI DATE
(a)	(b)	(c)	(d)	(e)	(f)	(g)
1)	Building protector assemblies	2.15.7	G			
2)	Telephone dialer	2.15.8	G			
3) 16402	SD-04, Drawings	1.3.2				
4)	Panelboards	2.9	G			
5)	Transformers	2.12	G			
6) 16402	SD-08, Statements	1.3.3				
7)	Fuses	2.11	G			
8) 16402	SD-09, Reports	1.3.3.1				
9)	Transformer design and	1.3.3.2	G			
10)	prototype tests					
11) 16402	SD-12, Field Test Reports	1.3.4				
12)	600-volt wiring test	3.2.2	G			
13)	Grounding system test	3.2.6	G			
14)	Transformer tests	3.2.3	G			
15)	GFI receptacle test	3.2.4	G			
16) 16402	SD-19, Operation and Maintenance M	1.3.5				
17)	Electrical Systems	1.3.5.1				
18) 16462	SD-01, Data	1.3.1				
19)	Tested transformer losses	2.2.2.2	G			
20)	Transformer loss	2.2.2.1	G			

* Navy Notes:
Approved by:
G: NTR
Blank: CQC Manager

* NASA Notes:
Approved by:
Blank: Contracting Officer

* Army Notes:
Classification:
GA: Gov't Approval
FIO: For Information O

Contract Number: | Project Title: Groundwater Remediation at Q-Area Drum St

SPEC SECTION NO.	SD NO, AND TYPE OF SUBMITTAL MATERIAL OR PRODUCT	SPEC PARA NO.	CLASSIF/ APPR BY CO *	GOVT OR A/E REVIEWER	TRANS CONTROL NO.	PLANNED SUBMITTAL DATE
(a)	(b)	(c)	(d)	(e)	(f)	(g)
1) 16462	SD-02, Manufacturer's Catalog Data	1.3.2				
2)	Pad-mounted transformers,	2.2	G			
3)	dead-front					
4) 16462	SD-04, Drawings	1.3.3				
5)	Pad-mounted transformer drawings	1.3.3.1	G			
6) 16462	SD-11, Factory Tests	1.3.4				
7)	design tests	1.3.4.1	G			
8)	routine and other tests	1.3.4.2	G			
9) 16462	SD-12, Field Test Reports	1.3.5				
10)	acceptance checks and tests	3.5.1	G			
11)	Ground resistance test reports	1.3.5.1	G			
12) 16462	SD-18, Records	1.3.6				
13)	Transformer test schedule	1.3.6.1	G			
14) 16462	SD-19, Operation and Maintenance M	1.3.7				
15)	Pad-mounted transformers,	2.2	G			
16)	dead-front					
17) 16510	SD-02, Manufacturer's Catalog Data	1.4.1				
18)	Fluorescent lighting fixtures	2.1	G			
19)	Fluorescent electronic ballasts	2.1.1	G			
20)	Fluorescent lamps	2.1.2	G			

* Navy Notes:
Approved by:
G: NTR
Blank: CQC Manager

* NASA Notes:
Approved by:
Blank: Contracting Officer

* Army Notes:
Classification:
GA: Gov't Approval
FIO: For Information On

Contract Number: | Project Title: Groundwater Remediation at Q-Area Drum Sto

SPEC SECTION NO.	SD NO, AND TYPE OF SUBMITTAL MATERIAL OR PRODUCT	SPEC PARA NO.	CLASSIF/ APPR BY CO *	GOVT OR A/E REVIEWER	TRANS CONTROL NO.	PLANNED SUBMITTAL DATE
(a)	(b)	(c)	(d)	(e)	(f)	(g)
1)	High-intensity-discharge (HID)	2.2	G			
2)	lighting fixtures					
3)	HID ballasts	2.2.1	G			
4)	High-pressure sodium (HPS) lamps	2.2.2	G			
5)	Photocell switch	2.4	G			
6) 16510	SD-08, Statements	1.4.2				
7)	Qualification of manufacturer	1.5.1	G			
8) 16510	SD-12, Field Test Reports	1.4.3				
9)	Operating test	3.2				
10) 16510	SD-18, Records	1.4.4				
11)	Information card	1.4.4.1	G			

* Navy Notes:
Approved by:
G: NTR
Blank: CQC Manager

* NASA Notes:
Approved by:
Blank: Contracting Officer

* Army Notes:
Classification:
GA: Gov't Approval
FIO: For Information O

Exhibit 5.1

TESTING PLAN AND LOG

Contract Number			Project Title and Location							Contractor	
Specification Section and Paragraph Number	Item of Work	Test Required	Accredited/ Approved Lab		Sampled By	Tested By	Location of Test		Date Completed	Date Forwarded to Contr. Off.	Remarks
			Yes	No			On Site	Off Site			

Exhibit 6.1

REWORK ITEMS LIST

Contract No. and Title: _____

Contractor: _____

Number	Date Identified	Description	Contract Requirement (Spec. Section and Par. No., Drawing No. And Detail No., etc.)	Action Taken by QC Manager	Resolution	Date Completed

SAMPLE DOCUMENT

COORDINATION AND MUTUAL UNDERSTANDING MEETING AGENDA
FOR
DELIVERY ORDER No. _____
_____ AT THE
U.S. NAVAL STATION,
_____
____ __, 1996

The purpose of this meeting is to develop a mutual understanding of the QC details, including forms to be used; administration of on-site and off-site work, and coordination of the Contractor's management, production and the QC Manager's duties with the Contracting Officer.

The QC program consists of a QC Organization, QC Manager, a QC Plan for this Delivery Order, this Coordination and Mutual Understanding Meeting, QC meetings, three phases of control, submittal review, submittal approval except for submittals designated for Contracting Officer approval, testing, and QC certifications and documentation necessary to provide materials, equipment, workmanship, fabrication, construction and operations which comply with requirements of this contract.

Project QC Manager duties (contract para. 6.6.1)

- Attend this meeting
- Conduct the QC Meetings
- Perform the three phases of control
- Perform submittal review
- Perform submittal approval
- Ensure testing is performed
- Prepare QC certifications and documentation
- Perform other activities when approved by the Contracting Officer

SAMPLE DOCUMENT

Submittal Reviewers Duties and Qualifications (contract para. 6.7)

- Provide submittal reviewers qualified in the disciplines being reviewed other than the QC Manager, to review and certify that the submittals meet the requirements of the contract.

QC Plan (contract para. 6.8)

- (as specified therein)

Coordination and Mutual Understanding Meeting (contract para. 6.9)

- (see purpose above)

QC meetings (contract para. 6.10)

- The QC Manager shall conduct QC meetings once every two weeks or as otherwise directed by the Contracting Officer.
- Meeting minutes to be prepared by the QC Manager in accordance with the contract outline and a copy provided to the Contracting Officer within two working days of the meeting.
- A copy will be distributed to the Program QC Manager.

Three phases of control (contract para. 6.11)

- Preparatory Phase Meeting
- Initial Phase Meeting
- Follow-Up Phase Inspection

Submittal review and approval (contract para. 6.12 and Part 7.0, "Submittals")

- Review
- Approval
- Certification
- Submittal Register

SAMPLE DOCUMENT

Testing (contract para. 6.13)

- Testing Laboratory Requirements
- Accredited Laboratories
- Inspection and Testing Laboratories
- Capability Checks
- Test Results

QC certifications (contract para. 6.14)

- Contractor Quality Control Report Certification
- Invoice Certification
- Completion certification

Documentation (contract para. 6.15)

- Contractor Production Report
- Contractor Quality Control Report
- Testing Plan and Log
- Rework Items List
- As-Built Records
- Report Forms

    1. Contractor Production Report
    2. Contractor Quality Control Report
    3. Testing Plan and Log
    4. Rework Items List

Exhibit 8.0

INSPECTION SCHEDULE
For
Groundwater Remediation
Q-Area Drum Storage Yard
Naval Base Norfolk
Delivery Order No. 073

Spec. Section	Activity	Preparatory Report No.	Initial Report No.	Follow-up Report No.
01010	Erosion and Sediment Control • Materials meet specifications: - Haybales, Silt fence, Riprap • Alignment • Proper installation • Alignment and location • Proper maintenance and ongoing inspection			
01010	Temporary Decontamination Pad • Materials meet specification requirements • Location defined • Proper installation • Proper grades • Decontamination liquids recovered • Area restored			
01430	Waste Sampling Requirements • Sampling and laboratory procedures established • Quality control of sampling and analysis procedures • Chain of custody • Sampling documentation			

INSPECTION SCHEDULE
(CONTINUED)

Spec. Section	Activity	Preparatory Report No.	Initial Report No.	Follow-up Report No.
02050	Demolition and Removal • Dust and debris control established • Traffic control signs established • Existing work to remain in-place protected • Limits of work established • Existing facilities to be removed - Utilities and related equipment; paving and slabs; patching • Disposition of material • Monitoring for spillage of debris during loading and transportation • Proper disposal of debris and rubbish			
02220	Borrow Material • Sampling and analysis • Geotechnical properties • Conformance with test data • Dust control • Ongoing			
02220	Topsoil and Seeding Site Restoration • Proper mixture • Meets specification • Topsoil composition tests • Topsoil thickness • Limits of placement/planting • Seeding per specification requirements • Backfilling/watering plants/shrubs per specification • Sufficient growth • Proper placement			

INSPECTION SCHEDULE
(CONTINUED)

Spec. Section	Activity	Preparatory Report No.	Initial Report No.	Follow-up Report No.
02220 02222	Excavation, Filling, and Backfilling • Initial limits of area and depth defined • Alignment, limits, and grades • Sampling and laboratory procedures established • Filling/backfilling materials meet specification • Survey control • Visual inspection of excavation • Field screening of excavation • Dust control • Chain of custody • Field QC testing of fill material • Compacting between layers • Verification of sampling • Data inspection/evaluation • Grades • Density testing • Material thickness daily logs maintained			
02222	Confirmation Sampling and Analysis • Sampling and laboratory procedures established • Quality control of sampling and analysis procedures • Chain of custody • Sampling documentation • Data inspection/evaluation			
02223	Transportation and Disposal of Contaminated Material • Specified trucks being utilized • Permits obtained as required • Monitoring for spillage during loading and transportation • Proper maintenance and ongoing inspection of analyzed samples			

INSPECTION SCHEDULE
(CONTINUED)

Spec. Section	Activity	Preparatory Report No.	Initial Report No.	Follow-up Report No.
02522	Soil Vapor Extraction and Air Sparge Wells • Limits of work established • Materials meet specification requirements • Sampling and laboratory procedures established • Test hole drilled and data analyzed • Yield tests performed • Quality control of sampling and analysis procedures • Chain of custody • Well plumbness and alignment test • Drill cuttings recovered and staged/disposed • Data inspection/evaluation • Boring logs maintained			
02571	Pavement Removal and Replacement • Limits of work established • Designated pavement removed • Site grade/contours maintained • Remove material from site, as required for disposal • Subgrade in-place • Mix design approval for replacement • Material meets specification requirements • Limits and placement of bituminous concrete established • Curing and protection are performed as specified • On-going field quality control tests			
02661	Exterior Water Distribution System • Material meets specification requirements • Proper delivery, storage, and handling • Location of water lines established • Proper installation of water service piping - Location; service line connections to water main; special requirements for installation of plastic piping • Perform disinfection • Proper installation of backflow preventer • Field quality control - Field test inspections; testing procedure; special testing requirements			

INSPECTION SCHEDULE
(CONTINUED)

Spec. Section	Activity	Preparatory Report No.	Initial Report No.	Follow-up Report No.
02821	Chain-link Fences and Gates • Materials meet specification: - fabric, posts, braces, framing, rails, tension wires, gates, and hooks • Installation meets specification requirements • As-built condition meets specification requirements			
02902	Procurement Quality Assurance - Soil Vapor Extraction System • Drawing approvals obtained where required • Procedure submittal as required • Certificates of compliance obtained, as required • Material meets specification requirements • Equipment fabricated to arrangement drawings and bill of material list • Cleaning and surface prep prior to applying finish • Proper installation • Finish as specified by specification • Final equipment assembly/configuration			
	Procurement Quality Assurance - Offgas Carbon Adsorption System • Drawing approvals obtained where required • Procedure submittal as required • Certificates of compliance obtained, as required • Material meets specification requirements • Equipment fabricated to arrangement drawings and bill of material list • Cleaning and surface prep prior to applying finish • Proper installation • Finish as specified by specification • Final equipment assembly/configuration			
02903	Procurement Quality Assurance - Air Sparge System • Drawing approvals obtained where required • Procedure submittal as required • Certificates of compliance obtained, as required • Material meets specification requirements • Equipment fabricated to arrangement drawings and bill of material list • Cleaning and surface prep prior to applying finish • Proper installation • Finish as specified by specification • Final equipment assembly/configuration			

INSPECTION SCHEDULE
(CONTINUED)

Spec. Section	Activity	Preparatory Report No.	Initial Report No.	Follow-up Report No.
03302	Cast-in-Place Concrete • Mix design approval • Material meets specification requirements • Limits and placement of concrete established • Placement of reinforcement established • Sampling and testing as specified • Formwork per specifications • Concrete placement as specified • Surface finishes are as specified • Field quality control tests: - Slump tests, Temperature test, Compressive strength test, Air content • Curing and protection are performed as specified • Data inspection/evaluation • Ongoing field quality control tests			
15054	Procurement Quality Assurance - Nonlubricated Rotary Screw Air Compressors (100 hp and larger) • Drawing approvals obtained where required • Procedure submittal as required • Certificates of compliance obtained as required • Material meets specification requirements • Equipment fabricated to arrangement drawings and bill of material list • Proper installation • Final equipment assembly/configuration • Field quality control - Field test procedures; air compressor performance tests; instrumentation tests; sound level tests; operational deficiencies; testing tolerances • Testing procedure approved			

INSPECTION SCHEDULE
(CONTINUED)

Spec. Section	Activity	Preparatory Report No.	Initial Report No.	Follow-up Report No.
15055	Procurement Quality Assurance - Nonlubricated Rotary Screw Vacuum Pumps • Drawing approvals obtained where required • Procedure submittal as required • Certificates of complaince obtained as required • Material meets specification requirements • Equipment fabricated to arrangement drawings and bill of material list • Proper installation • Final equipment assembly/configuration • Field quality control - Field test procedures; vacuum pump performance tests; instrumentation test; sound level tests; operational deficiencies; testing tolerances • Testing procedure approved			

INSPECTION SCHEDULE
(CONTINUED)

Spec. Section	Activity	Preparatory Report No.	Initial Report No.	Follow-up Report No.
16011 16301 16402 16462	Electrical General Requirements: • Medium voltage cable • Underground electrical conduits • Transformers (incl. Pad mounted) • Load Centers • Electrical Accessories (switches, circuit breakers, receptacles, etc.) • Limits of work established • Materials meet specification requirements • Drawing submitted and approved as required • Test data, required by specification, is available from manufacturer for shop testing. This includes mechanical and electrical tests. • Material/equipment checked for damage prior to installation • Cable splicer certifications • Proper installation • Anchoring devices per specification requirements • Configuration meets specification and drawing requirements • Cable/wire separation is as specified in specification • Marking is as specified: - Equipment, Cable ends, Warning signs, Size and location • Finishes are as specified • Equipment and system grounding are as specified • Cable connections/terminations shall be as specified • Field quality control: - 600 V wiring test, Transformer test, Grounding system test, GFI receptacle test, Ground rod tests, High voltage cable test • Conduit is as specified • Cable pulling shall comply with specification • Ongoing field inspection • Field testing underground electrical work: - Medium voltage cable, Splicing new cables into existing cable • Field testing pad mounted transformers: - Performance of acceptance checks and tests, Follow up verification test • Data inspection/evaluation			

CONTRACTOR QUALITY CONTROL REPORT

(ATTACH ADDITIONAL SHEETS IF NECESSARY)

DATE

PHASE	(BLANK NOT APPLICABLE)	YES	NO	IDENTIFY SPECIFICATION SECTION, DEFINABLE FEATURE OF WORK, LOCATION AND LIST PERSONNEL PRESENT
PREPARATORY	PLANS AND SPECS HAVE BEEN REVIEWED	☐	☐	
	THE SUBMITTALS HAVE BEEN APPROVED.	☐	☐	
	MATERIALS COMPLY WITH APPROVED SUBMITTALS	☐	☐	
	MATERIALS STORED PROPERLY.	☐	☐	
	PRELIMINARY WORK WAS DONE CORRECTLY.	☐	☐	
	TESTING PLAN HAS BEEN REVIEWED.	☐	☐	
	WORK METHOD AND SCHEDULE DISCUSSED.	☐	☐	
	JOB SAFETY / HAZARD ANALYSIS ADDRESSED	☐	☐	
INITIAL	PRELIMINARY WORK WAS DONE CORRECTLY	☐	☐	
	SAMPLE HAS BEEN PREPARED/APPROVED	☐	☐	
	WORKMANSHIP IS SATISFACTORY	☐	☐	
	TEST RESULTS ARE ACCEPTABLE.	☐	☐	
	WORK IS IN COMPLIANCE WITH THE CONTRACT.	☐	☐	
	WORK COMPIES WITH SAFETY REQUIREMENTS	☐	☐	
FOLLOW-UP	WORK COMPLIES WITH CONTRACT AS APPROVED INITIAL PHASE	☐	☐	
	WORK COMPIES WITH SAFETY REQUIREMENTS	☐	☐	

Exhibit 8.1
Page 1 of 3

TESTING PERFORMED & WHO PERFORMED TEST

TESTING PERFORMED & WHO PERFORMED TEST

REWORK ITEMS IDENTIFIED TODAY (NOT CORRECTED BY CLOSE OF BUSINESS)

REWORK ITEMS CORRECTED TODAY (FROM REWORK ITEMS LIST)

REMARKS

On behalf of the contractor, I certify that this report is completed and correct and equipment and material used and work performed during this reporting period is in compliance with the contract drawings and specifications to the best of my knowledge except as noted in this report.

AUTHORIZED QC MANAGER AT SITE DATE

GOVERNMENT QUALITY ASSURANCE REPORT

DATE

QUALITY ASSURANCE REPRESENTATIVE'S REMARKS AND/OR EXCEPTIONS TO THE REPORT

GOVERNMENT QUALITY ASSURANCE MANAGER DATE

CONTRACTOR QUALITY CONTROL REPORT CONTINUATION SHEET

(ATTACH ADDITIONAL SHEETS IF NECESSARY)

DATE

PHASE	(BLANK NOT APPLICABLE)	YES	NO	IDENTIFY SPECIFICATION SECTION, DEFINABLE FEATURE OF WORK, LOCATION AND LIST PERSONNEL PRESENT
PREPARATORY	PLANS AND SPECS HAVE BEEN REVIEWED	☐	☐	
	THE SUBMITTALS HAVE BEEN APPROVED.	☐	☐	
	MATERIALS COMPLY WITH APPROVED SUBMITTALS	☐	☐	
	MATERIALS STORED PROPERLY.	☐	☐	
	PRELIMINARY WORK WAS DONE CORRECTLY.	☐	☐	
	TESTING PLAN HAS BEEN REVIEWED.	☐	☐	
	WORK METHOD AND SCHEDULE DISCUSSED.	☐	☐	
	JOB SAFETY / HAZARD ANALYSIS ADDRESSED	☐	☐	

Exhibit 8.1
Page 2 of 3

PHASE		YES	NO		TESTING PERFORMED & WHO PERFORMED TEST
INITIAL	PRELIMINARY WORK WAS DONE CORRECTLY	☐	☐		
	SAMPLE HAS BEEN PREPARED/APPROVED	☐	☐		
	WORKMANSHIP IS SATISFACTORY	☐	☐		
	TEST RESULTS ARE ACCEPTABLE.	☐	☐		
	WORK IS IN COMPLIANCE WITH THE CONTRACT.	☐	☐		
	WORK COMPLIES WITH SAFETY REQUIREMENTS	☐	☐		

CONTRACTOR QUALITY CONTROL REPORT CONTINUATION SHEET

(ATTACH ADDITIONAL SHEETS IF NECESSARY)

DATE

PHASE	(BLANK NOT APPLICABLE)	YES	NO	IDENTIFY SPECIFICATION SECTION, DEFINABLE FEATURE OF WORK, LOCATION AND LIST PERSONNEL PRESENT
FOLLOW-UP	WORK COMPLIES WITH CONTRACT AS APPROVED INITIAL PHASE	☐	☐	
	WORK COMPLIES WITH SAFETY REQUIREMENTS	☐	☐	

Exhibit 8.1
Page 3 of 3

COMBINED FORM 01450-2 (7/96)

Exhibit 8.5

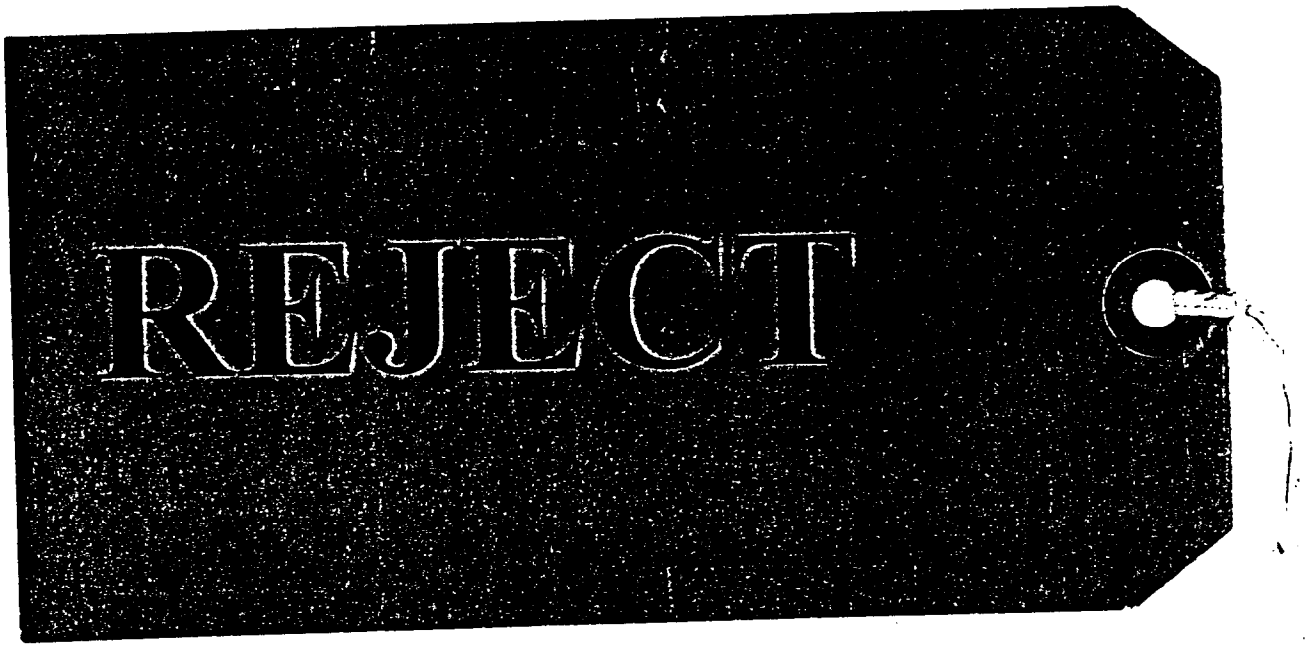

Exhibit 9.1

Definable Features of Work

Specification Section:	Definable Feature of Work:
01010	Erosion and Sediment Control
01010	Temporary Decontamination Pad
01430	Waste Sampling Requirements
02050	Demolition and Removal
02220	Borrow Material
02220	Topsoil and Seeding Site Restoration
02220, 02222	Excavation, Filling, and Backfilling
02222	Confirmation Sampling and Analysis
02223	Transportation and Disposal of Contaminated Material
02522	Soil Vapor Extraction and Air Sparge Wells
02571	Pavement Removal and Replacement
02661	Exterior Water Distribution System
02821	Chain-link Fences and Gates
02902	Procurement Quality Assurance - Soil Vapor Extraction System
	Procurement Quality Assurance - Offgas Carbon Adsorption System
02903	Procurement Quality Assurance - Air Sparge System
03302	Cast-in-Place Concrete
15054	Procurement Quality Assurance - Nonlubricated Rotary Screw Air Compressors (100 hp and larger)
15055	Procurement Quality Assurance - Nonlubricated Rotary Screw Vacuum Pumps
16011, 16301, 16402, 16462	Electrical General Requirements

* Specification requirements are based on Specification Manual: Groundwater Remediation: Q-Area Drum Storage Yard, Naval Base Norfolk, February 8, 1996

CONTRACTOR PRODUCTION REPORT

(ATTACH ADDITIONAL SHEETS IF NECESSARY)

DATE

CONTRACT NO.	TITLE AND LOCATION	REPORT NO.

CONTRACTOR	SUPERINTENDENT

AM WEATHER	PM WEATHER	MAX TEMP °F	MIN TEMP °F

WORK PERFORMED TODAY

WORK LOCATION AND DESCRIPTION	EMPLOYER	NUMBER	TRACE	HRS

JOB SAFETY

WAS A JOB SAFETY MEETING HELD THIS DATE? ☐ YES ☐ NO
(If YES, attach copy of the meeting minutes)

WERE THERE ANY LOST TIME ACCIDENTS THIS DATE? ☐ YES ☐ NO
(If YES, attach copy of completed OSHA report)

TRENCHING/SCAFFOLD/HV ELECTRICAL/HIGH WORK DONE? ☐ YES ☐ NO
(If YES, attachment statement or checklist showing inspection performed)

WAS HAZARDOUS MATERIAL/WASTE RELEASED INTO THE ENVIRONMENT? ☐ YES ☐ NO
(If YES, attach description of incident and proposed action)

TOTAL WORK HOURS ON JOB SITE THIS DATE	
CUMULATIVE TOTAL OF WORK HOURS FROM PREVIOUS REPORT	
TOTAL WORK HOURS FROM START OF CONSTRUCTION	

LIST SAFETY ACTIONS TAKEN TODAY/SAFETY INSPECTIONS CONDUCTED

☐ SAFETY REQUIREMENTS HAVE BEEN MET

EQUIPMENT MATERIAL RECEIVED TODAY TO BE INCORPORATED IN JOB

CONSTRUCTION AND PLANT EQUIPMENT ON JOB SITE TODAY INCLUDE NUMBER OF HOURS USED TODAY

REMARKS

CONTRACTOR/SUPERINTENDENT DATE

Routing: Contr. Adm.
Proj. Mgr.
Site Supv.
Proj. Acct.
CSE
QC
Job File

OHM Remediation Services Corp.

Project Name: _____
Delivery Order: _____
Contract Purchase Order N62470-93-D-3032
OHM Project No. _____

VARIANCE REQUEST (VR)

Date of Request: _____ Suspense Date: _____ VR No: _____

PROPOSED VARIANCE

Dwg Ref: _____ Spec Sec: _____
Site Location: _____

DESCRIPTION:

_____

Note: Approval of this variance will not result in an increase in cost or in time of performance to this contract.

Initiated By [ ] Navy
[ ] OHM
[ ] Regulatory Agency
[ ] Other

On-Site Engineer: _____ Date: _____

OHM Project Engineer: _____ Date: _____

Site Quality Control Manager: _____ Date: _____

OHM Project Manager: _____ Date: _____

APPROVALS [ ] Approved [ ] Modified (see below) [ ] Rejected

_____

Note: This is a clarification and does not create additional work that could be considered as a change to the cost of the project.

RPM: _____ Date: _____

ROICC/NTR: _____ Date: _____

VARIANCE REQUEST (VR)

I Purpose: A variance request (VR) is a traceable document that confirms approval or rejection of a proposal to modify a contractual requirement that will not affect the Delivery Order price and/or schedule.

The variance must be minor in nature, create no adverse impact on the design or function of the affected area, and not require a formal contract modification for implementation.

II Information: VR's contain the following information:

A. References contract documents: scope of work, drawings specification, etc.
B. States the proposed variation or deviation:
   1. Use of different material
   2. Employ different construction method
   3. Relaxation of contract requirements

C. Explains reason for request, such as:
   1. Specified material is not available
      a. Unreasonable delivery time
      b. Item is discontinued
      c. Improved or updated model available
   2. A less expensive but comparable material can be used
   3. Construction application, for example, soil compaction, not practical to field conditions, for example, material not capable of meeting specified density requirements.

III. Flow of Responsibilities:

A. Immediately upon discovery of the need for a variance, the VR form, containing the complete and correct information (as outlined above) is submitted to the technical lead person on site.
B. A technical review is performed on the variance request and identified as; approved; modified; rejected.
C. The approved or modified VR is forwarded to the site QC manager (if applicable) then the project manager. Post review, the VR is submitted to the ROICC who approves and acknowledges initiation. A copy is maintained regardless of the review status.

M Remediation
vices Corp.

Routing: Contr. Adm.
Proj. Mgr.
Site Supv.
Proj. Acct.
CSE
QC
Job File

Project Name: _____
Delivery Order: _____
Contract Purchase Order N62470-93-D-3032
OHM Project No. _____

REQUEST FOR INFORMATION (RFI)

Date of Request: _____ Suspense Date: _____ RFI No. _____

SITUATION/CONDITION REQUIRING CLARIFICATION

Dwg Ref: _____ Spec Sec: _____
Site Location: _____

DESCRIPTION:

DATE RECEIVED BY:
Certifying Engineer: _____ Tech. Rep: _____ ROICC: _____

RESPONSE:

Note: This is a clarification and does not create additional work that could be considered as a change to the contract drawings and/or specification.

RPM: _____ Date: _____

ROICC/NTR: _____ Date: _____

DL 3/18/96

Plot Scale:

REQUEST FOR INFORMATION (RFI)

I Purpose: The request for information (RFI) is a traceable document that clarifies information contained in the contract documents. The answer to an RFI could result in the need for an adjustment to the Delivery Order price and/or schedule.

If an adjustment to the Delivery Order is necessary, a work directive and/or a modification may be required.

II. Information: RFI's contain the following information:

A. References contract documents, such as: Scope of work, drawings, specification, etc.

B. States the problem, such as:

1. Conflicting material requirements
2. Conflicting information between or within drawings and specifications
3. Contract requirements are not appropriate to field conditions
4. Contract requirements are in conflict with appropriate Code requirements.

C. May suggest a solution

III. Flow of Responsibilities

A. Immediately upon discovery of the need for clarification, OHM submits the RFI form containing the complete and correct information as outlined above to the on-site technical representative and or QA.

B. The on-site technical representative and/or QA receives the RFI and reviews the information it contains.

C. The on-site technical representative and/or QA forwards the RFI to the Navy for their review and concurrence. The Navy returns one copy to OHM who must maintain and track submitted RFIs.

D. If information provided by the technical reviewer has impact to the Delivery Order cost or period of performance, OHM should provide written notification to the Navy prior to execution of the work.

Routing: Contr. Adm.
Proj. Mgr.
Site Supv.
Proj. Acct.
CSE
QC
Job File
John Franz–Prog.
COTR– J. Haste

OHM Remediation Services Corp.

Project Name: _____
Delivery Order: _____
Contract Purchase Order N62470–93–D–3032
OHM Project No. _____

WORK DIRECTIVE (WD)

Date of Request: _____ WBS Code: _____ [ ] new code WD No: _____
WBS Description: _____

TITLE OF WORK DIRECTIVE:

DESCRIPTION OF WORK: _____

WORK DIRECTIVE TYPE

[ ] Technical direction

[ ] Scope Growth (Mod to follow)
- [ ] Quanity Increase
- [ ] New Scope Item
- [ ] Other

[ ] Scope Reduction (Mod to follow)
- [ ] Quanity Decrease
- [ ] Scope Reduction
- [ ] Other

Initiated By:
- [ ] Navy
- [ ] OHM
- [ ] Regulatory Agency
- [ ] Other

Explanation: _____

Attachments: _____

COST IMPACT Rough order of Magnitude (ROM) Estimated value of item: _____
NOTE: This estimate includes direct costs, fringes and mark–ups. No fee.

SCHEDULE IMPACT Estimated Duration of Item _____ Work Days
Estimated Schedule Impact _____ Calender days

Is approval date critical [ ] yes [ ] no
If yes, indicate date: _____

Reason for critical approval date: _____

OHM Representative: _____ Date: _____
On–Site Engineer: _____ Date: _____
OHM Project Manager: _____ Date: _____

APPROVALS Note: Failure to approve by the critical date may result in additional cost and/or schedule impact.

[ ] Approved [ ] Modified (see attached) [ ] Rejected

RPM: _____ Date: _____
ROICC/NTR: _____ Date: _____

DL 3/18/96

Plot Scale: 1

Work Directive (WD)

1.0 Purpose: The purpose of the Work Directive is to provide a standardized document that communicates approval, modification, or rejection of either scope change (growth or reduction) or cost change (growth or reduction) by field personnel. The WD is a communication vehicle and individually is not justification for a contract modification. Other factors will determine whether a contract modification is required. The WD should be used for significant issues that will have a cost, scope, and/or schedule impact to a delivery order.

Should the field condition requiring the WD arise from change in scope such as: Differing site conditions, changed or evolving design, design errors or omissions, or direction by the Navy to perform significant additional work, formal contract modification may be required. Several work directives may be consolidated under one contract modification. Submission of a contract modification request should be coordinated in advance with the customer, and in any event should occur prior to 75% financial completion.

Examples of cost growth items requiring the execution of WD are: Technical direction that does not significantly change the scope of work or the need for personnel, equipment or material required to complete the current scope that are not in the budget (this includes modified resources loading due to schedule changes). Refer to program established guidelines for identifying cost versus scope growth as applicable.

2.0 Completing the Form

All lines on the form are to be completed. If particular information is not applicable write N/A on the line.

Lines that should never say N/A are: Date of request, Cost Code. WD No:; Change Title, Reason for Change, ROM Estimate, Schedule impact, OHM signature, ROICC signature. It is the responsibility of both the Navy and OHM to ensure that sufficient explanation is provided so that the work proceeds as required. If sufficient room is not available on this form additional pages should be attached.

All parties listed on the distribution must be copied on all work directives. All work directives whether accepted or rejected must be logged and kept on-site for inspection by OHM and the Navy.

(ROM) Rough order of magnitude estimate should be included on all work directives. This estimate should be in Navy cost (OHM revenue) dollars.

Schedule Impact. 1) How long will it take to execute the directed task, and 2) How the overall project schedule will be impacted should be addressed. (If you are extending the rental a on piece of equipment, the duration for the extension is put on line 1).

3.0 Flow of Responsibility

A As soon as possible upon OHM's discovery of a cost or scope change or direction by Navy personnel on a proposed change, the OHM project manager should prepare and submits a WD to the ROICC.

The ROICC may elect to confirm the change with the NTR, RPM, the Engineer of Record or the Certifying engineer.

B The ROICC reviews the WD and indicates its approval status; Approved, Modified, or Rejected.

C The ROICC then forwards the WD to OHM for action as required.

D The contractor modifies the Construction Schedule, The Schedule of Values, the WBS and all reports as appropriate. OHM enters the WD in the WD log for submission in the Monthly Status Report to the Navy. OHM will track cost associated with the WD either as separate WBS or as part of an existing WBS.

E If a Modification to the Delivery Order is required, the WD(s) should be used as the basis for the request.

Remediation Services Corp.

Routing: Contr. Adm.
Proj. Mgr.
Site Supv.
Proj. Acct.
CSE
QC
Job File

Project Name: _____
Delivery Order: _____
Contract Purchase Order N62470-93-D-3032
OHM Project No. _____

OVERTIME AUTORIZATION (OTA)

Date of Request: _____ WBS Code: _____ OTA No: _____

Reason for request

[ ] Emergency
[ ] Equipment Maintenance
[ ] Keep critical activities on schedule
[ ] Accelerate schedule
[ ] Other

Explanation: _____

Initiated By [ ] Navy
[ ] OHM
[ ] Other

Estimated period of overtime work _____ Start Date: _____ End Date: _____

ROM Cost Estimate _____

Requested By: _____ Date: _____
OHM Project Manager

APPROVALS

[ ] Approved [ ] Modified [ ] Rejected

Modification (If any) _____

RPM: _____ Date: _____

ROICC/NTR: _____ Date: _____

DL 3/10/96

Plot Scale: 1

OVERTIME AUTHORIZATION (OTA)

Purpose: The overtime authorization is a document that relays a request for working extended hours (in advance of implementation) for Navy representative acknowledgment/approval.

Reasons for the overtime, accompanied by a brief explanation, should be provided with each request.

Copies of each executed, modified, or rejected requests should be maintained on-site.

dl-ota/4/96-rdf

APPENDIX E
FINAL FIELD SAMPLING AND QUALITY ASSURANCE PLAN

FINAL
FIELD SAMPLING AND QUALITY ASSURANCE PLAN
FOR
GROUNDWATER REMEDIATION
Q-AREA DRUM STORAGE YARD
NAVAL BASE NORFOLK
NORFOLK, VIRGINIA

Prepared for:

DEPARTMENT OF THE NAVY
Atlantic Division
Naval Facilities Engineering Command
1510 Gilbert Street
Norfolk, Virginia 23511-2699
Contract No. N62470-93-D-3032

Prepared by:

OHM Remediation Services Corp.
Trenton, New Jersey

Michael J. Lacy, Ph.D.
Senior Project Chemist

Reviewed by:

Philip A. Tully, P.E.
Senior Project Manager

John P. Franz, P.E.
Program Manager

August 26, 1997
OHM Project 17260FSQA
Delivery Order No. 0073

OHM Remediation Services Corp.
A Subsidiary of OHM Corporation

TABLE OF CONTENTS

LIST OF TABLES, FIGURES, AND APPENDICES ii

1.0 INTRODUCTION 1-1

1.1 RESOURCES 1-1

2.0 SAMPLING AND ANALYSIS OBJECTIVES 2-1

2.1 SAMPLE LOCATIONS 2-1
2.2 SAMPLE FREQUENCY 2-1

3.0 DATA QUALITY OBJECTIVES 3-1

3.1 LABORATORY METHODS 3-2
3.2 QUALITY ASSURANCE/QUALITY CONTROL SAMPLES 3-2
3.3 DATA DELIVERABLES 3-3
3.4 DATA REDUCTION AND TABULATION 3-4

4.0 PROJECT ORGANIZATION AND RESPONSIBILITY 4-1

4.1 DATA ACQUISITION ACTIVITIES 4-1
4.2 PROJECT PERSONNEL WITH SAMPLING/ANALYSIS RESPONSIBILITIES 4-1

5.0 FIELD SAMPLING PROCEDURES 5-1

5.1 SAMPLE LOCATIONS 5-1
5.2 SAMPLE PROCEDURES 5-1
5.3 SUMMARY OF SAMPLING 5-2
5.4 DOCUMENTATION 5-3

6.0 SAMPLE CUSTODY AND SHIPMENT 6-1

6.1 INSTRUCTIONS FOR COMPLETING CHAIN-OF-CUSTODY RECORD 6-1
6.2 FIELD CUSTODY PROCEDURES 6-2
6.3 TRANSFER OF CUSTODY AND SHIPMENT 6-3
6.4 LABORATORY CUSTODY PROCEDURES 6-3

7.0 CALIBRATION PROCEDURE AND FREQUENCY 7-1

7.1 LABORATORY CALIBRATION 7-1
7.2 FIELD CALIBRATIONS 7-1

8.0 ANALYTICAL PROCEDURES 8-1

8.1 LABORATORY CERTIFICATION 8-1
8.2 TURN-AROUND-TIME 8-1
8.3 DISPOSAL ANALYSIS 8-1

9.0 LABORATORY QUALITY CONTROL 9-1

9.1 SAMPLE HANDLING IN THE LABORATORY 9-1
9.2 LABORATORY SAMPLE STORAGE 9-2
9.3 METHOD SPECIFIC QUALITY CONTROL 9-2
9.4 DATA QUALITY OBJECTIVES 9-2

10.0 DATA REDUCTION AND VALIDATION 10-1

10.1 DATA REDUCTION AND TABULATION 10-1
10.2 GENERAL PROCEDURES FOR DATA REVIEW/VALIDATION 10-1
10.3 DATA REPORTING 10-2

11.0 PERFORMANCE AND SYSTEM AUDITS 11-1

11.1 AUDITS 11-1
11.2 SYSTEM AUDITS 11-1
11.3 PERFORMANCE AUDITS 11-1

12.0 PREVENTIVE MAINTENANCE 12-1

12.1 SUBCONTRACT LABORATORY 12-1
12.2 FIELD INSTRUMENTATION 12-1

13.0 CORRECTIVE ACTION 13-1

13.1 CORRECTIVE ACTION PROCEDURES 13-1
13.2 LABORATORY 13-1

14.0 DELIVERABILITIES 14-1

LIST OF TABLES

TABLE 1.1	CONTAMINANTS OF CONCERN AND CLEANUP CONCENTRATIONS	1-1
TABLE 2.1	SVE SYSTEM SAMPLING FREQUENCY AND QUANTITY PER SYSTEM	2-1
TABLE 3.1	NFESC LEVEL C DATA DELIVERIES	3-3
TABLE 5.1	ANALYTICAL AND SAMPLE FREQUENCIES	5-2
TABLE 5.2	SAMPLE CONTAINERS, PRESERVATIVES AND HOLDING TIMES	5-3
TABLE 8.1	ANALYTICAL AND SAMPLE FREQUENCIES	8-1

LIST OF FIGURES

FIGURE 6.1	CHAIN OF CUSTODY FORM	6-5

LIST OF APPENDICES

APPENDIX A	CONTRACT LABORATORY QUALITY ASSURANCE PLAN
APPENDIX B	OHM STANDARD OPERATING PROCEDURES

1.0 INTRODUCTION

OHM Remediation Services Corp. (OHM) is pleased to submit this Field Sampling Quality Assurance Plan (FSQAP) to guide the sampling and analytical activities associated with the successful completion of Delivery Order 0073, Groundwater Remediation, Q-Area Drum Storage Yard (Q-Area), Naval Base Norfolk, Norfolk, Virginia. The sampling tasks described in this plan will be performed by members of OHM Northern Region Field Analytical Services Group, located in Trenton, New Jersey and/or Glen Allen, Virginia.

The contaminants of concern and their risk-based cleanup goals in this remedial action are:

TABLE 1.1
CONTAMINANTS OF CONCERN AND CLEANUP CONCENTRATIONS

Target Analyte	Cleanup Goal Concentration (µg/L)
Carbon Tetrachloride	2.73
Chloroform (Trichloromethane)	11
1,1-Dichloroethene (1,1-DCE)	0.378
Tetrachloroethene (PCE)	60
Trichloroethene (TCE)	49
Vinyl Chloride	< 1

1.1 RESOURCES

The following documents were used in preparation of this FSQAP:

- Delivery Order 0073, Groundwater Remediation at Q-Area Drum Storage Yard, Naval Base Norfolk, Norfolk, Virginia
- Remedial Action Contract No. N62470-93-D-3032
- Naval Installation Restoration Laboratory Quality Assurance Guide, Naval Facilities, Engineering Service Center, Port Hueneme, CA, 1996
- Test Methods for Evaluating Solid Waste, Physical/Chemical Methods, 3rd Ed., United States Environmental Protection Agency, 1994

2.0 SAMPLING AND ANALYSIS OBJECTIVES

The remedial activities at Q-Area, which relate to sampling and analysis, include:

- The collection of samples of drill spoils resulting from the installation of vapor extraction wells and trenches, for disposal characterization,
- The collection of samples of the drill spoils from the installation of injection and vapor extraction wells for disposal characterization,
- The collection of samples of decontamination water, well development water and site dewatering fluid for disposal characterization.
- The collection and analysis of groundwater samples.
- The collection and analysis of vapor samples from the treatment system, as well as to monitor the progress of the remediation.

2.1 SAMPLE LOCATIONS

Soil samples will be collected from the well installation drill spoils, vapor samples will be collected from the SVE system, and water will be collected from the monitoring wells and the air-water separator condensate. Groundwater from monitoring wells, and vapor samples form the SVE system will be analyzed to evaluate system performance while the other analytical results will be used for disposal characterization. Aqueous samples will be collected from 6 new groundwater monitoring wells, and 4 existing groundwater monitoring wells. Vapor samples will be collected before and after the carbon adsorption cells. Also, during the weekly visits, a total organic vapor detector will be used to monitor the concentrations in each of the influent lines at each area. Soil samples for disposal characterization will be collected/composited from five randomly selected locations except for volatiles, which will be collected as grab samples.

2.2 SAMPLE FREQUENCY

The soil vapor extraction system will have samples collected at the frequency shown in Table 2.1.

TABLE 2.1
SVE SYSTEM SAMPLING FREQUENCY AND QUANTITY PER SYSTEM

Weeks from Startup (startup = 0)	Sample Frequency[1]	Sample Quantity		
		Samples	Duplicate(s)	Total
1	daily	10	1	11
2 - 3	biweekly	8	1	9
4	weekly	2	0	2
5 - 52	monthly	22	4	26

1 - Influent and effluent samples will be collected on each visit

Once a groundwater monitoring well has been installed, developed and stabilized, aqueous samples will be collected and analyzed for baseline concentrations of the analytes listed in Table 1.1. When the remediation has been completed, aqueous samples will again be collected to verify the cleanup concentrations listed in Table 1.1 have been achieved.

Disposal samples will be collected at the frequency listed in Table 5.1 and consist of samples from drill and trench spoils, decontamination and well development water, oil-water separator condensate and used PPE.

Field sampling procedures are found in Section 5 and analytical procedures are found in Section 8 of this FSQAP.

3.0 DATA QUALITY OBJECTIVES

USEPA currently defines five levels of data quality for environmental projects, which relate to data precision, accuracy, and completeness. NFESC has adopted three of these levels for data reporting. The five defined levels of data quality are:

1. Screening (Level 1): This provides the lowest data quality, but the most rapid results. It is often used for health and safety monitoring at the site, preliminary comparison to ARARs (Applicable or Relevant and Appropriate Requirements), initial site characterization to locate areas for subsequent and more accurate analyses, and for engineering screening of alternatives (bench-scale tests). These types of data include those generated onsite through the use of organic vapor analyzers, temperature and conductivity meters and other similar real time monitoring equipment at the site.

2. Field Analyses (Level 2): This provides rapid results and better quality than in Level 1. Analyses include mobile lab generated data.

3. Engineering (Level 3)/NFESC Level 'C': This provides an intermediate level of data quality and is used for site characterization and engineering analyses. It may include mobile lab generated data and some analytical lab methods (e.g., laboratory data with quick turnaround used for screening, but without full quality control documentation).

4. Conformational (Level 4)/NFESC Level 'D': This provides the highest level of data quality and is used for purposes of risk assessment, engineering design, and cost analyses. These analyses require full CLP (Contract Laboratory Program) analytical and data validation procedures in accordance with U.S. EPA recognized protection.

5. Non-Standard (Level 5)/NFESC Level 'E': This refers to analyses by non-standard protocols, for example, when exacting detection limits, or analysis of an unusual chemical compound is required. These analyses often require method development or adaptation. The level of quality control is usually similar to Level 4 data.

OHM will be generating data conforming to DQO Levels 1 and 3/NFESC 'C' for these remedial analyses.

- DQO Level 1 corresponds to instrument data generated during field screening. This data will be obtained for Health and Safety monitoring, by screening the drill cuttings from the installation of the excavation wells.

- DQO Level 3/NFESC 'C' corresponds to all data generated in support of aqueous and vapor analyses.

- DQO Level 3/NFESC 'C' (without deliverables) corresponds to all data generated in support of disposal characterization.

Practical quantitation limits (PQLs) must be below the risk-based cleanup goals listed in Table 1.1 for the contaminants of concern. TCLP PQLs must be at or below regulatory limits.

3.1 LABORATORY METHODS

The subcontract laboratory will perform all analyses using accepted EPA SW-846 methodology. Refer to Table 5.1 for the intended analytical methods for this project. American Environmental Network's Quality Assurance Plan is provided for inclusion as Appendix A.

3.1.1 Precision

Precision will be determined through the use of duplicate sample analyses. These analyses will allow the reproducibility of the sampling and analysis procedures to be determined. This will be done using Equation 3.1, which determines the relative percent difference (RPD):

$$RPD = \frac{X_1 - X_2}{(X_1 - X_2)/2} \qquad \text{Eq. 3.1}$$

where X_1 represents the initial sample concentration and X_2 stands for the duplicate sample concentration. The RPD should be within ± 20%.

3.1.2 Accuracy

Accuracy will be determined through the use of matrix spike and matrix spike duplicate sample analyses. A known mass of contaminant(s) will be added to a sample prior to sample preparation. The sample will then be processed in the same manner as an environmental sample. The final sample concentration will be calculated and the percent recovery (%R) will be calculated for each spike constituent by Equation 3.2.

$$\%R = \frac{m_{si} - m_{ai}}{m_{ai}} \qquad \text{Eq. 3.2}$$

Where m_{si} is the environmental sample mass for constituent i, and m_{ai} is the mass of constituent I added to the sample. The acceptable limits for these analyses are analyte and method specific and are listed in Appendix A, the subcontract laboratory Quality Assurance Plan.

3.1.3 Completeness

Completeness is defined as the percent of analyses performed which yield acceptable data and is calculated by dividing the number of acceptable analyses by the total number of analyses performed. The goal for this project is 100% completeness for these analyses.

3.2 QUALITY ASSURANCE/QUALITY CONTROL SAMPLES

OHM will obtain the following QA/QC samples to assure accuracy, precision, and representativeness of the analytical data.

3.2.1 Duplicate samples

Duplicate samples are obtained to determine the degree of precision for sampling and analysis. Ten percent of the samples will be obtained in duplicate, by sequentially filling sample containers at the designated sample points. The analytical results for the duplicate pair will be compared; the difference expressed as a relative percentage difference (RPD). A high level of precision is shown by a small RPD.

The actual RPD should be within +/- 20 percent. OHM will obtain one (1) aqueous, and six (6) vapor, duplicate samples for this project.

3.2.2 Trip Blanks

Trip blanks will be included with each shipment of aqueous samples undergoing volatiles analysis. The trip blank will verify the presence/absence of cross contamination during transport between the laboratory and the site.

3.3 DATA DELIVERABLES

Laboratory data derived from the analytical methods in Table 5.1 will be reported in NFESC Level C deliverable format, as described in Table 3.1 of this FSQAP. Associated laboratory QA/QC will be included as an appendix to the results

TABLE 3.1
NFESC LEVEL C DATA DELIVERIES

Parameter	Method Requirements	Deliverables
Organics	Method blank spikes with results and control charts. Run with each batch of samples processed.	Control chart
	Results to be reported on CLP Form 1 or spreadsheet per Sect. 9. Sample results using CLP data flags.	Form 1 or Sect. 9 1/Sample chromatograms/ and mass spectra
	Surrogate recovery from samples reported on CLP Form 2. Surrogates to be used in volatiles, semivolatiles, pesticides/ PCB. For volatiles by GC, the names of surrogates should be changed to reflect the surrogate used.	Form 2
	Matrix spike/spike duplicate -1 spike and spike duplicate per 20 samples of similar matrix reported on Form 2.	Form 3
	Method blank reported on CLP Form 4.	Form 4 or Sect. 9
	For volatiles by GC, a similar format will be used as CLP Form 4 for blanks.	
	GC/MS tuning for volatiles/semi-volatiles. Report results on Form 5.	Form 5
	Initial calibration data reported on Form 6.	Form 6
	For volatiles by GC, the initial calibration data with response factors must be reported.	No Form
	For pesticide/PCB data Form 9 must be used for calibration data.	Form 9
	Continuing calibration GC/MS data reported on Form 7.	Form 7
	For volatiles GC data, the response factors and their percent differences from the initial must be reported.	No Form
	Internal Standard Area for Volatiles and Semivolatiles.	Form 8
	For pesticides/PCB data, the CLP Form 9 must be presented.	Form 9
	No chromatograms or mass spectra are presented for calibration. These data should be filed in the laboratory and available if problems arise in reviewing/validating the data. The calibration information should be available for checking during on-site audits.	
	Internal standard are for GC/MS analyses CLP Form VIII shall be supplied.	Form VIII
	Second column confirmation shall be done for all GC work when compounds are detected above reporting limits.	Chromatograms

TABLE 3.1
NFESC LEVEL C DATA DELIVERIES

Parameter	Method Requirements	Deliverables
	Chromatograms of confirmation must be provided.	
Metals	Sample results with CLP flagging system.	CLP Form 1 or Sect. 9
	Initial and continuing calibration.	CLP Form 2, Part 1 only
	Blanks 10% frequency.	Form 3
	Method blank taken through digestion (1/20 samples of same matrix).	Form 3 or Sect. 9
	ICP interference check sample.	Form 4
	Matrix spike recovery (1 per 20 samples of similar matrix).	Form 5, Part 1
	Postdigestion spike sample recovery for ICP metals. Only done if predigest spike recovery exceed CLP limits.	Form 5, Part 2 (never used for GFAA work)
	Postdigest spike for GFAA.	Recovery will be noted on raw data
	Duplicates (1 per 20 samples will be split and digested as separate.	Form 6 samples
	Method blank spike information will be plotted on control chart, one per batch of samples processed.	Control chart
	Standard addition. The decision process outlined in CLP page E-3 will be used to determine when standard additions are required.	Form 8
	Holding times.	Form 1
Wet Chemistry	Blank spike/1 batch.	Control chart
	Method Blank 1/batch.	Report result No format
	Sample results.	Report result No format
	Matrix spike/spike duplicate or calibration information.	Report result if applicable
	Calibration check- report percent RSD or percent difference from initial calibration.	No format

3.4 DATA REDUCTION AND TABULATION

Data generated from the site activities can be grouped into two broad categories:

- Field data, such as data collected during VOC/PID screening; and
- Chemical data for environmental samples generated by the project laboratory and accompanying QA/QC data package deliverables as required for DQO Level III/NFESC Level C.

Copies of all analytical results will be maintained on-site. Original analytical data will be stored in the Project File in the OHM office in Trenton, NJ. At the conclusion of the Project, field log books, sample logs, sample data sheets and chain-of-custody records will be placed in the Project File.

4.0 PROJECT ORGANIZATION AND RESPONSIBILITY

4.1 DATA ACQUISITION ACTIVITIES

Data acquisition activities for the project will be accomplished using personnel from both OHM and the subcontracted analytical laboratories. A complete organization chart for the project is presented in the Work Plan (Section 2.2)

For this project, OHM personnel will be responsible for the following activities:

- Development or revisions to the FSQAP.
- Collection, documentation, and off-site shipment of all site samples.
- Maintaining project communication with the subcontract laboratory.
- Review and/or validation of all subcontract generated data.

A discussion of OHM personnel titles, qualifications, and duties is presented in the subsection below. Information on laboratory personnel is presented in the subcontractor documents in Appendix A.

4.2 PROJECT PERSONNEL WITH SAMPLING/ANALYSIS RESPONSIBILITIES

Project personnel with sampling and analytical responsibilities include:

- Project Manager - Phil Tully is the Project Manager for this Delivery Order. He is responsible for all financial, safety and quality concerns on the job. Mr. Tully will maintain project status interactions with the Naval representative(s).

- Field Analytical Services Coordinator - Michael J. Lacy, Ph.D., serves as the Field Analytical Services Coordinator for all LANTDIV delivery orders. Dr. Lacy is responsible for all facets of analytical data generation, including oversight of field sampling personnel, analytical laboratory procurement, analytical data review and communication with the laboratory.

- Senior Technician - The senior technician implements all field sampling and completes all field documentation, ensuring all corporate, contract and project procedures are followed. The senior technician is also responsible for sample management and transportation to the off-site analytical laboratory.

5.0 FIELD SAMPLING PROCEDURES

5.1 SAMPLE LOCATIONS

Sample locations have been previously described in Section 2.1 of this FSQAP.

5.2 SAMPLE PROCEDURES

5.2.1 Vapor Samples

Vapor samples will be collected and then analyzed using a modification of EPA Method TO-14. Samples will be collected from sampling ports on the system manifold influent to the vapor phase GAC and the effluent, before discharge. The influent samples will be collected in a Tedlar® bag in an vacuum box. After the sample has been collected, 50 mL of sample will be used to purge the syringe and then the syringe will be refilled with 40 mL of sample. The entire syringe volume will be discharged in an evacuated 22 mL crimp-top vial. The vial will be transported with an additional vial containing pure air, which will serve as a trip blank to measure possible cross-contamination during shipment. Anticipated quantitation limits are shown in Table 8.1.

Additionally, samples will be collected from the four main ports of the vapor influent system individually. These samples will be collected in Tedlar® bags in a vacuum box, and then analyzed using a total organic vapor detector (PID or FID). During the course of the remediation individual extraction lines will be sampled, as necessary, to determine which wells have been adequately remediated.

5.2.2 Aqueous Samples

5.2.2.1 Groundwater

Groundwater samples will be collected using disposable bailers. Each well to be sampled will have three 40 mL volatile organic analysis (VOA) vials filled to overflow (to minimize headspace in the vials). Each vial will be preserved with hydrochloric acid. OHM Standard Operating Procedure QP-618 (Bailers) is included in Appendix B.

5.2.2.2 Disposal

Well development waters and decontamination water will be stored in a Baker tank prior to disposal. Aqueous samples for disposal analysis will consist of three VOA vials, preserved as above, for volatiles analysis. OHM Standard Operating Procedure QP-638 (Tap Sampling) is included in Appendix B.

5.2.3 Soil Samples

Soils will be characterized using the designated methods in Table 5.1. Soils disposal characterization samples will be collected as five point composites every 100 yd^3. The individual grab samples will be collected from around the pile and composited for the disposal analyses. The volatiles sample(s) will be collected discreetly. Each sample location will be screened using a PID and the location with the greatest reading will be sampled for TCLP volatiles analysis.

5.2.4 Decontamination Procedures

All non-disposable sampling equipment (augers, stainless steel trowels) will be decontaminated prior to, and between, sampling events by the following procedure:

- Detergent/tap water wash
- Distilled/de-ionized (DI) water rinse
- 10% nitric acid rinse
- DI water rinse
- Acetone rinse
- Air dry

Use of these procedures will ensure that material transfer between sampling points is minimized; that is, cross-contamination will not occur. This will be verified by the use of equipment rinsate samples.

5.3 SUMMARY OF SAMPLING

A sample summary is been presented in Table 5.1. Sample containers, preservatives, and holding times are shown in Table 5.2.

TABLE 5.1
ANALYTICAL AND SAMPLE FREQUENCIES

Analyte(s)	Sample Type	Method(s)	Frequency
Free Liquids	composite	9095	1/100 yd^3
TOX[1]	composite	9020	1/100 yd^3
TCLP Volatiles	composite	1311/8260	1/100 yd^3
Full TCLP Organics Metals	grab (volatiles) composite (others)	 1311/8260, 8270, 8080, 8150 1311/6010, 7470	1/rolloff
Ignitability/Reactivity /Corrosivity	composite	1010, mod. 1010/SW-846 Chapter 7 9040, 9045	1/rolloff
CLP Volatiles	vapor grab aqueous grab	modified 8260 8260	2/event 2/well

(1) - Total Organic Halides

TABLE 5.2
SAMPLE CONTAINERS, PRESERVATIVES AND HOLDING TIMES

Analyte(s)	Method	Container	Preservative	Holding Time
Free Liquids	9095	250 mL G	NA	ASAP
TOX[2]	9020	125 mL G with Teflon®-lined cap	4° C	7 days
TCLP Volatiles	1311/8260	125 mL G with Teflon®-lined cap	4° C	14 day to leaching
Full TCLP Volatiles	1311/8260	125 mL G with Teflon®-lined cap	4° C	14 day to leaching
Semivolatiles Pesticides Herbicides	1311/8270 1311/8080 1311/8150	2 -500 mL G with Teflon®-lined cap		
Metals	1311/6010, 7470			28 days to leaching
Ignitability Reactivity	1010, mod.1010 SW-846 Chapter 7	250 mL G with Teflon®-lined cap	4° C	ASAP
Corrosivity	9040, 9045		NA	
CLP Volatiles	8260 (aqueous)	3 - 40 mL VOA with hole-top cap and Teflon®-lined septum	4° C, HCl to pH<2	14 days
	8260 (vapor)	excavated 22mL VOA with hole-top cap and Teflon®-lined septum		14 days

5.4 DOCUMENTATION

All pertinent sampling and field survey information will be recorded in a logbook to facilitate reconstruction of events that occurred during closure activities. Logs will be kept in a waterproof bound notebook with numbered pages. All entries will be printed in waterproof ink. No pages will be removed and corrections will be made by drawing a single line through the incorrect data and initializing and dating the correction that was made to the side of the error. Entries in the logbook will contain, at a minimum, the following information:

- Location of sampling point
- Name and address of field contact
- Type of waste (i.e., soil, wastewater, etc.)
- Number and volume of samples taken
- Purpose of sampling (i.e., closure activities)
- Description of sampling point and sampling methodology
- Date and time of collection
- Collector's sample identification number
- Sample distribution and how transported (i.e., name of laboratory, UPS, FedEx)
- References, such as maps, photographs or sketches of the sampling site
- Field observations
- Any field measurements made (PID readings)
- Signatures of personnel responsible for observations.

These link the sample with the project, sampler, time, location, procedures, changes to the work plan, sample history, transfer to the laboratory, and ensures tamperfree transit.

Data, calibration, and maintenance records, samples, and documents, must be accounted for and retrievable at any time during an investigation. Chain-of-custody (Section 6.0) records are necessary to document sample identity, handling, and shipping procedures.

5.4.1 Sample Numbering

Each sample will be identified by a unique sample number, following the format described below

QA-XX-NNN

- QA- Q-Area
- XX denotes the sample area
  GW - Groundwater Monitoring Well Sample
  BT - Before Vapor Treatment
  AT - After Vapor Treatment
  DS - Disposal
  DP - Duplicate
- NNN represents the cumulative sample number, beginning at 001
- Examples
  - QAGW025 - Q-Area sample from a monitoring well, sample number 025
  - QABT100 - Q-Area sample from before the carbon cell, sample number 100

5.4.2 Sample Labels

The sample label will contain the following additional information:

- Sample Number
- Date
- Time (Military)
- Sample Description
- Preservatives used
- Samplers Initials
- Witnesses Initials
- Number of Containers

The sample description will note the sample type, e.g. confirmation sample and the depth at which the sample is obtained.

5.4.3 Field Sampling Log Book

The OHM Sample Technician will maintain a detailed, accurate account of the sampling event in the Field Sampling Log Book. The Field Sampling Log will contain:

- All information found on the sample label, as listed above.

- Other information such as:
  - Weather conditions
  - Personnel on-site
  - Site map which indicates sample locations
- The log book will also include a Table of Contents.
- Chain-of-custody information includes the names of the individuals involved in a custody transfer, a custody number (from the upper right corner of the COC form, a list of all samples for which the COC form applies.

6.0 SAMPLE CUSTODY AND SHIPMENT

Because of the evidentiary nature of samples collected during enforcement investigations, the possession of samples must be traceable from the time the samples are collected until they are introduced as evidence in legal proceedings.

Documentation of sample custody following collection is accomplished using a standard Chain-of-Custody Record. This document traces possession of every sample from the time of collection through sample analysis.

In general, chain of custody protocols follow those outlined in USEPA guidelines. This documentation begins immediately following sample collection and proper labeling. The chain-of-custody record provides information on the sealing of samples, the sample number, sample description, date and time of collection, number of containers for the sample, type of analysis requested, and any pertinent remarks are entered onto the chain of custody record form, an example of which is shown in Figure 6.1. The chain-of-custody record form also documents the condition of sample containers upon their receipt from the support laboratory. This form is completed using indelible black ink.

6.1 INSTRUCTIONS FOR COMPLETING CHAIN-OF-CUSTODY RECORD

1. Project Name - Name assigned by the U.S. Navy (Q Area).
2. Project Location - Norfolk Naval Shipyard (NNSY).
3. Project Number - Number assigned by OHM (17260).
4. Project Contact - Usually an OHM employee who is responsible for overseeing the sampling operation.
5. Project Telephone Number - Telephone number of OHM onsite office trailer.
6. Client Representative - Randy Jackson will serve as the Navy's Remedial Project Manager (RPM).
7. Project Manager/Supervisor - Phil Tully will serve as Project Manager.
8. Sample Number - Number assigned in the field during collection of samples (Section 5.4.1).
9. Date - Date of sample collection.
10. Time - Time of sample collection (24hour time).
11. Composite/Grab - Checkmark (✔) in the appropriate column to indicate whether sample is composite or grab.
12. Sample Description (Include Matrix and Point of Sample) - Indicate whether sample is soil, liquid, air, oil, etc., along with any useful description, such as appearance (color, density, odor, etc.) Includes the location, designation, such as monitoring well number, soil sample coordinates, or EPA description number. This information must be the same as the sample label information.
13. Number of Containers - Number, size (volume), and types of containers that are sealed and labeled for transfer to another location.

14. Analysis Desired (Indicate Separate Containers) - The name of the test (i.e., PCBs) or series of tests (VOAs) with method numbers is to be entered on the diagonal lines. For each sample container designated in the number of containers, a checkmark ( ) should appear in the column for the desired analysis.

15. Remarks - Enter sample specific instructions, cautions, or priorities (i.e., "do cyanide test first on this sample" or "caution may contain hydrofluoric acid;" also indicate preservation of sample (i.e., "sulfuric acid added"). Enter a sample specific comment (i.e., "sample lost in shipping").

16. Item Number - Each sample number is considered a separate item. Use sequential number (1,2,3...). Item numbers begin with No. 1 on each form. Do not carry item numbers from one form to another. List items 1,2,3... that you accepted.

17. Transfers Relinquished By - Name of person and affiliation transferring or surrendering the sample to another person, (do not use only the name of an organization).

18. Transfers/Accepted By - Person signing this part is responsible for the sample(s). In addition to the person's name, he should include his company name or agency(s) initial. Person accepting sample(s) is also responsible for making sure that all samples are accounted for when he signs an acceptance. If a common carrier is used, include the carrier name and bill-of-lading number or airbill number.

19. Date - Date on which sample is released to next person.

20. Time - Time at which sample is released to next person.

21. Remarks - Enter general instruction or requests, such as, fax report and turnaround times requested, preservatives added.

22. Sampler's Signature - The signature of the individual performing, or having immediate oversight of the sampling should appear in this section.

23. Laboratory name, telephone number, and contact.

6.2 FIELD CUSTODY PROCEDURES

In collecting samples for evidence, collect only that number which provides a fair representation of the media being sampled. To the extent possible, the quantities and types of samples and sample locations are determined prior to the actual field work. Minimization of sample transfers is always considered.

The field sampler is personally responsible for the care and custody of the samples collected until they are transferred or properly dispatched.

Sample labels shall be completed for each sample using indelible ink unless prohibited by weather conditions.

Throughout the course and at the end of the field work, the project chemist/scientist determines whether these procedures have been followed and whether additional samples are required.

Custody Seals will be placed over the cap of each sample container and the lids of shipping containers prior to the samples and containers leaving the custody of the shipping personnel. The Custody Seals will be preprinted adhesive-backed labels with perforations designed to break if the containers are opened.

6.3 TRANSFER OF CUSTODY AND SHIPMENT

Samples are accompanied by a COC record. When transferring the possession of samples, the individuals relinquishing and receiving sign, date, and note the time on the record. The person receiving the samples should always inspect for correct sample description and sample count. This record documents transfer of custody of samples from the sampler to another person, a mobile laboratory, or an analytical laboratory. The original record will accompany the shipment, and a copy will be retained in the project files.

Samples will be properly packaged in accordance with DOT regulations for shipment and dispatched to the selected laboratory for analysis with a separate custody record prepared for each laboratory. COC records will be placed in a gallon Ziploc™ bag and taped inside the cooler lid. All glass sample containers will be placed in Ziploc™-type bags for shipment. Also, Ziploc™-type bags will be filled with ice and placed between and around the samples in the cooler. Sufficient ice will be used to maintain sample temperature at 4° C $\pm$ 2° C. Vapor samples will be returned to Microseeps, Corp. (University of Pittsburgh Applied Research Center, 220 William Pitt Way, Pittsburgh, PA 15238, 412-826-5245). Ice will not be required for vapor sample transport. All other samples will be analyzed by American Environmental Network (AEN) (9151 Rumsey Rd., Suite 150, Columbia, Maryland 21045-1992, 410-730-8525).

Airbills from the courier will be retained as part of the permanent documentation. The person relinquishing the sample signs off his custody and enters the courier company's name and the bill-of-lading number or airbill number.

When samples are split with the facility or another government agency, a separate custody record is labeled to indicate this. In addition, the sample numbers from all the labels are recorded on the custody record. The person relinquishing the samples to the facility or agency should request the signature of a representative of the appropriate party, acknowledging receipt of the samples. If a representative is unavailable or refuses to sign, this is noted in the "received by" space. When appropriate (i.e., the representative is unavailable), the COC should contain a statement that the samples were delivered to the designation location at the designated time. The copy of the COC record may be given to the facility or agency upon request.

6.4 LABORATORY CUSTODY PROCEDURES

Once the sample arrives at the laboratory, custodial responsibility of the sample is transferred to that facility. The minimum requirements for a laboratory custodial system are:

- Designation of a sample custodian whose duties include:
  - Receiving samples
  - Initiating paperwork within the laboratory
  - Inspecting and documenting sample conditions, e.g. temperature, pH, leakage, breakage, seals
  - Verifying and recording agreement of information on the sample documents
  - Marking/labeling of samples for laboratory use
  - Distributing samples to appropriate analysts
  - Placing samples and extracts into the appropriate storage and/or secure areas
  - Controlling access to samples and extracts
  - Monitoring storage conditions for proper temperature and prevention of cross-contamination
  - Proper disposal of samples and extracts

- Secure appropriate storage for samples and extracts
- Sample tracking system
- Controlled access to storage areas
- Monitoring procedures for storage areas

LAB COPY

OHM Corporation

CHAIN-OF-CUSTODY RECORD

Form 0019
Field Technical Services
Rev. 08/89
136200

O.H. MATERIALS CORP. • P.O. BOX 551 • FINDLAY, OH 45839-0551 • 419-423-3526

PROJECT NAME		PROJECT LOCATION
PROJ. NO.	PROJECT CONTACT	PROJECT TELEPHONE NO.
CLIENT'S REPRESENTATIVE		PROJECT MANAGER/SUPERVISOR

ITEM NO.	SAMPLE NUMBER	DATE	TIME	COMP	GRAB	SAMPLE DESCRIPTION (INCLUDE MATRIX AND POINT OF SAMPLE)	NUMBER OF CONTAINERS	ANALYSIS DESIRED (INDICATE SEPARATE CONTAINERS)								REMARKS
1																
2																
3																
4																
5																
6																
7																
8																
9																
10																

TRANSFER NUMBER	ITEM NUMBER	TRANSFERS RELINQUISHED BY	TRANSFERS ACCEPTED BY	DATE	TIME	REMARKS
1						
2						
3						
4						SAMPLER'S SIGNATURE

FIGURE 6.1

7.0 CALIBRATION PROCEDURE AND FREQUENCY

7.1 LABORATORY CALIBRATION

The subcontract laboratory is expected to perform calibrations that are in keeping with the requirements of the analytical method(s) being performed. The subcontract laboratory's calibration procedure(s) and frequency(ies) will be found in the subcontract laboratory Quality Assurance Plan in Appendix A.

7.2 FIELD CALIBRATIONS

On-site total organic vapor detector(s) (PID and/or FID) will be calibrated before use according to manufacturer's instruction and/or OHM Section 7 (Air Monitoring) of the Health and Safety Plan.

8.0 ANALYTICAL PROCEDURES

The analytical parameters of concern in the remediation of LP20 are listed in Table 8.1. The appropriate analytical method and practical quantitation limits for soil and water are also listed.

8.1 LABORATORY CERTIFICATION

The selected laboratory will meet all applicable U.S. Navy contract requirements. The selected laboratory will meet all applicable U.S. Navy contract and Virginia state requirements.

8.2 TURN-AROUND TIME

All sample analyses will be performed within a 24 hour turn-around-time from sample receipt at the laboratory for vapor analyses, a 5 day turn-around-time for groundwater analyses and a 10 working day turn-around-time for disposal analyses.

8.3 DISPOSAL ANALYSIS

TCLP procedures are generally used for the characterization of hazardous waste. In lieu of TCLP analysis, soils and rinsewaters will be characterized for the analytical parameters listed in Table 8.1. Eighteen of these compounds are TCLP-listed compounds.

If any TCLP-equivalent threshold is exceeded, the matrix of concern (asphalt, soil, rinsewater) will be considered hazardous for those parameters.

The OHM transportation and disposal coordinator will assign waste codes to the pertinent soil, concrete, and rinse water materials, based upon the results of disposal analysis.

TABLE 8.1
ANALYTICAL AND SAMPLE FREQUENCIES

Analyte(s)	Sample Type	Method(s)	Frequency
Free Liquids	composite	9095	1/100 yd^3
TOX[1]	composite	9020	1/100 yd^3
TCLP Volatiles	composite	1311/8260	1/100 yd^3
Full TCLP Organics Metals	grab (volatiles) composite (others)	 1311/8260, 8270, 8080, 8150 1311/6010, 7470	1/rolloff
Ignitability/Reactivity /Corrosivity	composite	1010, mod. 1010/SW-846 Chapter 7 9040, 9045	1/rolloff
CLP Volatiles	vapor grab aqueous grab	modified 8260 8260	2/event 2/well

(1) - Total Organic Halides

9.0 LABORATORY QUALITY CONTROL

Quality control related to the acquisition of the chemical, geotechnical engineering, and geosynthetic material data has two main elements once the samples arrive at the laboratories. The first involves the documented handling of the samples as they are processed through the laboratory. The second area involves the project requirements for the method specified quality control. These two elements are discussed separately in the following two sections.

9.1 SAMPLE HANDLING IN THE LABORATORY

The proper handling begins with the document receipt by the laboratory of the samples from the field team. After signing the chain-of-custody, the sample receipt personnel will inspect the shipping containers and samples and document the condition in which the samples were received, especially noting any deficiencies in the "Remarks" box of the Chain-of-Custody Form and the sample log book.

Following the initial receiving tasks, the samples will be logged into a hardbound handwritten notebook and the computer data system. The data system generated work requests will be reviewed for accuracy and will be placed in the proper file.

In general, the receiving laboratory's sample custodian will:

- Examine the integrity of the shipping cooler and inner shipping containers, determine if the proper temperature has been maintained during shipment and verify the completeness of the chain of custody. If samples have been damaged during shipment, the remaining samples will be carefully examined to determine whether they were affected. Any samples affected shall also be considered damaged. It will be noted on the Analysis Request and Chain-of-Custody Record that specific samples were damaged and that the samples were removed from the sampling program. Field personnel will be notified as soon as possible that samples were damaged and that they must be resampled, or the testing program changed, and an estimate of the cause of damage.

- Compare samples received against those listed on the Chain-of-Custody Record.

- Verify that sample holding times have not been exceeded as described in SW-846.

- Sign and date the Analysis Request and Chain-of-Custody Record and attach the waybill to it.

- Denote the samples in the laboratory sample log-in book with contains the following information:

  - Project identification number
  - Sample numbers
  - Type of samples
  - Date received in laboratory
  - Record of the verified time of sample receipt (VTSR)
  - Date put into storage after analysis is completed
  - Date of and disposition of sample disposal.

The last two item will be added to the log when the action is taken.

- Notify the laboratory project manager of sample arrival.
- Place the completed Analysis Request and Chain-of-Custody Records in the project file.

Holding times for the samples associated with this project will begin at the time of sample collection.

9.2 LABORATORY SAMPLE STORAGE

The primary considerations for sample storage are:

- Maintenance of prescribed temperature, if required, which is typically 4 degrees Celsius
- Extracting and/or analyzing samples within the prescribed holding time for the parameters of interest

The requirements for temperatures and holding times will be followed. Placing of samples in the proper storage environment is the responsibility of the Sample Custodian, or designee, who will notify the Laboratory Group/Team Leaders, or designated representative, if there are any samples which must be analyzed immediately because of holding-time requirements.

9.3 METHOD SPECIFIC QUALITY CONTROL

The methods of analysis are the standard methods that will be followed without deviation. The analytical methods have quality control requirements and/or recommendations and the laboratory will meet or exceed all method quality control as specified by the method. This includes calibration procedures and frequency (including the GC/MS tune date), laboratory quality control checks (internal standards and surrogate spike recoveries), detection limits, corrective actions and reporting.

9.4 DATA QUALITY EVALUATION

The data quality evaluation that will be completed at the laboratory will be a combination of contract compliance review and limited data evaluation. All data generated will be reviewed to ensure that they meet the written requirements. This review will be based on comparison of the information generated by the Laboratory with the written requirements of the Sampling and Analytical Plan for the project. The second portion of this process which deals more with data evaluation will involve review of the quality control results and preparation of a summary report qualifying the data. Review will include all quality control parameters such as holding times, detection limits, method blanks, surrogate recoveries, matrix spikes, matrix spike duplicates, interference check sample result, internal standard data, GC/MS tune data and the initial and continuing calibration data. The data evaluation summary is intended to provide a qualitative judgment of the overall integrity and usefulness of the data.

10.0 DATA REDUCTION AND VALIDATION

10.1 DATA REDUCTION AND TABULATION

Data generated from the site activities can be grouped into two broad categories:

- Field data, such as data collected during VOC screening; and
- Chemical data for environmental samples generated by the project laboratory and accompanying QA/QC data package deliverables as required for DQO Level II and Level III.

These data will be compiled and managed using a central project filing system. The field and laboratory data filing system will be a manual storage system established at the OHM's field office at the Site. Field and laboratory data will be filed chronologically. Field log books, sample logs, sample data sheets, chain-of-custody records, laboratory log books, and laboratory calculation sheets shall be labelled with a task number and date.

10.2 GENERAL PROCEDURES FOR DATA REVIEW/VALIDATION

Level I data (e.g., health and safety screening for VOCs) will be reviewed to ensure that the acquired data is of acceptable quality. This review will include calibration and maintenance records for each applicable instrument, and field logbooks to verify that appropriate SOPs were followed. The acceptance of field instrument screening data is based upon the satisfactory calibration of the instrument as described in the instrument SOP/directions and the collection and analysis of samples as per the associated SOP/instrument directions.

10.2.1 Level I Data

Level I data (e.g., screening for VOCs) will be validated by reviewing calibration and maintenance records for field instruments and field logbook information associated with individual data sets to ensure that appropriate SOPs were followed. Data validation, therefore, will be qualitative, and will focus on whether field screening data are of acceptable quality based upon supporting documentation. Acceptance or rejection of data will be determined by the judgement of experienced field personnel familiar with the SOPs.

10.2.2 Level III Data

Generation of the Level III data will include the analysis of QA/QC samples, including blanks, calibration and reference standards, and possibly spiked samples in some instances; however, a complete CLP QA/QC analysis program will not be performed for these samples. Items that will be reviewed to validate the data include:

1. Integrity and completeness of the data package,
2. Holding times from sample receipt at the laboratory to sample extraction and analysis or holding times from sample receipt to analysis, as appropriate,
3. Trip blank and laboratory method blank sample results,
4. Matrix spike, matrix spike duplicate, and replicate analyses,

5. Surrogate recoveries,

6. Field blank sample results, and

7. Field duplicate results.

Data validation will be a qualitative process. Review of precision, accuracy, representativeness, completeness and comparability criteria will be included whenever measurement data are reviewed. The analytical laboratory will provide numerical precision and accuracy data that will be compared to the acceptance criteria. Precision and accuracy values for project data sets that are within the ranges for the type of sample and analytical method used will be considered acceptable. In some cases, data of apparently poor precision and/or accuracy may be somewhat useful. The judgement to accept such data, with appropriate qualifications, will be made by a data validator with appropriate technical expertise.

10.3 DATA REPORTING

The Resident Officer in Charge of Construction (ROICC), will be provided all analytical results by the OHM Project Manager, Phil Tully. Entries with associated quality assurance limitations will be appropriately flagged.

The project laboratory will report the data in a certificate of analysis format. Sample analytical results and accompanying QA/QC sample results will be reported to the ROICC on computer diskette files suitable for transfer to the spreadsheet data base.

Analytical data will be identified according to the project laboratory's procedures for establishing sample lots, so that sample analysis data can be matched to corresponding QA/QC samples, control charts, and calibration data.

11.0 PERFORMANCE AND SYSTEM AUDITS

11.1 AUDITS

QA audits are performed to ensure and document that required procedures and QA/QC measures are being used by laboratory personnel to provide data of acceptable quality, and that subsequent calculations, interpretation, and other project outputs are checked and validated. Both scheduled and unscheduled audits are included in a QA program. In addition, technical and peer reviews will be conducted by designated laboratory personnel and senior managers.

The designated QA Manager of the subcontractor laboratory will conduct system, method, and performance audits of laboratory activities. These audits will be performed in accordance with the subcontractor laboratory QA/QC plan. If the audits identify issues affecting the reliability of data reported by the laboratory, the QA Manager will take appropriate corrective action. In addition, the QA/QC Officer may perform independent system and performance audits of the laboratory.

11.2 SYSTEM AUDITS

A system audit is conducted to ensure that the mechanisms or structures that are in place for a selected project activity contain the necessary components to meet overall project requirements, and to assess whether personnel in laboratory settings are adhering to established procedures and QA/QC requirements. Examples of activities that could be audited include laboratory analysis and sample tracking programs and data management systems. A system audit of a sample tracking program may include an evaluation of the methods used to ensure that appropriate sample custody is maintained throughout the receipt, preparation, extraction, and analysis steps within the laboratory, and that laboratory personnel are familiar with and use the sample tracking system effectively. The overall objective of a system audit is to assure that the QA/QC framework that has been developed is adequate to maintain acceptable data quality, and is being followed by laboratory personnel.

System audits may include the assessments of:

- Laboratory analytical programs, including equipment calibration, use of QC samples (e.g., blanks, spikes, reference standards, and duplicates), and documentation regarding solvents and reagents used in sample preparation
- Sample tracking systems, preventive maintenance programs, and data storage and reporting systems for subcontractor laboratories involved in chemical and physical testing
- Data validation procedures and in-house management and statistical evaluation of validated data

11.3 PERFORMANCE AUDITS

A performance audit, based upon a quantitative review of QC samples (including blanks, reference and calibration standards, and duplicates as applicable) is considered appropriate for the project for Level II and III data. Performance audits of Level I analyses will be qualitative and focused on adherence to calibration and screening protocols.

The performance audit of Level III analyses will focus on the precision and accuracy of measurements through quantitative evaluations of reproducibility, and will also include assessment of blanks and matrix spikes to determine whether cross-contamination or matrix interferences are occurring. Sampling decontamination procedures will be evaluated through review of data from rinse blanks and duplicate samples. The performance audit for Level II data will include review of maintenance and calibration records.

The required data levels and anticipated end uses for the specific types of information being gathered will affect the level of detail required for performance audits, e.g., evaluating the quality of data from headspace screening (Level I data) requires only an assessment of sample handling techniques, site conditions, and instrument calibration, whereas more sophisticated sampling that includes spikes, duplicates, and blank samples requires a more rigorous QA review. Details regarding the specific types and frequency of collection of QC samples to be included in various data collection activities are provided in Sections 3 and 5 of this plan.

12.0 PREVENTATIVE MAINTENANCE

12.1 SUBCONTRACT LABORATORY

The subcontract laboratory is expected to perform preventative maintenance on all analytical instrumentation in order to minimize instrument downtime and the need for corrective action(s). Preventative maintenance procedures for the subcontract laboratory are found in Appendix A.

12.2 FIELD INSTRUMENTATION

The photoionization detector will be maintained as described in Section 7 (Air Monitoring) of the Health and Safety Plan.

13.0 CORRECTIVE ACTION

Corrective actions may be required when an out-of-control situation occurs. This type of situation can occur in either the field/sampling or the laboratory and may adversely affect data quality or quantity. Each of these areas is addressed below. All corrective actions will be noted and the documentation will be provided to the appropriate OHM and/or client management.

13.1 FIELD SAMPLING

Field sampling situations which may require corrective actions include, but are not limited to:

1. Unavailability of predetermined sample locations
2. Improperly packaged samples
3. Mislabeled samples
4. Deficient execution of FSQAP

These situations will be corrected through discussions with the sampler, Project Chemist, Project Manager and laboratory, if required. If necessary, the client representative will also be notified. Part of the corrective action will be to ensure that procedures are written/amended to alleviate the problem, if possible. Corrective actions will be implemented at the lowest possible management level to speed resolution.

13.2 LABORATORY

No analytical corrective actions will be performed by OHM. Laboratory corrective action(s) may be required if:

1. Any QC data is outside of the acceptable limits for precision and accuracy.

2. Any blanks or laboratory control samples contain contaminants above acceptable limits.

3. Undesirable trends are detected in spike and/or surrogate recoveries, or duplicate sample RPD.

4. There are unusual changes in the method detection limits.

5. Deficiencies are detected by the QA department during internal or external audits or from the results of performance evaluation samples.

6. Inquiries concerning data quality are received from the Contracting Officer.

Corrective action procedures for out-of-control events in the following areas will be included in the contract laboratories Quality Assurance Plan (to be submitted prior to mobilization).

1. Incoming samples
2. Sample holding times
3. Instrument calibrations
4. Practical quantitation limits
5. Method QC

6. Calculation errors
7. Laboratory audits

Short term corrective actions are initiated and performed by the analyst during sample analysis procedures. These corrective actions are necessary for analyses to be completed successfully. Examples of the situations requiring corrective actions are listed below:

- Instrument performance does not meet acceptable criteria
- Standard degradation/volatilization during storage
- Results of calibration check standard are outside of acceptable range
- Contamination identified in blanks, QC samples or the instrument
- Quality Control data is outside of acceptable limits

Long term corrective actions may be initiated to correct repetitive problems, unusual occurrences or trends, or as a result of internal/external audits. A long term corrective action will include some or all of the following, depending upon the type of irregularity:

- Review of relevant data
- Evaluation of detection limit(s)
- Standards validation
- Evaluation of instrument and equipment performance
- Re-analysis of sample
- Evaluation of contamination and matrix interference effects
- Training
- Review/revision of operating procedure

Other causes for corrective actions may include:

- Client identified errors in analysis/reporting

- Data review corrective actions - Errors, deviations and omissions from standard laboratory protocols identified during a review for QC data quality and compliance with overall quality objectives may result in corrective action(s).

- Client recommended corrective actions

14.0 DELIVERABLES

OHM will provide the U.S. Navy the following deliverables:

- **Contractor Production Report (CPR)** will include all sampling activities which were performed during each day of on-site activities. All available data will be indicated on the Sample Summary Matrix. The CPR will also list all applicable personnel and equipment and any expendables purchased which were needed to complete the days activities. Any field modifications will be noted on the CPR. Additionally, all problems encountered and corrective actions will be noted.

- **Sample Summary Matrix** will include all analytical and quality control sample numbers and locations, date sampled, whether the sample was a grab or composite and the analyses performed. There will also be space for sample specific comments. This matrix will be updated when samples are collected and the modified matrix will be included as an attachment to the CPR.

- **Quality Control Summary Report** will be submitted to the Navy upon completion of site activities. All quality control measures which relate to sampling and analyses of relevant matrices will be discussed. The QC discussion will include laboratory data, tables, graphs, calibration curves, standards used and any other information necessary to provide a full discussion of applicable QC, including any problems encountered and corrective actions taken.

APPENDIX A
CONTRACT LABORATORY QUALITY ASSURANCE PLAN

AMERICAN ENVIRONMENTAL NETWORK (MARYLAND), INCORPORATED

LABORATORY

and

ON-SITE/MOBILE

OPERATIONS

QUALITY ASSURANCE MANUAL

APRIL 1995

American Environmental Network (Maryland), Incorporated
9151 Rumsey Road Suite 150
Columbia, Maryland 21405
(410)730-8525 FAX (410)997-2586

PROPRIETARY INFORMATION

UNCONTROLLED COPY

1.0 TITLE PAGE

Document Title: Laboratory Quality Assurance Manual, American Environmental Network (Maryland), Incorporated.

Revision Number: Two (2)

Date: April 19, 1995

Responsible Official: Larry J. Frantz

Title: General Manager
Signature: [signature]
Date: April 24, 1995

QA Officer: Marsha J. Burrell
Signature: Marsha J. Burrell
Date: April 24, 1995

2.0 TABLE OF CONTENTS

SECTION		PAGE	REVISION NUMBER	DATE
1.0	Title Page	1-1	2.0	4/19/95
2.0	Table of Contents	2-1	3.0	6/19/95
3.0	Statement of Policy	3-1	2.0	4/19/95
4.0	Organization and Responsibilities	4-1	2.0	4/19/95
5.0	QA Objectives for Measurement of Precision, Accuracy, and MDLs	5-1	1.0	12/1/94
6.0	Sampling Procedures	[on hold for future use]		
7.0	Sample Chain of Custody	7-1	2.0	4/19/95
8.0	Analytical Procedures	8-1	2.0	4/19/95
9.0	Calibration Procedures and Frequencies	9-1	2.0	4/19/95
10.0	Preventative Maintenance	10-1	2.0	4/19/95
11.0	QC Checks and Routines to Assess Precision, Accuracy,	11-1	2.0	4/19/95
12.0	Data Reduction, Validation, and Reporting	12-1	2.0	4/19/95
13.0	Corrective Actions	13-1	1.0	12/1/94
14.0	Performance and System Audits	14-1	1.0	12/1/94
15.0	Quality Assurance Reports	15-1	2.0	4/19/95

FIGURE		REVISION NUMBER	DATE
4-1	Organizational Chart	2.0	4/19/95
7-1	Chain of Custody		
7-2	pH Verification Form		
7-3	Sample Receipt Checklist		
7-4	LIMS Refrigerator Log		
7-5	LIMS Internal Chain of Custody		
8-1	SOP Review Sheet (Individual)		
8-2	SOP Master Review/Revision		
8-3	SOP Tracking Form		
12-1	Chloride Notebook Page		
12-2	Metals Digestion Notebook Page		
12-3	Organic Extractions Notebook Page		
12-4	3 Level Review Sign Off Sheet		
13-1	Corrective Action/Project Discrepancy Form		
14-1	Monthly Internal Audit Checklist		
	List of Tables		
5-1	Quality Assurance Objectives		
9-1	Calibration Procedures		
9-2	Major Equipment		
10-1	Preventative Maintenance Procedures		
	Appendices		
A	Laboratory Floor Plan		
B	Laboratory Certifications		
C	Staff Resumes	2.0	6/6/95
D	SOP Index	2.0	4/19/95
E	Holding Times, Preservations, Containers		

3.0 STATEMENT OF POLICY

American Environmental Network-Maryland (AEN-MD), Inc. provides a wide range of analytical services, covering soil, air and water pollution, environmental impact assessment, industrial process control, effluent and emission pollution control, and research and development for hazardous waste management. Each of these activities requires laboratory data for decision making. To be valuable these data must accurately describe the characteristics and concentrations of constituents in the sample submitted for analysis. At AEN-MD high standards for precision and accuracy of data are maintained by a Quality Assurance Program that insures documented quality control measures at all levels.

Specifically, the objectives of the AEN-MD QA/QC Program are to:

- Estimate the reliability (accuracy) and reproducibility (precision) of each analytical system in a cost effective manner.
- Allow the early recognition and correction of problems which might affect the reliability and reproducibility of data.
- Achieve a level of data quality that meets CLIENT requirements for completeness, precision, accuracy, representativeness, comparability and dependability.

AEN-MD is fully committed to achieving levels of data quality that meet user and regulatory requirements for completeness, precision, accuracy, representativeness, comparability, and dependability. In order to meet these levels of proficiency, AEN-MD has instituted the Quality Assurance Program described in this manual. This QA plan, in conjunction with the Standard Operating Procedures provides for a program with superior quality objectives and should be utilized for all laboratory projects.

In addition to it's Columbia, Maryland laboratory, AEN-MD operates on-site laboratories (referred to as OSL) and mobile labs (ML). The same high quality standards are applied to work performed at these facilities as those used at the Maryland lab.

This QA Plan has been prepared by the Quality Assurance Officer. It is subject to a minimum of an annual review process and revisions/additions are make as necessary to insure compliance with regulatory requirements and Good Laboratory Practices (GLP).

4.0 ORGANIZATION AND RESPONSIBILITIES

AEN-MD is part of American Environmental Network, Incorporated, which has its headquarters in Mt. Lakes, New Jersey. Figure 4-1 illustrates the organizational structure of AEN-MD.

General Manager

The General Manager has overall responsibility for the quality of work produced by American Environmental Network, Inc. The General Manager uses the independent function of the Quality Assurance Manager (QAM) to define and execute the Quality Assurance Program.

Quality Assurance Manager

The Quality Assurance Manager (QAM) has responsibility for the establishment and execution of the Quality Assurance Program and for defining and measuring the overall program effectiveness.

The QAM reports directly to the General Manager, and is empowered with the required authority and organizational freedom to independently implement an effective program.

The QAM is responsible for reviewing and revising the Quality Assurance Program on a continuing basis to assure compliance with the latest revisions of applicable regulations. A formal review of the program is performed annually.

Laboratory Manager

The responsibility for compliance to the general workmanship and standard practices, shall be vested in the Laboratory Managers.

The Laboratory Managers have responsibility for directing the laboratory operational groups to adhere to the QA/QC program. This responsibility is met through the following steps:

- recruiting, hiring, and training suitably qualified personnel
- allocating sufficient staff, time, materials, and equipment to accomplish required tasks
- integrating QC measures into the job descriptions of the laboratory personnel so that each employee is responsible for the quality of the work he/she produces
- efficiently responding to corrective action requirements identified by QAM
- assignment of SOP writing to the appropriate laboratory personnel
- review and approval of SOPs

Project Operations Director

The Project Operations Director has responsibility for overseeing all Project Manager. The Project Operations Director also coordinates many of the technical details of a project with clients. The Project Operations Director may recommend methods or suggest alternative methods based on client needs. The Project Operations Director reports directly to the General Manger.

Laboratory Supervisor

The laboratory supervisor plays a key roll in the implementation of the Quality Assurance/Quality Control Program. The supervisor is responsible for the quality of data generated by his/her group. All operations performed in his/her section must comply with internal Standard Operating Procedures and individual contract requirements. The supervisors must train analytical personnel, prepare or update SOPs for each operation, and instruct analysts to perform QC checks. The supervisors assure that all QC criteria for each data set have been met before releasing results for reporting. Additionally, the supervisor documents

nonconformance events and corrective actions taken. The laboratory supervisor reports directly to the laboratory manager.

Analyst

The analyst is responsible for following the appropriate methods, documenting his/her activities and results concisely, and implementing the QC checks which are defined in the SOP's. The analyst is expected to produce data of measurable quality and, therefore, must evaluate the outcome of QC samples as part of the analysis. As the first line of control, the analyst can identify quality problems and initiate a Project Discrepancy Report (PDR) that addresses the problem to the laboratory supervisor.

On-Site and Mobile Laboratory Analyst

The analysts employed to work at the OSL/ML have the same responsibilities as do analysts at the Columbia, Maryland facility. They are also responsible for following project specific SOPs and have the responsibility for routine maintenance and care of the instruments under their control. The OSL/ML laboratory chemist reports directly to the General Manager, with the support of a project manager and the QA Manager.

Project Manager

The Project Manager (PM) has the responsibility of ensuring that client projects are completed in a timely manner. The project manager is the clients point of contact with the laboratory. The project manager has the responsibility of contacting the client with any problems encountered during sample analysis. The project manager reports directly to the Project Operations Director.

Sample Custodian

The sample custodian has the responsibility of verifying that all samples meet laboratory acceptance criteria for conditions and preservations prior the analysis. The sample custodian also has the responsibility of entering sample information into the LIMS and distributing paperwork to the various analytical departments. The sample custodian reports directly to the Project Operations Director.

It is imperative that each manager, supervisor, chemist, and technician be familiar with these quality objectives and to follow this plan. It is the responsibility of each individual to carry out this plan with the utmost attention.

AMERICAN ENVIRONMENTAL NETWORK, INC.

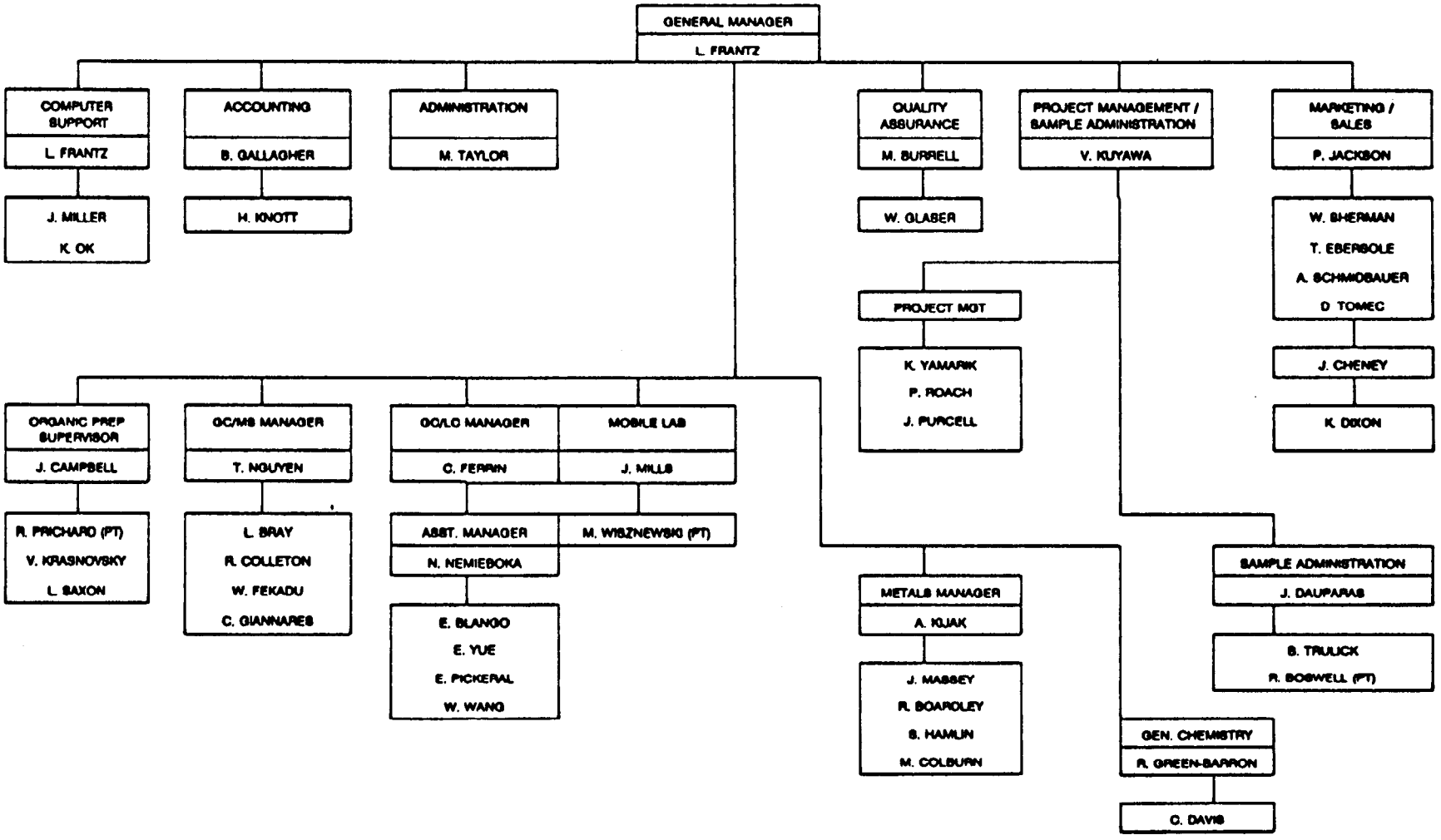

5.0 QUALITY ASSURANCE OBJECTIVES FOR PRECISION, ACCURACY AND METHOD DETECTION LIMITS

Tables 5.0 (A) - 5.0 (Z) have values representing targets controls for accuracy, precision and method detection limits for methods performed at AEN-MD. Wherever possible, actual method detections limits determined at AEN-MD are referenced. Other control limits and target detection limits are from published EPA methods. It is our intention to replace published targets with internally determined control limits and detections limits as soon as the results are available.

KEY TO TABLE 5-1

A - Inorganic Methods

B - Metals

C - Method 601

D - Method 602

E - Method 8010

E2 - Method 8011

F - Method 8020

G - Method 8021

H - Method 608

I - Method 8080

J - Method 8015-M

K -

L - Method 8060

M -

N - Method 8150

O - Method 8310

P - Method 8330

Q -

R - Method 624

S - Method 625

T - Method 8240

U - Method 8260

V - Method 8270

W - Method PCBs in Transformer Oil and Waste

X -

Y -

Z - Table of Prep Methods for SW846 Analyses

QUALITY ASSURANCE OBJECTIVES

Method No.	Matrix	Analyte\Component	Precision %RSD^^	Conc. Range	Accuracy %R^^	Conc. Range	MDL▲ mg/L
EPA 310.1	WW, GW, SW, EFF	Alkalinity	20	M	25	M	1
EPA 405.1	WW, GW, SW, EFF	BOD	20	M	25	M	2
EPA 410.1-.3	WW, GW, SW, EFF	COD	20	M	25	M	10
EPA 300.0 325.2 9252A 9056	WW, GW, SW, EFF HW, S Sed	Chloride	20	M	25	M	1
EPA 340.2	GW,SW,EFF, HW, S, Sed	Fluoride	20	M	25	M	.05
EPA 130.2	WW,GW, SW	Hardness	20	M	25	M	1.0
EPA 9176A	WW,GW, SW,HW	Hexavalent Chromium	20	M	25	M	0.05
EPA 150.1 9040A 9045A	WW, GW, SW, HW, S	pH	20	M	25	M	to .1 pH unit
EPA 160.3	WW	Total Solids	20	M	25	M	5
EPA 160.1	WW	Total Dissolved Solids	20	M	25	M	1
EPA 160.2	WW	Total Suspended Solids	20	M	25	M	5
EPA 300.0 375.2 9038 9056	WW, GW, SW, HW Sed, S	Sulfate	20	M	25	M	.05

QUALITY ASSURANCE OBJECTIVES

Method No.	Matrix	Analyte\Component	Precision %RSD^^	Conc. Range	Accuracy %R^^	Conc. Range	MDL▲ mg/L
EPA 420.1 9065	WW, GW, SW, Sed	Phenols	20	M	25	M	.01
EPA 365.2 9065	WW, GW, SW	Phosphorus (all species)	20	M	25	M	5
EPA 413.1 9070 9071	WW, GW, SW, Soils	Oil and Grease	20	M	25	M	1
EPA 418.1	WW, GW, SW, Sed, HW	TPH by IR	20	M	25	M	0.5
EPA 300.0 353.3 9200A	WW, GW SW	Nitrate	20	M	25	M	0.5
EPA 300.0 354.1	WW, GW SW	Nitrite	20	M	25	M	0.5
EPA 353.3	WW	Nitrate-Nitrite	20	M	25	M	N/A
EPA 120.1	WW	Specific Conductance					
EPA 376.1	WW, GW SW	Sulfide	20	M	25	M	2
EPA 377.1	WW, GW SW	Sulfite	20	M	25	M	2
EPA 1010	S, Sed, HW	Flashpoint/ Ignitability	20	M	25	M	to 1F reading*
EPA 335.2 355.1 9010	WW, GW, SW, S, Sed	Cyanide	20	M	25	M	0.02
EPA 9065	GW, SW	Paint Filter Tests	20	M	25	M	P/A
EPA Sec 7.3	GW, SW HW, Sed, S Sed	Reactive Sulfide/CN	20	M	25	M	2/0.02

QUALITY ASSURANCE OBJECTIVES

Method No.	Matrix	Analyte\Component	Precision %RSD^^	Conc. Range	Accuracy %R^^	Conc. Range	MDL▲ mg/L
EPA 9040	GW, SW HW, S, Sed	Corrosivity	20	M	25	M	as pH
EPA 1311	GW, SW Sed, HW	TCLP Extraction	20	M	25	M	N/A
Walkey-Black	Soils, Sed	TOC	20	M	25	M	1,000 mg/kg

^^-QC Targets derived from literature
▲ MDLs derived from literature

QUALITY ASSURANCE OBJECTIVES

Method No.	Matrix	Analyte\Component	Precision %RSD~~	Conc. Range	Accuracy %R^^	Conc. Range	MDL[1] µg/L and mg/kg
EPA Method 6010	GW	Aluminum	20	M	25	M	45▲
200.7	SW	Antimony	20	M	25	M	50
	EFF	Arsenic	20	M	25	M	53▲
	DW	Barium	20	M	25	M	15
		Beryllium	20	M	25	M	.54
		Cadmium	20	M	25	M	2.2
		Calcium	20	M	25	M	10
		Chromium	20	M	25	M	8.4
		Cobalt	20	M	25	M	9.3
		Copper	20	M	25	M	17
		Iron	20	M	25	M	7▲
		Lead	20	M	25	M	42▲
		Magnesium	20	M	25	M	80
		Manganese	20	M	25	M	10
		Nickel	20	M	25	M	5.2
		Potassium	20	M	25	M	120
		Selenium	20	M	25	M	75▲
		Silver	20	M	25	M	7.6
		Sodium	20	M	25	M	310
		Thallium	20	M	25	M	40▲
		Vanadium	20	M	25	M	14
		Zinc	20	M	25	M	10▲

[1]MDL - MDL is dermined using 40 CFR Part 136 Appendix B

~~ - QC Targets dervied from literature

▲ - Values derived from literature

QUALITY ASSURANCE OBJECTIVES

Method No.	Matrix	Analyte\Component	Precision %RSD**	Conc. Range	Accuracy %R^^	Conc. Range	MDL[1] µg/L and mg/kg
EPA METHOD 6010	S	Aluminum	20	M	25	M	45▲
	Sed	Antimony	20	M	25	M	50
	HW	Arsenic	20	M	25	M	53▲
		Barium	20	M	25	M	15
		Beryllium	20	M	25	M	.54
		Cadmium	20	M	25	M	2.2
		Calcium	20	M	25	M	10
		Chromium	20	M	25	M	8.4
		Cobalt	20	M	25	M	9.3
		Copper	20	M	25	M	17
		Iron	20	M	25	M	7▲
		Lead	20	M	25	M	42▲
		Magnesium	20	M	25	M	80
		Manganese	20	M	25	M	10
		Nickel	20	M	25	M	5.2
		Potassium	20	M	25	M	120
		Selenium	20	M	25	M	75▲
		Silver	20	M	25	M	7.6
		Sodium	20	M	25	M	310
		Thallium	20	M	25	M	40▲
		Vanadium	20	M	25	M	14
		Zinc	20	M	25	M	10▲

[1]MDL - MDL is dermined using 40 CFR Part 136 Appendix B

** - QC Targets dervied from literature

▲ - Values derived from literature

QUALITY ASSURANCE OBJECTIVES

Method No.	Matrix	Analyte\Component	Precision %RSD**	Conc. Range	Accuracy %R^^	Conc. Range	MDL[1] µg/L and mg/kg
EPA Method 206.2	GW	Arsenic	20	M	25	M	1.0▲
7060A	SW		20	M	25	M	
	EFF		20	M	25	M	
	S		20	M	25	M	
	Sed		20	M	25	M	
	HW						
204.2	GW	Antimony	20	M	25	M	3.0▲
7041	SW		20	M	25	M	
	EFF		20	M	25	M	
	S		20	M	25	M	
	Sed		20	M	25	M	
	HW						
239.2	GW	Lead	20	M	25	M	1.0▲
7381	SW		20	M	25	M	
	EFF		20	M	25	M	
	S		20	M	25	M	
	Sed		20	M	25	M	
	HW						
270.2	GW	Selenium	20	M	25	M	2.0▲
7740	SW		20	M	25	M	
	EFF		20	M	25	M	
	S		20	M	25	M	
	Sed		20	M	25	M	
	HW						
279.2	GW	Thallium	20	M	25	M	1.0▲
7841	SW		20	M	25	M	
	EFF		20	M	25	M	
	S		20	M	25	M	
	Sed		20	M	25	M	
	HW						

[1]MDL - MDL is dermined using 40 CFR Part 136 Appendix B

** - QC Targets dervied from literature

▲ - Values derived from literature

QUALITY ASSURANCE OBJECTIVES

Method No.	Matrix	Analyte\Component	Precision %RSD**	Conc. Range	Accuracy %R**	Conc. Range	MDL[1] µg/L
EPA Method 601	EFF	Bromodichloromethane	30	M	42-172	L	0.10
		Bromoform	30	M	13-159	L	0.06
		Bromomethane	30	M	D-144	L	0.44
		Carbon tetrachloride	30	M	43-143	L	0.25
		Chlorobenzene	30	M	38-150	L	0.08
		Chloroethenae	30	M	46-137	L	0.23
		2-Chloroethylvinyl ether	30	M	14-186	L	0.18
		Chloroform	30	M	49-133	L	0.16
		Chloromethane	30	M	D-193	L	2.6
		Dibromochloromethane	30	M	24-191	L	0.07
		1,2-Dichlorobenzne	30	M	D-208	L	0.22
		1,3-Dichlorobenzne	30	M	7-187	L	0.28
		1,4-Dichlorobenzne	30	M	42-143	L	0.29
		1,1-Dichlorethane	30	M	47-132	L	0.16
		1,2-Dichloroethane	30	M	51-147	L	0.07
		1,1-Dichloroethene	30	M	28-167	L	0.24
		trans-1,2,-Dichloroethene	30	M	38-155	L	0.18
		1,2-Dichloropropane	30	M	44-146	L	0.10
		cis-1,3-Dichloropropene	30	M	22-178	L	0.11
		trans-1,3-Dichloropropene	30	M	22-178	L	0.09
		Methylene chloride	30	M	25-162	L	0.50
		1,1,2,2-Tetrachloroethane	30	M	8-184	L	0.06
		Tetrachloroethene	30	M	26-162	L	0.23
		1,1,1-Trichloroethane	30	M	41-138	L	0.17
		1,1,2-Trichloroethane	30	M	39-136	L	0.09
		Trichloroethene	30	M	35-146	L	0.19
		Trichlorofluoromethane	30	M	21-156	L	0.44
		Vinyl chloride	30	M	28-163	L	0.30

[1]MDL - MDLs are determined using 40 CFR Part 136 Apppendix B

** - QC targets derived from literature

▲ - Values derived from literature

QUALITY ASSURANCE OBJECTIVES

Method No.	Matrix	Analyte\Component	Precision %RSD**	Conc. Range	Accuracy %R**	Conc. Range	MDL[1] µg/L
EPA Method 602	EFF	Benzene	30	M	39-150	L	0.21
		Chlorobenzene	30	M	55-135	L	0.25
		1,2-Dichlorobenzene	30	M	37-154	L	0.19
		1,3-Dichlorobenzene	30	M	50-141	L	0.18
		1,4-Dichlorobenzene	30	M	42-143	L	0.27
		Ethylbenzene	30	M	32-160	L	0.20
		Toluene	30	M	46-148	L	0.40
		m+p Xylene	30	M	32-160	L	0.32
		o-Xylene	30	M	32-160	L	0.16

[1]MDL - MDLs are determined using 40 CFR Part 136 Apppendix B

** - QC targets derived from literature

▲ - Values derived from literature

QUALITY ASSURANCE OBJECTIVES

Method No.	Matrix	Analyte\Component	Precision %RSD^^	Conc. Range	Accuracy %R^^	Conc. Range	MDL[1] µg/L and mg/kg
EPA Method 8010	GW	Benzyl chloride	30	M	30	M	0.23
	SW	Bromobenzene	30	M	30	M	0.84
		Bromodichloromethane	30	M	30	M	0.097
		Bromoform	30	M	30	M	0.058
		Bromomethane	30	M	30	M	0.44
		Carbon tetrachloride	30	M	30	M	0.25
		Chlorobenzene	30	M	30	M	0.24
		Chloroethane	30	M	30	M	0.23
		2-Chloroethylvinyl ether	30	M	30	M	0.18
		Chloroform	30	M	30	M	0.16
		Chloromethane	30	M	30	M	2.6
		Dibromochloromethane	30	M	30	M	0.069
		Dibromomethane	30	M	30	M	0.081
		1,2-Dichlorobenzene	30	M	30	M	0.22
		1,3-Dichlorobenzene	30	M	30	M	0.23
		1,4-Dichlorobenzene	30	M	30	M	0.29
		Dichlorodifluoromethane	30	M	30	M	1.0
		1,1-Dichloroethane	30	M	30	M	0.16
		1,2-Dichloroethane	30	M	30	M	0.16
		1,1-Dichloroethene	30	M	30	M	0.24
		trans-1,2 Dichloroethene	30	M	30	M	0.18
		Dichloromethane	30	M	30	M	1.0
		1,2-Dichloropropane	30	M	30	M	0.10
		cis-1,3-Dichloropropene	30	M	30	M	0.11
		trans-1,3-Dichloropropene	30	M	30	M	0.092
		1,1,2,2-Tetrachloroethane	30	M	30	M	0.061
		1,1,1,2-Tetrachloroethane	30	M	30	M	0.14
		Tetrachloroethene	30	M	30	M	0.23
		1,1,1-Trichloroethane	30	M	30	M	0.17
		1,1,2-Trichloroethane	30	M	30	M	0.091
		Trichloroethene	30	M	30	M	0.19
		Trichlorofluoromethane	30	M	30	M	0.44
		1,2,3-Trichloropropane	30	M	30	M	0.055
		Vinyl chloride	30	M	30	M	0.30

[1]MDL - MDL is demined using 40 CFR Part 136 Appendix B

^^ - QC Targets dervied from literature

▲ - Values derived from literature

QUALITY ASSURANCE OBJECTIVES

Method No.	Matrix	Analyte\Component	Precision %RSD^^	Conc. Range	Accuracy %R^^	Conc. Range	MDL[1] µg/L and mg/kg
8010	S	Benzyl chloride	35	M	30	L	0.38
	Sed	Bromobenzene	35	M	30	L	0.15
	HW	Bromodichloromethane	35	M	30	L	0.18
		Bromoform	35	M	30	L	0.22
		Bromomethane	35	M	30	L	0.90
		Carbon tetrachloride	35	M	30	L	0.38
		Chlorobenzene	35	M	30	L	0.41
		Chloroethane	35	M	30	L	0.63
		2-Chloroethylvinyl ether	35	M	30	L	0.23
		Chloroform	35	M	30	L	0.26
		Chloromethane	35	M	30	L	0.69
		Dibromochloromethane	35	M	30	L	0.18
		Dibromomethane	35	M	30	L	0.13
		1,2-Dichlorobenzene	35	M	30	L	0.38
		1,3-Dichlorobenzene	35	M	30	L	0.42
		1,4-Dichlorobenzene	35	M	30	L	0.42
		Dichloroifluoromethane	35	M	30	L	1.0
		1,1-Dichloroethane	35	M	30	L	0.18
		1,2-Dichloroethane	35	M	30	L	0.14
		1,1-Dichloroethene	35	M	30	L	0.44
		trans-1,2-Dichloroethene	35	M	30	L	0.37
		Dichloromethane	35	M	30	L	4.7
		1,2-Dichloropropane	35	M	30	L	0.18
		cis-1,3-Dichloropropene	35	M	30	L	0.21
		trans-1,3-Dichloropropene	35	M	30	L	0.18
		1,1,2,2-Tetrachloroethane	35	M	30	L	0.29
		1,1,1,2-Tetrachloroethane	35	M	30	L	0.24
		Tetrachloroethene	35	M	30	L	0.41
		1,1,1-Trichloroethane	35	M	30	L	0.38
		1,1,2-Trichloroethane	35	M	30	L	0.15
		Trichloroethene	35	M	30	L	0.30
		Trichlorofluoromethane	35	M	30	L	0.97
		1,2,3-Trichloropropane	35	M	30	L	0.36
		Vinyl chloride	35	M	30	L	0.67

[1]MDL - MDL is dermined using 40 CFR Part 136 Appendix B

^^ - QC Targets dervied from literature

▲ - Values derived from literature

QUALITY ASSURANCE OBJECTIVES

Method No.	Matrix	Analyte\Component	Precision %RSD**	Conc. Range	Accuracy %R**	Conc. Range	MDL µg/L ▲
EPA Method 8011	DW	1,2-Dibromoethane	30	M	30	L	0.01
	GW	1,2-Dibromo-3-chloropropane	30	M	30	L	0.01
	S						
	Sed						
	HW						

** - QC targets derived from literature

▲ - Values derived from literature

QUALITY ASSURANCE OBJECTIVES

Method No.	Matrix	Analyte\Component	Precision %RSD**	Conc. Range	Accuracy %R**	Conc. Range	MDL[1] µg/L and mg/kg
EPA Method 8020	GW	Benzene	30	M	39-150	L	0.21
	SW	Chlorobenzene	30	M	55-135	L	0.25
		1,4-Dichlorobenzene	30	M	37-154	L	0.27
		1,3-dichlorobezene	30	M	50-141	L	0.18
		1,2-Dichlorobenzene	30	M	42-143	L	0.19
		Ethyl benzene	30	M	32-160	L	0.20
		Toluene	30	M	46-148	L	0.38
		Xylenes	30	M	32-160	L	0.48
EPA Method 8020	S	Benzene	30	M	39-150	L	0.22
	Sed	Chlorobenzene	30	M	55-135	L	0.47
	HW	1,4-Dichlorobenzene	30	M	37-154	L	0.38
		1,3-dichlorobezene	30	M	50-141	L	0.38
		1,2-Dichlorobenzene	30	M	42-143	L	0.37
		Ethyl benzene	30	M	32-160	L	0.26
		Toluene	30	M	46-148	L	0.23
		Xylenes	30	M	32-160	L	0.72

[1]MDL - MDL is dermined using 40 CFR Part 136 Appendix B

** - QC Targets dervied from literature

▲ - Values derived from literature

QUALITY ASSURANCE OBJECTIVES

Method No.	Matrix	Analyte\Component	Precision %RSD**	Conc. Range	Accuracy %R**	Conc. Range	MDL µg/L ▲
EPA Method 8021	GW	Dichlorodifluoromethane	30	M	30	M	0.05
	SW	Chloromethane	30	M	30	M	0.03
	S	Vinyl chloride	30	M	30	M	0.02
	Sed	Bromomethane	30	M	30	M	1.1
	HW	Chloroethane	30	M	30	M	0.1
		Trichlorofluoromethane	30	M	30	M	0.03
		1,1-Dichloroethene	30	M	30	M	0.07
		Methylene chloride	30	M	30	M	0.02
		trans-1,2-Dichloroethene	30	M	30	M	0.05
		1,1-Dichloroethane	30	M	30	M	0.07
		2,2-Dichloropropane	30	M	30	M	0.05
		cis-1,2-Dichloroethane	30	M	30	M	0.02
		Chloroform	30	M	30	M	0.02
		Bromochloromethane	30	M	30	M	0.01
		1,1,1-Trichloroethane	30	M	30	M	0.03
		1,1-Dichloropropene	30	M	30	M	0.02
		Carbon tetrachloride	30	M	30	M	0.01
		Benzene	30	M	30	M	0.01
		1,2-Dichloroethane	30	M	30	M	0.03
		Trichloroethene	30	M	30	M	0.02
		1,2-Dichloropropane	30	M	30	M	0.01
		Bromodichloromethane	30	M	30	M	0.02
		Dibromomethane	30	M	30	M	2.2
		Toluene	30	M	30	M	0.01
		1,1,2-Trichloroethane	30	M	30	M	0.03
		Tetrachloroethene	30	M	30	M	0.04
		1,3-Dichloropropane	30	M	30	M	0.03
		Dibromochloromethane	30	M	30	M	0.03
		1,2-Dibromoethane	30	M	30	M	0.8
		Chlorobenzene	30	M	30	M	0.01
		Ethylbenzene	30	M	30	M	0.01
		1,1,1,2-Tetrachloroethane	30	M	30	M	0.01
		m-Xylene	30	M	30	M	0.01
		p-Xylene	30	M	30	M	0.01
		o-Xylene	30	M	30	M	0.02
		Styrene	30	M	30	M	0.01
		Isopropylbenzene	30	M	30	M	0.05
		Bromoform	30	M	30	M	1.6
		1,1,2,2-Tetrachloroethane	30	M	30	M	0.01
		1,2,3-Trichloropropane	30	M	30	M	0.4
		n-Propylbenzene	30	M	30	M	0.01
		Bromobenzene	30	M	30	M	0.01
		1,3,5-Trimethylbenzene	30	M	30	M	0.01

QUALITY ASSURANCE OBJECTIVES

Method No.	Matrix	Analyte\Component	Precision %RSD**	Conc. Range	Accuracy %R**	Conc. Range	MDL µg/L ▲
EPA Method 8021	GW	2-Chlorotoluene	30	M	30	M	0.01
	SW	4-Chlorotoluene	30	M	30	M	0.02
	S	tert-Butylbenzene	30	M	30	M	0.06
	Sed	1,2,4-Trimethylbenzene	30	M	30	M	0.05
	HW	sec-Butylbenzene	30	M	30	M	0.02
		p-Isopropyltoluene	30	M	30	M	0.01
		1,3-Dichlorobenzene	30	M	30	M	0.02
		1,4-Dichlorobenzene	30	M	30	M	0.01
		n-Butylbenzene	30	M	30	M	0.02
		1,2-Dichlorobenzenee	30	M	30	M	0.05
		1,2-Dibromo-3-Chlorpropane	30	M	30	M	3.0
		1,2,4-Trichlorobenzene	30	M	30	M	0.03
		Hexachlorobutadiene	30	M	30	M	0.06
		Naphthalene	30	M	30	M	0.06
		1,2,3-Trichlorobenzene	30	M	30	M	0.03

** - QC targets derived from literature

▲ - Values derived from literature

QUALITY ASSURANCE OBJECTIVES

Method No.	Matrix	Analyte\Component	Precision %RSD**	Conc. Range	Accuracy %R**	Conc. Range	MDL[1] µg/L and mg/kg
EPA Method 608	EFF	Aldrin	20	M	42-122	M	0.031
		α-BHC	20	M	37-134	M	0.034
		ß-BHC	20	M	17-147	M	0.051
		δ-BHC	20	M	19-140	M	0.036
		γ-BHC	20	M	32-127	M	0.032
		Chlordane (technical)	20	M	45-119	M	0.014▲
		4,4'-DDD	20	M	31-141	M	0.031
		4,4'-DDE	20	M	30-145	M	0.10
		4,4'-DDT	20	M	25-160	M	0.35
		Dieldrin	20	M	36-146	M	0.046
		Endosulfan I	20	M	45-153	M	0.053
		Endosulfan II	20	M	D-202	M	0.071
		Endosulfan sulfate	20	M	26-144	M	0.23
		Endrin	20	M	30-147	M	0.074
		Endrin aldehyde	20	M	30-147	M	0.035
		Heptachlor	20	M	34-111	M	0.034
		Heptachlor epoxide	20	M	37-142	M	0.031
		Methoxychlor	20	M	30-170	M	0.18▲
		Toxaphene	20	M	41-126	M	0.25▲
		PCB-1016	20	M	50-114	M	0.55
		PCB-1221	20	M	15-178	M	0.55▲
		PCB-1232	20	M	10-215	M	0.55▲
		PCB-1242	20	M	39-150	M	0.55▲
		PCB-1248	20	M	38-158	M	0.55▲
		PCB1254	20	M	29-131	M	0.67▲
		PCB-1260	20	M	8-127	M	0.67
		α-Chlordane	20	M	45-117	M	0.05
		γ-Chlordane	20	M	45-117	M	0.05
		Endrin ketone	20	M	30-147	M	0.035▲

[1]MDL - MDLs are determined using 40 CFR Part 136 Apppendix B

** - QC targets derived from literature

▲ - Values derived from literature

QUALITY ASSURANCE OBJECTIVES

Method No.	Matrix	Analyte\Component	Precision %RSD**	Conc. Range	Accuracy %R**	Conc. Range	MDL[1] µg/L and mg/kg
EPA Method 8080	SW	Aldrin	20	M	25	M	0.031
	GW	α-BHC	20	M	25	M	0.034
		ß-BHC	20	M	25	M	0.051
		δ-BHC	20	M	25	M	0.036
		γ-BHC	20	M	25	M	0.032
		Chlordane (technical)	20	M	25	M	0.014▲
		4,4'-DDD	20	M	25	M	0.031
		4,4'-DDE	20	M	25	M	0.10
		4,4'-DDT	20	M	25	M	0.35
		Dieldrin	20	M	25	M	0.046
		Endosulfan I	20	M	25	M	0.053
		Endosulfan II	20	M	25	M	0.071
		Endosulfan sulfate	20	M	25	M	0.23
		Endrin	20	M	25	M	0.074
		Endrin aldehyde	20	M	25	M	0.035
		Heptachlor	20	M	25	M	0.034
		Heptachlor epoxide	20	M	25	M	0.031
		Methoxychlor	20	M	25	M	0.18▲
		Toxaphene	20	M	25	M	0.25▲
		PCB-1016	20	M	25	M	0.55
		PCB-1221	20	M	25	M	0.55▲
		PCB-1232	20	M	25	M	0.55▲
		PCB-1242	20	M	25	M	0.55▲
		PCB-1248	20	M	25	M	0.55▲
		PCB-1254	20	M	25	M	0.67▲
		PCB-1260	20	M	25	M	0.67
		α-Chlordane	20	M	25	M	0.05
		γ-Chlordane	20	M	25	M	0.05
		Endrin ketone	20	M	25	M	0.035▲

[1]MDL - MDL is dermined using 40 CFR Part 136 Appendix B

** - QC targets dervied from literature

▲ - Values derived from literature

QUALITY ASSURANCE OBJECTIVES

Method No.	Matrix	Analyte\Component	Precision %RSD**	Conc. Range	Accuracy %R**	Conc. Range	MDL[1] mg/kg▲
EPA Method 8080	S	Aldrin	20	M	25	M	21
	Sed	α-BHC	20	M	25	M	23
	HW	ß-BHC	20	M	25	M	34
		δ-BHC	20	M	25	M	24
		γ-BHC	20	M	25	M	21
		Chlordane (technical)	20	M	25	M	9.4
		4,4'-DDD	20	M	25	M	21
		4,4'-DDE	20	M	25	M	67
		4,4'-DDT	20	M	25	M	234
		Dieldrin	20	M	25	M	31
		Endosulfan I	20	M	25	M	36
		Endosulfan II	20	M	25	M	48
		Endosulfan sulfate	20	M	25	M	154
		Endrin	20	M	25	M	50
		Endrin aldehyde	20	M	25	M	23
		Heptachlor	20	M	25	M	23
		Heptachlor epoxide	20	M	25	M	21
		Methoxychlor	20	M	25	M	120
		Toxaphene	20	M	25	M	170
		PCB-1016	20	M	25	M	370
		PCB-1221	20	M	25	M	370
		PCB-1232	20	M	25	M	370
		PCB-1242	20	M	25	M	370
		PCB-1248	20	M	25	M	370
		PCB-1254	20	M	25	M	450
		PCB-1260	20	M	25	M	450
		αChlordane	20	M	25	M	34
		γ-Chlordane	20	M	25	M	34
		Endrin ketone	20	M	25	M	23

[1]MDL - MDLs are determined using 40 CFR Part 136 Apppendix B

** - QC targets derived from literature

▲ - Values derived from literature

QUALITY ASSURANCE OBJECTIVES

Method No.	Matrix	Analyte\Component	Precision %RSD	Conc. Range	Accuracy %R	Conc. Range	MDL[1] mg/L and mg/kg
EPA Method 8015-Modified	GW	Gasoline Range Organics	40	M	40	M	0.10
	SW	Diesel Range Organics	40	M	40	M	0.20
	Soil	Gasoline Range Organics	40	M	40	M	0.10
	Sed	Diesel Range Organics	40	M	40	M	10

" - QC Targets dervied from literature

▲ - Values derived from literature

QUALITY ASSURANCE OBJECTIVES

Method No.	Matrix	Analyte\Component	Precision %RSD**	Conc. Range	Accuracy %R**	Conc. Range	MDL▲ µg/L and mg/kg
EPA Method 8060	GW	Benzyl butyl phthalate	50	M	D-158	M	0.34
	SW	Bis(2-Ethylhexyl)phthalate	50	M	30-136	M	2.0
	S	Di-n-butyl phthalate	50	M	23-136	M	0.36
	Sed	Diethyl phthalate	50	M	D-149	M	0.49
	HW	Dimethyl phthalate	50	M	D-156	M	0.29
		Di-n-octyl phthalate	50	M	D-114	M	3.0
EPA Method 8060	GW	Benzyl butyl phthalate	50	M	D-158	M	230
	SW	Bis(2-Ethylhexyl)phthalate	50	M	30-136	M	1300
	S	Di-n-butyl phthalate	50	M	23-136	M	240
	Sed	Diethyl phthalate	50	M	D-149	M	330
	HW	Dimethyl phthalate	50	M	D-156	M	190
		Di-n-octyl phthalate	50	M	D-114	M	2000

** - QC Targets dervied from literature

▲ - Values derived from literature

QUALITY ASSURANCE OBJECTIVES

Method No.	Matrix	Analyte\Component	Precision %RSD**	Conc. Range	Accuracy %R**	Conc. Range	MDL▲ µg/L and mg/kg
EPA Method 8150	GW	2,4D	50	M	50-150	M	1.2
	SW	2,4-DB	50	M	50-150	M	0.91
	Eff	2,4,5-TP	50	M	50-150	M	0.20
	Soil	2,4,5-T	50	M	50-150	M	0.17
	Sed	Dalapon	50	M	50-150	M	5.8
		Dicamba	50	M	50-150	M	0.27
		Dichloroprop	50	M	50-150	M	0.65
		Dinoseb	50	M	50-150	M	0.07
		MCPA	50	M	50-150	M	249
		MCPP	50	M	50-150	M	192

** - QC Targets dervied from literature

▲ - Values derived from literature

QUALITY ASSURANCE OBJECTIVES

Method No.	Matrix	Analyte\Component	Precision %RSD**	Conc. Range	Accuracy %R**	Conc. Range	MDL▲ µg/L and mg/kg
EPA Method 8310	GW	Naphthalene	30	M	30	M	1.8
	SW	Acenaphthylene	30	M	30	M	2.3
		Acenaphthene	30	M	30	M	1.8
		Fluorene	30	M	30	M	0.21
		Phenanthrene	30	M	30	M	0.64
		Anthracene	30	M	30	M	0.66
		Fluoranthrene	30	M	30	M	0.21
		Pyrene	30	M	30	M	0.27
		Benzo(a)anthracene	30	M	30	M	0.013
		Chrysene	30	M	30	M	0.15
		Benzo(b)fluoranthene	30	M	30	M	0.018
		Benzo(k)fluoroanthene	30	M	30	M	0.017
		Benzo(a)pyrene	30	M	30	M	0.023
		Dibenzo(a,h)anthracene	30	M	30	M	0.030
		Benzo(g,h,i)perylene	30	M	30	M	0.076
		Indeno(1,2,,3-cd)pyrene	30	M	30	M	0.043

QUALITY ASSURANCE OBJECTIVES

Method No.	Matrix	Analyte\Component	Precision %RSD**	Conc. Range	Accuracy %R**	Conc. Range	MDL▲ µg/L and mg/kg
EPA Method 8310	S	Naphthalene	30	M	30	M	1200
	Sed	Acenaphthylene	30	M	30	M	1500
	HW	Acenaphthene	30	M	30	M	1200
		Fluorene	30	M	30	M	140
		Phenanthrene	30	M	30	M	440
		Anthracene	30	M	30	M	440
		Fluoranthrene	30	M	30	M	1200
		Pyrene	30	M	30	M	180
		Benzo(a)anthracene	30	M	30	M	8.7
		Chrysene	30	M	30	M	100
		Benzo(b)fluoranthene	30	M	30	M	12
		Benzo(k)fluoroanthene	30	M	30	M	11
		Benzo(a)pyrene	30	M	30	M	15
		Dibenzo(a,h)anthracene	30	M	30	M	20
		Benzo(g,h,i)perylene	30	M	30	M	51
		Indeno(1,2,,3-cd)pyrene	30	M	30	M	29

** - QC Targets dervied from literature

▲ - Values derived from literature

QUALITY ASSURANCE OBJECTIVES

Method No.	Matrix	Analyte\Component	Precision %RSD**	Conc. Range	Accuracy %R**	Conc. Range	MDL[1] µg/L and mg/kg
EPA Method 8330 (Low-Level, salting out)	GW SW	Octahydro-1,3,5,7-tetranitro-1,3,5,7-tetraazocine (HMX)	20	M	25	M	0.28
		Hexahydro-1,3,5-trinitro-1,3,5-triazine (RDX)	20	M	25	M	0.34
		1,3,5-Trimitrobenzene (1,3,5-TNB)	20	M	25	M	0.23
		1,3-Ditritobenzene (1,3-DNB)	20	M	25	M	0.19
		Methyl-2,4,6-trinitrophenylnitramine (tetryl)	20	M	25	M	0.25
		Nitrobenzene (NB)	20	M	25	M	0.17
		2,4,6-Trimitrotoluene 2,4,6-TNT)	20	M	25	M	0.22
		4-Amino-2,6-dinitrotoluene (4-Am-DNT)	20	M	25	M	0.060▲
		2-Amino-4,6-dinitrotoluene (2-Am-DNT)	20	M	25	M	0.035▲
		2,4-Dinitrotoluene (2,4-DNT)	20	M	25	M	0.24
		2,6-Dinitrotoluene (2,6-DNT)	20	M	25	M	0.19
		2-Nitrotoluene (2-NT)	20	M	25	M	0.25
		3-Nitrotoluene (3-NT)	20	M	25	M	0.18
		4-Nitrotoluene (4-NT)	20	M	25	M	0.27

QUALITY ASSURANCE OBJECTIVES

Method No.	Matrix	Analyte\Component	Precision %RSD**	Conc. Range	Accuracy %R**	Conc. Range	MDL[1] µg/L and mg/kg
EPA Method 8330 (High-Level)	GW SW	Octahydro-1,3,5,7-tetranitro-1,3,5,7-tetraazocine (HMX)	20	M	25	M	13
		Hexahydro-1,3,5-trinitro-1,3,5-triazine (RDX)	20	M	25	M	14
		1,3,5-Trimitrobenzene (1,3,5-TNB)	20	M	25	M	7.3
		1,3-Ditritobenzene (1,3-DNB)	20	M	25	M	4.0
		Methyl-2,4,6-trinitrophenylnitramine (tetryl)	20	M	25	M	4.0
		Nitrobenzene (NB)	20	M	25	M	6.4
		2,4,6-Trimitrotoluene 2,4,6-TNT)	20	M	25	M	6.9
		4-Amino-2,6-dinitrotoluene (4-Am-DNT)	20	M	25	M	13
		2-Amino-4,6-dinitrotoluene (2-Am-DNT)	20	M	25	M	13
		2,4-Dinitrotoluene (2,4-DNT)	20	M	25	M	9.4
		2,6-Dinitrotoluene (2,6-DNT)	20	M	25	M	5.7
		2-Nitritoluene (2-NT)	20	M	25	M	12
		3-Nitrotoluene (3-NT)	20	M	25	M	8.5
		4-Nitrotoluene (4-NT)	20	M	25	M	7.9

QUALITY ASSURANCE OBJECTIVES

Method No.	Matrix	Analyte\Component	Precision %RSD**	Conc. Range	Accuracy %R**	Conc. Range	MDL▲ µg/L and mg/kg
EPA Method 8330	S Sed HW	Octahydro-1,3,5,7-tetranitro-1,3,5,7-tetraazocine (HMX)	20	M	25	M	2.2
		Hexahydro-1,3,5-trinitro-1,3,5-triazine (RDX)	20	M	25	M	1.0
		1,3,5-Trimitrobenzene (1,3,5-TNB)	20	M	25	M	0.25
		1,3-Ditritobenzene (1,3-DNB)	20	M	25	M	0.25
		Methyl-2,4,6-trinitrophenylnitramine (tetryl)	20	M	25	M	0.65
		Nitrobenzene (NB)	20	M	25	M	0.26
		2,4,6-Trimitrotoluene 2,4,6-TNT)	20	M	25	M	0.25
		4-Amino-2,6-dinitrotoluene (4-Am-DNT)	20	M	25	M	0.25
		2-Amino-4,6-dinitrotoluene (2-Am-DNT)	20	M	25	M	0.25
		2,4-Dinitrotoluene (2,4-DNT)	20	M	25	M	0.25
		2,6-Dinitrotoluene (2,6-DNT)	20	M	25	M	0.25
		2-Nitroltouene (2-NT)	20	M	25	M	0.25
		3-Nitrotoluene (3-NT)	20	M	25	M	0.25
		4-Nitrotoluene (4-NT)	20	M	25	M	0.25

[1]MDL - MDL is dermined using 40 CFR Part 136 Appendix B

** - QC Targets dervied from literature

▲ - Values derived from literature

QUALITY ASSURANCE OBJECTIVES

Method No.	Matrix	Analyte\Component	Precision %RSD	Conc. Range	Accuracy %R	Conc. Range	MDL[1] µg/L and mg/kg
EPA Method 624	EFF	Benzene	25	M	37-151	M	0.73
		Bromodichloromethane	25	M	35-155	M	0.67
		Bromoform	25	M	45-169	M	0.88
		Bromomethane	25	M	D-242	M	1.1
		Carbontetrachloride	25	M	70-140	M	0.97
		Chlorobenzene	25	M	37-160	M	0.74
		Chloroethane	25	M	14-230	M	1.3
		2-Chlorovinylether	25	M	D-305	M	0.61
		Chloroform	25	M	51-138	M	1.1
		Chloromethane	25	M	D-273	M	1.3
		Dibromochloromethane	25	M	53-149	M	0.63
		1,2-Dichlorobenzene	25	M	18-190	M	1.7
		1,3-Dichlorobenzene	25	M	59-156	M	1.2
		1,4-Dichlorobenzene	25	M	18-190	M	1.4
		1,1-Dichloroethane	25	M	59-155	M	1.1
		1,2-Dichlorethane	25	M	49-155	M	0.84
		1,1-Dichloroethene	25	M	D-234	M	1.0
		trans-1,2-Dichloroethene	25	M	54-156	M	1.1
		1,2-Dichloropropane	25	M	D-210	M	0.94
		cis-1,3-Dichloropropene	25	M	D-227	M	1.2
		trans-1,3-Dichloropropene	25	M	17-183	M	1.2
		Ethylbenzene	25	M	37-162	M	1.2
		Methylene chloride	25	M	D-221	M	3.6
		1,1,2,2-Tetrachloroethane	25	M	46-157	M	0.63
		Tetrachloroethene	25	M	64-148	M	0.95
		Toluene	25	M	47-150	M	0.77
		1,1,1-Trichloroethane	25	M	52-162	M	0.88
		1,1,2-Trichloroethane	25	M	52-150	M	0.89
		Trichloroethene	25	M	71-157	M	0.91
		Trichlorofluoromethane	25	M	17-181	M	1.0
		Vinyl chloride	25	M	D-251	M	1.6

[1]MDL - MDL is dermined using 40 CFR Part 136 Appendix B

" - QC Targets dervied from literature

▲ - Values derived from literature

QUALITY ASSURANCE OBJECTIVES

Method No.	Matrix	Analyte\Component	Precision %RSD**	Conc. Range	Accuracy %R**	Conc. Range	MDL[1] µg/L and mg/kg
EPA Method 625	EFF	Acenaphthene	25	M	47-145	M	2.2
		Acenaphthylene	25	M	33-145	M	2.1
		Anthracene	25	M	27-133	M	2.4
		Benzo(a)anthracene	25	M	33-143	M	2.3
		Benzo(b)fluoranthene	25	M	24-159	M	1.4
		Benzo(k)fluoranthene	25	M	11-162	M	3.6
		Benzo(a)pyrene	25	M	17-163	M	2.7
		Benzo(g,h,i)perylene	25	M	D-219	M	3.6
		Benzylbutylphthalate	25	M	D-152	M	4.4
		Bis(2-chloroethyl)ether	25	M	12-158	M	2.7
		Bis(2-chloroethoxy)methane	25	M	33-184	M	2.3
		Bis(2-chloroisopropyl)ether	25	M	36-166	M	2.7
		Bis(2-ethylhexyl)phthalate	25	M	8-158	M	1.9
		4-Bromophenylphenylether	25	M	53-127	M	6.2
		2-Chloronaphthalene	25	M	60-118	M	2.2
		4-Chlorophenylphenylether	25	M	25-158	M	2.8
		Dibenzo(a,h)anthracene	25	M	D-227	M	3.0
		Di-n-butylphthalate	25	M	1-118	M	3.6
		1,2-Dichlorobenzene	25	M	32-129	M	1.7
		1,3-Dichlorobenzene	25	M	D-172	M	1.7
		1,4-Dichlorobenzene	25	M	20-124	M	2.0
		3,3'-Dichlorobenzidine	25	M	D-262	M	2.8
		Diethylphthalate	25	M	D-114	M	3.0
		Dimethylphthalate	25	M	D-112	M	3.0▲
		2,4-Dinitrotoluene	25	M	39-139	M	2.4
		2,6-Dinitrotoluene	25	M	50-158	M	2.7
		Di-n-octylphthalate	25	M	4-146	M	4.7
		Fluoranthene	25	M	26-137	M	2.4
		Fluorene	25	M	59-121	M	2.2
		Hexachlorobenzene	25	M	D-152	M	5.2
		Hexachlorobutadiene	25	M	24-116	M	2.1
		Hexachloroethane	25	M	40-113	M	1.6
		Indeno(1,2,3-cd)pyrene	25	M	D-171	M	2.5
		Isophorone	25	M	21-196	M	2.7
		Nathalene	25	M	21-133	M	2.1
		Nitrobenzene	25	M	35-180	M	2.1
		N-Nitrosodi-n-propylamine	25	M	D-230	M	2.1

QUALITY ASSURANCE OBJECTIVES

Method No.	Matrix	Analyte\Component	Precision %RSD**	Conc. Range	Accuracy %R**	Conc. Range	MDL[1] µg/L and mg/kg
EPA Method 625	EFF	Phenanthrene	25	M	54-120	M	2.4
		Pyrene	25	M	52-115	M	2.5
		1,2,4-Trichlorobenzene	25	M	44-142	M	2.1
		4-Chloro-3-Methylphenol	25	M	22-142	M	3.3
		2-Chlorophenol	25	M	23-134	M	3.5
		2,4-Dichlorophenol	25	M	39-135	M	3.4
		2,4-Dimethylphenol	25	M	32-119	M	4.0
		2,4-Dinitrophenol	25	M	D-191	M	3.0▲
		2-Methyl-4,6-dinitrophenol	25	M	D-181	M	3.0
		2-Nitrophenol	25	M	29-182	M	2.9
		4-Nitrophenol	25	M	D-132	M	1.6
		Pentachlorophenol	25	M	14-176	M	5.4
		Phenol	25	M	5-112	M	1.8
		2,4,6-Trichlorophenol	25	M	37-144	M	3.4

[1]MDL - MDL is dermined using 40 CFR Part 136 Appendix B

** - QC Targets dervied from literature

▲ - Values derived from literature

QUALITY ASSURANCE OBJECTIVES

Method No.	Matrix	Analyte\Component	Precision %RSD	Conc. Range	Accuracy %R	Conc. Range	MDL[1] µg/L and mg/kg
EPA Method 8240	GW	Acetone	30	M	30	L	1.1
	SW	Acetonitrile	30	M	30	L	1.9
	S	Allyl Chloride	30	M	30	L	5.0▲
	Sed	Benzene	30	M	30	L	0.73
	HW	Benzyl chloride	30	M	30	L	5.0▲
		Bromodichloromethane	30	M	30	L	0.67
		Bromoform	30	M	30	L	0.88
		Bromomethane	30	M	30	L	1.1
		2-Butanone	30	M	30	L	3.8
		Carbon disulfide	30	M	30	L	1.4
		Carbon tetrachloride	30	M	30	L	0.97
		Chlorobenzene	30	M	30	L	0.74
		Chlorodibromomethane	30	M	30	L	0.67
		Chloroethane	30	M	30	L	1.3
		2-Chloroethylvinyl ether	30	M	30	L	0.61
		Chloroform	30	M	30	L	1.1
		Chloromethane	30	M	30	L	1.3
		Chloroprene	30	M	30	L	5.0▲
		1,2-Dibromo-3-chloropropane	30	M	30	L	100▲
		Dibromoethane	30	M	30	L	5.0▲
		1,2-Dibromomethane	30	M	30	L	5.0▲
		1,4-Dichloro-2-butene	30	M	30	L	100▲
		Dichlorodifluoromethane	30	M	30	L	0.63
		1,1-Dichloroethane	30	M	30	L	1.1
		1,2-Dichloroethane	30	M	30	L	0.84
		1,1-Dichloroethene	30	M	30	L	1.0
		trans-1,2-Dichloroethene	30	M	30	L	1.1
		1,2-Dichloropropane	30	M	30	L	0.94
		cis-1,3-Dichloropropene	30	M	30	L	1.2
		trans-1,3-Dichloropropene	30	M	30	L	1.2
		Ethylbenzene	30	M	30	L	1.2
		Ethyl Methacrylate	30	M	30	L	100▲
		2-Hexanone	30	M	30	L	2.8
		Isobutyl alcohol	30	M	30	L	100▲
		Methacrylonitrile	30	M	30	L	100▲
		Methylene chloride	30	M	30	L	3.6
		Methyl iodide	30	M	30	L	5.0▲
		Methyl methacrylate	30	M	30	L	50▲
		4-Methyl-2-pentanone	30	M	30	L	2.4

QUALITY ASSURANCE OBJECTIVES

Method No.	Matrix	Analyte\Component	Precision %RSD	Conc. Range	Accuracy %R	Conc. Range	MDL[1] µg/L and mg/kg
EPA Method 8240	GW	Pentachloroethane	30	M	30	L	10▲
	SW	Proprionitrile	30	M	30	L	100▲
	S	Styrene	30	M	30	L	0.77
	Sed	1,1,1,2-Tetrachloroethane	30	M	30	L	5.0▲
	HW	1,1,2,2-Tetrachloroethane	30	M	30	L	0.63
		Tetrachloroethene	30	M	30	L	0.95
		Toluene	30	M	30	L	0.77
		1,1,1-Trichloroethene	30	M	30	L	0.88
		1,1,2-Trichloroethene	30	M	30	L	0.89
		Trichloroethene	30	M	30	L	0.91
		1,2,3-Trichloropropane	30	M	30	L	5.0▲
		Vinyl acetate	30	M	30	L	0.79
		Vinyl chloride	30	M	30	L	1.6
		Xylenes (total)	30	M	30	L	4.6

[1]MDL - MDL is dermined using 40 CFR Part 136 Appendix B

" - QC Targets dervied from literature

▲ - Values derived from literature

QUALITY ASSURANCE OBJECTIVES

Method No.	Matrix	Analyte\Component	Precision %RSD	Conc. Range	Accuracy %R	Conc. Range	MDL[1] µg/L and mg/kg
EPA Method 8260	GW	Benzene	30	M	30	L	0.36
	SW	Bromobenzene	30	M	30	L	0.25
	Soil	Bromochloromethane	30	M	30	L	0.61
	Sed	Bromodichloromethane	30	M	30	L	0.54
		Bromoform	30	M	30	L	0.72
		Bromomethane	30	M	30	L	1.0
		n-butylbenzene	30	M	30	L	0.64
		sec-Butylbenzene	30	M	30	L	0.66
		tert-Butylbenzene	30	M	30	L	0.68
		Carbon tetrachloride	30	M	30	L	0.72
		Chlorobenzene	30	M	30	L	0.32
		Chloroethane	30	M	30	L	0.19
		Chloroform	30	M	30	L	0.43
		Cloromethane	30	M	30	L	0.28
		2-Chlorotoluene	30	M	30	L	1.9
		4-Chlorotoluene	30	M	30	L	1.8
		1,2-Dibromo-3-chloropropane	30	M	30	L	1.8
		Dibromochloromethane	30	M	30	L	0.54
		1,2-Dibromoethane	30	M	30	L	0.44
		Dibromomethane	30	M	30	L	0.50
		1,2-Dichlorobenzene	30	M	30	L	0.22
		1,3-dichlorobenzene	30	M	30	L	0.21
		1,4-Dichlorobenzene	30	M	30	L	0.72
		Dichlorodifluoromethane	30	M	30	L	0.90
		1,1-Dichloroethane	30	M	30	L	0.40
		1,2-Dichloroethane	30	M	30	L	0.23
		1,1-Dichloroethene	30	M	30	L	0.41
		cis-1,2-Dichloroethene	30	M	30	L	0.17
		trans-1,2-Dichloroethene	30	M	30	L	0.12
		1,2-Dichloropropane	30	M	30	L	0.47
		1,3-Dichloropropane	30	M	30	L	0.42
		2,2-Dichloropropane	30	M	30	L	0.48
		1,1-Dichloropropene	30	M	30	L	0.41
		Ethylbenzene	30	M	30	L	0.61
		Hexachlorobutdiene	30	M	30	L	1.3
		Isopropylbenzene	30	M	30	L	0.28
		p-Isopropyltoluene	30	M	30	L	0.65
		Methylene chloride	30	M	30	L	1.6
		Naphthalene	30	M	30	L	1.5
		n-Propylbnezene	30	M	30	L	0.37
		Styrene	30	M	30	L	0.49
		1,1,1,2-Tetrachloroethane	30	M	30	L	0.44
		1,1,2,2-Tetrachloroethane	30	M	30	L	0.99

QUALITY ASSURANCE OBJECTIVES

Method No.	Matrix	Analyte\Component	Precision %RSD	Conc. Range	Accuracy %R	Conc. Range	MDL[1] µg/L and mg/kg
EPA Method 8260	GW	Tetrachloroethene	30	M	30	L	0.82
	SW	Toluene	30	M	30	L	0.29
	Soil	1,2,3-Trichlorobenzene	30	M	30	L	5.3
	Sed	1,2,4-Trichlorobenzene	30	M	30	L	5.3
		1,1,1-Trichloroethane	30	M	30	L	0.54
		1,1,2-Trichloroethane	30	M	30	L	0.84
		Trichloroethene	30	M	30	L	0.30
		Trichlorofluoromethane	30	M	30	L	0.35
		1,2,3-Trichloropropane	30	M	30	L	1.2
		1,2,4-Trimethylbenzene	30	M	30	L	0.22
		1,3,5-Trimethylbenzene	30	M	30	L	0.52
		Vinyl chloride	30	M	30	L	1.1
		o-Xylene	30	M	30	L	0.47
		o+p Xylene	30	M	30	L	4.5

[1]MDL - MDL is dermined using 40 CFR Part 136 Appendix B

** - QC Targets dervied from literature

▲ - Values derived from literature

QUALITY ASSURANCE OBJECTIVES

Method No.	Matrix	Analyte\Component	Precision %RSD**	Conc. Range	Accuracy %R**	Conc. Range	MDL[1] µg/L and mg/kg
EPA Method 8270	GW SW	Acenaphthene	20	M	35	M	2.2
		Acenaphthylene	20	M	35	M	2.1
		Acetophenone	20	M	35	M	10▲
		2-Acetylaminofluorene	20	M	35	M	20▲
		1-Acetyl-2-thiourea	20	M	35	M	1000▲
		2-Aminoanthraquinone	20	M	35	M	20▲
		Aminoazobenzene	20	M	35	M	10▲
		4-Aminobiphenyl	20	M	35	M	20▲
		Anilazine	20	M	35	M	100▲
		o-Anisidine	20	M	35	M	10▲
		Anthracene	20	M	35	M	2.4▲
		Aramite	20	M	35	M	20▲
		Azinphos-methyl	20	M	35	M	100▲
		Barban	20	M	35	M	200▲
		Benzo(a)anthracene	20	M	35	M	2.3
		Benzo(b)fluoranthene	20	M	35	M	1.4
		Benzo(k)fluoranthene	20	M	35	M	3.8
		Benzoic acid	20	M	35	M	50▲
		Benzo(g,h,i)perylene	20	M	35	M	3.6
		Benzo(a)pyrene	20	M	35	M	2.7
		p-Benzoquinone	20	M	35	M	10▲
		Benzyl alcohol	20	M	35	M	20▲
		bis(2-Chloroethoxy)methane	20	M	35	M	2.3
		bis(2-Chloroethyl)ether	20	M	35	M	2.7
		bis(2-Chloroisopropyl)ether	20	M	35	M	2.7
		4-Bromophenylphenylether	20	M	35	M	6.2
		Bromoxynil	20	M	35	M	10▲
		Butylbenzylphthalate	20	M	35	M	10▲
		Captafol	20	M	35	M	20▲
		Captan	20	M	35	M	50▲
		Carbaryl	20	M	35	M	10▲
		Carbofuran	20	M	35	M	10▲
		Carbophenothion	20	M	35	M	10▲
		Chlorfenvinphos	20	M	35	M	20▲
		4-Chloroaniline	20	M	35	M	20▲
		Chlorobenzilate	20	M	35	M	10▲
		5-Chloro-2-methylaniline	20	M	35	M	10▲
		4-Chloro-3-methylphenol	20	M	35	M	3.3
		3-(Chloromethyl)pyridine-hydrochloride	20	M	35	M	100▲
		2-Chloronaphthalene	20	M	35	M	2.2
		2-Chlorophenol	20	M	35	M	3.5

QUALITY ASSURANCE OBJECTIVES

Method No.	Matrix	Analyte\Component	Precision %RSD**	Conc. Range	Accuracy %R**	Conc. Range	MDL[1] µg/L and mg/kg
EPA Method 8270	GW SW	4-Chlorophenylphenylether	20	M	35	M	2.8
		Chrysene	20	M	35	M	10▲
		Coumpohos	20	M	35	M	40▲
		p-Cresidine	20	M	35	M	10▲
		Crotoxphos	20	M	35	M	20▲
		2-Cyclohexyl-4,6-dinitrophenol	20	M	35	M	100▲
		Demeton-o	20	M	35	M	10▲
		Demeton-s	20	M	35	M	10▲
		Diallate (cis)	20	M	35	M	10▲
		Diallate (trans)	20	M	35	M	10▲
		2,4-Diaminotoluene	20	M	35	M	20▲
		Dibenz(a,j)acridine	20	M	35	M	10▲
		Dibenz(a,h)anthracene	20	M	35	M	3.0
		Dibenzofuran	20	M	35	M	10▲
		Dibenzo(a,e)pyrene	20	M	35	M	3.6
		Di-n-butylphthalate	20	M	35	M	10▲
		Dichlone	20	M	35	M	1000▲
		1,2-Dichlorobenzene	20	M	35	M	1.7
		1,3-Dichlorobenzene	20	M	35	M	1.7
		1,4-Dichlorobenzene	20	M	35	M	2.0
		3,3'-Dichlorobenzidine	20	M	35	M	2.8
		2,4-Dichlorophenol	20	M	35	M	3.4
		2,6-Dichlorophenol	20	M	35	M	10▲
		Dichlorovos	20	M	35	M	10▲
		Dicrotophos	20	M	35	M	10▲
		Diethylphthalate	20	M	35	M	3.0
		Diethylstilbesterol	20	M	35	M	20▲
		Diethyl sulfate	20	M	35	M	100▲
		Dimethoate	20	M	35	M	20▲
		3,3'-Dimethoxybenzidine	20	M	35	M	100▲
		Dimethylaminoazobenzene	20	M	35	M	10▲
		7,12-Dimethylbenz(a)anthracene	20	M	35	M	10▲
		3,3'-Dimethylbenzidine	20	M	35	M	10▲
		a,a-Dimethylphenethylalmine	20	M	35	M	100▲
		2,4-Dimethylphenol	20	M	35	M	10▲
		Dimethyl phthalate	20	M	35	M	10▲
		1,2-Dinitrobenzene	20	M	35	M	40▲
		1,3-Dinitrobenzene	20	M	35	M	20▲
		1,4-Dinitrobenzene	20	M	35	M	40▲
		4,6-Dinitro-2-methlyphenol	20	M	35	M	50▲
		2,4-Dinitrophenol	20	M	35	M	50▲
		2,4-Dinitrotoluene	20	M	35	M	2.4

QUALITY ASSURANCE OBJECTIVES

Method No.	Matrix	Analyte\Component	Precision %RSD**	Conc. Range	Accuracy %R**	Conc. Range	MDL[1] µg/L and mg/kg
EPA Method 8270	GW	2,6-Dinitrotoluene	20	M	35	M	2.7
	SW	Dinocap	20	M	35	M	100▲
		Dinoseb	20	M	35	M	20▲
		5,5-Diphenylhydantoin	20	M	35	M	20▲
		Di-n-octylphthalate	20	M	35	M	4.7
		Disulfoton	20	M	35	M	10▲
		EPA	20	M	35	M	10▲
		Ethion	20	M	35	M	10▲
		Ethyl carbamate	20	M	35	M	50▲
		bis(2-Ethylhexyl)phthatlate	20	M	35	M	10▲
		Ethyl methanesulfonate	20	M	35	M	20▲
		Famphur	20	M	35	M	20▲
		Fensulfothion	20	M	35	M	40▲
		Fenthion	20	M	35	M	10▲
		Fluchloralin	20	M	35	M	20▲
		Fluoranthene	20	M	35	M	2.4
		Fluorene	20	M	35	M	2.2
		Hexachlorobenzene	20	M	35	M	5.2
		Hexachlorobutadiene	20	M	35	M	2.1
		Hexachlorocyclopentadiene	20	M	35	M	10▲
		Hexachloroethane	20	M	35	M	1.6
		Hexachlorophene	20	M	35	M	50▲
		Hexachloropropene	20	M	35	M	10▲
		Hexamethyl phosphoramide	20	M	35	M	20▲
		Hydroquinone	20	M	35	M	100▲
		Indendo(1,2,3-cd)pyrene	20	M	35	M	2.5
		Isodrin	20	M	35	M	20▲
		Isophorone	20	M	35	M	2.7
		Isosafrole	20	M	35	M	10▲
		Kepone	20	M	35	M	20▲
		Leptophos	20	M	35	M	10▲
		Malathion	20	M	35	M	50▲
		Maleic anhydride	20	M	35	M	1000▲
		Mestranol	20	M	35	M	20▲
		Methapyrilene	20	M	35	M	100▲
		Methoxychlor	20	M	35	M	10▲
		3-Methycholanthrene	20	M	35	M	10▲
		4,4'-Methylenebis(2-chloroaniline)	20	M	35	M	1000▲
		Methylmethanesulfonate	20	M	35	M	10▲
		2-Methylnaphthalene	20	M	35	M	10▲
		Methyl parathion	20	M	35	M	10▲
		2-Methylphenol	20	M	35	M	10▲
		3-Methylphenol	20	M	35	M	10▲

QUALITY ASSURANCE OBJECTIVES

Method No.	Matrix	Analyte\Component	Precision %RSD**	Conc. Range	Accuracy %R**	Conc. Range	MDL[1] µg/L and mg/kg
EPA Method 8270	GW	4-Methylphenol	20	M	35	M	10▲
	SW	Mevinphos	20	M	35	M	10▲
		Mexacarbate	20	M	35	M	20▲
		Mirex	20	M	35	M	10▲
		Monocrothphos	20	M	35	M	40▲
		Naled	20	M	35	M	20▲
		Naphthalene	20	M	35	M	2.1
		1,4-Naphthoquinone	20	M	35	M	10▲
		1-Naphthylamine	20	M	35	M	10▲
		2-Naphthylamine	20	M	35	M	10▲
		Nicotine	20	M	35	M	20▲
		5-Nitroacenaphthene	20	M	35	M	10▲
		2-Nitroaniline	20	M	35	M	50▲
		3-Nitroaniline	20	M	35	M	50▲
		4-Nitroaniline	20	M	35	M	20▲
		5-Nitro-o-anisidine	20	M	35	M	10▲
		Nitrobenzene	20	M	35	M	2.1
		4-Nitrobiphenyl	20	M	35	M	10▲
		Nitrofen	20	M	35	M	20▲
		2-Nitrophenol	20	M	35	M	2.9
		4-Nitrophenol	20	M	35	M	1.6
		5-Nitro-o-toluidine	20	M	35	M	10▲
		4-Nitroquinoline-1-oxide	20	M	35	M	40▲
		N-Nitrodibutylamine	20	M	35	M	10▲
		N-Nitrosodiethylamine	20	M	35	M	20▲
		N-Nitrosodiphenylamine	20	M	35	M	10▲
		N-Nitroso-di-n-propylamine	20	M	35	M	2.1
		N-Nitrosopiperidine	20	M	35	M	20▲
		N-Nitrosopyrridine	20	M	35	M	40▲
		Octamethyl pyrophosphoramide	20	M	35	M	200▲
		4,4'-Oxydianiline	20	M	35	M	20▲
		Parathion	20	M	35	M	10▲
		Pentachlorobenzene	20	M	35	M	10▲
		Pentachloronitrobenzene	20	M	35	M	20▲
		Pentachlorophenol	20	M	35	M	5.4
		Phenacetin	20	M	35	M	20▲
		Phenanthrene	20	M	35	M	2.4
		Phenobarbital	20	M	35	M	10▲
		Phenol	20	M	35	M	3.4
		1.4-Phenylenediamine	20	M	35	M	10▲
		Phorate	20	M	35	M	10▲
		Phosalone	20	M	35	M	100▲
		Phosmet	20	M	35	M	40▲

QUALITY ASSURANCE OBJECTIVES

Method No.	Matrix	Analyte\Component	Precision %RSD**	Conc. Range	Accuracy %R**	Conc. Range	MDL[1] µg/L and mg/kg
EPA Method 8270	GW	Phosphamidon	20	M	35	M	100▲
	SW	Phthalic anhydride	20	M	35	M	100▲
		2-Picoline	20	M	35	M	2000▲
		Piperonyl sufoxide	20	M	35	M	100▲
		Pronamide	20	M	35	M	10▲
		Propylthiouracil	20	M	35	M	100▲
		Pyrene	20	M	35	M	2.5
		Pyridine	20	M	35	M	200▲
		Resorcinol	20	M	35	M	100▲
		Safrole	20	M	35	M	10▲
		Strychnine	20	M	35	M	40▲
		Sulfallate	20	M	35	M	1030
		Terbufos	20	M	35	M	20▲
		1,2,4,5-Tetrachlorobenzene	20	M	35	M	10▲
		2,3,4,6-Tetrachlorophenol	20	M	35	M	10▲
		Tetrachlorovinphos	20	M	35	M	20▲
		Tetraethyl pyrophosphate	20	M	35	M	40▲
		Thionazine	20	M	35	M	20▲
		Thiophenol (Benzenethiol)	20	M	35	M	20▲
		Toluene diisocyanate	20	M	35	M	100▲
		o-Toluidine	20	M	35	M	10▲
		1,2,4-Trichlorobenzene	20	M	35	M	2.1
		1,4,5-Trichlorophenol	20	M	35	M	10▲
		2,4,6-Trichlorophenol	20	M	35	M	3.4
		Trifluralin	20	M	35	M	10▲
		2,4,5-Trimethylaniline	20	M	35	M	10▲
		Trimethylphosphate	20	M	35	M	10▲
		1,3,5-Trinitrobenzene	20	M	35	M	10▲
		Tris(2,3-dibromopropyl)phosphate	20	M	35	M	200▲
		Tri-p-tolyl phosphate	20	M	35	M	10▲
		o,o,o-Triethylphosphorothioate	20	M	35	M	1000▲

[1]MDL - MDL is dermined using 40 CFR Part 136 Appendix B

** - QC Targets dervied from literature

▲ - Values derived from literature

QUALITY ASSURANCE OBJECTIVES

Method No.	Matrix	Analyte\Component	Precision %RSD**	Conc. Range	Accuracy %R**	Conc. Range	MDL[1] mg/kg*
EPA Method 8270	S	Acenaphthene	20	M	35	M	660
	Sed	Acenaphthylene	20	M	35	M	660
	HW	Acetophenone	20	M	35	M	660
		2-Acetylaminofluorene	20	M	35	M	1300
		1-Acetyl-2-thiourea	20	M	35	M	66000
		2-Aminoanthraquinone	20	M	35	M	1300
		Aminoazobenzene	20	M	35	M	660
		4-Aminobiphenyl	20	M	35	M	1300
		Anilazine	20	M	35	M	6600
		o-Anisidine	20	M	35	M	660
		Anthracene	20	M	35	M	660
		Aramite	20	M	35	M	1300
		Azinphos-methyl	20	M	35	M	6600
		Barban	20	M	35	M	13000
		Benzo(a)anthracene	20	M	35	M	660
		Benzo(b)fluoranthene	20	M	35	M	660
		Benzo(k)fluoranthene	20	M	35	M	660
		Benzoic acid	20	M	35	M	3300
		Benzo(g,h,i)perylene	20	M	35	M	660
		Benzo(a)pyrene	20	M	35	M	660
		p-Benzoquinone	20	M	35	M	660
		Benzyl alcohol	20	M	35	M	1300
		bis(2-Chloroethoxy)methane	20	M	35	M	660
		bis(2-Chloroethyl)ether	20	M	35	M	660
		bis(2-Chloroisopropyl)ether	20	M	35	M	660
		4-Bromophenylphenylether	20	M	35	M	660
		Bromoxynil	20	M	35	M	660
		Butylbenzylphthalate	20	M	35	M	660
		Captafol	20	M	35	M	1300
		Captan	20	M	35	M	3300
		Carbaryl	20	M	35	M	660
		Carbofuran	20	M	35	M	660
		Carbophenothion	20	M	35	M	660
		Chlorfenvinphos	20	M	35	M	1330
		4-Chloroaniline	20	M	35	M	1300
		Chlorobenzilate	20	M	35	M	660
		5-Chloro-2-methylaniline	20	M	35	M	660
		4-Chloro-3-methylphenol	20	M	35	M	1300
		3-(Chloromethyl)pyridine-hydrochloride	20	M	35	M	6600
		2-Chloronaphthalene	20	M	35	M	660
		2-Chlorophenol	20	M	35	M	660
		4-Chlorophenylphenylether	20	M	35	M	660

QUALITY ASSURANCE OBJECTIVES

Method No.	Matrix	Analyte\Component	Precision %RSD**	Conc. Range	Accuracy %R**	Conc. Range	MDL[1] mg/kg*
EPA Method 8270	S	Chrysene	20	M	35	M	660
	Sed	Coumpohos	20	M	35	M	2600
	HW	p-Cresidine	20	M	35	M	660
		Crotoxphos	20	M	35	M	1300
		2-Cyclohexyl-4,6-	20	M	35	M	6600
		dinitrophenol	20	M	35	M	
		Demeton-o	20	M	35	M	660
		Demeton-s	20	M	35	M	660
		Diallate (cis)	20	M	35	M	660
		Diallate (trans)	20	M	35	M	660
		2,4-Diaminotoluene	20	M	35	M	1300
		Dibenz(a,j)acridine	20	M	35	M	660
		Dibenz(a,h)anthracene	20	M	35	M	660
		Dibenzofuran	20	M	35	M	660
		Dibenzo(a,e)pyrene	20	M	35	M	660
		Di-n-butylphthalate	20	M	35	M	6600
		Dichlone	20	M	35	M	660
		1,2-Dichlorobenzene	20	M	35	M	660
		1,3-Dichlorobenzene	20	M	35	M	660
		1,4-Dichlorobenzene	20	M	35	M	1300
		3,3'-Dichlorobenzidine	20	M	35	M	660
		2,4-Dichlorophenol	20	M	35	M	660
		2,6-Dichlorophenol	20	M	35	M	660
		Dichlorovos	20	M	35	M	660
		Dicrotophos	20	M	35	M	660
		Diethylphthalate	20	M	35	M	660
		Diethylstilbesterol	20	M	35	M	1300
		Diethyl sulfate	20	M	35	M	6600
		Dimethoate	20	M	35	M	1300
		3,3'-Dimethoxybenzidine	20	M	35	M	6600
		Dimethylaminoazobenzene	20	M	35	M	660
		7,12-Dimethylbenz(a)anthracene	20	M	35	M	660
		3,3'-Dimethylbenzidine	20	M	35	M	660
		a,a-Dimethylphenethylalmine	20	M	35	M	6600
		2,3-Dimethylphenol	20	M	35	M	660
		Dimethyl phthalate	20	M	35	M	660
		1,2-Dinitrobenzene	20	M	35	M	2600
		1,3-Dinitrobenzene	20	M	35	M	1300
		1,4-Dinitrobenzene	20	M	35	M	2600
		4,6-Dinitro-2-methlyphenol	20	M	35	M	3300
		2,4-Dinitrophenol	20	M	35	M	3300
		2,4-Dinitrotoluene	20	M	35	M	660
		2,6-Dinitrotoluene	20	M	35	M	660

QUALITY ASSURANCE OBJECTIVES

Method No.	Matrix	Analyte\Component	Precision %RSD**	Conc. Range	Accuracy %R**	Conc. Range	MDL[1] mg/kg*
EPA Method 8270	S	Dinocap	20	M	35	M	6600
	Sed	Dinoseb	20	M	35	M	1300
	HW	5,5-Diphenylhydantoin	20	M	35	M	1300
		Di-n-octylphthalate	20	M	35	M	660
		Disulfoton	20	M	35	M	660
		EPN	20	M	35	M	660
		Ethion	20	M	35	M	660
		Ethyl carbamate	20	M	35	M	2600
		bis(2-Ethylhexyl)phthatlate	20	M	35	M	660
		Ethyl methanesulfonate	20	M	35	M	1300
		Famphur	20	M	35	M	1300
		Fensulfothion	20	M	35	M	2600
		Fenthion	20	M	35	M	660
		Fluchloralin	20	M	35	M	1300
		Fluoranthene	20	M	35	M	660
		Fluorene	20	M	35	M	660
		Hexachlorobenzene	20	M	35	M	660
		Hexachlorobutadiene	20	M	35	M	660
		Hexachlorocyclopentadiene	20	M	35	M	660
		Hexachloroethane	20	M	35	M	660
		Hexachlorophene	20	M	35	M	3300
		Hexachloropropene	20	M	35	M	660
		Hexamethyl phosphoramide	20	M	35	M	1300
		Hydroquinone	20	M	35	M	6600
		Indendo(1,2,3-cd)pyrene	20	M	35	M	660
		Isodrin	20	M	35	M	1300
		Isophorone	20	M	35	M	660
		Isosafrole	20	M	35	M	660
		Kepone	20	M	35	M	1300
		Leptophos	20	M	35	M	660
		Malathion	20	M	35	M	3300
		Maleic anhydride	20	M	35	M	66000
		Mestranol	20	M	35	M	1300
		Methapyrilene	20	M	35	M	6600
		Methoxychlor	20	M	35	M	660
		3-Methycholanthrene	20	M	35	M	660
		4,4'-Methylenebis(2-chloroaniline)	20	M	35	M	66000
		Methylmethanesulfonate	20	M	35	M	660
		2-Methylnaphthalene	20	M	35	M	660
		Methyl parathion	20	M	35	M	660
		2-Methylphenol	20	M	35	M	660
		3-Methylphenol4-Methylphenol	20	M	35	M	660
		Mevinphos	20	M	35	M	660

QUALITY ASSURANCE OBJECTIVES

Method No.	Matrix	Analyte\Component	Precision %RSD**	Conc. Range	Accuracy %R**	Conc. Range	MDL[1] mg/kg*
EPA Method 8270	S	Mexacarbate	20	M	35	M	660
	Sed	Mirex	20	M	35	M	1300
	HW	Monocrothphos	20	M	35	M	660
		Naled	20	M	35	M	2600
		Naphthalene	20	M	35	M	1300
		1,4-Naphthoquinone	20	M	35	M	660
		1-Naphthylamine	20	M	35	M	660
		2-Naphthylamine	20	M	35	M	660
		Nicotine	20	M	35	M	660
		5-Nitroacenaphthene	20	M	35	M	1300
		2-Nitroaniline	20	M	35	M	660
		3-Nitroaniline	20	M	35	M	3300
		4-Nitroaniline	20	M	35	M	3300
		5-Nitro-o-anisidine	20	M	35	M	1300
		Nitrobenzene	20	M	35	M	660
		4-Nitrobiphenyl	20	M	35	M	660
		Nitrobenzene	20	M	35	M	660
		Nitrofen	20	M	35	M	1300
		2-Nitrophenol	20	M	35	M	660
		4-Nitrophenol	20	M	35	M	3300
		5-Nitro-o-toluidine	20	M	35	M	660
		4-Nitroquinoline-1-oxide	20	M	35	M	2600
		N-Nitrodibutylamine	20	M	35	M	660
		N-Nitrosodiethylamine	20	M	35	M	1300
		N-Nitrosodiphenylamine	20	M	35	M	660
		N-Nitroso-di-n-propylamine	20	M	35	M	660
		N-Nitrosopiperidine	20	M	35	M	1300
		N-Nitrosopyrridine	20	M	35	M	2600
		Octamethyl pyrophosphoramide	20	M	35	M	13000
		4,4'-Oxydianiline	20	M	35	M	1300
		Parathion	20	M	35	M	660
		Pentachlorobenzene	20	M	35	M	660
		Pentachloronitrobenzene	20	M	35	M	1300
		Pentachlorophenol	20	M	35	M	3300
		Phenacetin	20	M	35	M	1300
		Phenanthrene	20	M	35	M	660
		Phenobarbital	20	M	35	M	660
		Phenol	20	M	35	M	660
		1.4-Phenylenediamine	20	M	35	M	660
		Phorate	20	M	35	M	660
		Phosalone	20	M	35	M	6600
		Phosmet	20	M	35	M	2600
		Phosphamidon	20	M	35	M	6600

QUALITY ASSURANCE OBJECTIVES

Method No.	Matrix	Analyte\Component	Precision %RSD**	Conc. Range	Accuracy %R**	Conc. Range	MDL[1] mg/kg▲
EPA Method 8270	S	Phthalic anhydride	20	M	35	M	6600
	Sed	2-Picoline	20	M	35	M	130000
	HW	Piperonyl sufoxide	20	M	35	M	6600
		Pronamide	20	M	35	M	660
		Propylthiouracil	20	M	35	M	6600
		Pyrene	20	M	35	M	660
		Pyridine	20	M	35	M	13000
		Resorcinol	20	M	35	M	6600
		Safrole	20	M	35	M	660
		Strychinine	20	M	35	M	2600
		Sulfallate	20	M	35	M	6600
		Terbufos	20	M	35	M	1300
		1,2,4,5-Tetrachlorobenzene	20	M	35	M	660
		2,3,4,6-Tetrachlorophenol	20	M	35	M	660
		Tetrachlorovinphos	20	M	35	M	1300
		Tetraethyl pyrophosphate	20	M	35	M	2600
		Thionazine	20	M	35	M	1300
		Thiophenol (Benzenethiol)	20	M	35	M	1300
		Toluene diisocyanate	20	M	35	M	6600
		o-Toluidine	20	M	35	M	660
		1,2,4-Trichlorobenzene	20	M	35	M	660
		1,4,5-Trichlorophenol	20	M	35	M	660
		2,4,6-Trichlorophenol	20	M	35	M	660
		Trifluralin	20	M	35	M	660
		2,4,5-Trimethylaniline	20	M	35	M	660
		Trimethylphosphate	20	M	35	M	660
		1,3,5-Trinitrobenzene	20	M	35	M	660
		Tris(2,3-dibromopropyl)phosphate	20	M	35	M	13000
		Tri-p-tolyl phosphate	20	M	35	M	660

[1]MDL - MDL is dermined using 40 CFR Part 136 Appendix B

** - QC targets dervied from literature

▲ - Values derived from literature

QUALITY ASSURANCE OBJECTIVES

Method No.	Matrix	Analyte\Component	Precision %RSD	Conc. Range	Accuracy %R	Conc. Range	MDL mg/kg
PCBs▲	HW	1016	30	M	30	M	600
		1221	30	M	30	M	600
		1232	30	M	30	M	600
		1242	30	M	30	M	600
		1248	30	M	30	M	600
		1254	30	M	30	M	1200
		1260	30	M	30	M	1200

▲ - "The Determination of Polychlorinated Biphenyls in Transformer Fluid and Waste Oils", USEPA, 1982.

Detection limits based on lowest standard and final volume

QC Targets dervied from literature

TABLE of

SAMPLE PREPARATION METHODS

Sample Prep Method Numbers	Description	Matrix	Sample Prep Appropriate for these Methods:
3005A	Acid Digestion	Water	6010
3010A	Acid Digestion	Water	6010
3020	Acid Digestion	Water	7060A, 7041A, 7740A, 7841A
3050A	Acid Digestion	Sediment Soil	6010, 7060A, 7041A, 7740A, 7841A
3510	Liquid-Liquid Extraction Separatory Funnel	Water	8015, 8150, 8060, 8080, 8270, 8310, 9070
3520	Liquid-Liquid Extraction Continuous	Water	8060, 8080, 8270, 8310
3540A	Soxhlet Extraction	Sediment Soil	8060, 8080, 8270, 8310, 9071
3550A	Ultrasonic Extraction	Sediment Soil	8080, 8270, 8310
3580	Waste Dilution	Chemical Wastes	8060, 8080, 8270, 8310, PCB in Oil
5030A	Purge and Trap	Water	8010, 8011, 8020, 8021, 8240, 8260

TABLE of

SAMPLE PREPARATION/CLEAN UP METHODS

Sample Prep Method Numbers	Description	Matrix	Sample Prep Appropriate for these Methods:
3610a	Alumina Column Clean Up	GW, SW S, Sed, HW	8270
3611A	Alumina Column Clean Up and Separation on Petroleum Wastes	GW, SW S, Sed, HW	
3620	Florisil Column Clean Up	GW, SW S, Sed, HW	8080, 8150
3630A	Silica Gel Clean Up	GW, SW S, Sed, HW	8310
3640A	Gel-Permeation Clean Up	GW, SW S, Sed, HW	8080, 8270
3650	Acid-Base Partition Clean Up	GW, SW S, Sed, HW	8080, 8270
3660A	Sulfur Clean Up	GW, SW S, Sed, HW	8080
3665	Sulfuric Acid/Permanganate Clean Up	GW, SW S, Sed, HW	8080

6.0 SAMPLING PROCEDURES

At this time AEN-MD is not involved with Field Sampling activities. This section is being reserved for this purpose.

7.0 SAMPLE CUSTODY

7.1 Columbia, Maryland Facility

From the moment a sample is taken and until the date the sample is either disposed of or returned to the client, custody of the sample must be controlled. Custody is routinely maintained on all samples received at AEN-MD. A sample is in custody if one of the following conditions exists:

- It is in the actual possession of the analyst.
- It is in view of the laboratory analyst.
- It was placed in a secure location, after being in one's possession.
- The sample is kept in a secured area which is restricted to authorized personnel only.

AEN-MD employees designated as sample custodians have the responsibility for samples received at AEN-MD and they are fully aware of all custody requirements. In addition to receiving samples, the sample management department is responsible for documentation of sample receipt, storage before and after sample analysis, and eventually the proper disposal of samples.

All samples are examined for their physical condition and preservation and against the Sample Chain of Custody (Figure 7-1) for required analyses upon receipt at AEN-MD. A sample custodian verifies the proper pH of samples and fills out a pH verification form (Figure 7-2). In addition a Sample Receipt Checklist is filled out (Figure 7-3). The sample custodian will also verify that the correct analyses are requested per the Project Form.

Any discrepancies that are noted during the log in procedure are immediately communicated to the designated project manager using the Corrective Action/Project Discrepancy Form (discussed in Section 13.0). The Project Manager is responsible for notifying the client of any problems with their samples.

As each project is received at AEN-MD it is assigned a unique AEN-MD tracking number according to the following procedure. The first four digits in the AEN-MD tracking # are determined chronologically by the year and month in which the sample was received. The next three digits in the AEN-MD tracking number are assigned sequentially to each project that is received in that month beginning with the number 001. The individual samples within a project are numbered sequentially beginning with the number -001. The numbering of each sample within a project is separated from the project number by a hyphen. The AEN-MD internal tracking number, YYMM00A-001 is recorded on the COC, and labels generated from LIMS are placed on the samples. In the case of priority analysis rush notices are distributed to the appropriate lab personnel immediately after assigning a unique AEN-MD number to the sample.

Example YYMM00A-001, where YY = year, MM = month.

The project number, AEN-MD number, client ID, date received, date due, date sampled, client name, project name, rush remarks and flag, required analysis, sample matrix, location of sample in the walk-in cooler, and level of QC report required are entered into the LIMS computer database.

A refrigerator log (Figure 7-4), labels for the samples, and a report listing the sample information and analysis required (Figure 7-5) are generated and printed from the LIMS system.

Sample management creates a file for each project which contains sample receipt documentation, the COC, the completed sample receipt checklist, computer generated analysis reports, and all other project related paperwork. Copies of the project folder are distributed to the appropriate lab

personnel. The project folder is then given to the appropriate PM who maintains and monitors the projects progress until completion.

7.2 On-Site and Mobile Laboratories

The same philosophy regarding sample custody is applied to samples taken for/at the OSL/ML facilities.

The OSL/ML chemist collects samples on a daily basis and completes the chain of custody. (This is the same forms used in the Columbia, Maryland laboratory, Figure 4-1.) The chain of custody is maintained in permanent files at the OSL/ML lab. Remarks regarding the physical characteristics are noted on the chain of custody to track changes in the influent and effluent samples.

Samples are not kept for any length of time at the mobile laboratory, rather, they are disposed of at the end of the day according the sample disposal procedures specific to the site.

In the event the project has unique sample custody requirements, these requirements will supersede this document and will be specified in the QAPP.

AMERICAN ENVIRO[illegible]ENTAL NETWORK, INC.

9151 Rumsey Road, Columbia, MD 21045 Phone (410) 730-8525 Fax (410) 997-2586

Figure 7-1

CHAIN OF CUSTODY RECORD

GREY SHADED AREAS FOR AEN LAB USE

Page_____ of _____

AEN # _____ Quote # _____ Scope Q / M

Client Name: _____

Project Name: _____

Site Location: City, State _____

					# of Container										
					Container Type										
					Preservative Used										
					Type of Analysis										
LAB #	SAMPLE - ID	DATE	TIME	MATRIX											REMARKS

Relinquished by: (Signature) ①	Date / Time	Received by: (Signature)	Received by Laboratory: (Signature)	Date / Time	Shipped via: Shipping Ticket No.
Relinquished by: (Signature) ②	Date / Time	Received by: (Signature)	Remarks:		
Relinquished by: (Signature) ③	Date / Time	Received by: (Signature)	Sampling By:	Sampler's Signature	

SEE REVERSE SIDE FOR TERMS AND CONDITIONS

Figure 7-1

Figure 7-2

pH VERIFICATION FORM

PARAMETERS →

SAMPLE#										

American Environmental Network
Sample Receipt Checklist

Figure 7-3

Client:_____ Project Name:_____ AENI #_____

did samples arrive at AENI:_____ Retain Documentation

(If applicable) Airbill #:_____ Date opened (by initial):_____

No. of coolers:_____ Date Rec'd:_____

		Yes	N/A	No
1.	Where appropriate, is an intact custody seal present on transporting container?			
2.	When applicable indicate location of custody seals on transporting container.			
3.	Is chain-of-custody (coc) present upon receipt of samples?			
4.	Is the following COC information complete: a) project name?			
	b) has client name been recorded on chain-of-custody?			
	c) sample collectors name and date collected?			
	d) whether or not sample set preserved - type of preservative used.			
	e) each sample I.D., date and time of sampling, matrix, requested analysis, number/of sample containers?			
5.	Is each sample and label intact, no breakage or leakage; labels are legible?			
	Where required is there an intact custody seal on each sample?			
7.	Does each sample label match the sample information on chain-of-custody?			
8.	Does matrix of samples received agree with label and chain-of-custody?			
9.	If more than one analysis is to be performed on a sample container, are the analyses compatible?			
10.	Was sufficient ice used?			
11.	Is each sample in an appropriate container with proper preservative, where required?			
12.	Is each sample received within proper holding time?			
13.	Is sufficient sample aliquot provided?			
14.	Were air bubbles absent in Volatile samples? If yes list by # _____ (sample I.D. #).			
15.	Were samples screened for radioactivity?			
16.	Does analysis, TAT, and report level as requested on COC agree with project form information?			
17.	Did you sign custody papers in appropriate place?			

Comments: _____

_____

_____

Project Manager contacted (if necessary) P.R. K.Y. V.K. PDR Generated: Yes No

Inspected by:_____ Date:_____

Figure 7-4(p1)

American Environmental Network, Inc.

Refrigerator Log (NON-VOA)

Login #: L9404123 Project #: Project Name:

SAMPLE #	CLIENT #	OUT	INITIALS	IN	INITIALS	OUT	INITIALS	IN	INITIALS	LOCATION	COMMENT
L9404123-001	METALS CONC 1	5/13	MC							QA Office	
L9404123-002	METALS CONC 2	5/13	MC							QA Office	
L9404123-003	NITRATE,NITRITE/FLUO	5/19	CD							Qa Office	
L9404123-004	CORROSIVITY&SODIUM									QA Office	2 bottles MUST be composite prior to analysis
L9404123-005	SULFATE									Qa Office	
L9404123-006	TOTAL CYANIDE	5/9	CD							Qa Office	
L9404123-007	PESTICIDES 1	5/13	AR							QA OFFICE	
L9404123-008	PESTICIDES 2									QA OFFICE	
L9404123-009	PESTICIDES 3									QA OFFICE	
L9404123-010	PESTICIDES 4									QA OFFICE	
L9404123-011	PESTICIDES 5	5/19	WW							QA OFFICE	
L9404123-012	HERBICIDES CONC 1	5/17	AR							QA Office	
L9404123-013	PCB	5/27	AR							QA OFFICE	

Figure 7-4(p2)

American Environmental Network, Inc.

Refrigerator Log (VOA)

Login #: L9404123 Project #: Project Name:

SAMPLE #	CLIENT #	OUT	INITIALS	IN	INITIALS	OUT	INITIALS	IN	INITIALS	LOCATION	COMMENT
L9404123-014	TRIHALOMETHANES	5/2-/94	WP							QA OFFICE	
L9404123-015	VOC CONC 1									QA OFFICE	
L9404123-016	VOC CONC 2									QA OFFICE	
L9404123-017	VOC CONC 3									QA OFFICE	

Figure 7-5 (p1)

American Environmental Network (MD), Inc
LOGIN CHAIN OF CUSTODY REPORT (ln01)
Apr 26 1994, 12:01 pm

Login Number: L9404123
Account: EVAL Performance Evaluation Studies

Client Project: EVAL - WS034

Laboratory Sample Number	Client Sample Number	Collect Date	Receive Date	PR	Due Date	Rep Lvl
L9404123-001	METALS CONC 1	22-APR-94	22-APR-94		06-MAY-94	3
M=DW, Drinking water methods						
Drink H2O S ALICP2			QA Office		1 Bottles	
Drink H2O S ASFURN2	As		QA Office			
Drink H2O S BEICP2			QA Office			
Drink H2O S CDICP2			QA Office			
Drink H2O S CRICP2			QA Office			
Drink H2O S CUICP2			QA Office			
Drink H2O S HG245.2			QA Office			
Drink H2O S MNICP2			QA Office			
Drink H2O S NIICP2			QA Office			
Drink H2O S PBFURN2	Pb		QA Office			
Drink H2O S SEFURN2	Se		QA Office			
Drink H2O S ZNICP2			QA Office			
L9404123-002	METALS CONC 2	22-APR-94	22-APR-94		06-MAY-94	3
M=DW, Drinking water methods						
Drink H2O S AGICP2	Tl		QA Office			
Drink H2O S BAICP2			QA Office			
Drink H2O S SBFURN2	Sb		QA Office		1 Bottles	
Drink H2O S TLFURN2			QA Office			
L9404123-003	NITRATE,NITRITE/FLUO	22-APR-94	22-APR-94		06-MAY-94	3
M=DW,						
Drink H2O S FLUORIDE340.2			Qa Office			
Drink H2O S NITRATE300.0			Qa Office		1 Bottles	
Drink H2O S NITRITE300.0			Qa Office			
L9404123-004	CORROSIVITY&SODIUM	22-APR-94	22-APR-94		06-MAY-94	3
M=DW, *2 bottles must be mixed befroe analysis to make 1 sample. Mix 1A + 1B according to instructions*						
Drink H2O S ALK310.1			QA Office			
Drink H2O S HARDNESS130.2			QA Office			
Drink H2O S NAICP2			QA Office			
Drink H2O S PH150.1			QA Office			
Drink H2O S TDS160.1			QA Office		2 Bottles	
L9404123-005	SULFATE	22-APR-94	22-APR-94		06-MAY-94	3
M=DW,						
Drink H2O S SULFATE300.0			Qa Office		1 Bottles	
L9404123-006	TOTAL CYANIDE	22-APR-94	22-APR-94		06-MAY-94	3
M=DW,						
Drink H2O S CNTOT335.2			Qa Office		1 Bottles	

Figure 7-5 (P2)
American Environmental Network (MD), Inc
LOGIN CHAIN OF CUSTODY REPORT (ln01)
Apr 26 1994, 12:01 pm

Login Number: L9404123
Account: EVAL Performance Evaluation Studies

Client Project: EVAL - WS034

Laboratory Sample Number	Client Sample Number	Collect Date	Receive Date	PR	Due Date	Rep Lvl
L9404123-007	PESTICIDES 1	22-APR-94	22-APR-94		06-MAY-94	3
M=DW, Report; Endrin, Lindane, Methoxycholr.						
Drink H2O S PEST508			QA OFFICE		1 Bottles	
L9404123-008	PESTICIDES 2	22-APR-94	22-APR-94		06-MAY-94	3
M=DW, Report; Toxaphene.						
Drink H2O S PEST508			QA OFFICE		1 Bottles	
L9404123-009	PESTICIDES 3	22-APR-94	22-APR-94		06-MAY-94	3
M=DW, Report; Chlordane.						
Drink H2O S PEST508			QA OFFICE		1 Bottles	
L9404123-010	PESTICIDES 4	22-APR-94	22-APR-94		06-MAY-94	3
M=DW, Report; by 505 - Hexachlorocyclopentadiene by 505, report others by 508 - Heptachlor, Heptachlor, Epoxide, Hexachlorobenzene.						
Drink H2O S PEST505			QA OFFICE			
Drink H2O S PEST508			QA OFFICE		1 Bottles	
L9404123-011	PESTICIDES 5	22-APR-94	22-APR-94		06-MAY-94	3
M=DW, Report; Alachlor, Atrazine, Simazine.						
Drink H2O S PEST505			QA OFFICE		1 Bottles	
L9404123-012	HERBICIDES CONC 1	22-APR-94	22-APR-94		06-MAY-94	3
M=DW, Report; 2,4-D, Silvex, Pentachlorophenol.						
Drink H2O S HERB515.1			QA Office		1 Bottles	
L9404123-013	PCB	22-APR-94	22-APR-94		06-MAY-94	3
M=DW, Report; Decachlorobiphenyl						
Drink H2O S PCB508A			QA OFFICE		1 Bottles	
L9404123-014	TRIHALOMETHANES	22-APR-94	22-APR-94		06-MAY-94	3
M=DW,						
Drink H2O S VOA524.2			QA OFFICE		1 Bottles	
L9404123-015	VOC CONC 1	22-APR-94	22-APR-94		06-MAY-94	3
M=DW,						
Drink H2O S VOA524.2			QA OFFICE		1 Bottles	
L9404123-016	VOC CONC 2	22-APR-94	22-APR-94		06-MAY-94	3
M=DW,						
Drink H2O S VOA524.2			QA OFFICE		1 Bottles	
L9404123-017	VOC CONC 3	22-APR-94	22-APR-94		06-MAY-94	3
M=DW,						

Figure 7-5 (p3)
American Environmental Network (MD), Inc
LOGIN CHAIN OF CUSTODY REPORT (ln01)
Apr 26 1994, 12:01 pm

Login Number: L9404123
Account: EVAL Performance Evaluation Studies

Client Project: EVAL - WS034

Laboratory Sample Number	Client Sample Number	Collect Date	Receive Date	PR	Due Date	Rep Lvl
Drink H2O	S VOA524.2		QA OFFICE		1 Bottles	

Signature: _____

Date: _____

8.0 ANALYTICAL PROCEDURES

8.1 Analytical Procedures

AEN-MD uses published EPA methodologies, NIOSH methods, and Standard Methods for routine analysis of client samples. In some instances, client supplied methodologies are requested. In all cases, the analytical methods used are clearly stated in the final report.

8.2 Use of Standard Operating Procedures

AEN-MD has standard operating procedures (SOPs) to define the exact routines to be followed in each department for all analytical procedures. A copy of the SOP index is provided as Appendix D to this manual. The entire SOP manual is available for client review at AEN-MD.

Each laboratory and office area has a copy of the SOPs applicable to operations performed in that area. The SOP manual in the QA office area contains a complete set of all SOPs.

All Laboratory employees are responsible for reading, understanding, and following the SOPs. To document this, each employee is required to sign an SOP Review Sheet (Figure 8-1), which attests to the fact that they have read the SOPs applicable to their job function. This documentation is filed in the employee's certification file.

SOPs will be reviewed on an annual basis. SOP review will be spread over the twelve month period to avoid over-burdening the laboratory. All supervisory personnel will be apprised of the schedule and the QA Officer will follow-up on all scheduled due dates. Approved revised procedures will be distributed by the Quality Assurance Manager. (Figures 8-2 and 8-3).

The original draft SOP which has been reviewed by the area supervisor will be distributed by the QA Department to all personnel whose input is required or useful in evaluating the proposed SOP. After all comments are received by the QA Department the Department will circulate the final original document for approval signatures and then issue the document to those manual and/or individuals on the circulation list.

Original signed Standard Operation Procedures are kept by the QA Manager. A historical file is maintained. When an SOP is revised, the old version is marked "OBSOLETE" and dated. Each SOP is marked with an effective date. The QA unit maintains a distribution list for the SOPs. Updates are distributed to the appropriate manual by the QAM. Obsolete SOPs are removed from each manual at that time.

Controlled copies are to be stamped in red ink on all pages. All uncontrolled copies including those sent to clients and regulatory agencies need t be stamped that it is an uncontrolled document and may not reflect current procedures. It should also be stamped as being proprietary information and not for distribution except by AEN-MD. All copies of SOPs should be requested from and supplied by the QA Department.

In addition to the "traditional" SOPs such as those based on Standard Methods and SW846, many clients and OSL/MLs request customized SOPs to meet their specific needs. These SOPs are referenced in the OSL/ML QAPP for site specific SOPs and identified as "client specific" SOPs on the AEN-MD SOPs (90-prefix).

8.3 Reagent Quality Control

Distinction will be made between reagents purchased from vendors and those that involve preparation within the Laboratory. Purchased reagents can be of various grades, including analytical, spectral, and

"nanopure". The SOPs for reagents and analytical procedures should specify the grade of reagents, and the difference between reagents that are specific for a given analytical procedure, and general or shelf reagents. The latter will typically be less precisely prepared. In no case, is deviation permitted from the instructions in the recipes for analytical procedures. These specify the required conditions for preparation including the required precision, glassware, and the accuracy and precision required in weighing. A reagent whose preparation is specific for a given procedure and whose preparation is particularly involved will be reserved for that procedure and will not be used as general shelf reagent.

Both purchased and prepared reagents will be controlled on a batch basis. For purchased reagents such as solvents, this means the purchase of quantities appropriate to the needs of the laboratory and the stability or shelf life of the material. All reagents will be evaluated for the presence of interference or significant background problems by the running of reagent blanks. Similar batch control will be employed with reagents that involve preparation in the Laboratory. In both cases, appropriate blanks will be run with each group of analyses. It is a requirement of the work plan to specify the nature and composition of these blanks. It is also expressly forbidden to switch from one batch to a second during the course of work on a group of analyses. The work plan must anticipate the reagent needs; adequate reagents must be available before work is initiated. If the unacceptable situation does occur in which reagent supplies are exhausted in the midst of a given effort, all control and standards must be taken that would permit intercomparison of data taken with different sets of reagents.

The analytical procedures and reagent recipes recorded in the appropriate SOP will specify the required storage conditions. The concerns involved may include:

a. Need for storage away from light.
b. Refrigeration requirements.
c. Container requirements; e.g., glass versus plastic.
d. Appropriate dating to insure discarding at the expiration of the shelf life of the reagents.

All reagent stock bottles must be handled with proper technique to prevent their contamination or destruction. For example, pipetting from and returning unused reagents to stock bottles are not permitted.

All reagents, solvents and standards shall be dated (mm-dd-yy), and initialled upon receipt at the laboratory and stored under conditions that will maintain their initial high quality. They will be used on a first in - first out basis from storage.

8.4 Labeling

All laboratory-prepared reagents must, at a minimum, be labeled with the following information: reagent name, date prepared, concentration, solvent, discard/expiration dates and the initials of the preparer. If the reagent is toxic, hazardous, or flammable, it is mandatory that an appropriate caution label be placed on the container. Additional information that may be required in specific cases includes: name of analytical procedure (if this reagent is specific for a particular method), procedure designation (such as Method 103-Phosphate-Reagent A) if analytical information, shelf life information and discard date.

8.5 Waste Disposal

All laboratory waste is disposed according to regulatory requirements. AEN-MD maintains copies of all manifests for lab waste/sample disposal. An SOP is available documenting AEN-MD policies/practices regarding waste disposal practices.

9.0 LABORATORY INSTRUMENTATION AND CALIBRATION PROCEDURES

9.1 Laboratory Instrumentation

9.1.1 Table 9-2 lists the equipment routinely used at AEN-MD.

9.2 Standards

9.2.1 Certified standards will be used for all primary calibrations. NIST, NIST- traceable, or EPA standards will be used, when available, for the primary calibrations or verification of primary calibrations. All dilutions of solution standards will be recorded in a readily accessible log book. Identity of dilutions will be such that a secondary standard or dilution can be traced, though subsequent actions, back to the initial certification.

9.2.2 Quality Control Check Standards will be used to record instrument sensitivity and linearity, and to verify proper response. Calibration entries into the instrument logbooks will be dated, initialed and documented by the analyst.

9.2.3 Preparation of all standard solutions are documented in bound notebooks as specified in AEN-MD SOP #10-003.0. Each stock material (either neat or concentrated) is assigned a number which is referenced in the preparation log. Prepared solution numbers are recorded on the analysis run sheet. The standard solution preparation log contains entries regarding the source material which includes:

- Compound name.
- Purity.
- Manufacturer and lot number (for neat or stock).
- Concentration, if in solution form.
- Solvent, when appropriate.

9.2.4 All stock standard solutions, stock matrix spiking solutions, and stock surrogate stock solutions must be verified against a known source prior to use in the laboratory.

9.2.5 Calibration Procedures

9.2.5.1 Calibration protocols are specified in EPA Approved Methods, in American Environmental Network, Inc. Standard Operating Procedures, or according to manufacturers operating instructions.

9.2.5.2 Acceptable initial calibrations are achieved prior to the start of analysis. Each laboratory section is responsible for maintain copies of initial calibrations for their instruments.

9.2.5.3 Table 9-1 lists routine calibration procedures for many of the methods performed at AEN-MD.

9.3 On Site Laboratory

9.3.1 Refer to the QAjPP for a discussion of laboratory instrumentation at the OSL.

9.3.2 Refer to the QAjPP for a discussion of standards and calibration procedures at the OSL.

TABLE 9-1
ROUTINE CALIBRATION PROCEDURES USED AT AEN-MD

Calibration Step	Description	Frequency
Gas Chromatography		
Initial Calibrations	Each analytical method has its own acceptance criteria for the initial curve. AEN-MD uses these criteria to critically assess the usability of the initial curves.	
	EPA 500 and 600 Series consists of a minimum of 3 points.	Multi-point initial calibrations as required by methods or until the time that the continuing EPA calibration criteria are not met.
	SW846 methods consists of a minimum of 5 points.	
	USEPA CLP method consists of 3 points.	
Continuing Calibration	Each analytical method has its own acceptance criteria for the continuing calibration standard. These specifications are followed when analyzing samples at AEN-MD.	Whenever an entire initial calibration is on run and after every 10 samples.
Internal Standards	Each analytical method has its own acceptance criteria for the internal standards. These specifications are followed when analyzing samples at AEN-MD.	In all samples, blanks, and method required QC samples.
Blanks	Instrument blanks are used to verify system cleanliness prior to the analysis of any samples.	At the beginning of each analytical run, and after every 10 samples.

TABLE 9-1
ROUTINE CALIBRATION PROCEDURES USED AT AEN-MD

Calibration Step	Description	Frequency
Gas Chromatography/Mass Spectroscopy		
Tune	Instruments are analyzed with DFTPP for BFB to verify that method abundance criteria has been met prior to analyzing client samples.	
	500 Series	Every 8 hours.
	600 Series	Every 24 hours (once per day).
	SW846 Series	Every 12 hours.
	CLP Methods	Every 12 hours.
Initial Calibrations	Each analytical method has its own acceptance criteria for the initial curve. AEN-MD uses these criteria to critically assess the usability of the initial curves.	
	EPA 500 and 600 Series consists of a minimum of 3 points.	Multi-point initial calibrations as required by methods or until the time that the continuing EPA calibration criteria are not met.
	SW846 methods consists of a minimum of 5 points.	
	USEPA CLP method consists of 3 points.	
Continuing Calibration	Each analytical method has its own acceptance criteria for the continuing calibration standard compounds. These specifications are followed when analyzing samples at AEN-MD.	Single point run after each tune.
Internal Standards	Each analytical method has its own acceptance criteria for the internal standards. These specifications are followed when analyzing samples at AEN-MD.	In all samples, blanks, and method required QC samples.

TABLE 9-1
ROUTINE CALIBRATION PROCEDURES USED AT AEN-MD

Calibration Step	Description	Frequency
(GC/MS cont.)		
Blanks	For volatiles, instrument blanks are used to verify system cleanliness prior to the analysis of any samples.	Run after each tune.
Inductively Coupled Plasma Atomic Emission Spectroscopy		
Initial Calibration	The instrument is initially calibrated on a blank and high point on the curve. Immediately following a mid-level point and point near the detection or reporting limit.	The instrument is calibrated daily.
Continuing Calibrations	A point mid-level on the calibration curve.	Every 10 samples.
Blanks	Deionized water blanks.	Every 10 samples.
Atomic Absorption Spectroscopy		
Initial Calibration	The instrument is calibrated with 5 points over the working range of the instruments.	The instrument is calibrated daily.
Continuing Calibration	A point mid-level on the calibration curve.	
Blanks	Deionized water blanks.	Every 10 samples.

TABLE 9-1
ROUTINE CALIBRATION PROCEDURES USED AT AEN-MD

Calibration Step	Description	Frequency
Miscellaneous General Chemistry Parameter		
Initial Calibrations	Multipoint calibrations for all analyses:	
	Ion selective electrodes (5 points)	With each use.
	UV/VIS (3-5 points)	With each use.
	IR (5-7 points)	Weekly.
	Other (single point as LCS)	With each analysis.
Continuing Calibrations	A point mid-level on the calibration curve.	
	Ion selective electrodes	Every 10 samples.
	UV/VIS	Every 10 samples.
	IR (3 points)	Daily, when initial curve is not run.
	Other (single point as LCS)	Run if more than 10 samples are run.
Blanks	Deionized water blanks.	With each calibration.

TABLE 9-1
ROUTINE CALIBRATION PROCEDURES USED AT AEN-MD

Calibration Step	Description	Frequency
Balances		
	Balances are checked by outside source.	Yearly
	Balances are checked against class S weights.	Daily (or with use if balance not used daily).
Weights	Weights checked by independent calibrations.	Yearly.

TABLE 9-2
AMERICAN ENVIRONMENTAL NETWORK
EQUIPMENT LIST

INSTRUMENT	SERIAL NUMBER	DETECTOR TYPE	FRONT SERIAL #	BACK SERIAL #	DATE PURCHASED
HP GC 5880A (GC A)	2417A06519	ECD	S9903	S11038	1986
HP GC 5890 (GC C)	2631A08763	FID's	N/A	N/A	1986
HP GC 5890 (GC D)	2612A07698	FID, NPD	N/A	N/A	1986
HP GC 5890 (GC E)	2612A07699	ELCD, PID	6506-8-749	10719-1-862	1986
HP GC 5890 SERIES II (GC F)	2643A10988	ECD	L5019	L5532	1987
HP GC 5890 (GC G)	2631A08761	ECD	E3307	L7844	1986
HP GC 5890 (GC H)	2631A08762	ECD	L5286	L4151	1986
HP GC 5890 (GC I)	2728A13771	FID's	N/A	N/A	1987
HP GC 5890 (GC L)	3235A44891	FID, PID	N/A	90-640	1993

TABLE 9-2
AMERICAN ENVIRONMENTAL NETWORK
EQUIPMENT LIST

INSTRUMENT	SERIAL NUMBER	DATE PURCHASED
HP GC/MS 5985	70198	1985
HP GC/MS 5970 MSD	2637A01793	1987
HP GC/MS 5995	2575A03983	1985
HP GC/MS 5970 B	3004A12643	1991
DATA SYSTEM HP 1000	2440A4995	1985
DATA SYSTEM HP	3022A00895	1991
HP 5972 MSD E	3329A-00784	1993
HP 5972 MSD F	3329A-00587	1993
DATA SYSTEM: CHEM SERVER	321A02574	1993
PURGE AND TRAP: TEKMAR MODEL 3000 E	93328003	1993
PURGE AND TRAP: TEKMAR MODEL 3000 F	93336002	
CHEM STATION E	3341A60506	
CHEM STATION F	3341A60507	

TABLE 9-2
AMERICAN ENVIRONMENTAL NETWORK
EQUIPMENT LIST

INSTRUMENT	SERIAL NUMBER	DATE PURCHASED
WATERS 700 SATELLITE WISP		1987
WATERS 712 WISP		1991

TABLE 9-2
AMERICAN ENVIRONMENTAL NETWORK
EQUIPMENT LIST

INSTRUMENT	SERIAL NUMBER	DATE PURCHASED
TJA 61E	281490 (power 2296)	1994
PE P2	128346	1991 (PURCHASED USED)
PE 5000 GFAA	127602	1984
PE 3030 ZEEMAN GFAA	3164	1987
PE 3100 MERCURY ANALYZER	LP23329C	1990

TABLE 9-2
AMERICAN ENVIRONMENTAL NETWORK
EQUIPMENT LIST

INSTRUMENT	SERIAL NUMBER	DATE PURCHASED
METTLER AE163 ANALYTICAL BALANCE (INORGANIC PREP)	F12277	1986
FISHER TOPLOADER XL3000 (INORGANIC PREP)	04506	1986
SARTORIUS A2005 (JOE'S OFFICE)	3706105	1988
FISHER XT660 TOPLOADER (VOA PREP)	22275	1987
METTLER PF3600 TOPLOADER (ORGANIC PREP)	H78985A	BEFORE 1988
METTLER PC400 TOPLOADER (ORGANIC PREP)		BEFORE 1988

TABLE 9-2
AMERICAN ENVIRONMENTAL NETWORK
EQUIPMENT LIST

INSTRUMENT	SERIAL NUMBER	DATE PURCHASED
INFRARED SPECTROPHOTOMETER PE MODEL 1310	133603	1987
UV\VIS SPECTROPHOTOMETER MILTON ROY MODEL 601	3615246002	1994
FLASHPOINT APPARATUS PRECISION SCIENTIFIC	10BB-12	1994
CONDUCTANCE METER YSI MODEL 35	G8002413	1994
TURBIDIMETER HF SCIENTIFIC MODEL DRT100B	28656	1994
GPC UNIT ABC MODEL 1000 SERIES		
WHEATON DISSOLVED OXYGEN METER	8950H	1933
DIONEX ION CHROMATOGRAPH	884102	1988
ORION EXPANDABLE ION ANALYZER EA 940	1752	1990
OVEN VWR 1300	1105193	1993

TABLE 9-2
AMERICAN ENVIRONMENTAL NETWORK
EQUIPMENT LIST

INSTRUMENT	# UNITS
REFRIGERATORS/FREEZER	20
OVENS	3
MUFFLE FURNACE	1
KILN	1
WATER BATHS	3
CENTRIFUGES	2

10.0 PREVENTIVE MAINTENANCE

10.1 Maryland Facility

10.1.1 All equipment whose operation and function directly affects the quality of service have logbooks where all repair and preventive maintenance is documented.

10.1.2 Table 10-1 outlines the steps to be documented in the maintenance logs.

10.2 On-Site and Moblie Laboratories

10.2.1 Refer to the QAPP for preventive maintenance schedules for OSL/ML equipment.

TABLE 10-1
PREVENTIVE MAINTENANCE SCHEDULE

INSTRUMENT	ACTIVITY	FREQUENCY
GC/MS-SVOA	Replace Septa	Daily
	Clean Injection Port	Minimum of twice weekly
	Clean Source	As needed
	Change Pump Oil	As needed
	Clip Column Leader	When cleaning the injection port
	Check Gases	Daily
	Check for leaks	When indicated by scan
	Check Auto Sampler Alignment	Daily
GC/MS-VOA	Replace Septa	Twice weekly
	Clean Injection Port	As needed
	Clean Source	As needed
	Change Pump Oil	As needed
	Clip Column Leader	
	Check Gases	Daily
	Check for leaks	When indicated by scan
	Check Auto Sampler Alignment	Daily
Purge and Trap	Replace Lines	As needed
	Bake Lines	Daily (auto as part of run
	Clean Sample Vessels	Used disposable vessels
	Check Gases	Daily
	Perform Leak Check	When indicated
Gas Chromatography	Replace Septa	1/100 injects
	Clean Injection Port	With septa change
	Clip column Leader	When indicated with degradation check
	Check Reagents	When needed
	Replace Nickel Tube	Every 6 months
	Clean Lamp	Every 6 months
	Clean FID Jet	Every 6 months
	Check Gases	Daily
	Check for Leaks	At column installations
	Check Autosampler Alignment	As needed
Purge and Trap	Replace Lines	Every 6 months
	Bake Lines	Every 3 months
	Clean Sample Vessels	Daily
	Check Gases	Daily
	Perform Leak Check	As needed
Organic Prep		
Steambaths	Check Water Level	
	Monitor Temperature	

14.0 PERFORMANCE AND SYSTEMS AUDITS

Internal Audits

The correct operation and full implementation of the internal Quality Assurance/Quality Control Procedures outlined in this manual and in Project Standard Operating Procedures will be confirmed by audits conducted by the Quality Assurance Unit (Figure 14-1). The QAM will generate a report on the basis of these audits which will be submitted to the General Manager along with a plan for corrective actions where necessary.

The basis for the Quality Assurance audit may include the American Environmental Network, Inc. Quality Assurance/Quality Control Procedures Manual, Standard Operation Procedures Manuals, technical specifications contained in contracts, and good laboratory practices. Technical files, documents facilities and personnel will be available to the auditor upon request and at the discretion of the President. The proper functioning of the QC system will be assured by reviewing:

- Adherence to standard operating procedures detailed in the procedures manuals.
- Organization chart identifying responsible personnel.
- Sign-offs by appropriate personnel on data sheets and sample progress record.
- Document filing storage and retrieval systems.
- Evidence of report review before finalization.
- Quality status reports.
- Documentation of precision, accuracy and completeness.
- Records of deficiencies, analytical events out of control, and corrective actions required and taken.
- Evidence of instrument and analyst certification and technical training.
- Laboratory facilities and equipment.

The audit report submitted to the General Manager will contain findings of deficiencies and will state corrective actions to be taken and/or new procedures to be implemented. A reasonable time limit will be recommended by the QA Department for completion of such actions.

Audits of Subcontractors

Analysis performed by subcontractors should meet or exceed the requirements of AEN-MD's QA/QC program. Potential organizations will be screened and suitable candidates identified by the Marketing Department. AEN-MD reserves the right to audit any subcontractors prior to submitting work.

Under certain contracts, AEN-MD may be a subcontractor. In these instances, the Prime Contractor also has the right to evaluate American Environmental Network Inc.'s subcontractor according the their SOP's.

MONTHL NERAL AUDIT

Figure 14-1

Date _____
Auditor: _____

SECTION 1. LABORATORY APPEARANCE/CLEANLINESS/SAFETY

Y	N		Comments
		A. General chemsitry:	
—	—	Are samples out on the bench? Check to see when samples were checked out of frige.	
—	—	Check the benches. Is the bench paper clean or soiled? Are unlined benched wiped down or is there spilled material all over?	
—	—	Are the hoods clean and orderly? Are hoods being used to store chemical or other materials?	
—	—	Are walkways clear? Is any equipment or carts left in the way?	
—	—	Is there a lot of dirty glassware laying about?	
—	—	Is clean glassware stored properly?	
—	—	Condition of glassware.	
		B. Metals prep	
—	—	Are samples out on the bench? Check to see when samples were checked out of frige.	
—	—	Check the benches. Is the bench paper clean or soiled? Are unlined benched wiped down or is there spilled material all over?	
—	—	Are the hoods clean and orderly? Are hoods being used to store chemical or other materials?	
—	—	Are walkways clear? Is any equipment or carts left in the way?	
—	—	Is there a lot of dirty glassware laying about? Is clean glassware stored properly?	
—	—	Condition of glassware.	

C. Organic Prep

— — Are samples out on the bench? Check to see when samples were checked out of frige.

— — Check the benches. Is the bench paper clean or soiled? Are unlined benched wiped down or is there spilled material all over?

— — Are the hoods clean and orderly? Are hoods being used to store chemical or other materials?

— — Are walkways clear? Is any equipment or carts left in the way?

— — Is there a lot of dirty glassware laying about? Is clean glassware stored properly?

— — Condition of glassware.

D. Metals Lab

— — Are the bench tops cluttered? Are solvents left out in the open, uncapped? Are the bench tops dirty?

— — Are chemicals labelled with date of receipt, opening, and expiration? Are any out of date?

— — Condition of glassware.

E. GC/LC Lab

GC

— — Are the bench tops cluttered? Are solvents left out in the open, uncapped? Are the bench tops dirty?

— — Are chemicals labelled with date of receipt, opening, and expiration? Are any out of date?

— — Condition of glassware.

LC

— — Are the bench tops cluttered? Are solvents left out in the open, uncapped? Are the bench tops dirty?

— — Are chemicals labelled with date of receipt, opening, and expiration? Are any out of date?

— — Condition of glassware.

F. GC/MS

Volatiles

— — Are the bench tops cluttered? Are solvents left out in the open, uncapped? Are the bench tops dirty?

— — Are chemicals labelled with date of receipt, opening, and expiration? Are any out of date?

— — Condition of glassware.

Semivolatiles

— — Are the bench tops cluttered? Are solvents left out in the open, uncapped? Are the bench tops dirty?

— — Are chemicals labelled with date of receipt, opening, and expiration? Are any out of date?

— — Condition of glassware.

G. Sample Management

— — Are samples put away after being logged in? Check to see if samples are sitting on tables.

— — Check the benches. Is the bench paper clean or soiled?

— — Is the hood clean and orderly?

— — Are walkways clear? Are any equipment, coolers or carts left in the way?

— — Are preservatives labelled properly? Are any expired?

— — Is there a stockpile of dirty pipettes in hood?

MONTHI 'NERAL AUDIT

Dat _____
Auditor: _____
Lab Section: _____
Instrument: _____
Page: __ of __

SECTION 2. INSTRUMENT MAINTENANCE LOGS

Y	N	_____
__	__	Is maintenance log present
__	__	Does maintenance log clearly document the instrument that it applies to?
__	__	Is a copy of the preventative maintenance schedule present for analyst use?
__	__	Is the schedule being adhered to?
__	__	Does maintenance log indicate:
__	__	Date and type of routine maintenance performed?
__	__	Name of person or company that performed the maintenance?
__	__	Place for comments that may include whether instrument was down and when instrument was brought back up.
__	__	Periodic review by a supervisor
__	__	Are entries legible and do they follow standard good laboratory documentation practices. (single line crossouts, initials and dates indicating revisions, no whiteout, empty spaces at bottom of pages lined through with a date)

O:\MTHAUDIT\SECTION2.INS

MONTHL' 'ENERAL AUDIT

Date _____
Auditor _____
Lab Section: _____
Instrument: _____
Page: __ of __

SECTION 3. INSTRUMENT RUN LOGS

Y	N	
		_____
__	__	Is run log present for instrument chosen?
__	__	Does run log clearly indicate the instrument that it applies to?
		Does the run log indicate:
__	__	Date the analysis was performed and time if applicable
__	__	Name of analyst that performed the analysis
__	__	Periodic review by a supervisor? Is there documentation that every log has been reviewed? Is there a copy of the logs within each department?
__	__	Instrument conditions at the time of analysis
__	__	Place for comments that may include any sample anomalies or discrepancies, out of control QC or reruns of samples
__	__	Is there a hand-written/or pre-prepared injection log present in the logbook. These logs are not to be prepared <u>after</u> the fun has been finished.
__	__	Are entries legible and do they follow standard good laboratory documentation practices? (Single line crossouts, initials and dates indicating revisions, no whiteout, empty spaces at bottom of pages lined through with a date)

MONTHL' 'NERAL AUDIT

Date _____
Auditor. _____
Lab Section: _____
Instrument: _____
Page: __ of __

SECTION 4. REFRIGERATOR/OVEN/WATER BATH LOGS.

Y	N	
__	__	Is current refrigerator log in place?
__	__	Is there a calibrated thermometer in the refrigerator?
__	__	Is the corrected adjustment factor bing applied?
__	__	Are entries on the log consistent with normal business days for the lab?
__	__	Are any temperatures out of acceptance criteria listed on the log? Is there documentation of corrective action?
__	__	Check the refrigerator logs where samples are stored? Are samples signed out? Is the pH of the VOA samples being recorded?

TABLE 10-1
PREVENTIVE MAINTENANCE SCHEDULE

INSTRUMENT	ACTIVITY	FREQUENCY
Nitrogen Blowdown Unit	Check Water Level	
	Monitor Temperature	
	Check Gas	
	Check Gas Tips	
GPC	Flush system with methylene chloride	With heavy usage
	Repack column	Every 3-4 months
Atomic Absorption		
Furnace	Clean Windows	Daily
	Change Graphite Tube	As Needed
	Check Gases	Daily
	Check Optics	Daily
	Check Autosampler tubing	Daily
	Check Autosampler Alignments	Daily
	Check Rinse/Drain bottles	Daily
	Change Graphite Contacts	As Needed
	Flush Autosampler Tubing	Before each sample injection
	Clean Furnace Head	Daily
ICP	Check Aspiration Tubing	Daily
	Clean Torch Assembly	As Needed
	Clean Spray Chamber	As Needed
	Check Gases	Daily
	Clean/Lube Pump Rollers	As Needed
	Check o-Rings	As Needed
Mercury Analyzer	Check Tubing	Daily
	Change Tubing	Monthly
	Clean Probe	As Needed
	Clean Window	Daily
	Align Lamp	Daily
Spectrophotometer	Clean Cell	After every use
	Clean Windows	At beginning of each run
	Calibrate Wavelengths	Polystyrene - monthly
UV/VIS	Clean Cell	After every use
	Clean Windows	At beginning of each run
	Calibrate Wavelengths	Monthly
Ion Selective Probes	Clean Probe	After every use
	Check Probe for Cracks	At the beginning of each run
	Check Reference Junctions	At the beginning of each run
	Check Probe Solutions	Prior to each use

TABLE 10-1
PREVENTIVE MAINTENANCE SCHEDULE

INSTRUMENT	ACTIVITY	FREQUENCY
Conductivity Meter	Clean Probe	After every use
	Check Probe for Cracks	At the beginning of each run
	Check Standard Solutions	Prior to each use
BOD Meter	Check Membrane	With unstable reading
	Change Membrane	With unstable reading
Bomb Calorimeter	Clean Interior Parts	Every use
	Resurface Interior	Every 500 ignites
	Replace Platinum Wire	As needed
	Check Oxygen Tubing	Before each run
Turbidimeter	Clean Cell	With each use
Flashpoint Tester	Check tubing	With each use
	Clean Sample Cup	With each use
	Check gas	With each use
	Clean Flash Assembly	With each use
	Check Stirrer	With each use
Balances	Check Accuracy	Daily
	Calibrate/Certify	Yearly
Ovens	Temperature Monitoring	Daily
	Temperature Adjustments	Daily
Incubators	Temperature Monitoring	Daily
	Temperature Adjustments	Daily
Refrigerators	Temperature Monitoring	Daily
	Temperature Adjustments	Daily
DI Water System	Check Conductivity	Daily
	Check pH	Daily
	Change Resin Beds	Every two months or more often if necessary

11.0 QUALITY CONTROL CHECKS AND ROUTINES TO ASSESS PRECISION, ACCURACY, AND CALCULATION OF METHOD DETECTION LIMITS

11.1 Method Blanks

Method blank analyses are used to estimate the level of contamination due to laboratory reagents, labware and apparatus. Control limits are established based upon client requirements. If no client specifications are available, the blank contamination is evaluated by the laboratory supervisors and managers to determine how the results affect customer sample results.

11.2 Replicate Analyses

Replicate analyses will be used to estimate the precision of each analytical test procedure for a known matrix. Data control limits will be established to satisfy the requirements of specific measurement projects, and defined in the project forms.

11.3 Spiked Samples

Spike control sample analyses will be used to estimate analyte recovery (accuracy) for each test procedure for a known matrix. Data control limits will be established to satisfy customer requirements and will be defined in the contract directive.

11.4 Intralaboratory Analyses

The QAM submits periodic blind samples to the laboratory. This sample may be spiked with common analytes, or may be a reagent blank used to assess background over long term. These blind samples will provide an independent verification of the analytical processes. Results of these blind samples will be summarized and reported to the Laboratory Managers and General Manager. The QAM reviews the submitted QC data and makes recommendations, suggests changes, and/or requires corrective action(s) based on results and observations. The QAM reports the findings directly to the General Manager.

11.5 Interlaboratory Analyses

In addition to the internal QC Program, the laboratory will participate in collaborative testing comparison programs. As a minimum, the laboratory will actively participate in the US EPA Interlaboratory Quality Assurance Program and the NIOSH Proficiency Analytical Testing Program. The QAM reviews the submitted QC data and makes recommendations, suggests changes, and/or requires corrective action(s) based on results and observations. The QAM reports the findings directly to the General Manager.

11.6 Determination of Detection and Quantitation Limits

11.6.1 Instrument Detection Limits

An Instrument Detection Limit (IDL) is the smallest signal which is reliably detected above the background noise. Instrument Detection Limits are measured primarily for metals analyzed by atomic absorption spectrophotometry (AAS) and inductively coupled plasma (ICP). The IDL should be determined when new equipment is acquired, after major instrument repairs, and when required by specific contracts. For example, CLP contracts require quarterly determination of detection limits. The IDL is obtained by the following procedures:

o A standard is prepared at 3-5 times the level of the estimated detection limit.

o On 3 non-consecutive days, 7 consecutive measurements of the standard are obtained. The standard is treated as a sample, with rinses or blanks run between each replicate.

o The average of the daily standard deviation is multiplied by three to obtain the IDL.

11.6.2 Method Detection Limits

A Method Detection Limit (MDL) is the minimum concentration that can be measured with 99% confidence that the analyte is greater than zero. MDL's are determined from the analysis of spiked blank waters and soils.

Method Detection Limits should be measured for all new tests. Both water and soil matrices should be tested. The procedure is defined in 40CFR Part 136, Appendix B (Federal Register, October 26, 1984). The procedure is outlined below:

o An estimate of the detection limit is made.

o A minimum of seven replicates of blank water or soil are spiked at a level 1-5 times the estimated detection limit. When appropriate, spike compounds are added.

o The spiked samples are processed through every step of the analytical method.

o The standard deviation for the seven samples is multiplied by 3.143 (students t-score at 99 confidence at n-1 degrees of freedom) to obtain the MDL.

11.6.3 Practical Quantitation Limits

The Practical Quantitation Limit (PQL) is the lowest level that can be reliably achieved within specified limits of precision and accuracy during routine laboratory operation conditions. EPA's SW846 provides PQL's for typical matrices-groundwater, soils, and wastes. Quantitation Limits are based on the knowledge of an instrument's response and day-to-day precision. The quantitation limit must exceed the laboratory MDL. The MDL study verifies the capability of the laboratory to detect the compounds at the quantitation limit. Usually, one of the calibration standards in each run is performed at the quantitation limit.

11.7 Quality Assessment

o Accuracy
o Representativenes
o Precision
o Comparability
o Completeness

All measurements generated for this program will be completed in a manner which insures that they are representative of matrix and conditions being measured. In order to achieve these objectives, high standards for data quality will be used to guarantee the reliability of the data being generated.

Accuracy: The agreement between the amount of an average measurement by a specific test method with the true (or accepted) value. AEN-MD uses the following checks for accuracy assessment: the laboratory control sample (LCS or blank spike), matrix spikes, NIST or EPA traceable primary standards, continuing calibration standards, and method blanks.

Accuracy is calculated by:

$$Percent\ Recovery = \frac{concentration\ measured}{known\ (true\ value)} X\ 100\%$$

NOTE: For matrix spikes, sample background concentration must be corrected for prior to determining % recovery.

Precision: The degree of mutual agreement among individual measurements, relative to a single test procedure, and under set testing conditions. AEN-MD uses the following checks for precision assessments: duplicate samples (digested and undigested), matrix spike duplicates, and blank spike duplicates

American Environmental Network, Inc. uses the following checks for precision assessment: duplicate samples (digested and undigested), matrix spike duplicates, or blank spike duplicates.

Precision is calculated by:

$$RPD = \frac{|sample - duplicate|}{(sample + duplicate)\ /\ 2} X\ 100\%$$

Completeness: The measurement of the amount of valid data obtained from a system compared to the amount of data anticipated under normal operating conditions. In order to achieve the desired level of completeness, it is necessary to have a sufficient quantity of sample provided to the lab for repeat analysis in case the original analysis fails to meet the acceptance criteria. The desired level of completeness is 100%, however, a level of 90% should be considered acceptable.

$$Completeness = \frac{number\ of\ successful\ measurements}{number\ of\ requested\ analyses} X\ 100\%$$

Representativeness: The expression of the degree to which data accurately and precisely represents an environmental or process condition. Field sampling operations have a major impact on data representativeness. Factors including site selection, sample homogenization, sampling tools, equipment cleaning procedures, sample preservation, and others must be considered. Similarly, laboratory operations could impact upon representativeness if there were day-to-day fluctuations in methodology. Except when analysis for volatile compounds is required, samples are mixed well prior to taking subsamples. Liquid samples are shaken vigorously prior to aliquoting and soils are stirred well with a spatula.

Comparability: Expresses the confidence with which one data set can be compared with another. This quality indicator is enhanced by the following controls used at American Environmental Network, Inc.:

- Standardized EPA approved methodology for sample preservation, holding times, analysis.
- Consistent reporting units for each parameter in similar matrices.
- EPA- or NIST-traceable standards when available.
- Frequent analysis of outside source QC samples.

- Participation in interlaboratory performance evaluation studies.

- Frequent performance and system audits.

11.8 Quality Control Charts

To date, control charts have been kept on a per client basis or per contract basis. It is AEN-MDs intent to incorporate all quality control data into control charts as soon as sufficient data points are generated.

Control charts are prepared in order to plot values for lab control samples, surrogate spike, and matrix spike recoveries. Results from each matrix must be charted separately. Control limits are statistically calculated from a minimum of 5 initial data points and every 20 data points thereafter.

Control limits for accuracy are defined as follows:

$$\textit{warning limits} = \textit{mean}\ (\bar{x})\ \pm 2\,(\textit{standard deviation})\quad (2\sigma)$$

$$\textit{control limits} = \textit{mean}\ (\bar{x})\ \pm 3\,(\textit{standard deviation})\quad (3\sigma)$$

Results which exceed the warning limits but not the control limits alert the analyst to potential problems. Sample results are accepted, but the procedures and standards are checked. If the lab control sample exceeds the control limit, the analyst, supervisor, and QAM investigate potential causes of the problem. After the cause is determined and corrected, samples from the original set are rerun along with duplicate spiked samples and a lab control sample. Control limits are recalculated periodically. The frequency of this is dependent on the number of data points accumulated.

QC sample results are to be plotted on a daily basis so that findings may be promptly evaluated. The charts are used to detect trends before an out-of-control situation develops. Examples of situations to monitor closely include:

- Values outside of control limits.
- Four (4) or more consecutive points on one side of the midpoint range of the chart.
- Gradually increasing or decreasing response.
- Cyclical patterns.
- Broadened range of response.

In any case, the out-of-control lot must be reanalyzed. The out-of-control situation and corrective actions taken must be fully documented. No data points from an out-of-control lot will be used to update control charts. Each point should be annotated with a reference to the investigation and to the disposition of samples and results.

Precision

Control charts for precision are plots of the relative percent difference (RPD) between pairs of sample duplicates or matrix spike duplicates. RPD is calculated as 100% x (range/average). Each matrix should be plotted separately. Also, since precision is typically concentration-dependent, care must be taken to chart low-level and high-level samples separately.

The control levels for precision are defined as:

$$warning\ limits = \overline{RPD} \times 2$$

$$control\ limits = \overline{RPD} \times 3.$$

11.9 On-Site/Mobile Laboratories

11.9.1 Due to the nature of on site laboratories and client requirements, some types of QC samples are used with different degrees of frequency than at the main laboratory.

11.9.2 Refer to the QAPP for project specific QC requirements.

12.0 DATA REDUCTION, VALIDATION AND REPORTING

12.1 Reduction

In order to maintain the quality of laboratory data, great attention is paid to the accuracy and completeness of data records. Ink is used for all notebook entries. Corrections in notebooks and raw data are made with a single line drawn through the error, dated, and initialed by the analyst. Erasures and white out are expressly forbidden in any raw data.

Auxiliary data produced for internal records and not reported to clients unless requested as part of the analytical data, includes the following: laboratory worksheets, laboratory notebooks, sample tracking system forms, instrument logs, instrument outputs, standards records, maintenance records, calibration records, and associated quality control. The sources are available for inspection during audits and to determine the validity of data.

The analytical data is generated from the GC/MS computer software, GC integrator software, AA, and associated laboratory instrumentation. The outputs may include identifications of compounds, concentrations, retention times, and comparisons to standards. Outputs are in graphic form (chromatogram), bar graph (spectra) and printed tabular form. The outputs are in standard format specified for each analysis and are monitored for consistency. If incomplete or incorrect output is received, corrective actions are taken according to procedures established for each type of analysis and consistent with the manufacturers' recommendation.

Data for inorganic (nonmetal) compound analyses are recorded in bound notebooks assigned for each test (Figure 12-1). The required information for each analysis includes but is not limited to: the analytical procedure; any procedure changes required; AEN-MD internal sample number; raw analytical data; standard solutions used; preparation of reagents when appropriate; signature and date.

For metals analysis, a digestion log is maintained in a separate notebook (Figure 12-2). The digestion is documented by record of AEN-MD internal sample number, sample volume, elements, method, spike true value, date and initials. Digital printouts of results are obtained for graphite furnace and ICP analyses.

Final calculation of results for ICP, GFAA, and CVAA are recorded directly on their respective printouts. This includes instrument identification, AEN-MD internal sample number, initial result, dilution or concentration performed, final results, true value of QC or spiked samples, percent recovery obtained, and comments. Each data set is paginated and filed in the metals data notebook.

Data for organic compound extraction techniques are recorded on custom designed, preprinted Sample Workup Sheets (Figure 12-3). All details regarding the extraction are recorded on this form. The data includes the following entries: extraction method; sample matrix; extraction date; surrogate spiking solution number and concentration; matrix spiking solution numbers and AEN-MD sample identification number; sample amount; quantity of surrogate and matrix spike added; final extract volume; extract storage location and initials of chemist. One copy of the Sample Workup Sheet is kept in an extraction log book. A second copy of the sheet travels with the extracts to the analysis laboratory. Hard copy printouts of GC chromatograms, GC/MS mass spectra, IR printouts, and HPLC printouts are generated. All instrument printouts and compound identifications are checked manually and the instrument printouts are filed with the Sample Workup Sheets in the central file.

Figure 12-1

CHLORIDE

Date Started: _____ Date Completed: _____

Analyst: _____ Review/Date: _____

Method(s): _____ Notebook No. 2592

Control Source: _____ Spike Source: _____

Concentration: _____ Concentration: _____

(show calculation) (show calculation)

Titrant: _____ Standardization Date: _____

Sample ID	Sample Volume	Sample Weight	mL Titrant	Dil. Ratio	Conc. ppm	Comments

Figure -2

DIGESTION LOG FOR: ICP GFAA MATRIX: SOIL ( ) AQUEOUS ( ) TCLP ( ) AIR FILTER ( )

BATCH NUMBER _____ DATE _____ NOTEBOOK # 2714 _____ PAGE # _____ TECHNICIAN _____ REVIEW _____

CLIENT(S) _____ INITIAL DIGESTION ( ) REDIGESTION ( ) (EXPLAIN) _____

METHODS GFAA - ICP		200 FURNACE AQUEOUS	200.7 ICP AQUEOUS	CLP AA-ICP AQUEOUS	CLP AA-ICP SOILS	3005 ICP AQUEOUS	3010 ICP AQUEOUS	3020 AA AQUEOUS	3050 AA-ICP SOILS
AENI NUMBER	CLIENT ID	SPIKE VOL./ NUMBER	INITIAL WEIGHT/VOLUME	FINAL VOLUME (mL)	CLARITY	TEXTURE	H_2O_2 ADDED?	COMMENTS	
BLANK									
LCS									
1.									
2.									
3.									
4.									
5.									
6.									
7.									
8.									
9.									
10.									
11.									
12.									
13.									
14.									
15.									
16.									
17.									
18.									
19.									
20.									
21.									
22.									

Figure 12-3 (p1)

AMERICAN ENVIRONMENTAL NETWORK, INC.

NOTEBOOK 2450

BNA WATERS

PAGE

CLIENT

CHECKED

CONTRACT NUMBER

CASE

DATE

TECH

AENI #	CLIENT ID	VOLUME (ml)	SPIKE(s)	AMOUNT SPK(s)	AP PH / BN PH
					/
					/
					/
					/
					/
					/
					/
					/
					/
					/
					/
					/
					/
					/
					/
					/
					/
					/
					/
					/
					/
					/
					/
					/

_____SEPARATORY FUNNEL SOLVENT_____

_____CONTINOUS EXTRACTOR TIME ON_____TIME OFF _____

Figure 12-3 (p2)

AMERICAN ENVIRONMENTAL NETWORK, INC.

BNA WATERS

NOTEBOOK 2450

PAGE _____

CHECKED _____

CASE _____ DATE _____ TECH _____

CONCENTRATED DATE	BNA FINAL SOLVENT	BN FINAL VOLUME (ml)	AP FINAL VOLUME (ml)	CLEAN UP	COMMENTS

COMMENTS _____

CHECKLIST: DATA COMPLETE__CORRECT SURG/SPK__CORRECT AMT SURG/SPK__SAMPLE VOLUME__CORRECT FINAL SOLVENT__FINAL VOLUME__CLEAN-UP__VARIATIONS__

MANAGER'S INITIALS____ DATE____

12.2 Validation

Prior to reporting, data are evaluated using strict control levels. The data and report for each environmental chemistry project receive a minimum of three levels of review and validation as discussed below. (Figure 12-4).

12.2.1 First Level Review

All data receive a 100% review by either the supervisor or a second analyst of equal or higher experience and responsibility than the analyst performing the original work. This review validates that the quality control requirements have been appropriately met.

This review covers the following points:

- Transcriptions are checked for accuracy and use of appropriate units.
- QC data are reviewed to assure that internal specifications and contract requirements have been met.
- Project Discrepancy Reports, if any, are reviewed for completion, corrective action, and impact upon results. Information contained in the Project Discrepancy Report may need to be included in the narrative report to the client.
- Results make sense compared to historical information about the site and results for other parameters tested at the same time.

12.2.2 Second Level Review

After the supervisor or designee reviews and approves the report, it is submitted to the Laboratory Manager for final technical approval and issuance to the Project Manager. A copy of the signed report is retained in the project file for archiving.

Data are centralized into a project file. Data for the analyses provide a complete audit trail. Data notebooks and data sheets correctly reference the analytical method, the standard solution used, AEN-MD internal sample numbers, original data values, sample results in correct units, calculation formula for all conversions, signature of the analyst, and the date. Instrument printouts must identify the person responsible for the data generation and the date of the run.

12.2.3 Third Level Review

The Project Manager then reviews the document against the specification on the contract directive. If all client specifications are met, the Project Manager releases the report. The third level review may also be performed by the General Manager or QAM.

12.3 Reporting

AEN-MD has 6 standard reporting levels depending on the needs of the client. The CLP convention of naming forms (I-XIV) is used by all departments.

12.3.1 Level 1

- Sample and blank results.
- Surrogate recoveries many also be included.

12.3.2 Level 2

- Sample and blank results.
- Surrogate recoveries.
- Matrix spike/Matrix spike duplicate results.

12.3.3 Level 3

- Sample and blank results.
- Summary of all associated QC parameters (including but not limited to surrogates, spikes, internal standards, and calibrations(.

12.3.4 Level 4

- Prepared especially for New Jersey Reduced Deliverable requirements.
- Includes all deliverables for Level 3, along with requested raw data.

12.3.5 Level 5

- This is a full CLP deliverables package, including raw data, for non -CLP methodologies.

12.3.6 Level 6

- This is a full CLP deliverables package for current EPA CLP SOWs.

12.4 On Site Laboratory

12.4.1 Refer to the QAjPP for specific requirements for the data reduction, validation and reporting at the OSL.

12.4.2 Refer to the QAjPP for examples of reporting forms used at the OSL.

12.4.3 Examples of notebook pages for project specific methods performed at AEN-MD's Columbia, Maryland facility are available for review at the laboratory.

Figure 12-4

PACKAGE APPROVAL FORM

Customer:_____

Job #:_____

Analyst Approval: _____ Date: _____

Peer Approval: _____ Date: _____

Manager/Supervisor Approval: _____ Date: _____

PLEASE NOTE THAT EFFECTIVE 2/9/94 THIS FORM IS TO ACCOMPANY ALL DATA PACKAGES TURNED IN TO PROJECT MANAGEMENT OR QUALITY ASSURANCE AS COMPLETED AND READY TO GO TO THE CLIENT. NO DATA WILL BE ACCEPTED OR REVIEWED WITHOUT THIS FORM.

o:\admin\marsha\dataqcv\approval.pkg

13.0 CORRECTIVE ACTION/PROJECT DISCREPANCY

Documentation of analytical problems and corrective action taken is an essential part of the data record for each project. Identification, implementation, and monitoring of the actions that could have prevented the analytical problem provide a method for improving the quality of laboratory performance. A Project Discrepancy Report (PDR) sheet has been designed to record problems, corrective actions, impact on analytical results, and suggested preventive actions for the future. A copy of this report sheet is included as Figure 13-1.

The PDR must show complete background information about the event, including date and shift, analysis and phase, the client name, the sample identification number, and a description of the event which occurred. The report must further include the corrective action taken; indication of the status of the system; an assessment of impact of analytical results; and suggestions for preventive action.

The PDR is initiated within the same shift as the occurrence by the person experiencing or noticing the discrepancy and completed by his or her supervisor. For example, the initiator provides the description of the event and corrective action taken and the supervisor adds the impact and preventive action.

The report is forwarded to the Laboratory Manager and the Project Manager , who assess the overall impact and need for follow-up. The Project Manager will contact the client if there is potential impact on analytical results. Once the non-conformance situation has been resolved, a copy of the report is forwarded to the QA Manager. The QAM will review the PDR to ascertain adequate resolution of each event and to detect trends. Any cases or apparent trends that the QAM feels require further investigation or follow-up are discussed with the Laboratory Manager and the supervisor. The PDR is filed in the QA office. All effective preventive action is documented for all appropriate laboratory sections. Supervisors of each area are responsible for any SOP revision needed to reflect these preventive actions.

Initial preventive action plans which are evaluated as being ineffective, cause an investigation to be performed to identify the cause of the problem and the effective preventive action. This investigation is led by the supervisor of the area where the initial problem occurred and the QAM. Progress of the investigation is reported to the General Manager and filed in the QA Office.

AMERICAN ENVIRONMENTAL NETWORK, INC.
PROJECT DISCREPANCY FORM
(CORRECTIVE ACTION RECORD)

Figure 13-1 (p1)

To: _____ Date: _____

Submitted By: _____ AENI #: _____

Client: _____ Project: _____

****

Identification of Problem: _____

_____

_____

_____

_____

Section : _____ Method: _____

Instrument ID: _____

****

Analyst Comments/Suggested Corrective Action:

Analyst/Date: Date:

****

Section Supervisor Comments/Suggested Corrective Action:

Section Supervisor/Date: Date:

****

Use this area to describe actual Corrective Actions taken to address the problem

THIS IS A TWO PAGE DOCUMENT - PLEASE TURN OVER

Laboratory Manager's Comments: Gigure 13-1 (p2)

Laboratory Manager/Date:

****

Quality Assurance Review and Approval:

QA Officer: Date:

****

Scheduled follow-up by QAO: _____

Findings: (include date of follow-up and signature)

MONTHL' 'NERAL AUDIT

Date _____
Auditor. _____
Lab Section: _____
Instrument: _____
Page: __ of __

SECTION 5. STANDARDS LOGBOOK.

Y	N	
		_____
__	__	Verify that standards in use are documented in the standards logbook.
__	__	Can the manufacturers certificate be found? This is a requirement of the SOP.
__	__	Can standards be traced back to either the neat product or purchased stock?
__	__	Verify a calculation in the notebook. (Describe in comments section).
__	__	Are daily standards documented in either to main log or in a separate notebook? This is very important in verifying day to day operations. (Verify and describe in comments section.)
__	__	Is there evidence of a managers review of the notebook?
__	__	Are stock chemicals or purchased mixes labelled with date of receipt, opening, and expiration? Are any out of date?
__	__	Are stock and working standards completely and properly identified? (Dates of prep, expr, conc. ETC) Are any out of date?
__	__	Are those stock standards requiring standardization being standardized? Is there documentation?

Reference: SOP 10-003 Rev O
O:\MTHAUDIT\SECTION5.STD

Dat _____
Auditor. _____
Lab Section: _____
Instrument: _____
Page: __ of __

SECTION 6. ANALYTICAL NOTEBOOKS

Y	N	
		_____
__	__	Does the notebook have a unique number assigned?
__	__	Is the notebook permanently bound and paginated?
__	__	Is permanent black ink being used?
__	__	Are entries legible and do they follow standard good laboratory documentation practices. (Single line no whiteout, empty spaces at bottom of pages lined through with a date).
__	__	If the analysis requires the use of a balance, is the balance clearly identified?
__	__	Is the analyst dating and initialling the notebook?
__	__	Is there evidence of supervisor review (date, initial).
__	__	Is there an example calculation provided in the notebook?
__	__	Is there an SOP available for this method? What is the SOP number and its effective date (put in comments section).
__	__	Is the SOP current or does it need revision? (Describe finding in comments section.)

Dat _____
Auditor: _____
Lab Section: _____
Instrument: _____
Page: __ of __

SECTION 7. BALANCE LOGBOOKS

Y	N	
		_____
__	__	Is logbook present for balance chosen?
__	__	Does the log clearly indicate the balance that it applies to?
		Are conditions of the balance area acceptable:
__	__	Is the area around the balance clean?
__	__	Is the balance itself clean?
		Does the log indicate:
__	__	Date the balance was calibrated (this can also be found on the balance itself)?
__	__	Acceptance criteria for the weights used?
__	__	Are weights used applicable to range of sample amount needed for the analysis?
__	__	Are the entries dated and initialed?
__	__	Is there evidence of supervisor review?
__	__	Pull several notebooks for each section and verify that the balance used for that analysis was calibrated on the day in question. Describe in comments section.

Date _____
Auditor: _____
Lab Section: _____
Instrument: _____
Page: __ of __

SECTION 8. REAGENT LOGBOOKS

Y	N	
		_____
__	__	Verify that the reagents in use are documented in the reagent logbook.
__	__	Can materials used to prepare the reagents be traced back to the manufacturers lot number. This is a requirement of the SOP.
__	__	Verify a calculation in the notebook. (Describe in comments section).
__	__	Are daily standards documented in either to main log or in a separate notebook? This is very important in verifying day to day operations. (Verify and describe in comments section.)
__	__	Is there evidence of a managers review of the notebook?
__	__	Are stock chemicals or purchased mixes labelled with date of receipt, opening, and expiration? Are any out of date?
__	__	Are reagents completely and properly identified? (Dates of prep, expr, conc. ETC) Are any out of date?
__	__	Are those reagents requiring standardization being standardized? Is there documentation? Verify a calculation.

Reference: SOP 10-003 Rev O
O:\MTHAUDIT\SECTION8.RGT

15.0 QUALITY ASSURANCE REPORTS TO MANAGEMENT

The Quality Assurance Department reports their acuities and finding to Management in various ways:

- Immediate verbal notification if an emergency situations arises;
- Thorough written reports of data audits;
- Thorough written reports of general audits;
- Thorough monthly reports of the following quality indicators of holding times, PE results, and external audit findings.

APPENDIX A

LABORATORY FLOOR PLAN

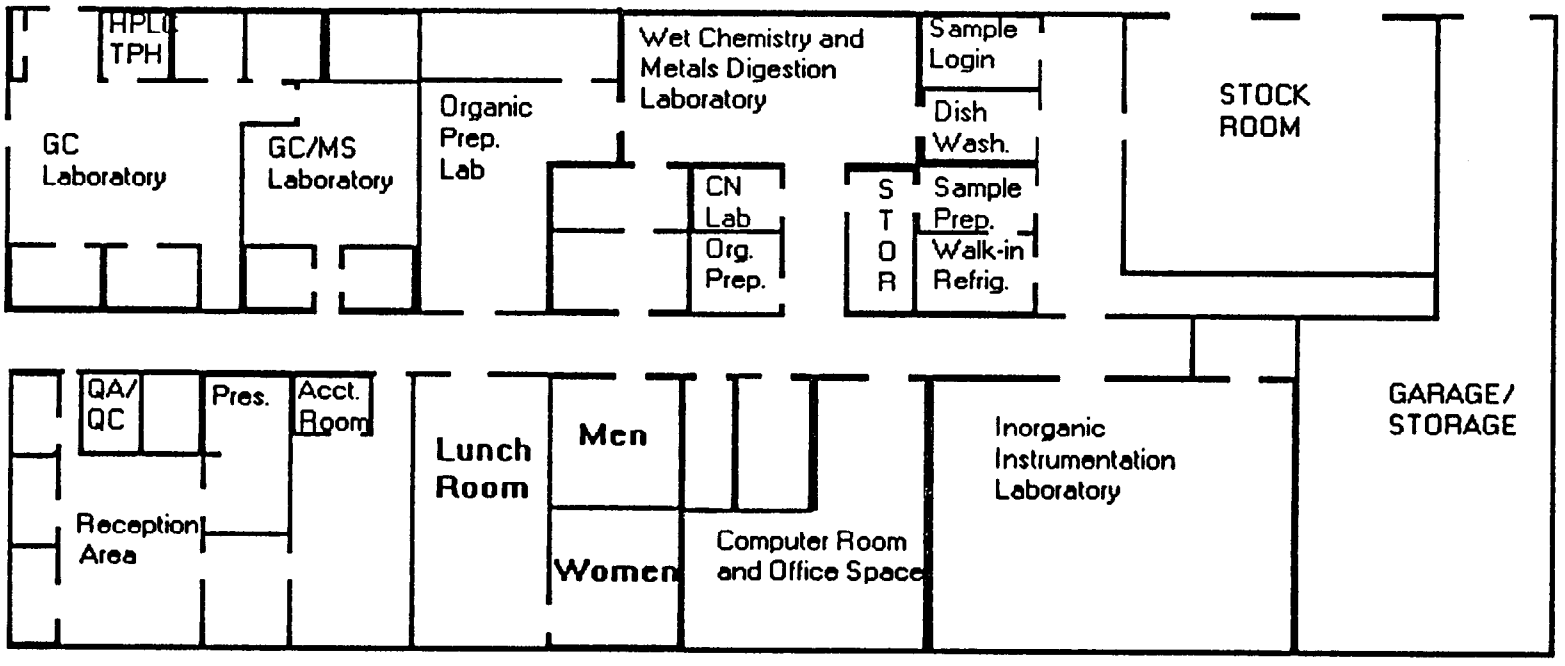

FLOOR PLAN

AMERICAN ENVIRONMENTAL NETWORK, INC.

APPENDIX B

LABORATORY CERTIFICATIONS

VALIDATIONS AND CERTIFICATIONS

Organization	Branch/Agency	Parameters
U.S. Army Corps of Engineers (USACE)	Missouri River Division (MRD)	All, including Explosives by EPA 8330 and Chemical Agent Degradation Products
State of Maryland	DHMH	Drinking Water Metals Pesticides Wet Chemistry
Commonwealth of Virginia	DGS	Drinking Water Inorganics Organics VOCs
State of North Carolina	EHNR/DEM	Inorganic and Organic Parameters
State of California	DHS	Hazardous Waste Organics Inorganics Physical Properties
State of New Jersey	DEPE	Drinking Water Wet Chemistry Metals Organics Water Pollution Wet Chemistry Metals Organics
State of South Carolina	DHEC	Water Pollution Inorganic/Organics Hazardous Waste Inorganic/Organics
State of New York	SDH	Air and Emissions Non-Potable Water Hazardous Waste
State of Delaware	DPH	Drinking Water
Commonwealth of Pennsylvania	DER	Drinking Water
State of Connecticut	DHS	Water Pollution Inorganic/Organics Hazardous Waste Inorganic/Organics

APPENDIX C

STAFF RESUMES

TECHNICAL STAFF

The professional staff of American Environmental Network, Inc. is constantly striving to improve its performance by pursuing post-graduate and graduate studies, attendance at appropriate training and industry symposia, and active participation in professional associations. The following are tables of laboratory staff and brief resumes of key personnel.

AMERICAN ENVIRONMENTAL NETWORK (MARYLAND), INC.
LABORATORY SUPERVISORY STAFF

NAME AND TITLE	EDUCATION		DATE OF DEGREE	PRIMARY RESPONSIBILITY
	DEGREE	MAJOR		
LARRY FRANTZ	B.S.+	CHEMISTRY	1979	GENERAL MANAGER
MARSHA BURRELL	B.S.	BIOLOGICAL SCIENCES	1980	QUALITY ASSURANCE OFFICER
THUY NGUYEN	M.S.	CHEMISTRY	1974/1976	GC/MS MANAGER
ANITA KIJAK	M.S.	CHEMISTRY	1982/1987	METALS MANAGER
CHARLES FERRIN	B.S.	BIOCHEMISTRY	1985	GC/LC MANAGER
MARY COLBURN	B.S. +	CHEMISTRY	1973	PRINCIPLE CHEMIST
NOBLE NEMIEBOKA	B.S.	CHEMISTRY	1987	GC/LC ASSISTANT MANAGER
JOHN CAMPBELL	B.S.	PHYSICAL SCIENCE	1991	PREP LAB SUPERVISOR
VINCENT KUYAWA	B.S.	CHEMISTRY	1985	PROJECT OPERATIONS DIRECTOR
RHONDA GREEN-BARRON	B.S.	CHEMISTRY	1990	GENERAL CHEMISTRY MANAGER
JOYCE DAUPARAS	B.A.	CHEMISTRY	1990	LOGIN SUPERVISOR

April 1995

AMERICAN ENVIRONMENTAL NETWORK (MARYLAND), INC.
LABORATORY STAFF

NAME AND TITLE	EDUCATION		DATE OF DEGRE	PRIMARY RESPONSIBILITY
	DEGREE	MAJOR		
ELIZABETH PICKERAL	B.S.	CHEMISTRY	1983	GC ANALYST
WENDY WANG	M.S.	CHEMISTRY	1988/1990	GC ANALYST
ERNESTINE BLANGO	B.S.	BIOLOGY	1987	GC ANALYST
EDMOND YUE	B.S.	BIOLOGY	1984	GC/HPLC ANALYST
LEE BRAY	B.S.	CHEMISTRY	1983	GC/MS ANALYST
ROY COLLETON	B.S.	CHEMISTRY	1979	GC/MS ANALYST
CHRIS GIANNARAS	B.A.	BIOLOGICAL SCIENCES	1986	GC/MS ANALYST
WALDU FEKADU	B.S.	CHEMISTRY	1985	GC/MS ANALYST
'CTORIA KRASNOVSKAYA	M.S.	PHYSICS	1967	ORGANIC PREP ANALYST
ROBERT BOARDLY	A.A.	MORTUARY SCIENCE	1988	METALS ANALYST (AA)
JOHN MASSEY	H.S.			METALS ANALYST (ICP & AA)
CHERYL DAVIS	A.S.	Chemical Technology	1985	GENERAL CHEMISTRY ANALYST
LINDA SAXON	B.S.	ENTOMOLOGY	1985	ORGANIC PREP, GENERAL CHEMISTRY
BARBRA TRULICK	B.S.	ENV. BIOLOGY	1993	SAMPLE MANAGEMENT
WILLIAM GLASER	B.B.	CIVIL ENGR/ GEOLOGY	1981	QUALITY ASSURANCE

April 1995

LARRY J. FRANTZ

Current Position:	General Manager and Laboratory Director
Education:	B.S. (Chemistry/Computer Science), Lawrence Technological University, Southfield, MI Graduate Work, Oakland University, Rochester, MI.
Years of relevant experience:	20
Areas of expertise:	All areas of laboratory management, especially environmental work. Management of special environmental projects, and working closely with clients on these projects. Designing, writing and utilizing computer programs for laboratory management (including sample tracking, data entry, QA/QC, report generation). All environmental analysis techniques. Designing analytical and QA/QC programs to solve clients' problems.

VINCENT J. KUYAWA

Current Position:	Project Operations Director
Education:	B.S. (Chemistry), Loyola College, MD, 1985
Years of relevant experience:	8
Areas of expertise:	Manages department of project managers, sample receiving and handling personnel, couriers, and all facets of client services. Responsible for all facets of client services as it relates to laboratory production. Handles major client's requests, including special formatting of reports, priority/emergency project turnaround, scheduling, bottle supply, etc. Coordinates with laboratory supervisors, field sampling personnel, and clients to meet project requirements. Performs sample tracking through the Laboratory Information Management System. Administers individual multi-layer quality assurance reporting depending on client request; coordinates these efforts with quality assurance officer to maximize sample throughput, review, and remedial action when necessary.

PATRICIA J. ROACH

Current Position:	Project Manager
Education:	B.S. (Chemistry), University of New York, Geneseo, NY, 1988
	Chemical Officers Course, U.S. Army Chemical School, Ft. McClellan, AL, 1989
	Radiation Protection Officers Course, 10 Medical Laboratory, Kaiserslautern, Germany, 1989
	OSHA Health and Safety Course, NY/NJ Haz. Waste Training Center, Piscataway, NJ, 1992
Years of relevant experience:	6
Areas of expertise:	Responsible for all facets of client services as it relates to laboratory production. Handles major client's requests, including special formatting of reports, priority/emergency project turnaround, scheduling, bottle supply, etc. Coordinates with laboratory supervisors, field sampling personnel, and clients to meet project requirements. Performs sample tracking through the Laboratory Information Management System. Provides on demand updates of project status to clients. Insures data package integrity specific to individual client requirements.

MARSHA J. BURRELL

Current Position:	QA Officer
Education:	B.S. (Biological Sciences), Salisbury State University, MD, 1980
Years of relevant experience:	14
Areas of expertise:	Supervises quality assurance program, reporting directly to the Laboratory Director. Introduces blind spikes, replicates, blanks, and standards into the sample chain, handles quality control data, insures accuracy charts and precision tables are kept current, and that out-of-control situations are remedied. Coordinates performance evaluation sample analysis programs. Experienced in data validation.

ANITA L. KIJAK

Current Position:	Metals Laboratory Manager
Education:	M.S. (Environmental Chemistry), University of Maryland, College Park, MD, 1987 B.S. (Chemistry), Adelphi University, Garden City, NY, 1982
Years of relevant experience:	7
Areas of expertise:	Directs daily activities of Metals department. Responsible for coordinating and monitoring projects, staff, and equipment of the Laboratory. Primary responsibilities include increasing laboratory efficiency and improving data quality. Prepares and approves Standard Operating Procedures (SOP's) for laboratory use. Reviews all reports for data quality and QC compliance.

RHONDA J. GREEN-BARRON

Current Position:	Wet Chemistry Laboratory Manager
Education:	B.S. (Chemistry), California State University, San Bernadino, CA, 1990
Years of relevant experience:	4
Areas of expertise:	Directs daily activities of Wet Chemistry department. Increases laboratory productivity and improves data quality. Prepares and edits Standard Operating Procedures (SOP's) for laboratory use. Reviews and implements corrective actions in response to out-of-compliance reports.

MINH-THUY NGUYEN

Current Position:	GC/MS Laboratory Manager
Education:	M.S. (Chemistry), University of Delaware, 1979
	B.S. (Chemistry/Math), Mary Washington College, VA, 1976
Years of relevant experience:	15
Areas of expertise:	Manages GC/MS Organics Laboratory. Responsible for problem solving, production and personnel scheduling, training, QA/QC protocol development, and methods development. Develops software for client-specific report requirements (e.g. automated printing of chromatograms/data to provide visual representation of data); and develops sample extraction and sample clean-up techniques.

CHARLES E. FERRIN, JR.

Current Position:	GC/LC Laboratory Manager
Education:	B.S. (Biochemistry), University of Maryland, College Park, MD, 1985
Years of relevant experience:	7
Areas of expertise:	Manages the GC/LC department performing pesticide/PCB, herbicide, and volatile analysis using gas chromatography, and explosives and PAH analysis by HPLC. Maintains adherence to EPA and other procedures and QC requirements during analysis. Reviews results and reports data. Maintains experience with ECD, FID, ELCD, and PID on HP5880 and HP5890 GC's, and Waters HPLC, and provides training.

KETTYA OK

Current Position:	Systems Analyst
Education:	B.A. (Chemistry), George Mason University, Fairfax, VA, 1985
Years of relevant experience:	7
Areas of expertise:	Responsible for the overall computer related operation of the company. Maintains various hardware and software used in support of the analytical services; develops and implements new LIMS software packages and facilities. Manages production of extensive electronic data package submittals for major projects and clients.

APPENDIX D

SOP INDEX

AEHI LABORATORY
STANDARD OPERATING PROCEDURES
INDEX

TITLE	SOP NO.	REVISION	DATE
SAMPLE HANDLING, STORAGE, AND DISPOSAL			
BOTTLE PREPARATION AND TRACKING OF BOTTLE LOTS: HAZWRAP	1307	0	8/22/89
GUIDELINES FOR DISPOSAL OF SAMPLES WITH PCB	1606.1	1	
GUIDELINES FOR SAMPLE DISPOSAL	1610	1	2/6/92
GUIDELINES FOR DISPOSAL OF ACID WASTE, SOLVENT WASTE, AND PYRIDINE WASTE	1606	2	1/2/92
HEALTH AND SAFETY PROCEDURES FOR HAZARDOUS SAMPLE PREPARATION AND ANALYSIS	1607	1	8/1/85
HOLDING TIMES, CONTAINERS, AND PRESERVATIONS FOR ENVIRONMENTAL SAMPLING - OTILLO LANDFILL PROJECT	1300	0	6/5/92
LABORATORY SAMPLE CONTAINERS AND HANDLING PROCEDURES	1306	1	6/5/925
PRESERVATION AND HOLDING TIMES FOR INORGANIC AND ORGANIC COMPOUNDS: SOIL	1302	0	3/28/85
PREPARATION OF FIELD AND TRIP BLANKS (NEW JERSEY REQUIREMENTS)	1350	0	6/5/92
PRESERVATION AND HOLDING TIMES FOR INORGANIC AND ORGANIC COMPOUNDS: WATER	1301	0	5/17/84
PRESERVATION AND HOLDING TIMES FOR INORGANIC AND ORGANIC COMPOUNDS: DRINKING WATER SAMPLES	1301.1	1	4/24/92
RESIDUAL CHLORINE TEST FOR DRINKING WATER SAMPLES	1304.2	0	4/24/92
SAMPLE RECEIPT AND LOGGING	1304	1	1/9/92
SAMPLE RECEIPT AND LOGGING OF DRINKING WATER SAMPLES	1304.1	0	4/24/92
SAMPLE RECEIPT AND LOGGING - EPA CLP	4509	1	9/29/87
SAMPLE STORAGE AND MAINTENANCE EPA CLP	4508	1	2/11/87
SAMPLE STORAGE AND MAINTENANCE	1303	1	5/16/84

AENI LABORATORY
STANDARD OPERATING PROCEDURES
INDEX

TITLE	SOP NO.	REVISION	DATE
GENERAL LABORATORY INFORMATION			
CHAIN-OF-CUSTODY	1402	0	5/16/84
CONTROL CHARTS	1550	0	7/31/92
DATA REVIEW AND QUALITY CONTROL REQUIREMENTS	1506	0	6/5/92
DATA REPORTING	1503	0	5/7/84
DISCUSSION OF REPORTING LEVELS [IN REVISION]	1203	0	2/2/92
DOCUMENT MAINTENANCE	1405	[in revision-suspended]	
AENI LABORATORY ORGANIZATION	1101	1	9/3/92
INITIATION AND USE OF PROJECT DISCREPANCY REPORTS FOR NOTICE OF NON-COMPLIANCE, DOCUMENTATION OF CORRECTIVE ACTION AND EVALUATION OF THE EFFECTIVENESS OF CORRECTIVE ACTIONS [IN REVISION]	10-002	0	1993
INSTRUMENT AND EQUIPMENT LOGBOOKS	2002	1	3/26/92
INSTRUMENT DETECTION LIMITS -EPA CLP- INORGANICS	1507	1	2/7/92
INSTRUMENT MAINTENANCE AND CALIBRATION FREQUENCY	2000	0	6/5/92
LAB SECURITY	1609	1	2/3/88
LABORATORY SAFETY	1601	1	10/1/85
MAINTENANCE AND DOCUMENTATION FOR ANALYTICAL STANDARDS AND REFERENCE MATERIALS LOGBOOKS	10-003	0	1993
PREPARATION, NUMBERING, AND USE OF STANDARD OPERATING PROCEDURES	10-001	0	1993
PROCEDURES FOR THE DETERMINATION OF THE METHOD DETECTION LIMIT	1501	3	2/12/92
PROCEDURES FOR CHANGES	1002	1	1/3/92
REQUISITION AND PURCHASE OF MATERIALS AND SERVICES	1003	1	2/10/92

AENI LABORATORY
STANDARD OPERATING PROCEDURES
INDEX

TITLE	SOP NO.	REVISION	DATE
MISC LABORATORY INSTRUMENTATION			
BALANCES ANALYTICAL AND TOP LOADER (in revision)	2401	1	5/10/87
HYDRO-SERVICE DE-I SYSTEM	2903	1	5/23/84
MANUAL MICROPIPETTING SYSTEM USAGE	2006	0	11/2/87
REAGENTS, SOLVENTS, AND GASES	1604	2	5/16/84
REFRIGERATION EQUIPMENT	1602	1	2/11/92
THERMOMETER CALIBRATION (in revision)	1210	1	2/6/92

AENI LABORATORY
STANDARD OPERATING PROCEDURES
INDEX

TITLE	SOP NO.	REVISION	DATE
WET CHEMISTRY PROCEDURES			
ACIDITY, ALKALINITY, AND PH MEASUREMENT	3037	0	2/7/85
AMMONIA IN WATER AND SLUDGE: MANUAL DISTILLATION	3020	1	7/3/84
ANION DETERMINATIONS (CHLORINE, NITRATE, AND SULFATE) USING ION CHROMATOGRAPHY	3040	0	2/85
BIOCHEMICAL OXYGEN DEMAND	3051	0	6/30/93
CATION EXCHANGE CAPACITY IN SOILS	3053	0	3/28/85
CYANIDE IN WATER AND SOIL: EPA SOW 1990	4540	1	3/24/92
CYANIDE IN WASTE OR LEACHATE (SW846)	3018	1	7/3/84
CYANIDE, AMENABLE TO CHLORINATION	3010	0	6/12/84
DETERMINATION OF BULK DENSITY OF SOIL SAMPLES	60-902	1	1994
DETERMINATION OF DISSOLVED OXYGEN IN WATER SAMPLES	60-112	2	1994
DETERMINATION OF PERCENT ASH USING ASTM D3174	60-900	1	1994
DETERMINATION OF PERCENT SOLIDS USING ASTM D2216	60-115	2	1994
DISSOLVED OXYGEN METER	2502	0	8/29/87
EXTRACTION PROCEDURE FOR TOXICITY SW846 - METHOD 1310	3005	0	5/2/84
FLUORIDE: ION SELECTIVE ELECTRODE - METHOD 340.2	3041	1	2/85
FREE IRON OXIDES IN SOIL	3043	0	3/28/85
HARDNESS - METHOD 130.2	313.0	0	1993
HEXAVALENT CHROMIUM IN WATER	3218.4	0	10/1/89
INORGANIC AND METALS GLASSWARE AND PLASTICWARE WASHING	70-100	0	1994
ION CHROMATOGRAPHY: DRINKING WATER SAMPLES - METHOD 300.0	3040.1	0	4/23/92
MOISTURE: SOIL	3019	1	7/6/84
NITRATE-NITRATE IN WATER AND SLUDGE - METHOD 353.3	3012	1	5/21/85
NITROGEN, AMMONIA: COLORIMETRIC	3034	0	2/8/85
PERCENT (%) SOLIDS	3024	1	11/3/87
PH IN SOIL	3050	1	2/13/87
PH IN WATER	3150.1	0	10/1/89
PHOSPHATE: SOIL AND SLUDGE	3023	1	7/3/84
PREPARATION AND LOGGING OF INORGANIC ANALYTICAL STANDARDS	1407	0	3/20/92

AENI LABORATORY
STANDARD OPERATING PROCEDURES
INDEX

TITLE	SOP NO.	REVISION	DATE
WET CHEMISTRY PROCEDURES, cont.			
SILICA IN SOLID SAMPLES	3013	1	4/42/85
SILICA, DISSOLVED: COLORIMETRIC	3035	0	2/85
SPECIFIC CONDUCTANCE	3120.1	1	7/14/86
STANDARD TEST METHODS FOR FLASH POINT BY PENSKY - MARTENS CLOSED TESTER	3033	1	5/21/85
SULFATE IN WATER AND SLUDGE: TURBIDIMETRIC	3014	1	7/6/84
SULFIDES IN SOIL AND SOLID WASTES (EPA 9030)	3058	1	5/21/85
TOTAL CYANIDE: WATER (335.2)	3335.2	1	10/4/85
TOTAL CYANIDE: SOIL AND SEDIMENTS	3335.5	1	10/4/85
TOTAL ORGANIC CARBON - BROS PROJECT	3415		
TOTAL PHENOL: 4-AAP	3420.1	1	5/9/84
TOTAL SUSPENDED PARTICLES: GRAVIMETRIC ANALYSIS OF FILTERS FOR BROS PROJECT	4162	0	10/3/90
TOTAL PHOSPHORUS: COLORIMETRIC	3038	0	2/8/85
TOTAL KJELDAHL NITROGEN IN WATER AND SLUDGE	3016	0	6/12/84
TOTAL SUSPENDED SOLIDS	3160.2	0	10/1/89
TOTAL DISSOLVED SOLIDS	3160.1	0	10/1/89
TOTAL CYANIDE: SOIL AND WATER (METHOD 335.2)	3007	1	5/21/84
TOXICITY CHARACTERISTICS LEACHING PROCEDURE (TCLP)	3100	0	7/28/92
ULTRAVIOLET-VISIBLE SPECTROPHOTOMETER			

AENI LABORATORY
STANDARD OPERATING PROCEDURES
INDEX

TITLE	SOP NO.	REVISION	DATE
METALS ANALYSES			
ACID DIGESTION OF SEDIMENTS, SLUDGES, AND SOILS	3026	0	5/5/84
ATOMIC ABSORPTION PERKIN-ELMER 5000	2303	1	4/28/85
ATOMIC ABSORPTION PERKIN-ELMER 3030	2304	0	8/31/92
DRINKING WATER METALS, GFAA QUALITY ASSURANCE CRITERIA AND PROCEDURES	3200.1	1	5/11/92
DRINKING WATER METALS, ICP QUALITY ASSURANCE CRITERIA AND PROCEDURES	3200.8	1	5/11/92
[FURNACE METALS - SW846 7000	3202	IN PREPARATION]	
FURNACE METAL: EPA SOW 1990	4525	0	2/18/92
GFAA METALS ANALYSIS OF PM10 FILTERS FOR BROS PROJECT	4163	1	5/16/85
[ICP METALS - SW846 6010	3201	IN PREPARATION]	
ICP METALS: EPA SOW 1990	4520	1	3/20/92
ICP SCREENING AT BROS	4155		
ICP INSTRUMENT, PERKIN - ELMER 6500	3036	0	9/1/87
ICP METALS ANALYSIS OF PM10 FILTERS FOR BROS PROJECT	4162	0	10/3/90
INDUCTIVELY COUPLED PLASMA - ATOMIC EMISSION SPECTROMETRIC METHOD FOR TRACE ELEMENT ANALYSIS OF WATER AND WASTES	3200.7	0	9/11/85
INORGANIC AND METALS GLASSWARE AND PLASTICWARE WASHING	70-100	0	1994
INORGANIC REPORTING PROCEDURE - EPA CLP	4152	1	4/1/90
MERCURY IN SEDIMENT AND SOIL: EPA SOW 1990	4531	1	3/20/92
MERCURY IN WATER: EPA SOW 1990	4530	1	3/20/92
MERCURY IN DRINKING WATER, QUALITY ASSURANCE CRITERIA AND PROCEDURES	3200.2	1	5/12/92
MERCURY ON SILVER WOOL	4000	0	6/4/92
METALS ANALYSIS: GENERAL ATOMIC ABSORPTION TECHNIQUES	3200.0	0	10/4/85
METHOD OF STANDARD ADDITION	3027	1	4/23/92
WATER DIGESTION: FURNACE AA AND ICP - WATER	3025	1	10/5/84
WATER DIGESTION: FURNACE AA AND ICP FOR DRINKING WATER SAMPLES	3025.1	1	4/23/92

AENI LABORATORY
STANDARD OPERATING PROCEDURES
INDEX

TITLE	SOP NO.	REVISION	DATE
ORGANIC PREP			
ACID AND BASE-NEUTRAL ORGANIC ANALYSIS:SOIL AND WATER	3003	1	8/1/84
ALUMINA CHECK	1251	0	8/31/92
CHLORINATED HERBICIDES - EPA METHOD 8150	3815.0	0	7/23/86
CHLORINATED PHENOXY ACID HERBICIDES: STANDARD METHODS PROCEDURE	3509B	0	7/25/85
DETERMINATION OF NITROAROMATICS BY GAS CHROMATOGRAPHY (METHODS 609 AND 625)		3065	012/5/85
DETERMINATION OF SPECIFIC ORGANOCHLORIDE PESTICIDES BY GAS CHROMATOGRAPHY	4104	1	6/20/86
DETERMINATION OF SPECIFIC NITROGEN/PHOSPHORUS PESTICIDES	4108	0	6/20/86
DETERMINATION OF ORGANOCHLORINE PESTICIDES AND POLYCHLORINATED BIPHENYLS (PCBS) BY GC	3047	1	5/16/85
DETERMINATION OF SPECIFIC ORGANO-SULFUR PESTICIDES BY GAS CHROMATOGRAPHY	4107	0	6/20/86
GC/MS METHOD FOR SEMIVOLATILE ORGANICS: CAPILLARY COLUMN TECHNIQUE - EPA METHOD 8270 (SOLIDS)	3827.0	0	7/22/86
GC/MS METHOD FOR VOLATILE ORGANICS - EPA	3824.0	0	7/23/86
GLASSWARE WASHING - ORGANICS SECTION	30-001	0	1994
GREASE AND OIL IN WATER: FREON EXTRACTION	3015	1	10/1/89
HERBICIDES - EPA METHOD 515	3515.0	[in preparation]	
HPLC PHENOLS ORBO-17	4156	1	6/28/90
METHOD FOR THE DETERMINATION OF PESTICIDES AND PCBS IN WATER AND SOIL: EPA SOW 3/90 WITH REVISIONS	4505.390	1	5/6/92
METHOD FOR THE DETERMINATION OF EXTRACTABLE BASE/NEUTRALS AND ACID (SEMI-VOLATILES) ORGANIC COMPOUNDS IN WATER AND SOIL: EPA SOW 3/90 WITH REVISIONS	4507.390	1	3/32/92
MOISTURE: SOIL	3019	1	7/6/84
OIL AND GREASE IN WATERS, SOILS, SLUDGES	3015.1	[in preparation]	
ORGANIC SAMPLE PREPARATION	3030	0	4/28/89
ORGANIC SAMPLE QUALIFYING PROCEDURE - EPA CLP	4512	0	1/30/89
ORGANOCHLORINE PESTICIDES AND PCBS - METHOD 608	3608	1	9/28/92
ORGANOCHLORINE PESTICIDES AND PCBS - EPA METHOD 8080	3808.0	1	9/28/92
ORGANOCHLORINE PESTICIDES - STANDARD METHODS PROCEDURE 3509A	3509A	0	7/22/86
ORGANOCHLORINE PESTICIDES - EPA METHOD 508	3508.0	1	7/27/92

AEM LABORATORY
STANDARD OPERATING PROCEDURES
INDEX

TITLE	SOP NO.	REVISION	DATE
ORGANIC PREP, cont.			
ORGANOPHOSPHORUS PESTICIDES - EPA METHOD 8140 (SOLIDS)	3814.0	0	7/22/86
PCB PERSONNEL MONITOR	4157		
PCB PERSONNEL MONITOR-NIOSH	4159		
PCB'S IN PUF's	4158	0	1/8/90
PCB'S	4160		
PCT IN WATER: CLP-TYPE FORMAT	4516	1	6/22/90
PCT IN SOILS: CLP-TYPE FORMAT	4515	0	6/22/90
PERCENT (%) SOLIDS	3024	1	11/3/87
PETROLEUM HYDROCARBONS ANALYSIS: TISSUE, WATER, SOIL AND SEDIMENT	3048	2	6/10/92
PHENOLS BY HPLC	3700.0	[in revision]	
POLYNUCLEAR AROMATIC HYDROCARBONS (METHOD 610)	3008	1	2/2/85
PREPARATION OF ORGANOSULFUR COMPOUNDS IN WATER PRIOR TO ANALYSIS USING GC (USATHAMA)	30-200	0	1994
PREPARATION FAA ORGANOSULFUR COMPOUNDS IN SOIL PRIOR TO ANALYSIS USING GC (USATHAMA)	30-201	0	1994
QUALITY CONTROL FOR GC/MS METHODS	4154	0	8/25/89
FM DETERMINATION FOR SELECTED SEMIVOLATILES IN SOIL	4102	1	10/2/85
SEPARATORY FUNNEL AND LIQUID-LIQUID EXTRACTION: SW846 3510	3351.0	0	8/7/86
SOLVENT PURITY	1250	0	8/31/92
SONICATION EXTRACTION: SW846 3550	3355.0	0	7/22/86
SOW 2/88 SCREENING FOR PCB's	4161		
SOXHLET EXTRACTION METHOD	3028	0	12/12/8
TOTAL PETROLEUM HYDROCARBONS: IR (METHOD 418.1)	3066	0	8/31/92
TOTAL PETROLEUM HYDROCARBONS: GAS CHROMATOGRAPHY (METHOD 8015-M, DIESEL FRACTION)	3067	0	5/22/92
TRACEABILITY OF ORGANIC STANDARDS	3011	1	1/9/87

AENI LABORATORY
STANDARD OPERATING PROCEDURES
INDEX

TITLE	SOP NO.	REVISION	DATE
GC METHODS, HPLC METHODS AND PETROLEUM HYDROCARBON METHODS			
CALIBRATION CURVE INTERPRETATION	3029	0	10/10/87
CHLORINATED HERBICIDES - EPA METHOD 8150	3815.0	0	7/23/86
CHLORINATED PHENOXY ACID HERBICIDES: STANDARD METHODS PROCEDURE	3509B	0	7/25/85
DETERMINATION OF NITROAROMATICS BY GAS CHROMATOGRAPHY (METHODS 609 AND 625)	3065	0	12/5/85
DETERMINATION OF SPECIFIC ORGANOCHLORIDE PESTICIDES BY GAS CHROMATOGRAPHY	4104	1	6/20/86
DETERMINATION OF ORGANOCHLORINE PESTICIDES AND POLYCHLORINATED BIPHENYLS (PCBS) BY GC	3047	1	5/16/85
DETERMINATION OF SPECIFIC ORGANO-SULFUR PESTICIDES BY GAS CHROMATOGRAPHY	4107	0	6/20/86
DETERMINATION OF SPECIFIC NITROGEN/PHOSPHORUS	4108	0	6/20/86
GAS CHROMATOGRAPH: HEWLETT PACKARD 5890A	2201	0	4/28-85
HALOGENATED VOLATILE ORGANICS	3801.0	0	11/17/86
HERBICIDES - EPA METHOD 515	3515.0	[in preparation]	
HPLC PHENOLS ORBO-17	4156	1	6/28/90
INTEGRATOR-HEWLETT PACKARD 33904	2901	4	8/1/84
METHOD FOR DETERMINATION OF PURGEABLE (VOLATILE) HALOCARBONS IN WATER, SOIL AND AIR (METHOD 8010 RMA)	4105	1	6/19/86
METHOD FOR THE DETERMINATION OF PESTICIDES AND PCBS IN WATER AND SOIL: EPA SOW 3/90 WITH REVISIONS	4505.390	1	5/6/92
METHOD FOR DETERMINATION OF PURGEABLE (VOLATILE) AROMATICS IN WATER, SOIL AND AIR (METHOD 8020 RMA)	4106	1	6/20/86
ORGANIC REPORTING PROCEDURE - EPA CLP	4153	0	8/29/89
ORGANIC SAMPLE QUALIFYING PROCEDURE - EPA CLP	4512	0	1/30/89
ORGANIC BLANK EVALUATION PROCEDURE - EPA CLP	4513	0	1/30/89
ORGANOCHLORINE PESTICIDES AND PCBS - METHOD 608	3608	1	9/28/92
ORGANOCHLORINE PESTICIDES AND PCBS - EPA METHOD 8080	3808.0	1	9/28/92
ORGANOCHLORINE PESTICIDES - STANDARD METHODS PROCEDURE 3509A	3509A	0	7/22/86
ORGANOCHLORINE PESTICIDES - EPA METHOD 508	3508.0	1	7/27/92
ORGANOPHOSPHORUS PESTICIDES - EPA METHOD 8140 (SOLIDS)	3814.0	0	7/22/86
PCB PERSONNEL MONITOR	4157		

AENI LABORATORY
STANDARD OPERATING PROCEDURES
INDEX

TITLE	SOP NO.	REVISION	DATE
GC METHODS, HPLC METHODS AND PETROLEUM HYDROCARBON METHODS, cont.			
PCB PERSONNEL MONITOR-NIOSH	4159		
PCB'S IN PUF's	4158	0	1/8/90
PCB'S	4160		
PCT IN SOILS: CLP-TYPE FORMAT	4515	0	6/22/90
PCT IN WATER: CLP-TYPE FORMAT	4516	1	6/22/90
PETROLEUM HYDROCARBONS ANALYSIS: TISSUE, WATER, SOIL AND SEDIMENT	3048	2	6/10/92
PHENOLS BY HPLC	3700.0	[in revision]	
POLYNUCLEAR AROMATIC HYDROCARBONS (METHOD 610)	3008	1	2/2/85
PREPARATION AND LOGGING OF ANALYTICAL STANDARDS FOR GC AND GC/MS	1406	0	2/6/86
PURGE AND TRAP METHOD (METHOD 5030, SW846)	3503.0	0	11/19/86
PURGE AND TRAP METHOD (METHOD 5030, SW846)	3503.0	0	11/19/86
PURGEABLE AROMATICS (METHOD 602)	3009	1	2/2/85
SOIL GAS VOC'S IN CHARCOAL MEDIUM	4109		
SOW 2/88 SCREENING FOR PCB's	4161		
TOTAL PETROLEUM HYDROCARBONS: IR (METHOD 418.1)	3066	0	8/31/92
TOTAL PETROLEUM HYDROCARBONS: GAS CHROMATOGRAPHY (METHOD 8015-M, DIESEL FRACTION)	3067	0	5/22/92
TPH-GC, GASOLINE FRACTION (METHOD 8015-M)	3800	0	5/19/92
TRACEABILITY OF ORGANIC STANDARDS	3011	0	11/9/87
VOC's IN AMBIENT AIR	4167	0	6/91
VOC's-CHARCOAL TUBES	4165		

AENI LABORATORY
STANDARD OPERATING PROCEDURES
INDEX

TITLE	SOP NO.	REVISION	DATE
GS/MS METHODOLOGY			
ACID AND BASE-NEUTRAL ORGANIC ANALYSIS: SOIL AND WATER	3003	1	8/1/84
BASE/NEUTRALS AND ACIDS EPA METHOD 625	3625	1	1/21/93
GC/MS METHOD FOR SEMIVOLATILE ORGANICS: CAPILLARY COLUMN TECHNIQUE - EPA METHOD 8270 (SOLIDS)	3827.0	0	7/22/86
GC/MS METHOD FOR VOLATILE ORGANICS - EPA METHOD 8240	3824.0	0	7/23/86
METHOD FOR THE DETERMINATION OF EXTRACTABLE BASE/NEUTRALS AND ACID (SEMI-VOLATILES) ORGANIC COMPOUNDS IN WATER AND SOIL:EPA SOW 3/90 WITH REVISIONS	4507.390	1	3/32/92
METHOD FOR THE DETERMINATION OF PURGEABLE (VOLATILE) ORGANIC COMPOUNDS IN SOIL AND SEDIMENT: EPA SOW 3/90 WITH REVISIONS	4503.390	1	2/18/92
METHOD FOR THE DETERMINATION OF PURGEABLE (VOLATILE) ORGANIC COMPOUNDS IN WATER: EPA SOW 3/90 WITH REVISIONS	4502.390	1	2/18/92
ORGANIC REPORTING PROCEDURE - EPA CLP	4153	0	8/29/89
ORGANIC BLANK EVALUATION PROCEDURE - EPA CLP	4513	0	1/30/89
ORGANIC SAMPLE QUALIFYING PROCEDURE - EPA CLP	4512	0	1/30/89
PREPARATION AND LOGGING OF ANALYTICAL STANDARDS FOR GC AND GC/MS	1406	0	2/6/86
PURGE AND TRAP METHOD (METHOD 5030, SW846)	3503.077	0	11/19/86
PURGEABLE - EPA METHOD 624	3624	1	1/21/93
PURGEABLES	3004	1	5/23/84
QUALITY CONTROL FOR GC/MS METHODS	4154	0	8/25/89
SEMIQUANTITATIVE DETERMINATION FOR SELECTED SEMIVOLATILES IN SOIL	4102	1	10/2/85
VOLATILE ACIDS: SLUDGE	3021	1	7/3/84

APPENDIX E

HOLDING TIMES, PRESERVATION, AND CONTAINERS

HOLDING TIMES, PRESERVATION, AND CONTAINERS

Holding Times, Containers, and Preservation Requirements

Parameter	Matrix	Method(s)	Minimum Volume Required	Container	Preservative	Holding Time
pH	W	SW9040	25mL	P;G	None	analyze immediately in field
	S	SW9045				
Temperature	W	EPA170.1	1000mL	P;G	None	analyze immediately in field
Specific Conductivity	W	SW9050	100mL	P;G	Cool, 4°C	28 days
Common Anions (Cl, SO_4, NO_3)	W	EPA300	500mL	P;G	Cool, 4°C	28 days
Ignitability	W;S	SW1010	500mL;500g	G	Cool, 4°C	
Corrosivity	W;S	SW1110	500mL;500g	G	Cool, 4°C	
Reactivity	W;S	SW1846	1000mL;500g	P	Cool, 4°C	see CN-holding time
Toxicity-TCLP extraction procedure	W;S	SW1310 SW1311	1000mL per test; 1Kg	G G	Cool, 4°C Cool, 4°C	*see following table on TCLP extraction holding times
Soil Moisture Content	S	ASTM D2216	200 g	P;G	Airtight container cool, 4°C	ASAP

Holding Times, Containers, and Preservation Requirements, Cont.

Parameter	Matrix	Method(s)	Minimum Volume Required	Container	Preservative	Holding Time
Cyanide	W S	SW9010 SW9010	500mL 500g	P;G P;G	Cool to 4°C NaOH to pH > 12	14 days 14 days
Phenols	W S	SW9067		G only	Cool to 4°C H_2SO_4 to pH < 2	28 days
Mercury	W S	SW7470 SW7471	1000mL 200g	P;G P;G	HNO_3 to pH < 2	28 days 13 days (plastic)
ICP Metals	W,S	SW6010 digestion: various SW846 methods	1000mL 200g; 1000mL	P;G P;G	W-HNO^3 to pH < 2	6 months
ICP Metals (dissolved)	W	SW6010 digestion; various SW846 methods	1000 mL	P;G	Field filter; HNO_3 to pH < 2	6 months
Furnace AA (Ag, As, Cr, Pb, Sb, Se, Tl)	W,S	Various SW846	1000 mL 200 g	P;G	W-HNO_3 to pH < 2	6 months
Furnace (dissolved)	W	Various SW846 methods	1000 mL	P;G	Field filter, HNO_3 to pH < 2	6 months

Holding Times, Containers, and Preservation Requirements, Cont.

Parameter	Matrix	Method(s)	Minimum Volume Required	Container	Preservative	Holding Time
GC Methods:*						
Volatiles, halogenated	W	SW3510 or 3520/8010/8015	80mL	G	Teflon[R] septa, VOA vials; No headspace; 4 drops concentrated HCl/40 mLs; cool to 4°C	14 days
	S	SW3550/8010/8015 8080	80mL		Teflon[R] septa, VOA vials; No headspace; cool to 4°C14 days	14 days
					14 days	
Volatiles Aromatic	W	SW3510 or 3520/802	80mL	G	4Teflon[R] septa, VOA vials, No headspace; 4 drops concentrated HCl/40 mLs; cool to 4°C	(7 days if not preserved)
	S	SW3550/8020	80g		Teflon[R] septa, VOA vials, No headspace; cool to 4°C	14 days
Herbicides	W	SW3510 or 3520/8150	1000mL	G	Teflon[R] cap; cool to 4°C	7 days
	S	SW3510/8150	200g	G	cool to 4°C	

Holding Times, Containers, and Preservation Requirements, Cont.

Parameter	Matrix	Method(s)	Minimum Volume Required	Container	Preservative	Holding Time
Pesticide/PCB's	W	SW3510 or 350/ 8088	1000mL	G	Teflon septa; cool to 4°C	7 days
	S	SW3550/8080	200g	G		14 days
GC/MS Methods: (extracted as above)						
Volatiles	S,W	SW8240, 8260	80mL	G	Teflon septa; VOA vials; no headspace; 4 drops concentrated HCl to pH<2; cool to 4°C	14 days
Semivolatiles	S,W	SW8250, 8270	1000mL	G	Teflon septa; 0.008% $Na_2S_2O_3$; cool to 4°C	W=7 days S=14 days

APPENDIX B
OHM STANDARD OPERATING PROCEDURES

OHM Corporation

QUALITY POLICY AND POCEDURE APPROVAL AND REVISION RECORD

Document #	Title:
QP-618	Bailers

APPROVAL

Name	Title	Signature	Date
Willis Moody	Super. QA/QC		12/17/93
G. J. Herzig	Mngr. Field Tech.		12/17/93
Terry Sole	Dir. Tech. Svcs.		12/17/93

REVISION RECORD

Ltr.	Date	Change Description	Initials						
1		issue	-	-	-	-	-	-	-
2									
3									
4									
5									
6									
7									
8									
9									
10									
11									
12									
13									
14									
15									

OHM Corporation

Title: Bailers	Document #: QP-618	
Date Issued: 17 January, 1994	Rev: 0	Date: 17 December 1993

1.0 PURPOSE

To provide general information and procedures for the bailer sampling device.

2.0 SCOPE

The bailer is designed for obtaining liquid samples. The bailer can be constructed of PVC, Teflon, stainless steel or a combination of these materials. Disposable bailers intended for one time use only are usually made from polyethylene plastic or Teflon.

3.0 RELATED DOCUMENTS

OHM Field Sampling Manual

4.0 GENERAL INFORMATION

4.1 The bailer is one of the oldest and simplest methods available. It consists of a container attached to a cable which is lowered into a well to retrieve a sample. Bailers can be of various designs. The simplest is a weighted bottle or basally capped length of pipe which fills from the top as it is lowered into the well. Top filling bailers are acceptable for well purging but not for sampling. More sophisticated bailers have a check valve located at the base which allows water to enter from the bottom as it is lowered into the well. When the bailer is lifted, the check valve closes, allowing water in the bailer to be brought to the surface. More sophisticated bailers are available that remain open at both ends while lowered into the well, but can be sealed at both top and bottom by activating a triggering mechanism from the surface. This allows for more reliable sampling at discrete depths within a well. Perhaps the best known bailer of this design is the Kemmerer sampler.

4.2 Bailers generally provide an excellent means for collecting samples from monitoring wells. They can be constructed from a wide variety of materials compatible with the parameter of interest. Only Teflon and stainless steel bailers are acceptable for all parameters. Since they are relatively inexpensive, bailers can be easily dedicated to

an individual well to minimize cross contamination during sampling. If not dedicated to a well, they can be easily cleaned to prevent cross contamination. Nylon sample string is commonly used to raise and lower bailers. Monofilament line (fishing line), however, is more acceptable.

5.0 DEFINITIONS

5.1 Representativeness - The sample should possess the same qualities or properties (which are relevant to the investigation) as the whole of the material under investigation.

5.2 Grab Sample - A single sample representative of a specific location at a given point in time.

5.3 Composite Sample - Combination of more than one sample collected at various sampling locations and/or different points in time.

5.4 Equipment (field) Blanks - Samples used to verify cleanliness of the sampling equipment. The piece of equipment in question is used to take a sample of distilled or deionized water. One per analyte per piece of equipment per day is recommended.

5.5 Cross Contamination -- The introduction of contaminants into the sample through the sampling and/or sample-handling procedures which can cause an otherwise representative sample to become nonrepresentative.

6.0 RESPONSIBILITIES

The Sample Technician is responsible for all sample collection, documentation, and decontamination.

7.0 PROCEDURE

7.1 Assemble the decontaminated bailer (if necessary).

7.2 Securely attach sample string to the hole in the top of the bailer.

7.3 Slowly lower the bailer into the liquid to be sampled. Care should be taken not to drop the bailer into the structure being sampled.

7.4 Allow the bailer to fill with the liquid being sampled. Usually, a gurgling sound will be apparent when the bailer is filling.

7.5 When the bailer is full, remove it from the structure being sampled by pulling the string.

7.6 Position the hole on the bottom of the bailer over the appropriate sample container and push up on the Teflon ball to release the material. Alternatively the sample material can be poured from the top of the bailer into a sample container if the bailer design is an open top type.

7.7 After each use, the bailer must be decontaminated before using it again at a different sampling point. Check with the Project Chemist or the Site Supervisor for information on the correct decontamination procedures to use for the site where sampling was done.

8.0 EQUIPMENT

The materials required to perform soil sampling may include the following.

- Bailer
- Sample string or Nylon monofilament line
- Appropriate decontamination supplies

9.0 ATTACHMENTS

Figure 9-1 Teflon Bailer

OHM Corporation

QUALITY POLICY AND POCEDURE APPROVAL AND REVISION RECORD

Document #	Title:
QP-638	Tap Sampling

APPROVAL

Name	Title	Signature	Date
R. Steven Shirley	QC Officer		5/30/95
Guy Gallello, Jr.	Mgr. Field Tech.		5/30/95
Thomas E. Gran	Dir. Tech. Svcs.		5/30/95

REVISION RECORD

Ltr.	Date	Change Description	Initials						
1		issue	-	-	-	-	-	-	-
2									
3									
4									
5									
6									
7									
8									
9									
10									
11									
12									
13									
14									
15									

OHM Corporation

Title: Tap Sampling	Document #: QP-638	
Date Issued: May 30, 1995	Rev: 0	Date: May 30, 1995

1.0 PURPOSE

1.1 To comply with local, state, federal, and customer requirements.
1.2 To establish procedures for sampling from a tap.
1.3 To ensure the data generated from the sample is legally defensible.
1.4 To establish function-specific responsibilities for tap sampling.

2.0 SCOPE

2.1 This procedure includes general methods on how to take samples of liquid streams in such a way that the samples are representative of the liquid stream and that the sampling process does not interfere with any operations taking place in the stream.

2.2 This procedure identifies the required equipment utilized to obtain valid, representative samples from a tap including, but not limited to:

2.2.1 Residential water supply taps

2.2.2 Process line taps

2.2.3 Taps installed on water treatment equipment (e.g. sand filters, between carbon filters)

2.3 Field analyses and in-the-field preservation and handling techniques.

2.4 Information contained in this standard does not necessarily address all of the safety problems that can be associated with the methods described in this procedure. Site specific health and safety plans and site specific work plans will need to be read and understood prior to implementing the methods found in this procedure.

3.0 RELATED DOCUMENTS

3.1 Site Specific Sampling and Analysis Plan.

3.2 Site Specific Quality Assurance Plan.

3.3 OHM Corporation, Field Sampling Manual, 1993.

3.4 U.S. EPA 1980d. Samplers and Sampling Procedures for Hazardous Waste Streams. EPA-600/2-80-018, Municipal Environmental Research Laboratory, Cincinnati, OH.

3.5 U.S. EPA 1982a. Handbook for Sampling and Sample Preservation of Water and Wastewater. EPA-600/4-82-029, Environmental Monitoring and Support Laboratory, Cincinnati, OH

3.6 U.S. EPA 1982d. Test Methods for Evaluating Solid Waste: Physical/Chemical Methods. SW846, Third Edition, Office of Solid Waste and Emergency Response, Washington, DC.

3.7 ASTM, Annual Book of ASTM Standards, Section 11. Volume 11.04, F 301-91

4.0 GENERAL INFORMATION

4.1 The sampler must take into consideration the physical condition of the stream to be sampled. Such considerations include but are not limited to:

4.1.1 Pressure - Liquids under high pressure may cause excessive splash hazard as well as breakage of the sample container.

4.1.2 Flow Rate - A high flow rate may cause difficulties in containing excess liquids as well as handling of the sample container.

4.1.3 Temperature - Elevated temperature may require additional personal protective equipment and will create a vacuum or pressurize the sample container.

4.1.4 Vapor Pressure - Liquid with a high vapor pressure may cause the sample containers to pressurize or break violently.

4.2 Sampling Valves - Valves shall be designed to provide a relatively straight-through passageway for the liquid when opened. The sampling valves should be located approximately 12 pipe diameters from the device being sampled.

4.3 If large valves with a high flow rate are to be sampled, an extension tube may be used to remove a sample of the liquid from the stream (see Figure 4.1)

4.4 Applicable preservatives, except for acid preservatives (in the case of samples collected for total dissolved metals analysis), must be added to the sample containers before sampling.

4.5 All sampling equipment must be decontaminated prior to usage.

4.6 Sample containers must be precleaned.

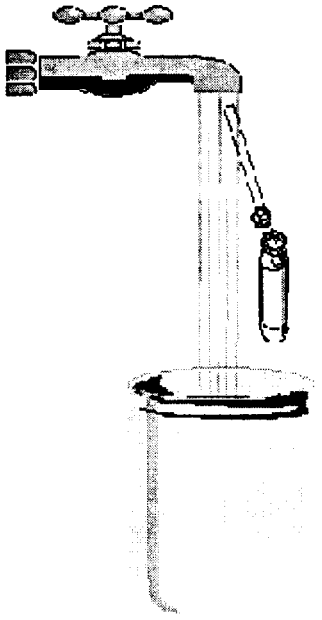

5.0 DEFINITIONS

5.1 Composite Sample - A sample consisting of two or more samples that have been combined.

5.2 Conductivity - The reciprocal (inverse) of the resistance in ohms measured between the opposite faces of a 1 centimeter cube of an aqueous solution at a specified temperature.

5.3 Contractor Laboratory - The laboratory performing analysis of the field samples.

5.4 Dissolved Solids - That matter, exclusive of gasses, which is dispersed in the water to give a single homogenous liquid phase.

5.5 Environmental Sample - Sample of a naturally occurring material such as soil, gravel, or rock; water from groundwater, a stream, or pond; or ambient air or absorbent tubes used in the collection of contaminates from air which may have low levels of chemical contamination, but do not take on the hazardous characteristics of the chemical contaminant as defined by 49 CFR 171.8, 49 CFR 172.101, or 49 CFR Part 173 or 173.2a

5.6 Equipment Blank - Samples consisting of reagent water or solvents collected from a final rinse of sampling equipment after the decontamination procedure has been performed. The purpose of rinsate blanks is to determine whether the sampling equipment is causing cross contamination of the samples.

5.7 pH - The negative logarithm value of the hydrogen ion activity in an aqueous solution.

5.8 Quality Assurance (QA) Samples - Samples sent to an approved QA laboratory by overnight delivery and analyzed to evaluate OHM and/or subcontractor laboratory performance. OHM will coordinate with the designated QA laboratory not less than 48 hours before sampling to assure that the QA laboratory is alerted to receive the QA samples and process them within the time limits specified by applicable USEPA methods and guidelines.

5.9 Quality Control (QC) Samples - Samples analyzed for the purpose of assessing the quality of the sampling effort and of the analytical data. QC samples include replicates of field samples, equipment blanks, and field blanks. QC samples are collected by the sampling team for use by OHM's on-site laboratory or subcontracted laboratory. The purpose of the samples is to provide site specific field originated checks that the data generated by OHM's analytical lab are of suitable quality. QC samples will represent approximately 10 percent of the field samples.

5.10 Replicate Samples - Multiple grab samples, collected separately, that are equally representative of a medium at a given time and location.

5.11 Split Samples - Samples that are collected as a single sample, homogenized, divided into two or more equal parts, and placed into separate containers. The sample will be split in the field prior to delivery to a laboratory. Ordinarily, split samples are analyzed by two different laboratories.

5.12 Trip Blank - Containers of organic-free reagent water that are kept with the field sample containers from the time they leave the laboratory until the time they are returned to the laboratory. The purpose of trip blanks is to determine whether samples are being contaminated during transit or sample collection. Trip blanks pertain only to volatile organic analyses; therefore, the containers must contain no headspace. Only one trip blank is needed for one day's sampling and will satisfy trip blank requirements for all matrices for that day if the volatile samples are shipped in the same cooler.

5.13 Turbidity - The reduction in transparency of a sample due to the presence of particulate matter.

6.0 RESPONSIBILITIES

6.1 The sample technologist will be responsible for:

6.1.1 Carrying out all sampling in accordance to approved procedures and methodologies as defined in the Chemical Sampling and Analysis Plan (CSAP).

6.1.2 Generating trip blanks, equipment blanks, and replicate samples as required by the CSAP, Quality Assurance Project Plan (QAPP), or this

SOP.

6.1.3 Recording all field data in logbooks.

6.1.4 Filling out chain-of-custody (COC) forms

6.1.5 Packaging and shipping of samples.

7.0 PROCEDURE

7.1 Decontaminate or wash all sampling equipment in accordance with the procedures identified in the site specific Sampling and Analysis Plan.

7.2 Label the sample containers to indicate the project name, project number, the sample number, sample port location, date, time, analysis to be performed, the preservatives, and samplers.

7.3 If a process system is to be sampled, it is imperative that adequate time be given for the system to stabilize. A suggested stabilization time period is three times the ratio of the system volume to system flow rate.

7.4 Remove the protective cover from the sampling valve and wash or decontaminate the sample valve outlet.

7.5 Add the applicable preservative to the sample container. If the applicable preservative is an acid, add the preservative to the sample container after the sample has been taken.

7.6 Position a container of adequate size under the sampling valve to collect the excess liquid stream.

7.7 Turn on the sampling valve and allow the system liquid to purge the sampling port and valve before collecting the sample. (A minimum of 300 ml should be purged before the sample is collected.)

7.8 Under no circumstances should the sample valve be adjusted during the collection of the sample. (Adjustment of the sample valve may lead to bias in such analytes as total suspended solids (TSS) and oil and grease (O&G)).

7.9 The entire liquid stream should be collected in the sample container whenever possible.

7.10 If the flow rate is too high to collect the entire liquid stream and an extension tube is to be used to collect the sample, the following procedures must be followed:

7.10.1 Place the extension tube as illustrated in Figure 4.1 in the liquid stream. Allow the liquid to purge the extension tube with at least three times the volume of the extension tube.

7.10.2 Collect the sample in the proper sampling container.

7.11 The sampler designated to perform tap sampling should keep up-to-date field records which document the following:

7.11.1 Identification of the sampling location.

7.11.2 Description of the process being sampled.

7.11.3 Sample identification numbers.

7.11.4 Tap purging procedures and time.

7.11.5 Sample collection procedures and equipment used.

7.11.6 Date and time of collection.

7.11.7 Types of sample containers utilized.

7.11.8 Preservative(s) used.

7.11.9 Parameters requested for analysis.

7.11.10 Field analysis data and method(s).

7.11.11 Distribution and transportation information for samples.

7.11.12 Field observations on sampling event.

7.11.13 Name of collector.

7.11.14 Number of containers per tap.

7.12 After collection, samples should be handled as little as possible. It is preferable to use self-contained "chemical" ice (e.g., "blue ice") to reduce the risk of contamination. If natural ice is used, it should be bagged and steps taken to ensure that the melted ice does not cause sample containers to be submerged and thus increase the possibility of cross-contamination. All sample containers should be enclosed in plastic bags or cans to prevent cross-contamination. Samples should be secured in the ice chest to prevent movement of sample containers and possible breakage.

8.0 EQUIPMENT

- Sample containers (40 ml VOA, 8oz, 16oz, or 32oz precleaned with Teflon lined lid)

- Coolers for sample shipping and cooling (Rubbermaid or Coleman 48 to 54 quart size)
- Chemical preservatives (See SOP QP-611 for Sample Preservation and Holding Times)
- Appropriate packing cartons, cans, and filler material
- Labels
- COC documents
- Thermocouple thermometer, digital, Type K (Cole-Parmer G-08528-40 with G-93815-10 probe)
- Paper towels
- Latex or nitrile sampling gloves
- Field sampling logbooks
- Plastic trash bags, 30 gallon size
- Indelible marking pens
- Pen: black, permanent ink
- Pails: plastic, graduated, 3-5 gals. Capacity
- Decontamination solutions: distilled or deionized water that is analyte free, Alconox or Liquinox, and pesticide free Isopropanol or Hexane

9.0 ATTACHMENTS

None

OHM Corporation

QUALITY POLICY AND POCEDURE APPROVAL AND REVISION RECORD

Document #	Title:
QP-638	Tap Sampling

APPROVAL

Name	Title	Signature	Date
R. Steven Shirley	QC Officer		5/30/95
Guy Gallello, Jr.	Mgr. Field Tech.		5/30/95
Thomas E. Gran	Dir. Tech. Svcs.		5/30/95

REVISION RECORD

Ltr.	Date	Change Description	Initials						
1		issue	-	-	-	-	-	-	-
2									
3									
4									
5									
6									
7									
8									
9									
10									
11									
12									
13									
14									
15									

OHM Corporation

Title: Tap Sampling	Document #: QP-638	
Date Issued: May 30, 1995	Rev: 0	Date: May 30, 1995

1.0 PURPOSE

1.1 To comply with local, state, federal, and customer requirements.
1.2 To establish procedures for sampling from a tap.
1.3 To ensure the data generated from the sample is legally defensible.
1.4 To establish function-specific responsibilities for tap sampling.

2.0 SCOPE

2.1 This procedure includes general methods on how to take samples of liquid streams in such a way that the samples are representative of the liquid stream and that the sampling process does not interfere with any operations taking place in the stream.

2.2 This procedure identifies the required equipment utilized to obtain valid, representative samples from a tap including, but not limited to:

2.2.1 Residential water supply taps

2.2.2 Process line taps

2.2.3 Taps installed on water treatment equipment (e.g. sand filters, between carbon filters)

2.3 Field analyses and in-the-field preservation and handling techniques.

2.4 Information contained in this standard does not necessarily address all of the safety problems that can be associated with the methods described in this procedure. Site specific health and safety plans and site specific work plans will need to be read and understood prior to implementing the methods found in this procedure.

3.0 RELATED DOCUMENTS

3.1 Site Specific Sampling and Analysis Plan.

3.2 Site Specific Quality Assurance Plan.

3.3 OHM Corporation, Field Sampling Manual, 1993.

3.4 U.S. EPA 1980d. Samplers and Sampling Procedures for Hazardous Waste Streams. EPA-600/2-80-018, Municipal Environmental Research Laboratory, Cincinnati, OH.

3.5 U.S. EPA 1982a. Handbook for Sampling and Sample Preservation of Water and Wastewater. EPA-600/4-82-029, Environmental Monitoring and Support Laboratory, Cincinnati, OH

3.6 U.S. EPA 1982d. Test Methods for Evaluating Solid Waste: Physical/Chemical Methods. SW846, Third Edition, Office of Solid Waste and Emergency Response, Washington, DC.

3.7 ASTM, Annual Book of ASTM Standards, Section 11. Volume 11.04, F 301-91

4.0 GENERAL INFORMATION

4.1 The sampler must take into consideration the physical condition of the stream to be sampled. Such considerations include but are not limited to:

4.1.1 Pressure - Liquids under high pressure may cause excessive splash hazard as well as breakage of the sample container.

4.1.2 Flow Rate - A high flow rate may cause difficulties in containing excess liquids as well as handling of the sample container.

4.1.3 Temperature - Elevated temperature may require additional personal protective equipment and will create a vacuum or pressurize the sample container.

4.1.4 Vapor Pressure - Liquid with a high vapor pressure may cause the sample containers to pressurize or break violently.

4.2 Sampling Valves - Valves shall be designed to provide a relatively straight-through passageway for the liquid when opened. The sampling valves should be located approximately 12 pipe diameters from the device being sampled.

4.3 If large valves with a high flow rate are to be sampled, an extension tube may be used to remove a sample of the liquid from the stream (see Figure 4.1)

4.4 Applicable preservatives, except for acid preservatives (in the case of samples collected for total dissolved metals analysis), must be added to the sample containers before sampling.

4.5 All sampling equipment must be decontaminated prior to usage.

4.6 Sample containers must be precleaned.

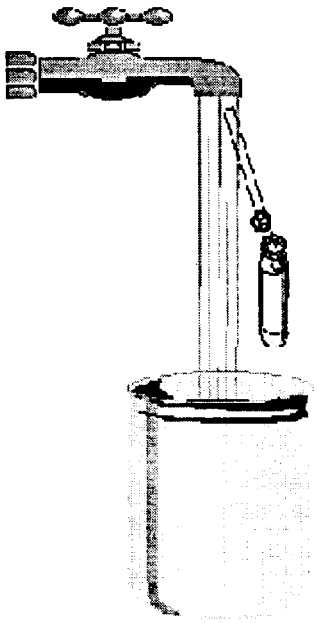

5.0 DEFINITIONS

5.1 Composite Sample - A sample consisting of two or more samples that have been combined.

5.2 Conductivity - The reciprocal (inverse) of the resistance in ohms measured between the opposite faces of a 1 centimeter cube of an aqueous solution at a specified temperature.

5.3 Contractor Laboratory - The laboratory performing analysis of the field samples.

5.4 Dissolved Solids - That matter, exclusive of gasses, which is dispersed in the water to give a single homogenous liquid phase.

5.5 Environmental Sample - Sample of a naturally occurring material such as soil, gravel, or rock; water from groundwater, a stream, or pond; or ambient air or absorbent tubes used in the collection of contaminates from air which may have low levels of chemical contamination, but do not take on the hazardous characteristics of the chemical contaminant as defined by 49 CFR 171.8, 49 CFR 172.101, or 49 CFR Part 173 or 173.2a

5.6 Equipment Blank - Samples consisting of reagent water or solvents collected from a final rinse of sampling equipment after the decontamination procedure has been performed. The purpose of rinsate blanks is to determine whether the sampling equipment is causing cross contamination of the samples.

5.7 pH - The negative logarithm value of the hydrogen ion activity in an aqueous solution.

5.8 Quality Assurance (QA) Samples - Samples sent to an approved QA laboratory by overnight delivery and analyzed to evaluate OHM and/or subcontractor laboratory performance. OHM will coordinate with the designated QA laboratory not less than 48 hours before sampling to assure that the QA laboratory is alerted to receive the QA samples and process them within the time limits specified by applicable USEPA methods and guidelines.

5.9 Quality Control (QC) Samples - Samples analyzed for the purpose of assessing the quality of the sampling effort and of the analytical data. QC samples include replicates of field samples, equipment blanks, and field blanks. QC samples are collected by the sampling team for use by OHM's on-site laboratory or subcontracted laboratory. The purpose of the samples is to provide site specific field originated checks that the data generated by OHM's analytical lab are of suitable quality. QC samples will represent approximately 10 percent of the field samples.

5.10 Replicate Samples - Multiple grab samples, collected separately, that are equally representative of a medium at a given time and location.

5.11 Split Samples - Samples that are collected as a single sample, homogenized, divided into two or more equal parts, and placed into separate containers. The sample will be split in the field prior to delivery to a laboratory. Ordinarily, split samples are analyzed by two different laboratories.

5.12 Trip Blank - Containers of organic-free reagent water that are kept with the field sample containers from the time they leave the laboratory until the time they are returned to the laboratory. The purpose of trip blanks is to determine whether samples are being contaminated during transit or sample collection. Trip blanks pertain only to volatile organic analyses; therefore, the containers must contain no headspace. Only one trip blank is needed for one day's sampling and will satisfy trip blank requirements for all matrices for that day if the volatile samples are shipped in the same cooler.

5.13 Turbidity - The reduction in transparency of a sample due to the presence of particulate matter.

6.0 RESPONSIBILITIES

6.1 The sample technologist will be responsible for:

6.1.1 Carrying out all sampling in accordance to approved procedures and methodologies as defined in the Chemical Sampling and Analysis Plan (CSAP).

6.1.2 Generating trip blanks, equipment blanks, and replicate samples as

required by the CSAP, Quality Assurance Project Plan (QAPP), or this SOP.

6.1.3 Recording all field data in logbooks.

6.1.4 Filling out chain-of-custody (COC) forms

6.1.5 Packaging and shipping of samples.

7.0 PROCEDURE

7.1 Decontaminate or wash all sampling equipment in accordance with the procedures identified in the site specific Sampling and Analysis Plan.

7.2 Label the sample containers to indicate the project name, project number, the sample number, sample port location, date, time, analysis to be performed, the preservatives, and samplers.

7.3 If a process system is to be sampled, it is imperative that adequate time be given for the system to stabilize. A suggested stabilization time period is three times the ratio of the system volume to system flow rate.

7.4 Remove the protective cover from the sampling valve and wash or decontaminate the sample valve outlet.

7.5 Add the applicable preservative to the sample container. If the applicable preservative is an acid, add the preservative to the sample container after the sample has been taken.

7.6 Position a container of adequate size under the sampling valve to collect the excess liquid stream.

7.7 Turn on the sampling valve and allow the system liquid to purge the sampling port and valve before collecting the sample. (A minimum of 300 ml should be purged before the sample is collected.)

7.8 Under no circumstances should the sample valve be adjusted during the collection of the sample. (Adjustment of the sample valve may lead to bias in such analytes as total suspended solids (TSS) and oil and grease (O&G)).

7.9 The entire liquid stream should be collected in the sample container whenever possible.

7.10 If the flow rate is too high to collect the entire liquid stream and an extension tube is to be used to collect the sample, the following procedures must be followed:

7.10.1 Place the extension tube as illustrated in Figure 4.1 in the liquid stream. Allow the liquid to purge the extension tube with at least three times the

volume of the extension tube.

7.10.2 Collect the sample in the proper sampling container.

7.11 The sampler designated to perform tap sampling should keep up-to-date field records which document the following:

7.11.1 Identification of the sampling location.

7.11.2 Description of the process being sampled.

7.11.3 Sample identification numbers.

7.11.4 Tap purging procedures and time.

7.11.5 Sample collection procedures and equipment used.

7.11.6 Date and time of collection.

7.11.7 Types of sample containers utilized.

7.11.8 Preservative(s) used.

7.11.9 Parameters requested for analysis.

7.11.10 Field analysis data and method(s).

7.11.11 Distribution and transportation information for samples.

7.11.12 Field observations on sampling event.

7.11.13 Name of collector.

7.11.14 Number of containers per tap.

7.12 After collection, samples should be handled as little as possible. It is preferable to use self-contained "chemical" ice (e.g., "blue ice") to reduce the risk of contamination. If natural ice is used, it should be bagged and steps taken to ensure that the melted ice does not cause sample containers to be submerged and thus increase the possibility of cross-contamination. All sample containers should be enclosed in plastic bags or cans to prevent cross-contamination. Samples should be secured in the ice chest to prevent movement of sample containers and possible breakage.

8.0 EQUIPMENT

- Sample containers (40 ml VOA, 8oz, 16oz, or 32oz precleaned with Teflon lined lid)

- Coolers for sample shipping and cooling (Rubbermaid or Coleman 48 to 54 quart size)
- Chemical preservatives (See SOP QP-611 for Sample Preservation and Holding Times)
- Appropriate packing cartons, cans, and filler material
- Labels
- COC documents
- Thermocouple thermometer, digital, Type K (Cole-Parmer G-08528-40 with G-93815-10 probe)
- Paper towels
- Latex or nitrile sampling gloves
- Field sampling logbooks
- Plastic trash bags, 30 gallon size
- Indelible marking pens
- Pen: black, permanent ink
- Pails: plastic, graduated, 3-5 gals. Capacity
- Decontamination solutions: distilled or deionized water that is analyte free, Alconox or Liquinox, and pesticide free Isopropanol or Hexane

9.0 ATTACHMENTS

None

APPENDIX F
FINAL ENVIRONMENTAL PROTECTION PLAN

FINAL
ENVIRONMENTAL PROTECTION PLAN
FOR
GROUNDWATER REMEDIATION
Q-AREA DRUM STORAGE YARD
NAVAL BASE NORFOLK
NORFOLK, VIRGINIA

Prepared for:

DEPARTMENT OF THE NAVY
Contract No. N62470-93-D-3032
Delivery Order 073

Prepared by:

OHM Remediation Services Corp.
Trenton, New Jersey

Reviewed by:

Philip A. Tully, P.E
Senior Project Manager

John P. Franz, P.E.
Program Manager

September 24, 1997
OHM Project 17260EPP

OHM Remediation Services Corp.
A Subsidiary of OHM Corporation

TABLE OF CONTENTS

1.0 DEWATERING 1-1

2.0 SOIL STOCKPILING 1-1

3.0 FUEL STORAGE 1-1

4.0 EROSION AND SEDIMENT CONTROL 1-1

5.0 HAZARDOUS MATERIALS 1-2

ENVIRONMENTAL PROTECTION PLAN

1.0 DEWATERING

This plan addresses environmental protection measures to be implemented during the execution of the project. Construction activities include well-drilling, trench excavation, pipe installation, concrete pad construction and mechanical installation.

Dewatering during trench excavation or building foundation construction will occur as necessary. Collected water will be pumped with a trash pump and stored on-site in a Baker tank with a 10,000 - 20,000 gallon capacity, if necessary. Depending on the amount of water collected, OHM may apply for a discharge permit and treat the water on-site with a mobile treatment unit consisting of bag filters, air stripper and carbon. Otherwise, the water will be sampled and disposed. Development water will be handled in the same manner (i.e. stored on-site in the Baker tank).

2.0 SOIL STOCKPILING

Excess soil not used for backfilling will be staged in a lined and bermed stockpile area. The liner will extend over haybales and will be secured with sandbags to contain any moisture that may accumulate. The soil piles will also be covered with plastic sheeting. The soil will be sampled for disposal criteria and transported to an approved disposal facility as set up by the OHM transportation and disposal department or reused as backfill if analytically acceptable. Water collected in the stockpile area will be pumped to the Baker tank. Although the stockpiled soil will be covered, a portable water tank will be situated alongside the area to water down the soil to control dust. Drill cuttings will be stored separately in a roll-off container.

3.0 FUEL STORAGE

Diesel fuel will not be stored on site. OHM will arrange a delivery service to refuel equipment as needed.

4.0 EROSION AND SEDIMENT CONTROL

Erosion and sediment control measures to be implemented during the project include:

1. Staging excavated soils and drill cuttings in a stockpile area as described in Section 2.0. Staging materials alongside excavated areas will only be performed temporarily until the materials can be transported to the stockpile area, or used as backfill.

2. Providing drop inlet protection around existing drainage systems. OHM proposes placing a layer of filter fabric over each drop inlet and surrounding the drop inlet with haybales. The filter will be inspected daily and accumulated sediment will be removed. These measures will satisfactorily protect the drop inlets from sediment infiltration.

3. Although the topography is relatively flat in the unpaved sections of AOC-1, silt fence will be installed on the down gradient sides of soil stockpiles and excavations to control sediment migration.

5.0 HAZARDOUS MATERIALS

The specific Health and Safety Plan (HASP), (Appendix B) describes the procedures that will be in place throughout the duration of the project for dealing with hazardous materials.

APPENDIX G
FINAL TRANSPORTATION AND DISPOSAL PLAN

FINAL
TRANSPORTATION AND DISPOSAL PLAN
FOR
GROUNDWATER REMEDIATION
Q-AREA DRUM STORAGE YARD
NAVAL BASE NORFOLK
NORFOLK, VIRGINIA

Prepared for:

DEPARTMENT OF THE NAVY
Contract No. N62470-93-D-3032
Delivery Order 073

Prepared by:

OHM Remediation Services Corp.
Trenton, New Jersey

Reviewed by:

Thomas Joyner
Transportation and Disposal Coordinator

Philip A. Tully, P.E.
Senior Project Manager

John P. Franz, P.E.
Program Manager

OHM Remediation Services Corp.
A Subsidiary of OHM Corporation

September 24, 1997
OHM Project 17260TDP

TABLE OF CONTENTS

1.0 DESCRIPTION OF WASTES 1

2.0 WASTE CHARACTERIZATION 1

3.0 WASTE DISPOSAL 1

4.0 DISPOSAL FACILITY SELECTION 1

5.0 DISPOSAL ARRANGEMENTS 2

6.0 WASTE TRANSPORTATION 2

7.0 DOCUMENTATION AND SUBMITTALS 2

TRANSPORTATION AND DISPOSAL PLAN

1.0 DESCRIPTION OF WASTES

Trenching and drilling activities during this project will generate three waste streams, potentially contaminated with volatile organic compounds. Estimated volumes for the materials for off-site disposal are:

soil	trenching - 100 cubic yards drilling -35 cubic yards
water	decontamination - 500 gallons well development - 200 gallons
asphalt	excavation - 200 cubic yards

2.0 WASTE CHARACTERIZATION

Based on prior investigation at this site, various volatile organic compounds are known to be present. These include TCE, 1,1 DCE, 1,2 DCE, vinyl chloride. Since no F-listed or U-listed sources for these compounds have been identified on this site, waste classification will be determined by TCLP testing for characteristic wastes.

Until TCLP data indicate otherwise, all waste generated from this site is assumed to be non-RCRA hazardous.

3.0 WASTE DISPOSAL

3.1 Determination of Required Treatment Technology

Each waste type generated during this project will require a different disposal method. These include:

Waste Type	Possible Disposal Method
soil from trenching and drilling	recycle, bioremediation, landfill, onsite reuse
water from decontamination and well development	off-site or on-site wastewater treatment

4.0 DISPOSAL FACILITY SELECTION

OHM will select the final disposal facility for the two waste streams based on several factors:

- compliance with CERCLA Off-Site Policy (if RCRA hazardous)
- TSDF capacity to accommodate incoming waste
- solicitation of bids using applicable FAR's
- verification of permits and insurance (at time of award)

Potential disposal facilities for this work are:

soils/petroleum hydrocarbons	
recycling/bioremediation	Clean Earth, New Castle, DE SoilSafe, Baltimore, MD RECO Industries, Richmond, VA
landfill	WMX Waste Management., Glenns, VA BFI, Richmond, VA Chambers/USA Waste, Charles City, VA
waters	IPC, Wilmington, DE DuPont, Deepwater, NJ Clean Harbors, Baltimore, MD

5.0 DISPOSAL ARRANGEMENTS

The OHM Transportation and Disposal Coordinator will complete all necessary paperwork required for approval at the selected disposal facilities for all waste generated at this site. This paperwork includes, but is not limited to, waste profiles, analytical data, and generator certifications. These documents will be forwarded to the proper Navy personnel for review and signature.

6.0 WASTE TRANSPORTATION

6.1 Packaging Requirements

There are no packaging restrictions on the shipment of soils or waters from this project. All soils and debris will be shipped via semi-dump trailers and/or rolloff containers. Waters will be shipped via semi-trailer tanker.

6.2 Selection of Transporter

OHM will select waste transporters using applicable FAR's during the solicitation process. OHM will solicit bids from only those vendors who are permitted to haul each particular waste type. Verification of permits will take place at time of solicitation.

6.3 Required Shipping Papers

The OHM T & D Coordinator will complete all necessary paperwork required for shipment of waste off-site. These include bills of lading, non-hazardous waste manifests, and/or hazardous waste manifests and land disposal restriction (LDR) certifications. All disposal shipping documents will be provided to Navy for review and signature as generator.

7.0 DOCUMENTATION AND SUBMITTALS

Formal submittals to the Navy pertaining to waste transportation and disposal will consist of the following:

- waste profiles
- sample bill of lading and hazardous waste manifest and LDR certification

- weight tickets, TSD manifest copy, and certificate of disposal

The OHM project file will contain copies of:

- hazardous waste manifests
- LDR certifications
- certificates of disposal.

APPENDIX B
ENGINEERING CALCULATIONS AND CATALOG CUT SHEETS