M00263.AR.000886
MCRD PARRIS ISLAND
5090.3a

SAMPLING AND ANALYSIS PLAN FOR SITE 27 EQUIPMENT PARADE DECK MOTOR-T SITE CHARACTERIZATION SAMPLING DRAFT ACTING AS FINAL MCRD PARRIS ISLAND SC

11/1/2010

TETRA TECH NUS

Comprehensive **L**ong-term **E**nvironmental **A**ction **N**avy

CONTRACT NUMBER N62467-04-D-0055

Rev. 1
11/10

Sampling and Analysis Plan
Site 27 - Equipment Parade Deck
Motor-T Site Characterization Sampling

for

Marine Corps Recruit Depot
Parris Island, South Carolina

Contract Task Order 0166

November 2010

U.S. EPA Identification Number SC6170022762

NAVFAC
Naval Facilities Engineering Command
NAVFAC SOUTHEAST

NAS Jacksonville
Jacksonville, Florida 32212-0030

TETRA TECH NUS, Inc.

SAP Worksheet #1 -- Title and Approval Page

(UFP-QAPP Manual Section 2.1)

SAMPLING AND ANALYSIS PLAN
SITE 27 - EQUIPMENT PARADE DECK
MOTOR-T SITE CHARACTERIZATION SAMPLING
MARINE CORPS RECRUIT DEPOT
PARRIS ISLAND, SOUTH CAROLINA

November 2010
Prepared for:
Naval Facilities Engineering Command
Southeast
NAS Jacksonville Building 103
Jacksonville, Florida 32212

Prepared by:
Tetra Tech NUS, Inc.
661 Andersen Drive
Foster Plaza 7
Pittsburgh, Pennsylvania 15220-2745

Prepared under:
Comprehensive Long-Term Environmental Action Navy
Contract No. N62467-04-D-0055
Contract Task Order 0166

Review Signatures: (SEE FOLLOWING PAGE)

Mark Sladic
Task Order Manager
Tetra Tech NUS, Inc.
12 nov 10

Kelly Carper
CLEAN SE Quality Assurance Manager
Tetra Tech NUS, Inc.
11/12/10

Approval Signatures:

Charles Cook
Navy Remedial Project Manager
NAVFAC SE

NAVFAC Quality Assurance Officer
NAVFAC LANT

Lila Llamas
Remedial Project Manager
USEPA – Region 4

Meredith Amick
Remedial Project Manager
SCDHEC

SAP Worksheet #1 – Title and Approval Page

(UFP-QAPP Manual Section 2.1)

SAMPLING AND ANALYSIS PLAN
SITE 27 - EQUIPMENT PARADE DECK
MOTOR-T SITE CHARACTERIZATION SAMPLING
MARINE CORPS RECRUIT DEPOT
PARRIS ISLAND, SOUTH CAROLINA

July 2010
Prepared for:
Naval Facilities Engineering Command
Southeast
NAS Jacksonville Building 103
Jacksonville, Florida 32212

Prepared by:
Tetra Tech NUS, Inc.
661 Andersen Drive
Foster Plaza 7
Pittsburgh, Pennsylvania 15220-2745

Prepared under:
Comprehensive Long-Term Environmental Action Navy
Contract No. N62467-04-D-0055
Contract Task Order 0166

Review Signatures:

Mark Stadic
Task Order Manager
Tetra Tech NUS, Inc.

Kelly Carper
CLEAN SE Quality Assurance Manager
Tetra Tech NUS, Inc.

Approval Signatures:

Charles Cook
Navy Remedial Project Manager
NAVFAC SE

NAVFAC Quality Assurance Officer
NAVFAC LANT

7/12/10

Lila Llamas
Remedial Project Manager
USEPA – Region 4

Meredith Amick
Remedial Project Manager
SCDHEC

TABLE OF CONTENTS

SAP Worksheets **Page**

SAP Worksheet #1 -- Title and Approval Page 1
SAP Worksheet #2 -- SAP Identifying Information 10
SAP Worksheet #3 -- Distribution List 14
SAP Worksheet #4 -- Project Personnel Sign-Off Sheet 15
SAP Worksheet #5 -- Project Organizational Chart 16
SAP Worksheet #6 -- Communication Pathways 17
SAP Worksheet #7 – Personnel Responsibilities and Qualification's Table 18
SAP Worksheet #8 -- Special Personnel Training Requirements Table 20
SAP Worksheet #9 -- Project Scoping Session Participants Sheet 21
SAP Worksheet #10: Conceptual Site Model 24
SAP Worksheet #11: Data Quality Objectives: Site 27 32
SAP Worksheet #12 -- Measurement Performance Criteria Table – All Matrices 37
SAP Worksheet #13 -- Secondary Data Criteria and Limitations Table 38
SAP Worksheet #14 -- Summary of Project Tasks 39
SAP Worksheet #15 -- Reference Limits and Evaluation Table 45
SAP Worksheet #16 -- Project Schedule/Timeline Table (optional format) 61
SAP Worksheet #17 -- Sampling Design and Rationale 62
SAP Worksheet #18 -- Sampling Locations and Methods/SOP Requirements Table 65
SAP Worksheet #19 – Analytical SOP Requirements Table 71
SAP Worksheet #20 -- Field Quality Control Sample Summary Table 74
SAP Worksheet #21 -- Project Sampling SOP References Table 76
SAP Worksheet #22 -- Field Equipment Calibration, Maintenance, Testing, and Inspection Table 78
SAP Worksheet #23 -- Analytical SOP References Table 79
SAP Worksheet #24 -- Analytical Instrument Calibration Table 82
SAP Worksheet #25 -- Analytical Instrument and Equipment Maintenance, Testing, and Inspection Table 87
SAP Worksheet #26 -- Sample Handling System 89
SAP Worksheet #27 – Sample Custody Requirements Table 90
SAP Worksheet #28 -- Laboratory QC Samples Table 92
SAP Worksheet #29 -- Project Documents and Records Table 102
SAP Worksheet #30 -- Analytical Services Table 103
SAP Worksheet #31 -- Planned Project Assessments Table 104
SAP Worksheet #32 -- Assessment Findings and Corrective Action Responses 105
SAP Worksheet #33 -- QA Management Reports Table 106
SAP Worksheet #34 -- Verification (Step I) Process Table 107
SAP Worksheet #35 -- Validation (Steps IIa and IIb) Process Table 109
SAP Worksheet #36 –Analytical Data Validation (Steps IIa and IIb) Summary Table 111
SAP Worksheet #37 -- Usability Assessment 112
REFERENCES 116

List of Tables

10-1 Water Level Measurements 2007
10-2 Water Level Measurements 2008

List of Figures

10-1 Depot and Site Location Map
10-2 Site Features
10-3 Soil Exceedances
10-4 Groundwater Exceedances 2007 and 2008 Samples
10-5 Conceptual Site Model
10-6 Cross Section
17-1 Proposed Sample Locations

Appendices

Appendix A Draft Meeting Minutes
Appendix B Field Screening Manufacturers Instructions
Appendix C Human Health Risk Assessment Methodology
Appendix D Field Standard Operating Procedures
Appendix E DOD ELAP Accreditation`
Appendix F Laboratory Standard Operating Procedures

ACRONYMS

°C	Degrees Celsius
AR	Administrative Record
BFB	Bromofluorobenzene
bgs	Below Ground Surface
BTEX	Benzene, Toluene, Ethylbenzene, and Xylene
CA	Corrective Action
CCB	Continuing Calibration Blank
CCC	Calibration Check Compound
CERCLA	Comprehensive Environmental Response Compensation and Liability Act
CFR	Code of Federal Regulations
CLEAN	Comprehensive Long-Term Environmental Action Navy
CS	Confirmatory Sampling
CSM	Conceptual Site Model
CTO	Contract Task Order
CVAA	Cold Vapor Atomic Absorption
DL	Detection Limit
DFTPP	Decafluorotriphenylphosphine
DoD	Department of Defense
DPT	Direct-push Technology
DQI	Data Quality Indicator
DQO	Data Quality Objective
DVM	Data Validation Manager
EE/CA	Engineering Evaluation/Cost Analysis
ELAP	Environmental Laboratory Accreditation Program
EPC	Exposure Point Concentration
EU	Exposure Unit
FID	Flame Ionization Detector
FIFRA	Federal Insecticide, Fungicide, and Rodenticide Act
FOL	Field Operations Leader
FOV	Fiber Optic Vault
FS	Feasibility Study
FTMR	Field Task Modification Request
GC/ECD	Gas Chromatography/Electron Capture Detector
GC/MS	Gas Chromatograph/Mass Spectrometer
H2SO4	Sulfuric Acid

HASP	Health and Safety Plan
HCl	Hydrochloric Acid
HDPE	High Density Polyethene
HI	Hazard Index
HNO3	Nitric Acid
IAS	Initial Assessment Study
ICB	Initial Calibration Blank
ICP-AES	Inductively Coupled Plasma-Atomic Emission Spectroscopy
ICS	Interference Check Standard
IDW	Investigation-derived Waste
ILCR	Incremental Lifetime Cancer Risk
LCS	Laboratory Control Sample
LIMS	Laboratory Information Management System
LNAPL	Light Non-aqueous Phase Liquid
LOD	Limit of Detection
LOQ	Limit of Quantitation
MCCS	Marine Corps Community Services
MCL	Maximum Concentration Level
MCRD	Marine Corps Recruit Depot
MIP	Membrane Interface Probe
MPC	Measurement Performance Criterion
MS	Mass Spectrometry
MS/MSD	Matrix Spike/Matrix Spike Duplicate
NAD	North American Datum
NAVFAC SE	Naval Facilities Engineering Command, Southeast
NCP	National Oil and Hazardous Substances Pollution Contingency Plan
NGVD	National Geodetic Vertical Datum
NTCRA	Non-Time Critical Removal Action
OSHA	Occupational Safety and Health Administration
PAH	Polycyclic Aromatic Hydrocarbons
PAL	Project Action Limit
PCB	Polychlorinated Biphenyl
PID	Photo-ionization Detector
PM	Project Manager
POC	Point of Contact
PQLG	Practical Quantitation Limit Goal
QA	Quality Assurance

QAM	Quality Assurance Manager
RAC	Remedial Action Contractor
RCRA	Resource Conservation and Recovery Act
RF	Response Factor
RFA	RCRA Facility Assessment
RI	Remedial Investigation
RPD	Relative Percent Difference
RPM	Remedial Project Manager
RSD	Relative Standard Deviation
SAP	Sampling and Analysis Plan
SCDHEC	South Carolina Department of Health and Environmental Control
SDG	Sample Delivery Group
SI	Site Inspection
SIM	Selected Ion Monitoring
SOP	Standard Operating Procedure
SPCC	System Performance Check Compound
SQL	Structured Query Language
SSL	Soil Screening Level
SSO	Site Safety Officer
SVOC	Semivolatile Organic Compound
TAL	Target Analyte List
TBD	To Be Determined
TCL	Target Compound List
TDS	Total Dissolved Solids
TOC	Total Organic Carbon
TSCA	Toxic Substances Control Act
Tetra Tech NUS	Tetra Tech, Inc.
UCL	Upper Confidence Limit
UFP	Uniform Federal Policy
USEPA	U.S. Environmental Protection Agency
UST	Underground Storage Tank
VOC	Volatile Organic Compound
VS	Verification Step
VSI	Visual Site Inspection

EXECUTIVE SUMMARY

Site 27, the Equipment Parade Deck, a 1-acre asphalt-covered area located in an industrial part of Marine Corps Recruit Depot (MCRD) Parris Island, was formerly used as a parade ground and is currently used for storage of miscellaneous equipment. For an unknown length of time, out-of-service storage tanks, concrete cylinders, boilers, scrap metal, and piping were stored here until suitable facilities for hauling, storage, or destruction of the materials were found. An unknown amount of hazardous materials was handled on the Parade Deck, possibly including waste petroleum products and metals. Additionally, transformers containing Polychlorinated Biphenyl (PCB) oils were reportedly stored in the northern portion of the Equipment Parade Deck; however, the exact location is not known. The asphalt is cracked or deteriorated in several areas.

MCRD Parris Island has identified a need for a military construction project that will relocate the Motor Transportation Facility which will include building a garage and other related facilities in the area previously recognized as the Site 27 Equipment Parade Deck (re-named the Motor-T Area). Previous investigations in the area of Site 27 indicated the presence of volatile organic compounds (VOCs), semivolatile organic compounds (SVOCs), pesticides, and inorganic contaminants in the soil and VOCs and pesticides in the groundwater. The contaminants found at the highest concentrations include select VOCs and pesticides in both soil and groundwater and the area of highest concentrations of these contaminants is the area around the Fiber Optic Vault (FOV), located 200 feet east of the Motor-T Area.

During the installation of the FOV in 2001, light non-aqueous phase liquid (LNAPL) was discovered floating on groundwater. In September 2001, a soil sample was collected next to the vault and results indicated the presence of benzene, toluene, ethylbenzene, and xylenes (BTEX). The FOV is referred to as Site 55.

The FOV Area is located upgradient of the Motor-T Area and as a result, the contaminated soil and groundwater in the FOV Area may be impacting groundwater or subsurface soil within the Motor-T Area of Site 27. The proposed investigation is needed to determine if any contamination is present in the Motor-T Area and if there are unacceptable risks to construction workers, as well as current maintenance workers, future industrial worker, and hypothetical future residents from exposure to environmental media in this area.

An earlier Conceptual Site Model (CSM) suggested that activities conducted at several sites surrounding Site 27 and Site 55, including Sites 9 and 16 (which are located northeast of the FOV Area and east of the Motor-T Area), may have contributed to potential contamination at Sites 27 and 55. Investigations to date seem to have disproved the earlier CSM and the source of contamination at Site 27 remains

unknown. Contamination migrating from FOV Area is believed to be the principal source of contamination at Site 27, although prior investigations indicates that other significantly smaller potential sources such as the former PCB transformer storage site exist on Site 27.

Investigations at the sites in the area of Site 27 included the Initial Assessment Study (IAS) in 1986 (Sites 9 and 16), a Remedial Investigation (RI) Verification Step (VS) in 1988 (Site 16), a Resource Conservation and Recovery Act (RCRA) Facility Assessment (RFA), which included a file review and Visual Site Inspection (VSI) in 1990 (Sites 9, 16, and 27), Relative Site Ranking efforts in 1995 (Sites 9 and 27), Site Inspection (SI)/Confirmatory Sampling (CS) in 1999 (Sites 9 and 27), Soil and Groundwater Field Screening in 2002 (Site 55), a Groundwater Investigation in 2003 (Site 55), and two phases of an RI (2007 and 2008). Some of these investigations included only a review of available files on the sites to determine if there was a possibility of contaminant release to the environment. Other investigations included field activities such as soil and groundwater sampling.

A remedial action in the area of Site 27 included a soil removal at Site 9 in 1984. On several occasions, petroleum hydrocarbons that had formed a LNAPL layer on the groundwater and that had accumulated in the FOV at Site 55 were removed as general site maintenance.

VOCs, SVOCs [including polycyclic aromatic hydrocarbons (PAHs)], pesticides, PCBs, and metals were detected sporadically in the soil samples collected in 2007 and 2008 from around the Motor-T Area at concentrations below risk-based screening criteria for most chemicals. PAHs were detected in two surface soil samples at concentrations above risk-based screening criteria. High concentrations of VOCs and pesticides (above screening criteria) were detected in soil samples collected from around the FOV and in soil samples downgradient of the FOV (including one in the Motor-T Area, PAI-27-SO-28). As with previous investigations, wide-spread elevated concentrations of VOCs and pesticides (above screening criteria) were detected in the groundwater samples from around the FOV. Low concentrations of SVOCs and PAHs were also detected sporadically in groundwater samples from the area. This investigation, in part, tested the earlier CSM that the original source of groundwater contamination might have been Site 9 and/or Site 16. However, groundwater sampling results and groundwater surface elevation measurements did not support the earlier CSM.

Preliminary evaluation of the historic data and the Phase I and Phase II RI data indicates that contact with surface soil, subsurface soil, and groundwater in the Site 27 area may present unacceptable risks to human receptors. Most of the contamination is present in the FOV Area in the form of an LNAPL plume. A Non-Time Critical Removal Action (NTCRA) will most likely be conducted in the near future to address the LNAPL and heavily contaminated soil in the vicinity of the FOV. In order to complete an Engineering Evaluation/Cost Analysis (EE/CA) and conduct the NTCRA, the LNAPL plume located in the area of the

FOV must be delineated and the extent of contaminated soil and groundwater must be defined. The groundwater sampling will take place during this investigation from all existing groundwater wells within Sites 27 and 55 and two newly installed temporary well clusters near PAI-27-SO28 as presented in this UFP- SAP. The soil delineation in Site 55 will be presented in another UFP-SAP.

This investigation is being conducted as a result of the MCRD Parris Island plans to relocate the Motor-T Area. Because contaminated soil and groundwater from the Site 55 FOV Area may extend under the proposed Motor-T Area, additional soil samples are needed to determine if any contamination is present, characterize any potential LNAPL smear zone, and evaluate if there are unacceptable risks to construction workers, and future receptors (e.g., industrial workers, maintenance workers, and hypothetical residents) from exposure to environmental media in this area. In addition, groundwater samples will be collected during this investigation to provide complete delineation and characterization of groundwater contamination within Site 27 including any potential LNAPL plume.

SAP Worksheet #2 -- SAP Identifying Information

(UFP-QAPP Manual Section 2.2.4)

Site Name/Number:	**Site 27 - Equipment Parade Deck**
Operable Unit:	**Not Applicable**
Contractor Name:	**Tetra Tech, Inc. (Tetra Tech)**
Contract Number:	**N62467-04-D-0055**
Contract Title:	**Comprehensive Long-Term Environmental Action Navy (CLEAN)**
Work Assignment Number:	**Contract Task Order (CTO) 0166**

1. This Sampling and Analysis Plan (SAP) was prepared in accordance with the requirements of the U.S. Environmental Protection Agency (USEPA) *Uniform Federal Policy for Quality Assurance Plans (UFP-QAPP)* (USEPA, March 2005) and *EPA Guidance for Quality Assurance Project Plans, EPA QA/G-5, (*USEPA, December 2002*)*.

2. Identify regulatory program:

   Comprehensive Environmental Response, Compensation, and Liability Act (CERCLA)

3. This document is a project-specific SAP.

4. List dates of scoping sessions that were held:

   Data Quality Objective (DQO) Scoping Session, September Partnering Team Meeting - September 15 and 16, 2009

5. List dates and titles of any SAP documents written for previous site work that are relevant to the current investigation.

Title	*Date*
Draft Site Inspection/Confirmatory Sampling Report for Site/SWMU 4, Site/SWMU 5, Site/SWMU 7, Site 9/SWMU 8, Site 13C/SWMU 13, Site/SWMU 16, SWMU 27 and SWMU 35, MCRD Parris Island.	July 2002
Preliminary Assessment/Site Inspection and Confirmatory Sampling Report for Site/SWMU 55, Fiber Optic Vault, MCRD Parris Island	August 2004
Conceptual Site Model, Site 27, Equipment Parade Deck, MCRD Parris Island, South Carolina.	June 2009

6. List organizational partners (stakeholders) and connection with lead organization:

   MCRD Parris Island – tenant
   USEPA, Region 4 – regulatory oversight
   South Carolina Department of Health and Environmental Control (SCDHEC) – regulatory oversight

7. Lead organization

   Department of the Navy, Naval Facilities Engineering Command, Southeast (NAVFAC SE)

8. If any required UFP-SAP elements or required information are not applicable to the project or are provided elsewhere, then note the omitted SAP elements and provide an explanation for their exclusion below:

   All required elements are included in this SAP.

UFP-SAP Worksheet #	Required Information	Crosswalk to Related Information
A. Project Management		
Documentation		
1	Title and Approval Page	Not Applicable
2	Table of Contents SAP Identifying Information	Not Applicable
3	Distribution List	Not Applicable
4	Project Personnel Sign-Off Sheet	Not Applicable
Project Organization		
5	Project Organizational Chart	Not Applicable
6	Communication Pathways	Not Applicable
7	Personnel Responsibilities and Qualifications Table	Not Applicable
8	Special Personnel Training Requirements Table	Not Applicable
Project Planning/ Problem Definition		
9	Project Planning Session Documentation (including Data Needs tables) Project Scoping Session Participants Sheet	Not Applicable
10	Problem Definition, Site History, and Background. Site Maps (historical and present)	Not Applicable
11	Site-Specific Project Quality Objectives	Not Applicable
12	Measurement Performance Criteria Table	Not Applicable
13	Sources of Secondary Data and Information Secondary Data Criteria and Limitations Table	Not Applicable
14	Summary of Project Tasks	Not Applicable
15	Reference Limits and Evaluation Table	Not Applicable
16	Project Schedule/Timeline Table	Not Applicable
B. Measurement Data Acquisition		
Sampling Tasks		
17	Sampling Design and Rationale	Not Applicable
18	Sampling Locations and Methods/ Standard Operating Procedure (SOP) Requirements Table/Sample Location Map(s)	Not Applicable
19	Analytical Methods/SOP Requirements Table	Not Applicable
20	Field Quality Control Sample Summary Table	Not Applicable
21	Project Sampling SOP References Table Sampling SOPs	Not Applicable
22	Field Equipment Calibration, Maintenance, Testing, and Inspection Table	Not Applicable
Analytical Tasks		
23	Analytical SOPs Analytical SOP References Table	Not Applicable
24	Analytical Instrument Calibration Table	Not Applicable
25	Analytical Instrument and Equipment Maintenance, Testing, and Inspection Table	Not Applicable

UFP-SAP Worksheet #	Required Information	Crosswalk to Related Information
Sample Collection		
26	Sample Handling System, Documentation Collection, Tracking, Archiving and Disposal Sample Handling Flow Diagram	Not Applicable
27	Sample Custody Requirements, Procedures/SOPs Sample Container Identification Example Chain-of-Custody Form and Seal	Not Applicable
Quality Control Samples		
28	Quality Control Samples Table Screening/Confirmatory Analysis Decision Tree	Not Applicable
Data Management Tasks		
29	Project Documents and Records Table	Not Applicable
30	Analytical Services Table Analytical and Data Management SOPs	Not Applicable
C. Assessment Oversight		
31	Planned Project Assessments Table Audit Checklists	Not Applicable
32	Assessment Findings and Corrective Action Responses Table	Not Applicable
33	Quality Assurance Management Reports Table	Not Applicable
D. Data Review		
34	Verification (Step I) Process Table	Not Applicable
35	Validation (Steps IIa and IIb) Process Table	Not Applicable
36	Validation (Steps IIa and IIb) Summary Table	Not Applicable
37	Usability Assessment	Not Applicable

SAP Worksheet #3 -- Distribution List

(UFP-QAPP Manual Section 2.3.1)

Name of SAP Recipient	Title/Role	Organization	Telephone Number	E-Mail Address or Mailing Address
Charles Cook	Navy Remedial Project Manager (RPM)	NAVFAC SE	(904) 542-6409	charles.cook2@navy.mil
Tim Harrington	MCRD Parris Island Point of Contact (POC)	MCRD Parris Island	(843) 228-3423	timothy.j.harrington@usmc.mil
Lila Llamas	USEPA RPM	USEPA Region 4	(404) 562-9969	Llamas.Lila@epa.gov
Meredith Amick	State RPM	SCDHEC	(803) 896-4218	AmickMS@dhec.sc.gov
Mark Sladic	Project Manager (PM)	Tetra Tech	(412) 921-8216	mark.sladic@tetratech.com
Shannon Hill	Field Operations Leader (FOL)	Tetra Tech	(412) 920-8876	shannon.hill@tetratech.com
Shannon Hill	Site Safety Officer (SSO)	Tetra Tech	(412) 920-8876	shannon.hill@tetratech.com
Cathy Dover	Laboratory Project Manager (PM)	CompuChem	(919) 379-4089	cdover@compuchemlabs.com
Bonnie Capito	Administrative Record (AR)/Librarian	NAVFAC Atlantic	(757) 322-4785	bonnie.capito@navy.mil
Dearal Rodgers	Drilling Subcontractor	ARM Environmental Services, Inc.	(803) 783-3314	arm@armenv.com

Each person listed in this table will be responsible for distributing copies of this SAP to appropriate personnel within their organization. For example, the PM will be responsible for distributing copies of this SAP to all project personnel listed in Worksheet #4 (Personnel Sign-Off Sheet).

SAP Worksheet #4 -- Project Personnel Sign-Off Sheet

(UFP-QAPP Manual Section 2.3.2)

Name	Organization/Title/Role	Telephone Number	Signature/E-Mail receipt	SAP Section Reviewed	Date SAP Read
Mark Sladic	TtNUS/TOM (decision maker for TtNUS)	(412) 921-8216		All	
Preston Smith	TtNUS/Risk Assessor (assists with risk assessments)	(412) 921-8167		All	07-26-10
Kelly Carper	TtNUS/CLEAN SE Quality Assurance Manager (QAM) (reviews SAP)	(412) 921-7273		All	
Matthew Kraus	TtNUS/Project Chemist (provides input on analytical methods, etc.)	(412) 921-8729		All	7-26-10
Joseph Samchuck	TtNUS/Data Validation Manager (DVM) (oversees validation of data)	(412) 921-8510		Worksheets #12, #14, #15, #19, #20, #23-28, #30, #34-37	9-23-10
Shannon Hill	TtNUS/FOL (oversees overall field team effort)	(412) 920-8876		All and Health and Safety Plan (HASP)	7/22/10
Shannon Hill	TtNUS/SSO (oversees safety of field team)	(412) 920-8876		All and HASP	7/22/10
Cathy Dover	CompuChem/PM (decision maker for laboratory)	(919) 379-4089		Worksheets #12, #14, #15, #19, #20, #23-28, #30, #34-36	8/13/10

SAP Worksheet #5 -- Project Organizational Chart

(UFP-QAPP Manual Section 2.4.1)

Lines of Authority ——— Lines of Communication ·····

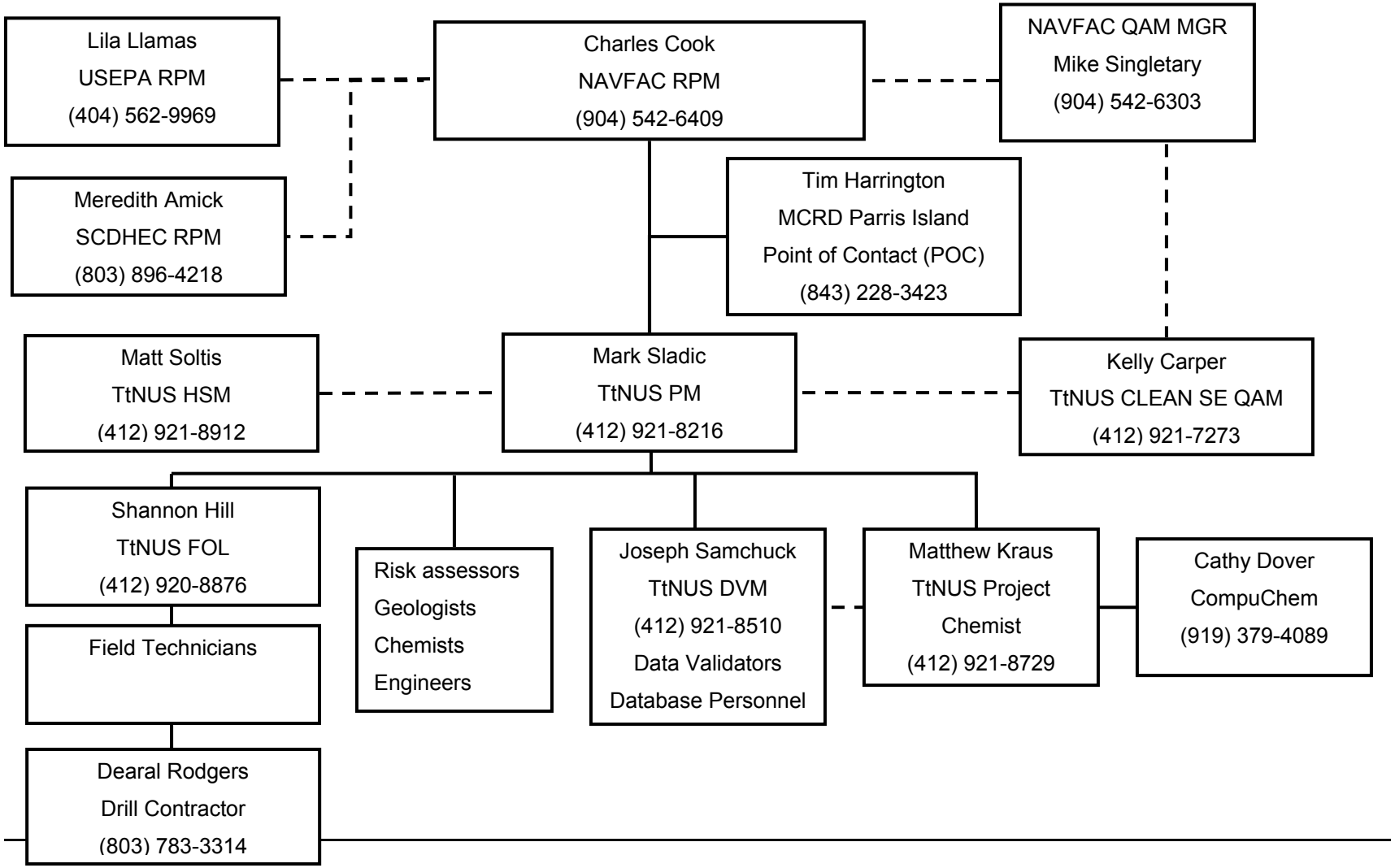

SAP Worksheet #6 -- Communication Pathways

(UFP-QAPP Manual Section 2.4.2)

Communication Driver	Responsible Affiliation	Name	Phone Number and/or E-Mail Address	Procedure
Field Task Modification Requests (FTMRs) – Sampling	Tetra Tech FOL	Shannon Hill	412.920.8876	FOL informs Tetra Tech PM verbally the day the issue is realized. Document via FTMR Form within 3 days. The Tetra Tech PM will notify the PI Team of the via email within 1 day of the FOL's notification. To the extent practical, Navy/Tetra Tech will work with the Team if any objections or concerns are identified by Team Members prior to implementation.
SAP Amendments	Navy RPM	Charles Cook	904.542.6409	Mail scope change to Tetra Tech Program Management Office within 1 week.
Schedule Changes	Tetra Tech PM	Mark Sladic	412.921.8216	Inform Navy via e-mail or verbal communication within 2 days of realizing impact. Navy informs PI Team via email within 1 day.
Field issues that require changes in the scope or implementation of field work	Tetra Tech PM Tetra Tech FOL	Mark Sladic Shannon Hill	412.921.8216 412.920.8876	FOL informs PM via verbal communication within 1 day of recognizing need for change. PM informs Navy RPM via verbal communication within 2 days of recognizing need for change. Navy RPM concurs with change within 2 days of recognizing need for change, after consulting with the PI Team for consensus, except where already approved in the SAP.
Stop work recommendations, for example, to protect workers from unsafe conditions or situations or to prevent a degradation in quality of work	Tetra Tech PM Tetra Tech FOL Tetra Tech CLEAN SE QAM Tetra Tech HSM Navy RPM	Mark Sladic Shannon Hill Kelly Carper Matt Soltis Charles Cook	412.921.8216 412.920.8876 412.921.7273 412.921.8912 904.542.6409	Responsible party informs subcontractors, Navy, and project team within 1 week via e-mail or verbal communication. If stop work order is issued, document via letter or memorandum to file. Navy to inform PI Team via email within 1 day.
Field or laboratory data issues	CompuChem Tetra Tech Project Chemist Navy RPM	Cathy Dover Matthew Kraus Charles Cook	919.379.4089 412.921.8729 904.542.6409	Within 2 days of noting a deficiency, notify Tetra Tech Project Chemist via e-mail or verbal communication. Notify Data Validation Staff and Tetra Tech PM via e-mail or verbal communication within 1 day of identifying deficiency. Tetra Tech to notify the PI Team via email within 1 day.

SAP Worksheet #7 – Personnel Responsibilities and Qualification's Table

(UFP-QAPP Manual Section 2.4.3)

Name	Title, Role	Organizational Affiliation	Responsibilities
Mark Sladic	PM, Decision maker for Tetra Tech	Tetra Tech	Oversees project, financial, schedule, and technical day to day management of the project.
Kelly Carper	QAM, Provides quality assurance review of SAP	Tetra Tech	Ensures quality aspects of the CLEAN program are implemented, documented, and maintained.
Matthew Kraus	Project Chemist, provides input on analytical requirements	Tetra Tech	Participates in project scoping, prepares laboratory scopes of work, and coordinates laboratory-related functions with laboratory. Oversees data quality reviews and quality assurance of data validation deliverables.
Preston Smith	Task Manager, assists Project Manager	Tetra Tech	Assists project manager. Coordinates and oversees work performed by Tetra Tech field and office technical staff (including data validation, data interpretation, risk assessment, and report preparation). Coordinates and oversees review of Tetra Tech project deliverable. Prepares and issues final Tetra Tech deliverables to the Navy.
Joseph Samchuck	DVM, Oversees validation of analytical data	Tetra Tech	Manages data validation activities within Tt, including: • Ensure quality assurance of data validation deliverables. • Provide technical advice on data usability. • Coordinate and maintain data validation review schedule.
Shannon Hill	SSO, Ensures compliance with HASP	Tetra Tech	Responsible for on-site project specific health and safety training and monitoring site conditions. Details of these responsibilities are presented in the HASP.
Shannon Hill	FOL, Supervisor of Field Team	Tetra Tech	Supervises, coordinates, and performs field sampling activities.
Cathy Dover	PM, Decision maker for Laboratory	CompuChem	Coordinates analyses with laboratory chemists, ensures that scope of work is followed, provides QA of data packages, and communicates with Tt project staff.
Charles Cook	RPM, Decision maker for Navy	Navy	Oversees project implementation, including scoping, data review, and evaluation.
Lila Llamas	RPM, Decision maker for USEPA	USEPA	Functions as the primary USEPA interface with the Navy RPM, MCRD POC, Tetra Tech PM, and SCDHEC RPM.
Meredith Amick	RPM, Decision maker for SCDHEC	SCDHEC	Functions as the primary SCDHEC interface with the Navy RPM, MCRD POC, Tetra Tech PM, and USEPA RPM.

Name	Title, Role	Organizational Affiliation	Responsibilities
Tim Harrington	Site Manager/Manages daily site activities related to this project	MCRD Parris Island POC	Oversees site activities and participates in scoping, data review, evaluation, and reviews the SAP.
Dearal Rodgers	Drilling Subcontractor	ARM Environmental Services, Inc.	Oversees and implements drilling activities according to SOPs provided in Appendix D.

In some cases, one person may be designated responsibilities for more than one position. For this UFP-SAP, the FOL may also be responsible for SSO duties and Site QA/QC responsibilities. This action will be performed only as credentials, experience, and availability permits.

SAP Worksheet #8 -- Special Personnel Training Requirements Table

(UFP-QAPP Manual Section 2.4.4)

All field personnel will have appropriate training to conduct the field activities to which they are assigned. Additionally, each site worker will be required to have completed a 40-hour course (and 8-hour refresher, if applicable) in health and safety training as described under Occupational Safety and Health Administration (OSHA) 29 Code of Federal Regulations (CFR) 1910.120(b)(4). Safety requirements are addressed in greater detail in the site-specific Tetra Tech HASP.

SAP Worksheet #9 -- Project Scoping Session Participants Sheet

(UFP-QAPP Manual Section 2.5.1)

Project Name: Site 27 Motor-T Area Site Characterization Sampling Projected Date(s) of Sampling: Spring 2010 Project Manager: Mark Sladic	Site Name: Site 27 - Equipment Parade Deck Site Location: MCRD Parris Island, South Carolina

Date of Session: September 15 and 16, 2009 (September Partnering Meeting)
Scoping Session Purpose: DQO Development.

Name	Title, Affiliation	Phone #	E-mail Address	Project Role
Mark Sladic	PM, Tetra Tech	(412) 921-8216	mark.sladic@tetratech.com	PM
Peggy Churchill	Environmental Scientist, Tetra Tech	(321) 636-6470	peggy.churchill@tetratech.com	DQO Facilitator
Greg Zimmerman	Environmental Engineer, Tetra Tech	(412) 921-8351	greg.zimmerman@tetratech.com	Project Engineer
Charles Cook	RPM, NAVFAC SE	(904) 542-6409	charles.cook2@navy.mil	Navy RPM
Tim Harrington	POC, MCRD Parris Island	(843) 228-3423	timothy.j.harrington@usmc.mil	MCRD Parris Island POC
Lila Llamas	RPM, USEPA	(404) 562-9969	Llamas.Lila@epa.gov	USEPA RPM
Meredith Amick	RPM, SCDHEC	(803) 896-4218	AmickMS@dhec.sc.gov	SCDHEC RPM
Susan Byrd	Risk Assessor, SCDHEC	(803) 896-4255	Byrdsk@dhec.sc.gov	Risk Assessment Support

Comments/Decisions

Site 27 Path Forward

The ultimate goal is to have a ROD and remedy in place. A short-term goal is to determine how best to carry out CERCLA and remedial without hindering Depot construction activities. The Navy indicated that an EE/CA provides the Depot with better support because contamination in the vault is an operational hindrance (NAPL layer pumping, etc.) The Navy is trying to determine the appropriate regulatory path to follow for any upcoming Site 27 work. USEPA and DHEC indicated that they cannot support an RI with data gaps and DHEC reminded the Team that LNAPL removal may be necessary.

The Navy indicated that funds for the Motor-T Area construction at Site 27 will expire September 2012 and the construction needs to be started by March 2011.

Several alternatives for the path forward were discussed.

DQOs for the Motor-T Area were discussed.

Motor-T Area Analyte List – Target Compound List (TCL) VOCs (risk driver), SVOCs, pesticides (risk driver), PCBs, Target Analyte List (TAL) metals, PAHs.

Can previously collected data (1995, 2002, 2004, 2007, and 2008) be used in conjunction with new data for the risk assessment? Per DHEC, it is not reasonable to use 1995, 2002, or 2004 data for current exposure scenarios. However, 2007 and 2008 data is acceptable.

Action Items

Mark Sladic is to arrange a conference call with Charles Cook, Peggy Churchill, and Mike Singletary to discuss if the RAC contractor can perform work at Site 27 without a UFP SAP.

Tim Harrington is to ensure the RAC will not disturb the area east of the fence line (proposed parking lot/vault area) during construction activities at Site 27 and confirm this is acceptable to Public Works.

Greg Zimmerman is to have a map made of Site 27 to include SVOCs, VOCs, and pesticide detections. Greg Zimmerman is to evaluate background data options for Site 27 (soil and sediment). Greg Zimmerman is to review National Contingency Plan (NCP) for definition of principal threat waste and applicability to 270,000 ppm DDT.

Consensus Decisions

Consensus Item: The Team reached consensus that completing the RI, following it with an EE/CA, and revising the RI is not an option for Site 27.

Consensus Item: The Team reached consensus that the proposed path forward for Site 27 (if it can be done without a UFP SAP) is for the RAC to delineate and to clear the construction site; prepare an EE/CA, Action Memo, and Removal Action Work Plan; perform a removal action if necessary; and conduct post-removal confirmation sampling. After the constructions site area is cleared (inside purple line box), the RAC will complete a UFP SAP for the remainder of the LNAPL delineation as well as the RI data gaps, mobilize to implement the UFP SAP, and use data to complete the RI and develop an FS. If a

UFP SAP has to be completed prior to delineation of the construction site area, the RAC will prepare a UFP SAP for that effort.

Consensus Item: The Team reached consensus to perform data gap sampling at the Motor-T Area (Site 27 – inside purple box) while Tetra Tech evaluates current background data options and attempts to construct a background data set from existing Parris Island data. If adequate Parris Island data are not available, then consider a local (Beaufort) background data set. Evaluation will be conducted by the Team to determine the applicability and comparability of the background data set. If PAHs are a risk driver and an existing background data set is not applicable or comparable, a site-specific PAH background data set will need to be collected.

Consensus Item: The Team reached consensus that 2007 and 2008 data can be used in the risk assessment for the Motor-T Area (Site 27).

Consensus Item: The Team reached consensus to proceed at risk with sampling all of Site 27 to include the installation and sampling of one temporary groundwater monitoring well on each side of “line” (for a total of two temporary monitoring wells) at SO 28 without step outs on the eastern side. If excavation occurs on the western one-half of SO 28 and if the eastern well boring is contaminated, clean fill going into the western one-half of SO 28 must be resampled prior to excavation of the eastern one-half of SO 28.

The draft minutes of the September 15 to 16, 2009 and April 27 to 28, 2010 Partnering Team Meeting are included in this SAP in Appendix A.

SAP Worksheet #10: Conceptual Site Model

(UFP-QAPP Manual Section 2.5.2)

10.1 SITE BACKGROUND

Site 27, the Equipment Parade Deck, a 1-acre asphalt-covered area located in an industrial part of MCRD Parris Island (Figure 10-1), was formerly used as a parade ground and is currently used for storage of miscellaneous equipment (Figure 10-2). For an unknown length of time, this site has been an area where out-of-service storage tanks, concrete cylinders, boilers, scrap metal, and piping were stored until suitable facilities for hauling, storage, or destruction of the materials were found. An unknown amount of hazardous materials were handled on the Parade Deck, possibly including waste petroleum products and metals. Additionally, transformers containing PCB oils were reportedly stored in the northern portion of the Equipment Parade Deck; however, the exact location is not known. The asphalt is cracked or deteriorated in several areas, potentially allowing contaminants from potential releases from stored equipment to enter underlying soil.

Site 27 is surrounded by several other sites that have contamination in soil or groundwater. Most importantly, the FOV (now listed as Site 55) was installed in September 2001 and is located approximately 20 feet east of Atsugi Street, 100 feet southwest of Building 401, and 140 feet northwest of Building 405 (Figure 10-2). The vault is an oversized utility manhole used for the installation of fiber optic communications cables in this part of MCRD. There is no regular or routine access to the vault. The vault is comprised of pre-cast concrete with inner dimensions of 12 feet by 6 feet by 7 feet deep. The walls include blanked cutouts for fiber optic cables to enter the vault from the north, east, south, and west. The site is relatively flat with both grassy and paved areas. Overhead steam lines are present near the vault, and an underground sewer line is located approximately 70 feet to the northeast. When the FOV was being constructed, LNAPL was discovered floating on water in the vault interior. In September 2001, a soil sample was collected next to the vault and results indicated the presence of benzene, toluene, ethylbenzene, and xylenes (BTEX). Site 55 is located just east of Site 27 and based on prior investigations, it is likely that contaminants from Site 55 have migrated to Site 27 and impacted subsurface soil and groundwater within Site 27.

It was previously assumed by the MCRD Partnering Team that activities conducted at several sites surrounding Site 27 and Site 55, including Sites 9, 16, may have contributed to potential contamination at Site 27 and 55 (Figure 10-2). Investigation to date seems to have disproved the earlier CSM and the source of contamination at Site 27 remains unknown. Contamination migrating from Site 55 is believed to be the principal source of contamination at Site 27, although prior investigation indicates that other significantly smaller potential sources may exist within Site 27. As a result of the original CSM, Site 9, 16,

27 and 55 were investigated concurrently. However, now that it has been determined, through investigations and results presented in Section 10.2, that Site 9 and 16 are not likely contributing contamination to Site 27, these sites will be approached separately in the future. However, the results from previous investigations at Sites 9 and 16 are included here as they support the current Site 27 CSM.

Detailed historical building use information is not known to exist for the buildings in the area of Site 27. MCRD Parris Island reports that Building 401 is a RCRA/Toxic Substances Control Act (TSCA)/Federal Insecticide, Fungicide, and Rodenticide Act (FIFRA)-compliant pest control facility that was constructed in the early 1990s and that Building 405 is a small warehouse that has been used by the 3rd Battalion and Marine Corps Community Services (MCCS) over the past 10 years. Building 852 (approximately 200 feet to the north) has housed administrative functions for at least the past 30 years, with no known pesticide handling activity at any time.

10.2 PREVIOUS INVESTIGATIONS AND ACTIONS

Previous investigations at the sites in the area of Site 27 include the Initial Assessment Study (IAS) in 1986 (Sites 9 and 16), a RI Verification Step (VS) in 1988 (Site 16), a RFA, which included a file review and Visual Site Inspection (VSI) in 1990 (Sites 9, 16, and 27), Relative Site Ranking efforts in 1995 (Sites 9 and 27), SI/Confirmatory Sampling (SI/CS) in 1999 (Sites 9 and 27), Soil and Groundwater Field Screening in 2002 (Site 55), and a Groundwater Investigation in 2003 (Site 55). Some of these investigations included only a review of available files on the sites and a determination if there was a possibility of contaminant release to the environment based on the information in the files and some of the investigations included field activities such as soil and groundwater sampling.

No CERCLA remedial actions have been completed at the site. At the time of FOV installation, there was no indication of soil or groundwater contamination, It is unclear if the soil excavated to install the FOV was removed from site, or spread across the site. Based on later surface soil results, spreading across the site does seem possible. Following installation of the FOV, groundwater infiltration into the structure was observed. Based on the known groundwater elevation, this was not surprising. Water was pumped from the vault to allow access to complete the fiber optics installation. At the time the water was pumped out, sheen was observed and so a sample was collected. Based on fuel tanks several hundred yards away, the water was tested for BTEX and other VOCs. Upon identification of chlorobenzene in the sample results, the site administration transferred from the UST Program to the IR Program at MCRD.

10.2.1 Site Inspection/Confirmatory Sampling – Sites 9 and 27 (1999)

Seven sites at MCRD Parris Island, including Sites 9 and 27 were addressed during the SI/CS. The resulting report also included the results of samples collected during the 1995 Relative Site Ranking

effort. During the SI/CS field event, two groundwater samples were collected at Site 9 and three surface soil samples were collected at Site 27 in December 1999.

Three soil samples were collected from approximately 6 inches below ground surface (bgs) at Site 9 during the relative site ranking effort. Results indicated concentrations of three VOCs, 12 SVOCs (including 10 PAHs), four pesticides, one PCB, and 18 metals were detected in soil above human health and/or ecological screening criteria). Additionally, two temporary monitoring wells were installed at Site 9 in December 1999. VOCs were not detected in the groundwater samples collected at Site 9 and, while several metals were detected in the groundwater, only aluminum was detected at a concentration that exceeded any of the screening criteria current in 2002.

Evaluation of the 1995 soil data indicated that past use of Site 27 as a transformer storage area did not impact the soil with PCBs. However, detections of VOCs, PAHs, pesticides, and metals in these soil samples indicate that some impact has occurred. In addition, PCBs were not detected in the three surface soil samples collected in 1999 at Site 27.

It was recommended in the SI/CS Report that land use controls at both Sites 9 and 27 be implemented to prohibit residential development of the sites. The SI/CS Report also recommended that if the industrial setting at Sites 9 or 27 were to change in the future, a reevaluation of the decision to implement land use controls should be considered (Tetra Tech, July 2002).

10.2.2 Installation of the FOV and Product Removal – Site 55 (2001 and 2003)

Site 55 was initially included under the Underground Storage Tank (UST) program. In September 2001, following installation of the vault, petroleum hydrocarbons (LNAPL) and water were observed within the vault. In late October 2001, approximately 0.5 inch of free product was observed in the vault floating on approximately 1 foot of water. Efforts were made to remove the free product and stop the infiltration of groundwater into the vault by applying a sealing compound to the internal concrete surfaces. In late fall 2001, the free product and water in the vault were pumped out and the vault was steam cleaned. During early 2002, the water table had fallen and the lower row of cutouts was capped to prevent additional accumulation of fluids. Water/free product was also removed from the vault by Tetra Tech in March 2003, and the internal concrete surface was resealed at this time.

10.2.3 Soil and Groundwater Field Screening – Site 55 (2002)

In July 2002, soil and groundwater field screening were performed at Site 55 using direct-push technology (DPT) and a membrane interface probe (MIP). The photo-ionization detector (PID) and flame ionization detector (FID) MIP detectors responded significantly (according to the MIP contractor), suggesting the

presence of petroleum fuels, with the majority of contamination appearing below the first confining layer at approximately 7 feet bgs. Two deeper locations were probed with low response. The MIP contractor concluded that the plume appeared quite concentrated, and provided some graphics in support of this conclusion. However, the graphics are non-scaled 3-D visualizations and are difficult to overlay onto site maps with real features that are to scale and representative of actual conditions. Chlorobenzene and pesticides have high boiling points, and therefore, are therefore poor MIP responders. Because they are the primary, and are the highest concentration contaminants in the plume, the MIP results are of only limited value, and have largely been superseded by the analytical results from temporary and permanent groundwater monitoring wells for laboratory analytical samples.

The results of the field screening indicated that the shallow surficial aquifer was contaminated (Tetra Tech, August 2004). Floating product was detected in one boring, although it was not detected in the adjacent boring. The highest concentrations of contaminants including BTEX, chlorobenzene, MTBE, and naphthalene were found in borings west of the FOV and one boring located immediately east of the Fiber Optic Vault. However, soil analytical data obtained during the screening indicated minimal soil contamination within the DPT borings. Chlorobenzene and naphthalene were the only analytes detected in the soil borings (Tetra Tech, August 2004).

10.2.4 Groundwater Investigation – Site 55 (2003)

Site 55 was initially investigated under the Underground Storage Tank (UST) program but, based on the results of the 2002 field screening (Section 10.2.3), SCDHEC requested that the site be transferred to the Bureau of Land and Waste Management RCRA Program for oversight (Tetra Tech, August 2004). The results of the July 2002 field screening were used to select the locations for 21 monitoring wells that were installed in December 2002 in the Site 55 area. Twelve of the monitoring wells were developed and sampled in July 2003 to attempt to locate a contamination source area, to characterize the intermediate and deep portions of the surficial aquifer, and to investigate the downgradient shallow surficial aquifer within the location of Site 27. Because the site had been switched to the IR Program, the analytical program for these groundwater samples was expanded to include VOCs, SVOCs, pesticides, and PCBs. Because of the limited surface soil detections observed during the 2002 field screening, a soil sampling program was not conducted during the July 2003 investigation.

Free product was encountered at monitoring well PAI-27-MW06S when the wells were installed in December 2002, but was not encountered in any of the monitoring wells sampled during the July 2003 groundwater sampling event. The 2003 analytical results indicated the presence of 11 VOCs, 10 SVOCs, and seven pesticides in the groundwater samples collected from the monitoring wells in the Site 55 area and confirmed the presence of chlorobenzene, BTEX, and naphthalene (detected in the 2002 field screening). However, the concentrations of these compounds in the 2003 samples were significantly

lower than the concentrations detected in the 2002 field screening samples. The Preliminary Assessment/Site Inspection and Confirmatory Sampling Report for Site 55 recommended that a focused remedial investigation to further characterize the nature and extent of contamination related to a potential petroleum and/or pesticide release and to quantify risks posed to human health and the environment (Tetra Tech, August 2004) be conducted at Site 55.

10.2.5 Remedial Investigation – Site 27 (2007 and 2008)

MCRD Parris Island identified a need for a military construction of a Motor-T Area at Site 27 and, as a consequence, the need for further investigation of the Site 27 area. The investigations at Site 55 identified impacts to Site 27 groundwater from Site 55, therefore the Site 27 Phase I and Phase II RI field activities included a larger area, which encompassed Sites 9 and 16, the Equipment Parade Deck Area, and the FOV Area. However, as a result of the upcoming construction activities, it is necessary to assess risk to construction workers, current maintenance worker, future construction workers, future industrial workers, and hypothetical future residents from exposure to environmental media in the planned construction area. Therefore, the investigation boundary for this investigation is limited to Site 27, which has been renamed the Motor-T Area.

Phase I of the Site 27 RI was conducted in July 2007 and the field activities supported the collection of data to characterize the nature and extent of contamination and to assess the human health risk associated with potential direct contact with contaminants. Phase II of the Site 27 RI was conducted in August 2008 and the field activities supported the collection of data to define the extent of the pesticide and chlorobenzene (and other VOCs) contamination in groundwater and to determine if there is a soil source of pesticides and VOCs in the Site 27/Site 55 area.

Twenty-six temporary monitoring wells (12 shallow, 13 intermediate, and one deep) and 17 permanent monitoring wells (nine shallow and eight intermediate) were installed in 2007 and 2008. Groundwater samples were collected from the 26 temporary monitoring wells, the 17 newly installed permanent monitoring wells, and from existing permanent monitoring wells. Soil samples were collected from soil samples around the perimeter of the Motor-T area in 2007 and from around the FOV in 2008. One sample of the LNAPL was collected in 2008 from an existing monitoring well. Depth to the water table and associated hydrological data are provided in Table 10-1 and 10-2 for the 2007 and 2008 groundwater sampling events, respectively.

VOCs, SVOCs (including PAHs), pesticides, PCBs, and metals were detected sporadically in the soil samples from around the Motor-T area at concentrations below risk based screening criteria, although PAHs were detected in two surface soil samples at concentrations above risk based screening criteria. High concentrations of VOCs and pesticides (above screening criteria) were detected in soil samples

collected from around the FOV and in soil samples downgradient of the FOV (including one in the Motor-T area). As with previous investigations, wide-spread elevated concentrations of VOCs and pesticides (above screening criteria) were detected in the groundwater samples from around the FOV. Low concentrations of SVOCs and PAHs were detected sporadically in the groundwater samples throughout the area. This investigation, in part, tested the earlier CSM that the original source of groundwater contamination might have been Site 9 and/or Site 16. However, installation and sampling of several groundwater monitoring wells, in addition to groundwater surface elevation measurements did not support the earlier CSM.

Figure 10-3 shows exceedances of soil criteria in all soil samples collected from the Site 27 area and Figure 10-4 shows exceedances of groundwater criteria in ground water samples collected from the Site 27 area in 2007/2008.

10.3 CONCEPTUAL SITE MODEL

The Conceptual Site Model (CSM) is presented in Figure 10-5

10.3.1 Potential or Known Sources of Contamination

The source of contaminants within the Site 55 FOV Area appears to be a petroleum hydrocarbon material including pesticides mixed with fuel oil for pesticide application purposes (Figure 10-3 and 10-4). The material has impacted surface soil, subsurface soil, and groundwater as evidenced by the presence of the LNAPL and by high concentrations of pesticides and VOCs in the soil and groundwater. This contamination may be impacting groundwater or subsurface soil within the Motor-T Area at Site 27 as groundwater flow direction in the vicinity is generally east to west between the two sites (although groundwater flow direction is generally radial outwards from the Site 55). While Sites 9 and 16 have been investigated as part of Site 27 in the past, it appears that the source of contamination is likely not originating from Sites 9 or 16, but from Site 55. As a result, sites 9 and 16 will be addressed during the investigation of Site 55, and are not a part of the current investigation.

The groundwater contamination at Site 27 that has currently been identified is in the dissolved phase. Identified contaminants that exceed regulatory screening criteria include chlorobenzene, gamma BHC (lindane), and benzene. Soil contamination at Site 27 is primarily located in the surface soil interval of 0-1 foot bgs. Soil contaminant concentrations that exceed regulatory criteria include metals, pesticides and SVOCs. Currently, LANPL in groundwater has not been identified at Site 27, however, there is a localized “hot spot” of DDT present in the subsurface at the 5-6 foot bgs interval in the south west corner of the Site. Because there are no contaminant concentrations above regulatory criteria in the surface soil

at the same location, the presence of this contamination is likely the result of migrating contaminants in the dissolved phase groundwater plume.

10.3.2 Contaminant Migration Pathways

In the case of Site 55 where fuel and pesticides were mixed together for application purposes and the source is unidentified, one possibility is that the fuel oil is acting as a solvent and transporting the dissolved pesticides through surface and subsurface soil allowing them to eventually reach the water table. Once the contaminants have reached groundwater, the dissolved pesticides and contaminants may migrate through groundwater. Figure 10-6 is a geologic cross section across Sites 27 and 55. There is a clay layer located approximately 6-8 feet bgs which acts as a semi-confining unit that was indentified during previous investigations which involved the installation of soil borings and groundwater wells (see Figure 10-6). The clay layer is located just above the water table and while the water table is typically found at a depth just below the previously mentioned clay layer, some groundwater perches on top of the clay as well (see Figure 10-6). It is possible that as the water table fluctuates, a LNAPL smear zone has been established in the clay layer and that LNAPL may be present in the saturated zone beneath the clay layer. Currently, there is uncertainty related to the extent of the potential smear zone and the potential presence of LNAPL at Site 27.

There is data to support the migration of the dissolved phase of the plume, which contains chlorobenzene as the primary contaminant. This dissolved phase plume was likely caused by the leaching of contaminants from soil during precipitation events. Data will be collected during this investigation to determine if shallow soil contamination remains that could continue to leach contamination to groundwater.

While risk assessment will be conducted as a primary objective of this investigation, an investigation into the potential presence of LNAPL in the form of Principal Threat Waste (PTW) will also be performed. This will involve gathering soil data from a subsurface interval that is deeper than the subsurface interval to which a typical construction worker would be exposed. This data will be used to complete characterization of the site and provide information that will be useful during a potential Non-Time Critical Removal Action to address contamination at Site 55.

10.3.3 Human Health and Ecological Receptors and Exposure Pathways

Soil data within the Motor-T area indicate the presence of pesticides above human health screening criteria in one particular area (Figure 10-3). Because of the planned construction activities within the Motor-T Area, human health risks to maintenance workers, industrial workers, construction workers, future construction workers, future industrial workers, and hypothetical future residents will be evaluated.

Human Health Risk Assessment Methodology is present in Appendix C. Exposure routes to be evaluated in the risk assessment include contaminants in surface soil via dermal contact, incidental ingestion, and inhalation of dust and vapors. Construction workers and future hypothetical residents may be also exposed to contaminants in the groundwater via ingestion, dermal contact, and inhalation of vapors. Future maintenance workers and future industrial workers may be exposed to contaminants in the groundwater via inhalation of vapors.

Soil data within the Site 55 (fiber optic vault) area indicates the presence of pesticides above human health screening criteria. Groundwater contamination within the Site 55 area indicates the presence of VOC and pesticides well above MCLs, and as a localized floating LNAPL layer. In order to address the potential for Site 55 to act as a continuing source of contamination to Site 27, refined delineation is necessary to support an EE/CA and a NTCRA at Site 55 and potential response actions at Site 27. It is expected that Site 55 will be investigated concurrently with Site 27, the Site 55 investigation is presented in another UFP-SAP. This was based on an MCRD Parris Island Partnering Team decision. Ecological receptors (small mammals and birds) may be exposed to contaminants in surface soil via direct contact with soil and ingestion of contaminated food items. However, exposure of small mammals and birds to the contaminants in the surface soil is severely limited by the lack of viable habitat in the Site 27 and Site 55 areas and will not be evaluated as part of this investigation. If it is found that contaminated groundwater has reached the marsh area and is surfacing or discharging to surface waters, an ecological risk assessment may be necessary.

SAP Worksheet #11: Data Quality Objectives: Site 27

(UFP-QAPP Manual Section 2.6.1)

11.1 PROBLEM STATEMENT

MCRD Parris Island plans to relocate the Motor-T Area which will include building a garage and other related buildings in the area currently recognized as the Site 27 Equipment Parade Deck (re-named the Motor-T Area). Preliminary evaluation of the historic data and the Phase I and Phase II RI data indicates that contact with surface soil, subsurface soil, and groundwater in the Site 27 area may present unacceptable risks to human receptors. Because contaminated soil and groundwater from the Site 55 FOV Area may extend under the proposed Motor-T Area, additional soil and groundwater data are needed to determine if Principal Threat Waste is present in the form of LNAPL within Site 27, to characterize contamination within a potential clay layer smear zone, and to determine if there are unacceptable risks to construction workers, current maintenance workers, future industrial workers, or hypothetical future residents from exposure to environmental media in this area. Additionally, a Non-Time Critical Removal Action (NTCRA) will most likely be conducted in the near future to address the LNAPL and heavily contaminated soil in the vicinity of the FOV at Site 55, therefore, the LNAPL plume must be delineated and the extent of contaminated soil and groundwater must be defined. In order to reach this objective, more recent groundwater data with additional analytical fractions must also be collected during this investigation to establish baseline groundwater conditions at Site 27 and 55.

11.2 INFORMATION INPUTS

1. Previously Collected Data: Phase I and II RI Data collected in 2007 and 2008 will be used for risk assessment and site characterization purposes.

2. Surface and Subsurface Soil Field Screening: Several methods and field test kits will be used for characterization and delineation of contaminants and for selecting samples for laboratory analysis. These include the use of a PID for hydrocarbon vapor detection, color changing Oil-In-Soil™ for the presence/absence of LNAPL in subsurface soil, PetroFlag TPH test kits for measuring TPH concentrations in surface and subsurface soil, EnviroGuard DDT Field Test Kits for delineation of DDT or other chlorinated hydrocarbons such as chlorobenzene in surface and subsurface soil (Strategic Diagnostics, Inc), and FLUTe test kits for the presence of NAPL in the pore fluids of the soil core. The field screening methods will be applied according to the manufacturer's instructions presented in Appendix B. This data is not considered definitive and any decision making will be made with laboratory analytical results.

3. Field investigation parameters: Water table level, groundwater dissolved oxygen, conductivity, pH, temperature, turbidity, and oxidation-reduction potential. These data will assist with site characterization and, when combined with chemical soil and groundwater data, will assist with understanding the nature and extent of site contamination. These groundwater measurements will be used to determine when groundwater samples are representative of the groundwater being investigated.

4. Chemical Data: Groundwater (VOCs, SVOCs, PAHs, PCBs, Pesticides, and TAL Metals) and soil (TCL VOCs, SVOCs, PAHs, PCBs, Pesticides, and TAL Metals) chemical analytical results will be used for decision making purposes. The list of all chemical analytes is presented in Worksheet 15. The sampling methods are presented in Worksheet 18 and the analytical methods are presented in Worksheet 19. The selected analyte groups presented are those that are likely to be associated with historic site activities and the CSM.

5. Project Action Limits (PALs): A comprehensive listing of the relevant environmental and medium-specific risk-based screening levels and regulatory criteria for this investigation will be used as PALs during this investigation.

   During the field investigation, step out soil samples will be collected based on field screening and field test kit measurements. . Positive detection from the PID, any color change of the Oil-In-Soil, or a positive result for TPH from the PetroFlag test kit (which has a detection range of 10-50,000 ppm) or the DDT Enviroguard test kit (method detection limit of 0.2 ppm), will result in collection of a step out sample as described in Worksheet 17.

   To meet project objectives the selected laboratory must be able to achieve Limit of Quantiation (LOQs) that are low enough to measure constituent concentrations at less than the PALs. In some cases, this will not be achievable. The rationale for allowing these deviations is described in the footnotes to Worksheet No. 15. The Project Team will accept the laboratory analytical results when the PAL is greater than the LOQ. Also, in cases where the PAL is between the Limit of Detection (LOD) and the LOQ, the Project Team will accept analytical results below the LOQ as long as the results are “J” qualified. When the PAL is less than the Detection Limit (DL) for a particular analyte or analytes, an evaluation of detection limits and the impact on data usability will be discussed in the uncertainty section of the risk assessment.

6. Motor-T Area 100% design layout: With the design layout now ‘locked’, the Team can ensure that the correct data is collected to support protectiveness decisions based on the facility footprint and layout.

11.3 STUDY AREA BOUNDARIES

The horizontal boundary for the Motor-T Area Investigation is presented in Figure 10-2. The horizontal boundary is intended to be representative of a receptor's exposure across the entire Exposure Unit (EU).

Data collected from the surface soil 0-1 foot bgs interval and the subsurface soil 3-5 feet bgs interval represent the populations of soil to which a construction worker, maintenance worker or future industrial worker may be exposed. Data collected from the subsurface soil interval that is in the saturated zone into the water table is representative of any "smear zone" contamination that is potentially present in the clay layer as a result of the presence of LNAPL. These intervals define the vertical boundary for the soil investigation.

The vertical boundary for the shallow groundwater investigation is defined by the depth of the water table, which varies, but is typically 5 to 8 feet bgs. The vertical boundary for the intermediate groundwater investigation is approximately 18 feet bgs.

11.4 ANALYTIC APPROACH

Decision rules for characterization, delineation and risk assessment within Site 27 are provided below.

Characterization Decision Rule:

Groundwater and soil data will be collected such that the presence of Principal Threat Waste (PTW) in the form of LNAPL is identified. If PTW is identified within the Site 27 boundary, then the team will consider what type of response action is appropriate for the Site, which will likely occur simultaneously with any required response action at Site 55. If PTW is not identified in the Site 27 boundary, then no immediate response action will be necessary as a result of the presence of PTW prior to construction of the Motor-T Area.

Delineation Decision Rule:

Field screening methods will be used for initial vertical and horizontal delineation of contamination in soil at the Site. Previously collected data that defines the horizontal extent of soil contamination has been presented to the Partnering Team. However, the horizontal and vertical extent of a hot spot located in the southeast corner of the site is currently undefined and vertical delineation of the majority of subsurface soil is undefined (into the saturated zone just below the semi-confined water table). Initially, field screening methods will be used to complete vertical and horizontal delineation of contamination in soil at the Site. Once the perimeter of the hot spot and the vertical extent of subsurface contamination are

defined with field screening methods, samples will also be collected and sent to the laboratory for analysis. This laboratory analytical data will be used for decision making.

> Collect data to define the horizontal and vertical extent of soil contamination at the site. If delineation is not complete, continue to step out and continue with field screening methods until delineation is complete. Once delineation is complete, additional data collection is not required.

Currently, additional data is required to complete delineation of the dissolved phase contaminants and the LNAPL plume originating in Site 55. The Partnering Team has agreed to install two new well clusters including a shallow and intermediate well (see Figure 17.1).

> Collect data to delineate the extent of the dissolved phase contaminants and the LNAPL plume within Site 27. If LNAPL is present or dissolved phase contamination is present in perimeter wells, then continue to collect data until delineation is complete. If LNAPL is not present in any of the newly installed wells and/or dissolved phase contaminants are not present in any of the perimeter wells , then no more data collection for delineation within Site 27 is necessary.

Risk Assessment Decision Rule:

The risk assessment steps include selecting COPCs and then assessing the risks.

> For each chemical in each investigated medium, if the maximum measured chemical concentration exceeds its human health screening value for a particular environmental medium, and for that particular exposure scenario, classify the chemical as a COPC for that medium and risk type, otherwise, that chemical will be excluded from further consideration.

> If any COPCs are selected, the site risk assessor will evaluate the preliminary human health risks, as applicable (the 95% UCL will be used for exposure point concentrations in the risk assessment). If any human health risk is unacceptable, the Project Team will decide how to protect construction workers during construction of the Motor-T Area. This may include conducting an immediate response action to remove contaminated soil from the area, or preventing access to the contaminated areas. Risk to future industrial workers and hypothetical residents will also be evaluated and presented in the Baseline Risk Assessment that will be included in the Site 27 Remedial Investigation Report. If there is no unacceptable risk to human receptors at the site, then construction will proceed as planned.

11.5 MEASUREMENT AND PERFORMANCE CRITERIA

Because the biased sampling locations were strategically selected to represent areas of the site that have not yet been investigated, to delineate the DDT hot spot, to identify the potential presence of PTW and to complete characterization of Site 27, probability limits for false positive and false negative decision errors were not established. Simple comparisons of measured concentrations to action levels are being used for delineation and characterization purposes. The risk assessment methodology is presented in Appendix C. The project team will use the measured results to determine whether the amount and type of data collected are sufficient to support the attainment of the project objectives. This will involve an evaluation of contaminant concentrations and an evaluation of uncertainty for contaminants that have action levels which are less than the DLs to ensure that contaminants are likely to have been detected if present. If all data have been collected as planned and no data points are missing or rejected for quality reasons, the sampling event completeness will be considered satisfactory. If any data gaps are identified, including missing or rejected data, the project team will assess whether a claim of having obtained project objectives is reasonable. This assessment will depend on the number and type of identified data gaps; therefore, a more detailed strategy cannot be presented. All stakeholders will be involved in rendering the final conclusion regarding adequacy of the data.

11.6 DATA COLLECTION PLAN

The sample design and rationale is presented in Worksheet No. 17.

SAP Worksheet #12 -- Measurement Performance Criteria Table – All Matrices

(UFP-QAPP Manual Section 2.6.2)

Measurement Performance Criteria Table – Field QC Samples

QC Sample	Analytical Group	Frequency	Data Quality Indicators (DQIs)	Measurement Performance Criteria (MPC)	QC Sample Assesses Error for Sampling (S), Analytical (A) or both (S&A)
Equipment Rinsate Blanks	All Fractions	One per 20 field samples per matrix per sampling equipment[1].	Accuracy/Bias/ Contamination	No analytes ≥ ½ LOQ, except common lab contaminants, which must be < LOQ.	S&A
Trip Blanks	VOCs	One per cooler containing VOC samples.	Accuracy/Bias/ Contamination	No analytes ≥ ½ LOQ, except common lab contaminants, which must be < LOQ.	S&A
Field Duplicate	All Fractions	One per 10 field samples collected.	Precision	Values > 5X LOQ: Relative Percent Difference (RPD) ≤30%[2,] (aqueous); ≤ 50%[2,3] (solid).	S
Cooler Temperature Indicator	All Fractions	One per cooler.	Representativeness	Temperature between 2 and 6 degrees Celsius (4 ± 2 °C).	S

1 – Equipment rinsate blanks will be collected if non-dedicated submersible pumps or other equipment are used.
2 – If duplicate values for non-metals are < 5x LOQ, the absolute difference should be < 2x LOQ.
3 – If duplicate values for metals are < 5x LOQ, the absolute difference should be < 4x LOQ.

SAP Worksheet #13 -- Secondary Data Criteria and Limitations Table

(UFP-QAPP Manual Section 2.7)

Secondary Data	Data Source (originating organization, report title and date)	Data Generator(s) (originating organization, data types, data generation / collection dates)	How Data Will Be Used	Limitations on Data Use
Historical Data	Tetra Tech, July 2002. Draft Site Inspection/Confirmatory Sampling Report for Site/SWMU 4, Site/SWMU 5, Site/SWMU 7, Site 9/SWMU 8, Site 13C/SWMU 13, Site/SWMU 16, SWMU 27 and SWMU 35, MCRD Parris Island.	NAVFAC SE	Background information was used in planning of the sampling effort.	None, the data were fully validated.
Historical Data	Tetra Tech, August 2004. Preliminary Assessment/Site Inspection and Confirmatory Sampling Report for Site/SWMU 55, Fiber Optic Vault, MCRD Parris Island.	NAVFAC SE	Background information was used in planning of the sampling effort.	None, the data were fully validated.
Historical Data	Tetra Tech, June 2009. Conceptual Site Model, Site 27, Equipment Parade Deck, MCRD Parris Island, South Carolina.	NAVFAC SE	Background information was used in planning of the sampling effort.	None, the data were fully validated.

SAP Worksheet #14 -- Summary of Project Tasks

(UFP-QAPP Manual Section 2.8.1)

The field tasks associated with the Site 27 RI sampling are summarized below along with short descriptions of these tasks. All data recording and management procedures are described in Worksheet #29.

- Mobilization/demobilization
- Soil sampling
- Groundwater sampling
- Surveying
- Monitoring equipment calibration
- Water-level measurements
- Field decontamination procedures
- Field documentation procedures
- Waste handling
- Site restoration

Additional project activities include the following tasks:

- Analytical Tasks
- Data Management
- Data Review
- Project Reports

Mobilization/Demobilization

Mobilization will consist of the delivery of all equipment, materials, and supplies to the site, the complete assembly in satisfactory working order of all such equipment at the site, and the satisfactory storage at the site of all such materials and supplies. Tetra Tech will coordinate with the base to identify locations for the storage of equipment and supplies.

Site-specific health and safety training for all Tetra Tech field staff and subcontractors will be provided as part of the mobilization activities. Health and safety requirements such as daily tailgate meetings are described in detail in the site-specific Tetra Tech HASP.

Demobilization will consist of the prompt and timely removal of all equipment, materials, and supplies from the site following completion of the work.

Soil Sampling

Soil samples will be collected in the Motor-T Area for site characterization of the proposed construction area. After sampling, each borehole will be backfilled to within 6 inches of grade using the soil cuttings removed from the borehole. A minimum 6-inch thick grout/bentonite seal will then be placed to grade at each boring. The holes in any paved surface will be backfilled and patched with ready-mix concrete.

A Geoprobe subcontractor will advance the proposed soil borings to an estimated total depth of 8 feet bgs (the water table averages about 7 feet bgs) using direct push technology (DPT). MacrocoreTM (or approved equal) soil sampling will proceed continuously from the land surface to the total depth of each boring. The Geoprobe subcontractor will provide appropriately sized plastic sleeves capable of containerizing each 4-foot interval. Sampling will be in accordance with SOP SA-2.5 and SOP SA-1.3 (Appendix D).

Field based soil sampling methodology including a PID and Oil-In-Soil™ for the identification of LNAPL in soil, PetroFlag TPH test kits for measuring TPH concentrations in soil, EnviroGuard DDT Field Test Kits for delineation of DDT in soil (Strategic Diagnostics, Inc), and FLUTe test kits for the presence of NAPL in the pore fluids of the soil core will be used for delineation purposes as described in more detail in Worksheet 17. DDT hotspot and LNAPL smear zone confirmation samples as well as additional sampling locations throughout the Motor-T Area will be placed in sample jars, labeled, and placed immediately in an iced cooler for shipment to a fixed based laboratory. These soil samples will be analyzed for TCL VOCs, SVOCs, PAHs, pesticides, PCBs, TAL metals, pH and Total Organic Carbon (TOC).

A soil boring log will be prepared for each boring with soil descriptions and all relevant information, observations, depth to saturated soils/water table, and PID field screening results as per SOP SA-6.3 (Appendix D). Sample depths will be included on each log.

Temporary Well Installation

Two temporary well clusters will be installed for this investigation on the western and eastern side of sample location PAI-27-SO28. Temporary wells will be installed via SOP GH-2.8 (Groundwater Monitoring Well Installation) (Appendix D) at shallow (water table) in which the screens intersect the semi-confining clay layer and intermediate (just above the second clay layer or approximately 20-25 ft bgs) depths.

Groundwater Sampling

Groundwater samples will be collected from existing monitoring wells and the two temporary well clusters via SOP SA-1.1 (Groundwater Sample Acquisition and Onsite Water Quality Testing) (Appendix D) and analyzed for TCL VOCs, SVOCs, PAHs, PCBs, TAL metals (total and dissolved), TOC, Total Dissolved Solids (TDS), and alkalinity. All monitoring wells will be checked for LNAPL prior to purging, or groundwater sampling.

Surveying

The locations and elevations of all newly installed soil borings will be surveyed. The North American Datum (NAD) 1983 will be used as the horizontal datum. Sample locations will be surveyed to the nearest 0.10 foot. Vertical elevations will be referenced to 1988 National Geodetic Vertical Datum (NGVD).

Monitoring Equipment Calibration

Monitoring equipment calibration procedures are described in Worksheet #22.

Water-Level Measurements

A round of water-level measurements will be collected from all permanent monitoring wells before the groundwater samples are collected as per SOP GH-1.2 (Evaluation of Existing Monitoring Wells and Water Level Measurements) (Appendix D). . All monitoring wells will be checked for LNAPL prior to water level measurements.

Field Decontamination Procedures

Decontamination of major equipment and sampling equipment will be in accordance with the Master FSP (B&R Environmental, 1998) and SOP SA-7.1 (Decontamination of Field Equipment and Waste Handling) (Appendix D). An area for the decontamination pad and a source of potable water for steam washing will be arranged by the FOL through MCRD personnel.

Field Documentation Procedures

Field documentation will be performed in accordance with SOP SA-6.3 presented in Appendix D.

A summary of all field activities will be properly recorded in a bound logbook with consecutively numbered pages that cannot be removed. Logbooks will be assigned to field personnel and will be stored in a secured area when not in use.

At a minimum, the following information will be recorded in the site logbook:

- Name of the person to whom the logbook is assigned.
- Project name.
- Project start date.
- Names and responsibilities of on-site project personnel including subcontractor personnel.
- Arrival/departure time of site visitors.
- Arrival/departure time of equipment.
- Sampling activities and sample log sheet references.
- Descriptions of subcontractor activities.
- Sample pick-up information including chain of custody numbers, air bill numbers, carriers, times, and dates.
- Descriptions of borehole or monitoring well installation activities and operations.
- Health and safety issues.
- Descriptions of photographs including date, time, photographer, roll and picture number, location, and compass direction of photograph.

All entries will be written in ink, and no erasures will be made. If an incorrect entry is made, striking a single line through the incorrect information will make the correction; the person making the correction will initial and date the change.

Waste Handling

All solid and liquid wastes generated as a result of this investigation will be handled in accordance with the procedures described in Section 2.11 of the Master FSP (B&R Environmental, 1998) and SOP SA-7.1 (Decontamination of Field Equipment and Waste Handling) (Appendix D).

Soil cuttings will be placed in drums, and these cuttings will be tested and then disposed off site. Purge water and decontamination water will be collected in drums, and based on test results, the water will be either discharged to the sanitary sewer or taken off site for disposal.

Personal protective equipment (gloves, wipes, discarded paper towels, etc.) will be properly discarded on-base in a solid waste dumpster.

Site Restoration

If investigation activities such as soil sampling disturb or alter the landscape, vegetation, or other features of the sites, site surfaces may require restoration to re-establish conditions existing prior to the investigation. If vegetation is stressed or damaged as a result of investigation activities, the affected area will be reseeded. Asphalt and concrete patching will occur in Motor-T Area or if locations are drilled in sidewalks or roadways. Additionally, all equipment used during the investigation and all investigation-derived waste (IDW) will be removed from the site.

Analytical Tasks

CompuChem is a current Department of Defense Environmental Laboratory Accreditation Program (DoD ELAP) accredited laboratory, however they are lacking accreditation for a few target compounds (Worksheet 15 provides details). A copy of the laboratory accreditation for CompuChem can be found in Appendix E. Analyses will be performed in accordance with the analytical methods identified in Worksheet #19. CompuChem is expected to meet the PALs to the extent identified in Worksheet #15. CompuChem will perform chemical analysis following laboratory-specific SOPs (Worksheets #19 and #23) developed based on the analytical methods listed in Worksheets #19 and #30. Copies of the Laboratory SOPs are included in Appendix F. All results will be reported by the laboratory on a dry-weight basis. Results of percent moisture will be reported in each analytical data package and electronic data files. This information will also be captured in the project database which will eventually be uploaded to NIRIS. Percent moisture information will also be captured in the RI report.

CompuChem has applied for accreditation of these analytes. Tetra Tech will confirm that Compuchem has received accreditation prior to sample shipment.

Analytical data packages will be provided in an EPA contract laboratory program like data package.

Data Management

Data Handling and Management - After the field investigation is completed, the field sampling log sheets will be organized by date and media and filed in the project files. The field logbooks for this project will be used only for these sites, and will also be categorized and maintained in the project files after the completion of the field program. Project personnel completing concurrent field sampling activities may maintain multiple field logbooks. When possible, logbooks will be segregated by sampling activity. The field logbooks will be titled based on date and activity. The data handling procedures to be followed by the laboratories will meet the requirements of the technical specification. The electronic data results will be automatically downloaded into the Tetra Tech database in accordance with proprietary Tetra Tech processes.

Data Tracking and Control. The Tetra Tech PM (or designee) is responsible for the overall tracking and control of data generated for the project.

- Data Tracking: Data is tracked from its generation to its archiving in the Tetra Tech project-specific files. The Tetra Tech Project Chemist (or designee) is responsible for tracking the samples collected and shipped to the subcontracted laboratory. Upon receipt of the data packages from the analytical laboratory, the Tetra Tech Project Chemist will oversee the data validation effort, which includes verifying that the data packages are complete and results for all samples have been delivered by the analytical laboratory.

- Data Storage, Archiving, and Retrieval: The data packages received from the subcontracted laboratory are tracked in the data validation logbook. After the data are validated, the data packages are entered into the Tetra Tech CLEAN file system and archived in secure files. The field records including field logbooks, sample logs, chain-of-custody records, and field calibration logs will be submitted by the Tetra Tech FOL to be entered into the CLEAN file system prior to archiving in secure project files. The project files are audited for accuracy and completeness. At the completion of the Navy contract the records will be stored by Tetra Tech and eventually handed over to NAVFAC.

- Data Security: The Tetra Tech project files are restricted to designated personnel only. Records can only be borrowed temporarily from the project file using a sign-out system. The Tetra Tech Data Manager maintains the electronic data files. Access to the data files is restricted to qualified personnel only. File and data backup procedures are routinely performed.

Assessment and Oversight – Refer to Worksheet #32 for assessment findings and corrective actions and Worksheet #33 for QA management reports.

Data Review

Data verification is described in Worksheet #34. Data validation is described in Worksheets #35 and #36. Usability assessment is described in Worksheet #37.

Project Reports

An RI report will be prepared summarizing the results of all field activities and presenting all information collected. report will be provided to the PI Team for review. After incorporation of PI Team comments, a final RI report will be prepared and submitted.

SAP Worksheet #15 -- Reference Limits and Evaluation Table

(UFP-QAPP Manual Section 2.8.1)
Matrix: Soil
Analytical: VOCs

Analyte	Chemical Abstract Service (CAS) Number	Project Action Limit (PAL) (mg/kg)	PAL Reference	Practical Quantitation Limit Goal (PQLGs) (mg/kg)	LOQ (mg/kg)	LOD (mg/kg)	DL (mg/kg)
1,1-DICHLOROETHANE	**75-34-3**	**0.00069**	**RSL-Soil to GW**	**0.0002**	**0.005**	**0.001**	**0.00047**
1,1,1-TRICHLOROETHANE	71-55-6	3.2	RSL-Soil to GW	1	0.005	0.001	0.0005
1,1,2-TRICHLOROETHANE	**79-00-5**	**0.000078**	**RSL-Soil to GW**	**0.00003**	**0.005**	**0.0025**	**0.00072**
1,1,2,2-TETRACHLOROETHANE	**79-34-5**	**0.000026**	**RSL-Soil to GW**	**0.000009**	**0.005**	**0.001**	**0.00037**
1,1,2-TRICHLOROTRIFLUOROETHANE	76-13-1	150	RSL-Soil to GW	50	0.005	0.001	0.00051
1,1-DICHLOROETHENE	75-35-4	0.12	RSL-Soil to GW	0.04	0.005	0.001	0.0011
1,2-DICHLOROBENZENE	95-50-1	0.36	RSL-Soil to GW	0.1	0.005	0.001	0.00036
1,2-DICHLOROETHANE	**107-06-2**	**0.000042**	**RSL-Soil to GW**	**0.00001**	**0.005**	**0.001**	**0.00027**
1,2,3-TRICHLOROBENZENE	87-61-6	0.087	RSL-Soil to GW	0.03	0.005	0.00025	0.00012
1,2,4-TRICHLOROBENZENE	120-82-1	0.0068	RSL-Soil to GW	0.002	0.005	0.001	0.00035
1,2-DIBROMO-3-CHLOROPROPANE	**96-12-8**	**0.00000014**	**RSL-Soil to GW**	**0.00000005**	**0.005**	**0.0025**	**0.00065**
1,2-DIBROMOETHANE	**106-93-4**	**0.0000018**	**RSL-Soil to GW**	**0.0000006**	**0.005**	**0.00025**	**0.00022**
1,2-DICHLOROPROPANE	**78-87-5**	**0.00013**	**RSL-Soil to GW**	**0.00004**	**0.005**	**0.0025**	**0.00063**
1,3-DICHLOROBENZENE	541-73-1	NC	RSL-Soil to GW	NC	0.005	0.001	0.00035
1,4-DICHLOROBENZENE	**106-46-7**	**0.00041**	**RSL-Soil to GW**	**0.0001**	**0.005**	**0.00025**	**0.00022**
1,4-DIOXANE	**123-91-1**	**0.0013**	**RSL-Soil to GW**	**0.0004**	**0.25**	**0.13**	**0.048**
2-BUTANONE	78-93-3	1.5	RSL-Soil to GW	0.5	0.013	0.0025	0.0013
2-HEXANONE	**591-78-6**	**0.011**	**RSL-Soil to GW**	**0.004**	**0.013**	**0.0025**	**0.001**
4-METHYL-2-PENTANONE	108-10-1	0.45	RSL-Soil to GW	0.2	0.013	0.0025	0.0013
ACETONE	67-64-1	4.5	RSL-Soil to GW	2	0.013	0.0063	0.005
BENZENE	**71-43-2**	**0.00021**	**RSL-Soil to GW**	**0.00007**	**0.005**	**0.001**	**0.00031**
BROMOCHLOROMETHANE	74-97-5	NC	RSL-Soil to GW	NC	0.005	0.001	0.00053
BROMODICHLOROMETHANE	**75-27-4**	**0.000032**	**RSL-Soil to GW**	**0.00001**	**0.005**	**0.001**	**0.00038**
BROMOFORM	**75-25-2**	**0.0023**	**RSL-Soil to GW**	**0.0008**	**0.005**	**0.0025**	**0.0011**
BROMOMETHANE	**74-83-9**	**0.0022**	**RSL-Soil to GW**	**0.0007**	**0.005**	**0.001**	**0.00058**
CARBON DISULFIDE	75-15-0	0.31	RSL-Soil to GW	0.1	0.005	0.0003	0.00014
CARBON TETRACHLORIDE	**56-23-5**	**0.000077**	**RSL-Soil to GW**	**0.00003**	**0.005**	**0.001**	**0.00045**
CHLOROBENZENE	108-90-7	0.062	RSL-Soil to GW	0.02	0.005	0.00025	0.00025
CHLOROETHANE	75-00-3	5.9	RSL-Soil to GW	2	0.005	0.0025	0.00071
CHLOROFORM	**67-66-3**	**0.000053**	**RSL-Soil to GW**	**0.00002**	**0.005**	**0.001**	**0.00031**
CHLOROMETHANE	74-87-3	0.049	RSL-Soil to GW	0.02	0.005	0.001	0.00032

Analyte	CAS Number	PAL (mg/kg)	PAL Reference	PQLGs (mg/kg)	LOQ (mg/kg)	LOD (mg/kg)	DL (mg/kg)
CIS-1,2-DICHLOROETHENE	156-59-2	0.11	RSL-Soil to GW	0.04	0.005	0.001	0.00042
CIS-1,3-DICHLOROPROPENE	**10061-01-5**	**0.00015**	**RSL-Soil to GW**	**0.00005**	**0.005**	**0.001**	**0.00039**
CYCLOHEXANE	110-82-7	13	RSL-Soil to GW	4	0.005	0.001	0.00031
CHLORODIBROMOMETHANE	**124-48-1**	**0.000039**	**RSL-Soil to GW**	**0.00001**	**0.005**	**0.001**	**0.00056**
DICHLORODIFLUOROMETHANE	75-71-8	0.61	RSL-Soil to GW	0.2	0.005	0.001	0.00044
ETHYLBENZENE	**100-41-4**	**0.0017**	**RSL-Soil to GW**	**0.0006**	**0.005**	**0.0025**	**0.00058**
ISOPROPYLBENZENE	98-82-8	1.1	RSL-Soil to GW	0.4	0.005	0.00025	0.00022
METHYL ACETATE	79-20-9	7.5	RSL-Soil to GW	3	0.005	0.0025	0.0014
METHYL TERT-BUTYL ETHER	**1634-04-4**	**0.0028**	**RSL-Soil to GW**	**0.0009**	**0.005**	**0.0025**	**0.00039**
METHYL CYCLOHEXANE	108-87-2	NC	RSL-Soil to GW	NC	0.005	0.001	0.00028
METHYLENE CHLORIDE	**75-09-2**	**0.0012**	**RSL-Soil to GW**	**0.0004**	**0.005**	**0.001**	**0.00049**
STYRENE	100-42-5	1.8	RSL-Soil to GW	0.6	0.005	0.00025	0.00008
TETRACHLOROETHENE	**127-18-4**	**0.000049**	**RSL-Soil to GW**	**0.00002**	**0.005**	**0.0025**	**0.0016**
TOLUENE	108-88-3	1.6	RSL-Soil to GW	0.5	0.005	0.001	0.00034
O-XYLENE	95-47-6	1.2	RSL-Soil to GW	0.4	0.005	0.001	0.00038
M+P-XYLENES	TTNUS054	NC	RSL-Soil to GW	NC	0.01	0.0005	0.00014
TRANS-1,2-DICHLOROETHENE	156-60-5	0.031	RSL-Soil to GW	0.01	0.005	0.0025	0.001
TRANS-1,3-DICHLOROPROPENE	10061-02-6	1.7	RSL-R	0.6	0.005	0.001	0.00041
TRICHLOROETHENE	**79-01-6**	**0.00072**	**RSL-Soil to GW**	**0.0002**	**0.005**	**0.001**	**0.00032**
TRICHLOROFLUOROMETHANE	75-69-4	0.83	RSL-Soil to GW	0.3	0.005	0.001	0.0003
VINYL CHLORIDE	**75-01-4**	**0.0000056**	**RSL-Soil to GW**	**0.000002**	**0.005**	**0.001**	**0.00042**

Matrix: Soil							
Analytical: SVOCs							
Analyte	**CAS Number**	**PAL (mg/kg)**	**PAL Reference**	**PQLGs (mg/kg)**	**LOQ (mg/kg)**	**LOD (mg/kg)**	**DL (mg/kg)**
1,1-BIPHENYL	92-52-4	19	RSL-Soil to GW	6	0.17	0.068	0.017
1,2,4,5-TETRACHLOROBENZENE	**95-94-3**	**0.051**	**RSL-Soil to GW**	**0.02**	**0.17**	**0.068**	**0.018**
2,2'-OXYBIS(1-CHLOROPROPANE)	**108-60-1**	**0.00012**	**RSL-Soil to GW**	**0.00004**	**0.17**	**0.068**	**0.021**
2,3,4,6-TETRACHLOROPHENOL	58-90-2	6.7	RSL-Soil to GW	2	0.33	0.068	0.03
2,4,5-TRICHLOROPHENOL	95-95-4	14	RSL-Soil to GW	5	0.33	0.068	0.028
2,4,6-TRICHLOROPHENOL	**88-06-2**	**0.023**	**RSL-Soil to GW**	**0.008**	**0.33**	**0.068**	**0.029**
2,4-DICHLOROPHENOL	**120-83-2**	**0.13**	**RSL-Soil to GW**	**0.04**	**0.33**	**0.068**	**0.02**
2,4-DIMETHYLPHENOL	105-67-9	0.86	RSL-Soil to GW	0.3	0.33	0.068	0.032
2,4-DINITROPHENOL	**51-28-5**	**0.082**	**RSL-Soil to GW**	**0.03**	**0.33**	**0.068**	**0.044**
2,4-DINITROTOLUENE	**121-14-2**	**0.00029**	**RSL-Soil to GW**	**0.0001**	**0.17**	**0.068**	**0.031**
2,6-DINITROTOLUENE	**606-20-2**	**0.05**	**RSL-Soil to GW**	**0.02**	**0.17**	**0.068**	**0.031**
2-CHLORONAPHTHALENE	91-58-7	15	RSL-Soil to GW	5	0.17	0.136	0.104
2-CHLOROPHENOL	**95-57-8**	**0.15**	**RSL-Soil to GW**	**0.05**	**0.33**	**0.068**	**0.02**
2-METHYLPHENOL	95-48-7	1.5	RSL-Soil to GW	0.5	0.33	0.068	0.023
2-NITROANILINE	**88-74-4**	**0.15**	**RSL-Soil to GW**	**0.05**	**0.33**	**0.068**	**0.031**
2-NITROPHENOL	88-75-5	NC	RSL-Soil to GW	NC	0.33	0.033	0.017
3,3'-DICHLOROBENZIDINE	**91-94-1**	**0.00098**	**RSL-Soil to GW**	**0.0003**	**0.17**	**0.068**	**0.022**
3-NITROANILINE	99-09-2	NC	RSL-Soil to GW	NC	0.33	0.068	0.021
4,6-DINITRO-2-METHYLPHENOL	**534-52-1**	**0.0062**	**RSL-Soil to GW**	**0.002**	**0.33**	**0.068**	**0.033**
4-BROMOPHENYL PHENYL ETHER	101-55-3	NC	RSL-Soil to GW	NC	0.17	0.068	0.02
4-CHLORO-3-METHYLPHENOL	59-50-7	4.3	RSL-Soil to GW	1	0.33	0.068	0.03
4-CHLOROANILINE	**106-47-8**	**0.00014**	**RSL-Soil to GW**	**0.00005**	**0.33**	**0.068**	**0.022**
4-CHLOROPHENYL PHENYL ETHER	7005-72-3	NC	RSL-Soil to GW	NC	0.17	0.068	0.029
4-METHYLPHENOL	**106-44-5**	**0.15**	**RSL-Soil to GW**	**0.05**	**0.33**	**0.068**	**0.023**
4-NITROANILINE	**100-01-6**	**0.0014**	**RSL-Soil to GW**	**0.0005**	**0.33**	**0.068**	**0.023**
4-NITROPHENOL	100-02-7	NC	RSL-Soil to GW	NC	0.33	0.068	0.032
ACETOPHENONE	98-86-2	1.1	RSL-Soil to GW	0.4	0.17	0.033	0.018
ATRAZINE	**1912-24-9**	**0.00019**	**RSL-Soil to GW**	**0.00006**	**0.17**	**0.133**	**0.047**
BENZALDEHYDE	100-52-7	0.81	RSL-Soil to GW	0.3	0.33	0.068	0.027
BIS(2-CHLOROETHOXY)METHANE	**111-91-1**	**0.025**	**RSL-Soil to GW**	**0.008**	**0.17**	**0.068**	**0.019**
BIS(2-CHLOROETHYL)ETHER	**111-44-4**	**0.000031**	**RSL-Soil to GW**	**0.00001**	**0.17**	**0.033**	**0.017**
BIS(2-ETHYLHEXYL)PHTHALATE	117-81-7	1.1	RSL-Soil to GW	0.4	0.17	0.068	0.066
BUTYL BENZYL PHTHALATE	85-68-7	0.51	RSL-Soil to GW	0.2	0.17	0.068	0.034
CAPROLACTAM	105-60-2	4.5	RSL-Soil to GW	2	0.17	0.068	0.059

Analyte	CAS Number	PAL (mg/kg)	PAL Reference	PQLGs (mg/kg)	LOQ (mg/kg)	LOD (mg/kg)	DL (mg/kg)
CARBAZOLE	86-74-8	NC	RSL-Soil to GW	NC	0.17	0.068	0.034
DIBENZOFURAN	132-64-9	0.68	RSL-Soil to GW	0.2	0.17	0.068	0.025
DIETHYL PHTHALATE	84-66-2	12	RSL-Soil to GW	4	0.17	0.068	0.026
DIMETHYL PHTHALATE	131-11-3	NC	RSL-Soil to GW	NC	0.17	0.068	0.024
DI-N-BUTYL PHTHALATE	84-74-2	9.2	RSL-Soil to GW	3	0.17	0.068	0.026
DI-N-OCTYL PHTHALATE	117-84-0	NC	RSL-Soil to GW	NC	0.17	0.068	0.034
HEXACHLOROBENZENE	**118-74-1**	**0.00053**	**RSL-Soil to GW**	**0.0002**	**0.17**	**0.068**	**0.025**
HEXACHLOROBUTADIENE	**87-68-3**	**0.0017**	**RSL-Soil to GW**	**0.0006**	**0.17**	**0.068**	**0.021**
HEXACHLOROCYCLOPENTADIENE	77-47-4	0.68	RSL-Soil to GW	0.2	0.17	0.033	0.016
HEXACHLOROETHANE	**67-72-1**	**0.0029**	**RSL-Soil to GW**	**0.001**	**0.17**	**0.068**	**0.018**
ISOPHORONE	**78-59-1**	**0.023**	**RSL-Soil to GW**	**0.008**	**0.17**	**0.068**	**0.018**
NAPHTHALENE	**91-20-3**	**0.00047**	**RSL-Soil to GW**	**0.0002**	**0.17**	**0.068**	**0.018**
NITROBENZENE	**98-95-3**	**0.000079**	**RSL-Soil to GW**	**0.00003**	**0.17**	**0.068**	**0.026**
N-NITROSODIPHENYLAMINE	**86-30-6**	**0.075**	**RSL-Soil to GW**	**0.03**	**0.17**	**0.068**	**0.03**
N-NITROSO-DI-N-PROPYLAMINE	**621-64-7**	**0.0000072**	**RSL-Soil to GW**	**0.000002**	**0.17**	**0.068**	**0.035**
PENTACHLOROPHENOL	**87-86-5**	**0.0057**	**RSL-Soil to GW**	**0.002**	**0.33**	**0.068**	**0.037**
PHENOL	108-95-2	6.3	RSL-Soil to GW	2	0.33	0.068	0.021

Acetophenone, atrazine,benzaldehyde, and caprolactam are not currently on CompuChem's DoD ELAP scope as of 05/20/10, but data have been submitted to the Accrediting Body (AB) and accreditation is pending.

Matrix: Soil							
Analytical: PAHs							
Analyte	**CAS Number**	**PAL (mg/kg)**	**PAL Reference**	**PQLGs (mg/kg)**	**LOQ (mg/kg)**	**LOD (mg/kg)**	**DL (mg/kg)**
1-METHYLNAPHTHALENE	90-12-0	0.012	RSL-Soil to GW	0.004	0.008	TBD	0.00052
2-METHYLNAPHTHALENE	91-57-6	0.75	RSL-Soil to GW	0.3	0.008	TBD	0.00068
ACENAPHTHENE	83-32-9	22	RSL-Soil to GW	7	0.008	TBD	0.0006
ACENAPHTHYLENE	208-96-8	22	RSL-Soil to GW	7	0.008	TBD	0.00053
ANTHRACENE	120-12-7	360	RSL-Soil to GW	120	0.008	TBD	0.00043
BENZO(A)ANTHRACENE	56-55-3	0.01	RSL-Soil to GW	0.003	0.008	TBD	0.00058
BENZO(A)PYRENE	**50-32-8**	**0.0035**	**RSL-Soil to GW**	**0.001**	**0.008**	**TBD**	**0.00038**
BENZO(B)FLUORANTHENE	205-99-2	0.035	RSL-Soil to GW	0.01	0.008	TBD	0.00057
BENZO(G,H,I)PERYLENE	191-24-2	120	RSL-Soil to GW	40	0.008	TBD	0.00038
BENZO(K)FLUORANTHENE	207-08-9	0.35	RSL-Soil to GW	0.1	0.008	TBD	0.00043
CHRYSENE	218-01-9	1.1	RSL-Soil to GW	0.4	0.008	TBD	0.00063
DIBENZO(A,H)ANTHRACENE	53-70-3	0.011	RSL-Soil to GW	0.004	0.008	TBD	0.00033
FLUORANTHENE	206-44-0	160	RSL-Soil to GW	53	0.008	TBD	0.0013
FLUORENE	86-73-7	27	RSL-Soil to GW	9	0.008	TBD	0.00045
INDENO(1,2,3-CD)PYRENE	193-39-5	0.12	RSL-Soil to GW	0.04	0.008	TBD	0.00037
PHENANTHRENE	85-01-8	120	RSL-Soil to GW	40	0.008	TBD	0.0013
PYRENE	129-00-0	120	RSL-Soil to GW	40	0.008	TBD	0.00057
NAPHTHALENE	**91-20-3**	**0.00047**	**RSL-Soil to GW**	**0.0002**	**0.008**	**TBD**	**0.00072**
PAH SIM is not currently on CompuChem's DoD ELAP scope as of 05/20/10, but data have been submitted to the AB and accreditation is pending.							

Matrix: Soil							
Analytical: Pesticides							
Analyte	**CAS Number**	**PAL (mg/kg)**	**PAL Reference**	**PQLGs (mg/kg)**	**LOQ (mg/kg)**	**LOD (mg/kg)**	**DL (mg/kg)**
4,4'-DDD	72-54-8	0.066	RSL-Soil to GW	0.02	0.002	0.00016	0.00008
4,4'-DDE	72-55-9	0.047	RSL-Soil to GW	0.02	0.002	0.00016	0.00007
4,4'-DDT	50-29-3	0.067	RSL-Soil to GW	0.02	0.002	0.0004	0.00025
ALDRIN	309-00-2	0.00065	RSL-Soil to GW	0.0002	0	0.0002	0.00006
ALPHA-BHC	319-84-6	0.000062	RSL-Soil to GW	0.00002	0	0.0002	0.00008
ALPHA-CHLORDANE	5103-71-9	0.013	RSL-Soil to GW	0.004	0	0.0002	0.00008
BETA-BHC	319-85-7	0.00022	RSL-Soil to GW	0.00007	0	0.0002	0.00014
DELTA-BHC	319-86-8	0.000062	RSL-Soil to GW	0.00002	0	0.0002	0.00014
DIELDRIN	**60-57-1**	**0.00017**	**RSL-Soil to GW**	**0.00006**	**0.002**	**0.00016**	**0.00005**
ENDOSULFAN I	959-98-8	3	RSL-Soil to GW	1	0	0.0002	0.00007
ENDOSULFAN II	33213-65-9	3	RSL-Soil to GW	1	0.002	0.00016	0.00008
ENDOSULFAN SULFATE	1031-07-8	3	RSL-Soil to GW	1	0.002	0.00016	0.00006
ENDRIN	72-20-8	0.44	RSL-Soil to GW	0.1	0.002	0.00016	0.00004
ENDRIN ALDEHYDE	7421-93-4	0.44	RSL-Soil to GW	0.1	0.002	0.0004	0.00013
ENDRIN KETONE	53494-70-5	0.44	RSL-Soil to GW	0.1	0.002	0.00016	0.00005
GAMMA-BHC (LINDANE)	58-89-9	0.00036	RSL-Soil to GW	0.0001	0	0.00063	0.00004
GAMMA-CHLORDANE	5103-74-2	0.013	RSL-Soil to GW	0.004	0	0.0002	0.00006
HEPTACHLOR	76-44-8	0.0012	RSL-Soil to GW	0.0004	0	0.0002	0.00012
HEPTACHLOR EPOXIDE	1024-57-3	0.00015	RSL-Soil to GW	0.00005	0	0.0002	0.00005
METHOXYCHLOR	72-43-5	9.9	RSL-Soil to GW	3	0.008	0.0033	0.00029
TOXAPHENE	**8001-35-2**	**0.0094**	**RSL-Soil to GW**	**0.003**	**0.083**	**0.033**	**0.015**

Matrix: Soil							
Analytical: PCBs							
Analyte	**CAS Number**	**PAL (mg/kg)**	**PAL Reference**	**PQLGs (mg/kg)**	**LOQ (mg/kg)**	**LOD (mg/kg)**	**DL (mg/kg)**
AROCLOR-1016	12674-11-2	0.092	RSL-Soil to GW	0.03	0.017	0.006	0.0028
AROCLOR-1221	**11104-28-2**	**0.00012**	**RSL-Soil to GW**	**0.00004**	**0.017**	**0.006**	**0.0054**
AROCLOR-1232	**11141-16-5**	**0.00012**	**RSL-Soil to GW**	**0.00004**	**0.017**	**0.006**	**0.0049**
AROCLOR-1242	**53469-21-9**	**0.0053**	**RSL-Soil to GW**	**0.002**	**0.017**	**0.004**	**0.0019**
AROCLOR-1248	**12672-29-6**	**0.0052**	**RSL-Soil to GW**	**0.002**	**0.017**	**0.003**	**0.0012**
AROCLOR-1254	**11097-69-1**	**0.0088**	**RSL-Soil to GW**	**0.003**	**0.017**	**0.004**	**0.0017**
AROCLOR-1260	11096-82-5	0.024	RSL-Soil to GW	0.008	0.017	0.006	0.0018

Matrix: Soil							
Analytical: Metals							
Analyte	**CAS Number**	**PAL (mg/kg)**	**PAL Reference**	**PQLGs (mg/kg)**	**LOQ (mg/kg)**	**LOD (mg/kg)**	**DL (mg/kg)**
ALUMINUM	7429-90-5	7700	RSL-R	2570	20	10	1.88
ANTIMONY	**7440-36-0**	**0.66**	**RSL-Soil to GW**	**0.22**	**5**	**0.5**	**0.253**
ARSENIC	**7440-38-2**	**0.0013**	**RSL-Soil to GW**	**0.00043**	**2**	**0.5**	**0.411**
BARIUM	7440-39-3	300	RSL-Soil to GW	100	20	10	0.0673
BERYLLIUM	7440-41-7	16	RSL-R	5.3	0.5	0.25	0.0293
CADMIUM	7440-43-9	1.4	RSL-Soil to GW	0.47	0.5	0.25	0.063
CALCIUM	7440-70-2	NC	RSL-Soil to GW	NC	500	250	0.348
CHROMIUM	7440-47-3	NC	RSL-Soil to GW	NC	1	0.5	0.113
COBALT	**7440-48-4**	**0.49**	**RSL-Soil to GW**	**0.16**	**2**	**0.25**	**0.236**
COPPER	7440-50-8	51	RSL-Soil to GW	17.0	0.5	0.25	0.0659
IRON	7439-89-6	640	RSL-Soil to GW	213	10	5	4.02
LEAD	7439-92-1	40	RSL-R	13.3	2	0.15	0.185
MERCURY	**7439-97-6**	**0.03**	**RSL-Soil to GW**	**0.01**	**0.033**	**0.01**	**0.007**
MAGNESIUM	7439-95-4	NC	RSL-Soil to GW	NC	500	250	0.758
MANGANESE	7439-96-5	57	RSL-Soil to GW	19.0	1	0.5	0.0148
NICKEL	7440-02-0	48	RSL-Soil to GW	16.0	1	0.25	0.106
POTASSIUM	7440-09-7	NC	RSL-Soil to GW	NC	500	250	1.86
SELENIUM	**7782-49-2**	**0.95**	**RSL-Soil to GW**	**0.32**	**1**	**0.25**	**0.222**
SILVER	7440-22-4	1.6	RSL-Soil to GW	0.53	0.5	0.25	0.035
SODIUM	7440-23-5	NC	RSL-Soil to GW	NC	500	250	16.8
THALLIUM	7440-28-0	NC	RSL-Soil to GW	NC	5	0.5	0.179
VANADIUM	7440-62-2	39	RSL-R	13.0	2	1	0.0655
ZINC	7440-66-6	680	RSL-Soil to GW	227	3	1	0.643

Matrix: Groundwater
Analytical: VOCs

Analyte	CAS Number	PAL (ug/L)	PAL Reference	PQLGs (ug/L)	LOQ (ug/L)	LOD (ug/L)	DL (ug/L)
1,1-DICHLOROETHANE	75-34-3	2.4	RSL-Tapwater	0.8	0.5	0.08	0.02
1,1,1-TRICHLOROETHANE	71-55-6	200	RSL MCL	67	0.5	0.08	0.02
1,1,2-TRICHLOROETHANE	79-00-5	5	RSL MCL	1.65	0.5	0.08	0.04
1,1,2,2-TETRACHLOROETHANE	**79-34-5**	**0.067**	**RSL-Tapwater**	**0.02**	**0.5**	**0.08**	**0.05**
1,1,2-TRICHLOROTRIFLUOROETHANE	76-13-1	150	VIGW	50	0.5	0.08	0.05
1,1-DICHLOROETHENE	75-35-4	7	RSL MCL	2	0.5	0.08	0.04
1,2-DICHLOROBENZENE	95-50-1	600	RSL MCL	198	0.5	0.08	0.03
1,2-DICHLOROETHANE	107-06-2	5	RSL MCL	1.65	0.5	0.08	0.03
1,2,3-TRICHLOROBENZENE	87-61-6	29	RSL-Tapwater	9.57	0.5	0.08	0.06
1,2,4-TRICHLOROBENZENE	120-82-1	70	RSL MCL	23.1	0.5	0.08	0.06
1,2-DIBROMO-3-CHLOROPROPANE	**96-12-8**	**0.2**	**RSL MCL**	**0.066**	**0.5**	**0.03**	**0.25**
1,2-DIBROMOETHANE	**106-93-4**	**0.05**	**RSL MCL**	**0.017**	**0.5**	**0.08**	**0.04**
1,2-DICHLOROPROPANE	78-87-5	5	RSL MCL	1.65	0.5	0.3	0.12
1,3-DICHLOROBENZENE	541-73-1	83	VIGW	28	0.5	0.08	0.04
1,4-DICHLOROBENZENE	106-46-7	75	RSL MCL	25	0.5	0.08	0.03
1,4-DIOXANE	**123-91-1**	**6.1**	**RSL-Tapwater**	**2**	**25**	**15**	**5.4**
2-BUTANONE	78-93-3	7100	RSL-Tapwater	2343	2.5	0.4	0.28
2-HEXANONE	591-78-6	47	RSL-Tapwater	15.51	2.5	1.5	0.51
4-METHYL-2-PENTANONE	108-10-1	2000	RSL-Tapwater	660	2.5	1.5	0.42
ACETONE	67-64-1	22000	RSL-Tapwater	7260	2.5	1.5	0.44
BENZENE	71-43-2	5	RSL MCL	1.65	0.5	0.08	0.03
BROMOCHLOROMETHANE	74-97-5	NC	RSL-Tapwater	NC	0.5	0.08	0.04
BROMODICHLOROMETHANE	75-27-4	80	RSL MCL	26.40	0.5	0.08	0.03
BROMOFORM	**75-25-2**	**0.0083**	**VIGW**	**0.003**	**0.5**	**0.08**	**0.03**
BROMOMETHANE	74-83-9	8.7	RSL-Tapwater	2.87	0.5	0.3	0.11
CARBON DISULFIDE	75-15-0	56	VIGW	19	0.5	0.08	0.02
CARBON TETRACHLORIDE	56-23-5	5	RSL MCL	1.65	0.5	0.08	0.03
CHLOROBENZENE	108-90-7	100	RSL MCL	33	0.5	0.08	0.02
CHLOROETHANE	75-00-3	21000	RSL-Tapwater	7000	0.5	0.3	0.2
CHLOROFORM	67-66-3	80	RSL MCL	26.4	0.5	0.08	0.03
CHLOROMETHANE	74-87-3	6.7	VIGW	2	0.5	0.3	0.11

Analyte	CAS Number	PAL (ug/L)	PAL Reference	PQLGs (ug/L)	LOQ (ug/L)	LOD (ug/L)	DL (ug/L)
CIS-1,2-DICHLOROETHENE	156-59-2	21	VIGW	7	0.5	0.08	0.03
CIS-1,3-DICHLOROPROPENE	**10061-01-5**	**0.43**	**RSL-Tapwater**	**0.1**	**0.5**	**0.08**	**0.04**
CYCLOHEXANE	110-82-7	13000	RSL-Tapwater	4300	0.5	0.08	0.02
CHLORODIBROMOMETHANE	124-48-1	80	RSL MCL	26.4	0.5	0.08	0.04
DICHLORODIFLUOROMETHANE	75-71-8	1.4	VIGW	0.5	0.5	0.08	0.03
ETHYLBENZENE	100-41-4	700	RSL MCL	231	0.5	0.08	0.04
ISOPROPYLBENZENE	98-82-8	0.84	VIGW	0.3	0.5	0.08	0.05
METHYL ACETATE	79-20-9	37000	RSL-Tapwater	12000	0.5	0.3	0.14
METHYL TERT-BUTYL ETHER	1634-04-4	12	RSL-Tapwater	4	0.5	0.08	0.03
METHYL CYCLOHEXANE	108-87-2	71	VIGW	24	0.5	0.08	0.03
METHYLENE CHLORIDE	75-09-2	5	RSL MCL	1.65	0.5	0.08	0.02
STYRENE	100-42-5	100	RSL MCL	33	0.5	0.08	0.02
TETRACHLOROETHENE	127-18-4	5	RSL MCL	1.65	0.5	0.08	0.06
TOLUENE	108-88-3	150	VIGW	50	0.5	0.08	0.03
O-XYLENE	95-47-6	1200	RSL-Tapwater	400	0.5	0.08	0.03
M+P-XYLENES	TTNUS054	10000	RSL MCL	3300	1	0.16	0.08
TRANS-1,2-DICHLOROETHENE	156-60-5	100	RSL MCL	33	0.5	0.08	0.05
TRANS-1,3-DICHLOROPROPENE	10061-02-6	NC	RSL-Tapwater	NC	0.5	0.08	0.05
TRICHLOROETHENE	79-01-6	5	RSL MCL	1.65	0.5	0.08	0.03
TRICHLOROFLUOROMETHANE	75-69-4	18	VIGW	6	0.5	0.08	0.06
VINYL CHLORIDE	75-01-4	2	RSL MCL	0.66	0.5	0.08	0.07

Matrix: Groundwater							
Analytical: SVOCs							
Analyte	**CAS Number**	**PAL (ug/L)**	**PAL Reference**	**PQLGs (ug/L)**	**LOQ (ug/L)**	**LOD (ug/L)**	**DL (ug/L)**
1,1-BIPHENYL	92-52-4	1800	RSL-Tapwater	600	5	1.5	1
1,2,4,5-TETRACHLOROBENZENE	95-94-3	11	RSL-Tapwater	3.63	10	2	0.99
2,2'-OXYBIS(1-CHLOROPROPANE)	**108-60-1**	**0.32**	**RSL-Tapwater**	**0.1**	**5**	**2**	**0.99**
2,3,4,6-TETRACHLOROPHENOL	**58-90-2**	**1100**	**RSL-Tapwater**	**363**	**TBD**	**TBD**	**TBD**
2,4,5-TRICHLOROPHENOL	95-95-4	3700	RSL-Tapwater	1221	10	1.5	1.1
2,4,6-TRICHLOROPHENOL	**88-06-2**	**6.1**	**RSL-Tapwater**	**2**	**10**	**2**	**0.74**
2,4-DICHLOROPHENOL	120-83-2	110	RSL-Tapwater	36	10	2	0.87
2,4-DIMETHYLPHENOL	105-67-9	730	RSL-Tapwater	241	10	2	0.98
2,4-DINITROPHENOL	51-28-5	73	RSL-Tapwater	24	10	6	5.1
2,4-DINITROTOLUENE	**121-14-2**	**0.22**	**RSL-Tapwater**	**0.07**	**5**	**2**	**0.84**
2,6-DINITROTOLUENE	606-20-2	37	RSL-Tapwater	12	10	2	0.89
2-CHLORONAPHTHALENE	91-58-7	2900	RSL-Tapwater	970	10	2	1.2
2-CHLOROPHENOL	95-57-8	180	RSL-Tapwater	60	10	2	0.94
2-METHYLPHENOL	95-48-7	1800	RSL-Tapwater	600	10	2	0.74
2-NITROANILINE	88-74-4	370	RSL-Tapwater	120	10	2	0.99
2-NITROPHENOL	88-75-5	NC	RSL-Tapwater	NC	10	2	0.57
3,3'-DICHLOROBENZIDINE	**91-94-1**	**0.15**	**RSL-Tapwater**	**0.05**	**5**	**2**	**0.52**
3-NITROANILINE	99-09-2	NC	RSL-Tapwater	NC	10	2	0.84
4,6-DINITRO-2-METHYLPHENOL	**534-52-1**	**2.9**	**RSL MCL**	**1**	**10**	**1.5**	**1.4**
4-BROMOPHENYL PHENYL ETHER	101-55-3	NC	RSL-Tapwater	NC	5	2	0.74
4-CHLORO-3-METHYLPHENOL	59-50-7	3700	RSL-Tapwater	1200	10	2	0.86
4-CHLOROANILINE	**106-47-8**	**0.34**	**RSL-Tapwater**	**0.1**	**10**	**2**	**1**
4-CHLOROPHENYL PHENYL ETHER	7005-72-3	NC	RSL-Tapwater	NC	5	2	1
4-METHYLPHENOL	106-44-5	180	RSL-Tapwater	60	10	2	0.83
4-NITROANILINE	**100-01-6**	**3.4**	**RSL-Tapwater**	**1**	**10**	**2**	**0.57**
4-NITROPHENOL	**100-02-7**	**NC**	**RSL-Tapwater**	**NC**	**TBD**	**TBD**	**TBD**
ACETOPHENONE	98-86-2	3700	RSL-Tapwater	1200	10	2	0.99
ATRAZINE	**1912-24-9**	**3**	**RSL MCL**	**0.99**	**5**	**1.5**	**1.4**
BENZALDEHYDE	100-52-7	3700	RSL-Tapwater	1200	5	1.5	0.94
BIS(2-CHLOROETHOXY)METHANE	111-91-1	110	RSL-Tapwater	40	5	2	0.9
BIS(2-CHLOROETHYL)ETHER	**111-44-4**	**0.012**	**RSL-Tapwater**	**0.004**	**5**	**2**	**0.97**
BIS(2-ETHYLHEXYL)PHTHALATE	117-81-7	6	RSL MCL	2	5	4	2.7
BUTYL BENZYL PHTHALATE	85-68-7	35	RSL-Tapwater	12	5	3	1.6
CAPROLACTAM	105-60-2	18000	RSL-Tapwater	5940	10	6	3

Analyte	CAS Number	PAL (ug/L)	PAL Reference	PQLGs (ug/L)	LOQ (ug/L)	LOD (ug/L)	DL (ug/L)
CARBAZOLE	86-74-8	NC	RSL-Tapwater	NC	5	2	0.58
DIBENZOFURAN	132-64-9	37	RSL-Tapwater	12.21	5	2	1.1
DIETHYL PHTHALATE	84-66-2	29000	RSL-Tapwater	9700	5	2	0.62
DIMETHYL PHTHALATE	131-11-3	NC	RSL-Tapwater	NC	5	3	0.76
DI-N-BUTYL PHTHALATE	84-74-2	370	RSL-Tapwater	120	5	3	1.5
DI-N-OCTYL PHTHALATE	117-84-0	NC	RSL-Tapwater	NC	5	3	1.6
HEXACHLOROBENZENE	**118-74-1**	**1**	**RSL MCL**	**0.33**	**5**	**2**	**0.77**
HEXACHLOROBUTADIENE	**87-68-3**	**0.33**	**VIGW**	**0.1**	**5**	**2**	**1.5**
HEXACHLOROCYCLOPENTADIENE	77-47-4	50	RSL MCL	16.5	5	2	0.76
HEXACHLOROETHANE	**67-72-1**	**3.8**	**VIGW**	**1**	**5**	**2**	**1**
ISOPHORONE	78-59-1	71	RSL-Tapwater	24	5	2	0.95
NAPHTHALENE	**91-20-3**	**0.14**	**RSL-Tapwater**	**0.05**	**5**	**2**	**1.2**
NITROBENZENE	**98-95-3**	**0.12**	**RSL-Tapwater**	**0.04**	**5**	**2**	**1.1**
N-NITROSODIPHENYLAMINE	86-30-6	14	RSL-Tapwater	5	10	2	0.55
N-NITROSO-DI-N-PROPYLAMINE	**621-64-7**	**0.0096**	**RSL-Tapwater**	**0.003**	**5**	**2**	**1.1**
PENTACHLOROPHENOL	**87-86-5**	**1**	**MCL**	**0.33**	**10**	**2**	**0.62**
PHENOL	108-95-2	1100	RSL-Tapwater	370	10	1.5	0.46

Acetophenone, atrazine, benzaldehyde, 4-nitrophenol, 2,3,4,6-Tetrachlorophenol, and caprolactam are not currently on CompuChem's DoD ELAP scope as of 05/20/10, but data have been submitted to the Accrediting Body (A

Matrix: Groundwater
Analytical: PAHs

Analyte	CAS Number	PAL (ug/L)	PAL Reference	PQLGs (ug/L)	LOQ (ug/L)	LOD (ug/L)	DL (ug/L)
1-METHYLNAPHTHALENE	90-12-0	2.3	RSL-Tapwater	0.8	0.008	TBD	0.00052
2-METHYLNAPHTHALENE	91-57-6	150	RSL-Tapwater	50	0.008	TBD	0.00068
ACENAPHTHENE	83-32-9	2200	RSL-Tapwater	730	0.008	TBD	0.0006
ACENAPHTHYLENE	208-96-8	2200	RSL-Tapwater	730	0.008	TBD	0.00053
ANTHRACENE	120-12-7	11000	RSL-Tapwater	3700	0.008	TBD	0.00043
BENZO(A)ANTHRACENE	56-55-3	0.029	RSL-Tapwater	0.01	0.008	TBD	0.00058
BENZO(A)PYRENE	50-32-8	0.2	RSL MCL	0.066	0.008	TBD	0.00038
BENZO(B)FLUORANTHENE	205-99-2	0.029	RSL-Tapwater	0.01	0.008	TBD	0.00057
BENZO(G,H,I)PERYLENE	191-24-2	1100	RSL-Tapwater	370	0.008	TBD	0.00038
BENZO(K)FLUORANTHENE	207-08-9	0.29	RSL-Tapwater	0.1	0.008	TBD	0.00043
CHRYSENE	218-01-9	2.9	RSL-Tapwater	1	0.008	TBD	0.00063
DIBENZO(A,H)ANTHRACENE	**53-70-3**	**0.0029**	**RSL-Tapwater**	**0.001**	**0.008**	**TBD**	**0.00033**
FLUORANTHENE	206-44-0	1500	RSL-Tapwater	500	0.008	TBD	0.0013
FLUORENE	86-73-7	1500	RSL-Tapwater	500	0.008	TBD	0.00045
INDENO(1,2,3-CD)PYRENE	193-39-5	0.029	RSL-Tapwater	0.01	0.008	TBD	0.00037
PHENANTHRENE	85-01-8	1100	RSL-Tapwater	370	0.008	TBD	0.0013
PYRENE	129-00-0	1100	RSL-Tapwater	370	0.008	TBD	0.00057
NAPHTHALENE	91-20-3	0.14	RSL-Tapwater	0.05	0.008	TBD	0.00072

PAH SIM is not currently on Compuchem's DoD ELAP scope as of 05/20/10 but data have been submitted to the AB and accreditation is pending.

Matrix: Groundwater							
Analytical: Pesticides							
Analyte	**CAS Number**	**PAL (ug/L)**	**PAL Reference**	**PQLGs (ug/L)**	**LOQ (ug/L)**	**LOD (ug/L)**	**DL (ug/L)**
4,4'-DDD	72-54-8	0.28	RSL-Tapwater	0.09	0.063	0.011	0.0055
4,4'-DDE	72-55-9	0.2	RSL-Tapwater	0.07	0.063	0.011	0.0039
4,4'-DDT	50-29-3	0.2	RSL-Tapwater	0.07	0.063	0.011	0.0051
ALDRIN	**309-00-2**	**0.004**	**RSL-Tapwater**	**0.001**	**0.025**	**0.0045**	**0.0027**
ALPHA-BHC	**319-84-6**	**0.011**	**RSL-Tapwater**	**0.004**	**0.025**	**0.0045**	**0.0019**
ALPHA-CHLORDANE	5103-71-9	2	RSL MCL	0.66	0.025	0.0045	0.002
BETA-BHC	319-85-7	0.037	RSL-Tapwater	0.01	0.025	0.01	0.01
DELTA-BHC	**319-86-8**	**0.011**	**RSL-Tapwater**	**0.004**	**0.025**	**0.0045**	**0.0032**
DIELDRIN	**60-57-1**	**0.0042**	**RSL-Tapwater**	**0.001**	**0.063**	**0.011**	**0.0051**
ENDOSULFAN I	959-98-8	220	RSL-Tapwater	70	0.025	0.0045	0.0043
ENDOSULFAN II	33213-65-9	220	RSL-Tapwater	70	0.063	0.011	0.0055
ENDOSULFAN SULFATE	1031-07-8	220	RSL-Tapwater	70	0.063	0.011	0.0068
ENDRIN	72-20-8	2	RSL MCL	0.4	0.063	0.011	0.0069
ENDRIN ALDEHYDE	7421-93-4	1.1	RSL-Tapwater	0.4	0.063	0.019	0.012
ENDRIN KETONE	53494-70-5	1.1	RSL-Tapwater	0.4	0.063	0.011	0.074
GAMMA-BHC (LINDANE)	58-89-9	0.2	RSL MCL	0.07	0.025	0.0045	0.0019
GAMMA-CHLORDANE	5103-74-2	2	RSL MCL	0.66	0.025	0.0045	0.0021
HEPTACHLOR	76-44-8	0.4	RSL MCL	0.13	0.025	0.0045	0.0024
HEPTACHLOR EPOXIDE	1024-57-3	0.2	RSL MCL	0.07	0.025	0.0045	0.0028
METHOXYCHLOR	72-43-5	40	RSL MCL	13.2	0.25	0.025	0.015
TOXAPHENE	8001-35-2	3	RSL MCL	0.99	2.5	1	0.48

Matrix: Groundwater							
Analytical: PCBs							
Analyte	**CAS Number**	**PAL (ug/L)**	**PAL Reference**	**PQLGs (ug/L)**	**LOQ (ug/L)**	**LOD (ug/L)**	**DL (ug/L)**
AROCLOR-1016*	12674-11-2	0.96	RSL-Tapwater	0.3168	0.5	0.15	0.073
AROCLOR-1221*	**11104-28-2**	**0.0068**	**RSL-Tapwater**	**0.002**	**0.5**	**0.15**	**0.05**
AROCLOR-1232*	**11141-16-5**	**0.0068**	**RSL-Tapwater**	**0.002**	**0.5**	**0.16**	**0.064**
AROCLOR-1242*	**53469-21-9**	**0.034**	**RSL-Tapwater**	**0.01**	**0.5**	**0.16**	**0.065**
AROCLOR-1248*	**12672-29-6**	**0.034**	**RSL-Tapwater**	**0.01**	**0.5**	**0.16**	**0.14**
AROCLOR-1254*	**11097-69-1**	**0.034**	**RSL-Tapwater**	**0.01**	**0.5**	**0.16**	**0.044**
AROCLOR-1260*	**11096-82-5**	**0.034**	**RSL-Tapwater**	**0.01**	**0.5**	**0.16**	**0.072**

* = Although the quantitation limits for the above aroclors are greater than the Tap Water RSLs, the analytical results will still be compared to these values for risk assessment purposes. For delineation of PCB groundwater contamination, the MCL for Total PCBs (0.5 µg/L) will be used.

Matrix: Groundwater
Analytical: Metals

Analyte	CAS Number	PAL (ug/L)	PAL Reference	PQLGs (ug/L)	LOQ (ug/L)	LOD (ug/L)	DL (ug/L)
ALUMINUM	7429-90-5	200	Secondary MCL	66	200	100	31
ANTIMONY	**7440-36-0**	**6**	**RSL MCL**	**2**	**30**	**5**	**1.97**
ARSENIC	7440-38-2	10	RSL MCL	3.3	10	5	2.44
BARIUM	7440-39-3	2000	RSL MCL	660	200	100	15.2
BERYLLIUM	**7440-41-7**	**4**	**RSL MCL**	**1.3**	**5**	**2.5**	**0.723**
CADMIUM	7440-43-9	5	RSL MCL	0.6	5	2.5	0.635
CALCIUM	7440-70-2	NC	RSL-Tapwater	NC	5000	2500	122
CHROMIUM	7440-47-3	100	RSL MCL	33.3	10	5	0.75
COBALT	**7440-48-4**	**11**	**RSL-Tapwater**	**0.37**	**20**	**2.5**	**1.45**
COPPER	7440-50-8	1300	RSL MCL	429	5	2.5	1
IRON	7439-89-6	26000	RSL-Tapwater	8670	500	50	12.2
LEAD	7439-92-1	15	RSL MCL	5.0	10	1.5	1.6
MERCURY	7439-97-6	2	RSL MCL	0.67	0.2	0.18	0.091
MAGNESIUM	7439-95-4	NC	RSL-Tapwater	NC	5000	2500	7.73
MANGANESE	7439-96-5	50	Secondary MCL	16.5	10	5	0.164
NICKEL	7440-02-0	730	RSL-Tapwater	243	10	2.5	0.627
POTASSIUM	7440-09-7	NC	RSL-Tapwater	NC	5000	2500	30.9
SELENIUM	7782-49-2	50	RSL-Tapwater	16.5	10	2.5	2.01
SILVER	7440-22-4	180	RSL-Tapwater	60	5	2.5	0.637
SODIUM	7440-23-5	NC	RSL-Tapwater	NC	5000	2500	156
THALLIUM	**7440-28-0**	**2**	**RSL MCL**	**0.67**	**30**	**5**	**2.92**
VANADIUM	**7440-62-2**	**2.6**	**RSL-Tapwater**	**0.9**	**20**	**10**	**1.5**
ZINC	7440-66-6	11000	RSL-Tapwater	3630	30	10	4.17

RSL-R = USEPA Regions 3, 6, and 9 Regional Screening Level (RSL), Direct Contact Residential (5/2010)
RSL-Soil to GW = USEPA Regions 3, 6, and 9 Migration to Groundwater Soil Screening Level (5/2010)
RSL MCL=USEPA Regions 3, 6, and 9 Regional Screening Level (RSL), MCL(5/2010)
RSL-Tapwater= USEPA Regions 3, 6, and 9 Regional Screening Level (RSL), Tapwater (5/2010)
VIGW=USEPA Draft Guidance for Evaluating the Vapor Intrusion into Indoor Air. Office of Solid Waste and Emergency Response. EPA 530-F-02-052. (11/2002)
NC = No Criteria
Bolded = Bolded compounds indicate PAL values which are less than the laboratory LOQ. However, the LOD is sufficiently low to meet the PAL and for the intended data use.

Bolded and Shaded = Bolded and shaded compounds have LOQs and LODs that do not meet the PAL. These compounds are being monitored only in an effort to ensure that unexpected conditions are not present at the site. Any uncertainties introduced by LOQs or LODs that are greater than PALs will be described in the RI report.

The DL is presented for completeness.

SAP Worksheet #16 -- Project Schedule/Timeline Table (optional format)

(UFP-QAPP Manual Section 2.8.2)

Matrix: Soil
Analytical: SVOCs

Activities	Organization	Dates (MM/DD/YY)		Deliverable	Deliverable Due Date
		Anticipated Date(s) of Initiation	Anticipated Date of Completion		
Prepare Draft UFP-SAP	Tetra Tech	3/23/10	6/10/10	Draft UFP-SAP	6/10/10
UFP-SAP Navy Review	Navy	6/10/10	7/10/10	Comments	7/10/10
Prepare Draft Final UFP-SAP	Tetra Tech	7/10/10	7/17/10	Draft Final UFP-SAP	7/17/10
Regulatory Review	EPA, SCDHEC	7/17/10	9/17/10	Comments	10/3/10
Final UFP-SAP	Tetra Tech	10/3/10	10/10/10	Final UFP-SAP	10/10/10
Mobilization and Field Investigation	Tetra Tech	7/19/10	7/19/10	NA	NA

SAP Worksheet #17 -- Sampling Design and Rationale

(UFP-QAPP Manual Section 3.1.1)

The sampling activities to be conducted in support of the Site 27 investigation of the Motor-T Area in preparation for construction activities scheduled to begin in summer 2010 is presented below. The analytical program recommended for each proposed sample is presented in Worksheet No. 18. The field QC samples required are specified in Worksheet No. 20.

While much of the known soil and groundwater contamination within Site 27 appears to have migrated from Site 55, the FOV Area, a source zone from a known operation, process, or spill release, has not been identified or fully delineated during previous investigations at Site 27 or Site 55. In order to expedite the investigation process such that risk to construction worker, maintenance workers, future industrial worker, and hypothetical future residents can be evaluated within the Motor-T Area and construction can begin, the Site 27 EU has been expanded to include the footprint of the major construction activities (building construction), as shown in Figure 10-1. This investigation is designed to collect data for a human health risk assessment and for delineation and characterization of contamination within the Motor-T Area EU). Objectives of the investigation also include ensuring PTW is not present at Site 27 and that any impact to buildings or infrastructure due to a response action post Motor-T construction will be mitigated. The FOV EU will be investigated along with Sites 9 and 16 in the near future and will be presented in the Site 55, 9 and 16 UFP-SAP.

Soil Sampling

Surface and subsurface soil samples that are representative of a receptor's exposure across the EU will be collected from soil borings installed in 15 locations across the Motor-T Area that provide for full coverage of the Motor-T EU, as shown in Figure 17-1. This also includes the 4 borings that will be retrieved while installing the well clusters (one shallow and one intermediate well) in the two locations on the eastern and western side of PAI-27-SO28. Because surface and subsurface soil data was collected previously, new sample locations were chosen in previously uninvestigated areas.

Surface soil samples will be collected beginning on the eastern boundary of the site and moving across the site in the westerly direction. Surface soil samples from the 0-1 ft bgs interval and screened with both the DDT and the TPH Petroflag test kits. If either DDT or TPH is detected in the surface soil via the field screening kits, a step-out sample will be collected at a distance of 50 feet away from the previously collected sample in the westerly direction. If the next sample collected is also contaminated, another step out sample will be collected until DDT and TPH are no longer detected with the field test kits. However, if the step-out sample falls within 25 ft of a previously planned sampling point as shown on Figure 17-1, the

step-out sample will not be collected because the predetermined sampling point will be used. All surface soil samples, including the step out samples will be sent to the laboratory for analysis.

Two subsurface soil samples will be collected from the 3-6 foot interval and screened with a PID, Oil-In-Soil™ test kits, TPH Petroflag Test Kits, DDT test kits, and FLUTe™ NAPL test kits to determine if PTW is present and to delineate contamination. A similar approach will be used to investigate the potential smear zone that may be present in the saturated zone into the water table. The clay layer is present at the 6-8 foot bgs interval. Samples from this interval will be collected and screened with a PID, Oil-In-Soil™ test kits, TPH Petroflag Test Kits, DDT test kits, and the FLUTe™ NAPL test kits to determine if PTW is present and in order to vertically delineate the contamination. Soil cores for both depth intervals (3-6 foot and 6-8 foot) will be screened using test kits in a “bench top” manner. (1) The soil core will be screened with the PID, (2) The soil core will then be split and a folded strip of the FLUTe™ NAPL test ribbon will be placed in the center of the core. The core will then be closed and wrapped in a poly film to prevent evaporation. The FLUTe™ NAPL test strip will be photographed and staining described in the field log book to assist in identifying the vertical extent of NAPL contamination in the subsurface soils, (3) the area of the core interval with the highest PID reading and/or most intense FLUTe test ribbon reaction will be selected for testing using Oil-In-Soil™ test kits, TPH Petroflag Test Kits, and DDT test kits. It is possible the field crew might select more than one interval. If a positive result occurs in any of the field screened samples, a step-out sample will be collected 50 ft from the initial sample except for the samples collected from the temporary monitoring wells east of PAI-27-SO28. A total of 30 subsurface soil samples will be sent to the laboratory for analysis. The decision to send a sample to the laboratory will be based on its location and its field measured concentration. If step-out samples have been collected and delineation is complete based on field measurements, those samples along the perimeter of contamination will be prioritized and sent for laboratory analysis. Following that decision, the samples with the highest concentrations of TPH and DDT will be selected until all 30 samples have been chosen. If more than one step-out sample is not required, then all of the subsurface samples will be sent to the laboratory for analysis.

The soil samples collected will be analyzed for TCL VOCS, SVOCs, pesticides, PCBs, and TAL metals. A biased sampling strategy was selected to represent areas of the site that have not yet been investigated, to delineate the DDT hot spot, to identify the potential presence of PTW and to complete characterization of Site 27.

Groundwater Sampling

Groundwater data collected during the Phase I and II RI indicated the presence of VOCs and pesticides at concentrations above human health screening criteria at both the Motor-T EU and the FOV Area EU. However, groundwater was not analyzed for metals and SVOCs during the previous investigations at

either EU. Therefore, additional groundwater samples must be collected and analyzed for TCL SVOCs, PAHs, PCBs and TAL metals to fully characterize the groundwater at the Motor-T EU. Groundwater data from the FOV EU will also be collected during this sampling event. Groundwater samples for both EUs will be collected from existing monitoring wells and from two newly installed temporary wells. Groundwater samples for both areas will be collected from all existing monitoring wells and from two newly installed temporary wells, which will each have a nested cluster of shallow (water table) and intermediate (just above the second clay layer or approximately 20-25 ft bgs) wells. The groundwater samples collected during this investigation will be analyzed for TCL VOCs, SVOCs, PAHs, PCBs, Pesticides, TAL Metals, TDS, TOC, and alkalinity to evaluate risks to the construction worker, maintenance workers, future industrial worker, and hypothetical future residents within the Motor-T Area, so construction can begin. The groundwater data collected in the Motor-T EU and the results from the FOV EU will be compared to groundwater PALs define the extent contamination in the Motor-T EU and the FOV EU. The groundwater data from the FOV EU will be used in conjunction with other data collected as outlined in the UFP-SAP for the FOV and presented in the RI Addendum Report. The existing monitoring wells and the proposed locations for the temporary wells that will be sampled during this effort are presented in Figure 17-1.

SAP Worksheet #18 -- Sampling Locations and Methods/SOP Requirements Table

(UFP-QAPP Manual Section 3.1.1)

Sampling Location/ID Number[1]	Matrix	Depth/ Location	Analytical Group	Number of Samples	Sampling Standard Operating Procedure Reference
SOIL SAMPLES – MOTOR-T AREA SITE CHARACTERIZATION (30 SAMPLES TO BE COLLECTED FROM 15 LOCATIONS THROUGHOUT MOTOR-T AREA PLUS 9 SAMPLES TO BE COLLECTED FROM 3 LOCATIONS AROUND PREVIOUSLY NOTED CONTAMINATION (PAI-27-SO-28). BASED ON FIELD OBSERVATIONS, SOME MID-DEPTH SAMPLES WILL NOT BE COLLECTED.					
PAI-27-S0-33-xx	Soil	0 – 1 ft bgs 3-5 ft bgs Saturated zone	TCL VOCs, SVOCs, PAHs, pesticides, PCBs, TAL metals, pH, and TOC	2 or 3	SA-2.5 Direct Push Technology
PAI-27-S0-34-xx	Soil	0 – 1 ft bgs 3-5 ft bgs Saturated zone	TCL VOCs, SVOCs, PAHs, pesticides, PCBs, TAL metals, pH, and TOC	2 or 3	SA-2.5 Direct Push Technology
PAI-27-S0-35-xx	Soil	0 – 1 ft bgs 3-5 ft bgs Saturated zone	TCL VOCs, SVOCs, PAHs, pesticides, PCBs, TAL metals, pH, and TOC	2 or 3	SA-2.5 Direct Push Technology
PAI-27-S0-36-xx	Soil	0 – 1 ft bgs 3-5 ft bgs Saturated zone	TCL VOCs, SVOCs, PAHs, pesticides, PCBs, TAL metals, pH, and TOC	2 or 3	SA-2.5 Direct Push Technology
PAI-27-S0-37-xx	Soil	0 – 1 ft bgs 3-5 ft bgs Saturated zone	TCL VOCs, SVOCs, PAHs, pesticides, PCBs, TAL metals, pH, and TOC	2 or 3	SA-2.5 Direct Push Technology
PAI-27-S0-38-xx	Soil	0 – 1 ft bgs 3-5 ft bgs Saturated zone	TCL VOCs, SVOCs, PAHs, pesticides, PCBs, TAL metals, pH, and TOC	2 or 3	SA-2.5 Direct Push Technology
PAI-27-S0-39-xx	Soil	0 – 1 ft bgs 3-5 ft bgs Saturated zone	TCL VOCs, SVOCs, PAHs, pesticides, PCBs, TAL metals, pH, and TOC	2 or 3	SA-2.5 Direct Push Technology
PAI-27-S0-40-xx	Soil	0 – 1 ft bgs 3-5 ft bgs Saturated zone	TCL VOCs, SVOCs, PAHs, pesticides, PCBs, TAL metals, pH, and TOC	2 or 3	SA-2.5 Direct Push Technology
PAI-27-S0-41-xx	Soil	0 – 1 ft bgs 3-5 ft bgs Saturated zone	TCL VOCs, SVOCs, PAHs, pesticides, PCBs, TAL metals, pH, and TOC	2 or 3	SA-2.5 Direct Push Technology
PAI-27-S0-42-xx	Soil	0 – 1 ft bgs 3-5 ft bgs Saturated zone	TCL VOCs, SVOCs, PAHs, pesticides, PCBs, TAL metals, pH, and TOC	2 or 3	SA-2.5 Direct Push Technology
PAI-27-S0-43-xx	Soil	0 – 1 ft bgs 3-5 ft bgs Saturated zone	TCL VOCs, SVOCs, PAHs, pesticides, PCBs, TAL metals, pH, and TOC	2 or 3	SA-2.5 Direct Push Technology

Sampling Location/ID Number[1]	Matrix	Depth/ Location	Analytical Group	Number of Samples	Sampling Standard Operating Procedure Reference
PAI-27-S0-44-xx	Soil	0 – 1 ft bgs 3-5 ft bgs Saturated zone	TCL VOCs, SVOCs, PAHs, pesticides, PCBs, TAL metals, pH, and TOC	2 or 3	SA-2.5 Direct Push Technology
PAI-27-S0-45-xx	Soil	0 – 1 ft bgs 3-5 ft bgs Saturated zone	TCL VOCs, SVOCs, PAHs, pesticides, PCBs, TAL metals, pH, and TOC	2 or 3	SA-2.5 Direct Push Technology
PAI-27-S0-46-xx	Soil	0 – 1 ft bgs 3-5 ft bgs Saturated zone	TCL VOCs, SVOCs, PAHs, pesticides, PCBs, TAL metals, pH, and TOC	2 or 3	SA-2.5 Direct Push Technology
PAI-27-S0-47-xx	Soil	0 – 1 ft bgs 3-5 ft bgs Saturated zone	TCL VOCs, SVOCs, PAHs, pesticides, PCBs, TAL metals, pH, and TOC	2 or 3	SA-2.5 Direct Push Technology
GROUNDWATER SAMPLES – SHALLOW MONITORING WELLS					
PAI-27-GW-01S-03	Groundwater	---	TCL VOCs, SVOCs, PAHs, PCBs, TAL metals(total and dissolved), TDS, TOC, and alkalinity	1	SA-1.1 – Groundwater Sample Acquisition and Onsite Water Quality Testing
PAI-27-GW-03S-03	Groundwater	---	TCL VOCs, SVOCs, PAHs, PCBs, TAL metals(total and dissolved), TDS, TOC, and alkalinity	1	SA-1.1 – Groundwater Sample Acquisition and Onsite Water Quality Testing
PAI-27-GW-04S-03	Groundwater	---	TCL VOCs, SVOCs, PAHs, PCBs, TAL metals(total and dissolved), TDS, TOC, and alkalinity	1	SA-1.1 – Groundwater Sample Acquisition and Onsite Water Quality Testing
PAI-27-GW-06S-03	Groundwater	---	TCL VOCs, SVOCs, PAHs, PCBs, TAL metals(total and dissolved), TDS, TOC, and alkalinity	1	SA-1.1 – Groundwater Sample Acquisition and Onsite Water Quality Testing
PAI-27-GW-09S-03	Groundwater	---	TCL VOCs, SVOCs, PAHs, PCBs, TAL metals(total and dissolved), TDS, TOC, and alkalinity	1	SA-1.1 – Groundwater Sample Acquisition and Onsite Water Quality Testing
PAI-27-GW-10S-03	Groundwater	---	TCL VOCs, SVOCs, PAHs, PCBs, TAL metals(total and dissolved), TDS, TOC, and alkalinity	1	SA-1.1 – Groundwater Sample Acquisition and Onsite Water Quality Testing
PAI-27-GW-11S-03	Groundwater	---	TCL VOCs, SVOCs, PAHs, PCBs, TAL metals(total and dissolved), TDS, TOC, and alkalinity	1	SA-1.1 – Groundwater Sample Acquisition and Onsite Water Quality Testing
PAI-27-GW-14S-03	Groundwater	---	TCL VOCs, SVOCs, PAHs, PCBs, TAL metals(total and dissolved), TDS, TOC, and alkalinity	1	SA-1.1 – Groundwater Sample Acquisition and Onsite Water Quality Testing
PAI-27-GW-16S-03	Groundwater	---	TCL VOCs, SVOCs, PAHs, PCBs, TAL metals(total and dissolved), TDS, TOC, and alkalinity	1	SA-1.1 – Groundwater Sample Acquisition and Onsite Water Quality Testing
PAI-27-GW-17S-03	Groundwater	---	TCL VOCs, SVOCs, PAHs, PCBs, TAL metals(total and dissolved), TDS, TOC, and alkalinity	1	SA-1.1 – Groundwater Sample Acquisition and Onsite Water Quality Testing

Sampling Location/ID Number[1]	Matrix	Depth/ Location	Analytical Group	Number of Samples	Sampling Standard Operating Procedure Reference
PAI-27-GW-19S-03	Groundwater	---	TCL VOCs, SVOCs, PAHs, PCBs, TAL metals(total and dissolved), TDS, TOC, and alkalinity	1	SA-1.1 – Groundwater Sample Acquisition and Onsite Water Quality Testing
PAI-27-GW-20S-03	Groundwater	---	TCL VOCs, SVOCs, PAHs, PCBs, TAL metals(total and dissolved), TDS, TOC, and alkalinity	1	SA-1.1 – Groundwater Sample Acquisition and Onsite Water Quality Testing
PAI-27-GW-21S-03	Groundwater	---	TCL VOCs, SVOCs, PAHs, PCBs, TAL metals(total and dissolved), TDS, TOC, and alkalinity	1	SA-1.1 – Groundwater Sample Acquisition and Onsite Water Quality Testing
PAI-27-GW-49S-02	Groundwater	---	TCL VOCs, SVOCs, PAHs, PCBs, TAL metals(total and dissolved), TDS, TOC, and alkalinity	1	SA-1.1 – Groundwater Sample Acquisition and Onsite Water Quality Testing
PAI-27-GW-51S-02	Groundwater	---	TCL VOCs, SVOCs, PAHs, PCBs, TAL metals(total and dissolved), TDS, TOC, and alkalinity	1	SA-1.1 – Groundwater Sample Acquisition and Onsite Water Quality Testing
PAI-27-GW-53S-02	Groundwater	---	TCL VOCs, SVOCs, PAHs, PCBs, TAL metals(total and dissolved), TDS, TOC, and alkalinity	1	SA-1.1 – Groundwater Sample Acquisition and Onsite Water Quality Testing
PAI-27-GW-55S-02	Groundwater	---	TCL VOCs, SVOCs, PAHs, PCBs, TAL metals(total and dissolved), TDS, TOC, and alkalinity	1	SA-1.1 – Groundwater Sample Acquisition and Onsite Water Quality Testing
PAI-27-GW-57S-02	Groundwater	---	TCL VOCs, SVOCs, PAHs, PCBs, TAL metals(total and dissolved), TDS, TOC, and alkalinity	1	SA-1.1 – Groundwater Sample Acquisition and Onsite Water Quality Testing
PAI-27-GW-58S-02	Groundwater	---	TCL VOCs, SVOCs, PAHs, PCBs, TAL metals(total and dissolved), TDS, TOC, and alkalinity	1	SA-1.1 – Groundwater Sample Acquisition and Onsite Water Quality Testing
PAI-27-GW-62S-02	Groundwater	---	TCL VOCs, SVOCs, PAHs, PCBs, TAL metals(total and dissolved), TDS, TOC, and alkalinity	1	SA-1.1 – Groundwater Sample Acquisition and Onsite Water Quality Testing
PAI-27-GW-63S-02	Groundwater	---	TCL VOCs, SVOCs, PAHs, PCBs, TAL metals(total and dissolved), TDS, TOC, and alkalinity	1	SA-1.1 – Groundwater Sample Acquisition and Onsite Water Quality Testing
PAI-27-GW-64S-02	Groundwater	---	TCL VOCs, SVOCs, PAHs, PCBs, TAL metals(total and dissolved), TDS, TOC, and alkalinity	1	SA-1.1 – Groundwater Sample Acquisition and Onsite Water Quality Testing
GROUNDWATER SAMPLES – SHALLOW TEMPORARY WELLS					
PAI-27-TW-65S-01	Groundwater	---	TCL VOCs, SVOCs, PAHs, PCBs, TAL metals(total and dissolved), TDS, TOC, and alkalinity	1	SA-1.1 – Groundwater Sample Acquisition and Onsite Water Quality Testing
PAI-27-TW-67S-01	Groundwater	---	TCL VOCs, SVOCs, PAHs, PCBs, TAL metals(total and dissolved), TDS, TOC, and alkalinity	1	SA-1.1 – Groundwater Sample Acquisition and Onsite Water Quality Testing

Sampling Location/ID Number[1]	Matrix	Depth/ Location	Analytical Group	Number of Samples	Sampling Standard Operating Procedure Reference
GROUNDWATER SAMPLES – INTERMEDIATE MONITORING WELLS					
PAI-27-GW-02I-03	Groundwater	---	TCL VOCs, SVOCs, PAHs, PCBs, TAL metals(total and dissolved), TDS, TOC, and alkalinity	1	SA-1.1 – Groundwater Sample Acquisition and Onsite Water Quality Testing
PAI-27-GW-05I-03	Groundwater	---	TCL VOCs, SVOCs, PAHs, PCBs, TAL metals(total and dissolved), TDS, TOC, and alkalinity	1	SA-1.1 – Groundwater Sample Acquisition and Onsite Water Quality Testing
PAI-27-GW-07I-03	Groundwater	---	TCL VOCs, SVOCs, PAHs, PCBs, TAL metals(total and dissolved), TDS, TOC, and alkalinity	1	SA-1.1 – Groundwater Sample Acquisition and Onsite Water Quality Testing
PAI-27-GW-12I-03	Groundwater	---	TCL VOCs, SVOCs, PAHs, PCBs, TAL metals(total and dissolved), TDS, TOC, and alkalinity	1	SA-1.1 – Groundwater Sample Acquisition and Onsite Water Quality Testing
PAI-27-GW-15I-03	Groundwater	---	TCL VOCs, SVOCs, PAHs, PCBs, TAL metals(total and dissolved), TDS, TOC, and alkalinity	1	SA-1.1 – Groundwater Sample Acquisition and Onsite Water Quality Testing
PAI-27-GW-18I-03	Groundwater	---	TCL VOCs, SVOCs, PAHs, PCBs, TAL metals(total and dissolved), TDS, TOC, and alkalinity	1	SA-1.1 – Groundwater Sample Acquisition and Onsite Water Quality Testing
PAI-27-GW-48I-02	Groundwater	---	TCL VOCs, SVOCs, PAHs, PCBs, TAL metals(total and dissolved), TDS, TOC, and alkalinity	1	SA-1.1 – Groundwater Sample Acquisition and Onsite Water Quality Testing
PAI-27-GW-50I-02	Groundwater	---	TCL VOCs, SVOCs, PAHs, PCBs, TAL metals(total and dissolved), TDS, TOC, and alkalinity	1	SA-1.1 – Groundwater Sample Acquisition and Onsite Water Quality Testing
PAI-27-GW-52I-02	Groundwater	---	TCL VOCs, SVOCs, PAHs, PCBs, TAL metals(total and dissolved), TDS, TOC, and alkalinity	1	SA-1.1 – Groundwater Sample Acquisition and Onsite Water Quality Testing
PAI-27-GW-54I-02	Groundwater	---	TCL VOCs, SVOCs, PAHs, PCBs, TAL metals(total and dissolved), TDS, TOC, and alkalinity	1	SA-1.1 – Groundwater Sample Acquisition and Onsite Water Quality Testing
PAI-27-GW-56I-02	Groundwater	---	TCL VOCs, SVOCs, PAHs, PCBs, TAL metals(total and dissolved), TDS, TOC, and alkalinity	1	SA-1.1 – Groundwater Sample Acquisition and Onsite Water Quality Testing
PAI-27-GW-59I-02	Groundwater	---	TCL VOCs, SVOCs, PAHs, PCBs, TAL metals(total and dissolved), TDS, TOC, and alkalinity	1	SA-1.1 – Groundwater Sample Acquisition and Onsite Water Quality Testing
PAI-27-GW-60I-02	Groundwater	---	TCL VOCs, SVOCs, PAHs, PCBs, TAL metals(total and dissolved), TDS, TOC, and alkalinity	1	SA-1.1 – Groundwater Sample Acquisition and Onsite Water Quality Testing
PAI-27-GW-61I-02	Groundwater	---	TCL VOCs, SVOCs, PAHs, PCBs, TAL metals(total and dissolved), TDS, TOC, and alkalinity	1	SA-1.1 – Groundwater Sample Acquisition and Onsite Water Quality Testing

Sampling Location/ID Number[1]	Matrix	Depth/ Location	Analytical Group	Number of Samples	Sampling Standard Operating Procedure Reference
GROUNDWATER SAMPLES – INTERMEDIATE TEMPORARY WELLS					
PAI-27-TW-66I-01	Groundwater	---	TCL VOCs, SVOCs, PAHs, PCBs, TAL metals(total and dissolved), TDS, TOC, and alkalinity	1	SA-1.1 – Groundwater Sample Acquisition and Onsite Water Quality Testing
PAI-27-TW-68I-01	Groundwater	---	TCL VOCs, SVOCs, PAHs, PCBs, TAL metals(total and dissolved), TDS, TOC, and alkalinity	1	SA-1.1 – Groundwater Sample Acquisition and Onsite Water Quality Testing
GROUNDWATER SAMPLES – DEEP MONITORING WELLS					
PAI-27-GW-08D-02	Groundwater	---	TCL VOCs, SVOCs, PAHs, PCBs, TAL metals(total and dissolved), TDS, TOC, and alkalinity	1	SA-1.1 – Groundwater Sample Acquisition and Onsite Water Quality Testing
PAI-27-GW-13D-02	Groundwater	---	TCL VOCs, SVOCs, PAHs, PCBs, TAL metals(total and dissolved), TDS, TOC, and alkalinity	1	SA-1.1 – Groundwater Sample Acquisition and Onsite Water Quality Testing
FIELD DUPLICATES – SOIL (4 FROM MOTOR–T AREA SITE CHARACTERIZATION)					
PAI-27-SO-MMDDYY-01	Soil	---	TCL VOCs, SVOCs, PAHs, pesticides, PCBs, TAL metals, pH, and TOC	1	SA-2.5 Direct Push Technology
PAI-27-SO-MMDDYY-02	Soil	---	TCL VOCs, SVOCs, PAHs, pesticides, PCBs, TAL metals, pH, and TOC	1	SA-2.5 Direct Push Technology
PAI-27-SO-MMDDYY-03	Soil	---	TCL VOCs, SVOCs, PAHs, pesticides, PCBs, TAL metals, pH, and TOC	1	SA-2.5 Direct Push Technology
PAI-27-SO-MMDDYY-04	Soil	---	TCL VOCs, SVOCs, PAHs, pesticides, PCBs, TAL metals, pH, and TOC	1	SA-2.5 Direct Push Technology
PAI-27-SO-MMDDYY-05	Soil	---	TCL VOCs, SVOCs, PAHs, pesticides, PCBs, TAL metals, pH, and TOC	1	SA-2.5 Direct Push Technology
FIELD DUPLICATES – GROUNDWATER (2)					
PAI-27-GW-MMDDYY-01	Groundwater	---	TCL VOCs, SVOCs, PAHs, PCBs, TAL metals(total and dissolved), TDS, TOC, and alkalinity	1	SA-1.1 – Groundwater Sample Acquisition and Onsite Water Quality Testing
PAI-27-GW-MMDDYY-02	Groundwater	---	TCL VOCs, SVOCs, PAHs, PCBs, TAL metals(total and dissolved), TDS, TOC, and alkalinity	1	SA-1.1 – Groundwater Sample Acquisition and Onsite Water Quality Testing
PAI-27-GW-MMDDYY-03	Groundwater	---	TCL VOCs, SVOCs, PAHs, PCBs, TAL metals(total and dissolved), TDS, TOC, and alkalinity	1	SA-1.1 – Groundwater Sample Acquisition and Onsite Water Quality Testing
PAI-27-GW-MMDDYY-04	Groundwater	---	TCL VOCs, SVOCs, PAHs, PCBs, TAL metals(total and dissolved), TDS, TOC, and alkalinity	1	SA-1.1 – Groundwater Sample Acquisition and Onsite Water Quality Testing

Sampling Location/ID Number[1]	Matrix	Depth/ Location	Analytical Group	Number of Samples	Sampling Standard Operating Procedure Reference
PAI-27-GW-MMDDYY-05	Groundwater	---	TCL VOCs, SVOCs, PAHs, PCBs, TAL metals(total and dissolved), TDS, TOC, and alkalinity	1	SA-1.1 – Groundwater Sample Acquisition and Onsite Water Quality Testing
IDW SAMPLES (QUANTITY TO DEPEND ON NUMBER OF CONTAINERS)					
PAI-27-IDW-MMDDYY-01	IDW	---	TCLP Organics and Inorganics, Flashpoint, Corrosivity (pH), Reactivity (cyanide, sulfide)	1	

1. XX – Sample Depth – Bottom of sample interval in feet below ground surface (bgs)
   MMDDYY – date of sample – month, day, year

SAP Worksheet #19 – Analytical SOP Requirements Table

(UFP-QAPP Manual Section 3.1.1)

Matrix	Analytical Group	Analytical and Preparation Method / SOP Reference	Containers (number, size, and type)	Sample volume (units)	Preservation Requirements (chemical, temperature, light protected)	Maximum Holding Time[1] (preparation / analysis)
Groundwater and Aqueous QC	VOCs	SW-846 5030B/8260B CompuChem 1.3.2.2	3, 40 milliliter (mL) vials	25 mL	Hydrochloric acid (HCl) to pH<2; Cool to Cool to 4°± 2 °C; no headspace	14 days to analysis
	SVOCs	SW-846 3510C/8270D, CompuChem 2.5.2.1/2.5.2.7	2, 1liter (L) glass amber bottles	1,000 mL	Cool to 4°± 2 °C	7 days to preparation; 40 days to analysis
	PAHs	SW-846 3510C/8270D Modified for SIM/ CompuChem 2.5.2.1, 2.4.4.5	2, 1L glass amber bottles	1,000 mL	Cool to 4°± 2 °C	7 days to preparation; 40 days to analysis
	Pesticides	SW-846 3510C/8081B/ CompuChem 2.2.4.1/2.2.4.10	2, 1L glass amber bottles	1,000 mL	Cool to 4°± 2 °C	7 days to preparation; 40 days to analysis
	PCBs	SW-846 3510C/8082A/ CompuChem 2.2.4.1, 2.2.5.3	2, 1L glass amber bottles	1,000 mL	Cool to 4°± 2 °C	7 days to preparation; 40 days to analysis
	Metals (Total and Dissolved)	SW-846 3010A/6010C/ 7470A CompuChem 3.2.1.4; 3.2.1.6, 3.3.1, 3.3.4	1, 500mL high density polyethene (HDPE)	150 mL	Nitric Acid (HNO_3) to pH<2	180 days to analysis; mercury 28 days to analysis

Matrix	Analytical Group	Analytical and Preparation Method / SOP Reference	Containers (number, size, and type)	Sample volume (units)	Preservation Requirements (chemical, temperature, light protected)	Maximum Holding Time[1] (preparation / analysis)
	Alkalinity	EPA 310.2/ CompuChem 3.5.1.1	1, 250mL HDPE	250 mL	Cool to 4°± 2 °C	14 days to analysis
	TOC	SM 5310B/ CompuChem 3.6.2.1	2, 40mL vials	40 mL	Sulfuric acid (H_2SO_4) to pH<2 Cool to 4°±2°C	28 days to analysis
	TDS	SM 2540C/ CompuChem 3.5.19.2	500 mL HDPE	100 mL	Cool to 4°± 2 °C	7 days to analysis
Soil	VOCs	SW-846 5035/8260B/ CompuChem 1.3.2.4	3, 40mL vials		2 Sodium Bisulfate, 1 methanol or 3-5 Encores + 1 4-ounce (oz) jar for dry weight; Cool to 4°C±2°C	14 days to analysis
	SVOCs	SW-846 3550C/8270D/ CompuChem 2.5.2.3/2.5.2.7	1, 8oz glass jar	30 grams (g)	Cool to 4°±2°C	14 days until extraction/40 days to analysis
	PAHs	SW-846 3550C/8270D Modified for SIM/ CompuChem 2.5.2.3/2.4.4.5	1, 8oz glass jar	30 g	Cool to 4°±2°C	14 days until extraction/40 days to analysis
	Pesticides	SW-846 3550C/8081A/ CompuChem 2.2.4.2/2.2.4.10	1, 8oz glass jar	30 g	Cool to 4°±2°C	14 days until extraction/40 days to analysis
	PCBs	SW-846 3550C/8082B/ CompuChem 2.2.4.2/ 2.2.5.3	1, 8oz glass jar	30 g	Cool to 4°±2°C	14 days until extraction/40 days to analysis
	Metals	SW-846 3050A/6010C/7471B/ CompuChem 3.2.1.5; 3.2.1.6; 3.3.2; 3.3.4	1, 2oz glass jar	125 g	Cool to 4°±2°C	Mercury 28 days to analysis; metals 180 days to analysis
	pH	SW-845 9045D/ CompuChem 3.5.14.3	1, 4-oz jar	20 g	Cool to 4° ±2°C	ASAP
	TOC	SW-846 9060A M/ 3.6.2.2 CompuChem	1, 4-oz jar	20 g	Cool to 4° ±2°C	28 Days to analysis

Matrix	Analytical Group	Analytical and Preparation Method / SOP Reference	Containers (number, size, and type)	Sample volume (units)	Preservation Requirements (chemical, temperature, light protected)	Maximum Holding Time[1] (preparation / analysis)
IDW[2]	TCLP Organics	SW-846 1311/3510C/5035/8260B/8270D/8081B/8151A; CompuChem 2.7.2/2.7.3/1.3.2.2/2.5.2.3/2.5.2.72.2.4.2/2.2.4.10/2.2.7.1/2.2.7.4	4, 8oz jars	400 g	Cool to 4° ±2°C	14 days leach/14 days analysis
	TCLP Inorganics	SW-846 1311/3010/6010C/ 7470A; CompuChem 3.2.1.4; 3.2.1.6; 3.3.1; 3.3.4	1, 8oz jar	100 g	Cool to 4° ±2°C	180 days leach/28 days mercury leach & analysis
	Flashpoint (ignitability)	SW-846 1010A; CompuChem 3.5.9.1	1, 8oz (shared with Reactive Cyanide & Reactive Sulfide)	50 g	Cool to 4° ±2°C	7 days to analysis
	pH	SW-846 9045D; CompuChem 3.5.14.3	1, 4-oz jar (	20 g	Cool to 4° ±2°C	ASAP
	Reactive Cyanide	SW-846 9014; CompuChem 3.4.4	1, 8oz(shared with Flashpoint & Reactive Sulfide)	10 g	Cool to 4° ±2°C	7 days to analysis
	Reactive Sulfide	SW-846 9034; CompuChem 3.5.18.1	1, 8oz (shared with Reactive Cyanide & Flashpoint)	10 g	Cool to 4° ±2°C	7 days to analysis

1 Maximum holding time is calculated from the time the sample is collected to the time the sample is prepared/extracted.
2 IDW sample analyses are presented on this worksheet for the utilization of field personnel. Quality control information is not presented in any of the remaining worksheets as these samples are for waste disposal not decision making purposes.

SAP Worksheet #20 -- Field Quality Control Sample Summary Table

(UFP-QAPP Manual Section 3.1.1)

Matrix	Analytical Group	Number of Sampling Locations	Number of Field Duplicates	Number of MS/MSDs	Number of Field Blanks	Number of Equip. Blanks	Number of VOC Trip Blanks	Number of PT Samples	Total Number of Samples to Lab
Groundwater	TCL VOCs	42	5	3	1	3	3	0	57
	TCL SVOCs	42	5	3	1	3	NA	0	54
	PCBs	42	5	3	1	3	NA	0	54
	PAHs	42	5	3	1	3	NA	0	54
	TAL Metals (total and dissolved)	42	5	3	1	3	NA	0	54
	TOC	42	5	3	1	3	NA	0	54
	TDS	42	5	3	1	3	NA	0	54
	Alkalinity	42	5	3	1	3	NA	0	54
Soil	TCL VOCs	30 to 45	3 to 5	2 or 3	1	2 or 3	3 to 5	0	41 to 62
	TCL SVOCs	30 to 45	3 to 5	2 or 3	1	2 or 3	NA	0	38 to 57
	PAHs	30 to 45	3 to 5	2 or 3	1	2 or 3	NA	0	38 to 57
	TCL Pesticides	30 to 45	3 to 5	2 or 3	1	2 or 3	NA	0	38 to 57
	TCL PCBs	30 to 45	3 to 5	2 or 3	1	2 or 3	NA	0	38 to 57
	TAL Metals	30 to 45	3 to 5	2 or 3	1	2 or 3	NA	0	38 to 57

Matrix	Analytical Group	Number of Sampling Locations	Number of Field Duplicates	Number of MS/MSDs	Number of Field Blanks	Number of Equip. Blanks	Number of VOC Trip Blanks	Number of PT Samples	Total Number of Samples to Lab
	pH	30 to 45	3 to 5	NA	NA	NA	NA	0	38 to 57
	TOC	30 to 45	3 to 5	NA	NA	NA	NA	0	38 to 57

MS/MSD - Matrix Spike/Matrix Spike Duplicate
PT - Proficiency Testing
NA - Not Applicable

SAP Worksheet #21 -- Project Sampling SOP References Table

(UFP-QAPP Manual Section 3.1.2)

Reference Number	Title, Revision Date and/or Number	Organization of Sampling SOP	Equipment Type	Modified for Project Work?	Comments
CT-04	Sample Nomenclature, (September 2003 Revision 1)	Tetra Tech	None	N	Refer to Appendix D for Field SOPs
CT-05	Database Records and Quality Assurance, January 2001, Revision 2	Tetra Tech	None	N	
GH-1.2	Evaluation of Existing Monitoring Wells and Water Level Measurement (September 2003, Revision 2)	Tetra Tech	Field logbook, electric water-level indicator or hydrocarbon interface probe, field forms, decontamination equipment and supplies, PID	Y	
SA-1.1	Groundwater Sample Acquisition and Onsite Water Quality Testing (April 2008, Revision 7)	Tetra Tech	Sample bottleware, packaging material, shipping material, field tools and instrumentation, peristaltic pump, tubing, buckets, decontamination equipment and supplies, field logbook, paper towels, combination meter for monitoring field parameters	Y	
SA-1.3	Soil Sampling (April 2009, Revision 9)	Tetra Tech	Encore™ sampling kit, safety glasses, nitrile surgeon's gloves, paper towels, packaging material, shipping material, decontamination equipment and supplies, sample bottleware, disposable trowel	Y	
SA-2.5	Direct Push Technology (Geoprobe®/Hydropunch™) (September 2003, Revision 3)	Tetra Tech	Geoprobe® sampling kit, PID, cut-resistant gloves, macrocore sampler, disposable sampler liners, probe sampler adaptors, Roto-hammer, Geoprobe® large bore soil sampler, decontamination equipment and supplies, cast aluminum or steel drive point, bentonite chips or equivalent	Y	
SA-6.1	Non-Radiological Sample Handling, (February 2004, Revision 3)	Tetra Tech	Sample bottleware, packaging material, shipping materials	N	

Reference Number	Title, Revision Date and/or Number	Organization of Sampling SOP	Equipment Type	Modified for Project Work?	Comments
SA-6.3	Field Documentation, (September 2003, Revision 2)	Tetra Tech	Field logbook, field sample forms, boring logs	Y	
SA-7.1	Decontamination of Field Equipment, (April 2008 Revision 5)	Tetra Tech	Decontamination equipment, scrub brushes, phosphate-free detergent, deionized water	Y	

SAP Worksheet #22 -- Field Equipment Calibration, Maintenance, Testing, and Inspection Table

(UFP-QAPP Manual Section 3.1.2.4)

Field Equipment	Activity	Frequency	Acceptance Criteria	Corrective Action	Responsible Person	Standard Operating Procedure Reference	Comments
YSI 600 Series Water Quality Meter	Visual Inspection Calibration/ Verification	Daily Beginning and end of day	Manufacturer's guidance	Operator correction or replacement	FOL or designee	GH-2.8, GW-001, SA-1.1, SA-1.2, Manufacturer's Guidance Manual	None
Turbidity Meter (LaMotte 2020 or equivalent)	Visual Inspection Calibration/ Verification	Daily Beginning and end of day	Manufacturer's guidance Calibrations must bracket expected values. Initial Calibration Verification (ICV) must be <5 NTU.	Operator correction or replacement	Tetra Tech FOL or designee	GH-2.8, GW-001, SA-1.1, SA-1.2, Manufacturer's Guidance Manual	To be used to determine the need to collect Dissolved Metals samples (if >5 NTU).
Water Level Indicator and Oil/Water Interface Probe	Visual Inspection Field checks as per manufacturer	Daily Once upon receiving from vendor	0.01 foot accuracy	Operator correction or replacement	Tetra Tech FOL or designee	GH-1.2, Manufacturer's Guidance Manual	None
Photoionization Detector (PID)	Visual Inspection Calibration/ Verification	Daily Beginning and end of day	Manufacturer's Guidance	Operator correction or replacement	Tetra Tech FOL or designee	SA-1.1, SA-1.2, SA-1.3, GH-1.2, GH-1.3, GH-1.5, GH-2.8, Manufacturer's Guidance Manual	To be used to determine the soil boring depth that is most impacted for biased sample collection.

FOL - Field Operations Leader
PID - Photoionization detector

SAP Worksheet #23 -- Analytical SOP References Table

(UFP-QAPP Manual Section 3.2.1)

Lab SOP Number	Title, Revision Date, and / or Number	Definitive or Screening Data	Matrix and Analytical Group	Instrument	Organization Performing Analysis	Modified for Project Work?[1] (Y/N)
1.3.2.2	Analysis of Volatile Organic Compounds in Aqueous and Medium/High Concentration Soil Samples by SW-846, Revision 14, 4/5/10	Definitive	Aqueous QC/VOC	Gas Chromatography/ Mass Spectrometry (GC/MS)	CompuChem	N
1.3.2.4	GC/MS Analysis of Low Concentration Volatiles in Soil/Sediment/Sludge Samples by SW-846 Method 8260B, Revision 12, 4/1/10	Definitive	Soil/VOC	GC/MS	CompuChem	N
2.2.4.1	Sample Preparation for Pesticides/PCBs in Water SW-846, Revision 12, 4/7/10	Definitive	Aqueous QC/ Pesticides/PCBs preparation	NA	CompuChem	N
2.2.4.2	Low Level Preparation for Analysis of Pesticides/PCBs in Soil/Sediment/Sludge by SW-846, Revision 12, 4/1/10	Definitive	Soil/ Pesticides/PCBs preparation	NA	CompuChem	N
2.2.4.10	GC/ECD Analysis of Organochlorine Pesticides in Water and Soil Extracts by SW-846 Method 8081A and Method 8081B, Revision 8, 3/8/10	Definitive	Aqueous QC/Pesticides	Gas Chromatography/ Electron Capture Detector (GC/ECD)	CompuChem	N
2.2.5.1	PCBs in Water Preparation Procedure (SW-846, Revision 10, 3/31/10	Definitive	Aqueous QC/PCBs preparation	NA	CompuChem	N
2.2.5.3	GC/ECD Analysis of Polychlorinated Biphenyls (PCBs) as Aroclors in Water and Soil by SW-846 Method 8082 and Method 8082A, Revision 9, 3/11/10	Definitive	Aqeuous QC/PCBs	GC/ECD	CompuChem	N
2.5.2.1	Preparation of Water Samples for the Analysis of Semivolatiles by SW-846 Method 3510C and EPA 625, Revision 13, 6/14/08	Definitive	Groundwater/ Semivolatiles preparation	NA	CompuChem	N
2.5.2.3	Preparation of Soil/Sediment/Sludge Samples by SW-846 Method 3550B and Method 3550C for the Analysis of Low-Level Semivolatiles, Revision 13, 10/13/09	Definitive	Soil/ Semivolatiles preparation	NA	CompuChem	N

Lab SOP Number	Title, Revision Date, and / or Number	Definitive or Screening Data	Matrix and Analytical Group	Instrument	Organization Performing Analysis	Modified for Project Work?[1] (Y/N)
2.5.2.7	GC/MS Analysis of Extractable Semivolatiles in Aqueous and Solid Samples by SW-846 , Revision 14, 4/1/10	Definitive	Groundwater/ Semivolatiles	GC/MS	CompuChem	N
3.2.1.4	Digestion Block Preparation of Aqueous Samples for ICP Analysis of Total or Dissolved Metals by SW-846, MCAWW, and Standard Methods, Revision 4, 5/27/08	Definitive	Groundwater/Metals digestion	NA	CompuChem	N
3.2.1.5	Digestion Block Preparation of Soil Samples for ICP Determination of Total Metals by SW-846 Method 3050B, Revision 7, 6/5/08	Definitive	Soil/Metals digestion	NA	CompuChem	N
3.2.1.6	Inductively Coupled Plasma Atomic Emission Spectroscopy by SW-846 Methods 6010B/6010C, Revision 17, 8/31/09	Definitive	Groundwater/Metals	Inductively Coupled Plasma Atomic Emission Spectroscopy (ICP-AES)	CompuChem	N
3.3.1	Mercury in Water, Manual Digestion Procedure for EPA CLP, SW-846, and MCAWW, Revision 21, 3/31/10	Definitive	Groundwater/Mercury digestion	NA	CompuChem	N
3.3.2	Solid Sample Mercury Digestion by SW-846 Methods 7471A and 7471B, Revision 17, 9/2/09	Definitive	Soil/Mercury digestion	NA	CompuChem	N
3.3.4	Automated Cold Vapor Determination for Mercury by CLP, SW-846, MCAWW, Revision 22, 10/12/09	Definitive	Groundwater/Soil Mercury	Cold Vapor Atomic Absorption (CVAA)	CompuChem	N
3.5.1.1	Alkalinity in Waters and Leachates by MCAWW Method 310.2 and Lachat Method 10-303-31-1-A, Revision 9, 9/11/09	Definitive	Groundwater/Alkalinity	Lachat	CompuChem	N
3.6.2.1	Total Organic Carbon (TOC) in Water, by Standard Methods 5310B and SW-846 Methods 9060 and 9060A, Revision 14, 9/3/09	Definitive	Groundwater/TOC	TOC Analyzer	CompuChem	N
3.6.2.2	Analysis of Soil Samples for Total Organic Carbon (TOC) by SW-846 Method 9060A, modified for Soils, and Lloyd Kahn, Revision 15, 10/6/09	Definitive	Soil	TOC Analyzer	CompuChem	N

Lab SOP Number	Title, Revision Date, and / or Number	Definitive or Screening Data	Matrix and Analytical Group	Instrument	Organization Performing Analysis	Modified for Project Work?[1] (Y/N)
3.5.19.2	Filterable Residue, Total Dissolved Solids, by Standard Methods for the Examination of Water and Wastewater, Revision 10, 7/20/09	Definitive	Groundwater/TDS	NA	CompuChem	N

Laboratory SOPs are found in Appendix F.

1. If yes, then specify the modification that has been made. Note that any analytical SOP modification made relative to project specific needs must be reviewed and approved by the Navy QAO.

SAP Worksheet #24 -- Analytical Instrument Calibration Table

(UFP-QAPP Manual Section 3.2.2)

Instrument	Calibration Procedure	Frequency of Calibration	Acceptance Criteria	Corrective Action (CA)	Person Responsible for CA	SOP Reference
GC/MS - VOC and SVOC/PAH	Tune Verification - Bromofluorobenzene (BFB) for VOCs and decafluorotriphenyl phosphine (DFTPP) for SVOCs.	The tune is verified at the beginning of each 12-hour analytical sequence.	The tune verification must meet the ion abundance criteria required by the method. Selected Ion Monitoring (SIM): must meet the mass drift and peak width criteria required by the SOP. No samples may be accepted without a valid tune.	Manually tune the instrument and/or replace the ion source or filament.	Analyst/ Laboratory Area Supervisor	1.3.2.2; 1.3.2.4; 2.4.4.5, 2.5.2.7
	Initial Calibration (ICAL) – minimum of a five point calibration curve is prepared.	Perform after major instrument maintenance and upon failure of second consecutive continuing calibration verification.	The average response factor (RF) for VOC System Performance Check Compound (SPCCs) must be ≥0.30 for chlorobenzene and 1,1,2,2-tetrachloroethane, ≥ 0.1 for chloromethane, bromoform, and 1,1-dichloroethane. The average RF for SVOC SPCCs must be ≥ 0.05 (≥0.010 for SIM). The RSD for calibration check compounds (CCCs) for VOCs and SVOCs ≤ must be ≤ 30%; percent relative standard deviation (%RSD) for each analyte must be ≤ 15% or the linear least squares regression (r) must be ≥ 0.995.	Recalibrate.	Analyst/ Laboratory Area Supervisor	
	Initial Calibration Verification (ICV)	Perform after each initial calibration.	The percent recovery of all analytes must be 80-120%.	Recalibrate.	Analyst/ Laboratory Area Supervisor	

Instrument	Calibration Procedure	Frequency of Calibration	Acceptance Criteria	Corrective Action (CA)	Person Responsible for CA	SOP Reference
	Continuing Calibration Verification (CCV)	Perform one per 10 field samples analyzed.	The RF for VOC SPCCs must be ≥0.30 for chlorobenzene and 1,1,2,2-tetrachloroethane, ≥ 0.1 for chloromethane, bromoform, and 1,1-dichloroethane. The RF for all SVOCs must be ≥ 0.05. The percent difference/drift (%D) for VOCs and SVOCs ≤ must be ≤ 20%.	Recalibrate	Analyst/ Laboratory Area Supervisor	
	Retention Time (RT) Window Position Establishment	Once per ICAL for each analyte and surrogate.	Position shall be set using the midpoint standard of the ICAL curve when ICAL is performed. On days when ICAL is not performed, the initial CCV is used.	NA.	Analyst/ Laboratory Area Supervisor	
	Evaluation of Relative Retention Times (RRTs)	With each sample.	RRT of each target analyte must be within ± 0.006 RRT units.	Correct problem, then rerun ICAL.	Analyst/ Laboratory Area Supervisor	
GC/ECD - Pesticides and PCBs	Breakdown Check (pesticides only)	Perform daily prior to sample analysis.	The degradation must be ≤ 15% for both Endrin and DDT.	Column maintenance; injection port maintenance	Analyst/ Laboratory Area Supervisor	2.2.4.10; 2.2.5.3
	ICAL minimum five point calibration curve is prepared.	Perform after major instrument maintenance and upon failure of second consecutive continuing calibration verification.	The %RSD for each analyte must be ≤ 20% or linear least squares regression r ≥ 0.995.	Recalibrate.	Analyst/ Laboratory Area Supervisor	
	ICV	Perform after initial calibration.	The percent recovery of all analytes must be 80-120%.	Recalibrate.	Analyst/ Laboratory Area Supervisor	
	CCV	Perform one per 10 field samples analyzed	The percent recovery of all analytes must be 80-120%.	Recalibrate.	Analyst/ Laboratory Area Supervisor	
CVAA - Mercury	ICAL – five point calibration curve is prepared.	Perform daily prior to sample analysis.	The correlation coefficient must be ≥ 0.995	Recalibrate.	Analyst/ Laboratory Area Supervisor	3.3.4

Instrument	Calibration Procedure	Frequency of Calibration	Acceptance Criteria	Corrective Action (CA)	Person Responsible for CA	SOP Reference
	ICV	Each analytical sequence.	Analytes must agree within 10% of the expected value	Recalibrate	Analyst/ Laboratory Area Supervisor	
	Calibration Blank	One is performed at the beginning of analytical sequence, after every 10 samples, at the end of the sequence	All target analyte concentrations must be < LOD.	Re-prepare and analyze all associated samples.	Analyst/ Laboratory Area Supervisor	
	CCV	Perform every 10 samples and at the end of the analytical sequence.	The percent recovery must be 80-120%.	Recalibrate.	Analyst/ Laboratory Area Supervisor	
TOC Analyzer	ICAL	Each analytical sequence.	Correlation coefficient of curve must be ≥ 0.995.	Recalibrate	Analyst/ Laboratory Area Supervisor	3.6.2.1
	ICV	Each analytical sequence.	Analyte must agree within 10% of analyte true value.	Recalibrate	Analyst/ Laboratory Area Supervisor	
	CCV	Every 10 samples and at the end of the analytical sequence.	Analyte must agree within 10% of analyte true value.	Recalibrate	Analyst/ Laboratory Area Supervisor	
ICP-AES – Metals	ICAL - the instrument is calibrated by a one point calibration per manufacturer's guidelines.	At the beginning of each day, or if the QC is out of criteria.	None; only one high standard and a calibration blank must be analyzed. If more than one calibration standard is used, correlation coefficient ≥ 0.995.	Recalibrate and/or perform the necessary equipment maintenance. Check the calibration standards. Reanalyze the affected data.	Analyst/ Supervisor	3.2.1.6
	ICV – from a source different than that used for calibration curve.	Following initial calibration prior to the analysis of samples.	The %R must be between 90-110% of true value.	Investigate reasons for failure, reanalyze once. If still unacceptable, repeat calibration.	Analyst/ Supervisor	

Instrument	Calibration Procedure	Frequency of Calibration	Acceptance Criteria	Corrective Action (CA)	Person Responsible for CA	SOP Reference
	Initial Calibration Blank (ICB)	Before beginning a sample sequence.	No analyte detected above the LOD.	Correct the problem, then re-prepare and reanalyze.	Analyst/ Supervisor	
	CCV	Analyze a standard at the beginning and end of the sequence and after every 10 samples.	The %R must be between 90-110% of true value.	Recalibrate and/or perform the necessary equipment maintenance. Check the calibration standards. Reanalyze the affected data.	Analyst/ Supervisor	
	Continuing Calibration Blank (CCB)	After the initial continuing calibration verification, after every 10 samples, and at the end of the sequence.	No analyte detected above the LOD.	Correct the problem, then re-prepare and reanalyze calibration blank and previous 10 samples.	Analyst/ Supervisor	
	Low-Level Check Standard	Daily after initial calibration and before samples.	The %R must be between 80-120 of the true value.	Investigate and perform necessary equipment maintenance. Recalibrate and reanalyze all affected samples.	Analyst/ Supervisor	
	Interference Check Standards (ICS – ICS A and ICS B)	At the beginning and end of an analytical run and after each batch of 20 samples.	ICS A recoveries must be within the absolute value of the LOD and ICS B recoveries must be within 80-120 %R of the true value.	Investigate and perform necessary equipment maintenance. Recalibrate and reanalyze all affected samples.	Analyst/ Supervisor	

Instrument	Calibration Procedure	Frequency of Calibration	Acceptance Criteria	Corrective Action (CA)	Person Responsible for CA	SOP Reference
Lachat-Alkalinity	ICAL –a six point calibration is preformed.	Perform daily prior to sample analysis.	The correlation coefficient must be ≥ 0.995	Recalibrate.	Analyst/ Laboratory Area Supervisor	3.5.1.1
	ICV	Perform daily prior to sample analysis.	The percent recovery must be 90-110%.	Recalibrate.	Analyst/ Laboratory Area Supervisor	
	ICB	One is performed following each initial calibration and every 2 hours or every 10 analytical samples, whichever is more frequent.	The absolute value of calibration blank must not be greater than one half the reporting limit. If that criterion is not met, then determine where the problem is occurring.	Stop analysis, correct problem and recalibrate and reanalyze.	Analyst/ Laboratory Area Supervisor	
	CCB	One is performed following each continuing calibration verification at a10% frequency throughout the analytical run.	The absolute value of calibration blank must not be greater than one half the reporting limit. If that criterion is not met, then determine where the problem is occurring.	Stop analysis, correct problem and recalibrate and reanalyze.	Analyst/ Laboratory Area Supervisor	
	CCV	Perform after each initial calibration.	The percent recovery must be 90-110%.	Reanalyze. Recalibrate, if reanalysis fails.	Analyst/ Laboratory Area Supervisor	

SAP Worksheet #25 -- Analytical Instrument and Equipment Maintenance, Testing, and Inspection Table

(UFP-QAPP Manual Section 3.2.3)

Instrument / Equipment	Maintenance Activity	Testing Activity	Inspection Activity	Frequency	Acceptance Criteria	Corrective Action	Responsible Person[2]	SOP Reference[1]
GC/MS	Replace or clean ion source; clean injector, replace injector liner, replace or clip capillary column, flush or replace tubing on purge and trap; replace trap.	Volatiles	Ion source, injector liner, column, column flow, purge lines, purge flow, trap	Perform as needed.	Initial and/or continuing calibration criteria must be met.	Repeat maintenance activity or remove from service.	Analyst/ Laboratory Area Supervisor	1.3.2.2;1.3.2.4
GC/MS	Replace or clean ion source; clean injector, replace injector liner, replace or clip capillary column, flush or replace tubing on purge and trap; replace trap.	Semivolatiles and PAHs	Ion source, injector liner, column, column flow, septum	Perform as needed.	Initial and/or continuing calibration criteria must be met.	Repeat maintenance activity or remove from service.	Analyst/ Laboratory Area Supervisor	2.4.4.5; 2.5.2.7
GC/ECD	Perform ECD maintenance; replace or clip capillary column.	Pesticides/ PCBs	ECD, injector, injector liner, column, adjust column flow	Perform as needed.	Initial and/or continuing calibration criteria must be met.	Repeat maintenance activity or remove from service.	Analyst/ Laboratory Area Supervisor	2.2.4.10; 2.2.5.3

Instrument / Equipment	Maintenance Activity	Testing Activity	Inspection Activity	Frequency	Acceptance Criteria	Corrective Action	Responsible Person[2]	SOP Reference[1]
ICP-AES	Clean plasma torch; clean filters; clean spray and nebulizer chambers; replace pump tubing.	Metals	Torch, filters, nebulizer chamber, pump, pump tubing	Perform as needed.	Initial and/or continuing calibration criteria must be met.	Repeat maintenance activity or remove from service.	Analyst/ Laboratory Area Supervisor	3.2.1.6
CVAA	Clean or replace dehydrator tubing and sample mixing coil tubing; replace sample probe; replace pump tubing; clean optical cell.	Mercury	Tubing, sample probe, optical cell	Perform as needed.	Initial and/or continuing calibration criteria must be met.	Repeat maintenance activity or remove from service.	Analyst/ Laboratory Area Supervisor	3.3.4
TOC Analyzer	Replace sample tubing, clean sample boat, replace syringe.	TOC	Tubing, sample boat, syringe	As needed	Must meet initial and/or continuing calibration criteria.	Repeat maintenance activity of remove from service.	Analyst/ Laboratory Area Supervisor	3.6.2.1
Lachat	Degas solutions, Change tubing, lamp, and clean connectors.	Alkalinity	Tubing and rollers.	Prior to initial calibration or as necessary.	The acceptance limits are 90-110% of the true value.	Recalibrate and/or perform necessary equipment maintenance. Reanalyze samples not bracketed by passing continuing calibration.	Analyst/ Supervisor	3.5.1.1

SAP Worksheet #26 -- Sample Handling System

(UFP-QAPP Manual Appendix A)

SAMPLE HANDLING SYSTEM

SAMPLE COLLECTION, PACKAGING, AND SHIPMENT
Sample Collection (Personnel/Organization): FOL or designee/Tetra Tech
Sample Packaging (Personnel/Organization): FOL or designee/ Tetra Tech
Coordination of Shipment (Personnel/Organization): FOL or designee/ Tetra Tech
Type of Shipment/Carrier: Express mail courier
SAMPLE RECEIPT AND ANALYSIS
Sample Receipt (Personnel/Organization): Sample Custodians/CompuChem
Sample Custody and Storage (Personnel/Organization): Sample Custodians/CompuChem
Sample Preparation (Personnel/Organization): Extraction and Preparation Technicians/CompuChem
Sample Determinative Analysis (Personnel/Organization): Analysts /CompuChem
SAMPLE ARCHIVING
Field Sample Storage (No. of days from sample collection): 60 days from receipt
Sample Extract/Digestate Storage (No. of days from extraction/digestion): 3 months
Biological Sample Storage (No. of days from sample collection): NA
SAMPLE DISPOSAL
Personnel/Organization: Sample Custodians/CompuChem

SAP Worksheet #27 – Sample Custody Requirements Table

(UFP-QAPP Manual Section 3.3.3)

Field Chain of Custody

To ensure the integrity of a sample from collection through analysis, an accurate written record that traces the possession and handling of the sample is necessary. This documentation is referred to as the chain-of-custody form. Chain-of-custody begins at the time of sample collection. A sample is under custody if any of the following conditions apply:

- It is in the owner's actual possession,
- It is in the owner's view, after being in his/her physical possession,
- It was in the owner's possession and then was locked up or sealed it up to prevent tampering,
- It is in a secure area.

Custody documentation is designed to provide documentation of preparation, handling, storage, and shipping of all samples collected. A multi-part chain-of-custody form is used with each page of the form signed and dated by the recipient of a sample or portion of sample. The person releasing the sample and the person receiving the sample will retain copies of the chain-of-custody form each time a sample transfer occurs.

Preservation of the integrity of the samples collected during the SI will be the responsibility of identified persons from the time the samples are collected until the samples, or their derived data, are incorporated into the final report.

The Tetra Tech FOL is responsible for the care and custody of the samples collected until they are delivered to the laboratory or are entrusted to a carrier. When transferring samples, the individuals relinquishing and receiving them will sign, date, and note the time on the chain-of-custody form. This form documents the sample custody transfer from the sampler to the laboratory, often through another person or agency (common carrier). Field chain-of-custody requirements are provided in SOP-SA-6.3 (Appendix D). Upon arrival at the laboratory, internal sample custody procedures will be followed as defined in the Laboratory SOPs included in Appendix F.

Laboratory Chain of Custody – CompuChem

Laboratory sample custody procedures (receipt of samples, archiving, and disposal) will be used according to CompuChem SOPs. Coolers are received and checked for proper temperature. The chain-of-custody form will be checked against the sample containers for correctness. Samples will be logged

into the laboratory information management system (LIMS) and given a unique log number that can be tracked through processing. The client will be notified of any problems.

SAP Worksheet #28 -- Laboratory QC Samples Table

(UFP-QAPP Manual Section 3.4)

Matrix	Groundwater, Aqueous QC/Soil
Analytical Group	VOCs
Analytical Method/SOP Reference	SW-846 8260B 1.3.2.2/ 1.3.2.4

QC Sample	Frequency/Number	Method/SOP QC Acceptance Limits	Corrective Action	Person(s) Responsible for Corrective Action	Data Quality Indicator (DQI)	Measurement Performance Criteria
Method Blank	One is performed for each batch of up to 20 samples.	Contaminants in the method blank must be < ½ LOQs, except common laboratory contaminants, which must be <LOQ.	Re-prepare and analyze all associated samples.	Analyst/Laboratory Area Supervisor	Contamination/Bias	Same as Method/SOP QC Acceptance Limits.
Laboratory Control Sample (LCS)	One is performed for each batch of up to 20 samples.	%Rs must meet the limits provided in the CompuChem QC Limits table provided in Appendix F[1].	Re-prepare and analyze all associated samples.	Analyst/Laboratory Area Supervisor	Accuracy	Same as Method/SOP QC Acceptance Limits.
MS/MSD	One is performed for each batch of up to 20 samples.	%Rs must meet the limits provided in the CompuChem QC Limits table provided in Appendix F[1] RPD between MS and MSD should be ≤ 30%.	If both the LCS and MS/MSD are unacceptable, re-prepare and analyze the associated samples and QC.	Analyst/Laboratory Area Supervisor	Accuracy	Same as Method/SOP QC Acceptance Limits.
Surrogates	4 per sample: Dibromofluoromethane 1,2-dichloroethane-d4 Toluene-d8 Bromofluorobenzene	%Rs must meet the limits provided in the CompuChem QC Limits table provided in Appendix F[1]	(1) Re-prepare and reanalyze for confirmation of matrix interference when appropriate.	Analyst, Laboratory Supervisor	Accuracy/Bias	Same as Method/SOP QC Acceptance Limits.

Matrix	Groundwater, Aqueous QC/Soil
Analytical Group	VOCs
Analytical Method/SOP Reference	SW-846 8260B 1.3.2.2/ 1.3.2.4

QC Sample	Frequency/Number	Method/SOP QC Acceptance Limits	Corrective Action	Person(s) Responsible for Corrective Action	Data Quality Indicator (DQI)	Measurement Performance Criteria
Internal Standards (IS)	3 per sample- Fluorobenzene Chlorobenzene-d5 1,4-dichlorobezene-d4	Retention times for ISs must be within ± 30 seconds and the response areas must be within -50% to +100% of the last CCV for each IS.	Inspect mass spectrometer or gas chromatograph for malfunctions; mandatory reanalysis of samples analyzed while system was malfunctioning	Analyst, Laboratory Supervisor	Precision/Accuracy/Bias	Same as Method/SOP QC Acceptance Limits.

1 Please note that limits are updated periodically and may change from the issuance of the final SAP to the time data validation is performed. The limits used for validation will be the limits that are current at the time of analysis.

Matrix	Groundwater, Aqueous QC/Soil
Analytical Group	SVOCs/PAH SIM
Analytical Method/SOP Reference	SW-846 8270D/2.5.2.7/2.4.4.5

QC Sample:	**Frequency/Number**	**Method/SOP QC Acceptance Limits**	**Corrective Action**	**Person(s) Responsible for Corrective Action**	**Data Quality Indicator (DQI)**	**Measurement Performance Criteria**
Method Blank	One is performed for each batch of up to 20 samples.	Contaminants in the method blank must be < ½ LOQs, except common lab contaminants, which must be <LOQ.	Re-prepare and analyze associated samples.	Analyst/Laboratory Area Supervisor	Contamination /Bias	Same as Method/SOP QC Acceptance Limits.
LCS	One is performed for each batch of up to 20 samples.	%Rs must meet the limits provided in the CompuChem QC Limits table provided in Appendix F[1].	Re-prepare and analyze associated samples.	Analyst/Laboratory Area Supervisor	Accuracy	Same as Method/SOP QC Acceptance Limits.
MS/MSD	One is performed for each batch of up to 20 samples.	%Rs must meet the limits provided in the CompuChem QC Limits table provided in Appendix F[1] RPD between MS and MSD should be ≤ 30%.	If both the LCS and MS/MSD are unacceptable, re-prepare and analyze the associated samples and QC.	Analyst/Laboratory Area Supervisor	Accuracy	Same as Method/SOP QC Acceptance Limits.

Matrix	Groundwater, Aqueous QC/Soil
Analytical Group	SVOCs/PAH SIM
Analytical Method/SOP Reference	SW-846 8270D/2.5.2.7/2.4.4.5

QC Sample:	Frequency/Number	Method/SOP QC Acceptance Limits	Corrective Action	Person(s) Responsible for Corrective Action	Data Quality Indicator (DQI)	Measurement Performance Criteria
Surrogates	6 per sample Full Scan, 3 per sample SIM: Fluorobiphenyl Terphenyl-d14 2,4,6-Tribromophenol (Full Scan Only) 2-Fluorophenol Full Scan Only) Phenol-dd5 Full Scan Only) Nitrobenzene-d5	%Rs must meet the limits provided in the CompuChem QC Limits table provided in Appendix F[1]	(1) Re-prepare and reanalyze for confirmation of matrix interference when appropriate.	Analyst, Laboratory Supervisor and Data Validator	Accuracy/Bias	Same as Method/SOP QC Acceptance Limits.
IS	6 per sample - 1,4-Dichlorobenzene Naphthalene-d8 Acenapthene-d10 Phenanthrene-d10 chrysene-d12 Perylene-d12	RTs for ISs must be within ±30 seconds and the response areas must be within -50% to +100% of the last CCV for each IS.	Inspect mass spectrometer or gas chromatograph for malfunctions; mandatory reanalysis of samples analyzed while system was malfunctioning	Analyst, Laboratory Supervisor and Data Validator	Precision/ Accuracy/Bias	Same as Method/SOP QC Acceptance Limits.

1 Please note that limits are updated periodically and may change from the issuance of the final SAP to the time data validation is performed. The limits used for validation will be the limits that are current at the time of analysis.

Matrix	Groundwater, Aqueous QC/Soil
Analytical Group	PCBs
Analytical Method/SOP Reference	SW-846 8082A/2.2.5.3

QC Sample:	Frequency/Number	Method/SOP QC Acceptance Limits	Corrective Action	Person(s) Responsible for Corrective Action	Data Quality Indicator (DQI)	Measurement Performance Criteria
Method Blank	One is performed for each batch of up to 20 samples.	All target analyte concentrations must be <½ LOQ.	Re-prepare and analyze associated samples.	Analyst/Laboratory Director	Contamination/ Bias	Same as Method/SOP QC Acceptance Limits.
LCS	One is performed for each batch of up to 20 samples.	%Rs must meet the limits provided in the CompuChem QC Limits table provided in Appendix F[1].	Re-prepare and analyze associated samples.	Analyst/Laboratory Director	Accuracy	Same as Method/SOP QC Acceptance Limits.
MS/MSD	One is performed for each batch of up to 20 samples.	%Rs must meet the limits provided in the CompuChem QC Limits table provided in Appendix F[1] The RPD should be ≤ 30%.	Contact client for guidance.	Analyst/Laboratory Director	Accuracy	Same as Method/SOP QC Acceptance Limits.
Surrogates	1 per sample: Decachlorobiphenyl	%Rs must meet the limits provided in the CompuChem QC Limits table provided in Appendix F[1]	(1) Re-prepare and reanalyze for confirmation of matrix interference when appropriate.	Analyst/Laboratory Director	Accuracy/Bias	Same as Method/SOP QC Acceptance Limits.
Second Column Confirmation	All positive results must be confirmed.	Results between primary and second column must be RPD ≤ 40%. The higher if the two results will be reported unless matrix interference is apparent.	None. Apply qualifier if RPD >40% and discuss in the case narrative.	Analyst/Laboratory Director	Precision	Same as Method/SOP QC Acceptance Limits.

1 Please note that limits are updated periodically and may change from the issuance of the final SAP to the time data validation is performed. The limits used for validation will be the limits that are current at the time of analysis.

Matrix	Groundwater, Aqueous QC/Soil
Analytical Group	Pesticides
Analytical Method/SOP Reference	SW-846 8081B/2.2.4.10

QC Sample:	Frequency/Number	Method/SOP QC Acceptance Limits	Corrective Action	Person(s) Responsible for Corrective Action	Data Quality Indicator (DQI)	Measurement Performance Criteria
Method Blank	One is performed for each batch of up to 20 samples.	All target analyte concentrations must be <½ LOQ.	Re-prepare and analyze associated samples.	Analyst/Laboratory Director	Contamination/ Bias	Same as Method/SOP QC Acceptance Limits.
LCS	One is performed for each batch of up to 20 samples.	%Rs must meet the limits provided in the CompuChem QC Limits table provided in Appendix F[1].	Re-prepare and analyze associated samples.	Analyst/Laboratory Director	Accuracy	Same as Method/SOP QC Acceptance Limits.
MS/MSD	One is performed for each batch of up to 20 samples.	%Rs must meet the limits provided in the CompuChem QC Limits table provided in Appendix F[1] The RPD should be ≤ 30%.	Contact client for guidance.	Analyst/Laboratory Director	Accuracy	Same as Method/SOP QC Acceptance Limits.
Surrogates	2 per sample: Tetrachloro-m-xylenes Decachlorobiphenyl	%Rs must meet the limits provided in the CompuChem QC Limits table provided in Appendix F[1].	(1) Re-prepare and reanalyze for confirmation of matrix interference when appropriate.	Analyst, Laboratory Supervisor and Data Validator	Accuracy/Bias	Same as Method/SOP QC Acceptance Limits.
Second Column Confirmation	All positive results must be confirmed.	Results between primary and second column must be RPD ≤ 40%. The higher if the two results will be reported unless matrix interference is apparent.	None. Apply qualifier if RPD >40% and discuss in the case narrative.	Analyst/Laboratory Director	Precision	Same as Method/SOP QC Acceptance Limits.

1 Please note that limits are updated periodically and may change from the issuance of the final SAP to the time data validation is performed. The limits used for validation will be the limits that are current at the time of analysis.

Matrix	Groundwater, Aqueous QC/Soil
Analytical Group	Metals
Analytical Method/SOP Reference	SW-846 6010C/7470A/7471A/3.2.1.6; 3.3.4

QC Sample:	Frequency/Number	Method/SOP QC Acceptance Limits	Corrective Action	Person(s) Responsible for Corrective Action	Data Quality Indicator (DQI)	Measurement Performance Criteria
Method Blank	One is performed for each batch of up to 20 samples.	All target analyte concentrations must be <½ LOQ.	Re-prepare and analyze all associated samples.	Analyst/Laboratory Area Supervisor	Contamination/ Bias	Same as Method/SOP QC Acceptance Limits.
LCS	One is performed for each batch of up to 20 samples.	The percent recovery must be 80-120%.	Re-prepare and analyze all associated samples.	Analyst/Laboratory Area Supervisor	Accuracy	Same as Method/SOP QC Acceptance Limits.
MS	One is performed for each batch of up to 20 samples.	%Rs should be within 80-120%, if sample < 4x spike added.	Contact client for guidance.	Analyst/Laboratory Area Supervisor	Accuracy	Same as Method/SOP QC Acceptance Limits.
Laboratory Duplicate	One is performed for each batch of up to 20 samples.	The percent recovery should be 80-120% and the RPD ≤ 20%.	Contact client for guidance.	Analyst/Laboratory Area Supervisor	Accuracy/ Precision	Same as Method/SOP QC Acceptance Limits.
Serial Dilution	One is performed for each preparation batch with sample concentration(s) > 50x DL.	The result must agree within ± 10% of the original sample result.	Perform Post Digestion Spike	Analyst/Laboratory Area Supervisor	Accuracy/ Precision	Same as Method/SOP QC Acceptance Limits.
Post Digestion Spike (does not apply to Cold Vapor)	One is performed when serial dilution fails or analyte concentration(s) in all samples < 50x DL.	The result must agree within ± 25% of expected result.	Flag results of samples of same matrix as estimates in SDG narrative.	Analyst/Laboratory Area Supervisor	Accuracy/ Precision	Same as Method/SOP QC Acceptance Limits.

Matrix	Groundwater
Analytical Group	Alkalinity
Analytical Method/SOP Reference	EPA 310.2/3.5.1.1

QC Sample:	Frequency/Number	Method/SOP QC Acceptance Limits	Corrective Action	Person(s) Responsible for Corrective Action	Data Quality Indicator (DQI)	Measurement Performance Criteria
Method Blank	One per batch of up to 20 samples.	Analyte concentration <½ LOQ.	Correct problem, reprepare reanalyze along will associated samples.	Laboratory Area Supervisor	Contamination/ Bias	Same as Method/SOP QC Acceptance Limits.
LCS	One per batch of up to 20 samples.	%R must be between 90-110% of the expected value.	Correct problem, reprepare reanalyze along will associated samples.	Laboratory Area Supervisor	Accuracy	Same as Method/SOP QC Acceptance Limits.
MS/MSD	One per batch of up to 20 samples.	%R must be between 75-125% of the expected value. The RPD must be ≤ 20%.	Contact client for guidance.	Laboratory Area Supervisor	Accuracy	Same as Method/SOP QC Acceptance Limits.

Matrix	Groundwater
Analytical Group	TDS
Analytical Method/SOP Reference	SM 2540C/3.5.19.2

QC Sample:	**Frequency/Number**	**Method/SOP QC Acceptance Limits**	**Corrective Action**	**Person(s) Responsible for Corrective Action**	**Data Quality Indicator (DQI)**	**Measurement Performance Criteria**
Method Blank	One per batch of up to 20 samples.	The method blank must measure less than 10 mg/L of filterable residue.	Reanalyze batch	Laboratory Area Supervisor	Contamination/ Bias	Same as Method/SOP QC Acceptance Limits.
LCS	One per batch of up to 20 samples.	Acceptance limit is 90 - 110% of the true value.	Reanalyze batch	Laboratory Area Supervisor	Accuracy	Same as Method/SOP QC Acceptance Limits.
Duplicate Sample	One per batch of up to 20 samples.	The sample and the duplicate should agree within 5% of the average weight.	Quality Assurance (QA) notice is required.	Laboratory Area Supervisor	Precision	Same as Method/SOP QC Acceptance Limits.

Matrix	Groundwater and Soil
Analytical Group	TOC
Analytical Method/SOP Reference[2]	SM 5310B and Walkley Black/3.6.2.1

QC Sample:	**Frequency/Number**	**Method/SOP QC Acceptance Limits**	**Corrective Action**	**Person(s) Responsible for Corrective Action**	**Data Quality Indicator (DQI)**	**Measurement Performance Criteria**
Method Blank	One per batch of up to 20 samples.	Analyte concentration <½ LOQ	Reprepare and reanalyze with associated samples.	Laboratory Area Supervisor	Contamination/ Bias	Same as Method/SOP QC Acceptance Limits.
LCS	One every 10 samples.	%Rs must be between 90-110% of the expected value.	Reprepare and reanalyze with associated samples.	Laboratory Area Supervisor	Accuracy	Same as Method/SOP QC Acceptance Limits.
MS/MSD	One per batch of up to 20 samples.	%R must be between 75-125% of the expected value. The RPD must be ≤ 20%.	Contact client for guidance.	Laboratory Area Supervisor	Accuracy	Same as Method/SOP QC Acceptance Limits.

SAP Worksheet #29 -- Project Documents and Records Table

(UFP-QAPP Manual Section 3.5.1)

Document	Where Maintained
Field Documents Field Logbook Field Sample Forms Chain of Custody Records Air Bills Sampling Instrument Calibration Logs Sampling Notes Photographs FTMR Forms This SAP HASP	Field documents will be maintained in the project file located in the Tetra Tech Pittsburgh office.
Laboratory Documents Sample receipt, custody, and tracking record Equipment calibration logs Sample preparation logs Analysis Run logs CA forms Reported field sample results Reported results for standards, QC checks, and QC samples Extraction/clean-up records Raw data	Laboratory documents will be included in the hardcopy and portable documents format deliverables from the laboratory. Laboratory data deliverables will be maintained in the Tetra Tech Pittsburgh project file and in long-term data package storage at a third-party professional document storage firm. Electronic data results will be maintained in a database on a password protected SQL server.
Assessment Findings Field Sampling Audit Checklist (if conducted) Analytical Audit Checklist (if conducted) Data Validation Memoranda (includes tabulated data summary forms)	All assessment documents will be maintained in the Tetra Tech Pittsburgh office.
Reports RI Report	All reports will be stored in hardcopy in the Tetra Tech Pittsburgh project file and electronically in the server library.

SAP Worksheet #30 -- Analytical Services Table

Matrix	Analytical Group	Sample Locations/ID Numbers	Analytical Method	Data Package Turnaround Time	Laboratory / Organization (name and address, contact person and telephone number)	Backup Laboratory / Organization (name and address, contact person and telephone number)
Groundwater and Soil	VOCs	See Worksheet 18	SW-846 8260B	21 calendar days	Cathy Dover CompuChem 501 Madison Avenue Cary, North Carolina 27513 (919) 379-4089 cdover@compuchemlabs.com	NA
	SVOCs and PAHs		SW-846 8270D and 8270D SIM			
	Pesticides		SW-846 8081B			
	PCBs		SW-846 8082A			
	Metals (total and dissolved)		SW-846 6010B/7470A/ 7471A			
Soil	pH	See worksheet 18	SW-846 9045C9045D	21 calendar days	Cathy Dover CompuChem 501 Madison Avenue Cary, North Carolina 27513 (919) 379-4089 cdover@compuchemlabs.com	NA
	TOC		SW-846 9060Walkley Black			
Groundwater	TDS	See Worksheet 18	SM 2540C	21 calendar days	Cathy Dover CompuChem 501 Madison Avenue Cary, North Carolina 27513 (919) 379-4089 cdover@compuchemlabs.com	NA
	TOC		SM 50310B			
	Alkalinity		EPA 310.2			

SAP Worksheet #31 -- Planned Project Assessments Table

(UFP-QAPP Manual Section 4.1.1)

Assessment Type	Frequency	Internal or External	Organization Performing Assessment	Person(s) Responsible for Performing Assessment (title and organizational affiliation)	Person(s) Responsible for Responding to Assessment Findings (title and organizational affiliation)	Person(s) Responsible for Identifying and Implementing Corrective Actions (CA) (title and organizational affiliation)	Person(s) Responsible for Monitoring Effectiveness of CA (title and organizational affiliation)
Laboratory System Audit[1]	Every 2 years	External	DoD ELAP Accrediting Body	DoD ELAP Accrediting Body Auditor	Laboratory QA Manager or Laboratory Manager, CompuChem	Laboratory QAM or Laboratory Manager, CompuChem	Laboratory QAM or Laboratory Manager, CompuChem

1 CompuChem has successfully completed the laboratory evaluation process required as part of the Department of Defense (DoD) QSM. The DOD ELAP accreditation is included in Appendix E.

SAP Worksheet #32 -- Assessment Findings and Corrective Action Responses

(UFP-QAPP Manual Section 4.1.2)

Assessment Type	Nature of Deficiencies Documentation	Individual(s) Notified of Findings (name, title, organization)	Timeframe of Notification	Nature of CA Response Documentation	Individual(s) Receiving CA Response (name, title, organization)	Timeframe for Response
Laboratory System Audit	Written audit report	Virginia Zusman and Svetlana Izosimova, Laboratory QAM, CompuChem	Specified by DOD ELAP Accrediting Body	Letter	DOD ELAP Accrediting Body	Specified by DOD ELAP Accrediting Body

1 Audits are scheduled at the Tetra Tech program level and may or may not include this project.

SAP Worksheet #33 -- QA Management Reports Table

(UFP QAPP Manual Section 4.2)

Type of Report	Frequency (daily, weekly monthly, quarterly, annually, etc.)	Projected Delivery Date(s)	Person(s) Responsible for Report Preparation (title and organizational affiliation)	Report Recipient(s) (title and organizational affiliation)
Data validation report	Per sample delivery group (SDG)	Within 3 weeks of receipt of laboratory data	Tetra Tech DVM or designee	Tetra Tech PM, project file
Major analysis problem identification (Internal Memorandum)	When persistent analysis problems are detected	Immediately upon detection of problem	Tetra Tech CLEAN QAM	Tetra Tech PM, CLEAN QAM, Program Manager, and project file
Project monthly progress report	Monthly for duration of the project	Monthly	Tetra Tech PM	DON, project file
Laboratory QA Report	When significant plan deviations result from unanticipated circumstances	Immediately upon detection of problem	Laboratory PM	Tetra Tech PM, project file

SAP Worksheet #34 -- Verification (Step I) Process Table

(UFP-QAPP Manual Section 5.2.1)

Verification Input	Description	Internal / External	Responsible for Verification (name, organization)
Chain-of-custody forms	The Tetra Tech FOL or designee will review and sign the chain-of-custody form to verify that all samples listed are included in the shipment to the laboratory and the sample information is accurate. The forms will be signed by the sampler and a copy will be retained for the project file, the Tetra Tech PM, and the Tetra Tech Data Validators. See Tetra Tech SOP SA-6.3.	Internal	Sampler and FOL, Tetra Tech
	The Laboratory Sample Custodian will review the sample shipment for completeness, integrity, and sign accepting the shipment. The Tetra Tech Data Validators will check that the chain-of-custody form was signed/dated by the Tetra Tech FOL or designee relinquishing the samples and also by the Laboratory Sample Custodian receiving the samples for analyses.	Internal/ External	1 - Laboratory Sample Custodian, CompuChem 2 - Data Validators, Tetra Tech
SAP Sample Tables/ Chain-of-Custody Forms	Verify that all proposed samples listed in the SAP tables have been collected.	Internal	FOL or designee, Tetra Tech
Sample Log Sheets	Verify that information recorded in the log sheets is accurate and complete.	Internal	FOL or designee, Tetra Tech
Sample Coordinates	Verify that actual sample locations are correct and in accordance with the SAP proposed locations. Document any discrepancies in the final report.	Internal	PM, FOL, or designee, Tetra Tech
SAP/ Field Logs/ Analytical Data Packages	Ensure that all sampling SOPs were followed. Verify that deviations have been documented and MPCs have been achieved. Particular attention should be given to verify that samples were correctly identified, that sampling location coordinates are accurate, and that documentation establishes an unbroken trail of documented chain-of-custody from sample collection to report generation. Verify that the correct sampling and analytical methods/SOPs were applied. Verify that the sampling plan was implemented and carried out as written and that any deviations are documented.	Internal	PM or designee, Tetra Tech
SAP/ Laboratory SOPs/ Raw Data/ Applicable Control Limits Tables	Ensure that all laboratory SOPs were followed. Verify that the correct analytical methods/SOPs were applied. Establish that all method QC samples were analyzed and in control as listed in the analytical SOPs. If method QA is not in control, the Laboratory QAM will contact the Tetra Tech PM via telephone or e-mail for guidance prior to report preparation.	Internal	Laboratory QAM, CompuChem
SAP/ Chain-of-Custody Forms	Check that field QC samples listed in Worksheet #20 were collected as required.	Internal	FOL or designee, Tetra Tech
Analytical Data Packages	All analytical data packages will be verified internally for completeness by the laboratory performing the work. The Laboratory QAM will sign the case narrative for each data package.	Internal	Laboratory QAM, CompuChem

Verification Input	Description	Internal / External	Responsible for Verification (name, organization)
Electronic Data Deliverables (EDDs)/ Analytical Data Packages	Each EDD will be verified against the chain-of-custody and hard copy data package for accuracy and completeness. Laboratory analytical results will be verified and compared to the electronic analytical results for accuracy. Sample results will be evaluated for laboratory contamination and will be qualified for false positives using the laboratory method/preparation blank summaries. Positive results reported between the DL and the LOQ will be qualified as estimated. Extraneous laboratory qualifiers will be removed from the validation qualifier.	External	Data Validators, Tetra Tech
	Each data package will be verified for completeness by the Tetra Tech Data Validator. Missing information will be requested by the Tetra Tech Data Validator from the Laboratory PM.	External	Data Validators, Tetra Tech
SAP/ Laboratory SOPs/ Raw Data/ Applicable Control Limits Tables	Ensure that all laboratory SOPs were followed. Verify that the correct analytical methods/SOPs were applied. Establish that all method QC samples were analyzed and in control as listed in the analytical SOPs. If method QA is not in control, the Laboratory QAM will contact the Tetra Tech PM via telephone or e-mail for guidance prior to report preparation.	Internal	Laboratory QAM, CompuChem

SAP Worksheet #35 -- Validation (Steps IIa and IIb) Process Table

(UFP-QAPP Manual Section 5.2.2) (Figure 37, page 110 UFP-QAPP Manual) (Table 9 UFP-QAPP Manual)

Step IIa / IIb	Validation Input	Description	Responsible for Validation (name, organization)
IIa	Chain-of-Custody Forms	Custody - Ensure that the custody and integrity of the samples was maintained from collection to analysis and the custody records are complete and any deviations are recorded. Review that the samples were shipped and stored at the required temperature and sample pH for chemically-preserved samples meet the requirements listed in Worksheet #19. Ensure that the analyses were performed within the holding times listed in Worksheet #19.	Project Chemist or Data Validators, Tetra Tech
IIa/IIb	SAP/ Laboratory Data Packages/ EDDs	Accuracy - Ensure that the laboratory QC samples listed in Worksheet #28 were analyzed and that the MPCs listed in Worksheet #12 were met for all field samples and QC analyses. Check that specified field QC samples were collected and analyzed and that the analytical QC criteria set up for this project were met.	Project Chemist or Data Validators, Tetra Tech
		Precision - Check the field sampling precision by calculating the RPD for field duplicate samples. Check the laboratory precision by reviewing the RPD or percent difference values from laboratory duplicate analyses; MS/MSDs; and LCS/laboratory control sample duplicate (LCSD), if available. Ensure compliance with the methods and project MPCs accuracy goals listed in Worksheet #12.	
		Representativeness - Check that the laboratory recorded the temperature at sample receipt and the pH of the chemically preserved samples to ensure sample integrity from sample collection to analysis.	
		Completeness - Review the chain-of-custody forms generated in the field to ensure that the required analytical samples have been collected, appropriate sample identifications have been used, and correct analytical methods have been applied. The Tetra Tech Data Validator will verify that elements of the data package required for validation are present, and if not, the laboratory will be contacted and the missing information will be requested. Validation will be performed as per Worksheet #36. Check that all data have been transferred correctly and completely to the final Structured Query Language (SQL) database.	

SAP Worksheet #35 -- Validation (Steps IIa and IIb) Process Table (Continued)

Step IIa / IIb	Validation Input	Description	Responsible for Validation (name, organization)
IIb	SAP/ Laboratory Data Packages/ EDDs	Sensitivity - Ensure that the project LOQs listed in Worksheet #15 were achieved.	Project Chemist or Data Validators, Tetra Tech
		PSLs - Discuss the impact on reported DLs due to matrix interferences or sample dilutions performed because of the high concentration of one or more other contaminants, on the other target compounds reported as non-detected. Document this usability issue and inform the Tetra Tech PM. Review and add PSLs to the laboratory EDDs. Flag samples and notify the Tetra Tech PM of samples that exceed PSLs listed in Worksheet #15.	
		QA/QC - Ensure that all QC samples specified in the SAP were collected and analyzed and that the associated results were within prescribed SAP acceptance limits. Ensure that QC samples and standards prescribed in analytical SOPs were analyzed and within the prescribed control limits. If any significant QC deviations occur, the Laboratory QAM shall have contacted the Tetra Tech PM.	
		Deviations - Summarize deviations from methods, procedures, or contracts in the Data Validation Report. Determine the impact of any deviation from sampling or analytical methods and SOPs requirements and matrix interferences effect on the analytical results. Qualify data results based on method or QC deviation and explain all the data qualifications. Print a copy of the project database qualified data depicting data qualifiers and data qualifiers codes that summarize the reason for data qualifications. Determine if the data met the MPCs and determine the impact of any deviations on the technical usability of the data.	

SAP Worksheet #36 –Analytical Data Validation (Steps IIa and IIb) Summary Table

(UFP-QAPP Manual Section 5.2.2.1) (Figure 37, page 110 UFP-QAPP Manual)

Step IIa / IIb	Matrix	Analytical Group	Validation Criteria	Data Validator (title and organizational affiliation)
IIa and IIb	Groundwater and Soil	VOCs, SVOCs, PAHs, Pesticides, and PCBs	SW-846 8260B , 8270D/SIM, 8081B, 8082A, 8015C method specific criteria, DOD QSM, and those criteria listed in Worksheets #12, #15, #24, and #28. If not included in Worksheet #12, #15, #24 or #28, the logic outlined in USEPA Contract Laboratory Program National Functional Guidelines for Organic Data Review EPA-540/R-99-008, October 1999 will be used to apply qualifiers to data to the extent possible.	Tetra Tech Data Validation Specialist
IIa and IIb	Groundwater and Soil	Metals	SW-846 6010C, and 7470A/7471A method specific criteria, DOD QSM, and those listed in Worksheets #12, #15, #24, and #28. If not included in Worksheet #12, #15, #24, and #28 and the logic outlined in USEPA Contract Laboratory Program National Functional Guidelines for Inorganic Data Review EPA 540-R-04-004, October 2004 will be used to apply qualifiers to data to the extent possible.	Tetra Tech Data Validation Specialist
IIa and IIb	Groundwater	TDS, Alkalinity, and TOC	Method-specific criteria listed in Worksheets #12, #15, #24, and #28.	Tetra Tech Data Validation Specialist
IIa and IIb	Soil	pH and TOC	Method specific criteria listed in worksheets #12, #15, #24, and #28	Tetra Tech Data Validation Specialist

SAP Worksheet #37 -- Usability Assessment

(UFP-QAPP Manual Section 5.2.3)

Data Usability Assessment

Usability of the data directly affects whether project objectives can be achieved. The following characteristics will be evaluated at a minimum and the results of the evaluations of these characteristics will be included in the project report. The characteristics will be evaluated for multiple concentration levels if the evaluator determines that this is necessary. To the extent required by the type of data being reviewed, the assessors will consult with other experienced individuals to render sound technical assessments of these data characteristics:

Completeness

For each matrix that was scheduled to be sampled, the FOL acting on behalf of the Project Team will prepare a table comparing planned samples and analyses to samples actually collected and analyses actually performed. If deviations are identified, the Tetra Tech PM and risk assessor will determine whether the deviations compromise the ability to meet project objectives. If they do, the Tetra Tech PM will consult with the Navy RPM and other project team members, as necessary (determined by the Navy RPM), to develop appropriate corrective actions.

Precision

The Project Chemist acting on behalf of the Project Team will determine whether precision goals for field duplicates and laboratory duplicates were met. This will be accomplished by comparing duplicate results to precision goals identified in Worksheets #s 12 and 28. This will also include a comparison of field and laboratory precision with the expectation that field duplicate results will be no less precise than laboratory duplicate results. If the goals are not met, or data have been flagged as estimated (J qualifier), limitations on the use of the data will be discussed in the project report.

Accuracy

The Project Chemist acting on behalf of the Project Team will determine whether the accuracy/bias goals were met for project data. This will be accomplished by comparing percent recoveries of LCS, LCSD, MS, MSD, and surrogate compounds to accuracy goals identified in Worksheet # 28. This assessment will include an evaluation of field and laboratory contamination; instrument calibration variability; and analyte recoveries for surrogates, matrix spike, and laboratory control samples. If the goals are not met, limitations on the use of the data will be described in the project report. Bias of the qualified results and a description of the impact of identified non-compliances on a specific data package or on the overall project data will be described in the project report.

Representativeness

A Project Scientist identified by the Tetra Tech PM and acting on behalf of the Project Team will determine whether the data are adequately representative of intended populations, both spatially and temporally. This will be accomplished by verifying that samples were collected and processed for analysis in accordance with the SAP, by reviewing spatial and temporal data variations, and by comparing these characteristics to expectations. The usability report will describe the representativeness of the data for each matrix and analytical fraction. This will not require quantitative comparisons unless professional judgment of the project scientist indicates that a quantitative analysis is required.

Comparability

The Project Chemist acting on behalf of the Project Team will determine whether the data generated under this project are sufficiently comparable to historical site data generated by different methods and for samples collected using different procedures and under different site conditions. This will be accomplished by comparing overall precision and bias among data sets for each matrix and analytical fraction. This will not require quantitative comparisons unless professional judgment of the Project Chemist indicates that such quantitative analysis is required.

Sensitivity

The Project Chemist acting on behalf of the Project Team will determine whether project sensitivity goals listed in Worksheet #15 are achieved. If sensitivity goals are not achieved, the limitations on the data will be described. The Project Chemist will enlist the help of the project risk assessor to evaluate deviations from planned sensitivity goals. Special attention will be paid to the effect on attainment of project objectives in cases where quantitation or detection limits are less than PALs.

Project Assumptions and Data Outliers

The Tetra Tech PM and designated team members will evaluate whether project assumptions were valid. This will typically be a qualitative evaluation but may be supported by quantitative evaluations. The type of evaluation depends on the assumption being tested. Quantitative assumptions include assumptions related to data distributions (e.g., normal or log-normal) and estimates of data variability. Potential outliers will be removed if a review of the associated documentation indicates that the results have an assignable cause that renders them inconsistent with the remainder of the data. During this evaluation, the team will consider whether outliers could be indications of unanticipated site conditions.

Describe the evaluative procedures used to assess overall measurement error associated with the project:

After completion of data validation, the data and data quality will be reviewed to determine whether sufficient data of acceptable quality are available for decision making. In addition to the evaluations described earlier, a series of inspections and statistical analyses will be performed to estimate these characteristics. The statistical evaluations will include simple summary statistics for target analytes, such as maximum concentration, minimum concentration, number of samples with non-detected results, number of samples with detected results, and the proportion of samples with detected and non-detected results. The Project Team members identified by the Tetra Tech PM will assess whether the data collectively support the attainment of project objectives. They will consider whether any missing or rejected data have compromised the ability to make decisions or to make the decisions with the desired level of confidence. The data will be evaluated to determine whether missing or rejected data can be compensated for with other data. Although rejected data will generally not be used, there may be reason to use them in a weight-of-evidence argument, especially when they supplement data that have not been rejected. If rejected data are used, their use will be supported by technically defensible rationales.

For statistical comparisons and mathematical manipulations, non-detected values will be represented by a concentration equal to one-half the sample-specific reporting limit. Duplicate results (original and duplicate) will not be averaged for the purpose of representing the range of concentrations. However, the average of the original and duplicate samples will be used to represent the concentration at a particular sampled location.

Duplicate results (original and duplicate) will not be averaged for the purpose of representing the range of concentrations. However, the average of the original and duplicate samples will be used to represent the concentration at a particular sampled location.

Identify the personnel responsible for performing the usability assessment:

The Tetra Tech PM, Tetra Tech Project Chemist, Tetra Tech FOL, and Tetra Tech Project Scientist will be responsible for conducting the data usability assessments. The data usability assessment will be reviewed with the Navy, USEPA, and SCDHEC RPMs. The review will take place either in a face-to-face meeting or a teleconference depending on the extent of identified deficiencies. If no significant deficiencies are identified, the data usability assessment will simply be documented in the project report and reviewed during the normal document review cycle.

Describe the documentation that will be generated during usability assessment and how usability assessment results will be presented so that they identify trends, relationships (correlations), and anomalies:

The data will be presented in tabular format, including data qualifications such as estimation (J, UJ) or rejection (R). Written documentation will support use of non-compliant estimated or rejected data results. Results flagged as rejected during data validation will only be used qualitatively or semi-quantitatively at the discretion of the risk assessor. The project report will identify and describe the data usability limitations and suggest resampling or other corrective actions, if necessary.

REFERENCES

B&R Environmental (Brown and Root Environmental), 1998. Master Work Plan for MCRD Parris Island, South Carolina, Volumes I, II and III.

Tetra Tech, July 2002. Draft Site Inspection/Confirmatory Sampling Report for Site/SWMU 4, Site/SWMU 5, Site/SWMU 7, Site 9/SWMU 8, Site 13C/SWMU 13, Site/SWMU 16, SWMU 27, and SWMU 35, for Marine Corps Recruit Depot, Parris Island, South Carolina.

Tetra Tech, August 2004. Preliminary Assessment/Site Investigation and Confirmatory Sampling Report for Site/SWMU 55 Fiber Optic Vault, Marine Corps Recruit Depot, Parris Island, South Carolina.

Tetra Tech, June 2009. Conceptual Site Model, Site 27, Equipment Parade Deck, MCRD Parris Island, South Carolina.

USEPA (United States Environmental Protection Agency), 2001. Supplemental Guidance to RAGs: Region 4 Bulletin, Ecological Risk Assessment. Originally published November 1995. Website version last updated November 30, 2001 at http://www.epa.gov/region4/wasteots/ecolbul.htm

USEPA, November 2002. OSWER Draft Guidance for Evaluating the Vapor Intrusion to Indoor Air Pathway from Groundwater and Soils (Subsurface Vapor Intrusion Guidance), EPA-530-D-02-004.

USEPA, December 2002. Guidance for Quality Assurance Project Plans, EPA QA/G-5, Office of Environmental Information, EPA/240/R-02/009, Washington, D.C.

U.S. Environmental Protection Agency; U.S. Department Of Defense; and U.S. Department of Energy (March 2005). Uniform Federal Policy for Quality Assurance Plans (UFP-QAPP). EPA-505-B-04-900A; DTIC ADA 427785. Washington, D.C.

USEPA, February 2006. Guidance on Systematic Planning Using the Data Quality Objectives Process (EPA QA/G-4). Office of Environmental Information, EPA/240/B-06/001, Washington, D.C.

USEPA, 2009. USEPA Ecological Soil Screening Levels available at http://www.epa.gov./ecotox/ecossl.

USEPA, December 2009. Regional Screening Levels for Chemicals at Superfund Sites. http://epa-prgs.ornl.gov/chemicals/index.shtml.

TABLE 10-1

WATER LEVEL MEASUREMENTS
SEPTEMBER 26, 2007
SITES 27 AND 55
MCRD PARRIS ISLAND, SOUTH CAROLINA

Well Number	Installation Date	Ground Elevation (feet above msl)	Top of Riser Elevation (feet above msl)	Water Level Information 2007		
				Date Measured	Depth to Water (feet below Top of Riser)	Elevation (feet above msl)
SHALLOW WELLS						
Permanent Monitoring Wells Installed in December 2002[1]						
PAI-27-MW03S	12/11/2002	13.38	13.24	9/26/2007	5.78	7.46
PAI-27-MW04S	12/12/2002	14.08	13.87	9/26/2007	6.55	7.32
PAI-27-MW06S	12/16/2002	14.97	17.84	9/26/2007	9.76	8.08
PAI-27-MW09S	12/10/2002	15.34	15.07	9/26/2007	7.73	7.34
PAI-27-MW14S	12/13/2002	13.96	16.79	9/26/2007	9.55	7.24
PAI-27-MW16S	12/11/2002	11.43	11.25	9/26/2007	7.46	3.79
Permanent Monitoring Wells Installed in December 2002[2]						
PAI-27-MW01S	12/11/2002	12.14	15.02	9/26/2007	7.05	7.97
PAI-27-MW10S	12/12/2002	12.73	15.60	9/26/2007	9.42	6.18
PAI-27-MW11S	12/14/2002	15.28	18.12	9/26/2007	11.33	6.79
PAI-27-MW17S	12/11/2002	NA[3]	12.50	9/26/2007	NM	NM
PAI-27-MW19S	12/10/2002	NA[3]	11.59	9/26/2007	4.43	7.16
PAI-27-MW20S	12/11/2002	7.28	9.98	9/26/2007	6.12	3.86
PAI-27-MW21S	12/11/020	7.62	10.44	9/26/2007	6.42	4.02
Temporary Monitoring Wells Installed in September 2007[1]						
PAI-27-TW-22S	9/21/2007	10.79	12.27	9/26/2007	4.91	7.36
PAI-27-TW-24S	9/21/2007	11.72	12.88	9/26/2007	5.31	7.57
PAI-27-TW-26S	9/20/2007	14.70	16.43	9/26/2007	9.28	7.15
PAI-27-TW-28S	9/20/2007	11.98	13.07	9/26/2007	6.32	6.75
PAI-27-TW-30S	9/19/2007	11.51	12.43	9/26/2007	5.78	6.65
PAI-27-TW-33S	9/21/2007	13.10	13.95	9/26/2007	6.03	7.92
PAI-27-TW-35S	9/21/2007	11.83	13.84	9/26/2007	7.47	6.37
PAI-27-TW-37S	9/21/2007	12.87	13.17	9/26/2007	6.13	7.04
PAI-27-TW-39S	9/20/2007	13.94	NA[4]	9/26/2007	9.08	4.86
PAI-27-TW-41S	9/20/2007	7.55	8.77	9/26/2007	3.82	4.95
PAI-27-TW-43S	9/19/2007	9.36	9.88	9/26/2007	3.39	6.49
PAI-27-TW-46S	9/20/2007	14.12	15.87	9/26/2007	9.06	6.81
INTERMEDIATE WELLS						
Permanent Monitoring Wells Installed in December 2002[1]						
PAI-27-MW02I	12/17/2002	11.85	14.69	9/26/2007	7.77	6.92
PAI-27-MW05I	12/13/2002	13.97	13.81	9/26/2007	7.99	5.82
PAI-27-MW15I	12/13/2002	13.96	16.71	9/26/2007	9.71	7.00
Permanent Monitoring Wells Installed in December 2002[2]						
PAI-27-MW07I	12/16/2002	15.26	18.12	9/26/2007	10.70	7.42
PAI-27-MW12I	12/13/2002	15.37	18.15	9/26/2007	10.73	7.42
PAI-27-MW18I	12/12/2002	NA[3]	12.44	9/26/2007	NM	NM

TABLE 10-1

WATER LEVEL MEASUREMENTS
SEPTEMBER 26, 2007
SITES 27 AND 55
MCRD PARRIS ISLAND, SOUTH CAROLINA

Well Number	Installation Date	Ground Elevation (feet above msl)	Top of Riser Elevation (feet above msl)	Water Level Information 2007		
				Date Measured	Depth to Water (feet below Top of Riser)	Elevation (feet above msl)
INTERMEDIATE WELLS						
Temporary Monitoring Wells Installed in September 2007(1)						
PAI-27-TW-23I	9/21/2007	10.86	11.88	9/26/2007	4.68	7.20
PAI-27-TW-25I	9/21/2007	15.30	15.85	9/26/2007	8.58	7.27
PAI-27-TW-27I	9/20/2007	14.80	15.75	9/26/2007	8.67	7.08
PAI-27-TW-29I	9/20/2007	12.10	13.11	9/26/2007	6.37	6.74
PAI-27-TW-31I	9/19/2007	11.47	11.87	9/26/2007	5.32	6.55
PAI-27-TW-32I	9/20/2007	11.30	11.77	9/26/2007	7.97	3.80
PAI-27-TW-34I	9/21/2007	13.07	13.87	9/26/2007	7.13	6.74
PAI-27-TW-36I	9/21/2007	11.85	12.39	9/26/2007	6.15	6.24
PAI-27-TW-38I	9/21/2007	12.97	13.22	9/26/2007	6.51	6.71
PAI-27-TW-40I	9/20/2007	13.95	14.53	9/26/2007	8.60	5.93
PAI-27-TW-42I	9/20/2007	7.55	7.97	9/26/2007	NM(5)	NM(5)
PAI-27-TW-44I	9/19/2007	9.44	10.02	9/26/2007	7.17(6)	2.85(6)
PAI-27-TW-47I	9/20/2007	14.09	15.21	9/26/2007	8.27	6.94
DEEP WELLS						
Permanent Monitoring Wells Installed in December 2002(2)						
PAI-27-MW08D	12/17/2002	15.38	18.16	9/26/2007	15.11	3.05
PAI-27-MW13D	12/18/2002	15.23	18.06	9/26/2007	14.90	3.16

NA - Not Available
NM - Not Measured
msl - mean sea level

1 - Ground Elevations and Top of Riser Elevations for these Monitoring Wells installed in December 2002 were obtained from a licensed surveyor in October 2007. Ground Elevations for Temporary Monitoring Wells were also obtained from a licensed surveyor in October 2007. Top of Riser Elevations for Temporary Monitoring Wells were calculated by adding length of riser to Ground Elevations.
2 - Ground Elevations and Top of Riser Elevations for these Monitoring Wellls installed in December 2002 were not obtained from a licensed surveyor; consequently a margin of error may exist. Ground Elevations, Top of Riser Elevations, and Water Levels are approximate. Ground Elevations obtained by subtracting length of riser from Top of Riser Elevations (Table 3-2 - TtNUS, November 2003).
3 - Riser length not reported. Therefore, Ground Elevation could not be determined.
4 - Length of riser not indicated on Temporary Monitoring Well Sheet, Top of Riser Elevation not available. Depth to Water assumed to be from Ground Surface.
5 - Depth to Water not measured because water levels in monitoring well had not recoverd.
6 - Depth to Water may be approximate because water levels in monitoring well may not have completely recovered.

TABLE 10-2

WATER LEVEL MEASUREMENTS
SITES 27 AND 55
MCRD PARRIS ISLAND, SOUTH CAROLINA

Well Number	Installation Date	Ground Elevation (feet above msl)	Top of Riser Elevation (feet above msl)	2008 - High Tide (1015 hrs)				2008 - Low Tide (1627 hrs)		
				Date Measured	Depth to Product (feet below Top of Riser)	Depth to Water (feet below Top of Riser)	Elevation (feet above msl)	Depth to Product (feet below Top of Riser)	Depth to Water (feet below Top of Riser)	Elevation (feet above msl)
SHALLOW WELLS										
Permanent Monitoring Wells Installed in December 2002[1]										
PAI-27-MW03S	12/11/2002	13.38	13.24	8/18/2008		6.06	7.18		6.03	7.21
PAI-27-MW04S	12/12/2002	14.08	13.87	8/18/2008		6.95	6.92		6.95	6.92
PAI-27-MW06S	12/16/2002	14.97	17.84	8/18/2008		10.67	7.17		10.66	7.18
PAI-27-MW09S	12/10/2002	15.34	15.07	8/18/2008		NM	NM		NM	NM
PAI-27-MW14S	12/13/2002	13.96	16.79	8/18/2008		9.99	6.80		9.98	6.81
PAI-27-MW16S	12/11/2002	11.43	11.25	8/18/2008		7.82	3.43		7.83	3.42
Permanent Monitoring Wells Installed in December 2002[2]										
PAI-27-MW01S	12/11/2002	12.14	15.02	8/18/2008		7.16	7.86		7.16	7.86
PAI-27-MW10S	12/12/2002	12.73	15.60	8/18/2008		9.80	5.80		10.12	5.48
PAI-27-MW11S	12/14/2002	15.28	18.12	8/18/2008	11.05	11.48	6.64	11.06	11.52	6.60
PAI-27-MW17S	12/11/2002	NA[3]	12.50	8/18/2008		4.87	7.63		4.89	7.61
PAI-27-MW19S	12/10/2002	NA[3]	11.59	8/18/2008		4.93	6.66		4.91	6.68
PAI-27-MW20S	12/11/2002	7.28	9.98	8/18/2008		6.64	3.34		6.72	3.26
PAI-27-MW21S	12/11/020	7.62	10.44	8/18/2008		7.02	3.42		7.13	3.31
Permanent Monitoring Wells Installed in August 2008[1]										
PAI-27-MW49S	8/8/2008	13.49	13.24	8/18/2008		6.79	6.45		6.79	6.45
PAI-27-MW51S	8/9/2008	10.31	10.05	8/18/2008		2.37	7.68		2.40	7.65
PAI-27-MW53S	8/9/2008	13.85	13.67	8/18/2008		8.63	5.04		8.83	4.84
PAI-27-MW55S	8/7/2008	6.92	10.11	8/18/2008		7.67	2.44		7.71	2.40
PAI-27-MW57S	8/8/2008	7.38	7.20	8/18/2008		3.01	4.19		3.07	4.13
PAI-27-MW58S	8/8/2008	7.69	7.44	8/18/2008		2.64	4.80		2.63	4.81
PAI-27-MW62S	8/7/2008	6.67	9.94	8/18/2008		7.12	2.82		7.25	2.69
PAI-27-MW63S	8/10/2008	14.26	16.95	8/18/2008		11.31	5.64		11.30	5.65
PAI-27-MW64S	8/10/2008	14.36	16.91	8/18/2008		9.76	7.15		9.77	7.14

TABLE 10-2

WATER LEVEL MEASUREMENTS
SITES 27 AND 55
MCRD PARRIS ISLAND, SOUTH CAROLINA

Well Number	Installation Date	Ground Elevation (feet above msl)	Top of Riser Elevation (feet above msl)	2008 - High Tide (1015 hrs)				2008 - Low Tide (1627 hrs)		
				Date Measured	Depth to Product (feet below Top of Riser)	Depth to Water (feet below Top of Riser)	Elevation (feet above msl)	Depth to Product (feet below Top of Riser)	Depth to Water (feet below Top of Riser)	Elevation (feet above msl)
INTERMEDIATE WELLS										
Permanent Monitoring Wells Installed in December 2002[1]										
PAI-27-MW02I	12/17/2002	11.85	14.69	8/18/2008		11.99[4]	2.70		8.15	6.54
PAI-27-MW05I	12/13/2002	13.97	13.81	8/18/2008		7.56	6.25		7.47	6.34
PAI-27-MW15I	12/13/2002	13.96	16.71	8/18/2008		10.14	6.57		10.17	6.54
Permanent Monitoring Wells Installed in December 2002[2]										
PAI-27-MW07I	12/16/2002	15.26	18.12	8/18/2008		11.09	7.03		11.10	7.02
PAI-27-MW12I	12/13/2002	15.37	18.15	8/18/2008		11.15	7.00		11.17	6.98
PAI-27-MW18I	12/12/2002	NA[3]	12.44	8/18/2008		7.03	5.41		6.87	5.57
Permanent Monitoring Wells Installed in August 2008[1]										
PAI-27-MW48I	8/9/2008	15.23	14.98	8/18/2008		8.26	6.72		8.32	6.66
PAI-27-MW50I	8/8/2008	13.46	13.23	8/18/2008		6.85	6.38		6.85	6.38
PAI-27-MW52I	8/9/2008	10.25	10.00	8/18/2008		6.79	3.21		6.76	3.24
PAI-27-MW54I	8/9/2008	13.82	13.57	8/18/2008		8.61	4.96		8.80	4.77
PAI-27-MW56I	8/7/2008	6.91	9.97	8/18/2008		7.09	2.88		7.09	2.88
PAI-27-MW59I	8/8/2008	7.68	7.33	8/18/2008		2.61	4.72		2.60	4.73
PAI-27-MW60I	8/10/2008	12.19	14.66	8/18/2008		9.93	4.73		9.92	4.74
PAI-27-MW61I	8/10/2008	14.54	14.13	8/18/2008		8.35	5.78		8.34	5.79
DEEP WELLS										
Permanent Monitoring Wells Installed in December 2002[2]										
PAI-27-MW08D	12/17/2002	15.38	18.16	8/18/2008		15.74	2.42		15.70	2.46
PAI-27-MW13D	12/18/2002	15.23	18.06	8/18/2008		15.59	2.47		15.52	2.54

NA - Not Available
NM - Not measured
msl - mean sea level

1 - Ground Elevations and Top of Riser Elevations for these Monitoring Wells installed in December 2002 were obtained from a licensed surveyor in October 2007. Ground Elevations and Top of Riser Elevations for Monitoring Wells installed in August 2008 were obtained from a licensed surveyor in in September 2008.

2 - Ground Elevations and Top of Riser Elevations for these Monitoring Wells installed in December 2002 were not obtained from a licensed surveyor; consequently, a margin of error may exist. Ground Elevations, Top of Riser Elevations, and Water Levels are approximate. Ground Elevations obtained by subtracting length of riser from Top of Riser Elevations (Table 3-2 - TtNUS, November 2003).

3 - Riser length not reported. Therefore, Ground Elevation could not be determined.

4 - Depth to Water may be approximate because water levels in monitoring well may not have completely recovered. Well was under pressure when water levels were measured.

P:\GIS\MCRD_PARRISISLAND\PROPOSED_PLAN.APR AREA OF INVESTIGATION LAYOUT 03/18/09 JEE

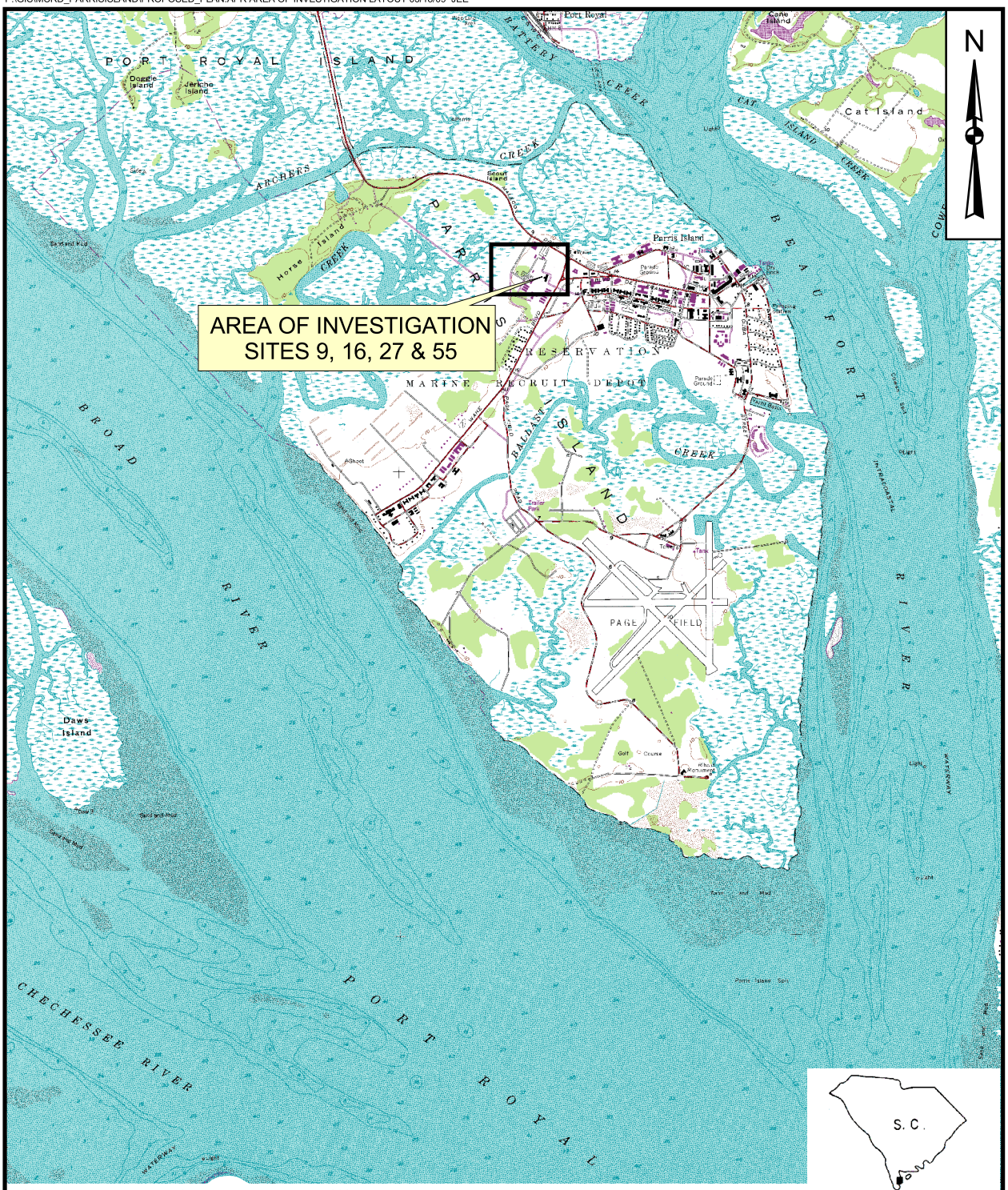

5000 0 5000 Feet

SOURCE: USGS 7.5 MINUTE
PARRIS ISLAND QUADRANGLE, 1979.

DRAWN BY K. MOORE	DATE 11/16/06	DEPOT & SITE LOCATION MAP MCRD PARRIS ISLAND, SOUTH CAROLINA	CONTRACT NUMBER 0039
CHECKED BY G. ZIMMERMAN	DATE 03/18/09		APPROVED BY ___ DATE ___
COST/SCHEDULE-AREA			APPROVED BY ___ DATE ___
SCALE AS NOTED			DRAWING NO. FIGURE 10-1 / REV 0

NAVFAC

P:\GIS\PARRISISLAND_MCRD\APR\PROPOSED_PLAN.APR SITES 9/16/27/55 SITE FEATURES LAYOUT 4/21/10 KM

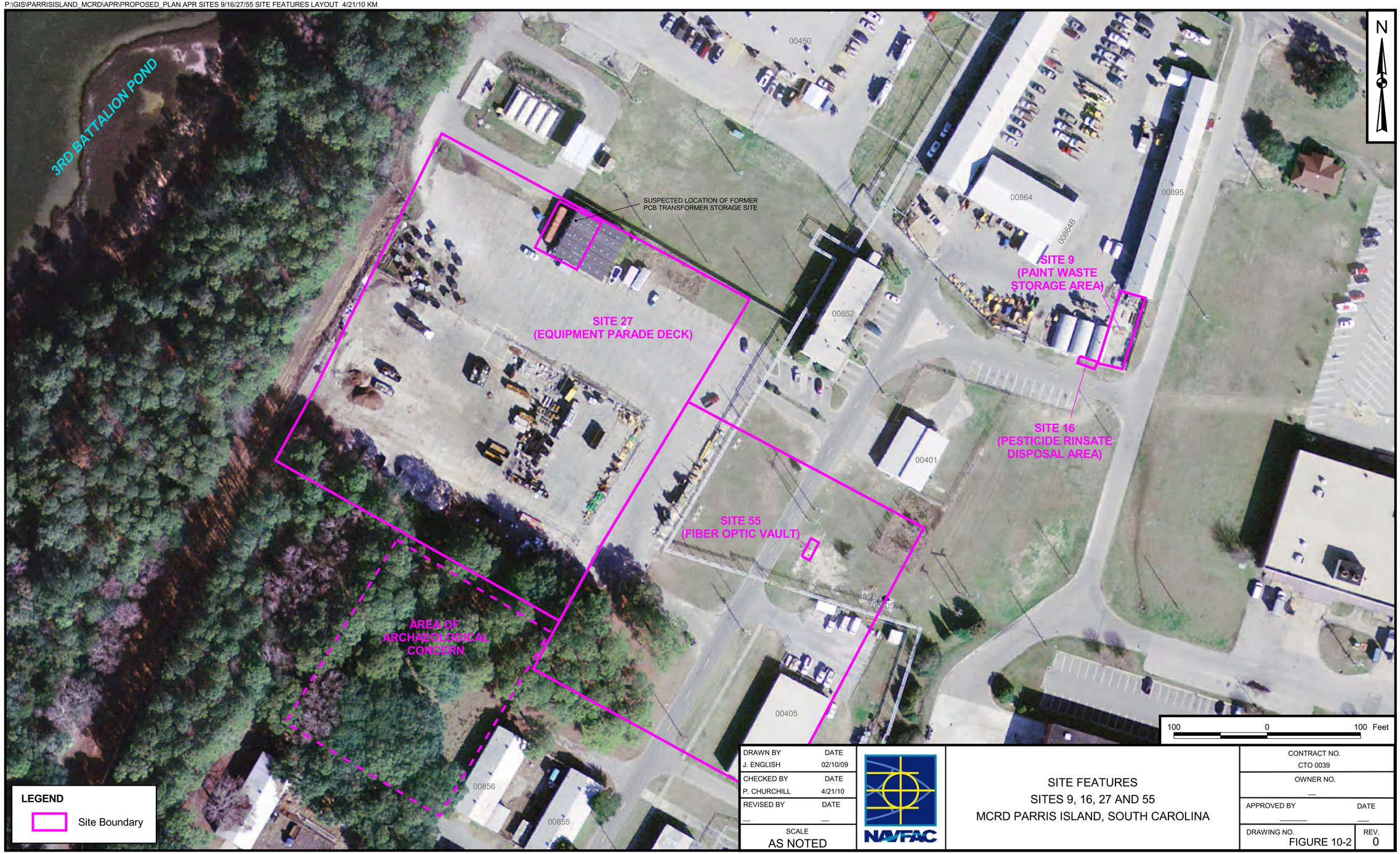

DRAWN BY	DATE
J. ENGLISH	02/10/09
CHECKED BY	DATE
P. CHURCHILL	4/21/10
REVISED BY	DATE
—	—
SCALE	
AS NOTED	

NAVFAC

SITE FEATURES
SITES 9, 16, 27 AND 55
MCRD PARRIS ISLAND, SOUTH CAROLINA

CONTRACT NO.	
CTO 0039	
OWNER NO.	
—	
APPROVED BY	DATE
	—
DRAWING NO.	REV.
FIGURE 10-2	0

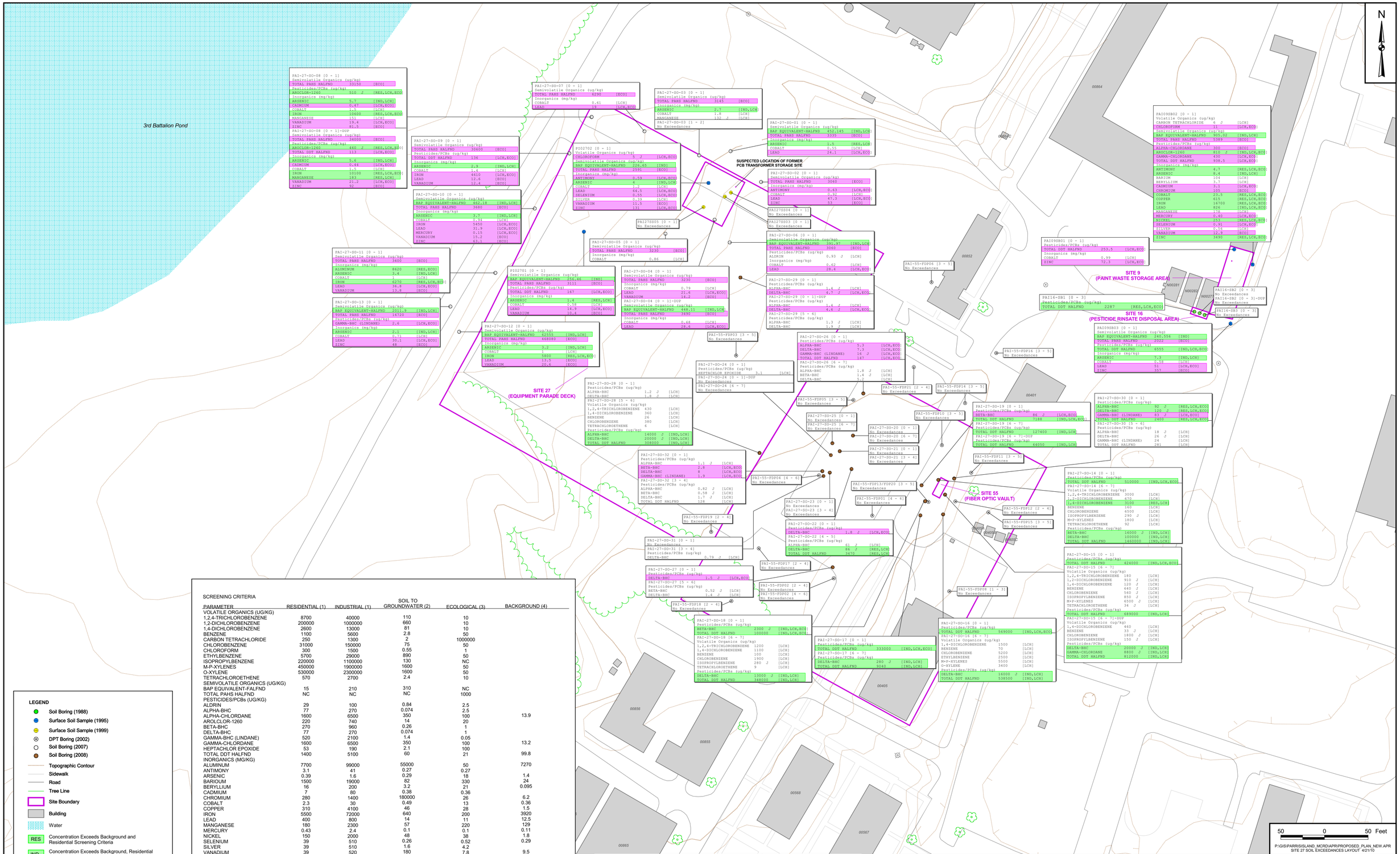

SCREENING CRITERIA

PARAMETER	RESIDENTIAL (1)	INDUSTRIAL (1)	SOIL TO GROUNDWATER (2)	ECOLOGICAL (3)	BACKGROUND (4)
VOLATILE ORGANICS (UG/KG)					
1,2,4-TRICHLOROBENZENE	8700	40000	110	10	
1,2-DICHLOROBENZENE	200000	1000000	660	10	
1,4-DICHLOROBENZENE	2600	13000	81	10	
BENZENE	1100	5600	2.8	50	
CARBON TETRACHLORIDE	250	1300	2	1000000	
CHLOROBENZENE	31000	150000	75	50	
CHLOROFORM	300	1500	0.55	1	
ETHYLBENZENE	5700	29000	890	50	
ISOPROPYLBENZENE	220000	1100000	130	NC	
M-P-XYLENES	450000	1900000	1600	50	
O-XYLENE	530000	2300000	1600	50	
TETRACHLOROETHENE	570	2700	2.4	10	
SEMIVOLATILE ORGANICS (UG/KG)					
BAP EQUIVALENT-FALFND	15	210	310	NC	
TOTAL PAHS HALFND	NC	NC	NC	1000	
PESTICIDES/PCBs (UG/KG)					
ALDRIN	29	100	0.84	2.5	
ALPHA-BHC	77	270	0.074	2.5	
ALPHA-CHLORDANE	1600	6500	350	100	13.9
AROLCLOR-1260	220	740	14	20	
BETA-BHC	270	960	0.26	1	
DELTA-BHC	77	270	0.074	1	
GAMMA-BHC (LINDANE)	520	2100	1.4	0.05	
GAMMA-CHLORDANE	1600	6500	350	100	13.2
HEPTACHLOR EPOXIDE	53	190	2.1	100	
TOTAL DDT HALFND	1400	5100	60	21	99.8
INORGANICS (MG/KG)					
ALUMINUM	7700	99000	55000	50	7270
ANTIMONY	3.1	41	0.27	0.27	
ARSENIC	0.39	1.6	0.29	18	1.4
BARIOUM	1500	19000	82	330	24
BERYLLIUM	16	200	3.2	21	0.095
CADMIUM	7	80	0.38	0.36	
CHROMIUM	280	1400	180000	26	6.2
COBALT	2.3	30	0.49	13	0.36
COPPER	310	4100	46	28	1.5
IRON	5500	72000	640	200	3920
LEAD	400	800	14	11	12.5
MANGANESE	180	2300	57	220	129
MERCURY	0.43	2.4	0.1	0.1	0.11
NICKEL	150	2000	48	38	1.8
SELENIUM	39	510	0.26	0.52	0.29
SILVER	39	510	1.6	4.2	
VANADIUM	39	520	180	7.8	9.5
ZINC	2300	31000	680	46	9.7

Parameters that were detected but did not exceed screening criteria included 1,3-dichlorobenzene, 2-butanone, acetone, carbon disulfide,cyclohexane, methyl cyclohexane, toluene, total xylenes, endosulfan II, and heptachlor.

LEGEND

- Soil Boring (1988)
- Surface Soil Sample (1995)
- Surface Soil Sample (1999)
- DPT Boring (2002)
- Soil Boring (2007)
- Soil Boring (2008)
- Topographic Contour
- Sidewalk
- Road
- Tree Line
- Site Boundary
- Building
- Water
- RES — Concentration Exceeds Background and Residential Screening Criteria
- IND — Concentration Exceeds Background, Residential and Industrial Screening Criteria
- LCH — Concentration Exceeds Background and Soil to Groundwater Screening Criteria
- ECO — Concentration Exceeds Background and Ecological Screening Criteria

Notes:
1) Regional Screening Levels for Superfund Sites (Residential or Industrial). USEPA, May 2009.
2) Regional Screening Levels for Superfund Sites (Soil to Groundwater - MCL or Risk-Based). USEPA, May 2009.
3) USEPA Ecological Soil Screening Levels (Eco-SSLs) (http://www.epa.gov/ecotox/ecossl) or USEPA, Region 4 Ecological Screening Values (http://www.epa.gov/region4/waste/ots/ecolbul.htm) (2001).
4) Background/Typical Facility Pesticide Concentration.

DRAWN BY S. STROZ	DATE 10/27/09
CHECKED BY P. CHURCHILL	DATE 4/21/10
	DATE
SCALE AS NOTED	

NAVFAC

SOIL EXCEEDANCES
SITE 27 - EQUIPMENT PARADE DECK
MCRD PARRIS ISLAND, SOUTH CAROLINA

CONTRACT NO.
OWNER NO.
APPROVED BY DATE
DRAWING NO. FIGURE 10-3
REV. 0

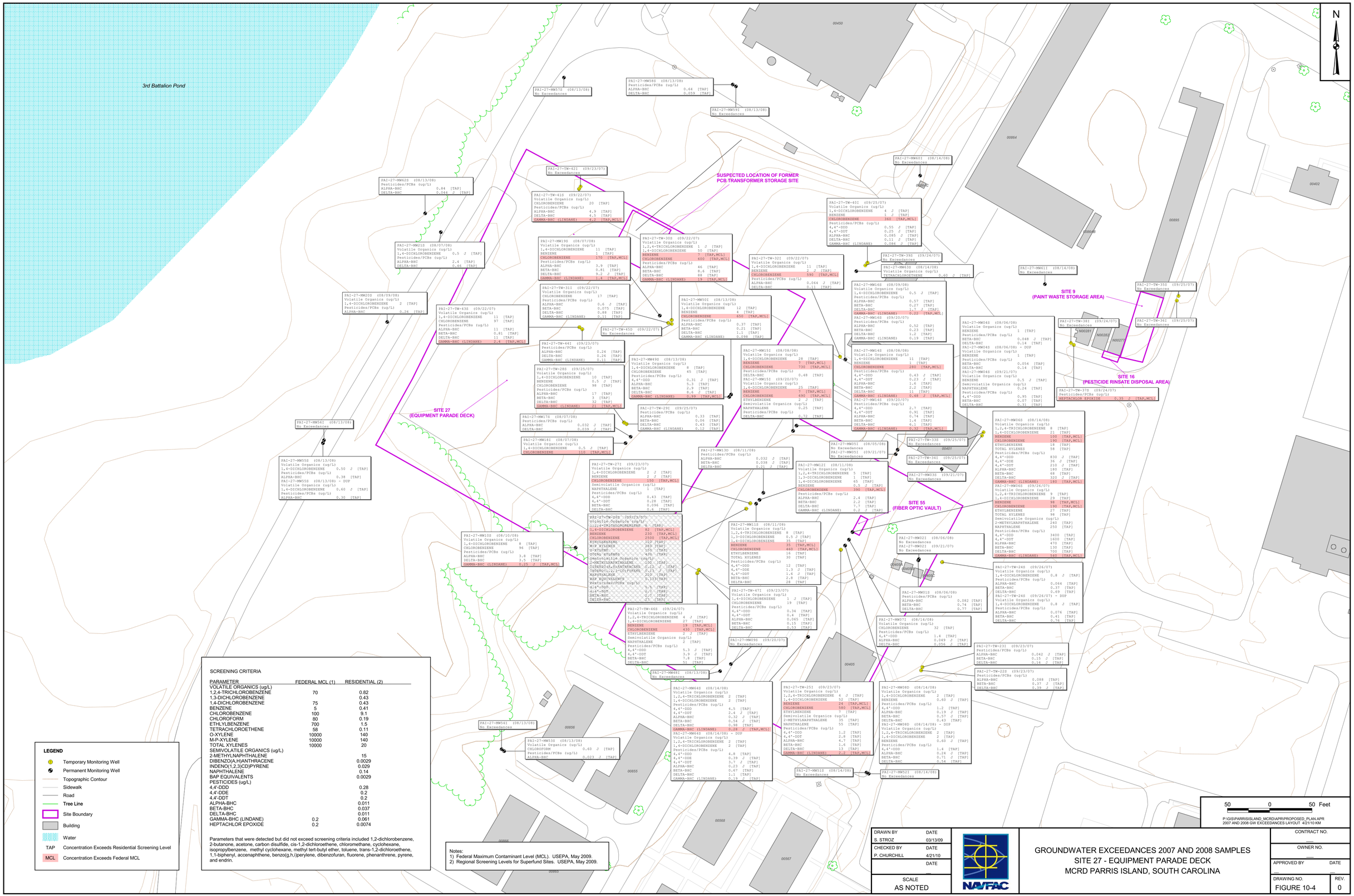

SCREENING CRITERIA

PARAMETER	FEDERAL MCL (1)	RESIDENTIAL (2)
VOLATILE ORGANICS (ug/L)		
1,2,4-TRICHLOROBENZENE	70	0.82
1,3-DICHLOROBENZENE		0.43
1,4-DICHLOROBENZENE	75	0.43
BENZENE	5	0.41
CHLOROBENZENE	100	9.1
CHLOROFORM	80	0.19
ETHYLBENZENE	700	1.5
TETRACHLOROETHENE	58	0.11
O-XYLENE	10000	140
M-P-XYLENE	10000	140
TOTAL XYLENES	10000	20
SEMIVOLATILE ORGANICS (ug/L)		
2-METHYLNAPHTHALENE		15
DIBENZO(A,H)ANTHRACENE		0.0029
INDENO(1,2,3)CD)PYRENE		0.029
NAPHTHALENE		0.14
BAP EQUIVALENTS		0.0029
PESTICIDES (ug/L)		
4,4'-DDD		0.28
4,4'-DDE		0.2
4,4'-DDT		0.2
ALPHA-BHC		0.011
BETA-BHC		0.037
DELTA-BHC		0.011
GAMMA-BHC (LINDANE)	0.2	0.061
HEPTACHLOR EPOXIDE	0.2	0.0074

Parameters that were detected but did not exceed screening criteria included 1,2-dichlorobenzene, 2-butanone, acetone, carbon disulfide, cis-1,2-dichloroethene, chloromethane, cyclohexane, isopropylbenzene, methyl cyclohexane, methyl tert-butyl ether, toluene, trans-1,2-dichloroethene, 1,1-biphenyl, accenaphthene, benzo(g,h,i)perylene, dibenzofuran, fluorene, phenanthrene, pyrene, and endrin.

LEGEND

- Temporary Monitoring Well
- Permanent Monitoring Well
- Topographic Contour
- Sidewalk
- Road
- Tree Line
- Site Boundary
- Building
- Water
- TAP — Concentration Exceeds Residential Screening Level
- MCL — Concentration Exceeds Federal MCL

Notes:
1) Federal Maximum Contaminant Level (MCL). USEPA, May 2009.
2) Regional Screening Levels for Superfund Sites. USEPA, May 2009.

50 0 50 Feet

P:\GIS\PARRISISLAND_MCRD\APR\PROPOSED_PLAN.APR
2007 AND 2008 GW EXCEEDANCES LAYOUT 4/21/10 KM

DRAWN BY	DATE
S. STROZ	03/13/09
CHECKED BY	DATE
P. CHURCHILL	4/21/10
	DATE
SCALE	
AS NOTED	

NAVFAC

GROUNDWATER EXCEEDANCES 2007 AND 2008 SAMPLES
SITE 27 - EQUIPMENT PARADE DECK
MCRD PARRIS ISLAND, SOUTH CAROLINA

CONTRACT NO.
OWNER NO.
APPROVED BY DATE
DRAWING NO. FIGURE 10-4
REV. 0

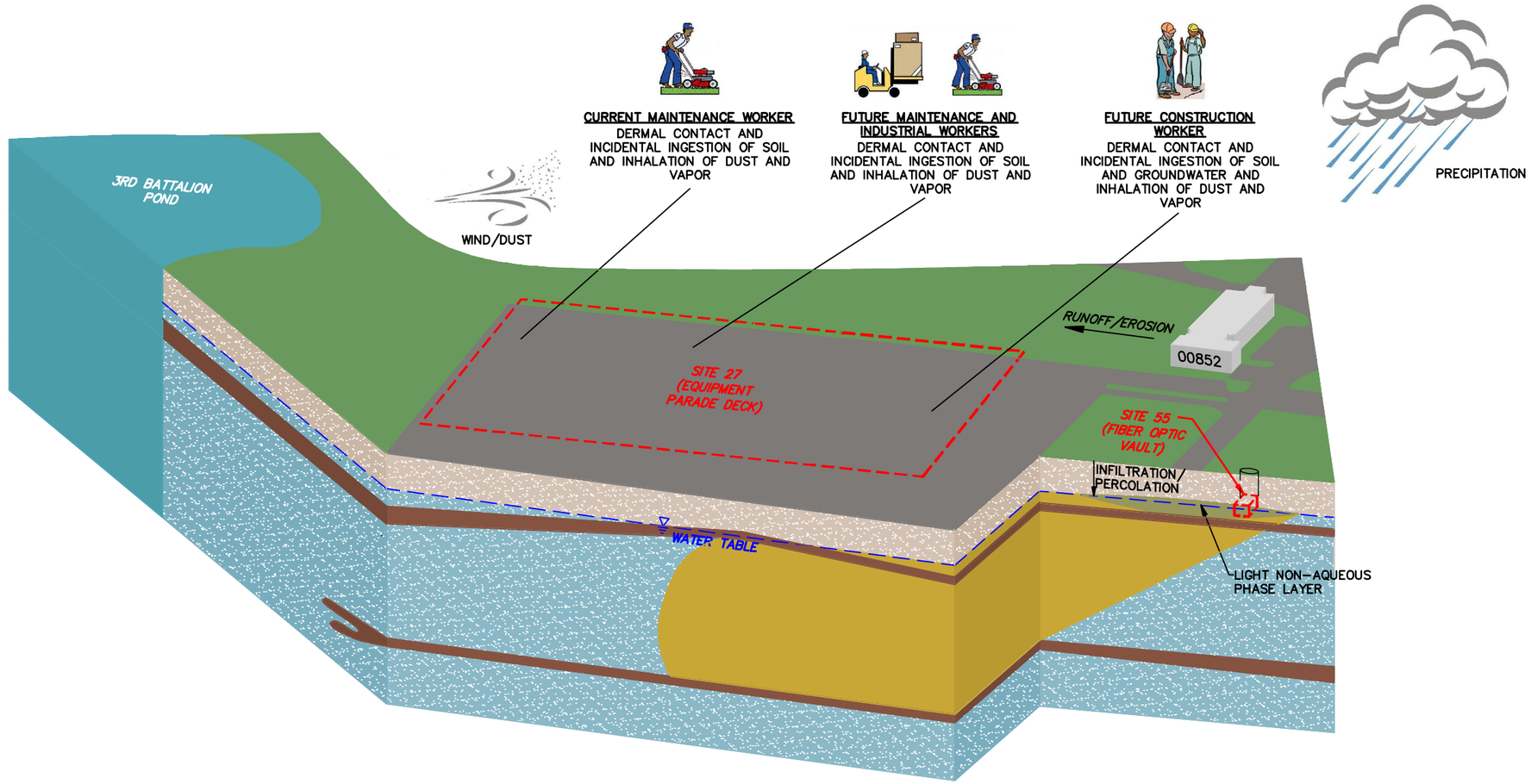

LEGEND

- WATER TABLE
- SAND
- WATER BEARING ZONE
- CLAY
- GROUND WATER CONTAMINATION

DRAWN BY CK	DATE 3/29/10	CONCEPTUAL SITE MODEL SITE 27 – EQUIPMENT PARADE DECK MCRD PARRIS ISLAND PARRIS ISLAND, SOUTH CAROLINA	CONTRACT NO. 2406
CHECKED BY	DATE		OWNER NO.
REVISED BY	DATE		APPROVED BY / DATE
SCALE NOT TO SCALE			DRAWING NO. FIGURE 10–5 / REV. 0

R:\2406\CSM\2406CSM02.dwg PIT CARLY.KRAMER 4/22/2010 9:23:05 AM

ACAD: 0455CX05.dwg 04/23/10 CK

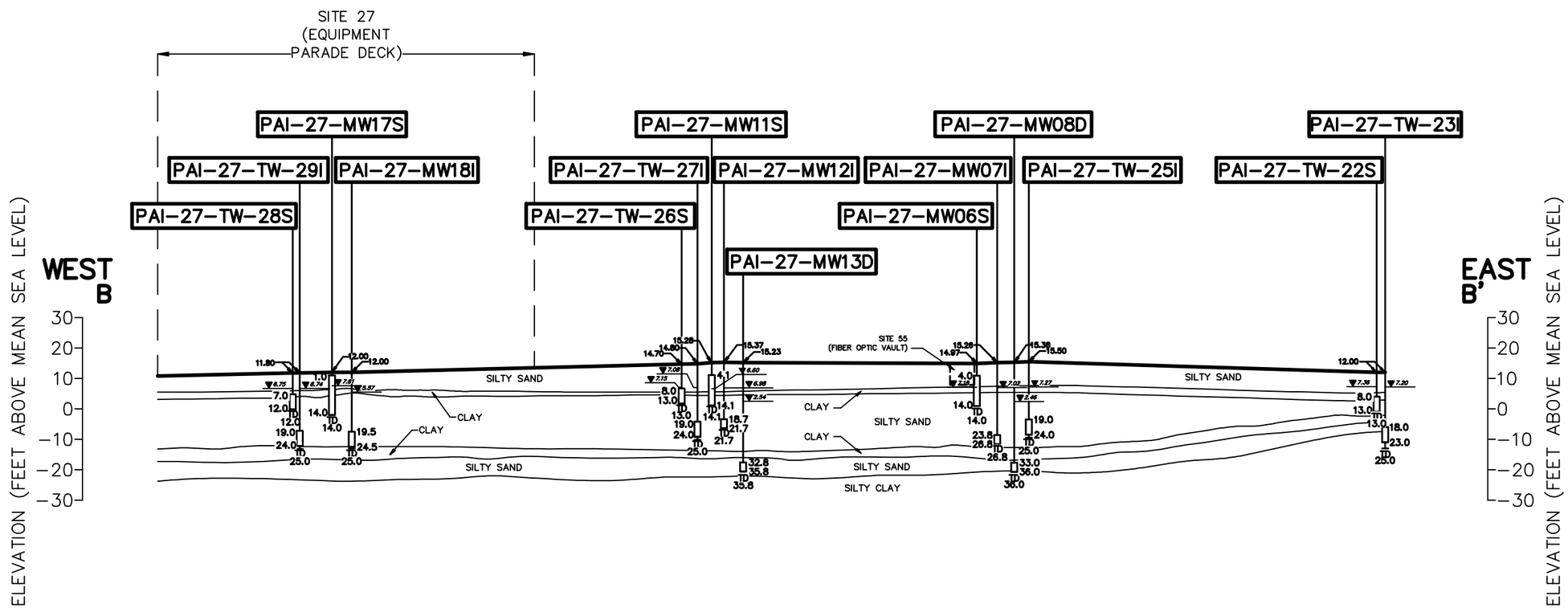

LEGEND:

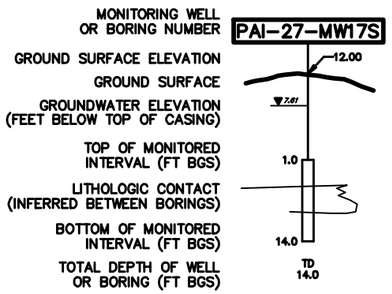

0 60 120
HORIZONTAL SCALE IN FEET

0 40 80
VERTICAL SCALE IN FEET

NOTES:
1,) TEMPORARY WELL (TW) WATER LEVELS MEASURED 9/07.
2.) MONITORING WELL (MW) WATER LEVELS MEASURED AT LOW TIDE 8/08.

DRAWN BY CK	DATE 4/23/10	NAVFAC	CROSS SECTION B–B' SITEE 27 – EQUIPMENT PARADE DECK MCRD PARRIS ISLAND, SOUTH CAROLINA
CHECKED BY	DATE		
REVISED BY	DATE		
SCALE AS NOTED			

CONTRACT NO. 0455	
OWNER NO.	
APPROVED BY	DATE
DRAWING NO. FIGURE 10–6	REV. 0

P:\GIS\PARRISISLAND_MCRD\MAPDOCS\MXD\PROPOSED_LOCS_VARIOUS_SITES.MXD 5/26/10 SS

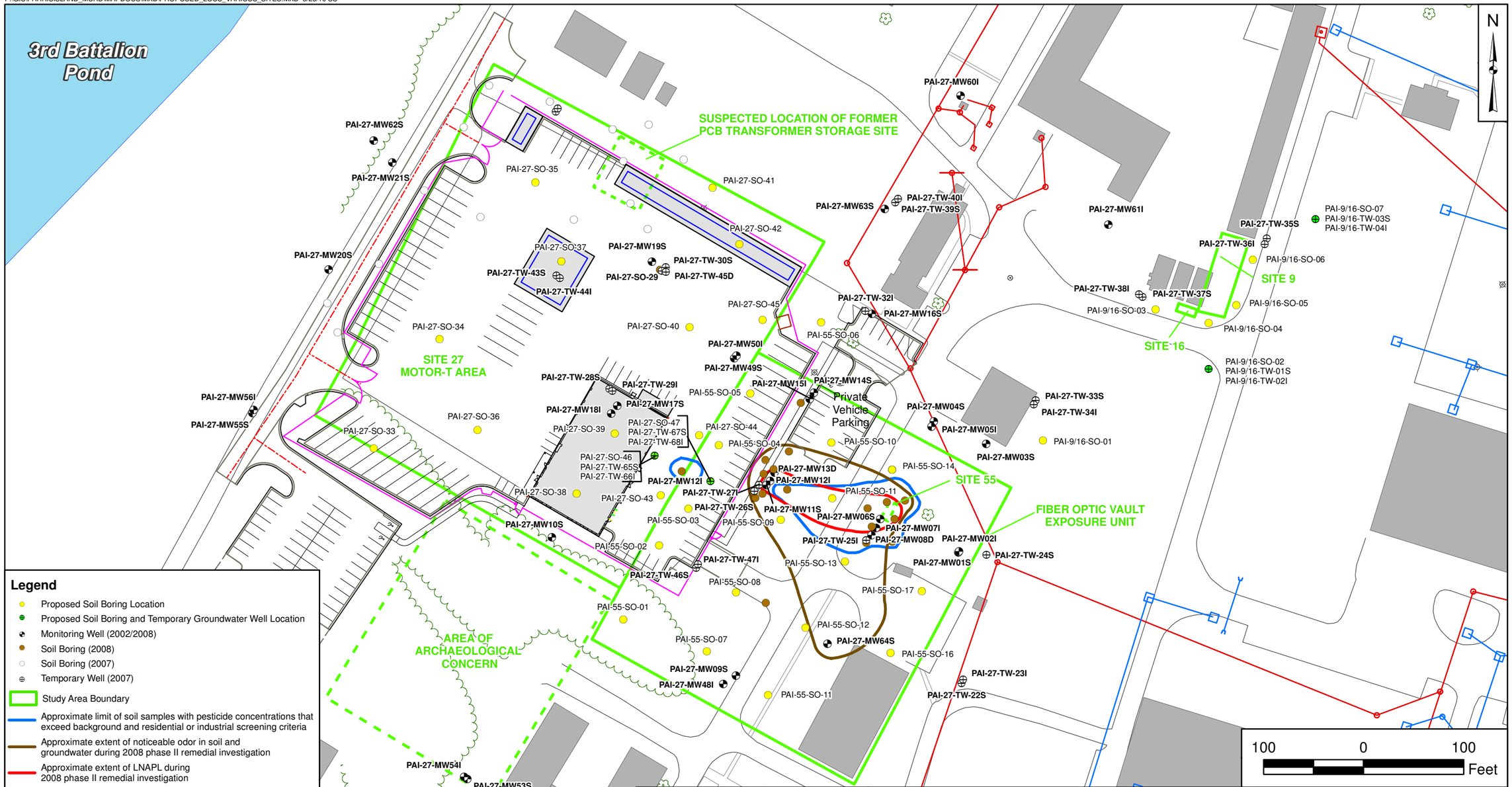

DRAWN BY	DATE
S. STROZ	05/20/10
CHECKED BY	DATE
P. SMITH	05/26/10
COST/SCHEDULE-AREA	
SCALE AS NOTED	

NAVFAC

PROPOSED SAMPLE LOCATIONS
SITES 9, 16, 27, AND 55
MCRD PARRIS ISLAND, SOUTH CAROLINA

CONTRACT NUMBER	
APPROVED BY	DATE
APPROVED BY	DATE
FIGURE NO. FIGURE 17-1	REV 0

APPENDIX A

DRAFT MEETING MINUTES

MCRD PARRIS ISLAND PARTNERING MEETING

SEPTEMBER 15 - 16, 2009

APRIL 27 - 28, 2010

MCRD PARRIS ISLAND PARTNERING MEETING
September 15-16, 2009
Columbia, SC

Leader: Charles Cook Time Keeper: Annie Gerry Scribe: Libby Claggett

Members Present:	Meredith Amick	SCDHEC
	Charles Cook	NAVFAC SE
	Annie Gerry	SCDHEC
	Tim Harrington	MCRD PI
	Lila Llamas	USEPA
	Mac McRae	TechLaw, Inc.
	Heber Pittman	MCRD PI
	Mark Sladic	Tetra Tech, Pittsburgh
	Kelly Taylor	CH2M Hill
	Pat Franklin	The Management Edge, Facilitator
	Libby Claggett	Tetra Tech, Jacksonville, Scribe
Guests:	Joe Bowers	SCDHEC
	Susan Byrd	SCDHEC
	Peggy Churchill	Tetra Tech, Cocoa
	Stacey French	SCDHEC, Tier II Link
	Greg Zimmerman	Tetra Tech, Pittsburgh

Meeting Start Time: 8:30 a.m.

1.1 Check-in, Agenda Modifications/Additions, Ground Rules, Parking Lot Review, Action Item Review

Action Items Developed September 1, 2009

Item	Responsible	Action Item	Due Date
09.09.cc1	Tetra Tech, the Navy, and the Depot	Work together to set timelines for Site 27 for an EE/CA scenario and an RI scenario and bring to the September 2009 meeting. **Agenda Item**	Sep 15, 2009

Action Items Developed July 14-15, 2009

Item	Responsible	Action Item	Due Date
07.09.1.2	Team	Team members to provide Pat with roles/responsibilities of agencies during Team meetings.	Done
07.09.1.4.1	Lila	Check with Gina to see what was done in the past at Camp Lejeune regarding outfall sampling.	Done
07.09.1.4.2	Meredith	Check with other project managers as how to be consistent with what was done at other facilities regarding outfall sampling.	Done
07.09.2.2.1	Charles	Forward the letter from the LNAPL contractor for Site 27 to Team members.	Done
07.09.2.2.2	Team	Review and comment on the Site 27 CSM as soon as feasibly possible.	Done

07.09.2.2.3	Mark	Arrange a conference call with the Team after receiving CSM comments and before the September meeting to review CSM comments and the DQOs for Site 27. The agenda for the September meeting will also be discussed.	Done
07.09.2.2.4	Lila	Resend comments on path forward for Site 27 to Mark.	Done
07.09.2.2.4	Mark	Prepare a revised path forward for Site 27 addressing EPA's comments.	Done
07.09.2.2.5	Mark	Arrange a conference call between the Navy, Tetra Tech, and the LNAPL contractor on Tuesday, July 21.	Done
07.09.2.3.1	Annie	Check if monitoring well requests need to be submitted on government letterhead or not. They need to be submitted to Richard Haynes.	Done
07.09.2.3.2	Mark	Send a hard copy of the Site 27 CSM to Scott Huling.	Done
07.09.2.3.3	Mark	Include Scott Huling on all Site 27 email transmittals,	Done
07.09.2.4.1	Charles	Get feedback from Geosyntech regarding the Treatability Study at the northern plume area. **Ongoing – spoke with Mike Singletary – not much information**	
07.09.2.4.2	Charles	Talk to Dan Wadell regarding the vapor intrusion for Site 45. **Spoke with Mike Singletary – new research data shows vapor intrusion will be a problem at Site 45**	Done
07.09.2.4.3	Mark	Arrange a conference call with Scott Huling regarding the Site 45 Southern Plume ISCO Treatability Study and where to go next.	Done

Action Items Developed June 11, 2009

Item	Responsible	Action Item	Due Date
06.09.1cc	Tetra Tech	Present analyte list and laboratory detection limits to Team members prior to release of draft SAP (Site 3).	OBE
06.09.2cc	Tetra Tech	Look into using the Pro UCL – KM method (default to guidance provided in Chapter 16) instead of ½ the detection limit.	Done

Action Items Developed May 18-20, 2009

Item	Responsible	Action Item	Due Date
05.09.2.2.3	Tim H.	Provide building construction date and solvent type information to Team members. **Ongoing**	
05.09.3.1.4	Mark/Charles	Provide accelerated schedule to Tier II before their October meeting. **Ongoing**	Oct 1 2009
05.09.3.4	Sarah	Report back to Team about status of adding MRP sites to the FFA. **Ongoing – Steve Beverly needs to look into a couple of issues. Should be a go.**	By next meeting

Action Items Developed March 2009

Item	Responsible	Action Item	Due Date
03.09.1.1.2	Mark	Will provide information confirming that LNAPL at Site 27 is not a listed waste to Team members.	Done
03.09.1.3.1	Charles	Send alternatives (realistic schedule) to Tier II for their consideration regarding the Site 3 FY09 ROD timeline. **Ongoing – Cannot make FY09 timeline for Site 3 ROD**	

03.09.2.2.2	Mark	Propose sediment PALs for at Parris Island for the UFP SAP.	Done
03.09.2.2.3	Mark	Review the background data set for Site 3 and propose if it is appropriate for use at the UXO sites (for sediment and soils).	Done
03.09.2.2.6	Mark	Update UFP SAP with the verbal comments noted carrying the concepts throughout the document to the remaining, similar worksheets.	Done
03.09.3.2	Mark	Mark to send Kelly Tetra Tech's completed well list for Parris Island. **Ongoing**	By 05-19-2009

Action Items Developed October 2008

Item	Responsible	Action Item	Due Date
11.08.1.1.2	Mark	Revise April 2008 meeting minutes for approval by the Team. Team members please resend any comments to Mark.	Done
11.08.1.1.5	Mark	Send Kelly the list of missing sites for the Base Sites map. **Done.** Mark to contact Joe Hamilton to get information on missing sites.	Done
11.08.1.4	Meredith / Charles	Look into the WWTP demolition and SWMU 42 to see if regulatory oversight and/or closure are needed. The WWTP will need to be addressed under both RCRA and NPDES.	Done
11.08.2.2.4	Tim	Develop a list of OWS for the state. **Not submitted.**	By 09-18-09
11.08.2.3.2	Mark	Arrange a conference call with Team members after the development of the UFP SAP for Site 14.	OBE

Previous Action Items

Item	Responsible	Action Item	Due Date
0605-013	Mark	Provide RTC for SCHDEC remaining SI/CS comments. **Ongoing** – need to include most recent data and submit report. Will be in final document.	**Ongoing**
A0801-03	Heber	Provide an engineering analysis to support demolition materials disposal (temp lodging 200). **Ongoing**	By 03-01-2009

Consensus Item: The Team reached consensus to approve the July 2009 minutes, however EPA stated the revised draft final minutes had not been received, therefore approval of the minutes were contingent upon EPA's and DHEC's redline changes being incorporated.

Modifications were made to the agenda to ensure that Day 2 ends at 12:00 p.m.

SCDHEC responded regarding the WWTP (SWMU 40). The WWTP will need to be addressed under both RCRA and NPDES.

Action Item: Charles to check if the WWTP (SWMU 40) needs to be included in DSMOA.

1.2 Training

Pat provided training on Roles and Responsibilities. The training consisted of providing Team members with a copy of the draft Roles and Responsibilities. Team members further discussed the Roles and Responsibilities making modifications.

Consensus Item: The Team reached consensus to accept the Roles and Responsibilities as modified at the meeting.

Action Item: Stacey to give the Pat the Roles and Responsibilities for the Tier II Link.

1.3 Site 27 Path Forward

Ultimate goal – ROD and remedy in place.

Short-term goal – How best to do CERCLA and remedial activities to make Depot construction activities as easy as possible.

Navy – EE/CA better supports the Depot. Reasoning: Contamination in the vault is an operational hindrance, LNAPL pumping, and cost categories where want to show monies going to cleanup (not all to study).

Regulatory path to follow – EE/CA versus RI/FS process versus addressing both data needs (EE/CA and RI/FS) in one mobilization.

USEPA and DHEC cannot support an RI with data gaps. DHEC – Keep in mind that DNAPL removal may be necessary.

Consensus Item: The Team reached consensus that completing the RI, following it with an EE/CA, and revising the RI is not an option for Site 27.

Funds for construction at Site 27 will expire September 2012. Construction needs to be started by March 2011.

The team discussed a variety of potential alternative approaches that went something like this:

Alternative 1 – At the next mobilization, address RI data gaps, gather data to support EE/CA and removal action, complete the EE/CA and removal action, use data and post-removal data to complete an RI.

Alternative 2 – Go straight to either EE/CA or RI with no additional data collection. USEPA and DHEC cannot support this alternative.

The goal of the removal action is to clear the site for the construction. If a dig and haul is not needed, an option could be to have the footprint of the building serve as an LUC (cover). Another suggestion was depending on what is found, incorporate remedial action in conjunction with construction; however, the Navy does not want the Motor T contractor to have to deal with contaminants. The Navy wants to have the surface soil in the footprint of the proposed construction sampled.

The Navy, USEPA, and Depot agreed that an EE/CA is needed. An EE/CA would prepare the site for the Motor T construction, reduce the source for overall cleanup of the site, and assess the risk to groundwater.

Alternative 3 – EE/CA based on current data, objective to evaluate risks to construction worker and to evaluate need for non-time-critical removal action (Action Memo for that). RAC does removal action, which completes the delineation. From that data, the RAC produces a work plan, and performs the removal. Perform a post-removal investigation with an RI-style UFP SAP. Alternative 3 is contingent upon the RAC being able to delineate with a UFP SAP.

Action Item: Mark to arrange a conference call with Charles, Peggy, and Mike Singletary to discuss if the RAC contractor can perform work at Site 27 without a UFP SAP.

The Scope of Work for the RAC includes writing the EE/CA and Action Memo.

Alternative 4 – Have RAC delineate to clear building site, EE/CA, and confirmatory sampling. Second mobilization for vault and LNAPL (addressed during RI/FS process).

Consensus Item: The Team reached consensus that the proposed path forward for Site 27 (if it can be done without a UFP SAP) is for the RAC to delineate to clear the construction site; prepare an EE/CA, Action Memo, Removal Action Work Plan, and perform a removal action if necessary; and collect post-removal confirmation sampling. After the constructions site area is cleared (inside purple line box), complete a UFP SAP for the remainder of the LNAPL delineation as well as the RI data gaps, field mobilization to implement the UFP SAP, and use data to complete the RI and develop an FS. If a UFP SAP has to be completed in the first step prior to delineation of the construction site area, prepare a UFP SAP for that effort.

Action Item: Tim to ensure the RAC will not disturb the area east of the fence line (proposed parking lot/vault area) during construction activities at Site 27 and confirm this is acceptable to Public Works.

Data Gaps for Motor T Construction
What is the risk to construction workers from exposure to soil (and product, if present) in the Motor T project area?
What is the risk to industrial workers that may occupy the building?
Area not to be disturbed is to the east of the purple line (site boundary box on Figure 6-2 of the CSM).
Is there principal threat source material of concern that needs to be removed?

Motor T Area Analyte List – VOCs (risk driver), SVOCs, pesticides (risk driver), TAL metals, PCBs.
PAHs?

Action Item: Greg to have a map made of Site 27 to include SVOCs, VOCs, and pesticide detections.

Consensus Item: The Team reached consensus to perform data gap sampling at the Motor T Area (Site 27 – inside purple box) while Tetra Tech evaluates current background data options and attempts to construct a background set from existing Parris Island data. If adequate Parris Island data are not available, then consider a local (Beaufort) background data set. Evaluation will be conducted by the Team to determine the applicability and comparability of the background data set. If PAHs are a risk driver and an existing background data set is not applicable or comparable, a site-specific PAH background data set will need to be collected.

Action Item: Greg to evaluate background data options for Site 27 (soil and sediment).

Can previously collected data (1995, 2002, 2007, and 2008) be used in conjunction with new data for the risk assessment? Per DHEC, it is not reasonable to use 1995 data for current exposure scenarios. 2007 and 2008 data is acceptable.

Consensus Item: The Team reached consensus that 2007 and 2008 data can be used in the risk assessment for the Motor T Area (Site 27).

Action Item: Greg to review NCP for definition of principal threat waste and applicability to 270,000 ppm DDT.

Still to be done
1) Does a UFP SAP need to be completed? If yes, then RAC start writing UFP SAP. If no, then RAC to write the work plan.

2) Answer the following questions:
If principal threat waste is present, then …
If risk to construction workers is unacceptable, then …
If risk to industrial workers is unacceptable, then ...

1.4 SMP / Schedule

Document Schedule/Agenda

Site 3, Draft UFP SAP – The draft SAP has been submitted and is in Team review. Site 3 needs to be put on an accelerated schedule to meet the D2 Tech Memo deadline of 12/20/2009. It is the Navy's understand that EPA will not accept another extension letter at this time. EPA would like to see an accelerated schedule that goes through the ROD. Having a concurrent review (Navy chemist and Team reviewing at the same time) would help accelerate the schedule. Significant changes to the document would send it back to the Navy chemist for additional review. However, with all the Team input already given on the DQOs, there should not be any significant changes. The mercury uptake model needs to be incorporated into the risk assessment. The fish tissue data will be used for risk communication for human health. The outcome of the risk assessment will be presented in the draft Tech Memo. The field event, lab results, risk assessment, and Tech Memo all need to be done by December 20. The Navy feels the December 20 deadline can be met.

Team members reviewed a proposed accelerated schedule for Site 3 and brainstormed ideas on how to accelerate the schedule further.

Lines 4, 5, 6 and 7, 8, 9 – concurrent. **Doable**
Lines 9 and 14 – Mobilize a couple of days after seeing comments if it doesn't affect catching fish. **Doable**
Line 10 – Add 2 days for red line review. **Doable**
Lines 10 and 11 – combine and have 1 day Team meeting to review and revise. **Doable; however, the team meeting will require everyone to be present, so we cannot realistically pick 1 date and go for it. Need to pick a range of dates (possibly 1 week time frame).**
Line 14 – Accelerate permit application based on draft UFP SAP. **Doable**
Line 17 – Finalize rest of Tech Memo up through fish tissue estimates starting now.

ID	Task Name	Duration	Start	Finish	New Duration	New Start	New Finish	Resource
0	Prepare Tech Memo up through fish tissue estimates					started	10/2/09	Tt
1	Draft UFP SAP	10 days	8/14/09	8/23/09	--	--	--	Tt
2	Internal reviews	14 days	8/24/09	9/6/09	--	--	--	Tt
3	Revise UFP SAP	5 days	9/7/09	9/11/09	--	--	--	Tt
4	UFP SAP to Navy Chemist	1 day	9/12/09	9/12/09		9/17/09	9/17/09	
5	Navy Chemist review	14 days	9/13/09	9/26/09		9/18/09	10/1/09	Navy
6	Revise UFP SAP (2)	7 days	9/27/09	10/3/09		10/1/09	10/6/09	Tt
7	D1 UFP SAP to Team	1 day	10/4/09	10/4/09		9/17/09	9/17/09	
8	Team review UFP SAP	15 days	10/5/09	10/19/09		9/18/09	10/2/09	Team
9	Response to comments/redline prep/field mob prep	6 days	10/20/09	10/25/09	5 days	10/3/09	10/7/09	Tt
10	Redline review				2 days	10/8/09	10/9/09	Team
11	Resolve RTC / Revise UFP SAP (3)	5 days	10/26/09	10/30/09	1 day	10/13/09	10/13/09	Team
12	D2 UFP SAP to Team	1 day	11/5/09	11/5/09		10/14/09	10/14/09	
13	Approve UFP SAP	5 days	11/6/09	11/10/09		10/15/09	10/19/09	Team
14	Field mobilization	10 days	11/11/09	11/20/09		10/13/09	10/22/09	Tt
15	Laboratory analysis	10 days	11/21/09	11/30/09	15 days	10/23/09	11/06/09	Tt
16	Data validation	5 days	12/1/09	12/5/09		11/07/09	11/11/09	Tt
17	Prepare D2 Tech Memo	14 days	12/6/09	12/19/09		11/12/09	11/25/09	Tt
18	D2 Tech Memo to Team	1 day	12/20/09	12/20/09		11/30/09	11/30/09	

PI Team meeting Nov 17-18

DHEC stated that if one agency misses their deadline the whole schedule is no longer applicable. Since this schedule is very tight and we had a few extra weeks to meet the 12/20/09 D2 Tech Memo date, DHEC suggested adding in buffer days into this schedule. At that time it was stated that we would return

to the schedule the following day of the meeting. When DHEC questioned discussing the schedule the next day, it was said that the schedule was adequate and was not discussed further.

EPA agrees with DHEC regarding the suggestion for this period to be longer as in a range for scheduling this (Line 11). However, EPA believes this was agreed to as a team, but is not sure how to reflect a scheduling range of 5 days for a 1 day duration meeting. Regardless, those involved need to make sure this happens within 5 days of when it was scheduled.

Site 5, RI Work Plan UFP SAP – The draft RI Work Plan is in Navy review. The contaminated fill material is now part of the site. After the cover letter is received from the Navy, the UFP SAP will be sent out for Team review.
Site 14, Draft UFP/SAP – Waiting for Team concurrence on path forward.

Site 27, Data Gap Sample Collection – Pre-draft UFP SAP for the RI to be completed by Tetra Tech. Will break out schedule to reflect break out of agreed upon proposed path forward. Data collection will occur prior to the EE/CA.

Site 45, GSI Pilot Testing – Data has been received, and the results of the testing are being interpreted. Subslab soil gas will probably drive the remedy.

Action Item: Mark to send GSI pilot testing data (Site 45) to Team members. DHEC and EPA need hard copy with Navy cover letter.

Site 45, Treatability Study – No reports from pilot tests have been received.

Action Item: Charles to check with Mike Singletary regarding the GeoSyntech pilot study report (Site 45).

Action Item: Lila to check to see if Site 45 pilot study report was received at EPA.

Site 53, SI – The path forward for Site 53 needs to be determined by Team members. An SI could be completed with current data, but would suggest an RI. Funding for the SI expires in 10 months.

MRP, UFP SAP – The D1 SAP has been sent to the Team for review.

5 Year Review – D1 has a date of 3/20/2010 and the D2 has a date of 6/20/2010.

Action Item: Charles to get a Scope of Work to Tetra Tech for the 5 Year Review.

1.5 Tier II Update

Stacey provided the Tier II update. Tier II would like to see a revised schedule for Site 3 by their next meeting. The next Tier II meeting is October 6-7, 2009. Tier II is glad to see the Team is working on their roles and responsibilities. The Team needs to continue to check for consensus often. DHEC involvement on Team may be increasing due to additional technical support. Funding estimates would increase due to additional DHEC involvement. Buy in to the SAP processing will be discussed at the next Tier II meeting.

DAY 2

2.1 Site 14

Priscilla Wendt, DNR, and Tom Dillon, NOAA, joined the meeting via conference call. Team members discussed what media to sample at Site 14 – sediment, stormwater, or both. Priscilla suggested sampling at the first flush, and Tom suggested sampling at low tide if tidally influenced. The Navy stated that the first flush would be for an ongoing release, not for a historic site and that are trying to determine if results of release impacted sediments since impacts to the environment would be through the sediment.

Fiddler crabs can burrow as deep as 3 feet. Sediment sampling range could be 0 to 3 feet. The drainage basin can be defined; however, sediments are not easily defined. EPA suggested using process knowledge to narrow the investigation. The RFA states the concern is with sediment in the outfall.

Stormwater hits can be traced back to a source while sediment probably cannot. Stormwater monitoring is not covered under the Depot's permit. Again, DHEC suggested taking 1 sample from every outfall to use as anthropogenic background.

Priscilla suggested comparing the 3 groups of stormwater outfalls based on what kind of area they are draining (process related, anthropogenic, background). For the SI, Tetra Tech will sample at the end of the pipe. DHEC stated to be careful with the definition of "process area." Per the Depot, oil water separators are tied to the sanitary system.

A UFP SAP is being developed for Site 14. A proposed list of the sampling and the process for determining where to sample will be developed. 100% of the process areas will be sampled. About 10 samples will be taken from the anthropogenic and background areas. Influence categories include rain event with no water except for during the rain event, tidally influenced, ongoing drip, buried and inaccessible, and groundwater/surface water. While in the field, it will be determined if the area is depositional or scoured.

Consensus Item: The Team reached consensus to have 100% of the process areas sampled and at least 10 (exact number to be determined at a later date) technically defensible samples from the anthropogenic (impervious and non-impervious) areas at Site 14.

Peggy asked the question, "If contamination is found and the source cannot be located, what action will be taken?" to get a feel for what the options are. More samples would need to be taken and further investigation would be needed.

2.2 Site 45

GSI pilot testing vapor intrusion data has been received, and the results of the testing are being interpreted. Subslab soil gas data will probably drive the remedy. The proposed path forward for Site 45 includes concluding the RI Addendum using the subslab data (provided it justifies taking an action) and developing an FS. Following the RI Addendum, the FS will need to consider active vapor intrusion remediation, not just beneficial affects of groundwater remediation.

Consensus Item: The Team reached consensus that the path forward for Site 45 includes concluding the RI Addendum using the GSI subslab data (provided it supports the need for taking an action) and indoor air data and developing an FS. Following the RI Addendum, the FS will need to consider active vapor intrusion remediation, not just beneficial affects of groundwater remediation.

2.3 Meeting Review and Closeout

Next Meeting

The next meeting is scheduled for November 17-18, 2009, at MCRD Parris Island, SC beginning at 8:30 a.m. on the 17th and concluding at 1:00 p.m. on the 18th. Annie Gerry will be the Team Leader, and Tim Harrington will be the Time Keeper.

Agenda Items

Check In/Agenda/Action Items	Leader/All	30 min
Training	Pat	60 min
Site 3 (#1 priority)	Mark	30 min
Status update – get to ROD		
Site 5	Mark	30 min
Update		
Site 14	Mark/Peggy	60 min
DQOs (worksheets 10 & 11), site breakout		
Site 27	Mark/Peggy	60 min
UFP SAP? RAC contractor at meeting?		
SMP, Schedule Review	Charles/Mark	60 min
MRP (high priority)	Mark	30 min
Status update		
5 Year Review (schedule)	Charles/Mark	15 min
Issues identified in last review, what actions have been taken since		
Tier II Update	Tier II Link	30 min
Exit Strategy – need to make one	Team	60 min
Use SMP for sites in FFA and Exit Strategy for other sites		
TRC Meeting	TRC/Tim	60 min
Meeting Closeout	All	60 min
Last minute topics and parking lot items	All	? min

Tentative Meeting Dates/Proposed Location

February 2-3, 2010	DHEC, Columbia, SC
April 13-14, 2010	MCRD Parris Island, TRC Meeting
June 8-9, 2010	DHEC, Columbia, SC
September 14-15, 2010	MCRD Parris Island, TRC Meeting
November 16-17, 2010	DHEC, Columbia, SC

Action Item, Consensus Item, and Parking Lot Review

Action items, consensus items, and parking lot items were reviewed and are provided on the following pages.

Plus/Delta

+	Δ
Identified areas where data gaps need to be filled	Need more resolution on items outside room (UFP SAP)
Tier II presence	Some issues have been spinning (Susan's comment was that DHEC is frustrated by having to bring several of the same issues to the table over and over causing them to have to be revisited in meetings, teleconference calls, and memos over the years. The Team has only recently agreed on several of these issues, but only when they were brought back to the table by an Agency other than DHEC.)
DHEC guests present	Didn't listen to timekeeper
Better meeting in getting out of sites	Round and round discussions (go off on tangents)
Having a scribe	Can improve efficiency
Finally get progress (Priscilla's and Tom's help)	Working late on Day 1
More consensus items	Allow ancillary issues to derail Team
Civil meeting with progress made	ALL individual team members need to take responsibility for the productivity of the Team
Productive meeting	Need training on how to test for consensus
Active facilitation	Test for consensus when running over on time allotted
Good discussions	Talking over quieter Team members
Agree on core issues	Listening to State when comments made
Agreed path forward on sites	Multiple conversations at the same time
Lack of parking lot items	
Having Susan at the table	
Annie as timekeeper	
Reasonable and manageable paths forward and consensus items	
Site 27 discussion	
Good participation	
Testing for consensus	
Accommodating schedules	
Tim taking a more active role in the meeting	

Facilitator Feedback

The facilitator had the Team rate how they felt they did at this meeting on a scale from 1 to 10. The ratings ranged from 5 to 8, with an average of 5 to 6. Improvement is definitely being seen with the Team by the facilitator and Team members.

Action Items
MCRD Parris Island Partnering Meeting
September 15-16, 2009

Action Items Developed September 15-16, 2009

Item	Responsible	Action Item	Due Date
09.09.1.1	Charles	Check if the WWTP (SWMU 40) needs to be included in DSMOA.	09/18/09
09.09.1.2	Stacey	Give the Pat the Roles and Responsibilities for the Tier II Link.	09/25/09
09.09.1.3.1	Mark	Arrange a conference call with Charles, Peggy, Tim, and Mike Singletary to discuss if the RAC contractor can perform work at Site 27 without a UFP SAP.	09/18/09, 9:00 a.m.
09.09.1.3.2	Tim	Ensure MILCON will not disturb the area east of the fence line (proposed parking lot/vault area) during construction activities at Site 27 and confirm this is acceptable to Public Works.	10/15/09
09.09.1.3.3	Greg	Have a map made of Site 27 to include SVOCs, VOCs, and pesticide exceedances – one for soil and one for groundwater.	10/2/09
09.09.1.3.4	Greg	Evaluate background data options for Site 27.	10/9/09
09.09.1.3.5	Greg	Review NCP for definition of principal threat waste and applicability to 270,000 ppm DDT.	10/9/09
09.09.1.4.1	Mark/Charles	Send GSI pilot testing data (Site 45) to Team members. DHEC and EPA need hard copy with Navy cover letter.	9/28/09
09.09.1.4.2	Charles	Check with Mike Singletary regarding the GeoSyntech pilot study report (Site 45).	09/18/09 cc
09.09.1.4.3	Lila	Check to see if Site 45 pilot study report was received at EPA.	09/22/09
09.09.1.4.4	Charles	Get a Scope of Work to Tetra Tech for the 5 Year Review.	10/1/09
09.09.2.3.1	Mark	Provide Tier II (Stacey) with a copy of the accelerated schedule for Site 3.	10/5/09
09.09.2.3.2	Meredith	Provide Team members with an example of an Exit Strategy and Site Status	Before next meeting
09.09.2.3.3	Mark	Bring an example Exit Strategy to next meeting	Next meeting

Action Items Developed September 1, 2009

Item	Responsible	Action Item	Due Date
09.09.cc1	Tetra Tech, the Navy, and the Depot	Work together to set timelines for Site 27 for an EE/CA scenario and an RI scenario and bring to the September 2009 meeting. **Agenda Item**	Sep 15, 2009

Action Items Developed July 14-15, 2009

Item	Responsible	Action Item	Due Date
07.09.1.2	Team	Team members to provide Pat with roles/responsibilities of agencies during Team meetings.	Done
07.09.1.4.1	Lila	Check with Gina to see what was done in the past at Camp Lejeune regarding outfall sampling.	Done
07.09.1.4.2	Meredith	Check with other project managers as how to be consistent with what was done at other facilities regarding outfall sampling.	Done

07.09.2.2.1	Charles	Forward the letter from the LNAPL contractor for Site 27 to Team members.	Done
07.09.2.2.2	Team	Review and comment on the Site 27 CSM as soon as feasibly possible.	Done
07.09.2.2.3	Mark	Arrange a conference call with the Team after receiving CSM comments and before the September meeting to review CSM comments and the DQOs for Site 27. The agenda for the September meeting will also be discussed.	Done
07.09.2.2.4	Lila	Resend comments on path forward for Site 27 to Mark.	Done
07.09.2.2.4	Mark	Prepare a revised path forward for Site 27 addressing EPA's comments.	Done
07.09.2.2.5	Mark	Arrange a conference call between the Navy, Tetra Tech, and the LNAPL contractor on Tuesday, July 21.	Done
07.09.2.3.1	Annie	Check if monitoring well requests need to be submitted on government letterhead or not. They need to be submitted to Richard Haynes.	Done
07.09.2.3.2	Mark	Send a hard copy of the Site 27 CSM to Scott Huling.	Done
07.09.2.3.3	Mark	Include Scott Huling on all Site 27 email transmittals,	Done
07.09.2.4.1	Charles	Get feedback from Geosyntech regarding the Treatability Study at the northern plume area. **Ongoing – spoke with Mike Singletary – not much information**	
07.09.2.4.2	Charles	Talk to Dan Wadell regarding the vapor intrusion for Site 45. **Spoke with Mike Singletary – new research data shows vapor intrusion will be a problem at Site 45**	Done
07.09.2.4.3	Mark	Arrange a conference call with Scott Huling regarding the Site 45 Southern Plume ISCO Treatability Study and where to go next.	Done

Action Items Developed June 11, 2009

Item	Responsible	Action Item	Due Date
06.09.1cc	Tetra Tech	Present analyte list and laboratory detection limits to Team members prior to release of draft SAP (Site 3).	OBE
06.09.2cc	Tetra Tech	Look into using the Pro UCL – KM method (default to guidance provided in Chapter 16) instead of ½ the detection limit.	Done

Action Items Developed May 18-20, 2009

Item	Responsible	Action Item	Due Date
05.09.2.2.3	Tim H.	Provide building construction date and solvent type information to Team members. **Ongoing**	
05.09.3.1.4	Mark/Charles	Provide accelerated schedule to Tier II before their October meeting. **Ongoing**	Oct 1 2009
05.09.3.4	Sarah	Report back to Team about status of adding MRP sites to the FFA. **Ongoing – Steve Beverly needs to look into a couple of issues. Should be a go.**	By next meeting

Action Items Developed March 2009

Item	Responsible	Action Item	Due Date
03.09.1.1.2	Mark	Will provide information confirming that LNAPL at Site 27 is not a listed waste to Team members.	Done
03.09.1.3.1	Charles	Send alternatives (realistic schedule) to Tier II for their consideration regarding the Site 3 FY09 ROD timeline. **Ongoing – Cannot make FY09 timeline for Site 3 ROD**	
03.09.2.2.2	Mark	Propose sediment PALs for at Parris Island for the UFP SAP.	Done
03.09.2.2.3	Mark	Review the background data set for Site 3 and propose if it is appropriate for use at the UXO sites (for sediment and soils).	Done
03.09.2.2.6	Mark	Update UFP SAP with the verbal comments noted carrying the concepts throughout the document to the remaining, similar worksheets.	Done
03.09.3.2	Mark	Mark to send Kelly Tetra Tech's completed well list for Parris Island. **Ongoing**	By 05-19-2009

Action Items Developed October 2008

Item	Responsible	Action Item	Due Date
11.08.1.1.2	Mark	Revise April 2008 meeting minutes for approval by the Team. Team members please resend any comments to Mark.	Done
11.08.1.1.5	Mark	Send Kelly the list of missing sites for the Base Sites map. **Done.** Mark to contact Joe Hamilton to get information on missing sites.	Done
11.08.1.4	Meredith / Charles	Look into the WWTP demolition and SWMU 42 to see if regulatory oversight and/or closure are needed. The WWTP will need to be addressed under both RCRA and NPDES.	Done
11.08.2.2.4	Tim	Develop a list of OWS for the state. **Not submitted.**	By 09-18-09
11.08.2.3.2	Mark	Arrange a conference call with Team members after the development of the UFP SAP for Site 14.	OBE

Previous Action Items

Item	Responsible	Action Item	Due Date
0605-013	Mark	Provide RTC for SCHDEC remaining SI/CS comments. **Ongoing** – need to include most recent data and submit report. Will be in final document.	**Ongoing**
A0801-03	Heber	Provide an engineering analysis to support demolition materials disposal (temp lodging 200). **Ongoing**	By 03-01-2009

Consensus Items
MCRD Parris Island Partnering Meeting
September 15-16, 2009

The Team reached consensus to approve the July 2009 minutes.

The Team reached consensus to accept the Roles and Responsibilities as modified at the meeting.

The Team reached consensus that completing the RI, following it with an EE/CA, and revising the RI is not an option for Site 27.

The Team reached consensus that the proposed path forward for Site 27 (if it can be done without a UFP SAP) is for the RAC to delineate to clear the construction site, prepare EE/CA, removal action if necessary, and post-removal confirmation sampling. Complete RI UFP SAP, field mobilization to address data gaps, and RI/FS. If a UFP SAP has to be completed prior to delineation, prepare a UFP SAP for the footprint of the building.

The Team reached consensus to perform data gap sampling at the Motor T Area (Site 27) while Tetra Tech evaluates current background data options and attempts to construct a background set from existing Parris Island data. If adequate Parris Island data are not available, then consider a local (MCAS Beaufort) background data set. Evaluation will be conducted by the Team to determine the applicability and comparability of the background data set. If PAHs are a risk driver and an existing background data set is not applicable or comparable, a site-specific PAH background data set will need to be collected.

The Team reached consensus that 2007 and 2008 data can be used in the risk assessment for the Motor T Area (Site 27). All historical data can be used for delineation purposes.

The Team reached consensus to have 100% of the process areas sampled and at least 10 (exact number to be determined at a later date) technically defensible samples from the anthropogenic (impervious and non-impervious) areas at Site 14.

The Team reached consensus that the path forward for Site 45 includes concluding the RI Addendum using the GSI subslab data (provided it supports the need for vapor intrusion remedy evaluation) and indoor air data and developing an FS. Following the RI Addendum, the FS will need to consider active vapor intrusion remediation, not just beneficial affects of groundwater remediation.

Parking Lot Items
MCRD Parris Island Partnering Meeting
September 15-16, 2009

<u>Parking Lot Items from September 2009</u>

Path forward for Site 27 Motor T Area

Draft

Roles & Responsibilities of the Depot

1. Timely document review and issue resolution.
2. Manage community relations (e.g., consult with American Indian tribes as required, work with Base community).
3. Ensure remedial actions are implemented and ensure site "close-outs".
4. Ensure compliance with regulatory requirements.
5. Provide input to development and maintenance of decision documents.
6. Identify probable land uses and provide oversight and coordination of base mission and projects.
7. Provide input to development and maintenance of SMP.
8. Support IDW management.
9. Protect natural and cultural resources.
10. Bring Parris Island and Tenant Commanding General's concerns to the team and vice versa.
11. Distribute the administrative record to the Public.

Roles & Responsibilities of Navy Contractors

1. Support Navy within constraints of previously agreed scope and budget, and/or as allowed by contract.
2. Timely document preparation or revision.
3. Timely issue resolution.
4. Use 'risk' to drive decisions and develop strategies.
5. Look for 'closure' opportunities-avoid 'research' projects.
6. Ensure compliance with regulatory requirements.
7. Provide technical support to meet team goals.
8. Advise team of ways to do work cheaper/better/faster.
9. Advise team: of schedule slippage with recommendation(s) to get back on target, or adjust the baseline, as to changed conditions, and when assigned tasks will not meet team goals.
10. Focus work to support decision making.
11. Be responsive.
12. Keep activity informed of conditions that affect the activity.
13. Keep team members informed of status of field work.
14. Maximize use of all existing data and information.
15. Be knowledgeable of the latest techniques, but avoid temptation for 'overkill' or frivolous applications.
16. Assist in planning and execution of program.
17. Be knowledgeable of regulations and guidance.
18. Cooperate with regulator(s) oversight during field work.
19. Fully coordinate field work with activity prior to entering facility.
20. Advise team of economic and technical impact of their recommendations.
21. Create and distribute the administrative record in response to Navy request.

Roles & Responsibilities of Navy RPM

1. Timely document preparation or review and issue resolution.
2. Support community relations.
3. Ensure remedial actions are implemented and ensure site "close-outs".
4. Ensure compliance with regulatory requirements.
5. Provide input to development and maintenance of decision documents.
6. Provide input to development and maintenance of SMP.
7. Support team involvement.
8. Create and distribute the administrative record.

9. Provide contract administration.
10. Support ERN program/NAVFAC budget process.
11. Provide support for regulatory agreements.
12. Provide technical support to team.
13. Bring NAVFAC concerns to the team and vice versa.
14. Coordinate with non-ERN Project Manager(s).
15. Provide resources through DSMOA to compensate for State involvement.
16. Assure resources are available to perform work.

Roles & Responsibilities of SCDHEC

1. Review and comment on documents in the allotted time frames.
2. Advise team members of upcoming regulatory changes and developments, and the actual or potential affects with respect to the PI Partnering Team.
3. Be knowledgeable about all sites at MCRD PI.
4. Provide technical oversight and support.
5. Determine the applicability of the state hazardous waste regulations.
6. Resolve issues or concerns within the Department.
7. Meet DSMOA commitments.
8. Input information in the RCRIS database.
9. Encourage, promote, and participate in community relations activities, including attendance at TRCs and public meetings.
10. Maintain a complete and accurate record of documentation to ensure public access to information.
11. Document actions thoroughly to ensure smooth transition in case of personnel changes.
12. Ensure that investigation and remediation of sites is carried out in a manner which best represents the interests of the citizens of South Carolina.
13. Provide input at the scoping stage to increase efficiency and reduce the need to correct previous work.
14. Be responsive to requests for information.
15. Respond to concerns of the public.
16. Conduct frequent facility visits to monitor progress of remedial efforts and site status.
17. Track facility compliance with schedules established by the South Carolina Hazardous Waste Management Regulations.
18. Ensure remedial actions are implemented and ensure site "close-outs".
19. Identify and ensure compliance with regulatory requirements.
20. Review and advise regulatory compliance status.
21. Ensure regulatory interpretation is consistent within state programs.
22. Provide criteria for clean-up.
23. Provide program and technical training.
24. Provide support on policy issue resolution.
25. Assist in resolution of regulatory concerns and issues.

Roles & Responsibilities of USEPA

1. Ensure that environmental impacts associated with past and present activities at Parris Island are thoroughly investigated and appropriate remedial action taken as necessary to protect the public health, welfare, and the environment.

2. Work within the FFA established procedural framework and schedule for developing, implementing and monitoring appropriate response actions (ARARs) at the site in accordance with CERCLA, the NCP, and various applicable or relevant and appropriate regulations, guidance, and/or policy.

3. Facilitate cooperation, exchange of information and participation of the FFA parties while meeting the first two responsibilities listed above.

4. Advocate the "Team's position" to EPA management and the Agency while meeting the first two responsibilities listed above.

Roles & Responsibilities of Team Facilitator

1. Coordinate with RPM, Team Leader, and Tier II link two weeks prior to meeting to determine if anything controversial will be brought up.
2. Collaborate with the team leader during the meeting to accomplish the agenda.
3. Post agenda, maintain parking lot, maintain action items, and capture thoughts, ideas, and positions on flip charts in coordination with team scribe.
4. Intervene when ground rules are not being enforced.
5. Intervene if the timekeeper does not call time on topics.
6. Ensure balanced participation. Help others to communicate.
7. Participate in the incorporation of new team members.
8. Recognize conflict and initiate resolution.
9. Be objective and not take sides. Remain neutral.
10. Help the team clarify its tasks and goals.
11. Keep team focused.
12. Facilitate blocked progress towards goals.
13. Provide process, management/planning, project management and problem-solving training.
14. Help provide positive team atmosphere. Support the Team’s activities.
15. Provide feedback on team function and progress.
16. Provide input on team partnering skill needs.
17. Provide comments on the meeting process.
18. Provide ideas on how the team can keep improving.
19. Provide and apply beneficial experiences from other teams.
20. Assist Team in reaching consensus and documenting decisions.

Roles & Responsibilities of the Tier II Link

1. TBD

MCRD PARRIS ISLAND PARTNERING MEETING
April 27-28, 2010
MCRD Parris Island, SC

Leader: Tim Harrington Time Keeper: Lila Llamas Scribe: Libby Claggett

Core Members Present:	Meredith Amick	SCDHEC
	Charles Cook	NAVFAC SE
	Annie Gerry	SCDHEC
	Tim Harrington	MCRD PI
	Lila Llamas	USEPA
	Mac McRae	TechLaw, Inc.
	Heber Pittman	MCRD PI
	Mark Sladic	Tetra Tech, Pittsburgh
Support Members/Guests Present:	Peggy Churchill	Tetra Tech, Cocoa
	Libby Claggett	Tetra Tech, Jacksonville, Scribe
	Pat Franklin	The Management Edge, Facilitator
	Stacey French	SCDHEC, Tier II
	Kent Krieg	SCDHEC, Risk Assessor
	Sarah Reed	NAVFAC SE, Tier II
	Laurel Rhoten	SCDHEC, Regional Representative
	Preston Smith	Tetra Tech, Pittsburgh, Risk Assessor

Meeting Start Time: 1:00 p.m.

1.1 Check-in, Agenda Modifications/Additions, Ground Rules, Parking Lot Review, Action Item Review

Action Items Developed February 2, 2010

Item	Responsible	Action Item	Due Date
02.10.1.2.3	Mark	Send Meredith 3 copies of the DQOs for the Parade Deck SAP and Fiber Optic Vault Area SAP (with cover letters).	**Done**
02.10.1.3.1	Mark	Send a hard copy of the Site 14 DQOs to Team members (with cover letter).	**Done**
02.10.1.3.2	Mark	Arrange a 23 March conference call with Peggy and Team to discuss the Site 14 DQOs.	**Done**
02.10.1.4	Tim	Send the MEC Report to Team members.	**Done**
02.10.1.5	Tim	Review the Site 1 Long-term Monitoring Plan regarding sediment sampling (what was required and was it done) and provide the information to the Team.	Ongoing 12 Feb 2010
02.10.1.6.1	Mark	Schedule a conference call with Tetra Tech, USEPA, and SCDHEC risk assessors regarding the risk assessment performed at Site 3.	**Done**
02.10.1.6.3	Team	Develop a path forward for the Site 3 ROD.	Ongoing
02.10.1.9.1	Mark/Charles	Develop a Five Year Review schedule.	**Done** – Charles provided the baseline dates.
02.10.1.9.2	Mark	Send a pdf of the updated schedule to Team members.	**Done**
02.10.1.10	Charles	Send updated Exit Strategy to Team members for comment before the next meeting.	**Done**

Action Items Developed September 15-16, 2009

Item	Responsible	Action Item	Due Date
09.09.1.3.4	Mark	Evaluate background data options for Site 27.	**Ongoing** 10/9/09
09.09.1.3.5	Mark	Review NCP for definition of principal threat waste and applicability to 270,000 ppm DDT.	**Done**

Action Items Developed May 18-20, 2009

Item	Responsible	Action Item	Due Date
05.09.2.2.3	Tim H.	Provide building construction date and solvent type information to Team members.	**Done – will be provided at April meeting**

Previous Action Items

Item	Responsible	Action Item	Due Date
A0801-03	Heber	Provide an engineering analysis to support demolition materials disposal (temp lodging 200). Information recently received. Will try to have done by May 2010.	**Ongoing** By 03-01-2009

Consensus Item: The Team reached consensus to approve the February 2010 minutes as final.

Meredith would like to discuss the Sites 40 and 42 Waste Water Treatment Plant and associated piping if time.

1.2 Site 3

Obstacles at Site 3 include staffing changes. Work is continuing through the slowdown of staffing changes. Mark provided figures showing the comparison of the pond and the reference location cancer risks and the comparison of the pond and reference location hazard indices. Using the agreed exposure scenarios, risk from consuming fish from the pond and from General's landing exceeds 10^{-6} for all receptors, and 10^{-4} for the subsistence fisher. For most cases, the risk and HI at Generals Landing is about half as much as Site 3 within the same order of magnitude. A conclusion resulting from an estimated risk less than 10^{-6}, using the inputs agreed upon, will not be able to be made. This likely results in a need for a risk management decision which would include relative exposure to consumption of fish from the Site 3 pond. Tetra Tech will have the risk assessment/tech memo document to the Navy for review by the week of May 10th. Need to be clear of the scenario for unacceptable risk. EPA stated that the USEPA Regional Review Team will have a chance to provide input to the Site 3 risk assessment document.

The cancer risk figure assumes two times the background. Nothing below two times the background was carried forward into the risk assessment.

Action Item: Sarah Reed will get information on an interim replacement for Dave Barclift (for Site 3) to Charles.

A revised Tech Memo, with response to comments, will be developed by Tetra Tech. Lila requested to see the calculations that went into creating the figures. Mark said that EPA had requested the calculations prior to a resubmittal of the Tech Memo, while SCDHEC preferred to have the revised Tech Memo. In order to support internal Navy reviews, Mark said that effectively, a revised Tech Memo is required. As a result, the revised Tech Memo will be resubmitted rather than submitting the data analysis and risk calculations as an additional deliverable ,.

Action Item: The Navy needs to decide if a concurrent review of the Site 3 Risk Assessment is acceptable or not.

PCB congener data will be discussed in the main body of the tech memo as well as within the uncertainties section of the risk assessment document. DHEC stated the data should be an appendix. Charles stated that the Navy prefers to focus on multiple lines of evidence and asked if there were lines of evidence to support the presence of PCB congeners from other sources outside of the Site 3 pond. Mark stated there are lines of evidence for supporting that risk management decision.

1.3 MRP

The field work, analytical, and validation are complete. The laboratory data review has not indicated significant contamination. Geophysics anomalies were found. One of the goals of the SI is anomaly avoidance; therefore, the anomalies will be noted, but no intrusive investigation is conducted during the SI. Therefore, geophysics results, instead of chemical contamination, will drive most of the conclusions of the report. The draft report should be available for Navy review in May 2010. Team members should have the report for review in June 2010. Mark will be providing a presentation to the TRC regarding the MRP sites. The goal is to have the document reviewed, revised, and submitted as final by September 2010.

Geophysics results varied between sites. Geophysics finds at the Parade Deck (UXO 3) and golf course (UXO 7) showed much smaller anomalies compared to results at the two sites most likely impacted (West Main Range – UXO 4, and Shrapnel Range UXO 5 and 6). Write-ups of the effectiveness, and maximum reliable depth, of the geophysics are currently in preparation.

DHEC needs further information to declare that UXO 1 is a non-existent site.

The draft report will be submitted in whole (instead of incrementally) for review. Any agreements made (via phone, letters, meetings, etc.) will be upheld by Tetra Tech. EPA would like to see interim deliverables or summary results prior to reviewing the entire document as much as possible to avoid major comments to the document. Due to the timetable, Tetra Tech suggests submitting the draft document as a whole. Mark added that deliverables submitted to the Parris Island Team will be consistent with other MRP sites in South Carolina.

1.4 Site 27 / Site 55

A release occurred by the fiber optic vault that migrated to the construction area. The release was separated into two sites (point of release or Site 55 and downgradient of the release or Site 27) based on the Team's desire to free up the construction area sooner for construction activities. To support the construction phase, Tetra Tech will evaluate risks to construction workers, industrial workers, and hypothetical future residents. The most recent responses to submittals, Response to Comments, and SAPs for both investigations should be submitted together, and the mobilizations should occur concurrently. Tetra Tech again said that both sites are the result of a single release and it gets difficult to artificially separate them, and again offered to recombine them. EPA deferred. It is hopeful that all removals will be complete before construction begins. Revised drafts of both SAPs are currently being prepared. Temporary wells will be installed at the border of Site 27/55 near the DDT hotspot. The DDT hotspot at SO-28 will be delineated (Site 27). The hot spot is not considered Principal Threat Waste by Tetra Tech. Since the hotspot is on the boundary between Site 27 and Site 55, EPA asked that the delineation not proceed beyond the new temporary well in the Site 55 location at this time if the sampling occurs at risk. Step out samples will be proposed in the SAP for the hot spot within the Site 27 boundary. All groundwater samples will be collected with the Site 27 investigation. The (MILCON) monies for construction expire September 2012, and construction must be complete by that time. A monitoring well request was sent to SCDHEC; however, it was misaddressed and needs to be resubmitted.

Action Item: Mark to ensure the monitoring well request for Site 27 was resubmitted to DHEC.

Based on previous review comments, using the VSP application to justify the sample design was going to be more effort than initially thought. A biased sampling methodology will used instead. The Navy expressed concern about not having a set construction schedule. The Site 27 boundaries were changed due to the size of the footprint of the building and parking lot shown in the recent 100% design.

DHEC suggested the installation of deep temporary wells at Site 27. The NAVFAC SE Tier II representative stated that Site 27 is considered a high priority site (along with Site 3 and the MRP sites).

Discussion ensued regarding the DDT hot spot and if it is considered principal threat waste (PTW) or not. PTW is a designation put on source material. EPA feels the DDT hot spot is PTW, even with no surface soil contamination; Tetra Tech does not. At this time, the DDT is not considered LNAPL.

Action Item: Mark to prepare schedules based on different scenario possibilities at Site 27 and send to Charles.

Construction is scheduled to begin September with award of the contract in July. Based on the obstacles to getting even the WS 10/11/17 package approved, Tetra Tech does not anticipate having the site ready for construction workers by September if we proceed with the normal document submittal/review process. The Navy questioned if the path forward is to proceed at risk or get Team agreement to accelerate the schedule. If a time-critical removal becomes necessary, an action memo would be developed and submitted for Site 27. DHEC does not see any way to proceed other than at risk. The Depot agrees with DHEC. The main uncertainty for proceeding at risk is ensuring there are not any large, unknown areas of contamination. The Depot stated the need to know the MILCON schedule.

<u>Alternatives for Sites 27 and 55</u>

1. Standard Approach – SAPs, sampling (to smear zone) over both sites, revised Risk Assessment (or sampling results report), Action Memo, EE/CA, Removal Action Work Plan, actual removal, Construction Completion Report.

2. Accelerated Sampling – sample to clear building footprint and area between fence and building first (prior to approval of the SAPs), SAPs, sampling results would drive rest of approach.
   a. Proceed with removal to clear the building footprint
   b. Proceed with Standard Approach (#1 above)

Discussion ensued regarding the number of mobilizations and whether to perform limited sampling at Site 27 (building footprint and corridor), sampling all of Site 27, sampling Site 27 and SO 28, and sampling both Sites 27 and 55. DHEC stated if proceeding at risk, both sites should be sampled with one mobilization. EPA does not agree that both sites should be sampled at risk due to questions regarding specifics of sampling methodology at Site 55. Tetra Tech said that without mobilizing both sites at once, contamination will potentially be addressed at Site 27, while an upgradient source (Site 55) continues to release contamination and so is not completely on board with sampling only Site 27 and not including Site 55. Further discussion included the limit on SO 28 step-out sampling and where the boundary to the Site 55 side of SO 28 should be.

Charles said that Navy will need to proceed at risk if the Team can't quickly reach consensus on DQOs and work plans in time for September construction activity. Charles recommitted to Navy doing all it could to help the Team meet the September deadline. Mark and Charles will prepare schedule options to share with Team that identify various path forwards.

Consensus Item: The Team reached consensus to proceed at risk with sampling all of Site 27 to include the installation and sampling of one temporary groundwater monitoring well on each side of "line" (for a total of two temporary monitoring wells) at SO 28 without step outs on the eastern side. If excavation occurs on the western one-half of SO 28 and if the eastern well boring is contaminated, clean fill going into the western one-half of SO 28 must be resampled prior to excavation of the eastern one-half of SO 28.

Action Item: Mark to arrange a conference call with Team members and EPA personnel in Ada, Oklahoma regarding the Site 55 field screening sampling technologies and approach.

1.5 Site 9 / Site 16

Tetra Tech plans to address Sites 9 and 16 separately from Sites 27 and 55. DHEC expressed concern about separating the sites due to the groundwater plume. Mark said that investigation to date indicates that 9/16 groundwater migrates away from Site 27/55, towards the Site 1 marsh. Typically, groundwater at Parris Island flows toward the nearest water source. Per Tetra Tech, the sites do not have to be linked in order to have concurrent mobilizations. Tetra Tech stated the separation was suggested partly due to concern over ultimately having a large LUC boundary. Per DHEC, LUC boundaries do not have to match site boundaries. DHEC would like to see another page in the Site 27/55 SAP to include Sites 9 and 16 and not have multiple SAPs. The 9/16 sampling will be included in the Site 55 SAP.

Consensus Item: The Team reached consensus that Sites 9 and 16 will remain administratively linked to Sites 27 and 55.

1.6 Site 14

Sediment sampling was proposed at Site 14. Tetra Tech said they felt that SCDHEC suggested that stormwater might be more reflective of releases than sediments. This was incorporated into the DQOs for Team review. Comments have been received, and another submittal will be prepared. However, based on review of the comments, Tetra Tech questioned if both sediment results and stormwater results would be necessary, or even useful, for decision making. If both stormwater and sediment sampling results were collected, exceedances of one and not the other would send that particular outfall into a category of needing additional evaluation.

	SED	**SED**
SW	Yes	Yes
SW	No	No

SW + SED = Yes → RI (compare to background)
SW + SED = No → NFA
SW (No) + SED (Yes) → comparison to background (yes → RI – no → NA)
SW (Yes) + SED (No) → need more information → RI (likely)

One concern is how contaminated stormwater could affect uncontaminated sediment and ecological receptors in the future. DHEC has concerns about whether sediments are indicative of a historical release.. Another question arose regarding the application of background data in decision making.

Consensus Item: Team members reached consensus to the approach at Site 14 (table above).

Tetra Tech is in the process of preparing maps depicting what process area outfalls drain to what basin; however, process area outfall is not defined. Need to describe what a process area outfall is and what it is not. Another issue is that Site 5, for example, is an area with crushed/broken pipes and oyster beds and is tidally influenced. Therefore, it is not clear what would be a representative sediment or stormwater sample. Case by case justifications will need to be made at each outfall. Not all outfalls are discharging. For those outfalls not discharging, sediment samples could be taken at the end of the pipe for historical purposes.

The path forward for Site 14 includes a revision of the DQOs and submittal of RTCs and a SAP.

Action Item: Peggy and Mark to contact Kent regarding sampling techniques at Site 14.

1.7 5 Year Review

Team members agreed to move the 5 Year Review discussion to Day 2.

1.8 Technical Review Committee (TRC) Meeting

The TRC meeting began at 5:40 p.m. The following TRC members attended:

Dr. Alan Warren, University South Carolina, Beaufort
Reed Armstrong, Coastal Conservation League
Dennis Forsythe, Retired Professor, Citadel

Mark provided a Power Point presentation on the Munitions Response Program to the TRC. The final SI Reports are due by September 30, 2010. Per Dr. Warren, based on his own research, no fate and transport evidence of contamination migration was found at MRP sites at other bases (e.g., Camp Lejuene, Cherry Point).

Dr. Warren was requested to give his insight on PCBs and WHO congeners as related to fish tissue. There were sites in the Brunswick, Georgia area that involved both mercury and PCBs. From the standpoint of practical application, the PCB values were overly conservative; thus, the cancer slope factor that was used to determine human health risk bore no semblance to reality. Aroclors 1254 and 1260 are very different from other Aroclors, yet are assessed together. Risks should be based on specific congener content instead of overall PCBs. Risk assessors should be aware that data on specific congeners exist. The risk assessment for PCBs is headed in the direction of congener-based instead of Aroclor-based. Dioxin-like congeners investigated in the Brunswick area were considered more of an ecological issue rather than a human health issue. The risk assessment needs to be made more realistic and reflective of the data. Non-cancer toxicities need to be reviewed as well. To his knowledge, there are no non-anthropogenic congeners.

The TRC meeting was adjourned at 7:11 p.m.

DAY 2

2.1 Agenda Modifications/Additions

Team members reviewed the remaining agenda items.

2.2 Training

Pat continued training on “Guidelines for Reaching Consensus”. The training consisted of reviewing the guidelines for reaching consensus (previous presentation), a team exercise, and group discussion.

Distribution Lists

In the past, only those involved on a conference call were sent any files used during the call. The question arose if everyone on the Team should be receiving all emails, files, etc. or just those involved in the particular activity. Team members provided a list of which people are to be included on which distribution list to the facilitator. It was requested that names on distribution lists be left out of the minutes. It was suggested to use www.doodle.com to schedule conference call/meeting times instead of replying to all regarding conference call/meeting times on emails.

2.3 Site 45

The RI Addendum was submitted noting that vapor intrusion would need to be considered. Comments to the RI Addendum have been received. EPA feels the vapor intrusion data available supports a need for a remedy. Tetra Tech asked if the VI data instead actually suggests that there are some concerns about VI, that MCRD might want to address by being overly-conservative. A draft FS was prepared about one year ago. Tetra Tech feels it has enough data to evaluate the next steps at Site 45. Regulatory review comments to the RI Addendum appear to echo enough data. DHEC feels that remedy selection must get started since releases from source material continue. EPA agrees there is enough data for groundwater, but Tetra Tech failed to state there is enough data for vapor intrusion in the RI Addendum. Mark said that

getting going on addressing the source material will close-off the VI pathways. EPA also stated the groundwater discussion fell short by not including enough USGS data, and two pathways (surface water and sediment) were not mentioned at all. Mark said that getting going on addressing the source material will also mitigate any releases to surface water or sediment.

DHEC asked why comments could not be addressed in the FS instead of issuing another RI Addendum in order to move forward. Per EPA, it is a legal issue that the RI Addendum needs to be corrected, but the FS can move forward while the RI is being corrected. DHEC reiterated that the RI Addendum has adequate detail to start evaluation of remedial solutions, and while another revision is prepared, migration continues.

DHEC noted that some monitoring wells did not have any identification and other monitoring well caps were cracked and need to be repaired.

Discussion ensued regarding the storm sewer pipe that needs to be repaired and if it could be included with Site 45. The Depot suggested if successful in obtaining funding, the pipe could be repaired. If not, the Team will need to make a decision. DHEC is concerned about the continuing release to the marsh. The Navy said that based on the chemical properties of the cVOCs, evaporation within the sewer should prevent discharge to surface water. The source needs to be addressed by the RAC. DHEC feels the lining of the pipe should stop migration to the southern plume and stop the discharge to the marsh. Per Tetra Tech, the next phase of the investigation for sediment is included with Site 14. EPA suspects vapor intrusion will get worse with the sealing of the pipes.

<u>Path Forward for Site 45</u>

DHEC:
- Move forward on the FS and address comments for the RI Addendum in the FS.
- Expects the FS to include discharge to storm water.
- Condition of monitoring wells needs to be addressed.
- Leave RI Addendum as is with Tetra Tech responding to comments by saying addressed in FS.
- Cannot delay doing something about the discharge to the marsh.

Navy:
- Ensure USGS data discussed more in the RI Addendum.
- Discuss fate and transport of contaminants in the RI Addendum.

Depot:
- Resolve the storm line issue (lining the pipe).

EPA:
- Move forward on FS.
- Base the RI Addendum on what is in the FS.
- State in RI Addendum that surface water and sediment will be addressed with Site 14.
- Present Monitoring of subslab soil gas as a remedial action in FS.
- Address vapor intrusion in FS.
- Need to have data-support basis for selecting an action and should be pathway specific. Currently, do not have enough data.
- Legally, must have an approved RI Addendum (risk assessment is in the RI, not the FS).

Tetra Tech:

- Current data does not show the need for a VI action.

Consensus Item: The Team reached consensus that the path forward for Site 45 is to issue a draft combined RI/FS document that addresses all RI Addendum comments, addresses sewer discharge and vapor intrusion, includes soil gas monitoring as a remedial action, and adds USGS data in an appendix.

Site 14 will remain just stormwater and sediment. Remedial Action at Site 45 is already funded and could be implemented as a full-scale pilot study after the FS approval and agreement of selected remedy.

2.4 Tier II Update

Need a presenter from EPA (and title) at the Tier I / II meeting. Still need any "hot" topics from Tier I teams to discuss at the Tier I / II meeting. The state is planning on discussion LUC issues. Lawyers (legal panel) from different commands and different regulatory agencies will be at the meeting. A separate meeting will be held after the Tier II meeting (late Monday) to discuss the Recruit Depot, MRP, and FFA. Tier III is invited to the meeting to discuss MRP. The Tier I / II meeting will be held on Tuesday and part of Wednesday.

Action Item: Team members are to send any discussion topics for the legal panel at the Tier I / II meeting to Sarah.

Action Item: Sarah and Stacey to get Tier I / II meeting agenda to Team members.

2.5 Tier II Presentation

It was recommended that an alternate presentation be prepared in case the hydro person does not want to give the current presentation (which is not finished) without an EPA or Navy risk assessor present. Any issues and/or questions regarding risk will not able to be answered. Questions can be captured and answered later via the meeting website (posted with presentation).

It was suggested that Dr. Warren help with or possibly give a presentation; however, need representation of what EPA and the Navy is expecting. Other Tier I Team presentations include MRP and Community Relations. A backup presentation on the science of PCBs, congeners, and Aroclors was suggested.

Consensus Item: The Team reached consensus that questions regarding the presentation can be captured and answered later via the meeting website (posted with presentation).

Action Item: Lila to inform Sarah of status of Tier II presentation (current presentation or backup).

2.6 Exit Strategy

The Final SI Report was issued as a Final. However, DHEC needs further information on some sites where no action was proposed, and EPA has not yet provided concurrence.

The 5 Year Review is the next priority for EPA.

Action Item: Meredith to send proposed Exit Strategy revisions to Team members.

2.7 SMP / Schedule Review

Site 3
The D2 HHRA/ERA is in review.
The Tech Memo rework is in progress.

Site 5
The UFP SAP CSM is being updated due to the extensive fill in the area. DHEC does not feel groundwater sampling will be necessary; however, concerned about sediment sampling and sediment (fill) not being related to Site 5. Tetra Tech will issue a draft Response to Comments.

Site 8 (A+B)
The SAP is in progress.

Sites 9/16
The SAP will roll into the Site 55 SAP.
The schedule will be changed to reflect decisions from this meeting.

Site 14
The revised DQO/RTC date, based on the yesterday's discussion, needs to be changed to two weeks from Friday.

Sites 27/55
DQO comments have been received. SAP and RTC are in progress.

Site 45
DHEC and EPA RI/RFI Addendum comments have been received. The RTC is in progress. An RI/FS will be issued.

The EPA pilot test was conducted. Final report from Geosyntec has been received. The Treatability Study is due to the Navy in 1 week for distribution to Team.

The FS (now an RI Addendum/FS) is in progress.

MRP
The SI Reports are in progress.

SI/CS
DHEC comments have been received.

SWMU 53
The PA document is on hold pending determination of the path forward.

Team Document Review Priorities (highest to lowest):
5 Year Review – DHEC suggested requesting a 20-day extension for the 5 Year Review.
Site 45 ASU Work Plan
SI/CS
Site 27 SAP
Site 1 Annual Report
Site 12 Annual Report
Site 45 RTC

Action Item: Mark to update the schedule and deliverables summary with changes made during the April 2010 meeting and email to Team members.

2.8 Meeting Review and Closeout

Next Meeting
The next meeting is scheduled for June 8-9, 2010, in Columbia, SC beginning at 1:00 p.m. on the 8th and concluding at an unspecified time on the 9th. Lila Llamas will be the Team Leader, and Mac McRae will be the Time Keeper.

Agenda Items

Check In/Agenda/Action Items	Leader/All	30 min
Training	Pat	60 min
Site 3 (#1 priority) Path forward	Mark	60 min
Site 14 DQO comments	Mark/Peggy	30 min

Site 27 / Site 55 RTCs to DQOs (action levels)/Schedule/Status	Mark/Peggy	60 min
MRP (high priority) Status update	Mark	30 min
Site 45 Update or review?	Mark/Joe	60 min
5 Year Review Informal comments?	Charles	15 min
Tier II Update	Tier II Link (Sarah)	30 min
Exit Strategy Review	Charles	45 min
SMP, Schedule Review	Charles/Mark	30 min
Sites 40 and 42, Waste Water Treatment Plant	DHEC	30 min
Meeting Closeout	All	60 min
Last minute topics and parking lot items	All	? min

Conference Calls
None

Tentative Meeting Dates/Proposed Location
September 14-15, 2010 MCRD Parris Island, TRC Meeting
November 16-17, 2010 DHEC, Columbia, SC

Action Item, Consensus Item, and Parking Lot Review
Action items, consensus items, and parking lot items were reviewed and are provided on the following pages.

Plus/Delta

+	Δ
Good discussions	Too much time spent rehashing topics
Moving forward with Site 45	Get to consensus sooner
Annie speaking up	Some conversations more heated than needed
½ day, ½ day meeting	Not more consensus
Some agreements reached	Keep too many balls in the air as a Team
Didn't give up before getting an agreement on Site 45	Execution of consensus items (being represented accurately) and deliverables
Consensus on path forward for Site 27	Low blows/personal attitudes
Got through relatively painful discussions	Further discussions on information – make sure captured correctly
Dr. Warren's discussion	
Site 14 decisions	
Mark's MRP presentation to TRC	
Pat's help walking through issues	
Stacey walking Team through Site 45	

Facilitator Feedback

Overall may have seemed painful, but the Team did a good job working through issues.

Action Items
MCRD Parris Island Partnering Meeting
April 27-28, 2010

Action Items Developed March 27-28, 2010

Item	Responsible	Action Item	Due Date
03.10.1.2.1	Sarah Reed	Get information on an interim replacement for Dave Barclift (for Site 3) to Charles.	
03.10.1.2.2	Navy	Decide if a concurrent review of the Site 3 Risk Assessment is acceptable or not.	
03.10.1.4.1	Mark	Ensure the monitoring well request for Site 27 was resubmitted to DHEC.	
03.10.1.4.2	Mark	Prepare schedules based on different scenario possibilities at Site 27 and send to Charles.	
03.10.1.4.3	Mark	Arrange a conference call with Team members and EPA personnel in Ada, Oklahoma regarding the Site 55 field screening sampling technologies and approach.	
03.10.1.6	Peggy and Mark	Contact Kent regarding sampling techniques at Site 14.	
03.10.2.4.1	Team	Send any discussion topics for the legal panel at the Tier I / II meeting to Sarah.	
03.10.2.4.2	Sarah and Stacey	Get Tier I / II meeting agenda to Team members.	
03.10.2.5	Lila	Inform Sarah of status of Tier II presentation (current presentation or backup).	
03.10.2.6	Meredith	Send proposed Exit Strategy revisions to Team members.	
03.10.2.7	Mark	Update the schedule and deliverables summary with changes made during the April 2010 meeting and email to Team members.	

Action Items Developed February 2, 2010

Item	Responsible	Action Item	Due Date
02.10.1.2.3	Mark	Send Meredith 3 copies of the DQOs for the Parade Deck SAP and Fiber Optic Vault Area SAP (with cover letters).	**Done**
02.10.1.3.1	Mark	Send a hard copy of the Site 14 DQOs to Team members (with cover letter).	**Done**
02.10.1.3.2	Mark	Arrange a 23 March conference call with Peggy and Team to discuss the Site 14 DQOs.	**Done**
02.10.1.4	Tim	Send the MEC Report to Team members.	**Done**
02.10.1.5	Tim	Review the Site 1 Long-term Monitoring Plan regarding sediment sampling (what was required and was it done) and provide the information to the Team.	Ongoing 12 Feb 2010
02.10.1.6.1	Mark	Schedule a conference call with Tetra Tech, USEPA, and SCDHEC risk assessors regarding the risk assessment performed at Site 3.	**Done**
02.10.1.6.3	Team	Develop a path forward for the Site 3 ROD.	Ongoing
02.10.1.9.1	Mark/Charles	Develop a Five Year Review schedule.	**Done** – Charles provided the baseline dates.

02.10.1.9.2	Mark	Send a pdf of the updated schedule to Team members.	**Done**
02.10.1.10	Charles	Send updated Exit Strategy to Team members for comment before the next meeting.	**Done**

Action Items Developed September 15-16, 2009

Item	Responsible	Action Item	Due Date
09.09.1.3.4	Mark	Evaluate background data options for Site 27.	**Ongoing** 10/9/09
09.09.1.3.5	Mark	Review NCP for definition of principal threat waste and applicability to 270,000 ppm DDT.	**Done**

Action Items Developed May 18-20, 2009

Item	Responsible	Action Item	Due Date
05.09.2.2.3	Tim H.	Provide building construction date and solvent type information to Team members.	**Done – will be provided at April meeting**

Previous Action Items

Item	Responsible	Action Item	Due Date
A0801-03	Heber	Provide an engineering analysis to support demolition materials disposal (temp lodging 200). Information recently received. Will try to have done by May 2010.	**Ongoing** By 03-01-2009

Consensus Items
MCRD Parris Island Partnering Meeting
April 27-28, 2010

The Team reached consensus to approve the February 2010 minutes as final.

The Team reached consensus to proceed at risk with sampling all of Site 27 to include the installation and sampling of one temporary groundwater monitoring well on each side of "line" (for a total of two temporary monitoring wells) at SO 28 without step outs on the eastern side. If excavation occurs on the western one-half of SO 28 and if the eastern well boring is contaminated, clean fill going into the western one-half of SO 28 must be resampled prior to excavation of the eastern one-half of SO 28.
The Team reached consensus that Sites 9 and 16 will remain administratively linked to Sites 27 and 55.

Team members reached consensus to the approach (see below) at Site 14.

	SED	**SED**
SW	Yes	Yes
SW	No	No

SW + SED = Yes → RI (compare to background)
SW + SED = No → NFA
SW (No) + SED (Yes) → comparison to background (yes → RI – no → NA)
SW (Yes) + SED (No) → need more information → RI (likely)

The Team reached consensus that the path forward for Site 45 is to issue a draft combined RI/FS document that addresses all RI Addendum comments, addresses sewer discharge and vapor intrusion, includes soil gas monitoring, and adds USGS data in an appendix.

The Team reached consensus that questions regarding the Tier I / II meeting presentation can be captured and answered later via the meeting website (posted with presentation).

Parking Lot Items
MCRD Parris Island Partnering Meeting
April 27-28, 2010

Parking Lot Items from April 2010

Sites 40 and 42, Waste Water Treatment Plant and associated piping

5 Year Review

Parking Lot Items from April 6, 2010, Conference Call

CS/SI Report

Parking Lot Items from February 2010

Action levels for LNAPL at Site 27 – will be commented on and resolved as part of the RTC.

Topic for joint Tier I / Tier II meeting in May – PCB lessons learned

APPENDIX B

FIELD SCREENING MANUFACTURERS INSTRUCTIONS

SDIX QuickChek®

for Petroleum Hydrocarbons

(Petroleum Hydrocarbons/BTEX)

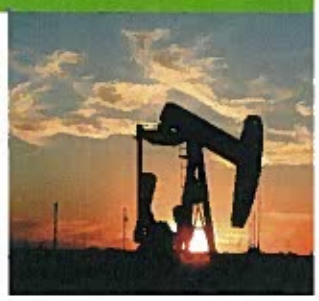

Former Brand Name	RaPID Assay®	PetroFLAG®
Technology	Magnetic particle immunoassay	Turbidimetric
Result Type	quantitative and semi-quantitative	quantitative
Sample Throughput	1-50 samples/hour	1-30 samples/hour
Time to Results	60 minutes	10-15 minutes
EPA SW-846 Method		9074
Storage Shelf Life	refrigerated 1 year from date of manufacture	ambient 1 year from date of manufacture
Training Level	medium/high recommended	medium recommended
Instrument	RPA-II photometric analyzer	PetroFLAG analyzer
Application Matrix and Detection Limits		
Application	Soil/water	Soil
Range of Detection	soil: 1-30 ppm	10-50,000 ppm (TPH)
	water: 0.02-3 ppm (as TPH)	Detection range varies by fuel source. Consult product manual
	Detection range varies by fuel source. Consult product manual	Recommended for heavy chain hydrocarbons (DRO & higher)

111 Pencader Drive • Newark, DE 19702 USA • P 302.456.6789 • F 302.456.6782 • T 800.544.8881 • www.sdix.com

All rights reserved ©2010 Strategic Diagnostics Inc d/b/a SDIX Printed in USA Revised 4/10

SDIX QuickChek®

Remediation Testing Products

	Technology	Coated tube immunoassay	Magnetic particle immunoassay
	Result Type	quantitative and semi-quantitative	quantitative and semi-quantitative
	Sample Throughput	1-10 samples/hour	1-50 samples/hour
	Time to Results	30 min/run	60 min/run
Application Matrix and Detection Limits or Limits of Quantification			
PCB	soil	0.5 ppm	< 0.5 ppm
	water	50 ppb*	0.2 ppb
	wipes	5µg/wipe	< 5µg/wipe
	concrete	0.5 ppm	0.5 ppm
BTEX	soil	n/a	0.9 ppm
	water	n/a	0.09 ppm
TPH	soil	n/a	10 ppm (GRO)
	water	n/a	1 ppm (GRO)
PAH	soil	n/a	0.2 ppm
	water	n/a	2.0 ppb
Carcinogenic PAH	soil	n/a	10 ppb
	water	n/a	0.2 ppb
TNT		non-immunoassay	
	soil	0.7 ppm	n/a
	water	0.9 ppb**	n/a
RDX		non-immunoassay	
	soil	0.8 ppm	n/a
	water	3.8 ppb	n/a
PCP	soil	n/a	0.1 ppm
	water	n/a	0.1 ppb
Pesticides	Kits available for numerous pesticide analytes in soil and water. Contact SDIX for the MDL's various analytes		

** *Protocol not validated*

111 Pencader Drive • Newark, DE 19702 USA • P 302.456.6789 • F 302.456.6782 • T 800.544.8881 • www.sdix.com

All rights reserved ©2010 Strategic Diagnostics Inc d/b/a SDIX Printed in USA Revised 4/10

Remediation, Assessment & Industrial Testing

EnviroGard®

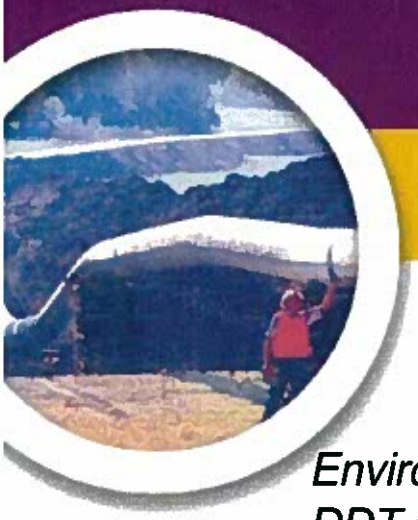

EnviroGard DDT in Soil Test Kit

Features

- rapid and simple field testing procedures
- semi-quantitative results at set calibrator (action) levels
- test up to 17 samples at one time
- results in less than 30 minutes
- training recommended
- coated tube immunoassay
- EPA SW-846 Method # 4042

Test Result Type

- Semi-quantitative or qualitative

Samples per Kit

- Up to 17 soil sample test results can be obtained per kit, depending upon the number of runs and action levels used. (Kit includes 20 antibody coated tubes)
- Typical applications use two or three calibrators and one negative control.

Assay Range

- Semi-quantitative results (greater or less than) at calibrator (action) levels of 0.2, 1.0 and 10.0 ppm DDT.
- Minimum detection level (MDL) is 0.2 ppm DDT.
- No maximum screening level as extracts can be diluted into test range.

Sample Preparation

- Soil samples require prior extraction using the SDI Sample Extraction Kit (sold separately).
- The Sample Extraction Kit provides material for 12 soil sample extractions with methanol.

Sampling Time

- Soil extraction time is typically 2 minutes per sample plus assay run time of approximately 30 minutes.

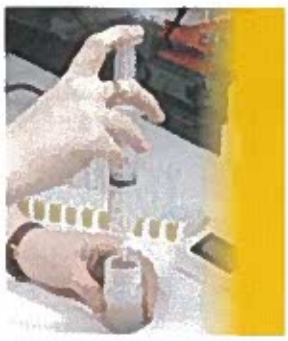

SDI

Remediation, Assessment & Industrial Testing

EnviroGard®

Strategic Diagnostics Inc.

111 Pencader Drive
Newark, DE USA 19702

302.456.6789 *tele*
800.544.8881 *tele*
302.456.6782 *fax*

www.sdix.com

Basic Test Procedures

- Extract the soil sample using the SDI Sample Extraction Kit.
- Pipet DDT assay diluent into the antibody coated tubes, then add either DDT calibrator or sample extract to the tubes along with DDT enzyme conjugate.
- Wait for 15 minutes, then decant and wash the tubes.
- Add subatrate.
- Wait for 10 minutes, add stop solution.
- Read the absorbance using a photometer, and interpret the results. (Refer to DDT Soil Test Kit Instruction Guide procedures.)

Specificity

The EnviroGard DDT immunoassay test does not differentiate between DDT and other organochlorines. The table below shows compounds at the minimum detection limit (MDL) - an approximate concentration required to yield a positive result at the lowest standard. The IC50 is the concentration required to inhibit one-half of the color produced by the negative control. It is also used to calculate cross-reactivity values to similar compounds.

DDT in Soil (ppm)

Contaminant	MDL	IC50
p,p'-DDT (kit calibrator)	0.2	1.25
p,p'-DDD	0.05	0.3
p,p'-DDE	0.6	3.6
o,p'-DDT	14.9	93
o,p'-DDD	1.76	11
o,p'-DDE	14.9	93
DDA	0.01	0.04
Chloropropylate	0.01	0.08
Chlorobenzilate	0.06	0.35
Dicofol	0.3	2
Tetradifon	2.2	14

Test Kit Components

- 20 antibody coated tubes.
- Enzyme conjugate, color developing and color stop solution reagents.
- Calibrators for 0.2, 1.0 and 10.0 ppm DDT.
- Negative control calibrator.
- Test tube rack, reagent and calibrator holders, and pipet tips.
- Test kit instructions.

Storage & Precautions

- Shelf life typically one year from date of manufacture, with specific kit expiration date information provided on product packaging.
- Components must be stored at 39° to 46°F (4° to 8°C) when not in use.
- Storage at ambient temperature 64° to 81°F (18° to 27°C) is acceptable for day of use.
- Kits must be brought to 64° to 81°F (18° to 27°C) before use.
- Do not expose substrate to direct sunlight.
- Portable spectrophotometer battery should be charged prior to use.

Required Test Materials

	SDI Part #
• EnviroGard DDT Soil Kit	7310000
• Sample Extraction Kit (Soil)	73100EB
or	73100EA

Required Test Equipment

- Field Soil Lab (Accessory Kit) 6050400
  which includes:
  Repeating pipette*
  Adjustable pipette*
  Balance*
  Repeating Pipette tips*
  Timer*
- Differential Spectrophotometer*,
  110V 6000001
  220V 6000002

OR

- Field Lab System Rental 6997020
  (includes items marked "*" above)

Other Recommended Materials

- Latex gloves
- Absorbent paper for blotting test tubes
- Liquid and solid waste containers
- Calculator

Manufacturers of Petroleum & DNAPL Screening Kits

OIL-IN-SOIL™

Oil Screening Test Kit

Instruction Manual

© OIL IN SOIL, LLC 2004

OIL IN SOIL, LLC
6 Queen Anne Road
Levittown, PA 19057 USA
Tel: (215) 687-0355
www.oil-in-soil.com

"Congratulations on purchasing the easiest and fastest test kit available today for screening hydrocarbons and DNAPL!"

INTRODUCTION:
The OIL-IN-SOIL™ screening kit is composed of a styrene bottle; a label indicating recommended soil and water levels; a small Styrofoam ball, and a cube containing finely dispersed dyes which is glued to the inside of the jar lid.

In the Sudan IV version of the screening test kit the cube is impregnated with two dyes:

- A deminimis amount of SUDAN IV, a Red Azo Dye soluble in most DNAPL and petroleum which stains the oils and petroleum products, and a
- Fluorescent Green/Yellow water soluble dye to color the water and provide a visual backdrop for the red dye.

The dual dye method is employed to improve detection by the user. The other soil test kits all contain the single dye indicated by the product name.

USING THE KIT:
OIL-IN-SOIL kits are designed with ease of use in mind. Simply follow the instructions on the label:

Step 1 Fill the bottle with soil to the line "*Fill soil to HERE*"
Note: Do not compact the soil.
Step 2 Fill the bottle to the line "*Fill water to HERE*"
Note: ensure water is warm enough to dissolve the cube.
Step 3 Replace cap on bottle and shake jar until cube is completely dissolved.

OUR GUARANTEE:

If DNAPL or petroleum is present in the sample a red meniscus (or red spots on the side of the jar) will appear within 30-60 seconds. If color is not immediately apparent in the jar – check the polystyrene ball. The presence of ANY color on the ball (even a faint pink halo or hue) indicates the presence ore more than 500ppm TPH in that sample material. Conversely, a “clean” ball indicates that there is less than 500ppm TPH.

Note: Most DNAPLs dissolve styrene. Therefore, red spots may appear on the sides of the jar.

Note: Whenever possible, use potable water for the screening tests. However, salt water can be used if necessary.

Cold water can inhibit the rapid release of viscous hydrocarbons from soil and cause False Negative results. Therefore, at temperatures below 68º F (20º C), we recommend users carry a thermos of hot water for field testing purposes.

RECOMMENDED PROTECTIVE EQUIPMENT:

Please follow safety instructions outlined in the MSDS. Always use gloves and safety glasses when using the OIL-IN-SOIL™ kits.

DISPOSAL OF USED KITS:
As per the MSDS and local regulations.

MANUFACTURER'S GUARANTEE:

We will replace any broken or defective kits purchased.

If you are not satisfied with our product, return any defective kits to OIL-IN-SOIL for a refund. We reserve the right not to provide refunds if the kits have been tampered with in any way, or if not used in accordance the OIL-IN-SOIL MSDS and Instruction Manual.

OIL IN SOIL, LLC
Levittown, Pennsylvania
USA

info@oil-in-soil.com

Material Safety Data Sheet

To comply with OSHA's Hazard Communication Standard, 29 CFR 1910.120

OIL-IN-SOIL Test Kit

CAS 3 85-83-6 (SUDAN IV; OIL REB"B")

SECTION I – Manufacturer and International Distributors

Manufacturer:
OIL IN SOIL, LLC
6 Queen Anne Road
Levittown, PA USA 19057
1 (215) 687-0355
info@oil-in-soil.com

All Products are produced in and shipped from Pennsylvania USA
Date of MSDS Preparation 6/7/96

SECTION II --Composition Information on Ingredients

Dyes are dispersed in a sugar cube that has an approximate weight of 2.4 g. The red dye, is a standard dye used throughout the oil industry to color the oil red, is a possible mutagen but its weight is less than 0.1 percent. The fluorescent green dye comprises less than 1 percent of the weight of the dye cube and is not hazardous.

SECTION III -- Physical Characteristics

Property

Melting point - 186 ^{o}C
Specific gravity - 1.58

Solubility in water -sugar cube - very soluble
(water soluble dye - very soluble)
(red oil dye - insoluble in water soluble in oil or other hydrocarbons)

Flammability limit - Unknown
Extinguishing media - Water or foam
Special Fire Fighting Procedures - None

SECTION IV -- Reactivity Data

Stability - All Components are STABLE.
Incompatibility - None
Hazardous decomposition production - Stable compounds
Hazardous Polymerization - Will not occur
Conditions to Avoid - Fire

SECTION V -- Health Hazard Information

First Aid
If swallowed wash out mouth. If dye comes in contact with skin thoroughly wash area with soap and water.
Eye Contact
Flush eyes with large amounts of water for 15 minutes. Seek medical attention.
Skin Contact
Wash hands thoroughly with soap and water.

SECTION VI -- Spill, Leak and disposal Procedure

Spills and Leaks: Dig up the soil that kit material has spilled on. If spilled on hard surface soak up spill and wash with detergent and water.
Disposal: Dispose of soil with oily soil. Dispose of cleanup absorbent with other absorbent material.

SECTION VII -- Special Precautions

Respiratory Protection:
None required if dye cube not crushed to powder. If crushed use dust mask.

Ventilation:
Use in open air.
Protective Gloves:
Always use protective vinyl or polyethylene gloves.
Eye Protection:
Always wear safety glasses

SECTION VIII --Special Precautions
Storage Information:
Keep away from temperatures greater than 140°F (Adhesive for dye cube may melt). Dye cube may crack with sudden shock at temperatures less than 32 ^{o}F. Avoid inhaling any dust from dye cube!

DOT Class - Non flammable

FLUTe™ Flexible Liner Underground Technologies, Ltd. L.C.
For a medley of innovative designs
6 Easy St., Santa Fe, NM 87506
505-455-1300, www.flut.com

Procedure for Placement of FLUTe NAPL Reactive Cover in Core Samples

Purpose
This simple procedure describes the FLUTe® method of assessment of core for the presence of NAPL in the pore fluids of the core.

The method
The FLUTe NAPL reactive cover material is designed for the mapping of the LNAPL or DNAPL in the pore fluids of geologic materials. The hydrophobic reactive material is designed to wick NAPL pure product only. The pure product will either leach the dye stripes on one side of the fabric into the fabric producing a stain pattern on the unstriped side of the fabric, or if the NAPL does not have solvent characteristics, it will only stain the fabric as either like an oily stain on paper or according to the color of the NAPL. Solvents like TCE will produce a strong stain pattern on the white side of the fabric.

For cores recovered from core barrels, the fabric can either be wrapped on the outside of the core or placed inside the core after it has been slit longitudinally. In either case, the primary concern is to minimize the evaporation of the NAPL before it can be wicked into the fabric. The preferred approach is to split the core quickly and then placing a folded strip of the fabric in the slit and quickly closing the core against the fabric strip. Wrapping the exterior of the core with a strip of polyethylene film helps to clamp the core against the fabric and also prevent evaporation of NAPL in the core to the atmosphere before it can be absorbed. The core does not need to be competent and may be slit while in an exterior plastic sheath.

The folded fabric strip shown in the figure should be twice the width of the core, and when folded should have the color stripes on the outside of the fold. This allows the NAPL to carry the dye from the striped side to the white side of the fabric from each half of the core. The white side of the fabric is later examined for the stain.

The NAPL is wicked very quickly into the fabric and may not require more than a few minutes of exposure to the core. A reasonable exposure time is 10-15 minutes. However some users prefer to leave it clamped together for as long as a hour. The fabric will wick the NAPL as long as it is in contact with the NAPL.

When the exposure time has passed, the core can be unwrapped and the folded strip removed from the core. By unfolding the strip, the normally white side of the strip is then examined for NAPL stains. FLUTe provides a video of the development of a stain to help the recognition of a significant stain (request the video at info@flut.com.

For clear NAPLs, the stain may only be like that of an oil stain on white paper (a translucent off-white appearance). For weak solvents like gasoline, the stain is a transfer of the stripe pattern to the white side. For strong solvents like TCE, the stain is a blotch like a water color application and the stripes are very much distorted and mixed. For coal tar, the stain is usually black to brown spots or streaks. For many NAPLs the dye is also combined with the color of the NAPL, often a brown stain.

This ex-situ technique depends upon the pore fluids being extracted with the core. For sonic core, there is a different technique that uses an exterior cover to contain the core as

it is extruded from the core barrel. For a description of that technique, contact FLUTe at www.flut.com.

Preservation of the record

Once the strips are removed from the core, they should be labeled and photographed. The stains are relatively permanent, but due to wicking, any heavily stained strips should not contact other strips or be stored in a manner to contact themselves so as to spread the stains. One simple technique is to lay the strip on a sheet of polyethylene and roll it up. However, the more durable record is the digital photograph.

Fig. 1

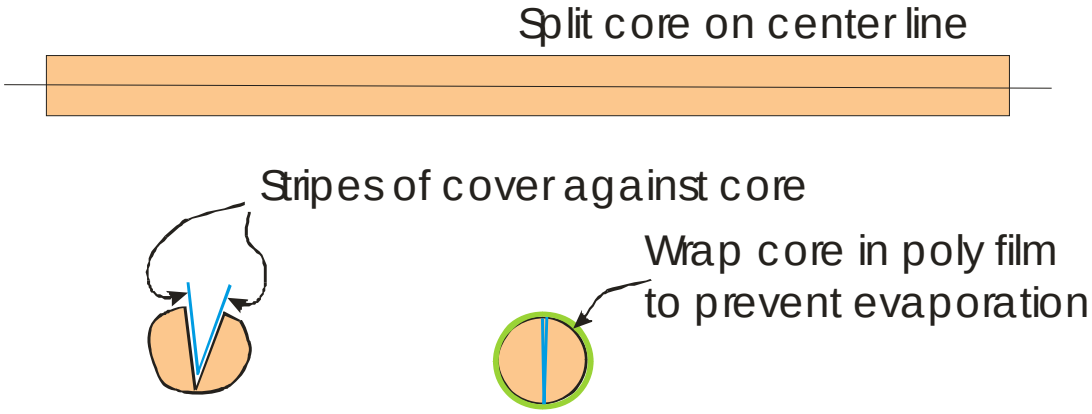

Stains on covers from direct push holes

Stains on cover in 3” cored hole

Some of the NAPLs and DNAPLs that react with the NAPL FLUTe system

We, and our customers, have tested the following compounds with our NAPL FLUTe reactive cover:

- Motor oil, gear oil, thread cutting oil
- Gasoline
- Diesel fuel
- Creosote
- Chlorobenzene
- Dichlorobenzene
- Trichloroethylene
- Tetrachloroethylene
- Dichloroethane(also called ethylene dichloride)

- Methylene chloride (also dichloromethane)
- Carbon tetrachloride
- Benzene
- Lindane (an insecticide)
- Acetone
- Xylene
- Toluene
- Dowtherm
- PCBs

These compounds all react with the reactive cover, but in somewhat different fashion. The motor oil, gear oil, Dowtherm, PCBs, and thread cutting oils do not leach the dye from one side to the other, but they do wet the cover to a much more translucent state. It looks like oil on paper. Some oily compounds show extensive staining from the color of the compound. That is especially true for creosote.

The other compounds all leach the dye from one side to another producing a blotch of mixed color. The trichloroethylene leaches the dye somewhat more aggressively than the tetrachloroethylene, but it is hard to tell the difference when the cover is retrieved. Acetone, xylene and toluene all evaporate very quickly and may leave a muted stain if the stain is not obtained underground and/or under water. There has been a report of the dye being entirely washed out of the cover by a massive stain, but even then the edges and striped side of the cover show the effect.

The gasoline and diesel fuel leach the dye less aggressively than the other leaching compounds. Consequently, there is extensive wetting of the cover, with wicking for long distances with the fuels, but the dye migration is slower. However, when the cover dries, there is clear evidence that the dye is leached from the from to the back side by these fuels. Gasoline actually bleeds the red dye stripe more than the other two colors.

For more information on the utility of the NAPL FLUTe system, call 1-888-333-2433.

MiniRAE 2000

Portable VOC Monitor
PGM-7600

OPERATION AND MAINTENANCE MANUAL

(Document No.: 011-4001-000)
Revision E, May 2005

RAE SYSTEMS

ISO 9001 CERTIFIED

ATTENTION!

For European Applications

A. CE 0575 Ex II 1G/2G
   DEMKO 03 ATEX 0204759X
   Eex ia IIC T4
B. Recharge batteries only in non-hazardous locations.
C. Do not connect external cable to serial interface jack in hazardous locations.
D. Use RAE Systems Adapter P/N 500-0072 for connection to communication port and charging jack only in a non-hazardous area.

Table of Contents

1. GENERAL INFORMATION 1-1

1.1 General Specifications 1-2

2. OPERATION OF MINIRAE 2000 2-1

2.1 Physical Description 2-2

2.2 Keys and Display 2-3

2.3 Power On/Off 2-4

2.4 Operation 2-5

2.4.1 Survey Mode 2-6

2.4.2 Hygiene Mode 2-14

2.5 Alarm Signals 2-16

2.6 Preset Alarm Limits and Calibration 2-18

2.7 Integrated Sampling Pump 2-19

2.8 Back Light 2-20

2.9 Datalogging 2-21

3. OPERATION OF ACCESSORIES 3-1

3.1 Standard Kit and Accessories 3-2

3.2 Optional Accessories 3-5

4. PROGRAMMING OF MINIRAE 2000 4-1

4.1 Programming Mode 4-2

4.2 Keys for Programming Mode 4-3

4.3 Entering into Programming Mode 4-4

4.4 Calibrate and Select Gas 4-5

4.4.1 Fresh Air Calibration 4-8

4.4.2 Span Calibration 4-9

4.4.3 Select Cal Memory 4-11

4.4.4 Change Span Value 4-12

4.4.5 Modify Cal Memory 4-13

4.4.6 Change Correction Factor 4-14

4.5 Change Alarm Limits 4-15
4.5.1 Change Low Alarm Limit 4-17
4.5.2 Change STEL Limit 4-18
4.5.3 Change TWA Limit 4-19
4.6 View or Change Datalog 4-20
4.6.1 Reset Peak/Minimum 4-21
4.6.2 Clear Data 4-223
4.6.3 Change Data Period 4-2324
4.6.4 Change Average Type 4-245
4.7 Change Monitor Setup 4-256
4.7.1 Change Operation Mode 4-267
4.7.2 Change Site ID 4-278
4.7.3 Change User ID 4-2829
4.7.4 Change Alarm Mode? 4-290
4.7.5 Change User Mode 4-301
4.7.6 Change Date 4-312
4.7.7 Change Time 4-323
4.7.8 Change Lamp 4-334
4.7.9 Change Unit 4-345
4.7.10 Change Dilution Ratio 4-356
4.7.11 Change Output? 4-367
4.7.12 Change DAC Range? 4-378
4.7.13 Set Temperature Unit? 4-389
4.8 Exit Programming Mode 4-390
5. THEORY OF OPERATION 5-1
6. MAINTENANCE 6-1
6.1 Battery Charging and Replacement 6-2
6.2 PID Sensor & Lamp Cleaning /Replacement 6-4
6.3 Sampling Pump 6-7
6.4 Turning on the UV Lamp 6-9
7. TROUBLESHOOTING 7-1
7.1 Troubleshooting Table 7-2
APPENDIX A. QUICK REFERENCE GUIDE A-2

⚠ WARNING ⚠

- Do NOT proceed before reading -

This manual must be carefully read by all individuals who have or will have the responsibility for using, maintaining, or servicing this product.

The product will perform as designed only if it is used, maintained, and serviced in accordance with the manufacturer's instructions.

CAUTION!!

To reduce the risk of electric shock, turn off power before removing the monitor cover. Disconnect the battery before removing sensor module for service. Never operate the monitor while the cover is removed. Remove monitor cover and sensor module only in an area known to be non-hazardous.

The model PGM-7600 equipment is classified as to intrinsic safety for use in class I, division 1, groups A, B, C, D, or non-hazardous locations only.

Special Notes

-1-

When the MiniRAE 2000 Monitor is taken out from the transport case and turned on for the first time, there may be some residual organic or inorganic vapor trapped inside the detector chamber. The initial PID sensor reading may indicate a few ppm. Enter an area known to be free of any organic vapor and turn on the monitor. After running for several minutes, the residual vapor in the detector chamber will be cleared and the reading should return to zero.

-2-

The battery of the MiniRAE 2000 monitor will discharge slowly even if it is turned off. If the monitor has not been charged for 5-7 days, the battery voltage will be low. Therefore, it is a good practice to always charge the monitor before using it. It is also recommended to fully charge the monitor FOR AT LEAST 10 HOURS before first use. See Section 7 for more information on battery charging and replacement.

WARNINGS

STATIC HAZARD: Clean only with damp cloth.

For safety reasons this equipment must be operated and serviced by qualified personnel only. Read and understand instruction manual completely before operating or servicing.

Use only RAE Systems battery packs, part nos. 012-3050, 012-3051 or 012-3052. This instrument has not been tested in an explosive gas/air atmosphere having an oxygen concentration greater than 21%. Substitution of components may impair intrinsic safety. Recharge batteries only in non-hazardous locations.

The calibration of all newly purchased RAE Systems instruments should be tested by exposing the sensor(s) to known concentration calibration gas before the instrument is put into service.

For maximum safety, the accuracy of the MiniRAE 2000 should be checked by exposing it to a known concentration calibration gas before each day's use.

AVERTISSEMENTS

DANGER RISQUE D'ORIGINE ELECTROSTATIQUE: Nettoyer uniquement avec un chiffon humide.

Pour des raisons de sécurité, cet équipment doit être utilisé, entretenu et réparé uniquement par un personnel qualifié. Étudier le manuel d'instructions en entier avant d'utiliser, d'entretenir ou de réparer l'équipement.

Utiliser seulement l'ensemble de batterie RAE Systems, la reference 012-3050, 012-3051 au 012-3052. Cet instrument n'a pas été essayé dans une atmosphère de gaz/air explosive ayant une concentration d'oxygène plus élevée que 21%. La substitution de composants peut compromettre la sécurité intrinsique. Ne charger les batteries que dans emplacements désignés non-dangereuse.

La calibration de toute instruments de RAE Systems doivent être testé en exposant l'instrument a une concentration de gaz connue par une procédure diétalonnage avant de mettre en service l'instrument pour la première fois.

Pour une securite maximale, la sensibilité du MiniRAE 2000 doit être verifier en exposant l'instrument a une concentration de gaz connue par une procédure diétalonnage avant chaque utilisation journalière.

1. GENERAL INFORMATION

MiniRAE 2000 Portable VOC Monitor (Model PGM 7600) is a compact monitor designed as a broadband VOC gas monitor and datalogger for work in hazardous environments. It monitors Volatile Organic Compounds (VOC) using a Photo-Ionization Detector (PID) with a 9.8 eV, 10.6 eV, or 11.7 eV gas discharge lamp. Features are:

- **Lightweight and Compact**
  -Compact, light weight (19 oz.) and rugged design
  -Built-in sample draw pump

- **Dependable and Accurate**
  - Up to 10 hours of continuous monitoring with rechargeable battery pack
  - Designed to continuously monitor VOC vapor at ppm levels

- **User Friendly**
  -Preset alarm thresholds for STEL, TWA, low and high level peak values. Audio buzzer and flashing LED display are activated when the limits are exceeded.

- **Datalogging Capabilities**
  -15,000 point datalogging storage capacity for data download to PC

MiniRAE 2000 consists of a PID with associated microcomputer and electronic circuit. The unit is housed in a rugged ABS + PC case with a backlit 1 line by 8 character dot matrix LCD and 3 keys to provide easy user interface.

1.1 General Specifications

Table 1.1

Portable VOC Monitor Specification	
Size:	8.2"L x 3.0"W x 2.0"H
Weight:	19.5 oz with battery pack
Detector:	Photo-ionization sensor with 9.8, 10.6, or 11.7 eV UV lamp
Battery:	A 4.8V /1250 mAH Rechargeable Nickel Metal Hydride battery pack (snap in, field replaceable)
Battery Charging:	10 hours charge through built-in charger
Operating Hours:	Up to10 hours continuous operation
Display:	1 line by 8 characters 5x7 dot matrix LCD (0.4" character height) with LED back light automatically in dim light
Range, Resolution & Response time (t_{90}):	
Isobutylene (calibration gas)	
	0-99 ppm 0.1 ppm 2 sec
	100-1,999 ppm 1.0 ppm 2 sec
	2000-10,000 ppm 1.0 ppm 2 sec
Measurement Accuracy (Isobutylene):	
	0 – 2000 ppm: ± 2 ppm or 10% of reading.
	> 2000 ppm: ± 20% of reading
PID Detector:	Easy access to lamp and sensor for cleaning and replacement
Correction Factors:	Built-in 102 VOC gases
Calibration:	Two-point field calibration of zero and standard reference gas
Calibration Memory:	
	Store up to 8 separate calibration, alarm limits and span value
Inlet Probe:	Flexible 5" tubing
Keypad:	1 operation key and 2 programming keys

Direct Readout:	Instantaneous, average, STEL and peak value, battery voltage and elapsed time
Intrinsic Safety:	UL & cUL Class 1, Division I, Group A,B,C,D, Temperature Code T3C (US & Canada); CE 0575 Ex II 1G DEMKO 02 ATEX 0204759 Eex ia IIC T4 (Europe)
EM Interference:	No effect when exposed to 0.43 W/cm^2 RF interference (5 watt transmitter at 12 inches)
Alarm Setting:	Separate alarm limit settings for Low, High, STEL and TWA alarm
Operating Mode:	Survey or Hygiene mode
Alarm:	90 dB buzzer and flashing red LEDs to indicate exceeded preset limits, low battery voltage, or sensor failure.
External Alarm:	Optional plug-in pen-size vibration alarm or remote alarm
Alarm Mode:	Latching or automatic reset
Real-time Clock:	Automatic date and time stamps on data logged information
Datalogging:	15,000 points with time stamp, serial number, user ID, site ID, etc.
Communication:	Upload data to PC and download instrument setup from PC through RS-232 port
Sampling Pump:	Internally integrated. Flow rate: 450-550 cc/min.
Temperature:	0° to 45°C (32° to 113°F)
Humidity:	0 % to 95 % relative humidity (non-condensing)
Housing:	ABS + PC, conductive coating, splash and dust proof, will withstand 1 meter drop test with rubber boot
Attachment:	Wrist strap, rubber boot and belt clip

2. OPERATION OF MINIRAE 2000

The MiniRAE 2000 Portable VOC Monitor is a compact Monitor designed as a broadband VOC gas monitor and datalogger for work in hazardous environments. It gives real time measurements and activates alarm signals whenever the exposure exceeds preset limits. Prior to factory shipment the MiniRAE 2000 is preset with default alarm limits and the sensor is pre-calibrated with standard calibration gas. However, the user should test the instrument and verify the calibration before the first use. After the monitor is fully charged and calibrated, it is ready for immediate operation.

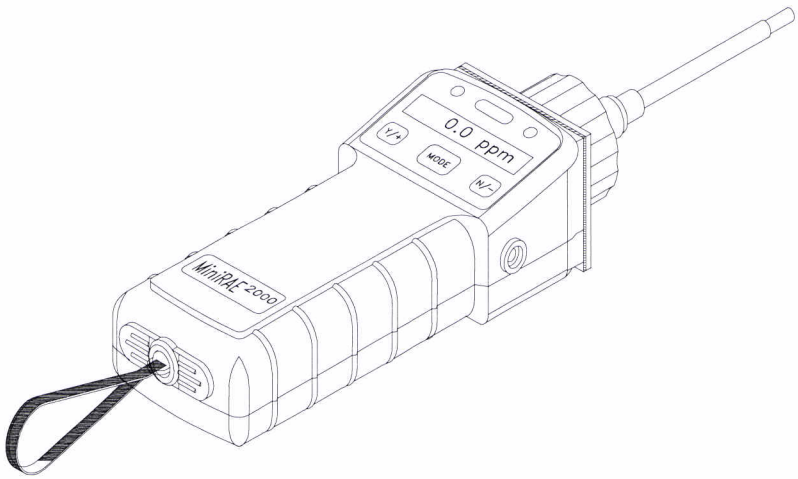

Figure 2-1 MiniRAE 2000

2.1 Physical Description

The main components of the MiniRAE 2000 Portable VOC monitor include:

- Three keys for user to interact with the monitor: 1 operation key and 2 programming keys for normal operation or programming of the monitor
- LCD display with back light for direct readout and calculated measurements
- Buzzer and red LED's for alarm signaling whenever the exposures exceed preset limits
- Wrist strap
- Charge contact for plugging directly to the charging station
- Gas entry and exit ports
- Serial communication port for PC interface
- External alarm and analog output port
- Protective rubber cover

2.2 Keys and Display

Figure 2.2 shows the LCD display and the keypad on the front panel of the monitor. The function of the 3 keys during normal operation are summarized below:

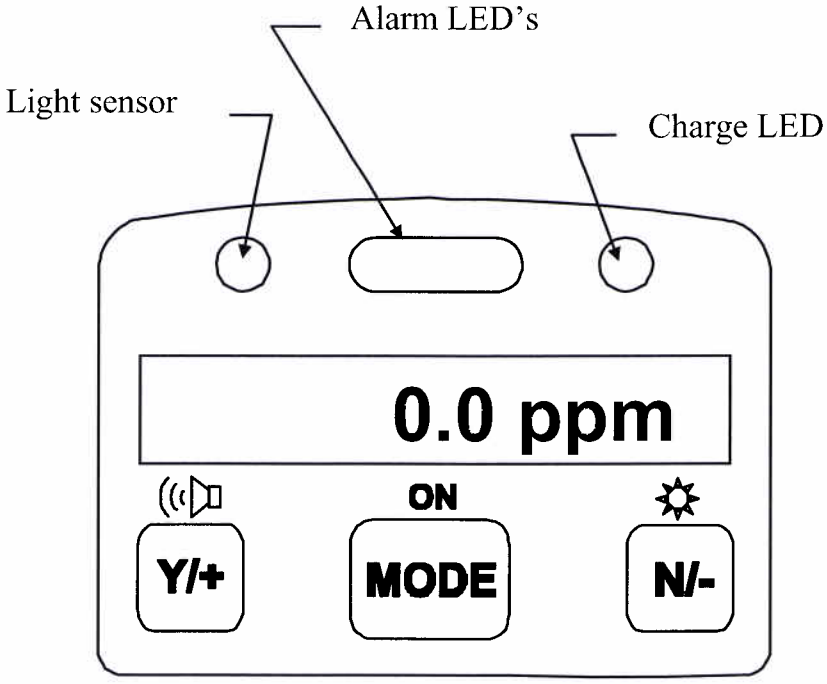

Figure 2-2 LCD Display and Keypad

Key	Function in Normal Operation
[MODE]	-Turn on/off the power* and step through menu items
[N/-]	-Toggle on/off the back light, negative acknowledge, decrease value
[Y/+]	-Start measurement, positive acknowledge, increase value value

* Pressing and holding **[MODE]** key for 5 seconds turns off the power to the monitor. Monitor will beep once per second and display countdown timer during power-down sequence. Press **[MODE]** key momentarily to step through menu items. To save time, press any key during message scrolling to skip to the end of the message.

2.3 Power On/Off

To turn on the MiniRAE 2000 portable VOC monitor, press **[MODE]** key for one second and release. The audio buzzer will beep once and the air pump will turn on. The display will show "ON!.." and then "Ver n.nn" to indicate the unit's current firmware version number. Next displayed are the serial number, the model number, Operating mode, current date and time, unit internal temperature, gas selected, high low, STEL, TWA/AVG alarm limits, battery voltage, and shut off voltage. Also displayed are internal mode settings such as User mode, Alarm mode, datalog time remaining and log periods in the respective order.

To turn off the MiniRAE 2000 portable VOC monitor, press and hold the **[MODE]** key for 5 seconds. The monitor will beep once per second during the power-down sequence with a count down timer showing the number of remaining seconds. The message "Off!.." flashes on the LCD display and the display will go blank indicating that the monitor is turned off.

Data protection during power off

When the monitor is turned off, all the current real time data including last measured value are erased. However, the datalog data is preserved in non-volatile memory. Even if the battery is disconnected, the datalog data will not be lost. While the power is off, the real time clock will continue to operate until the battery is completely drained (usually in 4-5 days without any charging). If the battery is completely drained or is disconnected from the monitor for more than 30 minutes, the real time clock will be lost. In this case, the user needs to enter the real time clock information again, as described in Section 4, or send the PC clock during configuration through the PC communication.

2.4 Operation

The **MiniRAE 2000** VOC monitor has two operation modes: **Survey** and **Hygiene** mode. The **Survey mode** allows the user to manually start and stop the monitoring/measuring operation and display certain exposure values. In the **Hygiene mode,** the monitor runs continuously after the monitor is turned on. Refer to Section 4.7.1 for switching between the two modes.

2.4.1 Survey Mode

After the monitor is turned on, it runs through the start up menu. Then the message "**Ready...**" is displayed (see figure below).

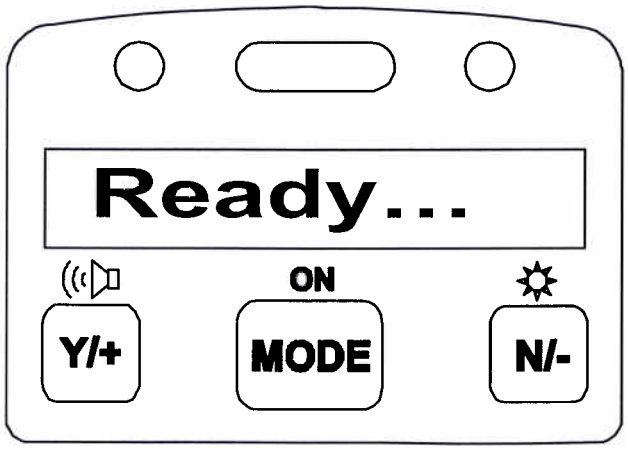

At this point, the user has two options:

1. Step through the Main Menu.
2. Take a measurement.

Press the **[MODE]** button to step through the Main Menu. Press the **[Y/+]** button to proceed to take a measurement.

The Main Menu

Press the **[MODE]** button to enter the Main Menu. Press the **[Y/+], [MODE]** or **[N/-]** as indicated in the flow chart below to step through the Main Menu. The PID sensor and pump are turned off during this time.

The Main Menu functions are:

- **Ready…**
- **Check**
- **Site ID = xxxx**
- **Gas = xxxx**
- **Warm up**
- **X.x ppm**
- **Stop?**
- **TWA/Avg x.x ppm**
- **STEL x.x ppm**
- **Peak x.x ppm**
- **Run time hh:mm**
- **Bat = X.XV**
- **Mm/dd/yy**
- **hh:mm**
- **T = xxxF [date, time and temperature (°C or °F)]**
- **Log On/Off?**
- **PC Comm?**
- **Survey**

These functions are arranged in a "round robin" order. To select a specific function, press the button as shown below until the desired function appears.

Main Menu

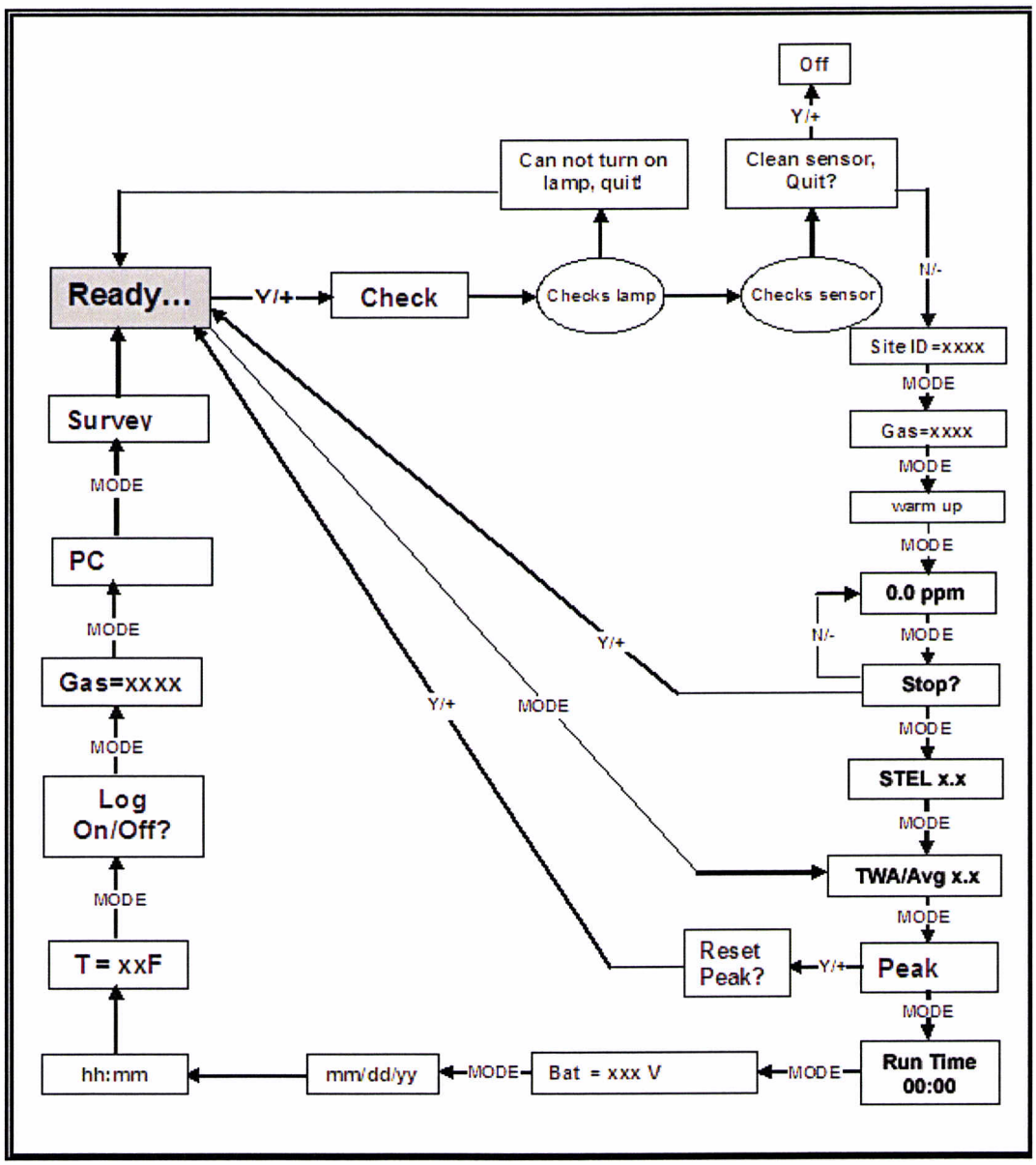

The Main Menu Functions

- **Ready…:** Indicates that the monitor is ready to take a measurement or to step through the Main Menu. Press the **[Y/+]** button to advance to taking a measurement (read "Taking a Measurement" on Page 2-12 for details).

  Note: The **Ready…** screen is skipped if the menu is cycled through while a measurement is running.

- **Check…:** This message displays while the system is checking the lamp and the sensor. If the lamp test succeeds, the system will progress to checking the sensor. If the lamp test does not succeed, the display will read **Can not turn on lamp, quit!**

  - **Can not turn on lamp, quit!:** This message displays when the lamp does not turn on. The system will automatically return to **Ready…** allowing the user to test the lamp again. If the lamp fails a second time, turn the monitor off and refer to Section 7.2 "**PID Sensor & Lamp Cleaning / Replacement**".

  - **Clean Sensor, Quit?:** This message displays when the sensor requires cleaning. Press the **[Y/+]** button to turn the monitor off and clean the sensor. Press the **[N/-]** button and the system will progress to the **Site ID = xx**

- **Site ID = xxxx:** This display shows the Site ID and indicates that the monitor is about to start taking measurements (read "Taking a Measurement" for details)

  Note: This display appears only after a measurement has been started. It does not appear when the user is cyling through the Main Menu and the monitor is idling.

- **Gas = xxxx:** This display identifies the gas to be measured and indicates that the monitor is about to take a measurement (read "Taking a Measurement" for details)

Note: This display appears only after a measurement has been started. It does not appear when the user is cyling through the Main Menu and the monitor is idling.

- **x.x ppm:** (read "Taking a Measurement" for details)

  Note: This display appears only after a measurement has been started. It does not appear when the user is cyling through the Main Menu and the monitor is idling.

- **TWA/Avg:** Displays (in ppm) the Time Weighted Average (TWA) or the Average since the start of the measurement. The average is recalculated every minute.

- **STEL:** Displays the Short Term Exposure Limit.

- **PEAK:** Displays (in ppm) the highest instantaneous reading since the start of the measurement. If **[Y/+]** is pressed while the peak reading is displayed, the unit will ask **Reset Peak?**. If **[Y/+]** is pressed again, the peak value will be cleared and the display will return to the **Ready…** message or instantaneous reading. The peak reading is automatically reset when a new measurement is started by pressing **[Y/+]** from the **Ready…** screen.

- **Run time hh:mm:** The duration of the current measurement period.

- **Bat = X.XV:** The current battery voltage.

  Note: A fully charged battery pack should show 4.8 volts or higher. When the battery voltage falls below 4.4 volts, a flashing **"Bat"** will appear as a warning message. At that point, you have 20-30 minutes of run time remaining. When the battery voltage falls below 4.2 volts the monitor turns off automatically.

- **Mm/dd/yy:** The current date.

- **hh:mm:** The current time (24-hour format)

- **T = xxxF:** The internal unit temperature in degrees Fahrenheit. (see Section 4.7.13 to change temperature units)
- **Log on/Off?:** Allows the user to start datalogging of the current measurement. A superscript "L" flashes in the ppm measurement display when datalogging is on. This screen is not shown when datalogging is disabled or when the monitor is not operating in manual start/stop mode.
- **PC Comm?:** This function enables the user to upload data from the MiniRAE 2000 to a Personal Computer (PC) or send/receive configuration information between a PC and the MiniRAE 2000. Press **[MODE]** to return to **Ready…** .

  To communicate with a PC, connect the monitor to the serial port of a PC and start the MiniRAE 2000 application software. Press the **[Y/+]** button and the LCD displays **"pause monitor, ok?"** Press the **[Y/+]** button one more time, and the display shows **"Comm..."** The monitor is now ready to receive commands from the PC.
- **Survey:** This function displays the Current Operating Mode (**Survey** or **Hygiene**).

Taking a Measurement

There are two ways to start a measurement.

1. Operating in Hygiene mode.
2. Manually start and stop measurement in Survey mode.

To start a measurement in Hygiene mode, please refer to Section 4.7.1, "**Change Operation Mode**". To start a measurement in Survey Mode, the MiniRAE 2000 monitor must first be in the "Ready…" mode. This is the mode to which the monitor normally powers up.

Measurement phases

1. Ready
2. Start measurement
3. Measurement display and datalogging
4. Stop measurement

Ready

The display reads **Ready…** indicating the unit is ready to start a measurement.

Start Measurement

Press the **[Y/+]** button to start the check cycle (see above), and then the measurement cycle.

After completing the **Check** cycle, the display will show the **Site ID** and then the **Gas** selected for measurement. The pump will start and the reading will be displayed. The **Peak** and **Average** values will be automatically reset to zero.

Measurement Display and Datalog

Instantaneous readings of the gas concentration in parts per million (ppm) are updated every second. A flashing superscript **L** is displayed when datalogging is on. Datalog information is saved only after one full datalog period is completed.

Stop Measurement

Press the **[MODE]** button and the display shows Stop? Press **[N/-]** to continue measurement and **[Y/+]** to stop the measurement and datalog event. The pump stops automatically when measurement is stopped. Peak and average values for the current measurement can be read in idle mode until a new measurement is started.

Automatic Increment of Site ID

Every time a measurement is taken, the site ID will be incremented by one automatically in Survey mode.

Variable Alarm Signal

In Survey Mode, if the measurement exceeds the low alarm limit, the buzzer and flashing alarm are activated and will beep/flash once per second. The alarms will increase in frequency as the gas concentration approaches the high alarm limit reaching 8 times per second when the high alarm has been exceeded.

Press **[Y/+]** key to clear if latching alarm.

2.4.2 Hygiene Mode

In Hygiene Mode, the unit will continuously taking measurements, once the power is turned on. After the initial start-up sequence displaying the current monitor settings, the LCD displays the instantaneous readings.

The Hygiene operation menu displays include:

- **Real time readings in ppm**
- **Current TWA/Avg, STEL and Peak values (see Section 4.6.6)**
- **Run time**
- **Current battery voltage**
- **Date, time and temperature**
- **Log on/off?**
- **Gas name**
- **PC communication?**
- **Hygiene**

Detailed description of most of these displays are the same as Section 2.4.1.

HYGIENE MODE MAIN MENU

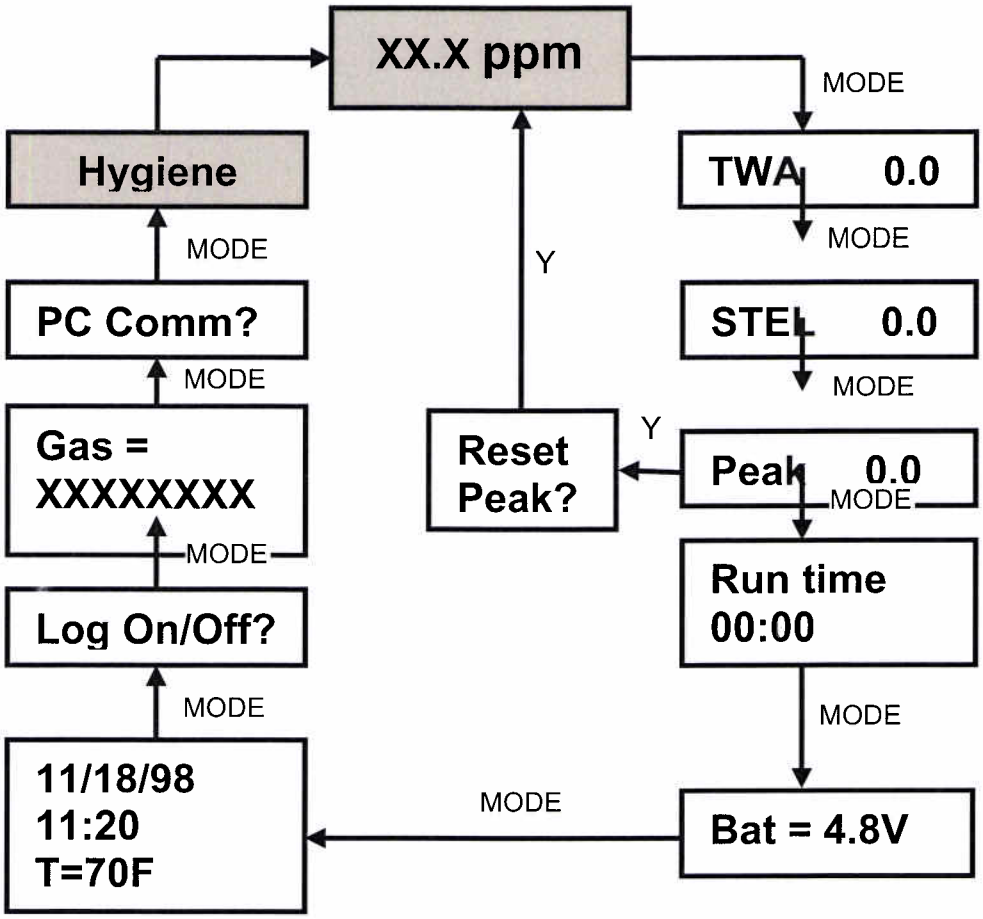

To choose a specific display, press the **[MODE]** key one or more times until the desired display appears, or the **[Y/+]** key where indicated with a Y.

Note: To get back to instantaneous reading from any of the above display, press **[MODE]** key repeatedly until the "XX.X ppm" display appears.

2.5 Alarm Signals

During each measurement period, the gas concentration is compared with the programmed alarm limits (gas concentration alarm limit settings: Low, High, TWA and STEL). If the concentration exceeds any of the preset limits, the loud buzzer and red flashing LED are activated immediately to warn the user of the alarm condition.

In addition, the MiniRAE 2000 will alarm if one of the following conditions occurs: battery voltage falls below a pre-set voltage level (4.4 V), failure of UV lamp, pump stall, or when the datalog memory is full. When the low battery alarm occurs, there will be approximately 20-30 minutes of operating time remaining. When the battery voltage falls below 4.2 V, the monitor will turn off automatically.

Alarm Signal Summary:

Condition	Alarm Signal
Gas exceeds "High Alarm" limit	3 beeps/flashes per second
Gas exceeds "Low Alarm" limit	2 beeps/flashes per second
Gas exceeds "TWA" limit	1 Beeps/flashes per seconds
Gas exceeds "STEL" limit	1 Beeps/flashes per seconds
Pump failure	3 beeps/flashes per second plus "Pump" message on LCD
PID lamp failure	3 beeps/flashes per second plus "Lamp" message on LCD
Low battery	1 flash per second, 1 beep per minute plus "Bat" message on LCD
Memory full	1 flash per second plus "Mem" message on LCD

Alarm Signal Testing:

Under normal non-alarm conditions, it is possible to test the MiniRAE 2000 LED and buzzer in Special Diagnostic Mode (see Section 8 for details).

2.6 Preset Alarm Limits and Calibration

The MiniRAE 2000 portable VOC monitor is factory calibrated with standard calibration gas, and is programmed with default alarm limits. There are 102 gas settings stored in the library. Some examples of calibration and alarm limits are shown below. Refer to Section 4 on programming procedures for selecting a different gas, perform a calibration or set new alarm limits.

Factory Calibration and Preset Alarm Limits

Cal Gas	Cal Span	unit	Low	High	TWA	STEL
Isobutylene	100	ppm	50	100	100	250
Hexane, n-	100	ppm	500	750	500	750
Xylene, m-	100	ppm	100	150	100	150
Benzene	5	ppm	2	5	5	2
Styrene	50	ppm	20	40	20	40
Toluene	100	ppm	50	100	50	100
Vinyl Chloride	10	ppm	5	10	5	10
Custom	100	ppm	50	100	50	100

2.7 Integrated Sampling Pump

The MiniRAE 2000 portable VOC monitor includes an integrated sampling pump. This is a diaphragm type pump that provides a 500-600 cc per minute flow rate. Connecting a Teflon or metal tubing with 1/8 inch inside diameter to the gas inlet port of the MiniRAE 2000, this pump can pull in air samples from 200 feet away horizontally, or 90 feet vertically, at about 3 feet per second flow speed.

The pump turns on when a measurement is started, and turns off when the sample is manually stopped in Survey mode or when the unit is turned off from Hygiene Mode.

If liquid or other objects are pulled into the inlet port filter, the monitor will detect the obstruction and shut down the pump immediately. The alarm will be activated and a flashing error message "Pump" will be also displayed on the LCD display.

The user should acknowledge the pump shut off condition by clearing the obstruction and pressing the **[Y/+]** key to re-start the pump.

The pump stall threshold is set in the special Diagnostic Mode (Section 8).

2.8 Back Light

The LCD display is equipped with an LED back light to assist in reading the display under poor lighting conditions. Pressing and holding the **[N/-]** key for one second in normal operation can turn on the backlight. The backlight can be turned off by pressing **[N/-]** a second time. If the **[N/-]** key is not pressed, the back light will be turned off automatically after a pre-programmed time-out period to save power.

In addition, the ambient light is sensed and the back light will be turned on automatically if the ambient light is below a threshold level. The back light is turned off automatically when the ambient light exceeds the threshold level.

See Section 8 for instructions on how to set the light threshold level.

Note: The LED backlight consumes about 20-30% of the total average current, when the instrument is idle or not taking a measurement.

2.9 Datalogging

During datalogging, the MiniRAE 2000 Portable VOC monitor flashes a superscript "L", on the display to indicate that datalogging is enabled. The monitor stores the time stamp, sample number, and measured gas concentration at the end of every sample period (when data logging is enabled). In addition, the following information are stored: user ID, site ID, serial number, last calibration date, and alarm limits. All data are retained (even after the unit is turned off) in non-volatile memory so that it can be down loaded at a later time to a PC.

Datalogging event

When Datalogging is enabled, measurement readings are being saved. These data are stored in "groups" or "events. A new event is created and stored each time the monitor is turned on, or a configuration parameter is changed, or datalogging is interrupted (e.g. Communication with PC during Hygiene mode). Information, such as start time, user ID, site ID, gas name, serial number, last calibration date, and alarm limits will be recorded.

Datalogging sample

After an event is recorded, the unit records a shorter form of the data. This data contains: the sample number, time (hour/minute) and gas concentration.

3. OPERATION OF ACCESSORIES

The accessories for the MiniRAE 2000 include:

- An AC Adapter (Battery Charger)
- Alkaline battery holder
- Water Trap Filter

Optional Accessories:

- Dilution Fitting
- Calibration adapter
- Calibration regulator and Flow controller
- Organic Vapor Zeroing kit

3.1 Standard Kit and Accessories

1) AC Adapter (Battery Charger)

WARNING

To reduce the risk of ignition of hazardous atmospheres, recharge battery only in area known to be non-hazardous. Remove and replace battery only in area known to be non-hazardous.

Ne charger les batteries que dans emplacements designés non-dangereuses.

A battery charging circuit is built into the MiniRAE 2000 monitor. It only needs a regular AC to 12 V DC adapter (wall mount transformer) to charge the monitor.

To charge the battery inside the MiniRAE 2000 monitor:

1. Power off the Monitor.
2. Connect the AC adapter (or the optional automotive charging adapter) to the DC jack on the MiniRAE 2000 monitor. If the unit was off, it will automatically turn on.
3. The first message displayed will be "Deep discharge?" The unit will ask this question for three times. If the user wants to discharge the battery pack, affirm this query with the **[Y/+]** key, otherwise the unit will move on to the charge mode directly.

4. While charging, the display message will alternate between "Charging" and "Bat=x.xV" (x.x is the present battery voltage). The LED should be red in color when charging.

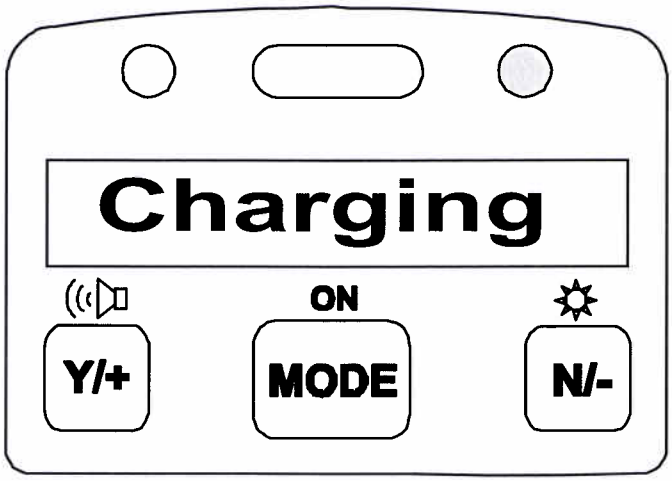

5. When the battery is fully charged, the LED will change from red to green and the message "Fully charged" will appear on the display. After the battery is fully charged, the unit will enter the "trickle charge" mode. In which, the red LED will turn on for several seconds every minute, to maintain the full charge.

A completely discharged MiniRAE 2000 monitor will be charged to full capacity within 10 hours. The battery will be drained slowly even if the monitor is turned off. If the monitor has not been charged for 7-10 days, the battery voltage will be low.

The factory-supplied battery is designed to last for 10 hours of normal operation (no alarm, no back light condition), for a new battery under the best condition. As the battery becomes older or is subject to adverse conditions (such as cold ambient temperature), the battery capacity will be reduced significantly.

2) Alkaline Battery Holder

An alkaline battery holder is supplied with each MiniRAE 2000. It accepts four AA size alkaline batteries and can be used in place of the Ni-MH or Ni-Cd battery pack to provide approximately 12-14 hours of operation. The adapter is intended to be used in emergency situations when there is no time to charge the Ni-Cd or Ni-MH battery pack.

To install the adapter, remove the cover of the battery compartment. Remove the Ni-Cd or Ni-MH battery pack from the battery compartment and replace with the alkaline battery adapter. Replace the battery compartment cover.

The internal charging circuit is designed to prevent damage to alkaline batteries and the charging circuit when alkaline batteries are installed inside the monitor.

***Note*:** The AA Alkaline battery adapter supplied by RAE Systems Inc. is intrinsically safe!

3) Water Trap Filter

The water trap filter is made of PTFE (Teflon®) membrane with a 0.45 micron pore size to prevent water from being sucked into the sensor manifold, which would cause extensive damage to the monitor. It will also remove any dust and other particles from entering the monitor and prolong the operating life of the sensor. To install the water trap, simply insert it to the front of the inlet tube of the MiniRAE 2000 monitor.

3.2 Optional Accessories

1) Dilution Fitting

The user may wish to install a dilution fitting on the inlet to dilute the gas samples. One application for a dilution fitting is to measure organic gas when the concentration exceeds the upper limit of the sensor range.

Make sure to set the dilution ratio in the programming mode (see Section 4.7.9) so that the correct gas reading will be displayed when the dilution fitting is used.

WARNING: To use a dilution fitting, the user must have the monitor located in a clean atmosphere outside the confined space and use a remote access probe or Tygon tubing to measure the gas concentration inside the confined space.

2) Calibration Adapter

The calibration adapter for the MiniRAE 2000 is a simple 6-inch Tygon tubing with a metal adapter on one end. During calibration, simply insert the metal adapter into the regular gas inlet probe of the MiniRAE 2000 and the tubing to the gas regulator on the gas bottle.

3) Calibration Regulator and Flow Controller

The Calibration Regulator and Flow controller is used in the calibration process. It regulates the gas flow rate from the Span gas cylinder into the gas inlet of the MiniRAE 2000 monitor during calibration process. The maximum flow rate allowed by the flow controller is about 0.5L/min (500 cc per min.). Alternatively, a Demand-flow Regulator or a Tedlar gas bag may be used to match the pump flow precisely.

4) Organic Vapor Zeroing kit (Charcoal filter)

The Organic Vapor Zeroing Kit is used for filtering organic air contaminants that may affect the zero calibration reading. To use the Organic Vapor Zeroing Kit, simply connect the filter to the inlet port of the MiniRAE 2000.

4. PROGRAMMING OF MINIRAE 2000

The MiniRAE 2000 Monitor is built with a microcomputer to provide programming flexibility. Authorized users can re-calibrate the monitor, change the alarm limits, change site ID, user ID, lamp type, and real time clock, etc.

Programming is menu-driven to provide intuitive end-user operation. The display shows the menu options and the key pad used for menu selection and data entry.

4.1 Programming Mode

The programming mode allows the users to change the setups in the monitor, calibrate the monitor, modify the sensor configuration and enter user information, etc. The programming mode has four menu items. Each menu item includes several sub-menus to perform additional programming functions. Appendix A shows a more detailed menu tree structure.

Programming Menu

Calibrate/Select Gas?

Change Alarm Limits?

Change Datalog?

Change Monitor Setup?

Once inside the programming mode, the LCD will display the first menu. Each subsequent menu item can be viewed by pressing the **[N/-]** repeatedly until the desired menu is displayed. To enter the sub-menu of a particular menu, press **[Y/+]** key, the sub-menu will be displayed.

Return to Operation mode: To exit the programming mode and return to operation, press the **[MODE]** key once at any of the programming menu displays.

4.2 Keys for Programming Mode

The three keys perform a different set of functions during the programming mode as summarized below.

Key	Function in Programming Mode
[MODE]:	Exit menu when pressed momentarily or exit data entry mode when pressed and held for 1 second
[Y/+]:	Increase alphanumerical value for data entry or confirm (yes) for a question
[N/-]:	Decrease alphanumerical value for data entry or deny (no) for a question

4.3 Entering into Programming Mode

1. Turn on the MiniRAE 2000 monitor and wait for the **"Ready.."** message or the instantaneous reading display **"0.0 ppm"** message displayed.
2. Press and hold down both **[N/-]** and **[MODE]** keys for three seconds to enter programming mode. This delay is to prevent the user from entering programming mode by accident.
3. The first menu item "Calibrate/select Gas?" will be displayed.
4. Release both **[MODE]** and **[N/-]** keys simultaneously to start the programming mode
5. Press **[N/-]** key to scroll to the next menu item of the programming menu. Press **[Y/+]** key to select the displayed menu item.

The following Sections 4.4 - 4.7 describe the details of each menu options.

4.4 Calibrate and Select Gas

WARNINGS

The calibration of all newly purchased RAE Systems instruments should be tested by exposing the sensor(s) to known concentration calibration gas before the instrument is put into service for the first time.

For maximum safety, the accuracy of the MiniRAE 2000 should be checked by exposing it to known concentration calibration gas before each day's use.

In the first menu of the programming mode, the user can perform functions such as calibration of the MiniRAE 2000 Monitor, select default cal memories, and modify cal memories (see Table 4.4).

Table 4.4

Calibrate/Select Gas Sub-Menu
Fresh Air Cal?
Span Cal?
Select Cal Memory?
Change Span Value?
Modify Cal Memory?
Change Correction Factor?

Calibrating the MiniRAE 2000 monitor is a two-point process using "fresh air " and the standard reference gas (also known as span gas). First a "Fresh air" calibration, which contains no detectable VOC (0.0 ppm), is used to set the zero point for the sensor. Then a standard reference gas that contains a known concentration of a given gas is used to set the second point of reference.

Note: The span value must be set prior to calibrating for fresh air or span.

The user can store calibrations for up to 8 different measurement gases. The default gas selections are as follows:

Cal Memory #0.....Isobutylene

Cal Memory #1.....Hexane

Cal Memory #2.....Xylene

Cal Memory #3.....Benzene

Cal Memory #4.....Styrene

Cal Memory #5.....Toluene

Cal Memory #6.....Vinyl Chloride

Cal Memory #7.....Custom?

Memory #0 functions differently than the other 7 memories. For Memory #0, isobutylene is always the calibration gas. When the gas is changed in Memory #0 to one of 100 other preprogrammed chemicals or to a user-defined custom gas, a correction factor is applied to all the readings. During calibration, the unit requests isobutylene gas and displays the isobutylene concentration immediately following calibration, but when the unit is returned to the normal reading mode, it displays the selected gas and applies the correction factor.

The other 7 cal memories require the same calibration gas as the measurement gas. These memories may also be modified to a preprogrammed chemical or to a user-defined custom gas. In the gas library, only the gases that can be detected by the installed UV lamp will actually be displayed. Note that although the correction factor for the new gas will be displayed and can be modified, this factor is not applied when Memories #1-7 are

used. Therefore the factor will not affect the readings in these memories.

Once each of the memories has been calibrated, the user can switch between the calibrated gases by changing the cal memory without the need to recalibrate. Or the user can switch the measurement gas in Memory #0 and the appropriate correction factor will automatically be applied without the need to recalibrate. If the gas is changed in Memories #1-7, it is necessary to recalibrate.

To change a default gas from the list above to a library or custom gas, first go to Select Cal Memory (Section 4.4.3) and then proceed to Modify Cal Memory (Section 4.4.5) to enter the desired gas. If the desired compound does not appear in the preprogrammed library, the user can use the Custom_VOC entry in the library, or the name and correction factor of any of the existing compounds can be changed as described in Section 4.4.5. A list of some 300 correction factors is given in Technical Note 106, available at the website www.raesystems.com.

4.4.1 Fresh Air Calibration

This procedure determines the zero point of the sensor calibration curve. To perform a fresh air calibration, use the calibration adapter to connect the MiniRAE 2000 to a "fresh" air source such as from a cylinder or Tedlar bag (option accessory). The "fresh" air is clean dry air without any organic impurities. If such an air cylinder is not available, any clean ambient air without detectable contaminant or a charcoal filter can be used.

1. The first sub-menu shows: "Fresh air Cal?"
2. Make sure that the MiniRAE 2000 is connected to one of the "fresh" air sources described above.
3. Press the **[Y/+]** key, the display shows "zero in progress" followed by "wait.." and a countdown timer.

After about 15 seconds pause, the display will show the message "update data…zeroed… reading = X.X ppm…" Press any key or wait about 20 seconds, the monitor will return back to "Fresh air Calibration?" submenu.

4.4.2 Span Calibration

This procedure determines the second point of the sensor calibration curve for the sensor. A cylinder of standard reference gas (span gas) fitted with a 500 cc/min. flow-limiting regulator or a flow-matching regulator is the simplest way to perform this procedure. Choose the 500 cc/min. regulator only if the flow rate matches or slightly exceeds the flow rate of the instrument pump. Alternatively, the span gas can first be filled into a Tedlar Bag, or delivered through a demand-flow regulator. Connect the calibration adapter to the inlet port of the MiniRAE 2000 Monitor, and connect the tubing to the regulator or Tedlar bag.

Another alternative is to use a regulator with >500 cc/min flow but allow the excess flow to escape through a T or an open tube. In the latter method, the span gas flows out through an open tube slightly wider than the probe, and the probe is inserted into the calibration tube.

Before executing a span calibration, make sure the span value has been set correctly (see next sub-menu).

1. Make sure the monitor is connected to one of the span gas sources described above.
2. Press the **[Y/+]** key at the "Span Cal?" to start the calibration. The display shows the gas name and the span value of the corresponding gas.
3. The display shows "Apply gas now!" Turn on the valve of the span gas supply.

4. Display shows "wait.... 30" with a count down timer showing the number of remaining seconds while the monitor performs the calibration.

5. To abort the calibration, press any key during the count down. The display shows "Aborted!" and return to "Span Cal?" sub-menu.

6. When the count down timer reaches 0, the display shows the calibrated value.

   Note: The reading should be very close to the span gas value.

7. During calibration, the monitor waits for an increased signal before starting the countdown timer. If a minimal response is not obtained after 35 seconds, the monitor displays "No Gas!" Check the span gas valve is on and for lamp or sensor failure before trying again.

8. The calibration can be started manually by pressing any key while the "Apply gas now!" is displayed.

9. After a span calibration is completed, the display will show the message "Update Data Span Cal Done! Turn Off Gas."

10. Turn off the flow of gas. Disconnect the calibration adapter or Tedlar bag from the MiniRAE 2000 Monitor.

11. Press any key and it returns back to "Span Gas Cal?"

4.4.3 Select Cal Memory

This function allows the user to select one of eight different memories for gas calibration and measurement. For Memories #1-7, the calibration and measurement gas is the same and no correction factor is applied. For Memory #0, the calibration gas is always isobutylene and the measurement gas may be different, in which case the correction factor for that gas is automatically applied. The default gas selections are listed in Section 4.4

1. "Select Cal Memory?" is the third sub-menu item in the Calibration sub-menu. Pressing the **[Y/+]** key, the display will show "Gas =" gas name followed by "Mem # x?"
2. Press **[N/-]** to scroll through all the memory numbers and the gas selections respectively. Press **[Y/+]** to accept the displayed Cal Memory number.
3. After the **[Y/+]** key is pressed, the display shows "Save?" Press **[Y/+]** key to save and proceed. Press **[N/-]** to discard the entry and advance to the next sub-menu.
4. If the gas in a newly selected Cal Memory number is not calibrated, the display shows "CF= x.xx". A correction factor with the value "x.xx" will be applied.
5. If the gas of a newly selected cal memory number has been calibrated previously, the display shows "Last calibrated xx/xx/xx".

4.4.4 Change Span Value

This function allows the user to change the span values of the calibration gases.

1. "Change Span Value?" is the fourth sub-menu item in the Calibration sub-menu
2. Press **[Y/+]**, display shows the gas name and the span value. A cursor will blink at the first digit of the Span value. To modify the span gas value, go to Step 3. Otherwise, press and hold the **[MODE]** key for 1 second to accept the previously stored span gas value and move to the next sub-menu.
3. Starting from the left-most digit of the span gas value, use the **[Y/+]** or **[N/-]** key to change the digit value and press **[MODE]** key momentarily to advance to next digit. Repeat this process until all digits are entered. Press and hold the **[MODE]** for 1 second to exit.
4. The display shows "Save?" To accept the new value, press the **[Y/+]** key. Press the **[N/-]** key or the **[MODE]** key to discard the change and move to the next sub-menu.

4.4.5 Modify Cal Memory

If the current cal memory number selected is not memory 0, users will be prompted whether to modify the settings of the selected cal memory. Press **[Y/+]** to modify the cal memory and **[N/-]** to go to the next sub-menu.

Once **[Y/+]** is pressed the LCD display will show the current memory number, current Gas selected and prompt user for acceptance of current gas selected.

1. Press **[N/-]** to modify the gas selection if desired. Or press **[Y/+]** key to skip the change of gas selection, and proceed to the next sub-menu.
2. After pressing **[N/-]**, display shows "Copy gas from library?" Press **[Y/+]** to accept or **[N/-]** for the next sub-menu, "Enter Custom gas?"
3. In the "Copy gas from library" submenu, use **[Y/+]** and **[N/-]** keys to scroll through the selections in the library. Press **[MODE]** key momentarily to select the gas. The display shows "Save?" Press **[Y/+]** to save or **[N/-]** to discard the changes and proceed to next sub-menu.
4. In the Custom gas sub-menu, the user can enter the gas name. Press the **[Y/+]** or **[N/-]** key to cycle through all 26 letters and 10 numerals. Press the **[MODE]** key momentarily to advance to the next digit. The flashing digit will move to the next digit to the right. Repeat this process until all digits (up to 8 digits) of the custom gas name is entered.

Press and hold the **[MODE]** key for 1 second to exit the name entry mode. The display will show "Save?" Press **[Y/+]** to save the entry, or **[N/-]** to discard the changes.

4.4.6 Change Correction Factor

This function allows the user to change the Correction Factor of the standard calibration gas (only for Cal Memory #0).

1. "Change Correction Factor?" is the sixth sub-menu in the Calibration sub-menu.
2. Press **[Y/+]** key. Display shows the gas name, then the correction factor.

   A cursor blinks at the left-most digit of the correction factor. If user wants to modify the correction factor, go to Step 3. Otherwise, press and hold the **[MODE]** key for 1 second to accept the previously stored correction factor value and return to the first sub-menu of the calibrate/select gas menu.
3. Starting from the left-most digit of the correction factor, use **[Y/+]** or **[N/-]** key to change the digit value and press **[MODE]** key momentarily to advance to the next digit, the cursor will move to the next digit to the right. Repeat this process until all digits are entered. Press and hold the **[MODE]** for 1 second to exit.
4. The display shows "Save?" To confirm the new value, press **[Y/+]** to accept the change. Press **[N/-]** or **[MODE]** to discard the change and return to the first sub-menu, Calibrate and Select Gas.

4.5 Change Alarm Limits

In this menu, the user can change the high and low alarm limits, the STEL limit and the TWA limit (see Table 4.5 below). Press the **[Y/+]** key and the display shows the current gas selected followed by the first sub-menu item below.

Table 4.5

Alarm Limit Sub-Menu
Change High Alarm limit?
Change Low Alarm limit?
Change STEL limit?
Change TWA limit?

1. Scroll through the Alarm Limit sub-menu using the **[N/-]** key until the display shows the desired limit to be changed, e.g.,"High limit?", "STEL limit?", etc.

2. Press the **[Y/+]** key to select the desired limit and the display shows a flashing cursor on the left-most digit of the previously stored alarm limit.

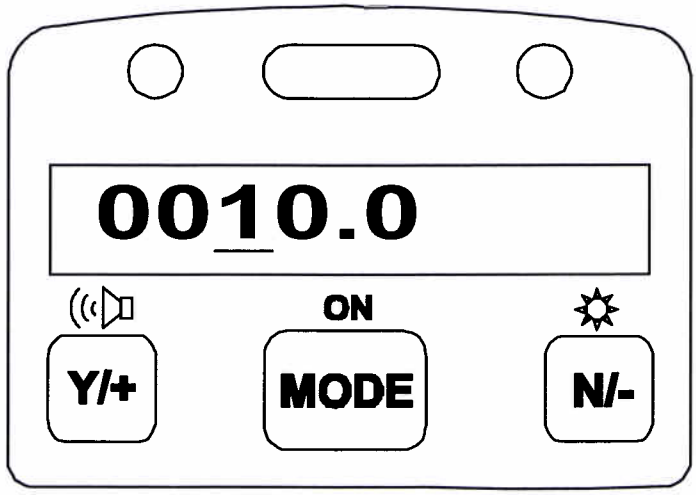

3. To modify this limit value, use the **[Y/+]** or **[N/-]** key to change the digit value and press the **[MODE]** key momentarily to advance to the next digit. The flashing digit will move to the next digit to its right. Repeat this process until the new limit value is entered. Press and hold the **[MODE]** key for 1 second to exit data entry mode.

4. If there is any change to the existing value, the display shows "Save?" Press **[Y/+]** to accept the new value and move to the next sub-menu. Press **[N/-]** to discard the changes and move to the next sub-menu.

4.5.1 Change Low Alarm Limit

The second sub-menu item in the Alarm Limit sub-menu allows the user to change the Low Alarm limit. The LCD displays "Low limit?" To change Low Alarm limit, press **[Y/+]** key, or Press **[N/-]** key advance to next sub-menu in Table 4.5.

1. Press **[Y/+]** and the display will show a flashing cursor on the left-most digit of the previously stored Low alarm limit.
2. To modify this limit value, use the **[Y/+]** or **[N/-]** key to change the digit value and press the **[MODE]** key momentarily to advance to the next digit. The flashing digit will move to the next digit to its right. Repeat this process until the new limit values is entered. Press and hold the **[MODE]** key for 1 second to exit data entry mode.
3. If there is any change to the existing value, the display shows "Save?" Press **[Y/+]** to accept the new value and move to the next sub-menu. Press **[N/-]** to discard the changes and move to the next sub-menu.

4.5.2 Change STEL Limit

This sub-menu item allows the user to change the STEL limit. The display shows "STEL limit?"

1. Press the **[Y/+]** key and the display will show a flashing cursor on the left-most digit of the previously stored STEL limit.
2. To modify this limit value, use the **[Y/+]** or **[N/-]** key to change the digit value and press the **[MODE]** key momentarily to advance to the next digit. The flashing digit will move on to next digit to its right. Repeat this process until the new limit values is entered. Press and hold the **[MODE]** key for 1 second to exit data entry mode.
3. If there is any change to the existing value, the display shows "Save?" Press **[Y/+]** to accept the new value and move to the next sub-menu. Press **[N/-]** to discard the changes and move to the next sub-menu.

4.5.3 Change TWA Limit

This sub-menu item allows the user to change the TWA limit. The LCD displays "TWA limit?"

1. Press **[Y/+]** and the display will show a flashing cursor on the left-most digit of the previously stored TWA limit.
2. To modify this limit value, use the **[Y/+]** or **[N/-]** key to change the digit value and press the **[MODE]** key momentarily to advance to the next digit. The flashing digit will move on to next digit to its right. Repeat this process until the new limit values is entered. Press and hold the **[MODE]** key for 1 second to exit data entry mode.
3. If there is any change to the existing value, the display shows "Save?" Press **[Y/+]** to accept the new value and move to the next sub-menu. Press **[N/-]** to discard the changes and move to the next sub-menu.

4.6 Change Datalog

The MiniRAE 2000 monitor calculates and stores the concentration and ID of each sample taken. In the datalog sub-menu, a user can perform the tasks and functions shown below.

Datalog Sub-Menu

Reset Peak/Minimum?

Clear Data?

Change Data Period?

Change Average Type?

4.6.1 Reset Peak

This function will reset the peak and minimum stored in the data memory. Note: this function will not clear the STEL or TWA data.

1. "Reset Peak?" is the first sub-menu item in the Datalog sub-menu (Table 4.6).
2. Press the **[Y/+]** key to reset the Peak/Minimum Values. The display shows "Are You Sure?"
3. Pressing the **[Y/+]** key again will reset the values. The display shows "Peak/Minimum Cleared" and moves to the next submenu.
4. Press the **[N/-]** or **[MODE]** key to exit without resetting the values and move to the next sub-menu.

4.6.2 Clear Data

This function will erase all data stored in the non-volatile datalog memory. Note: This function does not change STEL, TWA, Peak, Minimum and run time values, which are stored in the regular data memory.

1. "Clear Data?" is the third sub-menu item in the Datalog sub-menu.
2. Press the **[Y/+]** key to clear the datalog memory. The display shows "Are you sure?"
3. Press the **[Y/+]** key again to confirm erasure of all the datalog memory.
4. Press the **[N/-]** or **[MODE]** key to exit without clearing the datalog memory and move to the next datalog sub-menu.

4.6.3 Change Data Period

The datalog period can be programmed from 1 to 3,600 seconds (1 hour).

1. "Change Data Period?" is the fifth sub-menu item in the Datalog sub-menu.
2. Press the **[Y/+]** key and the display shows "Datalog Period = XXXX" with the left-most digit flashing, where "XXXX" is the previously stored data log period.
4. To modify this period, starting from the left-most digit, use the **[Y/+]** or **[N/-]** key to change the digit value and press the **[MODE]** key momentarily to advance to the next digit. The flashing digit will move to the next digit to the right. Repeat this process until all 4 digits of the new period are entered. Press and hold the **[MODE]** key for 1 second to exit data entry mode.
5. If there is any change to the existing value, the display will show "Save?" Press **[Y/+]** to accept the new value or **[N/-]** to discard the changes and move to the next sub-menu.

4.6.4 Change Average Type

The user can select either an 8-hour Time Weighted Average (TWA) or a running Average. The running average is simply the average of all instantaneous (1-second) readings since the measurement was started. This average may increase or decrease with time depending on the readings. The TWA is a cumulative value used to estimate the fraction of the 8-hour limit to which the user has been exposed since the start of the measurement. This value can only increase or remain constant, never decrease. Refer to Technical Note 119 for more information on how TWA is calculated.

1. "Change Average Type?" is the sixth sub-menu in the Datalog sub-menu.
2. Press the **[Y/+]** key to enter the function.
3. The display will show "Running Average?" or " Time Weighted Average?" depending on the current average type.
4. Press **[N/-]** key to toggle between the average types. Press **[Y/+]** key to select the displayed average type.
5. If there is any change to the existing setting, the display shows "Save?" Press **[Y/+]** to save the change. Press **[N/-]** or **[MODE]** to discard the change and return to the first sub-menu.

4.7 Change Monitor Setup

Several monitor specific variables can be changed in this menu. The following is a list of configuration data that can be modified by the user.

Monitor Setup Sub-Menu	Diagnostic Mode
Change Operation Mode?	"
Change Site ID?	Change Unit ID?
Change User ID?	Change Host ID?
Change Alarm Mode?	"
Change User Mode?	"
Change Date?	"
Change Time?	"
Change Lamp?	"
Change Pump Duty Cycle?	"
Change Unit?	"
Change Dilution Ratio?	"
Change Output?	"
Change DAC Range?	"
Set Temperature Unit?	"

4.7.1 Change Operation Mode

MiniRAE 2000 supports two operation modes: Survey and Hygiene mode.

Survey mode: Manual start/stop of measurements and display of certain exposure values.

Hygiene mode: Automatic measurements, running and datalogging continuously and calculates additional exposure values.

1. "Change Op Mode?" is the first sub-menu item in the Monitor Setup menu (Table 4.7).
2. Press the **[Y/+]** key and the display shows the current user mode: "Op Mode = *current mode*?"
3. Press the **[Y/+]** key to accept the currently displayed operation (Op) mode. Press **[N/-]** to toggle to the other operation mode. Press **[MODE]** to exit this sub-menu and move to the next monitor setup sub-menu.
4. When changing Op mode from Hygiene to Survey, the display shows the additional message "Warning! Exit Hygiene?" to prevent accidental exit from Hygiene mode. Press the **[Y/+]** key to acknowledge.
5. If there is any change to the existing setting, the display will show "Save?" Press the **[Y/+]** key to accept or the **[N/-]** key to discard and move to the next sub-menu.

Note: If a new Op Mode is saved, the display shows "Op Mode changed!!" when exiting the programming mode.

4.7.2 Change Site ID

The user can enter an 8-digit alphanumeric site ID in the programming mode. This site ID will be included in the datalog report.

1. "Change Site ID?" is the second sub-menu item in the Monitor Setup menu (Table 4.7).
2. Press the **[Y/+]** key and the display shows the current site ID: "Site ID = xxxxxxx" with the left most digit flashing.
3. Press the **[Y/+]** or **[N/-]** key to cycle through all 26 letters and 10 numerals. Press **[MODE]** momentarily to advance to the next digit. The flashing digit will move to the next digit to the right. Repeat this process until all 8 digits of the new site ID are entered.
4. Press and hold the **[MODE]** key for 1 second to exit the data entry mode.
5. If there is any change to the existing site ID, the display shows "Save?" Press the **[Y/+]** key to accept the new site ID. Press the **[N/-]** key to discard the change and move to the next sub-menu.

4.7.3 Change User ID

The user can enter an 8-digit alphanumeric user ID in the programming mode. This user ID will be included in the datalog report.

1. "Change User ID?" is the third sub-menu item the Monitor Setup menu.
2. Press the **[Y/+]** key and the display shows the current user ID: "User ID = xxxxxxxx" with the left most digit flashing.
3. Press the **[Y/+]** or **[N/-]** key to cycle through all 26 letters and 10 numerals. Press **[MODE]** momentarily to advance to the next digit. The flashing digit will move to the next digit to the right. Repeat this process until all 8 digits of the new user ID are entered.
4. Press and hold the **[MODE]** key for 1 second to exit the data entry mode.
5. If there is any change to the existing user ID, the display shows "Save?" Press the **[Y/+]** key to accept the new user ID. Or press the **[N/-]** key to discard the changes and move to the next sub-menu.

4.7.4 Change Alarm Mode?

There are two different alarm modes: **Latched** and **Automatic Reset** (Auto Reset) in the MiniRAE 2000 that can be selected from the programming menu.

1. "Change Alarm Mode?" is the fourth sub-menu item in the Monitor Setup menu.
2. Press the **[Y/+]** key; the display shows the current alarm mode.
3. Press the **[Y/+]** key to accept the currently displayed alarm mode. Press **[N/-]** key to toggle to the other alarm mode. Press **[MODE]** to exit this sub-menu and move to the next monitor setup sub-menu.
4. If there is any change to the existing setting, the display will show "Save?" Press **[Y/+]** to save the change. Press **[N/-]** or **[MODE]** to discard the change and move to the next sub-menu.

4.7.5 Change User Mode

There are two different user modes: **Display** and **Program** that can be selected from the programming menu.

1. "Change User Mode?" is the fifth sub-menu item in the Monitor Setup menu (Table 4.7).
2. Press the **[Y/+]** key; the display shows the current user mode selected.
3. Press the **[Y/+]** key to accept the currently displayed user mode. Press **[N/-]** key to toggle to the alternate user modes. Press **[MODE]** to exit this sub-menu and move to the next monitor setup sub-menu.
4. If there is any change to the existing selection, the display shows messages "Program change" and "Are you sure?" Press **[Y/+]** to confirm the change or press **[N/-]** or **[MODE]** to discard the changes and move to the next sub-menu.

CAUTION: If the user mode is changed to **Display** mode, the user can no longer enter the programming mode. Therefore, the user can not change the user mode back to **Program** mode in normal mode.

To restore the user mode back to **Program** mode, turn the unit off and back on in Diagnostic Mode. Next enter Program mode by holding the **[MODE] and [N/-]** keys for three seconds. Enter the password at the prompt (the default is 0000). Once program mode is entered, go to the "Change Monitor Setup" / "Change User Mode" and change the mode back to **Program.**

An alternative way to change Display mode back to Program mode is through the PC and the ProRAE-Suite software.

4.7.6 Change Date

The MiniRAE 2000 monitor is equipped with a real time clock (RTC). The user can enter the correct date and time (see 4.7.7) for the real time clock.

1. "Change Date?" is the sixth sub-menu item in the Monitor Setup menu.
2. Press **[Y/+]** and the display shows the current date "mm / dd / yy" with the left most digit of the date flashing.
5. To modify this value, use the **[Y/+]** or **[N/-]** key to change the digit value and press the **[MODE]** key momentarily to advance to the next digit. The flashing digit will move on to next digit to its right. Repeat this process until the new date and time values are entered. Press and hold the **[MODE]** key for 1 second to exit data entry mode.
4. If there is any change to the existing value, the display shows "Save?" Press **[Y/+]** to confirm the new value or press **[N/-]** or **[MODE]** to discard the changes and move to the next sub-menu.

4.7.7 Change Time

To change the time in the RTC of the MiniRAE 2000:

1. "Change Time?" is the seventh sub-menu item in the Monitor Setup menu.
2. Press **[Y/+]** and the display shows the current time in the 24-hour format "hh : mm" with the left most digit of the time flashing.
3. To modify this value, use the **[Y/+]** or **[N/-]** key to change the digit value and press the **[MODE]** key momentarily to advance to the next digit. The flashing digit will move on to next digit to its right. Repeat this process until the new date and time values are entered. Press and hold the **[MODE]** key for 1 second to exit data entry mode.
4. If there is any change to the existing value, the display shows "Save?" Press **[Y/+]** to confirm the new value or press **[N/-]** or **[MODE]** to discard the changes and move to the next sub-menu.

4.7.8 Change Lamp

There are three UV lamps with different photon energies available for the PID sensor: **9.8 eV, 10.6 eV** and **11.7 eV**. The user can select any one of the lamps from the programming mode.

1. "Change Lamp Type?" is the eighth sub-menu item in the Monitor Setup menu (Table 4.7).
2. Press the **[Y/+]** key; the display shows the current PID lamp selection.
3. Press the **[Y/+]** key to accept the currently displayed lamp. Press **[N/-]** key to scroll through the sub-menu for other lamp selections. Press **[MODE]** to exit this sub-menu and return to the next sub-menu in Table 4.7.
4. If there is any change to the existing selection, the display will show "Save?" Press **[Y/+]** to save the new selection or press **[N/-]** or **[MODE]** to discard the change and return to the next sub-menu in Table 4.7.

4.7.9 Change Unit

User can change the display and datalog unit from parts per million (ppm) to milli-gram per cubic meter (mg/m^3).

1. "Change Unit?" is the ninth sub-menu item in the Monitor Setup sub-menu.
2. Press the **[Y/+]** key, the display should show the current unit "Display Unit = ppm?" or "Display Unit = mg?"
3. Press **[Y/+]** key to accept the currently displayed unit. Press **[N/-]** key to toggle to the other unit. Press **[MODE]** key to exit this sub-menu.
4. If there is any change to the existing selection, press **[Y/+]** to confirm the new selection or press **[N/-]** or **[MODE]** to discard the changes and move to the next sub-menu.

Caution:

1. **The correction factor in the gas library is calculated based on "ppm" unit. If "mg" unit is selected, the built-in correction factor library is not valid.**
2. **No automatic conversion between "ppm" and "mg/m^3" reading is performed by the monitor.**
3. **When the unit name is changed from "ppm" to "mg", the unit must be recalibrated with the span gas concentration entered in mg/m^3. The converse rule applies when the unit is changed from "mg" to "ppm".**

4.7.10 Change Dilution Ratio

If a dilution system is used upstream of the MiniRAE 2000 inlet port, the user can enter the dilution ratio (from 1 to 10) to compensate the readings. The unit will then display the actual concentration of the gas before dilution. The dilution ratio should be 1 in normal operation where no dilution gas is applied to the sample gas. Dilution improves accuracy and linearity when the concentrations are above a few thousand ppm.

1. "Change Dilution Ratio?" is the tenth sub-menu item in the Monitor Setup menu.
2. Press the **[Y/+]** key; the display shows the current dilution ratio: "Dilution Ratio = xx" with the left most digit flashing.
3. Press the **[Y/+]** or **[N/-]** key to increase or decrease the value of the digit. Press **[MODE]** momentarily to advance to the next digit. The flashing digit will move to the next digit to the right. Repeat this process until both digits of the new dilution ratio are entered.
4. Press and hold the **[MODE]** key for 1 second to exit the data entry mode and move to the next sub-menu.
5. If there is any change to the existing dilution ratio, the display shows "Save?" Press **[Y/+]** to confirm the new value or press **[N/-]** or **[MODE]** to discard the changes and move to the next sub-menu.

4.7.11 Change Output?

There are two different external output options: DAC (Analog output) and Alarm in the MiniRAE 2000 that can be selected from the programming menu. The alarm output can be used to connect to the optional vibration alarm (vibrator) only. The analog output, which is proportional to the gas concentration, can be connected a chart recorder or can be queried by a computer to download data in real time (see Technical Note 141).

1. "Change External Output?" is the eleventh sub-menu item in the Monitor Setup menu.
2. Press the **[Y/+]** key and the display shows the current output option selection: "Output = DAC?"
3. Press the **[Y/+]** key to accept the currently displayed output option. Press **[N/-]** to change to the other external option: "Output = Alarm?" Press **[MODE]** to exit this sub-menu and move to the next monitor setup sub-menu.
4. If there is any change to the existing selection the display will show "Save?" Then, press **[Y/+]** to save the change, press **[N/-]** to go back to Step 2, or press **[MODE]** to exit this sub-menu and move to the next monitor setup sub-menu.

4.7.12 Change DAC Range?

There are four different DAC (Digital-to-Analog Conversion) range values available in the **MiniRAE 2000: 20, 200, 2000** and **10K ppm**. The maximum 2.5V DC analog signal output from the unit will represent the range value chosen. (See for analog signal output connection.)

1. "Change DAC Range?" is the twelfth sub-menu item in the Monitor Setup menu.
2. Press the **[Y/+]** key, the display shows the current DAC Range value: "DAC Range = 2000 ppm?"
3. Press the **[Y/+]** key to accept the currently displayed value. Press **[N/-]** to scroll through the sub-menu for other range values. Press **[MODE]** to exit this sub-menu and return to the first sub-menu in Table 4.7.
4. If there is any change to the existing selection, press the **[Y/+]** key and the display will show "Save?" Press the **[Y/+]** key to save the change or press the **[N/-]** key to discard and return to the first sub-menu in Table 4.7.

4.7.13 Set Temperature Unit?

The temperature display can be switched between Fahrenheit and Celsius units.

1. "Set Temperature Unit?" is the thirteenth sub-menu item in the Monitor Setup menu.
2. Press the **[Y/+]** key, and the display shows the current setting: "Temperature Unit = Fahrenheit?"
3. Press the **[Y/+]** key to accept the currently displayed value. Press **[N/-]** to select the sub-menu "Temperature Unit = Celsius?" Press **[MODE]** to exit this sub-menu and return to the first sub-menu in Table 4.7.
4. If there is any change to the existing selection, press the **[Y/+]** key and the display will show "Save?" Press the **[Y/+]** key to save the change and return to the first sub-menu in Table 4.7 or press the **[N/-]** key to discard and return to Step 3..

4.8 Exit Programming Mode

1. To exit programming mode from the first tier menu level, press the **[MODE]** key once.
2. To exit programming mode from 2nd tier sub-menu, press the **[MODE]** key twice.
3. To return to programming mode, press and hold down both the **[MODE]** and **[N/-]** keys for 3 seconds.

5. THEORY OF OPERATION

The MiniRAE 2000 monitor uses a newly developed electrodeless discharge UV lamp as the high-energy photon source for the PID. As organic vapors pass by the lamp, they are photo-ionized and the ejected electrons are detected as a current. The PID sensor with a standard 10.6 eV lamp detects a broad range of organic vapors. A lamp with high photon energy (e.g. 11.7 eV) will measure the more kinds of compounds, whereas low photon energies (e.g. 9.8 eV) are selective for easily ionizable compounds such as aromatics. In principle, any compound with an ionization energy lower than that of the lamp photons can be measured.

The PID sensor for the MiniRAE 2000 monitor is constructed as a small cavity in front of the UV lamp. A diaphragm pump draws the gas sample into the sensor and then pumps it out through the side of the instrument.

Figure 5-1 MiniRAE 2000 Block Diagram

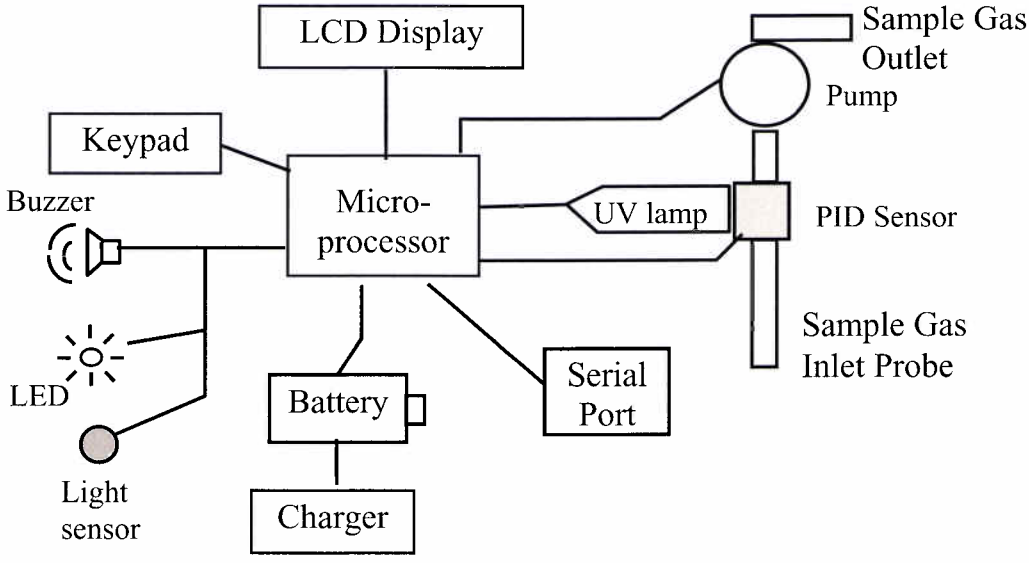

A single chip microcomputer is used to control the operation of the alarm buzzer, LED, pump and light sensor. It measures the sensor readings and calculates the gas concentrations based on calibration to known standard gases. The data are stored in non-volatile memory so that they can be sent to a PC for record keeping. RS-232 transceivers provide a serial interface between the monitor and the serial port of a PC. An LCD display consisting of a single row of eight alpha/numeric characters is used to display the readings. The user interacts with the monitor through three keys on the front panel keypad.

A rechargeable NiMH, NiCd battery, or an alkaline battery pack powers the monitor.

6. MAINTENANCE

The major maintenance items of the MiniRAE 2000 are:

- Battery pack
- Sensor module
- PID lamp
- Sampling pump
- Inlet connectors and filters

Note: Maintenance should be performed by qualified personnel only.

NOTE: The printed circuit board of the monitor is connected to the battery pack even if the power is turned off. Therefore, it is very important to disconnect the battery pack before servicing or replacing any components inside the monitor. Severe damage to the printed circuit board or battery may occur if the battery pack is not disconnected before servicing the unit.

6.1 Battery Charging and Replacement

When the display shows a flashing message "Bat", the battery requires recharging (see Section 3.1 for Battery charging). It is recommended to recharge the MiniRAE 2000 monitor upon returning from fieldwork. A fully charged battery runs a MiniRAE 2000 monitor for 10 hours continuously. The charging time is less than 10 hours for a fully discharged battery. The built-in charging circuit is controlled by the micro-controller to prevent over-charging. The battery may be replaced in the field (in area known to be non-hazardous) if required.

WARNING

To reduce the risk of ignition of hazardous atmospheres, recharge battery only in area known to be non- hazardous. Remove and replace battery only in area known to be non-hazardous.

Replacing Battery Pack

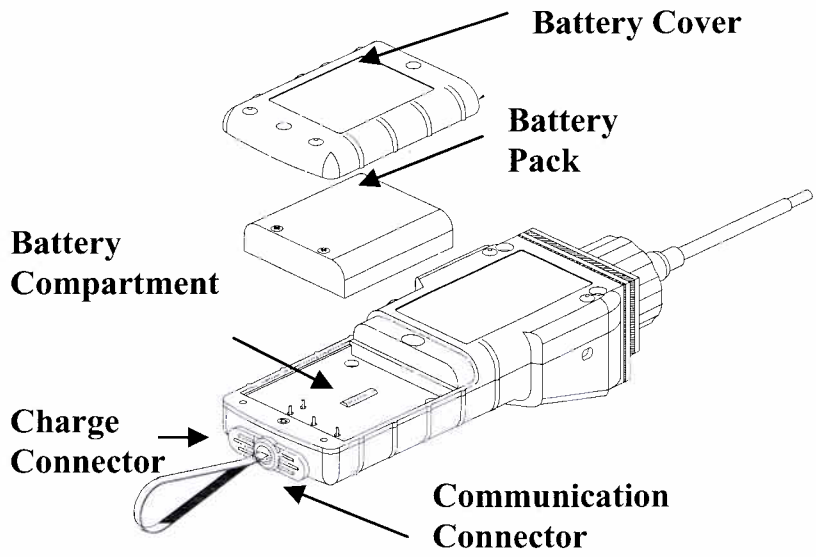

Figure 6-1 Battery Replacement

1.

Turn off the power of the MiniRAE 2000.

2. Unscrew the two battery compartment screws, located on the bottom of the monitor, and remove the cover.
3. Remove the battery pack from the battery compartment.
4. Replace a fully charged spare battery pack inside the battery compartment. Make sure the battery pack is oriented properly inside the compartment
5. Close the battery cover and tighten the two screws.

Replacing Alkaline Battery Adapter

1. Insert four fresh AA size alkaline batteries into the alkaline battery holder. Make sure that the polarity of the batteries is correct.
2. Follow the same procedure as described above to replace the battery holder.

Note: The internal charging circuit is designed to prevent charging to alkaline batteries.

6.2 PID Sensor & Lamp Cleaning/Replacement

The sensor module is made of several components and is attached to the lamp-housing unit as shown in Figure 7-2.

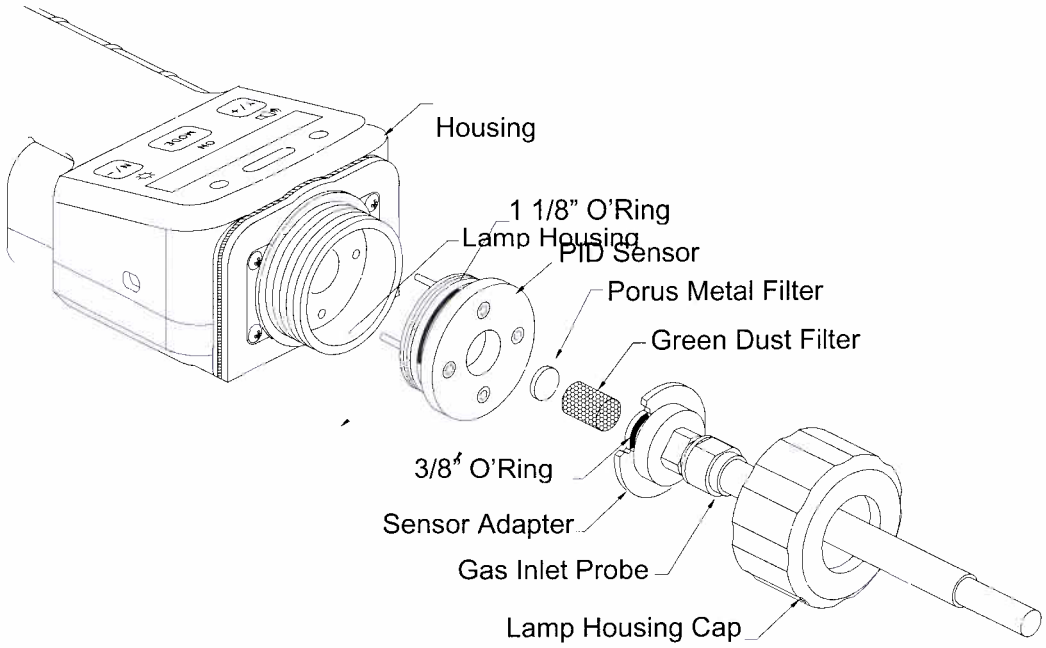

Figure 7-2 Sensor Components

Note: Normally the cleaning procedure is not needed. Clean the PID sensor module, the lamp and the lamp housing only when one of the following happened:

1. The reading is inaccurate even after calibration.
2. The reading is very sensitive to air moisture.
3. A chemical liquid has been sucked into the unit and damaged the unit.

Use of the water trap filter will help prevent contamination and accidentally drawing liquid into the sensor.

To access the sensor components and lamp, gently unscrew the lamp-housing cap, remove the sensor adapter with the gas inlet probe and the metal filter all together. Then hold the PID sensor and pull straight out to avoid bending the electrical pins on the sensor (see Figure 7-2). A slight, gentle rocking motion helps release the sensor.

To clean the PID sensor:

Place the entire PID sensor module into GC grade methanol. It is highly recommended that an ultrasound bath to be used to clean the sensor for at least 15 minutes. Then dry the sensor thoroughly. Never touch the electrodes of the sensor by hand.

Also use a methanol-soaked cotton swab to wipe off the lamp housing where it contacts the sensor when the sensor is installed.

Turn over the sensor so that the pins point up and the sensor cavity is visible. Examine the sensor electrodes for any corrosion, damage, or bending out of alignment. The metal sensor electrode "fingers" should be flat and straight. If necessary, carefully bend the sensor fingers to ensure that they do not touch the Teflon portions and that they are parallel to each other. Make sure that the nuts on the sensor pins are snug but not overtight. If the sensor is corroded or otherwise damaged, it should be replaced.

To clean lamp housing or change the lamp:

To clean lamp housing or change the lamp:

If the lamp does not turn on, the monitor will display an error message to indicate replacement of the lamp may be required.

1. If the lamp is operational, clean the lamp window surface and the lamp housing by wiping it with GC grade methanol using a cotton swab using moderate pressure. After cleaning, hold the lamp up to the light at an angle to detect any remaining film. Repeat the process until the lamp window is clean. Never use water solutions to clean the lamp. Dry the lamp and the lamp housing thoroughly after cleaning.

   CAUTION: Never touch the window surface with the fingers or anything else that may leave a film. Never use acetone or aqueous solutions.

2. If the lamp does not turn on, remove the lamp from the lamp housing. Place the lamp O-ring onto the new lamp. Insert the new lamp, avoiding contact with the flat window surface.
3. Reinstall the PID sensor module.
4. Tighten the Lamp Housing Cap.
5. If the lamp type has been changed, adjust the lamp type setting in the programming mode (Section 4.7.8).

6.3 Sampling Pump

When approaching the end of the specified lifetime of the pump, it will consume higher amount of energy and reduce its sample draw capability significantly. When this occurs, it is necessary to replace or rebuild the pump. When checking the pump flow, make sure that the inlet connector is tight and the inlet tubing is in good condition. Connect a flow meter to the gas inlet probe. The flow rate should be above 450 cc/min when there is no air leakage.

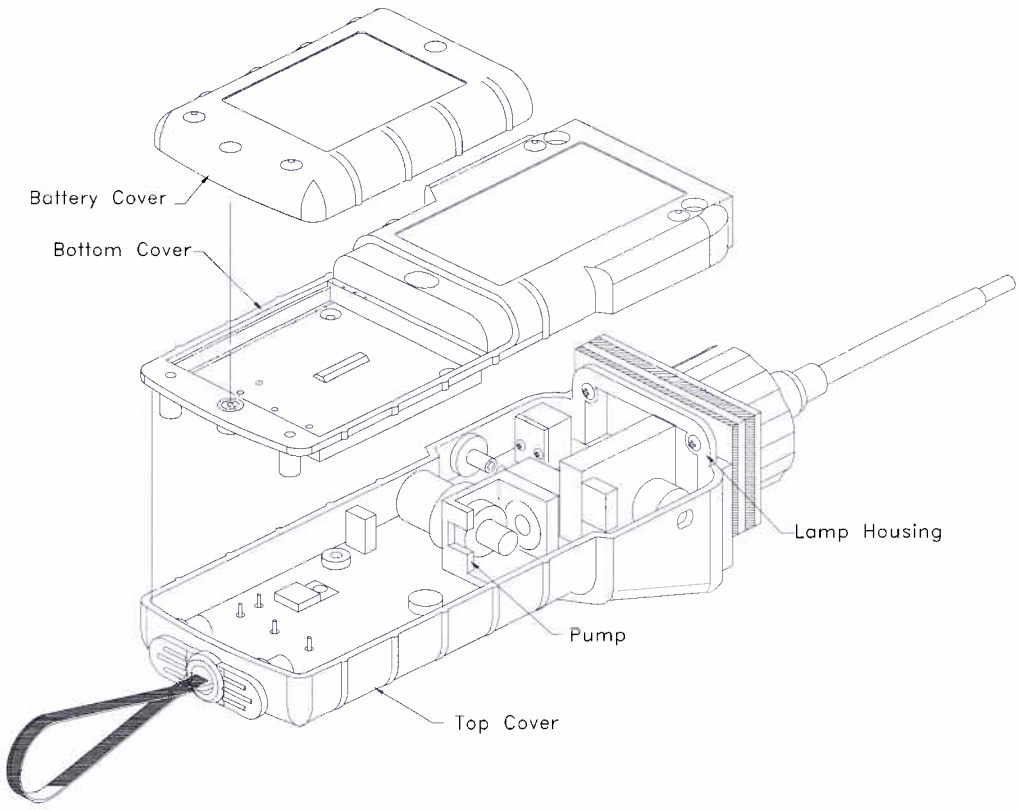

Figure 7-3 Sampling Pump

Pump Replacement

1. Turn off the MiniRAE 2000 power.
2. Open the battery cover, remove the battery pack, and carefully unscrew the six screws to open the bottom cover.
3. Unplug the pump from the PCB. Unscrew the two screws that hold the pump assembly to the PCB. Disconnect the Tygon tubing that connects the pump to the gas inlet port and gas outlet port.
4. Insert a new pump assembly. Connect the Tygon tubing to the gas inlet port. Plug the pump connector back into the PCB and screw down the pump assembly to the board.
5. Replace the bottom cover and tighten the six screws. Reconnect the battery pack. Replace the battery pack and its cover.

6.4 Turning on the UV Lamp

The UV lamp is made of a glass envelope and a UV window (salt crystal) on one end of the envelope. The inside of the lamp is filled with low pressure gases. To turn on the lamp, a high voltage electric field is applied from the outside of the glass envelope. The molecules inside the lamp are ionized and produce a glow discharge that generates the UV light. The MiniRAE 2000 has a built-in sensing mechanism to monitor the status of the UV lamp and display a "Lamp" error message if it is not on.

If the UV lamp has not been used for a long period of time (> 1 month) or is cold, it may become slightly harder to turn on. If such a condition occurs, the "Lamp" message will appear in the monitor display during the power on sequence. This phenomenon is more significant in 0.25" UV lamps used in ToxiRAE and MultiRAE Plus products, because of the relatively small lamp size. To solve this problem, simply turn on and off the monitor a few times and the lamp should turn on. After the UV lamp is turned on for the first time, it should be easier to turn on the UV lamp next time.

It is possible that the UV lamp is actually on when the lamp error message appears. This is because when the lamp becomes old, the internal threshold level to detect lamp failure may have shifted and cause a false alarm. To eliminate such possibility, simply check to see the UV lamp is actually on. This can be done easily by removing the sensor cap and observing the glow light of the UV lamp in a dark place. The user can also feed the monitor with calibration gas and observe if the sensor reading changes. If the reading changes significantly with the gas, the UV lamp is actually on.

A possible failure mechanism for the UV lamp is a leak developed along the seal of the glass envelope. When such condition occurs, the lamp will become very hard or impossible to turn on and will need to be replaced.

7. TROUBLESHOOTING

To aid the user in diagnosing the monitor, a special diagnostic mode can be used displays critical, low level parameters. Section 7.1 describes the operation of the diagnostic mode. Section 7.2 summarizes the frequently encountered problems and suggested solutions. By turning on the MiniRAE 2000 monitor in diagnostic mode and by using the troubleshooting table in Section 7.2, the user can usually correct the problem without having to return the monitor for repair.

WARNING

This function should be used by qualified personnel only! The diagnostic mode allows the user to set several low-level parameters that are very critical to the operation of the monitor. Extra care should be taken when setting these parameters. If the user is not familiar with the function of these parameters and sets them incorrectly, it may cause the monitor to shut down or malfunction.

7.1 Troubleshooting Table

Problem	Possible Reasons & Solutions
Cannot turn on power after charging the battery	**Reasons:** Discharged battery. Defective battery. Microcomputer hang-up. **Solutions:** Charge or replace battery. Disconnect, then connect battery to reset computer.
No LCD back light	**Reasons:** Trigger level too low, the current mode is not user mode, and the mode does not support automatic turn on back light. **Solutions:** Adjust trigger level. Verify the back light can be turned on in user mode. Call authorized service center.
Lost password	**Solutions:** Call Technical Support at +1.408 .752 .0723 or +1. 888 .723 .4800
Reading abnormally High	**Reasons:** Dirty sensor module. Dirty water trap filter. Excessive moisture and water condensation. **Solutions:** Clean sensor module and lamp housing. Replace water trap filter. Blow dry the sensor module.
Buzzer Inoperative	**Reasons:** Bad buzzer. **Solutions:** Call authorized service center.

Inlet flow too low	**Reasons:**	Pump diaphragm damaged or has debris. Flow path leaks.
	Solutions:	Check flow path for leaks; sensor module O-ring, tube connectors, Teflon tube compression fitting. Replace pump or diaphragm.
"Lamp" message during operation	**Reasons:**	Lamp drive circuit. Weak or defective PID lamp, defective.
	Solutions:	Turn the unit off and back on Replace UV lamp
Full scale measurement in humid environment	**Reasons:**	Dirty or wet sensor.
	Solutions:	Clean and dry sensor and lamp housing. Adjust sensor fingers to ensure not touching Teflon. Use water trap filter.
Reading abnormally low	**Reasons:**	Incorrect calibration. Low sensitivity to the specific gas. Weak or dirty lamp. Air leakage.
	Solutions:	Calibrate the monitor. Replace sensor. Clean or replace lamp. Check air leakage.

APPENDIX A. QUICK REFERENCE GUIDE

Press [N/-] and [MODE], simultaneously, for 3 seconds, to enter Programming Mode. Press [MODE] to return to Survey Mode.

PROGRAMMING MODE

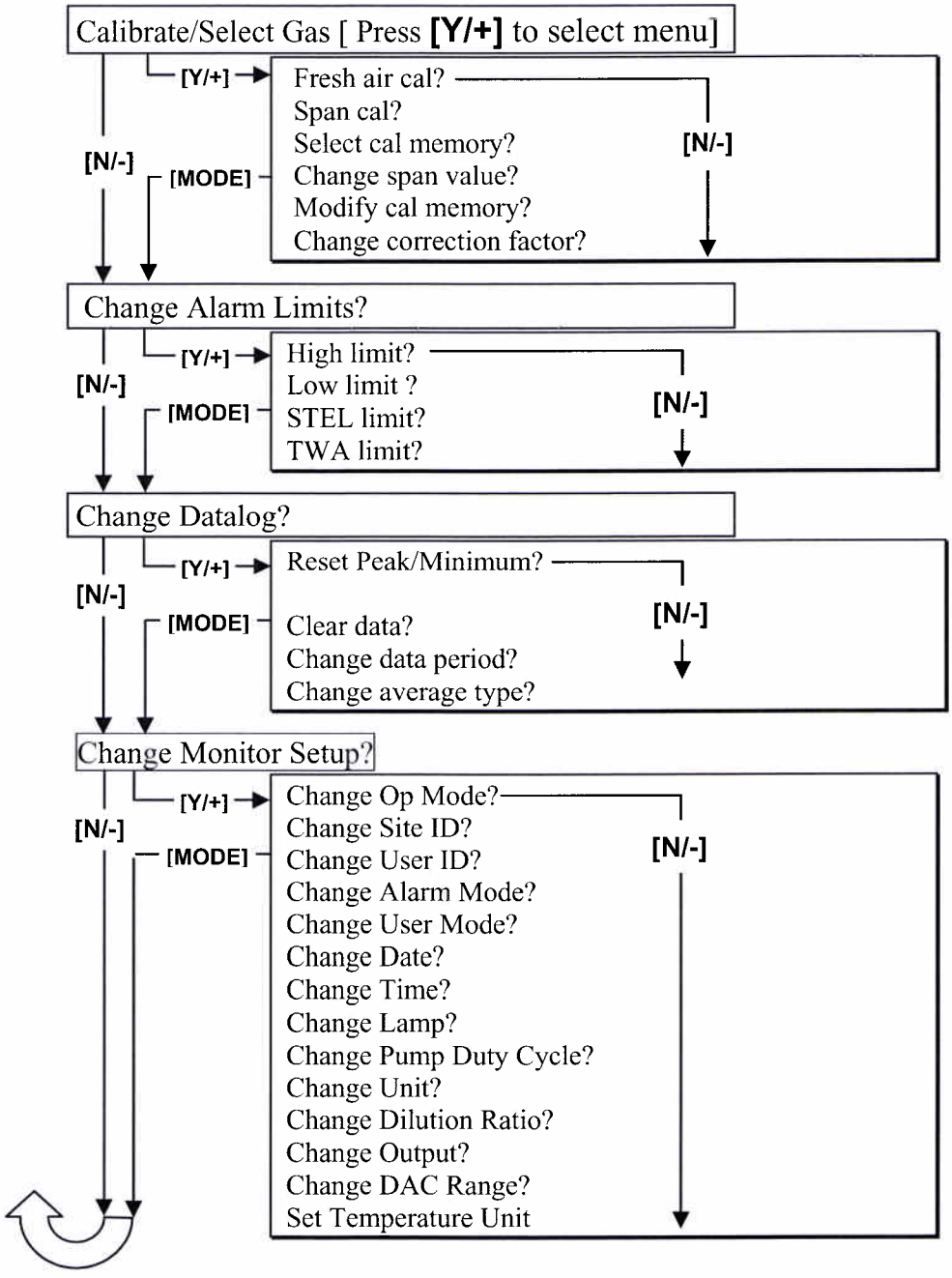

RAE Systems, Inc. Contact Information

Main Office:	3775 N. First St. San Jose, CA 95134-1708 USA
Telephone:	408-952-8200
Fax:	408-952-8480
Instrument Sales:	877-723-2878
Email:	RaeSales@raesystems.com
Website:	www.raesystems.com
Technical Service:	888-723-4800 Tech@raesystems.com

Special Note

If the monitor needs to be serviced, contact either:

1. The RAE Systems distributor from whom the monitor was purchased; they will return the monitor on your behalf.
2. The RAE Systems Technical Service Department. Before returning the monitor for service or repair, obtain a Returned Material Authorization (RMA) number for proper tracking of your equipment. This number needs to be on all documentation and posted on the outside of the box in which the monitor is returned for service or upgrade. Packages without RMA Numbers will be refused at the factory.

APPENDIX C

HUMAN HEALTH RISK ASSESSMENT METHODOLOGY

APPENDIX C
HUMAN HEALTH RISK ASSESSMENT PROTOCOL

Appendix C presents an overview of the human health risk assessment (HHRA) methodology, including a Conceptual Site Model (CSM) that will be used to evaluate chemical concentrations in environmental media at Site 27 (the Fiber Optic Vault), at MCRD Parris Island. Some of the samples collected during this investigation will be used for purposes of drafting an EE/CA, and therefore, this Human Health Risk Assessment Protocol will not apply to the data currently collected in areas where future removal actions take place. Confirmation samples will be collected as part of any removal action and will be used in the Baseline Risk Assessment in place of the data collected in those areas. Other data from previous sampling events and/or the data collected during this investigation, as agreed upon by the Parris Island Partnering Team, will be included in the Risk Assessment and evaluated as described in this Appendix. Current Federal USEPA and USEPA Region IV risk assessment guidance documents were used to develop the HHRA methodology for Site 27.

The HHRA is comprised of the six components listed below:

- Data Evaluation Protocol (including data usability assessment; Chemical of Potential Concern [COPC] selection)
- Exposure Assessment (including CSM)
- Toxicity Assessment
- Risk Characterization
- Uncertainty Analysis
- Development of Remedial Goal Options

C.1 Data Evaluation Protocol

Data evaluation, the first component of a baseline HHRA, is a two-step, media-specific task involving the compilation and evaluation of analytical data. The first step involves the compilation of the analytical database and an evaluation of data usability for purposes of HHRA. (For example, a “data usability” evaluation is recommended in USEPA Risk Assessment Guidance for Superfund (RAGS) Part D [USEPA, 2001]). The second step of the data evaluation is the selection of a medium-specific list of COPCs, which will be used to quantitatively or qualitatively determine potential human health risks for site media. COPCs are selected primarily based on a toxicity screen (i.e., a comparison of site contaminant concentrations to conservative toxicity screening values) and background screen (i.e., a comparison of site concentrations to background concentrations).

C.1.1 Toxicity Screen

The following standards, criteria, and USEPA Regional Screening Levels are the basis of the toxicity screening values recommended for Site 27:

- **Federal Safe Drinking Water Act (SDWA) Maximum Contaminant Levels (MCLs) for Public Drinking Water Supplies.** Primary MCLs are enforceable standards promulgated under the federal SDWA and are designed to be protective of human health. Primary MCLs are based on laboratory or epidemiological studies and apply to public water systems. A public water supply is defined as a system which provides water to the public for human consumption and which has at least 15 service connections or regularly serves an average of at least 25 individuals daily at least 60 days per year. Primary MCLs are designed for the prevention of adverse human health effects but also reflect the technical feasibility of removing a contaminant. Primary (i.e., health based) and secondary (aesthetic-based) MCLs are promulgated under the SDWA. Primary MCLs will be used as toxicity screening levels for chemicals detected in groundwater samples from Site 27. Secondary MCLs are provided as a point of reference only in the COPC selection tables for groundwater but are not used for COPC selection.

- **USEPA Regional Screening Levels (RSLs) for Tap Water, Soil, and for Migration from Soil to Groundwater**. The RSLs were developed and are maintained through a cooperative agreement between ORNL and USEPA's Office of Superfund and are considered to be USEPA screening criteria. The RSLs are chemical concentrations corresponding to fixed levels of risk:

  - A Hazard Quotient [HQ] of 1 for non-carcinogenic chemicals. Adverse non-carcinogenic health effects are not anticipated when the hazard quotient is less than or equal to 1.

  - A lifetime cancer risk of 1×10^{-6} for carcinogenic chemicals. A cancer risk of 1×10^{-6} may be interpreted as one additional case of cancer in one million exposed individuals.

  The recommended COPC screening levels for carcinogenic and non-carcinogenic compounds are typically the RSL and one-tenth the RSL, respectively, when selecting COPCs for groundwater potentially used for domestic purposes and soil. One-tenth the RSL is recommended for non-carcinogenic compounds to account for the potential cumulative effects of multiple compounds affecting the same target organ.

  The RSLs for tap water (which are based on the ingestion and inhalation pathways) and soil (which are based on the incidental ingestion, dermal contact, and inhalation pathways) will be used to identify COPCs in groundwater and soil, respectively. RSLs for transfers of contaminants from soil to groundwater will not be used for COPC selection but will be presented to allow a qualitative

evaluation of the potential for chemical migration from soil to groundwater. Chemicals with concentrations exceeding the RSLs for transfers from soil to groundwater may potentially migrate from the soil to groundwater in sufficient quantities to pose concerns about groundwater quality.

- **USEPA Soil Screening Levels (SSLs) for Migration of Chemicals from Soil to Air.** The USEPA SSLs for the migration of chemicals from soil to air via volatilization and particulate emissions are benchmarks derived to identify chemical concentrations in soils that may adversely affect air quality (USEPA, 1996). The soil to air SSLs are calculated using default, residential land use exposure factors, infinite source models, and conservative default assumptions for source delineation. Therefore, these values are conservative and are designed to be protective of potential exposure at most sites. The USEPA SSLs for soil to air published online at http://rais.ornl.gov/epa/ssl1.shtml will be used to select COPCs since these values are more recent than those published in the 1996 and 2002 SSL guidance documents.

- **USEPA Groundwater Generic Screening Levels for Evaluating the Vapor Intrusion to Indoor Air Pathway (GSL_{Vapor}).** These $GSLs_{Vapor}$ are published in Table 2c of the draft USEPA guidance titled: Evaluating the Vapor Intrusion to Indoor Air Pathway from Groundwater and Soils, EPA530-F-02-052 (USEPA, 2002a). The groundwater $GSLs_{Vapor}$ were derived to identify chemical concentrations in groundwater that may adversely affect the indoor air quality of a building overlying subsurface VOC contamination (i.e., result in indoor air concentrations exceeding the indoor air $GSLs_{Vapor}$).

- **Screening Levels for Lead.** Guidance from the Office of Prevention, Pesticides, and Toxic Substances (OPPTS) and the OSWER recommends 400 mg/kg as a screening level for lead-contaminated soil in a residential setting, where children are frequently present (USEPA, 1994a). This value will be used as the COPC screening level for soils at Site 27. OPPTS also identifies 2,000 to 5,000 mg/kg as an appropriate range for areas where contact with soil by children in a residential setting is less frequent. Guidance from the USEPA Technical Review Workgroup (TRW) for Lead indicates that “a reasonable screening level for soil lead at commercial/industrial (i.e., non-residential) sites is 800 mg/kg” for a typical non-contact intensive worker (USEPA, 2009b). These values will not be used for COPC selection, but may be used in a qualitative evaluation of lead. The SDWA Action Level for lead (15 µg/L [micrograms per liter]) will be used as the screening level for lead in groundwater.

C.1.2 Background Screen

Inorganic COPCs will also be selected based on a comparison of site-specific chemical concentrations to background chemical concentrations. Comparisons will be made between the maximum concentration of

the site-specific chemical and twice the mean of the background chemical concentration. If the maximum detected concentration is less than twice the mean of the background chemical concentrations then that chemical will not be retained as a COPC.

C.1.3 Decision Rules for Establishing COPCs

The following decision rules will be used to select an initial list of COPCs for Site 27:

- A chemical detected in soil will be selected as a COPC for soil if any detected chemical concentration exceeds the screening levels for soils and the background screen indicates that the site concentrations are statistically greater than the corresponding background concentrations.

- A chemical detected in groundwater will be selected as a COPC for groundwater if the maximum detected concentration in any downgradient well exceeds screening levels for groundwater and the background screen indicates that the site contaminant concentrations are statistically greater than the upgradient/cross-gradient concentrations. (A 5 percent level of significance is typically used in the statistical testing performed to compare site concentrations to background concentrations.

The essential nutrients calcium, magnesium, potassium, and sodium will not be selected as COPCs for Site 27. These inorganic chemicals are naturally abundant in environmental matrices and are only toxic at high doses.

If a chemical is not detected in an environmental medium, but the reported detection limits (sample quantitation limits [SQLs]) for the environmental samples exceed the COPC toxicity screening levels, the chemical will be evaluated qualitatively in the uncertainty analysis section of the HHRA.

If a chemical does not have a toxicity screening level but was detected at concentrations exceeding background, the chemical will be selected as a COPC and evaluated qualitatively in the uncertainty analysis section of the HHRA. The evaluation will be based on professional judgment that takes into account the number of times the chemical was detected, the magnitudes of the observed concentrations, the spatial distributions of the detected values, and the toxicities of similar chemicals. In some cases, toxicity screening levels for surrogate chemicals may be used to evaluate chemicals lacking screening levels.

C.2 Exposure Assessment Protocol

The exposure assessment component of a baseline HHRA defines and provides a means to evaluate, quantitatively or qualitatively, the type and magnitude of human exposure to chemicals present at or migrating from a site. A foundation of the exposure assessment is the CSM, which identifies site

characteristics including potential contaminant sources, contaminant release mechanisms, transport routes, receptors, and other appropriate information. (A CSM for Site 27 will be provided in the HHRA). The CSM must consider both current and future land use scenarios. Estimated chemical intakes developed during the exposure assessment are evaluated in the risk characterization to produce quantitative estimates of cancer and non-cancer risk.

C.2.1 Sources of Environmental Contamination

Site 27, the Equipment Parade Deck, is a 1-acre asphalt-covered area formerly used as a parade ground and is currently used for storage of miscellaneous equipment. For an unknown length of time, this site has been an area where out-of-service storage tanks, concrete cylinders, boilers, scrap metal, and piping were stored until suitable facilities for hauling, storage, or destruction of the materials were found. An unknown amount of hazardous materials were handled on the Parade Deck, possibly including waste petroleum products and metals. Additionally, transformers containing PCB oils were reportedly stored in the northern portion of the Equipment Parade Deck; however, the exact location is not known. The asphalt is cracked or deteriorated in several areas, potentially allowing contaminants to enter underlying soil.

C.2.2 Potential Contaminant Migration Routes

Past operations at Site 27 have resulted in the release of contaminants to surface and subsurface soils. These contaminants have been (or may be) transported to adjoining soils and other environmental media (groundwater, air) by a variety of mechanisms.

- **Surface water / sediment runoff**. The topography of Site 27 is generally flat to slightly sloping; surface waters from the study area drain to the pond (SWMU 3) approximately 200 feet to the northwest of the Site 27.

- **Surface soil contaminant transport via wind erosion and vaporization.** Chemicals adsorbed to the surface soil particulates at Site 27 may be transported off-site by wind erosion. The particulates (fugitive dusts) may then be deposited off-site if the grain size is small enough and the wind speed is great enough. Additionally, contaminants may be released from the soil by volatilization if present at significant concentrations. However, as noted above, Site 27 are currently covered with vegetation. This significantly limits the potential for airborne emissions from the site.

- **Downward migration to and transport with groundwater**. The groundwater underlying Site 27 is primarily recharged through the infiltration of precipitation and subsurface flow from upgradient/adjacent areas. This allows for the migration of contaminants downward through the buried

wastes/soil column to the shallow groundwater. The direction of the groundwater flow is anticipated to be to the northwest. Thus, soil contaminants may migrate downgradient (northwest) with the groundwater to the pond (SWMU 3). Once in the pond, contaminants may impact the surface waters, sediments, and fish.

C.2.3 Potential Current and Future Receptors of Concern and Exposure Pathways

MCRD Parris Island is an active Marine Corp base and will remain active for the foreseeable future. For purposes of completeness, the HHRA prepared for the Site 27 will consider receptor exposure under residential, industrial, and recreational land use scenarios. Based on current and potential future land use, the following potential receptors may be exposed to contaminated environmental media at the Site 27:

- **Construction Worker** – A plausible on-site receptor under current or future land use. Construction workers could be exposed to surface and subsurface soils (incidental ingestion; dermal contact), shallow groundwater (dermal contact), as well as airborne contaminants emanating from these media (inhalation). It should be noted that significant exposures by a construction worker to groundwater is unlikely because if a construction worker were to have prolonged contact with groundwater then he/she would most likely wear protective clothing such as rubber boots and/or hip waders, which would limit the receptor's exposure. In addition, most excavation activities would utilize construction equipment such as a back hoe, which would limit a construction worker's exposure. Also, if significant groundwater was encountered during an excavation of a trench or foundation, the groundwater would most likely be pumped out of the excavation so that the construction activities could be completed.

- **Maintenance Worker** – An on-site receptor under current/future land use. This includes adult military or civilian personnel assigned to work (primarily groundskeeping) at Site 27. However, grass mowing is the only current groundskeeping activity on-going at the study area. The maintenance worker could be exposed to soil (incidental ingestion; dermal contact), and air (inhalation) during groundskeeping or maintenance activities. It is anticipated that the facility maintenance worker would not be routinely exposed to groundwater. This receptor is expected to be exposed to surface soils on a less frequent basis (i.e., in terms of days per year) than the typical industrial or construction worker. This receptor could also be exposed to subsurface soil if subsurface soils were excavated and deposited on existing surface soils.

- **Industrial Worker** – An on-site receptor under a future land use scenario. This includes personnel assigned long-term activities at Site 27 in the future. This receptor could be exposed to surface soil (incidental ingestion; dermal contact) and air (inhalation). It is anticipated that this receptor would not be routinely exposed to groundwater. This receptor is expected to be exposed to surface soils over a

longer time frame (but less intensely) than the construction worker. This receptor could also be exposed to subsurface soil if subsurface soils were excavated and deposited on existing surface soils. Indoor full-time industrial workers may also be exposed to COPCs that have volatilized from groundwater and have migrated through building foundations into indoor air.

- **Adult Visitors** are individuals who may cross the site on their way to other places at the base. The adult visitor receptor is similar to the trespasser receptor. The adult visitor is being evaluated instead of an adult trespasser because access to the site is not restricted and the site is located in an area that is readily accessible by the public. This receptor could be exposed to surface soil (incidental ingestion; dermal contact) and air (inhalation). This receptor could also be exposed to subsurface soil if subsurface soils were excavated and deposited on existing surface soils.

- **Future On-site Residents** – Given the anticipated future land use for much of Site 27, this is a very unlikely future receptor. However, the hypothetical future residential scenario is typically evaluated in a risk assessment for decision-making purposes. For example, the need for deed restrictions at a site may be eliminated prior to site closure if minimal risks are estimated for residential receptors. It is assumed that a hypothetical resident may be exposed to soils (0 to 10 feet bgs, or if shallower, to soils to the top of the water table)(incidental ingestion; dermal contact), groundwater (ingestion, dermal contact) and air (inhalation). Also, hypothetical residents could be exposed to VOCs migrating from contaminated subsurface soils or groundwater to the indoor air of a home. (Please note that receptor exposure to subsurface soil would only occur if subsurface soils were excavated and deposited on existing surface soils. Although this is an unlikely scenario, it is included in this HHRA for purposes of completeness and to aid the risk managers regarding the need for deed restrictions.)

Potential risks associated with the inhalation of particulates or VOCs emanating from surface and subsurface soils were evaluated (in the COPC selection process) by comparing the maximum site soil concentrations to the USEPA Generic SSLs for transfers from soil to air. COPCs were only identified for subsurface soil; therefore, a quantitative analysis of the inhalation exposure pathway was performed for subsurface soil only for the maintenance worker, industrial worker, adult visitor and hypothetical resident. Fugitive dust emissions under a construction scenario are likely to be higher than those under a residential scenario; therefore, the inhalation pathway was evaluated for surface soil and subsurface soil for construction workers.

C.2.4 Calculation of Exposure Point Concentrations

The exposure point concentration (EPC), which is calculated for COPCs only, is an estimate of the chemical concentration within an exposure unit (EU) likely to be contacted over time by a receptor and is used to estimate exposure intakes. An exposure unit is defined as the area typically

encountered/traversed by a receptor under a particular land use scenario. The following paragraphs discuss the EUs to be typically evaluated and the guidelines for calculating the EPC.

EUs for receptors potentially exposed to surface or subsurface soils will likely include all sampled locations within a study area unless:

- The analytical data for soils suggest that significant contaminant hot spot(s)/sub-area(s) exist within the study area, and
- The hot spot(s)/sub-area(s) is (are) large enough to be considered an EU for one or more of the receptors being evaluated.

For example, a residential lot size of ¼ acre to 2 acres is often used for the evaluation of a hypothetical future resident. The size of an EU will be based on the distribution of the chemical concentrations in soils and on presumed receptor activity patterns.

If a discernable groundwater plume is identified at Site 27, then in accordance with USEPA Region IV guidance, the arithmetic average of the wells in the highly concentrated area of the plume will be used as the EPC for groundwater. If no discernable groundwater plume is identified then the maximum detected concentration will be used as the EPC for COPCs in groundwater.

EPCs will be calculated following USEPA's Calculating Upper Confidence Limits for Exposure Point Concentrations at Hazardous Waste Sites (USEPA, 2002d) using the current version of USEPA's ProUCL software. Sample and duplicate analytical results will be averaged for statistical use before the EPC is calculated. Non-detected values will be evaluated using the statistical procedures in USEPA's ProUCL software.

C.2.5 Chemical Exposure and Intake Estimation

The methodologies and techniques used to estimate exposure intakes are presented in this section. Exposures at Site 27 are dependent on the predicted concentrations of chemicals in environmental media and local land use practices, and both are subject to change over time. This results in a large number of possible combinations of receptors, media, exposure pathways, and concentrations. Table B-1 presents a summary of the receptors and exposure pathways to be evaluated in the quantitative risk assessment. The exposure assumptions reflect current USEPA guidance.

Intakes for the identified potential receptor groups will be calculated using current USEPA risk assessment guidance and will be presented in risk assessment spreadsheets using the USEPA RAGS

Part D table format (USEPA, 2001). The exposure assumptions for all receptors and exposure pathways that will be used to estimate chemical intakes in the HHRA are summarized in Table C-2.

Noncarcinogenic intakes are estimated using the concept of an average annual exposure. Carcinogenic intakes are calculated as an incremental lifetime exposure, which assumes a life expectancy of 70 years.

Incidental Ingestion of Soil

Direct physical contact with surface and/or subsurface soil at Site 27 may result in the incidental ingestion of chemicals in soil. Chemical intake for the incidental ingestion of soil is estimated in the following manner (USEPA, 1989a):

$$\text{Intake} = \frac{(C_{soil})(IR)(FI)(EF)(ED)(CF)}{(BW)(AT)}$$

where:

Intake	=	intake of chemical from soil (mg/kg/day)
C_{soil}	=	concentration of chemical in soil (mg/kg)
IR	=	ingestion rate (mg/day)
FI	=	fraction ingested from contaminated source (dimensionless)
EF	=	exposure frequency (days/yr)
ED	=	exposure duration (yr)
CF	=	conversion factor (1×10^{-6} kg/mg)
BW	=	body weight (kg)
AT	=	averaging time (days):
		for noncarcinogens, AT = ED x 365 days/yr
		for carcinogens, AT = 70 yr x 365 days/yr

Most of the exposure assumptions that will be used to estimate chemical intakes from incidental ingestion of soil are based on default assumptions described in the standard USEPA guidance for the evaluation of the hypothetical future resident, typical industrial worker, or construction worker and are summarized in Table C-2. The following paragraphs briefly discuss the non-default, receptor-specific exposure assumptions (for incidental ingestion of soil) that will be used in the HHRA.

There are no USEPA default recommendations for exposure frequency for the maintenance worker or adult visitor potentially exposed to soil. Consequently values were derived based on professional judgment. Maintenance workers and adult visitors are assumed to be exposed to soil 1 day per week (or 50 days a year). It should be noted that the maintenance worker is not the same as the industrial

worker whose work assignment requires him/her to be at Site 27 on a daily basis (and is, thus exposed 250 days a year). It is assumed that construction workers assigned to future excavation projects at Site 27 are exposed to soil for 150 days a year for one year.

Dermal Contact with Soil

Direct physical contact with soil may result in the dermal absorption of chemicals in soil. Exposure associated with dermal contact with soil is estimated in the following manner (USEPA, 1989a):

$$\text{Intake} = \frac{(C_{soil})(SA)(AF)(ABS)(CF)(EF)(ED)}{(BW)(AT)}$$

where:

Intake	=	amount of chemical absorbed during contact with soil (mg/kg/day)
C_{soil}	=	concentration of chemical in soil (mg/kg)
SA	=	skin surface area available for contact (cm^2)
AF	=	skin adherence factor (mg/cm^2/event)
ABS	=	absorption factor (dimensionless)
CF	=	conversion factor (1×10^{-6} kg/mg)
EV	=	event frequency (events/day)
EF	=	exposure frequency (days/yr)
ED	=	exposure duration (yr)
BW	=	body weight (kg)
AT	=	averaging time (days):
		for noncarcinogens, AT = ED x 365 days/yr
		for carcinogens, AT = 70 yr x 365 days/yr

Most of the exposure assumptions that will be used to estimate chemical intakes from dermal contact with soil are based on the default assumptions described in the standard USEPA guidance for the evaluation of the hypothetical future resident, industrial worker, or construction worker. The following paragraphs briefly discuss non-default, receptor-specific exposure assumptions (for dermal contact with soil) that will be used in the HHRA.

A summary of the receptor-specific input values that will be used to estimate chemical intakes from dermal contact with soil are presented in Table C-2. The same exposure frequencies and durations recommended for the evaluation of the incidental ingestion of soil are used to estimate chemical intakes for dermal contact with soil. The soil adherence factors presented are those listed in Exhibits 3.3 and 3.5

of RAGS Part E. To the extent possible, chemical specific dermal absorption factors provided in RAGS Part E and USEPA Region IV guidance were used to evaluate the COPCs for soil.

Inhalation of Fugitive Dust/Volatile Emissions from Surface and Subsurface Soils

As mentioned previously, a qualitative evaluation of exposure to fugitive dust/volatile emissions from soil (i.e., comparison of maximum site soil concentrations to USEPA generic SSLs for chemical transfers from soil to air) will be used to identify whether a quantitative analysis of the inhalation exposure pathway is warranted. If the maximum chemical concentration in soil exceeds the SSL, then quantitative risk from inhalation of air and fugitive dust will be evaluated. Intakes of both particulates and vapors/gases are calculated using the same equation, as follows (USEPA, 2009a):

$$EC = \frac{(C_{air})(ET)(EF)(ED)}{(AT)(24\ \text{hours}/\text{day})}$$

where:

EC	=	exposure concentration (mg/m^3)
C_{air}	=	concentration of chemical in air (mg/m^3)
ET	=	exposure time (hours/day)
EF	=	exposure frequency (days/yr)
ED	=	exposure duration (yr)
AT	=	averaging time (hours);
	=	for noncarcinogens, AT = ED x 365 days/yr;
	=	for carcinogens, AT = 70 yr x 365 days/yr

The concentrations of chemicals in air resulting from emissions from soil were developed following procedures presented in USEPA Soil Screening Guidance (USEPA, 2002e). The chemical concentration in air is calculated as follows:

$$C_{air} = C_{soil} \times \left[\frac{1}{PEF} + \frac{1}{VF}\right]$$

where:

C_a	=	chemical concentration in air (mg/m^3)
C_s	=	chemical concentration in soil (mg/kg)
PEF	=	particulate emission factor (m^3/kg)
VF	=	volatilization factor (m^3/kg)

The particulate emissions factor, PEF, relates the concentration of the chemical in soil with the concentration of dust particles in air. A PEF value of 9.63 x 10^{+9} m^3/kg was obtained from USEPA's Soil Screening Internet site located at http://risk.lsd.ornl.gov/calc_start.htm. This is the default value for Charleston, South Carolina which is the closest city to Site 27 listed on the Internet site. Because air emissions resulting from fugitive dust emissions settings will be different than dust emissions generated during construction activities, a separate PEF was used for construction activities. The PEF for construction workers (1.27 x 10^{+6} m^3/kg) was calculated using the equations presented in the supplemental SSL guidance document (USEPA, December 2002a). Sample calculations for the PEFs are presented in Attachment A.

Ambient air concentrations resulting from the volatilization of COPCs from soil are chemical dependent and will be using the following equation from USEPA's Soil Screening Guidance (USEPA, 1996):

$$VF = \frac{Q/C \times (3.14 \times D_a \times T)^{0.5} \times 10^{-4} \ (m^2 / cm^2)}{(2 \times \rho_b \times D_a)}$$

and

$$D_a = \frac{[(\theta_a^{10/3} \times D_i \times H' + \theta_w^{10/3} \times D_w)/n^2]}{\rho_b \times K_d + \theta_w + \theta_a \times H'}$$

where:

VF	=	volatilization factor (m^3-air/kg-soil)
Q/C	=	inverse of the mean concentration at the center of source (gm/m^2-sec per kg/m^3)
D_a	=	apparent diffusivity, chemical specific, (cm^2/sec)
T	=	exposure interval, exposure specific, (sec)
ρ_b	=	dry bulk soil particle density (g/cm^3)
θ_a	=	air-filled soil porosity (L_{air}/L_{soil})
D_i	=	diffusivity in air, chemical specific, (cm^2/sec)
n	=	total soil porosity (L_{pore}/L_{soil})
θ_w	=	water-filled soil porosity (L_{air}/L_{soil})
D_w	=	diffusivity in water, chemical specific, (cm^2/sec)
K_d	=	soil-water partition coefficient, chemical specific (cm^3/g)
H'	=	dimensionless Henry's law constant, chemical specific

For the HHRA, chemical properties for COPCs will be obtained from the Supplemental Guidance for Developing Soil Screening Levels for Superfund Sites (USEPA, 2002e).

Ingestion of groundwater at Site 27 is expected to be limited to exposure that would occur under a future residential scenario. Hypothetical future on-base residential receptors are conservatively assumed to use groundwater as a potable water source and may be exposed to groundwater via direct ingestion. Groundwater exposure for hypothetical future on-site residents would occur on a daily basis. Chronic Daily Intakes (CDI) associated with ingestion of groundwater will be evaluated using the following equation (USEPA, 1989a):

$$\text{Intake} = \frac{(C_{gw})(IR)(EF)(ED)}{(BW)(AT)}$$

where:

Intake	=	intake of chemical from groundwater (mg/kg/day)
C_{gw}	=	concentration of chemical in groundwater (mg/L)
IR	=	ingestion rate for groundwater (L/day)
EF	=	exposure frequency (days/yr)
ED	=	exposure duration (yr)
BW	=	body weight (kg)
AT	=	averaging time (days):
		for noncarcinogens, AT = ED x 365 days/yr
		for carcinogens, AT = 70 yrs x 365 days/yr

All of the exposure assumptions that will be used to estimate chemical intakes from ingestion of groundwater are default assumptions described in the standard USEPA guidance and are summarized in Table C-2.

Dermal Contact with Groundwater

Direct contact with groundwater at Site 27 is expected to be limited to exposure that would occur under future on-site residential and construction scenarios. Hypothetical future on-site residential receptors are assumed to use groundwater for domestic purposes (i.e., bathing, showering, washing dishes), that can result in a dermal exposure. A construction worker may be dermally exposed to shallow groundwater during potential future excavation activities at Site 27 (e.g., shallow groundwater pooling at the bottom of an excavation pit.).

The following equation is used to assess exposures resulting from dermal contact with groundwater (USEPA, 2004):

$$DAD = \frac{(DA_{event})(EV)(ED)(EF)(SA)}{(BW)(AT)}$$

where:

DAD	=	dermally absorbed dose of chemical from water (mg/kg/day)
DA_{event}	=	dermally absorbed dose per event (mg/cm^2-event)
EV	=	event frequency (events/day)
ED	=	exposure duration (yr)
EF	=	exposure frequency (days/yr)
A	=	skin surface area available for contact (cm^2)
BW	=	body weight (kg)
AT	=	averaging time (days):
		for noncarcinogens, AT = ED x 365 days/yr
		for carcinogens, AT = 70 yrs x 365 days/yr

Most of the exposure assumptions that will be used to estimate chemical intakes from dermal contact with groundwater are based on default assumptions described in the standard USEPA guidance and are summarized in Table C-2. Dermal intakes for residents will assume total body exposure on a daily basis.

There are no USEPA default assumptions for the exposure frequency for a construction worker exposed to groundwater. Consequently, it is assumed that the construction worker will be exposed to groundwater 8 hours/day for 30 days a year. A shorter exposure frequency is recommended for a construction worker exposed to groundwater than is recommended for exposure to soil because it is unlikely that a construction worker will have direct contact with groundwater on a daily basis during the entire length construction project.

The absorbed dose per event (DA_{event}) is estimated using a nonsteady-state approach for organic compounds and a traditional steady-state approach for inorganics (USEPA, 2004). For organics, the following equations apply:

$$\text{If } t_{event} < t^*, \text{ then: } DA_{event} = (2)(K_p)(FA)(C_w)(CF)\left(\sqrt{\frac{6\,\tau\, t_{event}}{\pi}}\right)$$

$$\text{If } t_{event} > t^*, \text{ then: } DA_{event} = (K_p)(FA)(C_w)(CF)\left(\frac{t_{event}}{1+B} + 2\,\tau\left(\frac{1+3B+3B^2}{(1+B)^2}\right)\right)$$

where:

DA_{event}	=	absorbed dose per event (mg/cm^2-event)
FA	=	fraction absorbed (dimensionless) – chemical specific
t_{event}	=	duration of event (hr/event)

t^*	=	time it takes to reach steady-state conditions (hr)
K_p	=	permeability coefficient from water through skin (cm/hr)
C_w	=	concentration of chemical in water (mg/L)
τ	=	lag time (hr)
π	=	constant (dimensionless; equal to 3.14159)
CF	=	conversion factor (0.001 L/cm^3)
B	=	partitioning constant derived by Bunge Model (dimensionless)

Values for the chemical-specific parameters (t^*, K_p, FA, τ, and B) are obtained from the current dermal guidance (USEPA, 2004, Exhibit B-3). If published values are not available for a particular compound; they will be calculated using equations provided in the USEPA dermal guidance (2004).

The following steady-state equation is used to estimate DA_{event} for inorganics (USEPA, 2004):

$$DA_{event} = (K_p)(C_w)(t_{event})$$

The dermal permeability (K_p) values recommended in the USEPA dermal guidance (USEPA, 2004) will be used to calculate DA_{event} for inorganic COPCs.

Inhalation of Chemicals Volatilized From Groundwater

Groundwater exposure may also result in chemical intake through inhalation if the water resource is used as a domestic water supply or is exposed during construction activities, and VOCs are present in the groundwater. This exposure route is plausible for residential receptors that may be exposed while showering, bathing, washing dishes, etc., or for construction workers contacting shallow groundwater during excavation activities. Per USEPA Region IV risk assessment protocol, it will be assumed that the chemical intake resulting from a showering exposure is equivalent to the chemical intake from ingestion of two liters of water. Inhalation exposures for the construction worker shall be estimated using an air intake estimation model.

For construction workers, chemical intakes from inhalation exposure due to the volatilization of COPCs in groundwater are estimated in the following manner (USEPA, 2009a):

$$EC = \frac{(C_{air})(ET)(EF)(ED)}{(AT)(24\ \text{hours/day})}$$

where:

EC	=	exposure concentration (mg/m^3)

C_{air}	=	concentration of chemical in air (mg/m^3)
ET	=	exposure time (hours/day)
EF	=	exposure frequency (days/yr)
ED	=	exposure duration (yr)
AT	=	averaging time (days);
	=	for noncarcinogens, AT = ED x 365 days/yr;
	=	for carcinogens, AT = 70 yr x 365 days/yr

Construction workers may be exposed to COPCs that have volatilized from groundwater when excavation exposes the shallow water table. The same exposure frequency and exposure time used to estimate intake from dermal contact with groundwater will be used to evaluate intake from inhalation of VOCs from groundwater during construction activities.

There are no well-established models available for estimating migration of volatiles from groundwater into a construction/utility trench. To estimate the EPC for a volatile chemical in the air in a construction trench, the HHRA will utilized an approach suggested by the Virginia Department of Environmental Quality (VDEQ, 2008), which is based on a combination of a vadose zone model (to estimate volatilization of gases from contaminated groundwater into a trench) and a box model (to estimate dispersion of the contaminants from the air inside the trench into the above-ground atmosphere). The VDEQ methodology is described in the following paragraphs.

The airborne concentration of a contaminant in a trench can be estimated using the following equation:

$$C_{air} = (C_{GW})\ (VF)$$

where:

C_{air} = air concentration of contaminant in the trench (mg/m^3)

C_{GW} = concentration of contaminant in groundwater (mg/L)

VF = volatilization factor (L/m^3)

It is assumed that a construction project could result in an excavation of 15 feet bgs or less. If the depth to groundwater at a site is less than 15 feet, the VDEQ model assumes that a worker would encounter groundwater when digging an excavation or a trench. The worker would then have direct exposure to the groundwater. The worker would also be exposed to contaminants in the air inside the trench that would result from volatilization from the groundwater pooling at the bottom of the trench.

The following equation is used to calculate the volatilization factor (VF) for a trench less than 15 feet deep.

$$VF = (Ki \times A \times F \times 10^{-3} \times 10^{4} \times 3{,}600) / (ACH \times V)$$

where:

Ki = overall mass transfer coefficient of component i (cm/s)

A = area of the trench (m^2)

F = fraction of trench floor through which contaminant can enter (unitless)

ACH = air changes per hour (h^{-1}) = 360 h^{-1}

V = volume of trench (m^3)

10^{-3} = conversion factor (L/cm^3)

10^4 = conversion factor (cm^2/m^2)

3,600 = conversion factor (seconds/hr)

Studies of urban canyons suggest that if the ratio of trench width, relative to wind direction, relative to trench depth, is less than or equal to 1, a circulation cell or cells will be set up within the trench that limits the degree of gas exchange with the atmosphere and, based upon measured ventilation rates of buildings, the air changes per hour (ACH) is assumed to be 2/hr. Based upon the ratio of trench depth to the average wind speed, if the ratio of trench width to trench depth is greater than one, then the air exchange between the trench and above-ground atmosphere is not restricted, and the ACH is assumed to be 360/hr. The exposure assessment performed for the HHRA will assume the width to trench depth ratio is greater than 1; therefore, the ACH will be set to 360 per hour.

The formula for calculating the overall mass transfer coefficient for K_i is:

$$K_i = 1 / \{(1/k_iL) + [(RT) / (H_i\, k_iG)]\}$$

where:

k_iL = liquid-phase mass transfer coefficient of component i (cm/s)

R = ideal gas constant (atm-m^3/mole-°K) = 8.2×10^{-5}

T = average system absolute temperature (°K) (Default = 298°K)

H_i = Henry's Law constant of component i (atm-m^3/mol)

k_iG = gas-phase mass transfer coefficient of component i (cm/s)

The formulas for calculating k_iL and k_iG are presented below:

$$k_iL = (MWO_2/MW_i)^{0.5} \times (T/298) \times kL,O_2$$

where:

k_iL = liquid-phase mass transfer coefficient of component i (cm/s)

MWO_2 = molecular weight of O_2 (g/mol)

MW_i = molecular weight of component i (g/mol)

kL,O_2 = liquid-phase mass transfer coefficient of oxygen at 25°C (cm/s). The value of kL,O_2 is 0.002 cm/s.

$$k_iG = (MWH_2O/MW_i)^{0.335} \times (T/298)^{1.005} \times kG,H_2O$$

where:

k_iG = gas-phase mass transfer coefficient of component i (cm/s)

MWH_2O = molecular weight of water (g/mol)

kG,H_2O = gas-phase mass transfer coefficient of water vapor at 25°C cm/s. The value of kG,H_2O is 0.833 cm/s (Superfund Exposure Assessment Manual, EPA, 1988).

For the HHRA, chemical properties will be obtained for COPCs from the Supplemental Guidance for Developing Soil Screening Levels for Superfund Sites (USEPA, 2002e).

C.2.6 Vapor Intrusion into Buildings

Current/future industrial workers and hypothetical residents may be exposed to COPCs that have volatilized from groundwater and migrated through building foundations into indoor air. Indoor air concentrations resulting from vapor intrusion from groundwater were estimated using the Johnson and Ettinger volatilization model (USEPA, 2004b). The model assumes that vapors of volatile chemicals are emitted from groundwater, migrate through subsurface soil, through cracks in the building foundation, and accumulate in air inside a building.

C.2.7 Risk Evaluation Protocol for Lead

In addition to the quantitative risk evaluation described in the preceding paragraphs, lead (if selected as a COPC) will be evaluated using the following models:

- The latest version of the USEPA's Integrated Exposure Uptake Biokinetic (IEUBK) Model for lead (USEPA, 1994b). This model is typically used to evaluate lead exposure assuming a residential land use scenario.

- The USEPA's TRW Model for Lead (USEPA, 2003a). This model is typically used to evaluate lead exposure assuming a non-residential land use scenario.

The IEUBK Model for lead (USEPA, 1994b) is designed to estimate blood levels of lead in children (under 7 years of age) based on either default or site-specific input values for air, drinking water, diet, dust, and soil exposure. Studies indicate that infants and young children are extremely susceptible to adverse effects from exposure to lead. Considerable behavioral and developmental impairments have been noted in children with elevated blood lead levels. The threshold for toxic effects from this chemical is believed to be in the range of 10 µg/dL to 15 µg/dL. Blood lead levels greater than 10 µg/dL in children are considered to be a "concern".

The IEUBK Model for lead will be used to address exposure to lead in children when detected soil concentrations exceed the OSWER screening level of 400 mg/kg for residential land use. Average chemical concentrations, as well as default parameters for some input parameters, will be employed. Estimated blood lead levels and probability density histograms will be presented as support documentation for this analysis and appended to the site-specific risk assessment.

Non-residential adult exposure to lead in soil will be evaluated using the USEPA TRW Model for Lead (USEPA, 2003a). In this model, adult exposure to lead in soil is addressed by an evaluation of the relationship between the site soil lead concentration and the blood lead concentration in the developing fetuses of adult women. The adult lead model generates a spreadsheet for each exposure scenario evaluated (i.e., industrial, recreational). The spreadsheet contains a calculation to determine the probability that the blood lead concentrations in the fetus exceeds 10 µg/L. The probability that the fetal blood lead level exceeds 10 µg/L will be calculated per the following USEPA guidelines:

- Use of the TRW Interim Adult Lead Methodology in Risk Assessment, Memorandum from Pat Van Leeuwen (Region 5 Superfund Program) and Paul White (ORD/NCEA) to Mark Maddaloni, Chair, TRW Adult Lead Subgroup, April 7, 1999.

- Frequently Asked Questions (FAQs) on the Adult Lead Model, Technical Review Workgroup for Lead, June 3, 2009b.

No models are currently available to evaluate the periodic exposure of adolescent trespassers to lead. Therefore, the results of the IEUBK Model for children will be used to qualitatively assess exposure for this receptor. Essentially, the qualitative discussion will cite that potential adverse effects from exposure to lead are expected to be of a lesser magnitude for adolescent trespassers than for children.

C.2.8 Assessing Cancer Risks from Early Life Exposures

USEPA's Supplemental Guidance of Assessing Susceptibility from Early-Life Exposure to Carcinogens (USEPA, 2005a) recommends making adjustments to the toxicity of carcinogenic chemicals which act via the mutagenic mode of action when evaluating early life exposures. The guidance recommends using age dependent adjustment factors (ADAFs) combined with age specific exposure estimates when assessing cancer risks. In the absence of chemical specific data the supplemental guidance recommends the following default adjustments for chemicals (except vinyl chloride) that act via a mutagenic mode of action which reflect that cancer risks are generally higher from early-life exposures than from similar exposures later in life:

- For exposures before 2 years of age (i.e., spanning a 2-year interval from the first day of birth up until a child's second birthday), a 10-fold adjustment.

- For exposures between 2 and < 16 years of age (i.e., spanning a 14-year time interval from a child's second birthday up until their sixteenth birthday), a 3-fold adjustment.

- For exposures after turning 16 years of age, no adjustment.

The adjustments were applied using the same method as that used by the ORNL in the development of the RSLs. Children were evaluated as two age groups, ages 0 to 2 years and ages 2 to 6 years; and adults were evaluated as two age groups, ages 6 to 17, and ages greater than 16 years old. Using this approach the intakes for hypothetical residents were calculated as follows:

$$\text{Intake}_{\text{Child}} = \text{Intake}_{(\text{ages } 0 - 2 \text{ years})} \times 10 + \text{Intake}_{(\text{ages } 2 - 6 \text{ years})} \times 3$$
$$\text{Intake}_{\text{Adult}} = \text{Intake}_{(\text{ages } 6 - 16 \text{ years})} \times 3 + \text{Intake}_{(\text{ages} > 16 \text{ years})}$$

The above approach was used only for those chemicals which are identified as mutagenic in the RSL screening table (e.g., carcinogenic PAHs).

C.3 Toxicity Assessment Protocol

The objective of the toxicity assessment is to identify the potential adverse health effects in exposed populations. Quantitative estimates of the relationship between the magnitude and type of exposures and

the severity or probability of human health effects are defined for the identified COPCs. Quantitative toxicity values determined during this component of the risk assessment are integrated with outputs of the exposure assessment to characterize the potential for the occurrence of adverse health effects for each receptor group.

The toxicity value used to evaluate noncarcinogenic health effects for ingestion and dermal exposures is the reference dose (RfD). The reference concentration (RfC) is used to evaluate noncarcinogenic health effects for inhalation exposures. The RfD and RfC is an estimate of the daily exposure level for the human population that is likely to be without appreciable risk during a portion or all of a lifetime. It is based on a review of available animal and/or human toxicity data, with adjustments for various uncertainties associated with the data. Carcinogenic effects are quantified using the cancer slope factor (CSF) for ingestion and dermal exposures and inhalation unit risks (IUR) for inhalation exposures, which is a plausible upper-bound estimate of the probability of development of cancer per unit intake of chemical over a lifetime. It is based on available dose-response data from human and/or animal studies.

C.3.1 Sources of Toxicity Criteria

Oral RfDs and CSFs and inhalation RfCs and IURs to be used in the site-specific risk assessments will be obtained from the following primary USEPA literature sources (USEPA, 2003c):

- Integrated Risk Information System (IRIS).

- USEPA Provisional Peer Reviewed Toxicity Values (PPRTVs) – The Office of Research and Development/National Center for Environmental Assessment (NCEA) Superfund Health Risk Technical Support Center develops PPRTVs on a chemical specific basis when requested by USEPA's Superfund program.

- Other Toxicity Values – These sources include but are not limited to California Environmental Protection Agency (Cal EPA) toxicity values, the Agency for Toxic Substances and Disease Registry (ATSDR) Minimal Risk Levels (MRLs), and the Annual Health Effects Assessment Summary Tables (HEAST) (USEPA, 1997b).

Although RfDs and CSFs can be found in several toxicological sources, USEPA's IRIS online database is the preferred source of toxicity values. This database is continuously updated, and presented values have been verified by USEPA. The USEPA RSL table may also be used as a source of toxicity criteria. This table is updated several times a year and reflects recent changes in IRIS and some of the sources listed above.

C.3.2 Toxicity Criteria for Dermal Exposure

RfDs and CSFs found in the literature are frequently expressed as administered doses; therefore, these values are considered to be inappropriate for estimating the risks associated with dermal routes of exposure since dermal exposures are calculated as absorbed intakes or doses. Oral dose-response parameters based on administered doses must be adjusted to absorbed doses before the comparison to estimated dermal exposure intakes is made.

The adjustment from administered to absorbed dose will be made using chemical-specific absorption efficiencies published in available guidance (i.e., USEPA 2004 [the primary reference]; IRIS; Agency for Toxic Substances and Disease Registry (ATSDR) toxicological profiles, etc.) and the following equations:

$$RfD_{dermal} = (RfD_{oral})(ABS_{GI})$$

$$CSF_{dermal} = (CSF_{oral}) / (ABS_{GI})$$

where: ABS_{GI} = absorption efficiency in the gastrointestinal tract
RfD_{dermal} = reference dose for the dermal route of exposure
RfD_{oral} = reference dose for the oral route of exposure
CSF_{dermal} = cancer slope factor for the dermal route of exposure
CSF_{oral} = cancer slope factor of the oral route of exposure

C.3.3 Toxicity Criteria for Carcinogenic Effects of PAHs

Limited toxicity values are available to evaluate the carcinogenic effects from exposure to polynuclear aromatic hydrocarbons (PAHs). USEPA Region IV has adopted a Toxicity Equivalence Factor (TEF) approach to evaluate potentially carcinogenic PAHs. These TEFs are based on the relative potency of the other potentially carcinogenic PAHs to the potency of benzo(a)pyrene, as presented in current USEPA guidance (USEPA, 1993c). TEFs for the individual carcinogenic PAHs are as follows:

Compound	TEF
Benzo(a)anthracene	0.1
Benzo(a)pyrene	1
Benzo(b)fluoranthene	0.1
Benzo(k)fluoranthene	0.01
Chrysene	0.001
Dibenzo(a,h)anthracene	1
Indeno(1,2,3-cd)pyrene	0.1

The TEFs are used to convert each individual carcinogenic PAH concentration into an equivalent concentration of benzo(a)pyrene. The individual equivalent benzo(a)pyrene concentrations are summed to produce a total benzo(a)pyrene equivalent concentration, which is used along with the toxicity criteria for benzo(a)pyrene to evaluate carcinogenic PAHs in the HHRA.

USEPA's Guidelines for Carcinogen Risk Assessment (USEPA, 2005b) and Supplemental Guidance of Assessing Susceptibility from Early-Life Exposure to Carcinogens (USEPA, 2005a) specifies the use of ADAFs for carcinogens that act via a mutagenic mode of action. Carcinogenic PAHs are included in the group of chemicals that have been determined to act via the mutagenic mode of action. No chemical-specific ADAFs have been derived for carcinogenic PAHs, therefore the following default ADAFs will be used: 10 for ages 0 to 2, 3 for ages 2 to 16, and 1 (no adjustment) for ages 16 to 70. The ADAFs will be used in evaluating exposures to carcinogenic PAHs for adolescent trespasser, and hypothetical residents.

C.3.4 Toxicity Criteria for Chromium

Toxicity criteria are available for different forms of chromium (trivalent and hexavalent), which is considered to be more toxic in the hexavalent state. Based on site history, hexavalent chromium is not anticipated to be present in significant quantities at Site 27. Therefore, environmental samples collected at Site 27 will be analyzed for total chromium only, not hexavalent chromium. However, risks will be conservatively calculated assuming that all of the reported total chromium in soils and groundwater was present in the hexavalent state.

C.4 Risk Characterization Protocol

Potential risks (noncarcinogenic and carcinogenic) for human receptors resulting from the potential exposures outlined in the exposure assessment are quantitatively determined during the risk characterization component of the baseline HHRA. The quantitative estimates of risk are calculated in accordance with the risk assessment methods outlined in USEPA Guidance (USEPA, 1989a).

C.4.1 Quantitative Analysis of Chemicals Other Than Lead

Quantitative estimates of risk for chemicals other than lead will be calculated according to risk assessment methods outlined in USEPA guidance (USEPA, 1989a). Lifetime cancer risks are expressed in the form of dimensionless probabilities referred to as incremental lifetime cancer risks (ILCRs), based on CSFs and IURs. Noncarcinogenic risk estimates are presented in the form of hazard quotients (HQs) that are determined through a comparison of intakes and exposure concentrations with published RfDs and RfCs.

ILCR estimates for ingestion and dermal exposures are generated for each COPC using estimated exposure intakes and published CSFs, as follows:

$$ILCR = (Estimated\ Exposure\ Intake)(CSF)$$

If the above equation results in an ILCR greater than 0.01, the following equation is used:

$$ILCR = 1-[exp(-Estimated\ Exposure\ Intake)(CSF)]$$

ILCRs estimates for inhalation exposures are generated for each COPC using estimated exposure concentrations and published IURs, as

$$ILCR = (IUR)(Exposure\ Concentration)(1000\ \mu g/mg)$$

An ILCR of 1×10^{-6} indicates that the exposed receptor has an one-in-one-million chance of developing cancer under the defined exposure scenario. Alternatively, such a risk may be interpreted as representing one additional case of cancer in an exposed population of one million persons.

As mentioned previously, noncarcinogenic risks will be assessed using the concept of HQs and hazard indices (HIs). The HQ for a COPC is the ratio of the estimated intake or exposure concentration to the RfD or RfC, and is calculated for ingestion and dermal exposures as follows:

$$HQ = (Estimated\ Exposure\ Intake)/(RfD)$$

For inhalation exposures, HQ is calculated as follows:

$$HQ = (Exposure\ Concentration) / (RfC)$$

An HI will be generated by summing the individual HQs for all COPCs. The HI is not a mathematical prediction of the severity of toxic effects and therefore is not a true "risk"; it is simply a numerical indicator of the possibility that intakes or exposure concentrations exceed noncarcinogenic (threshold) levels.

C.4.2 Interpretation of Risk Assessment Results

To interpret the quantitative risk estimates and to aid risk managers in determining the need for remediation, quantitative risk estimates will be compared to typical USEPA risk benchmarks. The USEPA has defined a “target cancer risk” range of 1×10^{-4} to 1×10^{-6} (i.e., a one-in-ten-thousand to one-in-one-million chance of developing cancer). HQs and HIs are typically evaluated using a value of 1.0. Generally, adverse noncarcinogenic health effects are not anticipated if an HQ or HI, developed

on a target organ/effect-specific basis, does not exceed 1.0. Current USEPA policy regarding lead exposures is to limit the childhood risk of exceeding a 10 ug/dL blood-lead level to 5 percent.

As a general guideline, remediation (e.g., institutional controls) will be recommended when the cancer risk estimates or total HIs (developed on a target organ/target effects basis) for critical receptors of concern exceed 1×10^{-4} or 1, respectively, or the USEPA risk benchmarks for risks associated with lead exposure are exceeded. However, as indicated in RAGS Part D, the upper limit of the acceptable cancer risk range is not a discrete limit at exactly 1×10^{-4}. Risks slightly greater than 1×10^{-4} may be considered to be acceptable (i.e., protective) if justified based on site-specific conditions, including any uncertainties about the nature and extent of contamination and associated risks. Risk management decisions will be made on a case by case basis when the cancer risk estimates are within the 1×10^{-4} to 1×10^{-6} cancer risk range. No remediation, beyond the potential long-term monitoring that may be required by the State, will be recommended when the cancer risk estimates are less than 1×10^{-6}. The following factors will also be considered in the evaluation of the risk assessment results:

- The magnitude of the media-specific risk estimates.
- Significant uncertainties in the baseline HHRA that would tend to overestimate baseline risk assessment results.
- Significant uncertainties in the EPC estimates that would tend to overestimate baseline risk assessment results.

C.5 Human Health Risk Uncertainty Analysis

The baseline risk assessment will include an uncertainty analysis that qualitatively addresses major sources of uncertainty in the data evaluation, exposure assessment, toxicity assessment, and risk characterization. Probabilistic risk assessment techniques may be recommended to provide risk managers with a more comprehensive understanding of the uncertainty associated with the quantitative risk assessment results. The following subsections present an overview of uncertainties that may be addressed in a site-specific risk assessment uncertainty section.

C.5.1 Uncertainty in Data Evaluation

This section may discuss uncertainties in the risk assessment associated with the analytical data and data quality. This may also involve a discussion of uncertainty in the COPC selection process, the inclusion or exclusion of COPCs in the risk assessment on the basis of background concentrations, the uncertainty in COPC screening levels, uncertainty associated with non-detected results that exceed the screening criteria, and the omission of constituents for which health criteria are not available. The discussion presented will be based, in part, on the evaluation presented in the “Data Useability Worksheet” as suggested in USEPA RAGS, Part D.

C.5.2 Uncertainty in the Exposure Assessment

This section will include a discussion of the following: assumptions related to current and future land use; the uncertainty in exposure point concentrations, for example, the use of maximum concentrations to estimate risks; uncertainty in the selection of potential receptors and exposure scenarios; and uncertainty in the selection of exposure parameters. If predictive models are used in the risk estimation, the uncertainty associated with the model and modeling parameters will be evaluated.

C.5.3 Uncertainty in the Toxicity Assessment

The uncertainties inherent in RfDs and CSFs and use of available criteria will be discussed. A discussion of the uncertainty in hazard assessment, which deals with characterizing the nature and strength of the evidence of causation, or the likelihood that a chemical that induces adverse effects in animals will also induce adverse effects in humans, will be provided. This section will also discuss uncertainty in the dose-response evaluations for the COPCs which relates to the determination of a CSF for the carcinogenic assessment and derivation of an RfD or Reference Concentration (RfC) for the noncarcinogenic assessment. In addition, a discussion of the uncertainty in the toxicity of specific constituents, such as PAHs, arsenic, chromium, aluminum, iron, and copper, will be presented, if applicable.

C.5.4 Uncertainty in the Risk Characterization

This section will discuss the uncertainty in risk characterization which results primarily from assumptions made regarding additivity/synergism of effects from exposure to multiple COPCs affecting different target organs across various exposure routes. The risk assessment will discuss the uncertainty inherent in summing risks for several substances across different exposure pathways. It should be noted that probabilistic risk assessment techniques may also be recommended to further define the uncertainty attached to the risk characterization results. However, the exposure assumptions (e.g., probability distributions) used to prepare the probabilistic risk assessment will be reviewed with the regulatory reviewers before they are incorporated into the uncertainty section of the baseline risk assessment.

C.6 Development of Risk-Based Remedial Goal Options

The HHRA will include a section that outlines the remedial goal options (RGOs) for chemicals of concern (COCs) identified for each environmental media. COCs are COPCs that significantly contribute to receptor risk estimates that exceed risk management benchmarks (see Section B.4.4); COCs may trigger the need for environmental remediation. RGOs are either media-specific risk-based clean-up levels or potential chemical-specific ARARs. Potential risk-based RGOs representing three cancer risk levels (1×10^{-6}, 1×10^{-5}, and 1×10^{-4}) and three hazard quotient levels (0.1, 1, and 3) will be

presented for the COCs.

ACRONYMS

ADAFs	Age Dependent Adjustment Factors
ATSDR	Agency for Toxic Substances and Disease Registry
bgs	Below ground surface
Cal EPA	California Environmental Protection Agency
CDI	Chronic Daily Intake
CERCLA	Comprehensive Environmental Response, Compensation, and Liability Act
CMS	Corrective Measures Study
COC	Chemical of concern
COPC	Chemical of potential concern
CSF	Cancer slope factor
CSM	Conceptual site model
EPC	Exposure point concentration
EU	Exposure unit
GSL_{Vapor}	Generic screening levels for evaluating the vapor intrusion to indoor air
HEAST	Health Effects Assessment Summary Tables
HHRA	Human Health Risk Assessment
HI	Hazard Index
HQ	Hazard Quotient
IEUBK	Integrated Exposure Uptake Biokinetic
ILCR	Incremental Lifetime Cancer Risk
IRIS	Integrated Risk Information System
IUR	Inhalation Unit Risk
MCRD	Marine Corp Recruit Depot
MCL	Maximum Contaminant Level
MRL	Minimal Risk Level
NCEA	National Center for Environmental Assessment
OERR	Office of Emergency Response and Remedial Response
OPPTS	Office of Prevention, Pesticides, and Toxic Substances
ORNL	Oak Ridge National Laboratory
OSWER	Office of Solid Waste and Emergency Response
PAH	Polynuclear aromatic hydrocarbon
PEF	Particulate emission factor
PPRTV	Provisional Peer Reviewed Toxicity Value
RAGS	Risk Assessment Guidance for Superfund
RCRA	Resource Conservation and Recovery Act

RfC	Reference Concentration
RfD	Reference dose
RFI	RCRA Facility Investigation
RGO	Remedial goal option
RME	Reasonable maximum exposure
RSL	Regional Screening Level
SDWA	Safe Drinking Water Act
SMCL	Secondary Maximum Contaminant Level
SQL	Sample Quantitation Limit
SWMU	Solid Waste Management Unit
SSL	Soil screening level
TEFs	Toxicity Equivalent Factors
TRW	Technical Review Workgroup
TtNUS	Tetra Tech NUS, Inc.
UCL	Upper confidence limit
USEPA	United States Environmental Protection Agency
VDEQ	Virginia Department of Environmental Quality
VF	Volatilization Factor
VOC	Volatile organic compound

REFERENCES

Battelle (Battelle Memorial Institute, Earth Tech, Inc., and Newfields for the Naval Facilities Engineering Command), 2002. Guidance for Environmental Background Analysis, Volume I: Soil. April.

DON (Department of the Navy), 2004. Navy Final Policy on the Use of Background Chemical Levels. Memorandum No. 5090 SER N45C/N4U732212. January.

TtNUS (Tetra Tech NUS, Inc.), 2005. Basewide Background Report, Marine Air Corps Station, Beaufort, South Carolina. October.

USEPA (U.S. Environmental Protection Agency), 1989a. Risk Assessment Guidance for Superfund: Volume I, Human Health Evaluation Manual (Part A). Office of Emergency and Remedial Response, Washington, D.C. EPA 540/1-89/002. December.

USEPA, 1989b. Statistical Analysis of Groundwater Monitoring Data at RCRA Facilities. Washington, D.C. EPA530/SW-89-026.

USEPA, 1992. Guidance and Risk Characterization for Risk Managers and Risk Assessors. Memorandum from F. Henry Habicht, Deputy Administrator, Washington, D.C. February.

USEPA, 1993a. Distribution of Preliminary Review Draft: Superfund's Standard Default Exposure Factors for the Central Tendency and Reasonable Maximum Exposure. Office of Solid Waste and Emergency Response, Washington, D.C. May.

USEPA, 1993b. Statistical Analysis of Groundwater Monitoring Data at RCRA Facilities. Washington, D.C. EPA530/R-93-003.

USEPA, 1993c. Provisional Guidance for Quantitative Risk Assessment for Polycyclic Aromatic Hydrocarbons. Office of Research and Development. Washington, D.C. EPA/600/R-93-089. July.

USEPA, 1994a. Revised Interim Guidance on Establishing Soil Lead Guidance for CERCLA Sites and RCRA Corrective Action Facilities. OSWER Directive 9355.4-12, July 14, 1994.

USEPA, 1994b. Guidance Manual for the Integrated Exposure Uptake Kinetic Model for Lead in Children. EPA/540/R-93-081. Office of Emergency and Remedial Response, Washington, D.C. February.

USEPA, 1996. Soil Screening Guidance: Technical Background Document. Office of Solid Waste and Emergency Response, Washington, D.C. EPA/540/R-95/128. May.

USEPA, 1997a. Exposure Factors Handbook. Office of Health and Environmental Assessment, Washington, D.C. EPA/600/P-95/002Fa. August.

USEPA, 1997b. Health Effects Assessment Summary Tables FY 1997. Office of Solid Waste and Emergency Response, Washington, D.C. July.

USEPA, 1999. Use of the TRW Interim Adult Lead Methodology in Risk Assessment. Memorandum from Pat Van Leewven and Paul White to Mark Maddaloni. April.

USEPA, Region 4, 2000. Supplemental Guidance to RAGS: Region 4 Bulletins, Human Health Risk Assessment Bulletins. EPA Region 4, Originally published November 1995, Website version last updated May 2000: http://www.epa.gov/region04/waste/ots/healtbul.htm

USEPA, 2001. Risk Assessment Guidance for Superfund: Volume 1 - Human Health Evaluation Manual (Part D, Standardized Planning, Reporting, and Review of Superfund Risk Assessments). December 2001.

USEPA, 2002a. Draft Guidance for Evaluating the Vapor Intrusion to Indoor Air Pathway from Groundwater and Soils. Office of Solid Waste and Emergency Response. EPA530-F-02-052. November 2002.

USEPA, 2002b. Guidance for Comparing Background and Chemicals Concentrations in Soil for CERCLA Sites. OSWER 9285.7-41. EPA 540-R-01-003. September.

USEPA, 2002c. Role of Background in the CERCLA Cleanup Program. Office of Solid Waste and Emergency Response and office of Emergency and Remedial Response. OSWER Publication No. 9285.6-07P. April 2002.

USEPA, 2002d. Calculating Upper Confidence Limits for Exposure Point Concentrations at Hazardous Waste Sites. Office of Emergency and Remedial Response. OSWER Publication No. 9285.6-10. December 2002.

USEPA, 2002e. Supplemental Guidance for Developing Soil Screening Levels for Superfund Sites. OSWER 9355.4-24, December.

USEPA, 2003a. Recommendations of the Technical Review Workgroup for Lead for an Interim Approach to Assessing Risks Associated with Adult Exposures to Lead in Soil. December.

USEPA, 2003c. Human Health Toxicity Values in Superfund Risk Assessments. Office of Superfund Remediation and Technology Innovation, OSWER 9285.7-53, Washington, DC, December 5.

USEPA, 2003b. User's Guide for Evaluating Subsurface Vapor Intrusion into Buildings. Office of Emergency and Remedial Response, Washington, DC, June 19.

USEPA, 2004. Risk Assessment Guidance for Superfund, Volume I: Human Health Evaluation Manual, (Part E, Supplemental Guidance for Dermal Risk Assessment). EPA/540/R/99/005, Office of Emergency and Remedial Response, Washington, D.C., July.

USEPA, 2005a. Supplemental Guidance of Assessing Susceptibility from Early-Life Exposure to Carcinogens. EPA/630/R-03/003F. Risk Assessment Forum, Washington, DC. March.

USEPA, 2005b. Guidelines for Carcinogen Risk Assessment. EPA/630/P-03/001B. Risk Assessment Forum, Washington, DC. March.

USEPA, 2009a. Risk Assessment Guidance for Superfund, Volume I: Human Health Evaluation Manual (Part F, Supplemental Guidance for Inhalation Risk Assessment), Final. Office of Superfund Remediation and Technology Innovation, Washington, D.C. 20460 EPA-540-R-070-002, OSWER 9285.7-82, January.

USEPA, 2009b. USEPA Technical Review Workgroup for Lead. Frequently Asked Question (FAQs) on the Adult Lead Model, June.

VDEQ (Virginia Department of Environmental Quality), 2008. Virginia Department of Environmental Quality (VDEQ, online - http://www.deq.state.va.us/vrprisk/homepage.html), August.

TABLE C-1

RECEPTORS AND EXPOSURE ROUTES FOR QUANTITATIVE EVALUATION
SITE 27
MCRD PARRIS ISLAND, SOUTH CAROLINA

Receptors	Exposure Routes
Construction Workers (current/future land use)	• Soil incidental ingestion • Soil dermal contact • Inhalation of air/dust/emissions • Groundwater dermal contact (during excavation) • Groundwater inhalation of volatile organics (during excavation)
Maintenance Worker (current/future land use)	• Soil incidental ingestion • Soil dermal contact • Inhalation of air/dust/emissions
Industrial Worker (current/future land use)	• Soil incidental ingestion • Soil dermal contact • Inhalation of air/dust/emissions • Inhalation of vapors intruding into a building from the groundwater
Adult Visitor (current/future land use)	• Soil incidental ingestion • Soil dermal contact • Inhalation of air/dust/emissions
Hypothetical Residents (Adult/Children) (future land use)	• Soil incidental ingestion • Soil dermal contact • Inhalation of air/dust/emissions • Direct ingestion of groundwater • Groundwater dermal contact (showering/bathing) • Inhalation of volatiles in groundwater (showering/bathing) • Inhalation of vapors intruding into a building from the groundwater

TABLE C-2

SUMMARY OF EXPOSURE INPUT PARAMETERS
SITE 27 - EQUIPMENT PARADE DECK
MCRD PARRIS ISLAND, SOUTH CAROLINA

Exposure Parameter	Construction Worker	Maintenance Worker	Industrial Worker	Adult Visitor	Child Resident	Adult Resident
All Exposures						
C_{soil} (mg/kg)	Maximum or 95% UCL[1]	Maximum or 95% UCL[1]	Maximum or 95% UCL[1]	Maximum or 95% UCL[1]	Maximum or 95% UCL[1]	Maximum or 95% UCL[1]
C_{gw} (µg/L)	Average[2]	Average[2]	Average[2]	Average[2]	Average[2]	Average[2]
ED (years)	1[3]	25[4]	25[4]	25[4]	6[5]	24[5]
BW (kg)	70[6]	70[6]	70[6]	70[6]	15[6]	70[6]
AT_n (days)	365[6]	9,125[6]	9,125[6]	9,125[6]	2,190[6]	8,760[6]
AT_c (days)	25,550[6]	25,550[6]	25,550[6]	25,550[6]	25,550[6]	25,550[6]
Incidental Ingestion/Dermal Contact with Soil						
IR (mg/day)	330[4]	100[4]	100[4]	50[6]	200[6]	100[6]
EF-Soil (days/year)	150[4]	50[7]	250[4]	50[7]	350[5]	350[5]
FI (unitless)	1[4]	1[4]	1[4]	1[4]	1[5]	1[5]
SA (cm^2/day)	3,300[4,8]	3,300[4,8]	3,300[4,8]	3,300[4,8]	2,800[8]	5,700[8]
AF (mg/cm^2)	0.3[4,8]	0.2[4,8]	0.2[4,8]	0.07[8]	0.2[8]	0.07[8]
ABS (unitless)	chemical-specific[8]	chemical-specific[8]	chemical-specific[8]	chemical-specific[8]	chemical-specific[8]	chemical-specific[8]
CF (kg/mg)	1E-06	1E-06	1E-06	1E-06	1E-06	1E-06
Inhalation Fugitive Dust/Volatile Emissions from Surface Soil						
C_{air} (mg/m^3)	calculated[4]	calculated[9]	calculated[9]	calculated[9]	calculated[9]	calculated[9]
ET (hours/day)	8[10]	8[10]	8[10]	1[10]	24[6]	24[6]
EF-Soil (days/year)	150[4]	50[7]	250[4]	50[7]	350[5]	350[5]
PEF (m^3/kg)	1.27E+06[4]	9.63E+09[11]	9.63E+09[11]	9.63E+09[11]	9.63E+09[11]	9.63E+09[11]
Ingestion/Dermal Contact with Groundwater						
IR_{gw} (L/day)	NA	NA	NA	NA	1.0[5]	2.0[5]
EF (days/year)	30[3]	NA	NA	NA	350[5]	350[5]
t_{event} (hours/event)	4[3]	NA	NA	NA	1[8]	0.58[8]
EV (events/day)	1[8]	NA	NA	NA	1[8]	1[8]
A (cm^2/day)	3,300[4,8]	NA	NA	NA	6,600[8]	18,000[8]
K_p (cm/hour)	chemical-specific[8]	NA	NA	NA	chemical-specific[8]	chemical-specific[8]
t* (hour/event), τ (hour), and B (unitless)	chemical-specific[8]	NA	NA	NA	chemical-specific[8]	chemical-specific[8]
Inhalation of Volatile Emissions from Groundwater						
C_{air} (mg/m^3)	calculated[12]	NA	NA	NA	NA	NA
ET (hours/day)	4[3]	NA	NA	NA	NA	NA

Notes:

A	Skin surface area available for contact	ED	Exposure duration
ABS	Absorption factor	EF	Exposure frequency
AF	Soil-to-skin adherence factor	EV	Event frequency
AT_c	Averaging time for carcinogenic effects	FI	Fraction ingested from contaminated source
AT_n	Averaging time for noncarcinogenic effects	IR	Ingestion rate (soil or groundwater)
B	Bunge Model partitioning coefficient	Kp	Permeability coefficient from water through skin
BW	Body weight	SA	Skin surface area available for contact
CF	Conversion factor	PEF	Particulate emission factor
C_{soil}	Exposure concentration for soil	t	Lag time
C_{gw}	Exposure concentration for groundwater	t*	Time it takes to reach steady-state conditions
C_{air}	Exposure concentration for air	tevent	Duration of event

TABLE C-2

SUMMARY OF EXPOSURE INPUT PARAMETERS
SITE 27 - EQUIPMENT PARADE DECK
MCRD PARRIS ISLAND, SOUTH CAROLINA

1 - USEPA, 2002. Calculating Upper Confidence Limits for Exposure Point Concentrations at Hazardous Waste Sites. OSWER 9285.6-10.
2 - USEPA. 2000. Supplemental Guidance to RAGS: Region 4 Bulletins, Human Health Risk Assessment Bulletins.
3 - Professional judgment, assumes that construction activities take place 150 days over a 1 year period. Exposures to groundwater are assumed to occur for 4 hours a day for 30 days.
4 - USEPA, 2002: Supplemental Guidance for Developing Soil Screening Levels for Superfund Sites. OSWER 9365.4-24.
5 - USEPA, 1991: Human Health Evaluation Manual, Supplemental Guidance: Standard Default Exposure Factors. OSWER Directive 9285.6-03.
6 - USEPA, 1989: Risk Assessment Guidance for Superfund. Vol 1: Human Health Evaluation Manual, Part A.
7 - Assumes one day a week for 50 weeks a year.
8 - USEPA, 2004: Risk Assessment Guidance for Superfund (Part E, Supplemental Guidance for Dermal Risk Assessment) Final. PA/540/R/99/005.
9 - USEPA, 1996: Soil Screening Guidance: Technical Background Document (PEF values site specific).
10 - Assume an 8-hour work shift.
11 - USEPA, 2009: Soil Screening Guidance calculation Internet site at http://risk.lsd.ornl.gov/calc_start.htm. Site-specific values for Charleston, South Carolina.
12 - VDEQ September 2004. Virginia Department of Environmental Quality (VDEQ, online -http://www.deq.state.va.us/brownfieldweb/vrp.html).

FIGURE C-1

CONCEPTUAL SITE MODEL
SITE 27 - EQUIPMENT PARADE DECK
MCRD PARRIS ISLAND, SOUTH CAROLINA

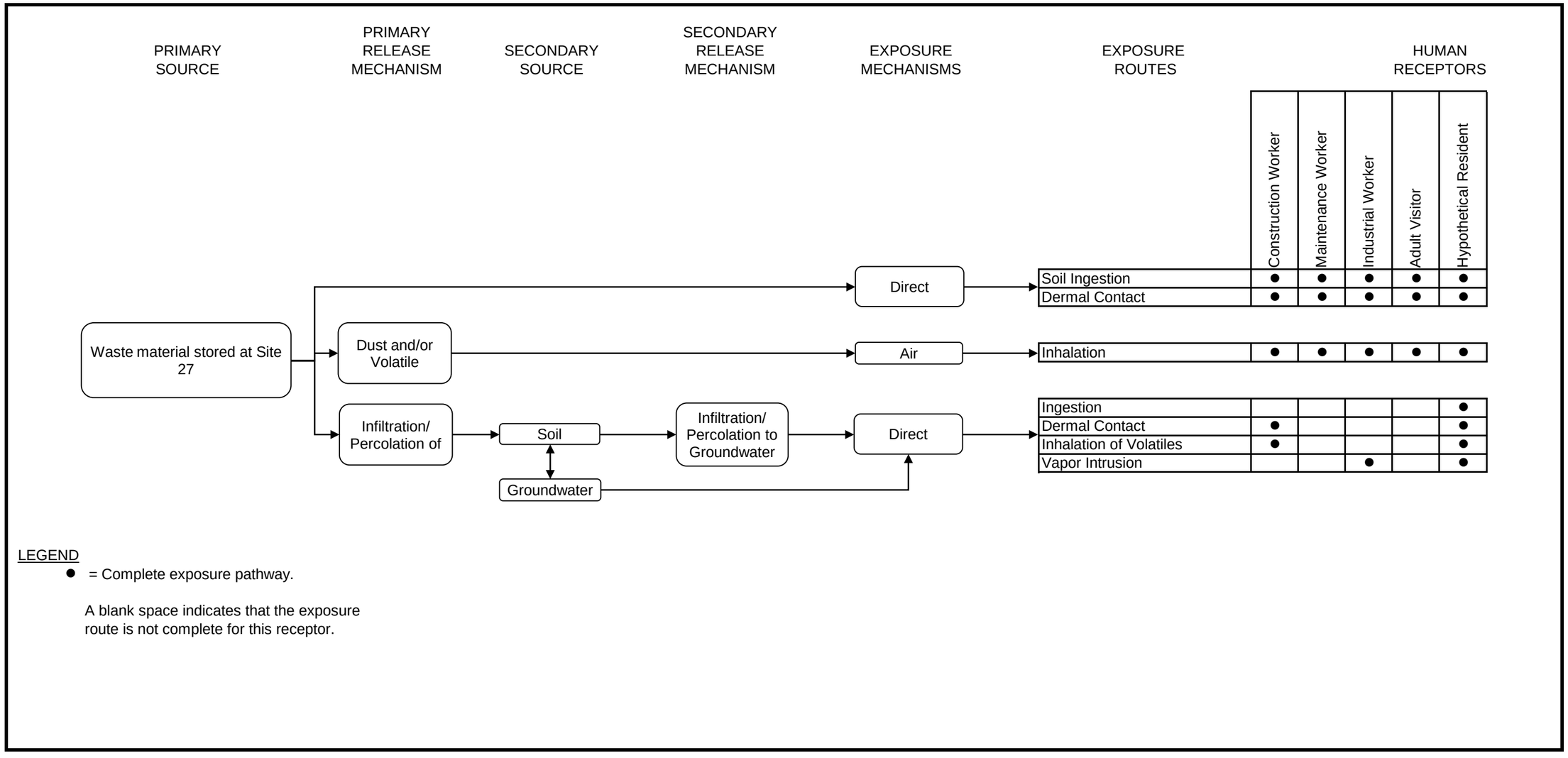

ATTACHMENT A

SAMPLE CALCULATIONS FOR PEFs

CLIENT:	JOB NUMBER:
MCRD PARRIS ISLAND, SOUTH CAROLINA	2046

SUBJECT:
CALCULATION OF PARTICUALATE EMISSION FACTOR FOR CONSTRUCTION WORKERS

BASED ON:
Supplemental Guidance for Developing Soil Screening Levels for Superfund Sites (USEPA, December 2002)

BY:	CHECKED BY:	DATE:
R. JUPIN	LeCiofani	11/17/2009

Equation 5-5
Derivation of the Particulate Emission Factor
Construction Scenario - Construction Worker

$$PEF_{sc} = Q/C_{sr} \times \frac{1}{F_D} \times \left[\frac{T \times A_R}{556 \times (W/3)^{0.4} \times \frac{(365d/yr - p)}{365d/yr} \times \Sigma VKT} \right]$$

Parameter/Definition (units)	Default
PEF_{sc}/subchronic road particulate emission factor (m^3/kg)	site-specific
Q/C_{sr}/ inverse of the ratio of the 1-h geometric mean air concentration to the emission flux along a straight road segment bisecting a square site (g/m^2-s per kg/m^3)	23.02[a] (Equation 5-6)
F_D/dispersion correction factor (unitless)	0.185 (Appendix E)
T/total time over which construction occurs (s)	site-specific
A_R/surface area of contaminated road segment (m^2) L_R/length of road segment (ft) W_R/width of road segment (ft)	274.213 ($A_R = L_R \times W_R \times 0.092903 m^2/ft^2$)
W/mean vehicle weight (tons)	site-specific
p/number of days with at least 0.01 inches of precipitation (days/year)	site-specific (Exhibit 5-2)
ΣVKT/sum of fleet vehicle kilometers traveled during the exposure duration (km)	site-specific

[a] Assumes a 0.5 acre site

Calculation of PEF for Construction Workers

Q/C	23.02	(g/m2-s per kg/m3)	
Fd	0.185	dispersion correction factor (unitless)	
T	4.32E+06	sec ✓	3600 sec/hr x 8 hr/day x 150 days/yr
Area (A)	274.213	m^2	
W	8	tons	
p	110	day/year	
VKT	202.5	km ✓	30 vehicles x 0.045 km/day x 150 days

PEF = 1.27E+06 m^3/kg ✓

CALCULATION WORKSHEET

CLIENT: MCRD PARRIS ISLAND, SOUTH CAROLINA		**JOB NUMBER:** 2046
SUBJECT: CALCULATION OF THE PARTICULATE EMISSION FACTOR (PEF) FOR RESIDENTIAL AND COMMERCIAL/INDUSTRIAL EXPOSURES		
BASED ON: SUPPLEMENTAL GUIDANCE FOR DEVELOPING SOIL SCREENING LEVELS FOR SUPERFUND SITES (USEPA, DECEMBER, 2002)		
BY: R. JUPIN	**CHECKED BY:** L. Ciofani	**DATE:** 11/17/2009

PURPOSE: To calculate the particulate emission factor for residential and commercial/industrial exposure scenarios.

EQUATIONS:

$$PEF = Q/C_{wind} \times \frac{3600 \text{ sec/hr}}{0.036 \times (1 - V) \times (U_m/U_t)^3 \times F(x)}$$

$$Q/C_{wind} = A \times \exp\left[\frac{(\ln A_{site} - B)^2}{C}\right]$$

Where:

PEF	=	particulate emission factor (m^3/kg)
Q/C_{wind}	=	Inverse of mean conc. at center of source (g/m^2-s per kg/m^3).
V	=	fraction of vegetative cover (unitless)
U_m	=	mean annual windspeed (m/sec)
U_t	=	equivalent threshold value of windspeed at 7m (m/sec)
F(x)	=	function dependent on Um/Ut derived using Cowherd et al. (1985) (unitless)
A,B,C	=	constants based on air dispersion modeling for specific climate zones
A_{site}	=	areal extent of the site or contamination (acres)

ASSUMPTIONS:

V	=	0.5	unitless	
U_m	=	3.89	m/sec	Values are for Chareston, South Carolina
U_t	=	11.32	m/sec	
F(x)	=	0.0391	unitless	
A	=	13.7674	unitless	
B	=	18.0441	unitless	
C	=	204.8689	unitless	
A_{site}	=	0.5	acres	

CALCULATION WORKSHEET

CLIENT: MCRD PARRIS ISLAND, SOUTH CAROLINA		**JOB NUMBER:** 2046
SUBJECT: CALCULATION OF THE PARTICULATE EMISSION FACTOR (PEF) FOR RESIDENTIAL AND COMMERCIAL/INDUSTRIAL EXPOSURES		
BASED ON: SUPPLEMENTAL GUIDANCE FOR DEVELOPING SOIL SCREENING LEVELS FOR SUPERFUND SITES (USEPA, DECEMBER, 2002)		
BY: R. JUPIN	**CHECKED BY:** L Ciofani	**DATE:** 11/17/2009

EXAMPLE CALCULATION FOR Q/C_{wind}

Q/C_{wind} = 13.7674 x exp[(ln(0.5) - 18.0441)^2 / 204.8689]

Q/C_{wind} = 76.40181 g/m2-s per kg/m3 ✓

EXAMPLE CALCULATION FOR PEF

$$PEF = 76.40181 \times \frac{3600}{0.036 \times (1 - 0.5) \times (3.89/11.32)^3 \times 0.0391}$$

PEF = 9.63E+09 m^3/kg ✓

APPENDIX D

FIELD STANDARD OPERATING PROCEDURES

CT-04	SAMPLE NOMENCLATURE
CT-05	DATABASE RECORDS AND QUALITY ASSURANCE
GH-1.2	EVALUATION OF EXISTING MONITORING WELLS AND WATER LEVEL MEASUREMENTS
GH-2.8	GROUNDWATER MONITORING WELL INSTALLATION
SA-1.1	GROUNDWATER SAMPLE ACQUISITION AND ONSTIE WATER QUALITY TESTING
SA-1.3	SOIL SAMPLING
SA-2.5	DIRECT PUSH TECHNOLOGY (GEOPROBE/HYDROPUNCH)
SA-6.1	NON-RADIOLOGICAL SAMPLE HANDLING
SA-6.3	FIELD DOCUMENTATION
SA-7.1	DECONTAMINATION OF FIELD EQUIPMENT

TETRA TECH NUS, INC.	STANDARD OPERATING PROCEDURES	Number CT-04	Page 1 of 7
		Effective Date 03/09/09	Revision 2
		Applicability Tetra Tech NUS, Inc.	
		Prepared Earth Sciences Department	
Subject SAMPLE NOMENCLATURE		Approved Tom Johnston	

TABLE OF CONTENTS

SECTION **PAGE**

1.0 PURPOSE **2**

2.0 SCOPE **2**

3.0 GLOSSARY **2**

4.0 RESPONSIBILITIES AND PERSONNEL QUALIFICATIONS **2**

5.0 PROCEDURES **3**

5.1 INTRODUCTION 3
5.2 SAMPLE IDENTIFICATION FIELD REQUIREMENTS 3
5.3 EXAMPLE SAMPLE FIELD DESIGNATIONS 4
5.4 EXAMPLES OF SAMPLE NOMENCLATURE 5
5.5 FIELD QA/QC SAMPLE NOMENCLATURE 6
5.6 EXAMPLES OF FIELD QA/QC SAMPLE NOMENCLATURE 6

6.0 DEVIATIONS **7**

1.0 PURPOSE

The purpose of this Standard Operating Procedure (SOP) is to specify a consistent sample nomenclature system that will facilitate subsequent data management in a cost-effective manner. The sample nomenclature system has been devised such that the following objectives can be attained:

- Sorting of data by matrix
- Sorting of data by depth
- Maintenance of consistency (field, laboratory, and database sample numbers)
- Accommodation of all project-specific requirements
- Accommodation of laboratory sample number length constraints (maximum of 20 characters)

2.0 SCOPE

The methods described in this SOP shall be used consistently for all projects requiring electronic data. Other contract- or project-specific sample nomenclature requirements may also be applicable.

3.0 GLOSSARY

None.

4.0 RESPONSIBILITIES AND PERSONNEL QUALIFICATIONS

Program Manager - It shall be the responsibility of the Project Manager (or designee) to inform contract-specific Project Managers (PMs) of the existence and requirements of this SOP.

Project Manager - It shall be the responsibility of the PM to determine the applicability of this SOP based on: (1) program-specific requirements and (2) project size and objectives. It shall be the responsibility of the PM (or designee) to ensure that sample nomenclature requirements are thoroughly specified in the relevant project planning document (e.g., sampling and analysis plan) and are consistent with this SOP if relevant. It shall be the responsibility of the PM to ensure that the FOL is familiar with the sample nomenclature system.

Field Operations Leader (FOL) - It shall be the responsibility of the FOL to ensure that all field technicians or sampling personnel are thoroughly familiar with this SOP and the project-specific sample nomenclature system. It shall be the responsibility of the FOL to ensure that the sample nomenclature system is used during all project-specific sampling efforts.

General personnel qualifications for sample nomenclature activities in the field include the following:

- Occupational Safety and Health Administration (OSHA) 40-hour and applicable refresher training.
- Capability of performing field work under the expected physical and environmental (i.e., weather) conditions.
- Familiarity with appropriate procedures for field documentation, handling, packaging, and shipping.

5.0 PROCEDURES

5.1 INTRODUCTION

The sample identification (ID) system can consist of as few as eight but not more than 20 distinct alpha-numeric characters. The sample ID will be provided to the laboratory on the sample labels and chain-of-custody forms. The basic sample ID provided to the laboratory has three segments and shall be as follows, where "A" indicates "alpha," and "N" indicates "numeric":

A or N 3 or 4 Characters	AAA 2 or 3 Characters	A or N 3 to 6 Characters
Site Identifier	Sample Type	Sample Location

Additional segments may be added as needed. For example:

(1) Soil and sediment sample ID

A or N 3 or 4 Characters	AAA 2 or 3 Characters	A or N 3 to 6 Characters	NNNN 4 Characters
Site identifier	Sample type	Sample location	Sample depth

(2) Aqueous (groundwater or surface water) sample ID

A or N 3 or 4 Characters	AAA 2 or 3 Characters	A or N 3 to 6 Characters	NN 2 Characters	-A 1 Character
Site identifier	Sample type	Sample location	Round number	Filtered sample only

(3) Biota sample ID

A or N 3 or 4 Characters	AAA 2 or 3 Characters	A or N 3 to 6 Characters	AA 2 Characters	NNN 3 Characters
Site identifier	Sample type	Sample location	Species identifier	Sample group number

5.2 SAMPLE IDENTIFICATION FIELD REQUIREMENTS

The various fields in the sample ID include but are not limited to the following:

- Site identifier
- Sample type
- Sample location
- Sample depth
- Sampling round number
- Filtered
- Species identifier
- Sample group number

The site identifier must be a three- or four-character field (numeric characters, alpha characters, or a mixture of alpha and numeric characters may be used). A site number is necessary because many facilities/sites have multiple individual sites, Solid Waste Management Units (SWMUs), Operable Units (OUs), etc. Several examples are presented in Section 5.3 of this SOP.

The sample type must be a two- or three-character alpha field. Suggested codes are provided in Section 5.3 of this SOP.

The sample location must be at least a three-character field but may have up to six characters (alpha, numeric, or a mixture). The six characters may be useful in identifying a monitoring well to be sampled or describing a grid location.

The sample depth field is used to note the depth below ground surface (bgs) at which a soil or sediment sample is collected. The first two numbers of the four-number code specify the top interval, and the third and fourth specify the bottom interval in feet bgs of the sample. If the sample depth is equal to or greater than 100, then only the top interval would be represented and the sampling depth would be truncated to three characters. The depths will be noted in whole numbers only; further detail, if needed, will be recorded on the sample log sheet or boring log, in the logbook, etc.

A two-digit round number will be used to track the number of aqueous samples collected from a particular aqueous sample location. The first sample collected from a location will be assigned the round identifier 01, the second 02, etc. This applies to both existing and proposed monitoring wells and surface water locations.

Aqueous samples that are field filtered (dissolved analysis) will be identified with an "-F" in the last field segment. No entry in this segment signifies an unfiltered (total) sample.

The species identifier must be a two-character alpha field. Several suggested codes are provided in Section 5.3 of this SOP.

The three-digit sample group number will be used to track the number of biota sample groups (a particular group size may be determined by sample technique, media type, the number of individual caught, weight issues, time, etc.) by species and location. The first sample group of a particular species collected from a given location will be assigned the sample group number 001, and the second sample group of the same species collected from the same location will be assigned the sample group number 002.

5.3 EXAMPLE SAMPLE FIELD DESIGNATIONS

Examples of each of the fields are as follows:

Site identifier - Examples of site numbers/designations are as follows:

A01 - Area of Concern (AOC) 1
125 - SWMU 125
000 - Base- or facility-wide sample (e.g., upgradient well)
BBG - Base background

The examples cited are only suggestions. Each PM (or designee) must designate appropriate (and consistent) site designations for their individual project.

Sample type - Examples of sample types are as follows:

AH - Ash Sample

AS - Air Sample
BM - Building Material Sample
BSB - Biota Sample Full Body
BSF - Biota Sample Fillet
CP - Composite Sample
CS - Chip Sample
DS - Drum Sample
DU - Dust Sample
FP - Free Product
IDW - Investigation-Derived Waste Sample
LT - Leachate Sample
MW - Monitoring Well Groundwater Sample
OF - Outfall Sample
RW - Residential Well Sample
SB - Soil Boring Sample
SD - Sediment Sample
SC - Scrape Sample
SG - Soil Gas Sample
SL - Sludge Sample
SP - Seep Sample
SS - Surface Soil Sample
ST - Storm Sewer Water Sample
SW - Surface Water Sample
TP - Test Pit Sample
TW - Temporary Well Sample
WC - Well Construction Material Sample
WP - Wipe Sample
WS - Waste/Solid Sample
WW - Wastewater Sample

Sample location - Examples of the location field are as follows:

001 - Monitoring well 1
N32E92 - Grid location 32 North and 92 East
D096 - Investigation-derived waste drum number 96

Species identifier - Examples of species identifier are as follows:

BC - Blue Crab
GB - Blue Gill
CO - Corn
SB - Soybean

5.4 EXAMPLES OF SAMPLE NOMENCLATURE

The first round monitoring well groundwater sample collected from existing monitoring well 001 at SWMU 16 for a filtered sample would be designated as 016MW00101-F.

The second round monitoring well groundwater sample collected from existing monitoring well C20P2 at Site 23 for an unfiltered sample would be designated as 023MWC20P202.

The second surface water sample collected from point 01 at SWMU 130 for an unfiltered sample would be designated as 130SW00102.

A surface soil sample collected from grid location 32 North and 92 East at Site 32 at the 0- to 2-foot interval would be designated as 032SSN32E920002.

A subsurface soil sample from soil boring 03 at SWMU 32 at an interval of 4 to 5 feet bgs would be designated as 032SB0030405.

A sediment sample collected at SWMU 19 from 0 to 6 inches at location 14 would be designated as 019SD0140001. The sample data sheet would reflect the precise depth at which this sample was collected.

During biota sampling for full-body analysis, the first time a minnow trap was checked at grid location A25 of SWMU 1415, three small blue gills were captured, collected, and designated with the sample ID of 1415BSBA25BG001. The second time blue gill were collected at the same location (grid location A25 at SWMU 1415), the sample ID would be 1415BSBA25BG002.

Note: No dash (-) or spacing is used between the segments with the exception of the filtered segment. The "F" used for a filtered aqueous sample is preceded by a dash (-F).

5.5 FIELD QA/QC SAMPLE NOMENCLATURE

Field Quality Assurance (QA)/Quality Control (QC) samples are designated using a different coding system. The QC code will consist of a three- to four-segment alpha-numeric code that identifies the sample QC type, the date the sample was collected, and the number of this type of QC sample collected on that date.

AA	NNNNNN	NN	-F
QC type	Date	Sequence number (per day)	Filtered (aqueous only, if needed)

The QC types are identified as:

TB = Trip Blank
RB = Rinsate Blank (Equipment Blank)
FD = Field Duplicate
AB = Ambient Conditions Blank
WB = Source Water Blank

The sampling time recorded on the chain-of-custody form, labels, and tags for duplicate samples will be 0000 so that the samples are "blind" to the laboratory. Notes detailing the sample number, time, date, and type will be recorded on the routine sample log sheets and will document the location of the duplicate sample (sample log sheets are not provided to the laboratory). Documentation for all other QC types (TB, RB, AB, and WB) will be recorded on the QC Sample Log Sheet (see SOP SA-6.3, Field Documentation).

5.6 EXAMPLES OF FIELD QA/QC SAMPLE NOMENCLATURE

The first duplicate of the day for a filtered groundwater sample collected on June 3, 2000, would be designated as FD06030001-F.

The third duplicate of the day taken of a subsurface soil sample collected on November 17, 2003, would be designated as FD11170303.

The first trip blank associated with samples collected on October 12, 2000, would be designated as TB10120001.

The only rinsate blank collected on November 17, 2001, would be designated as RB11170101.

6.0 DEVIATIONS

Any deviation from this SOP must be addressed in detail in the site-specific planning documents.

TABLE OF CONTENTS

SECTION **PAGE**

1.0 PURPOSE **2**

2.0 SCOPE **2**

3.0 GLOSSARY **2**

4.0 RESPONSIBILITIES **2**

5.0 PROCEDURES **4**

5.1 INTRODUCTION 4
5.2 FILE ESTABLISHMENT 4
5.3 ELECTRONIC DELIVERABLES 4
5.4 SAMPLE TRACKING FORMS 5
5.5 CHAIN-OF-CUSTODY FORMS 5
5.6 DATA VALIDATION LETTERS 5
5.7 HISTORICAL DATA 5

6.0 RECORDS **6**

ATTACHMENTS

A MIS REQUEST FORM **7**

1.0 PURPOSE

The purpose of this document is to specify a consistent procedure for the quality assurance review of electronic and hard copy databases. This SOP outlines the requirements for establishment of a Database Record File, Quality Assurance review procedures, and documentation of the Quality Assurance Review Process.

2.0 SCOPE

The methods described in this Standard Operating Procedure (SOP) shall be used consistently for all projects managed by Tetra Tech NUS (TtNUS).

3.0 GLOSSARY

Chain-of-Custody Form - A Chain-of-Custody Form is a printed form that accompanies a sample or a group of samples from the time of sample collection to the laboratory. The Chain-of-Custody Form is retained with the samples during transfer of samples from one custodian to another. The Chain-of-Custody Form is a controlled document that becomes part of the permanent project file. Chain-of-Custody and field documentation requirements are addressed in SOP SA-6.1.

Electronic Database - A database provided on a compact laser disk (CD). Such electronic databases will generally be prepared using public domain software such as DBase, RBase, Oracle, Visual FoxPro, Microsoft Access, Paradox, etc.

Hardcopy Database - A printed copy of a database prepared using the software discussed under the definition of an electronic database.

Form I - A printed copy of the analytical results for each sample.

Sample Tracking Summary - A printed record of sample information including the date the samples were collected, the number of samples collected, the sample matrix, the laboratory to which the samples were shipped, the associated analytical requirements for the samples, the date the analytical data were received from the laboratory, and the date that validation of the sample data was completed.

4.0 RESPONSIBILITIES

Database Records Custodian - It shall be the responsibility of the Database Records Custodian to update and file the Sample Tracking Summaries for all active projects on a weekly basis. It shall be the responsibility of the Database Records Custodian to ensure that the most recent copies of the Sample Tracking Summaries are placed in the Database Records file. It shall be the responsibility of the Database Records Custodian to ensure that a copy of all validation deliverables is provided to the Project Manager (for placement in the project file). It shall be the responsibility of the Database Records Custodian to ensure that photocopies of all validation deliverables and historical data and reports (as applicable) are placed in the Database Records file.

Data Validation Coordinator - It shall be the responsibility of the Data Validation Coordinator (or designee) to ensure that the Sample Tracking Summaries are maintained by the Database Records Custodian. It shall be the responsibility of the Data Validation Coordinator (or designee) to ensure that photocopies of all data validation deliverables are placed in the applicable Database Records file by the Database Records Custodian.

Earth Sciences Department Manager - It shall be the responsibility of the Earth Sciences Department Manager (or equivalent) to ensure that all field personnel are familiar with the requirements of this Standard Operating Procedure (specifically Section 5.5).

FOL - It shall be the responsibility of the FOL (FOL) of each project to ensure that all field technicians or sampling personnel are thoroughly familiar with this SOP, specifically regarding provision of the Chain-of-Custody Forms to the Database Records Custodian. Other responsibilities of the FOL are described in Sections 5.4 and 5.5.

Management Information Systems (MIS) Manager - It shall be the responsibility of the MIS Manager to ensure that copies of original electronic deliverables (CDs) are placed in both the project files and the Database Records File. It shall be the responsibility of the MIS Manager (or designee) to verify the completeness of the database (presence of all samples) in both electronic and hardcopy form in the Database Records File. It shall be the responsibility of the MIS Manager to ensure that Quality Assurance Reviews are completed and are attested to by Quality Assurance Reviewers. It shall be the responsibility of the MIS Manager to ensure that records of the Quality Assurance review process are placed in the Database Records File. It shall be the responsibility of the MIS Manager to ensure that both electronic and hardcopy forms of the final database are placed in both the project and the Database Record File. It shall be the responsibility of the MIS Manager to ensure that data validation qualifiers are entered in the database.

Furthermore, it shall be the responsibility of the MIS Manager to participate in project planning at the request of the Project Manager, specifically with respect to the generation of level of effort and schedule estimates. To support the project planning effort, the MIS Manager shall provide a copy of the MIS Request From included as Attachment A to the project manager. It shall be the responsibility of the MIS Manager to generate level of effort and budget estimates at the time database support is requested if a budget does not exist at the time of the request. The MIS Request Form shall be provided to the Project Manager at the time of any such requests. It shall be the responsibility of the MIS Manager to notify the Project Manager of any anticipated level of effort overruns or schedule noncompliances as soon as such problems arise along with full justification for any deviations from the budget estimates (provided they were generated by the MIS Manager). It shall be the responsibility of the MIS Manager to document any changes to the scope of work dictated by the Project Manager, along with an estimate of the impact of the change on the level of effort and the schedule.

Program/Department Managers - It shall be the responsibility of the Department and/or Program Managers (or designees) to inform their respective department's Project Managers of the existence and requirements of this SOP.

Project Manager - It shall be the responsibility of each Project Manager to determine the applicability of this SOP based on: (1) program-specific requirements, and (2) project size and objectives. It shall be the responsibility of the Project Manager (or designee) to ensure that the FOL is familiar with the requirements regarding Chain-of-Custody Form provision to the Database Records Custodian. It shall be the responsibility of the Project Manager (or designee) to determine which, if any, historical data are relevant and to ensure that such data (including all relevant information such as originating entity, sample locations, sampling dates, etc.) are provided to the Database Records Custodian for inclusion in the Database Records File. It shall be the responsibility of the Project Manager to obtain project planning input regarding the level of effort and schedule from the MIS Manager. It shall be the responsibility of the Project Manager to complete the database checklist (Attachment A) to support the level of effort and schedule estimate and to facilitate database preparation and subroutine execution.

Risk Assessment Department Manager - It shall be the responsibility of the Risk Assessment Department Manager to monitor compliance with this Standard Operating Procedure, to modify this SOP as necessary, and to take corrective action if necessary. Monitoring of the process shall be completed on a quarterly basis.

Quality Assurance Reviewers - It shall be the responsibility of the Quality Assurance Reviewers to verify the completeness of the sample results via review of the Chain-of-Custody Forms and Sample Tracking Summaries. It shall be the responsibility of the Quality Assurance Reviewers to ensure the correctness of the database via direct comparison of the hardcopy printout of the database and the hardcopy summaries of the original analytical data (e.g., Form Is provided in data validation deliverables). Correctness includes the presence of all relevant sample information (all sample information fields), agreement of the laboratory and database analytical results, and the presence of data validation qualifiers.

Quality Manager - It shall be the responsibility of the Quality Manager to monitor compliance with this Standard Operating Procedure via routine audits.

5.0 PROCEDURES

5.1 Introduction

Verification of the accuracy and completeness of an electronic database can only be accomplished via comparison of a hardcopy of the database with hardcopy of all relevant sample information. The primary purposes of this SOP are to ensure that 1) all necessary hardcopy information is readily available to Quality Assurance Reviewers; 2) ensure that the Quality Assurance review is completed in a consistent and comprehensive manner, and; 3) ensure that documentation of the Quality Assurance review process is maintained in the project file.

5.2 File Establishment

A Database Record file shall be established for a specific project at the discretion of the Project Manager. Initiation of the filing procedure will commence upon receipt of the first set of Chain-of-Custody documents from a FOL or sampling technician. The Database Record Custodian shall establish a project-specific file for placement in the Database Record File. Each file in the Database Record File shall consist of standard components placed in the file as the project progresses. Each file shall be clearly labeled with the project number, which shall be placed on the front of the file drawer and on each and every hanging file folder relevant to the project. The following constitute the minimum components of a completed file:

- Electronic Deliverables
- Sample Tracking Forms
- Chain-of-Custody Forms
- Data Validation Letters
- Quality Assurance Records

5.3 Electronic Deliverables

The format of electronic deliverables shall be specified in the laboratory procurement specification and shall be provided by the laboratory. The integrity of all original electronic data deliverables shall be maintained. This shall be accomplished via the generation of copies of each electronic deliverable provided by the laboratory. The original electronic deliverable shall be provided to the project manager for inclusion in the project file. A copy of the original electronic deliverable shall be placed in the Database Record File. The second copy shall be maintained by the MIS Manager (or designee) to be used as a working copy.

5.4 Sample Tracking Forms

Updated versions of the sample tracking form for each relevant project shall be maintained by the Database Record Custodian. The Sample Tracking Forms shall be updated any time additional Chain-of-Custody Forms are received from a FOL or sampling technician, or at any time that data are received from a laboratory, or at any time that validation of a given data package (sample delivery group) is completed. The Data Validation Coordinator shall inform the Database Record Custodian of the receipt of any data packages from the laboratory and of completion of validation of a given data package to facilitate updating of the Sample Tracking Form. The Database Record Custodian shall place a revised copy of the Sample Tracking Form in the Database Record File anytime it has been updated. Copies of the updated Sample Tracking Form shall also be provided to the project manager to apprise the project manager of sample package receipt, completion of validation, etc.

5.5 Chain-of-Custody Forms

The Chain-of-Custody Forms for all sampling efforts will be used as the basis for (1) updating the Sample Tracking Form, and (2) confirming that all required samples and associated analyses have been completed. It shall be the responsibility of the FOL (or sample technician) to provide a photocopy of all Chain-of-Custody Forms to the Database Record Custodian immediately upon completion of a sampling effort. The Database Record Custodian shall then place the copies of the Chain-of-Custody Form(s) in the Database Record File. Upon receipt of a sample data package from an analytical laboratory, the Data Validation Coordinator shall provide a copy of the laboratory Chain-of-Custody Form to the Database Record Custodian. The Database Record Custodian shall use this copy to update the Sample Tracking Summary and shall place the copy of the laboratory-provided Chain-of-Custody Form in the Database Record File. The photocopy of the laboratory-provided Chain-of Custody Form shall be stapled to the previously filed field copy. Upon receipt of all analytical data, two copies of the Chain-of-Custody will therefore be in the file. Review of the Chain-of-Custody Forms will therefore be a simple mechanism to determine if all data have been received. Chain-of-Custody is addressed in SOP SA-6.1.

5.6 Data Validation Letters

All data validation deliverables (or raw data summaries if validation is not conducted) shall be provided for inclusion in both the Database Record File and the project file. If USEPA regional- or client-specific requirements are such that Form Is (or similar analytical results) need not be provided with the validation deliverable, copies of such results must be appended to the deliverable. It is preferable, although not essential that the validation qualifiers be hand-written directly on the data summary forms. The data validation deliverables (and attendant analytical summaries) will provide the basis for direct comparison of the database printout and the raw data and qualifiers.

5.7 Historical Data

At the direction of the Project Manager, historical data may also be included in a project-specific analytical database. In the event that historical data are germane to the project, hardcopy of the historical data must be included in the Database Record File. Historical data may be maintained in the form of final reports or as raw data. The information contained in the historical data file must be sufficient to identify its origin, its collection date, the sample location, the matrix, and any and all other pertinent information. All available analytical data, Chain-of-Custody Forms, boring logs, well construction logs, sample location maps, shall be photocopied by the Project Manager (or designee) and placed in one or more 3-ring binders. All information shall be organized chronologically by matrix. It shall be the responsibility of the Project Manager (or designee) to ensure that all inconsistencies between analytical data, Chain-of-Custody Forms, boring logs, sample log sheets, and field logbooks are identified and corrected. The Project Manager (or designee) shall decide which nomenclature is appropriate and edit, initial and date all relevant forms. Data entry may only be performed on information that has undergone the aforementioned

editing process, thereby having a direct correlation between hardcopy information and what will become the electronic database.

6.0 RECORDS

Records regarding database preparation and quality assurance review include all those identified in the previous section. Upon completion of the database task, records from the file will be forwarded to the Project Manager for inclusion in the project file, or will be placed in bankers boxes (or equivalent) for storage. The final records for storage shall include the following minimum information on placards placed on both the top and end of the storage box:

Database Record File
PROJECT NUMBER: ____
SITE NAME: _____
DATE FILED: __/__/__
SUMMARY OF CONTENTS ENCLOSED
BOX _ OF _

Project- or program-specific record keeping requirements shall take precedence over the record keeping requirements of this SOP.

ATTACHMENT A

MIS REQUEST FORM

Tetra Tech NUS, Inc.

Project Name:
CTO:
Project Manager:
Requestor:
Program/Client:
State/EPA Region:

Request Date:
Date Data Available for Production:
Request in Support of:
Database Lead:
GIS Lead:
Statistics Lead:
Risk Lead:

Site Name(s) (Area, OU, etc.):
Sampling Date(s):
Matrix: ☐ GW ☐ SO ☐ SD ☐ SW ☐ Other:

Labels: ☐ Labels needed for an upcoming sampling event _____ Total # of Samples
_____ Estimated Hours
_____ Due Date
_____ Complete ETS Charge No.
_____ FOL
Additional Instructions:

Data Entry:
☐ Chemical data needs to be entered from hardcopy _____ Estimated # of Samples
☐ Chemical data needs to be formated electronically
☐ Field analytical data needs to be entered from hardcopy
☐ Geologic data needs to be entered from hardcopy
☐ Hydrology data needs to be entered from hardcopy
_____ Estimated Hours
_____ Due Date
_____ Complete ETS Charge No.
Additional Instructions:

Tables:
☐ Full Data Printout
☐ Summary of Positive Hits
☐ Occurance and Distribution ☐ with criteria
☐ Sampling Analytical Summary
☐ Other:
_____ Estimated Hours
_____ Due Date
_____ Complete ETS Charge No.
Additional Instructions:

GIS:
☐ General Facility Location
☐ Site Location
☐ Potentiometric Contours/Groundwater Flow
☐ Sample Location Proposed
☐ Sample Location Existing
☐ Tag Map Single Round
☐ Tag Map Multiple Round
☐ Isoconcentrations
☐ Chart Map
☐ 3D Visualization
☐ EGIS CD
☐ Other:
_____ Estimated Hours
_____ Due Date
_____ Complete ETS Charge No.
Additional Instructions:

Statistics: ☐ Yes
_____ Estimated Hours
_____ Due Date
_____ Complete ETS Charge No.
Additional Instructions:

Geostatistics: ☐ Yes
_____ Estimated Hours
_____ Due Date
_____ Complete ETS Charge No.
Additional Instructions:

TETRA TECH NUS, INC.	STANDARD OPERATING PROCEDURES	Number GH-1.2	Page 1 of 9
		Effective Date 09/03	Revision 2
		Applicability Tetra Tech NUS, Inc.	
		Prepared Earth Sciences Department	
Subject EVALUATION OF EXISTING MONITORING WELLS AND WATER LEVEL MEASUREMENT		Approved D. Senovich	

TABLE OF CONTENTS

SECTION **PAGE**

1.0 PURPOSE 2

2.0 SCOPE 2

3.0 GLOSSARY 2

4.0 RESPONSIBILITIES 2

5.0 PROCEDURES 2

~~5.1 PRELIMINARY EVALUATION ..... 3~~
~~5.2 FIELD INSPECTION ..... 3~~
5.3 WATER LEVEL (HYDRAULIC HEAD) MEASUREMENTS 4
5.3.1 General 4
5.3.2 Water Level Measuring Techniques 5
5.3.3 Methods 5
5.3.4 Water Level Measuring Devices 6
5.3.5 Data Recording 6
5.3.6 Specific Quality Control Procedures for Water Level Measuring Devices 7
5.4 EQUIPMENT DECONTAMINATION 7
5.5 HEALTH AND SAFETY CONSIDERATIONS 7

6.0 RECORDS 7

ATTACHMENTS

~~A MONITOIRNG WELL INSPECTON SHEET ..... 8~~
B GROUNDWATER LEVEL MEASUREMENT SHEET 9

1.0 PURPOSE

The purpose of this procedure is to provide reference information regarding the proper methods for evaluating the physical condition and project utility of existing monitoring wells and determining water levels.

2.0 SCOPE

The procedures described herein are applicable to all existing monitoring wells and, for the most part, are independent of construction materials and methods.

3.0 GLOSSARY

Hydraulic Head - The height to which water will rise in a well.

Water Table - A surface in an unconfined aquifer where groundwater pressure is equal to atmospheric pressure (i.e., the pressure head is zero).

4.0 RESPONSIBILITIES

Site Geologist/Hydrogeologist - Has overall responsibility for the evaluation of existing wells, obtaining water level measurements and developing groundwater contour maps. The site geologist/hydrogeologist (in concurrence with the Project Manager) shall specify the reference point from which water levels are measured (usually a specific point on the upper edge of the inner well casing), the number and location of data points which shall be used for constructing a contour map, and how many complete sets of water levels are required to adequately define groundwater flow directions (e.g., if there are seasonal variations).

Field Personnel - Must have a basic familiarity with the equipment and procedures involved in obtaining water levels and must be aware of any project-specific requirements or objectives.

5.0 PROCEDURES

Accurate, valid and useful groundwater monitoring requires that four important conditions be met:

- Proper characterization of site hydrogeology.
- Proper design of the groundwater monitoring program, including adequate numbers of wells installed at appropriate locations and depths.
- Satisfactory methods of groundwater sampling and analysis to meet the project data quality objectives (DQOs).
- The assurance that specific monitoring well samples are representative of water quality conditions in the monitored interval.

To insure that these conditions are met, adequate descriptions of subsurface geology, well construction methods and well testing results must be available. The following steps will help to insure that the required data are available to permit an evaluation of the utility of existing monitoring wells for collecting additional samples.

5.1 Preliminary Evaluation

A necessary first step in evaluating existing monitoring well data is the study and review of the original work plan for monitoring well installation (if available). This helps to familiarize the site geologist/hydrogeologist with site-specific condition, and will promote an understanding of the original purpose of the monitoring wells.

The next step of the evaluation should involve a review of all available information concerning borehole drilling and well construction. This will allow interpretation of groundwater flow conditions and area geology, and will help to establish consistency between hydraulic properties of the well and physical features of the well or formation. The physical features which should be identified and detailed, if available, include:

- The well identification number, permit number and location by referenced coordinates, the distance from prominent site features, or the location of the well on a map.
- The installation dates, drilling methods, well development methods, past sampling dates, and drilling contractors.
- The depth to bedrock -- where rock cores were not taken, auger refusal, drive casing refusal or penetration test results (blow counts for split-barrel sampling) may be used to estimate bedrock interface.
- The soil profile and stratigraphy.
- The borehole depth and diameter.
- The elevation of the top of the protective casing, the top of the well riser, and the ground surface.
- The total depth of the well.
- The type of well materials, screen type, slot size, and length, and the elevation/depths of the screen, interval, and/or monitored interval.
- The elevation/depths of the tops and bottom of the filter pack and well seals and the type and size.

5.2 Field Inspection

During the onsite inspection of existing monitoring wells, features to be noted include:

- The condition of the protective casing, cap and lock.
- The condition of the cement seal surrounding the protective casing.
- The presence of depressions or standing water around the casing.
- The presence of and condition of dedicated sampling equipment.
- The presence of a survey mark on the inner well casing.

If the protective casing, cap and lock have been damaged or the cement collar appears deteriorated, or if there are any depressions around the well casing capable of holding water, surface water may have infiltrated into the well. This may invalidate previous sampling results unless the time when leakage started can be precisely determined.

The routine physical inspection must be followed by a more detailed investigation to identify other potential routes of contamination or sampling equipment malfunction. Any of these occurrences may invalidate

previously-collected water quality data. If the monitoring well is to be used in the future, considerations shown in the steps described above should be rectified to rehabilitate the well.

After disconnecting any wires, cables or electrical sources, remove the lock and open the cap. Check for the presence of organic vapors with a photoionization detector (PID) or flame-ionization detector (FID) to determine the appropriate worker safety level. The following information should be noted:

- Cap function.
- Physical characteristics and composition of the inner casing or riser, including inner diameter and annular space.
- Presence of grout between the riser and outer protective casing and the existence of drain holes in the protective casing.
- Presence of a riser cap, method of attachment to casing, and venting of the riser.
- Presence of dedicated sampling equipment; if possible, remove such equipment and inspect size, materials of construction and condition.

The final step of the field inspection is to confirm previous hydraulic or physical property data and to obtain data not previously available. This includes the determination of static water levels, total well depth and well obstruction. This may be accomplished using a weighted tape measure which can also be used to check for sediment (the weight will advance slowly if sediment is present, and the presence of sediment on the weight upon removal should be noted). If sediment is present and/or the well has not been sampled in 12 or more months, it should be redeveloped before sampling.

Lastly, as a final step, the location, condition and expected water quality of the wells should be reviewed in light of their usefulness for the intended purpose of the investigation.

See Attachment A, Monitoring Well Inspection Sheet.

5.3 Water Level (Hydraulic Head) Measurements

5.3.1 General

Groundwater level measurements can be made in monitoring wells, private or public water wells, piezometers, open boreholes, or test pits (after stabilization). Groundwater measurements should generally not be made in boreholes with drilling rods or auger flights present. If groundwater sampling activities are to occur, groundwater level measurements shall take place prior to well purging or sampling.

All groundwater level measurements shall be made to the nearest 0.01 foot, and recorded in the site geologist/hydrogeologist's field notebook or on the Groundwater Level Measurement Sheet (Attachment B), along with the date and time of the reading. The total depth of the well shall be measured and recorded, if not already known. Weather changes that occur over the period of time during which water levels are being taken, such as precipitation and barometric pressure changes, should be noted.

In measuring groundwater levels, there shall be a clearly-established reference point of known elevation, which is normally identified by a mark on the upper edge of the inner well casing. To be useful, the reference point should be tied in with an established USGS benchmark or other properly surveyed elevation datum. An arbitrary datum could be used for an isolated group of wells, if necessary.

Cascading water within a borehole or steel well casings can cause false readings with some types of sounding devices (chalked line, electrical). Oil layers may also cause problems in determining the true water level in a well. Special devices (interface probes) are available for measuring the thickness of oil layers and true depth to groundwater, if required.

Water level readings shall be taken regularly, as required by the site geologist/hydrogeologist. Monitoring wells or open-cased boreholes that are subject to tidal fluctuations should be read in conjunction with a tidal chart (or preferably in conjunction with readings of a tide staff or tide level recorder installed in the adjacent water body); the frequency of such readings shall be established by the site hydrogeologist. All water level measurements at a site used to develop a groundwater contour map shall be made in the shortest practical time to minimize affects due to weather changes.

5.3.2 Water Level Measuring Techniques

There are several methods for determining standing or changing water levels in boreholes and monitoring wells. Certain methods have particular advantages and disadvantages depending upon well conditions. A general description of these methods is presented, along with a listing of various advantages and disadvantages of each technique. An effective technique shall be selected for the particular site conditions by the site geologist/hydrogeologist.

In most instances, preparation of accurate potentiometric surface maps require that static water level measurements be obtained to a precision of 0.01 feet. To obtain such measurements in individual accessible wells, electrical water level indicator methods have been found to be best, and thus should be utilized. Other, less precise methods, such as the popper or bell sound, or bailer line methods, should be avoided. When a large number of (or continuous) readings are required, time-consuming individual readings are not usually feasible. In such cases, it is best to use a pressure transducer.

5.3.3 Methods

Water levels can be measured by several different techniques, but the same steps shall be followed in each case. The proper sequence is as follows:

1. Check operation of recording equipment above ground. Prior to opening the well, don personal protective equipment, as required. Never remove an air-tight lock (such as a J-plug) with your face over the well. Pressure changes within the well may explosively force the cap off once loosened.

2. Record all information specified below in the geologist/hydrogeologist's field notebook or on the Groundwater Level Measurement Sheet (Attachment B):

   - Well number.
   - Water level (to the nearest 0.01 foot). Water levels shall be taken from the surveyed reference mark on the top edge of the inner well casing. If the J-plug was on the well very tightly, it may take several minutes for the water level to stabilize.
   - Time and day of the measurement.
   - Thickness of free product if present.

Water level measuring devices with permanently marked intervals shall be used. The devices shall be free of kinks or folds which will affect the ability of the equipment to hang straight in the well pipe.

5.3.4 Water Level Measuring Devices

Electric Water Level Indicators

These are the most commonly used devices and consist of a spool of small-diameter cable and a weighted probe attached to the end. When the probe comes in contact with the water, an electrical circuit is closed and a meter, light, and/or buzzer attached to the spool will signal the contact.

There are a number of commercial electric sounders available, none of which is entirely reliable under all conditions likely to occur in a contaminated monitoring well. In conditions where there is oil on the water, groundwater with high specific conductance, water cascading into the well, steel well casing, or a turbulent water surface in the well, measuring with an electric sounder may be difficult.

For accurate readings, the probe shall be lowered slowly into the well adjacent to the survey mark on the inner well casing. The electric tape is read (to the nearest 0.01 ft.) at the measuring point and recorded where contact with the water surface was indicated.

~~**Popper or Bell Sounder**~~

~~A bell- or cup-shaped weight that is hollow on the bottom is attached to a measuring tape and lowered into the well. A "plopping" or "popping" sound is made when the weight strikes the surface of the water. An accurate reading can be determined by lifting and lowering the weight in short strokes, and reading the tape when the weight strikes the water. This method is not sufficiently accurate to obtain water levels to 0.01 feet, and thus is more appropriate for obtaining only approximate water levels quickly.~~

Pressure Transducer

Pressure transducers can be lowered into a well or borehole to measure the pressure of water and therefore the water elevation above the transducer. The transducer is wired into a recorder at the surface to record changes in water level with time. The recorder digitizes the information and can provide a printout or transfer the information to a computer for evaluation (using a well drawdown/recovery model). The pressure transducer should be initially calibrated with another water level measurement technique to ensure accuracy. This technique is very useful for hydraulic conductivity testing in highly permeable material where repeated, accurate water level measurements are required in a very short period of time. A sensitive transducer element is required to measure water levels to 0.01 foot accuracy.

Borehole Geophysics

Approximate water levels can be determined during geophysical logging of the borehole (although this is not the primary purpose for geophysical logging and such logging is not cost effective if used only for this purpose). Several logging techniques will indicate water level. Commonly-used logs which will indicate saturated/unsaturated conditions include the spontaneous potential (SP) log and the neutron log.

5.3.5 Data Recording

Water level measurements, time, data, and weather conditions shall be recorded in the geologist/hydrogeologist's field notebook or on the Groundwater Level Measurement Sheet. All water level measurements shall be measured from a known reference point. The reference point is generally a marked point on the upper edge of the inner well casing that has been surveyed for an elevation. The exact reference point shall be marked with permanent ink on the casing since the top of the casing may not be entirely level. It is important to note changes in weather conditions because changes in the barometric pressure may affect the water level within the well.

5.3.6 Specific Quality Control Procedures for Water Level Measuring Devices

All groundwater level measurement devices must be cleaned before and after each use to prevent cross contamination of wells. Manufacturer's instructions for cleaning the device shall be strictly followed. Some devices used to measure groundwater levels may need to be calibrated. These devices shall be calibrated to 0.01 foot accuracy and any adjustments/corrections shall be recorded in the field logbook/notebook. After the corrections/adjustments are made to the measuring device and entered in the field logbook/notebook, the corrected readings shall be entered onto the Groundwater Level Measurement Sheet (Attachment B). Elevations will be entered on the sheet when they become available.

5.4 Equipment Decontamination

Equipment used for water level measurements provide a mechanism for potentially cross contaminating wells. Therefore, all portions of a device which project down the well casing must be decontaminated prior to advancing to the next well. Decontamination procedures vary based on the project objectives but must be defined prior to conducting any field activities including the collection of water level data. Consult the project planning documents and SA-7.1 Decontamination of Field Equipment.

5.5 Health and Safety Considerations

Groundwater contaminated by volatile organic compounds may release toxic vapors into the air space inside the well pipe. The release of this air when the well is initially opened is a health/safety hazard which must be considered. Initial monitoring of the well headspace and breathing zone concentrations using a PID or FID shall be performed to determine required levels of protection. Under certain conditions, air-tight well caps may explosively fly off the well when the pressure is relieved. Never stand directly over a well when uncapping it.

6.0 RECORDS

A record of all field procedures, tests and observations must be recorded in the site logbook or designated field notebook. Entries in the log/notebook should include the individuals participating in the field effort, and the date and time. The use of annotated sketches may help to supplement the evaluation.

ATTACHMENT A
MONITORING WELL INSPECTION SHEET

Monitoring Well Inspection Sheet

Project Name: _____ Date: _____

Location: _____ Time: _____

Tidally Influenced: Y / N Personnel: _____

Field Measurements				
Well ID	PID Reading PPM	Depth to Water *	Total Depth *	Flush Mt./ Stick-up

Well Construction Details (Taken from construction logs)		
Total Depth *	Ground Elev.	Top/Btm Screen *

Check List:

Riser Pipe Material:
Riser Notched for Surveyors:
Well ID Tag In-place:
Well security:
Photo taken:

Condition of Well:

Protective Case:
Riser:
Well Pad:
Other:

Presence/Evidence of:

Standing Water Around Well:
Existing Sampling Equipment:
Sediment build-up in Well Btm:

Comments:

** = Measurements are from the top of the inner case to the nearest 0.01'*

ATTACHMENT B
GROUNDWATER LEVEL MESUREMENT SHEET

Tetra Tech NUS, Inc.

GROUNDWATER LEVEL MEASUREMENT SHEET

Project Name: _____ **Project No.:** _____
Location: _____ **Personnel:** _____
Weather Conditions: _____ **Measuring Device:** _____
Tidally Influenced: Yes ___ No ___ **Remarks:** _____

Well or Piezometer Number	Date	Time	Elevation of Reference Point (feet)*	Water Level Indicator Reading (feet)*	Thickness of Free Product (feet)*	Comments

* All measurements to the nearest 0.01 foot, from surveyed mark (unless noted)

Page ____ of ____

TABLE OF CONTENTS

SECTION **PAGE**

1.0 PURPOSE **2**

2.0 SCOPE **2**

3.0 GLOSSARY **2**

4.0 RESPONSIBILITIES **2**

5.0 PROCEDURES **3**

5.1 EQUIPMENT/ITEMS NEEDED 3
5.2 WELL DESIGN 3
5.2.1 Well Depth, Diameter, and Monitored Interval 3
5.2.2 Riser Pipe and Screen Materials 5
5.2.3 Annular Materials 6
5.2.4 Protective Casing 6
5.3 MONITORING WELL INSTALLATION 7
5.3.1 Monitoring Wells in Unconsolidated Sediments 7
5.3.2 Confining Layer Monitoring Wells 7
5.3.3 Bedrock Monitoring Wells 8
5.3.4 Drive Points 8
5.3.5 Innovative Monitoring Well Installation Techniques 8
5.4 WELL DEVELOPMENT METHODS 8
5.4.1 Overpumping and Backwashing 8
5.4.2 Surging with a Surge Plunger 9
5.4.3 Compressed Air 9
5.4.4 High Velocity Jetting 9

6.0 RECORDS **9**

7.0 REFERENCES **10**

ATTACHMENTS

A RELATIVE COMPATIBILITY OF RIGID WELL-CASING MATERIAL (PERCENT) / RELATIVE COMPATIBILITY OF SEMI-RIGID OR ELASTOMERIC MATERIALS (PERCENT) 11
B COMPARISON OF STAINLESS STEEL AND PVC FOR MONITORING WELL CONSTRUCTION 12

1.0 PURPOSE

This procedure provides general guidance and information pertaining to proper monitoring well design, installation, and development.

2.0 SCOPE

This procedure is applicable to the construction of monitoring wells. The methods described herein may be modified by project-specific requirements for monitoring well construction. In addition, many regulatory agencies have specific regulations pertaining to monitoring well construction and permitting. These requirements must be determined during the project planning phases of the investigation, and any required permits must be obtained before field work begins. Innovative monitoring well installation techniques, which typically are not used, will be discussed only generally in this procedure.

3.0 GLOSSARY

Monitoring Well - A well which is screened, cased, and sealed which is capable of providing a groundwater level and groundwater sample representative of the zone being monitored. Some monitoring wells may be constructed as open boreholes.

Piezometer - A pipe or tube inserted into the water bearing zone, typically open to water flow at the bottom and to the atmosphere at the top, and used to measure water level elevations. Piezometers may range in size from 1/2-inch-diameter plastic tubes to well points or monitoring wells.

Potentiometric Surface - The surface representative of the level to which water will rise in a well cased to the screened aquifer.

Well Point (Drive Point) - A screened or perforated tube (Typically 1-1/4 or 2 inches in diameter) with a solid, conical, hardened point at one end, which is attached to a riser pipe and driven into the ground with a sledge hammer, drop weight, or mechanical vibrator. Well points may be used for groundwater injection and recovery, as piezometers (i.e., to measure water levels) or to provide groundwater samples for water quality data.

4.0 RESPONSIBILITIES

Driller - The driller provides adequate and operable equipment, sufficient quantities of materials, and an experienced and efficient labor force capable of performing all phases of proper monitoring well installation and construction. The driller may also be responsible for obtaining, in advance, any required permits for monitoring well installation and construction.

Field Geologist - The field geologist supervises and documents well installation and construction performed by the driller, and insures that well construction is adequate to provide representative groundwater data from the monitored interval. Geotechnical engineers, field technicians, or other suitable trained personnel may also serve in this capacity.

5.0 PROCEDURES

5.1 Equipment/Items Needed

Below is a list of items that may be needed when installing a monitoring well or piezometer:

- Health and safety equipment (hard hats, safety glasses, etc.) as required by the Site Safety Officer.
- Well drilling and installation equipment with associated materials (typically supplied by the driller).
- Hydrogeologic equipment (weighted engineer's tape, water level indicator, retractable engineers rule, electronic calculator, clipboard, mirror and flashlight - for observing downhole activities, paint and ink marker for marking monitoring wells, sample jars, well installation forms, and a field notebook).
- Drive point installation tools (sledge hammer, drop hammer, or mechanical vibrator; tripod, pipe wrenches, drive points, riser pipe, and end caps).

5.2 Well Design

The objectives and intended use for each monitoring well must be clearly defined before the monitoring system is designed. Within the monitoring system, different monitoring wells may serve different purposes and, therefore, require different types of construction. During all phases of the well design, attention must be given to clearly documenting the basis for design decisions, the details of well construction, and the materials used. The objectives for installing the monitoring wells may include:

- Determining groundwater flow directions and velocities.
- Sampling or monitoring for trace contaminants.
- Determining aquifer characteristics (e.g., hydraulic conductivity).

Siting of monitoring wells shall be performed after a preliminary estimation of the groundwater flow direction. In most cases, groundwater flow directions and potential well locations can be determined by an experienced hydrogeologist through the review of geologic data and the site terrain. In addition, data from production wells or other monitoring wells in the area may be used to determine the groundwater flow direction. If these methods cannot be used, piezometers, which are relatively inexpensive to install, may have to be installed in a preliminary investigative phase to determine groundwater flow direction.

5.2.1 Well Depth, Diameter, and Monitored Interval

The well depth, diameter, and monitored interval must be tailored to the specific monitoring needs of each investigation. Specification of these items generally depends on the purpose of the monitoring system and the characteristics of the hydrogeologic system being monitored. Wells of different depth, diameter, and monitored interval can be employed in the same groundwater monitoring system. For instance, varying the monitored interval in several wells, at the same location (cluster wells) can help to determine the vertical gradient and the depths at which contaminants are present. Conversely, a fully penetrating well is usually not used to quantify or vertically locate a contaminant plume, since groundwater samples collected in wells that are screened over the full thickness of the water-bearing zone will be representative of average conditions across the entire monitored interval. However, fully penetrating wells can be used to establish the existence of contamination in the water-bearing zone. The well diameter desired depends upon the hydraulic characteristics of the water-bearing zone, sampling requirements, drilling method and cost.

The decision concerning the monitored interval and well depth is based on the following (and possibly other) information:

- The vertical location of the contaminant source in relation to the water-bearing zone.
- The depth, thickness and uniformity of the water-bearing zone.
- The anticipated depth, thickness, and characteristics (e.g., density relative to water) of the contaminant plume.
- Fluctuation in groundwater levels (due to pumping, tidal influences, or natural recharge/discharge events).
- The presence and location of contaminants encountered during drilling.
- Whether the purpose of the installation is for determining existence or non-existence of contamination or if a particular stratigraphic zone is being investigated.
- The analysis of borehole geophysical logs.

In most situations where groundwater flow lines are horizontal, depending on the purpose of the well and the site conditions, monitored intervals are 20 feet or less. Shorter screen lengths (5 feet or less) are usually required where flow lines are not horizontal, (i.e., if the wells are to be used for accurate measurement of the potentiometric head at a specific point).

Many factors influence the diameter of a monitoring well. The diameter of the monitoring well depends on the application. In determining well diameter, the following needs must be considered:

- Adequate water volume for sampling.
- Drilling methodology.
- Type of sampling device to be used.
- Costs.

Standard monitoring well diameters are 2, 4, 6, or 8 inches. Drive points are typically 1-1/4 or 2 inches in diameter. For monitoring programs which require screened monitoring wells, either a 2-inch or 4-inch-diameter well is preferred. Typically, well diameters greater than 4 inches are used in monitoring programs in which open-hole bedrock monitoring wells are used. With smaller diameter wells, the volume of stagnant water in the well is minimized, and well construction costs are reduced; however, the sampling devices that can be used are limited.

In specifying well diameter, sampling requirements must be considered (up to a total of 4 gallons of water may be required for a single sample to account for full organic and inorganic analyses, and split samples), particularly if the monitored formation is known to be a low-yielding formation. The unit volume of water contained within a monitoring well is dependent on the well diameter as follows:

Casing Inside Diameter (Inch)	Standing Water Length to Obtain 1 Gallon Water (Feet)
2	6.13
4	1.53
6	0.68

If a well recharges quickly after purging, then well diameter may not be an important factor regarding sample volume requirements.

Pumping tests for determining aquifer characteristics may require larger diameter wells (for installation of high capacity pumps); however, in small-diameter wells in-situ permeability tests can be performed during drilling or after well installation is completed.

5.2.2 Riser Pipe and Screen Materials

Well materials are specified by diameter, type of material, and thickness of pipe. Well screens require an additional specification of slot size. Thickness of pipe is referred to as "Schedule" for polyvinyl chloride (PVC) casing and is usually Schedule 40 (thinner wall) or 80 (thicker wall). Steel pipe thickness is often referred to as "Strength". Standard Strength is usually adequate for monitoring well purposes. With larger diameter pipe, the wall thickness must be greater to maintain adequate strength. The required thickness is also dependent on the method of installation; risers for drive points require greater strength than wells installed inside drilled borings.

The selection of well screen and riser materials depends on the method of drilling, the type of subsurface materials the well penetrates, the type of contamination expected, and natural water quality and depth. Cost and the level of accuracy required are also important. The materials generally available are Teflon, stainless steel, PVC galvanized steel, and carbon steel. Each has advantages and limitations (see Attachment A of this guideline for an extensive presentation on this topic). The two most commonly used materials are PVC and stainless steel. Properties of these two materials are compared in Attachment B. Stainless steel is a good choice where trace metals or organic sampling is required; however, costs are high. Teflon materials are extremely expensive, but are relatively inert and provide the least opportunity for water contamination due to well materials. PVC has many advantages, including low cost, excellent availability, light weight, ease of manipulation, and widespread acceptance. The crushing strength of PVC may limit the depth of installation, but the use of Schedule 80 materials may overcome some of the problems associated with depth. However, the smaller inside diameter of Schedule 80 pipe may be an important factor when considering the size of bailers or pumps required for sampling or testing. Due to this problem, the minimum well pipe size recommended for Schedule 80 wells is 4-inch I.D.

Screens and risers may have to be decontaminated before use because oil-based preservatives and oil used during thread cutting and screen manufacturing may contaminate samples. Metal pipe may corrode and release metal ions or chemically react with organic constituents, but this is considered a minor issue. Galvanized steel is not recommended where samples may be collected for metals analyses, as zinc and cadmium levels in groundwater samples may become elevated from leaching of the zinc coating.

Threaded, flush-joint casing is most often preferred for monitoring well applications. PVC, Teflon, and steel can all be obtained with threaded joints. Welded-joint steel casing is also acceptable. Glued PVC may release organic contaminants into the well, and therefore, should not be used if the well is to be sampled for organic constituents.

When the water-bearing zone is in consolidated bedrock, such as limestone or fractured granite, a well screen is often not necessary (the well is simply an open hole in bedrock). Unconsolidated materials, such as sands, clay, and silts require a screen. A screen slot size of 0.010 or 0.020 inch is generally used when a screen is necessary, and the annular borehole space around the screened interval is artificially packed with an appropriately sized sand, selected based on formation grain size. The slot size controls the quantity of water entering the well and prevents entry of natural materials or sand pack. The screen shall pass no more than 10 percent of the pack material, or in-situ aquifer material. The site geologist shall specify the combination of screen slot size and sand pack which will be compatible with the water-bearing zone, to maximize groundwater inflow and minimize head losses and movement of fines into the wells. For example, as a standard procedure, a Morie No. 1 or No. 10 to No. 20 U.S. Standard Sieve size filter pack is typically appropriate for a 0.020-inch slot screen; however, a No. 20 to No. 40 U.S. Standard Sieve size filter pack is typically appropriate for a 0.010-inch slot screen.

5.2.3 Annular Materials

Materials placed in the annular space between the borehole and riser pipe and screen include a sand pack when necessary, a bentonite seal, and cement-bentonite grout. The sand pack is usually a medium- to coarse-grained poorly graded, silica sand and should relate to the grain size of the aquifer sediments. The quantity of sand placed in the annular space is dependent upon the length of the screened interval, but should always extend at least 1 foot above the top of the screen. At least 1 to 3 feet of bentonite pellets or equivalent shall be placed above the sand pack. Cement-bentonite grout (or equivalent) is then placed to extent from the top of the bentonite pellets to the ground surface.

On occasion, and with the concurrence of the involved regulatory agencies, monitoring wells may be packed naturally (i.e., no artificial sand pack installed). In this case, the natural formation material is allowed to collapse around the well screen after the well is installed. This method has been used where the formation material itself is a relatively uniform grain size, or when artificial sand packing is not possible due to borehole collapse.

Bentonite expands by absorbing water and provides a seal between the screened interval and the overlying portion of the annular space and formation. Cement-bentonite grout is placed on top of the bentonite pellets, extending to the surface. The grout effectively seals the remaining borehole annulus and eliminates the possibility for surface infiltration reaching the screened interval. Grouting also replaces material removed during drilling and prevents hole collapse and subsidence around the well. A tremie pipe should be used to introduce grout from the bottom upward, to prevent bridging, and to provide a better seal. In shallow boreholes that don't collapse, it may be more practical to pour the grout from the surface without a tremie pipe.

Grout is a general term which has several different connotations. For all practical purposes within the monitoring well installation industry, grout refers to the solidified material which is installed and occupies the annular space above the bentonite pellet seal. Grout, most of the time, is made up of one or two assemblages of material, (e.g., cement and/or bentonite). A cement-bentonite grout, which is the most common type of grout used in monitoring well completions, normally is a mixture of cement, bentonite, and water at a ratio of one 90-pound bag of Portland Type I cement, plus 3 to 5 pounds of granular or flake-type bentonite, and 6-7 gallons of water. A neat cement consists of one ninety-pound bag of Portland Type I cement and 6-7 gallons of water. A bentonite slurry (bentonite and water mixed to a thick but pumpable mixture) is sometimes used instead of grout for deep well installations where placement of bentonite pellets is difficult. Bentonite chips are also occasionally used for annular backfill in place of grout.

In certain cases, the borehole may be drilled to a depth greater than the anticipated well installation depth. For these cases, the well shall be backfilled to the desired depth with bentonite pellets/chips or sand. A short (1- to 2-foot) section of capped riser pipe sump is sometimes installed immediately below the screen, as a silt reservoir, when significant post-development silting is anticipated. This will ensure that the entire screen surface remains unobstructed.

5.2.4 Protective Casing

When the well is completed and grouted to the surface, a protective steel casing is typically placed over the top of the well. This casing generally has a hinged cap and can be locked to prevent vandalism. The protective casing has a larger diameter than the well and is set into the wet cement grout over the well upon completion. In addition, one hole is drilled just above the cement collar through the protective casing which acts as a weep hole for the flow of water which may enter the annulus during well development, purging, or sampling.

A protective casing which is level with the ground surface (flush-mounted) is used in roadway or parking lot applications where the top of a monitoring well must be below the pavement. The top of the riser pipe is placed 4 to 5 inches below the pavement, and a locking protective casing is cemented in place to 3 inches below the pavement. A large diameter, manhole-type protective collar is set into the wet cement around the well with the top set level with or slightly above the pavement. An appropriately-sized id is placed over the protective sleeve. The cement should be slightly mounded to direct pooled water away from the well head.

5.3 Monitoring Well Installation

Pertinent data regarding monitoring well installation shall be recorded on log sheets as depicted and discussed in SOP SA-6.3. Attachments to this referenced SOP illustrate terms and physical construction of various types of monitoring wells.

5.3.1 Monitoring Wells in Unconsolidated Sediments

After the borehole is drilled to the desired depth, well installation can begin. The procedure for well installation will partially be dictated by the stability of the formation in which the well is being placed. If the borehole collapses immediately after the drilling tools are withdrawn, then a temporary casing must be installed and well installation will proceed through the center of the temporary casing, and continue as the temporary casing is withdrawn from the borehole. In the case of hollow-stem auger drilling, the augers will act to stabilize the borehole during well installation.

Before the screen and riser pipe are lowered into the borehole, all pipe and screen sections should be measured with an engineer's rule to ensure proper placement. When measuring sections, the threads on one end of the pipe or screen must be excluded while measuring, since the pipe and screen sections are screwed flush together.

After the screen and riser pipe are lowered through the temporary casing, the sand pack can be installed. A weighted tape measure must be used during the installation procedure to carefully monitor installation progress. The sand is slowly poured into the annulus between the riser pipe and temporary casing, as the casing is withdrawn. Sand should always be kept within the temporary casing during withdrawal in order to ensure an adequate sand pack. However, if too much sand is within the temporary casing (greater than 1 foot above the bottom of the casing) bridging between the temporary casing and riser pipe may occur. Centralizers may be used at the geologist's discretion, one above and one below the screen, to assure enough annular space for sand pack placement.

After the sand pack is installed to the desired depth (at least 1 foot above the top of the screen), then the bentonite pellet seal (or equivalent), can be installed in the same manner as the sand pack. At least 1 to 3 feet of bentonite pellets should be installed above the sand pack. Pellets should be added slowly and their fall monitored closely to ensure that bridging does not occur.

The cement-bentonite grout is then mixed and tremied into the annulus as the temporary casing or augers are withdrawn. Finally, the protective casing can be installed as detailed in Section 5.2.4.

5.3.2 Confining Layer Monitoring Wells

When drilling and installing a well in a confined aquifer, proper well installation techniques must be applied to avoid cross contamination between aquifers. Under most conditions, this can be accomplished by installing double-cased wells. This is accomplished by drilling a large-diameter boring through the upper aquifer, 1 to 5 feet into the underlying confining layer, and setting and pressure grouting or tremie grouting a large-diameter casing into the confining layer. The grout material must fill the space between the native material and the outer casing. A smaller diameter boring is then continued through the confining layer for

installation of the monitoring well as detailed for overburden monitoring wells. Sufficient time (determined by the field geologist), must be allowed for setting of the grout prior to drilling through the confined layer.

5.3.3 Bedrock Monitoring Wells

When installing bedrock monitoring wells, a large diameter boring is drilled through the overburden and approximately 5 –10 feet into bedrock. A casing (typically steel) is installed and either pressure grouted or tremie grouted in place. After the grout has cured, a smaller diameter boring is continued into bedrock to the desired depth. If the boring does not collapse, the well can be left open, and a screen is not necessary. If the boring collapses, then a screen is required and can be installed as detailed for overburden monitoring wells. If a screen is to be used, then the casing which is installed through the overburden and into the bedrock does not require grouting and can be removed when the final well installation is completed.

5.3.4 Drive Points

Drive points can be installed with either a sledge hammer, drop hammer, or a mechanical vibrator. The screen section is threaded and tightened onto the riser pipe with pipe wrenches. The drive point is simply pounded into the subsurface to the desired depth. If a heavy drop hammer is used, then a tripod and pulley setup is required to lift the hammer. Drive points typically cannot be manually driven to depths exceeding 10 feet.

Direct push sampling/monitoring point installation methods, using a direct push rig or drilling rig, are described in SOP SA-2.5.

5.3.5 Innovative Monitoring Well Installation Techniques

Certain innovative sampling devices have proven advantageous. These devices are essentially screened samplers installed in a borehole with only small-diameter tubes extending to the surface. This reduces drilling costs, decreases the volume of stagnant water, and provides a sampling system that minimizes cross-contamination from sampling equipment. Four manufacturers of these samplers include Timco Manufacturing Company, Inc., of Prairie du Sac, Wisconsin, BARCAD Systems, Inc., of Concord, Massachusetts, Westbay Instruments Ltd. of Vancouver, British Columbia, Canada and the University of Waterloo at Waterloo, Ontario, Canada.. Each manufacturer offers various construction materials.

5.4 Well Development Methods

The purpose of well development is to stabilize and increase the permeability of the gravel pack around the well screen, and to restore the permeability of the formation which may have been reduced by drilling operations. Wells are typically developed until all fine material and drilling water is removed from the well. Sequential measurements of pH, conductivity, turbidity, and temperature taken during development may yield information (stabilized values) regarding whether sufficient development has been performed. The selection of the well development method shall be made by the field geologist and is based on the drilling methods, well construction and installation details, and the characteristics of the formation that the well is screened in. The primary methods of well development are summarized below. A more detailed discussion may be found in Driscoll (1986).

5.4.1 Overpumping and Backwashing

Wells may be developed by alternatively drawing the water level down at a high rate (by pumping or bailing) and then reversing the flow direction (backwashing) so that water is passing from the well into the formation. This back and forth movement of water through the well screen and gravel pack serves to

remove fines from the formation immediately adjacent to the well, while preventing bridging (wedging) of sand grains. Backwashing can be accomplished by several methods, including pouring water into the well and then bailing, starting and stopping a pump intermittently to change water levels, or forcing water into the well under pressure through a water-tight fitting ("rawhiding"). Care should be taken when backwashing not to apply too much pressure, which could damage or destroy the well screen.

5.4.2 Surging with a Surge Plunger

A surge plunger (also called a surge block) is approximately the same diameter as the well casing and is aggressively moved up and down within the well to agitate the water, causing it to move in and out of the screens. This movement of water pulls fine materials into the well, where they may be removed by any of several methods, and prevents bridging of sand particles in the gravel pack. There are two basic types of surge plungers; solid and valved surge plungers. In formations with low yields, a valved surge plunger may be preferred, as solid plungers tend to force water out of the well at a greater rate than it will flow back in. Valved plungers are designed to produce a greater inflow than outflow of water during surging.

5.4.3 Compressed Air

Compressed air can be used to develop a well by either of two methods: backwashing or surging. Backwashing is done by forcing water out through the screens, using increasing air pressure inside a sealed well, then releasing the pressurized air to allow the water to flow back into the well. Care should be taken when using this method so that the water level does not drop below the top of the screen, thus introducing air into the formation and reducing well yield. Surging, or the "open well" method, consists of alternately releasing large volumes of air suddenly into an open well below the water level to produce a strong surge by virtue of the resistance of water head, friction, and inertia. Pumping of the well is subsequently done using the air lift method.

5.4.4 High Velocity Jetting

In the high velocity jetting method, water is forced at high velocities from a plunger-type device and through the well screen to loosen fine particles from the sand pack and surrounding formation. The jetting tool is slowly rotated and raised and lowered along the length of the well screen to develop the entire screened area. Jetting using a hose lowered into the well may also be effective. The fines washed into the screen during this process can then be bailed or pumped from the well.

6.0 RECORDS

A critical part of monitoring well installation is recording of all significant details and events in the site logbook or field notebook. The geologist must record the exact depths of significant hydrogeological features, screen placement, gravel pack placement, and bentonite placement.

A Monitoring Well Sheet (see Attachments to SOP SA-6.3) shall be completed, ensuring the uniform recording of data for each installation and rapid identification of missing information. Well depth, length, materials of construction, length and openings of screen, length and type of riser, and depth and type of all backfill materials shall be recorded. Additional information shall include location, installation date, problems encountered, water levels before and after well installation, cross-reference to the geologic boring log, and methods used during the installation and development process. Documentation is very important to prevent problems involving questionable sample validity. Somewhat different information will need to be recorded, depending on whether the well is completed in overburden (single- or double-cased), as a cased well in bedrock, or as an open hole in bedrock.

The quantities of sand, bentonite, and grout placed in the well are also important. The geologist shall calculate the annular space volume and have an idea of the quantity of material needed to fill the annular

space. Volumes of backfill significantly higher than the calculated volume may indicate a problem such as a large cavity, while a smaller backfill volume may indicate a cave-in or bridging of the backfill materials. Any problems with rig operation or down-time shall be recorded and may affect the driller's final fee.

7.0 REFERENCES

Scalf, M. R., J. F. McNabb, W. J. Dunlap, R. L. Cosby, and J. Fryberger, 1981. Manual of Groundwater Sampling Procedures. R. S. Kerr Environmental Research Laboratory, Office of Research and Development, U.S. EPA, Ada, Oklahoma.

Barcelona, M. J., P. P. Gibb and R. A. Miller, 1983. A Guide to the selection of Materials for Monitoring Well Construction and Groundwater Sampling. ISWS Contract Report 327, Illinois State Water Survey, Champaign, Illinois.

U.S. EPA, 1980. Procedures Manual for Groundwater Monitoring of Solid Waste Disposal Facilities. Publication SW-611, Office of Solid Waste, U.S. EPA, Washington, D.C.

Driscoll, Fletcher G., 1986. Groundwater and Wells. Johnson Division, St. Paul, Minnesota, 1989.

ATTACHMENT A

RELATIVE COMPATIBILITY OF RIGID WELL CASING MATERIAL (PERCENT)

Potentially-Deteriorating Substance	Type of Casing Material						
	PVC 1	Galvanized Steel	Carbon Steel	Lo-carbon Steel	Stainless Steel 304	Stainless Steel 316	Teflon*
Buffered Weak Acid	100	56	51	59	97	100	100
Weak Acid	98	59	43	47	96	100	100
Mineral Acid/ High Solids Content	100	48	57	60	80	82	100
Aqueous/Organic Mixtures	64	69	73	73	98	100	100
Percent Overall Rating	91	58	56	59	93	96	100

Preliminary Ranking of Rigid Materials:

1 Teflon®
2 Stainless Steel 316
3. Stainless Steel 304
4 PVC 1
5 Lo-Carbon Steel
6 Galvanized Steel
7 Carbon Steel

* Trademark of DuPont

RELATIVE COMPATIBILITY OF SEMI-RIGID OR ELASTOMERIC MATERIALS (PERCENT)

Potentially-Deteriorating Substance	Type of Casing Material								
	PVC Flexible	PP	PE Conv.	PE Linear	PMM	Viton®*	Silicone	Neoprene	Teflon®*
Buffered Weak Acid	97	97	100	97	90	92	87	85	100
Weak Acid	92	90	94	96	78	78	75	75	100
Mineral Acid/ High Solids Content	100	100	100	100	95	100	78	82	100
Aqueous/Organic Mixtures	62	71	40	60	49	78	49	44	100
Percent Overall Rating	88	90	84	88	78	87	72	72	100

Preliminary Ranking of Semi-Rigid or Elastomeric Materials:

1 Teflon®
2 Polypropylene (PP)
3. PVC Flexible/PE Linear
4 Viton®
5 PE Conventional
6 Plexiglas/Lucite (PMM)
7 Silicone/Neoprene

* Trademark of DuPont

Source: Barcelona et al., 1983

ATTACHMENT B

COMPARISON OF STAINLESS STEEL AND PVC FOR MONITORING WELL CONSTRUCTION

Characteristic	Stainless Steel	PVC
Strength	Use in deep wells to prevent compression and closing of screen/riser.	Use when shear and compressive strength are not critical.
Weight	Relatively heavier.	Light-weight; floats in water.
Cost	Relatively expensive.	Relatively inexpensive.
Corrosivity	Deteriorates more rapidly in corrosive water.	Non-corrosive -- may deteriorate in presence of ketones, aromatics, alkyl sulfides, or some chlorinated hydrocarbons.
Ease of Use	Difficult to adjust size or length in the field.	Easy to handle and work with in the field.
Preparation for Use	Should be steam cleaned if organics will be subsequently sampled.	Never use glue fittings -- pipes should be threaded or pressure fitted. Should be steam cleaned when used for monitoring wells.
Interaction with Contaminants*	May sorb organic or inorganic substances when oxidized.	May sorb or release organic substances.

* See also Attachment A.

TETRA TECH	STANDARD OPERATING PROCEDURES	Number SA-1.1	Page 1 of 34
		Effective Date 04/07/2008	Revision 7
		Applicability Tetra Tech NUS, Inc.	
		Prepared Earth Sciences Department	
Subject GROUNDWATER SAMPLE ACQUISITION AND ONSITE WATER QUALITY TESTING		Approved Tom Johnston	

TABLE OF CONTENTS

SECTION **PAGE**

1.0 PURPOSE **2**

2.0 SCOPE **2**

3.0 GLOSSARY **2**

4.0 RESPONSIBILITIES AND PERSONNEL QUALIFICATIONS **3**

5.0 HEALTH AND SAFETY **4**

6.0 PROCEDURES **5**

6.1 General 5
6.2 Sampling, Monitoring, and Evacuation Equipment 7
6.3 Calculations of Well Volume 8
6.4 Evacuation of Static Water – Purging 9
6.4.1 General 9
6.4.2 Evacuation Devices 9
6.5 Onsite Water Quality Testing 12
6.5.1 Measurement of pH 13
6.5.2 Measurement of Specific Conductance 15
6.5.3 Measurement of Temperature 16
6.5.4 Measurement of Dissolved Oxygen 17
6.5.5 Measurement of Oxidation-Reduction Potential 19
6.5.6 Measurement of Salinity 20
6.5.7 Measurement of Turbidity 21
6.6 Sampling 22
6.6.1 Sampling Plan 22
6.6.2 Sampling Methods as Related to Low-Flow Sampling 23
6.7 Low-Flow Purging and Sampling 25
6.7.1 Scope and Application 25
6.7.2 Equipment 25
6.7.3 Purging and Sampling Procedure 26

7.0 REFERENCES **28**

ATTACHMENTS

A PURGING EQUIPMENT SELECTION 29
B GROUNDWATER SAMPLE LOG SHEET 32
C EQUIPMENT CALIBRATION LOG 33
D LOW FLOW PURGE DATA SHEET 34

1.0 PURPOSE

This Standard Operating Procedure (SOP) describes the process to be used for purging groundwater monitoring wells prior to sampling, for collecting groundwater samples, and for measuring groundwater quality parameters.

2.0 SCOPE

This document provides information on proper sampling equipment, onsite water quality testing, safety measures to ensure the safety of the field technician(s), and techniques for groundwater sampling. All personnel are encouraged to review the information contained herein to facilitate planning of the field sampling effort. The techniques described shall be followed whenever applicable, noting that site-specific conditions or project-specific plans may require modifications to methodology.

3.0 GLOSSARY

Conductivity – Conductivity is a numerical expression of the ability of an aqueous solution to carry an electric current. This ability depends on the presence of ions and their total concentration, mobility, valence, and relative concentrations and on temperature. Conductivity is highly dependent on temperature and should be reported at a particular temperature, i.e., 20.2 microSiemens per centimeter (mS/cm) at 14°C.

Dissolved Oxygen (DO) – DO levels in natural and wastewater depend on the physical, chemical, and biochemical activities in the water sample.

Groundwater Sample – A quantity of water removed from the ground, usually via a monitoring well that may or may not be lined with a well casing.

Oxidation-Reduction Potential (ORP) - A measure of the activity ratio of oxidizing and reducing species as determined by the electromotive force developed by a noble metal electrode immersed in water, as referenced against a reference electrode. A reference electrode commonly used in the field is the silver/silver chloride electrode, which has a voltage offset of about 210 mV from the standard hydrogen electrode (SHE). To convert field ORP measurements to equivalent SHE values, approximately 210 mV must be added to the ORP values obtained using the silver/silver chloride electrode. The actual offset depends on the concentration of the potassium chloride (KCl) in the field reference electrode and the temperature. Offsets typically range from 199 (saturated KCl) to 205 (3.5 Molar KCl) to 222 mV (1 Molar KCl) at 25°C and are greater at lower temperatures.

pH - The negative logarithm (base 10) of the hydrogen ion activity. The hydrogen ion activity is related to the hydrogen ion concentration, and, in a relatively weak solution, the two are nearly equal. Thus, for all practical purposes, pH is a measure of the hydrogen ion concentration.

pH Paper - Indicator paper that turns different colors depending on the pH of the solution to which it is exposed. Comparison with color standards supplied by the manufacturer will then give an indication of the solution's pH.

Representativeness – A qualitative description of the degree to which an individual sample accurately reflects population characteristics or parameter variations at a sampling point. It is therefore an important characteristic not only of assessment and quantification of environmental threats posed by the site, but also for providing information for engineering design and construction. Proper sample location selection and proper sample collection methods are important to ensure that a truly representative sample has been collected.

Salinity – The measurement of dissolved salts in a given mass of solution. Note: most field meters determined salinity automatically from conductivity and temperature. The value will be displayed in either parts per thousand (ppt) or percent (e.g., 35 ppt equals 3.5 percent). The parts per thousand symbol ($^0/_{00}$) is not the same as the percent symbol (%).

Turbidity – Turbidity in water is caused by suspended matter such as clay, silt, and fine organic and inorganic matter. Turbidity is an expression of the optical property that causes light to be scattered and absorbed rather than transmitted in a straight line through the sample.

4.0 RESPONSIBILITIES AND PERSONNEL QUALIFICATIONS

Project Manager - The Project Manager is responsible for determining the sampling objectives, initial sampling locations, and field procedures used in the collection of groundwater samples. Additionally, in consultation with other project personnel (geologist, hydrogeologist, etc.), the Project Manager identifies sampling locations.

Site Safety Officer (SSO) - The SSO (or a qualified designee) is responsible for providing the technical support necessary to implement the project Health and Safety Plan (HASP). This includes but is not be limited to performing air quality monitoring during sampling, boring and excavation activities, and ensuring that workers and offsite (downwind) individuals are not exposed to hazardous levels of airborne contaminants. The SSO or SSO designee may also be required to advise the FOL on other safety-related matters regarding sampling, such as mitigative measures to address potential hazards from hazardous objects or conditions.

Project Geologist/Sampler - The project geologist/sampler is responsible for the proper acquisition of samples in accordance with this SOP or other project-specific documents. In addition, this individual is responsible for the completion of all required paperwork (e.g., sample log sheets, field notebook, boring logs, container labels, custody seals, and chain-of-custody forms) associated with the collection of those samples.

Project Hydrogeologist – This individual is responsible for selecting and detailing the specific groundwater sampling techniques, onsite water quality testing (type, frequency, and location), equipment to be used, and providing detailed input in this regard to the project planning documents. The project hydrogeologist is also responsible for properly briefing and overseeing the performance of site sampling personnel.

Field Operations Leader (FOL) – This individual is primarily responsible for the execution of the planning document containing the Sampling and Analysis Plan (SAP). This is accomplished through management of a field sampling team for the proper acquisition of samples. He or she is responsible for the supervision of onsite analyses; ensuring proper instrument calibration, care, and maintenance; sample collection and handling; the completion and accuracy of all field documentation; and making sure that custody of all samples obtained is maintained according to proper procedures. When appropriate and as directed by the FOL, such responsibilities may be performed by other qualified personnel (e.g., field technicians) where credentials and time permit. The FOL is ultimately responsible for adherence to Occupational Safety and Health Administration (OSHA) regulations during these operations through self acquisition or through the management of a field team of samplers.
General personnel qualifications for groundwater sample collection and onsite water quality testing include the following:

- Occupational Safety and Health Administration (OSHA) 40-hour and applicable refresher training.
- Capability of performing field work under the expected physical and environmental (i.e., weather) conditions.

- Familiarity with appropriate procedures for sample documentation, handling, packaging, and shipping.

5.0 HEALTH AND SAFETY

Specific safety and health precautions are identified throughout this SOP. In addition to those precautions, the following general hazards may be incurred during sampling activities:

- Knee injuries from kneeling on hard surfaces
- Slips, trips, and falls
- Cuts and lacerations
- Traffic hazards associated with sampling in parking areas and roadways and along highways.

Methods of avoiding these hazards are provided below.

Knee injuries – Many monitoring wells are installed as flush mounts. Personnel are required to kneel to open these wells and to take groundwater level measurements, etc. This could result in knee injuries from kneeling on stones/foreign objects and general damage due to stress on the joints. To combat this hazard:

- Clear any foreign objects from the work area.
- Wear hard-sided knee pads.

Slips, Trips, and Falls – These hazards exist while traversing varying terrains carrying equipment to sample wells. To minimize these hazards:

- Pre-survey well locations. Eliminate, barricade, or otherwise mark physical hazards leading to the locations.
- Carry small loads that do not restrict the field of vision.
- Travel the safest and clearest route (not necessarily the shortest).

Cuts and Lacerations – To prevent cuts and lacerations associated with groundwater sampling, the following provisions are required:

- Always cut away from yourself and others when cutting tubing or rope. This will prevent injury to yourself and others if the knife slips.
- Do not place items to be cut in your hand or on your knee.
- Change blades as necessary to maintain a sharp cutting edge. Many accidents result from struggling with dull cutting attachments.
- Whenever practical, wear cut-resistant gloves (e.g., leather or heavy cotton work gloves) at least on the hand not using the knife.
- Keep cutting surfaces clean and smooth.
- Secure items to be cut -- do not hold them against the opposing hand, a leg, or other body part.

- When transporting glassware, keep it in a hard-sided container such as a cooler so that if there is a fall, you will be less likely to get cut by broken glass.

- DO NOT throw broken glass or glass ampoules into garbage bags. Place broken glass and glass ampoules in hard-sided containers such as a cardboard box or directly into a dumpster. DO NOT reach into garbage bags to retrieve any item accidentally thrown away. Empty the contents onto a flat surface to avoid punctures and lacerations from reaching where you cannot see.

Vehicular and Foot Traffic Hazards – When sampling along the roadway or near traffic patterns, follow the following precautions:

- Motorists may be distracted by onsite activities – ASSUME THEY DO NOT SEE YOU OR MEMBERS OF YOUR FIELD CREW.

- DO NOT place obstructions (such as vehicles) along the sides of the road that may cause site personnel to move into the flow of traffic to avoid your activities or equipment or that will create a blind spot.

- **Provide a required free space of travel.** Maintain at least 6 feet of space between you and moving traffic. Where this is not possible, use flaggers and/or signs to warn oncoming traffic of activities near or within the travel lanes.

- Face Traffic. Whenever feasible, if you must move within the 6 feet of the required free space or into traffic, attempt to face moving traffic at all times. Always leave yourself an escape route.

- Wear high-visibility vests to increase visual recognition by motorists.

- Do not rely on the vehicle operator's visibility, judgment, or ability. Make eye contact with the driver. Carefully and deliberately use hand signals so they will not startle or confuse motorists or be mistaken for a flagger's direction before moving into traffic.

- Your movements may startle a motorist and cause an accident, so move deliberately. Do not make sudden movements that might confuse a motorist.

6.0 PROCEDURES

6.1 General

For information derived from a groundwater sample to be useful and accurate, the sample must be representative of the particular zone being sampled. The physical, chemical, and bacteriological integrity of the sample must be maintained from the time of sampling to the time of analysis to keep any changes in water quality parameters to a minimum.

CAUTION

A closed well may generate and accumulate gases due to biological degradation, evolution of volatile chemicals from groundwater into the air, or other chemical actions. These gases may also be artificially generated, such as in the case of air sparging or extraction wells, which may take several days to depressurize. See Section 6.6.2 for safety measures to be employed to protect sampling personnel.

Methods for withdrawing samples from completed wells include the use of pumps, compressed air or nitrogen, bailers, and various types of samplers. The primary considerations in obtaining a representative sample of groundwater are to avoid collection of stagnant (standing) water in the well and to avoid physical or chemical alteration of the water sample due to external influences of the sampling technique(s). In a non-pumping well, there will be little or no vertical mixing of water in the well pipe or casing, and stratification will occur. The well water in the screened section will mix with groundwater due to normal flow patterns, but the well water above the screened section will remain isolated and become stagnant. Concentration gradients resulting from mixing and dispersion processes, layers of variable geologic permeability, and the presence of separate-phase product (e.g., floating hydrocarbons) may cause stratification. Excessive pumping or improper sampling methods can dilute or increase contaminant concentrations in the collected sample compared to what is representative of the integrated water column as it naturally occurs at that point, resulting in the collection of a non-representative sample. To safeguard against collecting non-representative samples, the following approach shall be followed prior to sample acquisition:

> ***CAUTION***
> Mechanical agitation of well water may cause off-gas generation of volatile contaminants, creating an inhalation exposure to the sampler(s). Where avoiding an inhalation exposure is not possible and mechanical agitation is possible, pump into closed-top containers to control potential air emissions.

1. If possible, position yourself (and the sampling equipment) upwind of the well head.

2. Purge the monitoring well to be sampled prior to obtaining any samples from it. Evacuation of three to five well volumes is recommended prior to sampling, unless low-flow purging and sampling methods are utilized as described in Section 6.7 (Consult the site-specific SAP for exact purging parameters). In a high-yielding groundwater formation and where there is no stagnant water in the well above the screened section, extensive evacuation prior to sample withdrawal is not as critical as it is in a low-yielding well or in wells containing stagnant water.

3. For wells with low yields that are purged dry during sampling, evacuate the well and allow it to recover to 75 percent of full capacity prior to sample acquisition. If the recovery rate is fairly rapid (generally 300 mL per minute or greater), attempt to continue evacuation until the number of well volumes specified in the SAP is achieved. If this cannot be accomplished, allow recovery to 75 percent of capacity and begin sampling.

> ***CAUTION***
> For moderate to high-yielding monitoring wells, an evacuation rate that does not cause excessive turbulence in the well should be selected. There is no absolute safeguard against contaminating the sample with stagnant water; hence, special techniques are required for purging to minimize the potential for sample contamination (see below).

4. For moderate to high-yielding monitoring wells, use one of the following purge techniques:

   - Place a submersible pump or the intake line of a surface pump or bailer just below the water surface when removing the stagnant water.

   - While purging and as the water level decreases, lower the pump or intake line as the water level drops in the well. Three to five volumes of water shall be removed to provide reasonable assurance that all stagnant water has been evacuated. After this is accomplished, a bailer or other approved device may be used to collect the sample for analysis.

- Unless otherwise directed, place the intake line of the sampling pump (or the submersible pump itself) near the center of the screened section, and pump approximately one casing volume of water from the well at a low purge rate equal to the well's recovery rate (low-flow sampling).

6.2 Sampling, Monitoring, and Evacuation Equipment

Sample containers shall conform to the guidelines in SOP SA-6.1.

The following equipment shall be on hand when sampling groundwater wells (reference SOPs SA-6.1 and SA-7.1):

- Sample packaging and shipping equipment – Coolers for sample shipping and cooling, chemical preservatives, appropriate sampling containers and filler materials, ice, labels, and chain-of-custody documents.
- Field tools and instrumentation
  - Multi-parameter water quality meter with an in-line sample chamber capable of measuring ORP, pH, temperature, DO, specific conductance, turbidity, and salinity, or individual meters (as applicable)
  - pH Paper
  - Camera and film (if appropriate)
  - Appropriate keys (for locked wells)
  - Water level indicator and/or oil-water interface probe if separate-phase product is expected
- Pumps
  - Shallow-well pumps: Centrifugal, bladder, suction, or peristaltic pumps with drop lines and air-lift apparatus (compressor and tubing) where applicable.
  - Deep-well pumps: Submersible pump and electrical power-generating unit, or bladder pumps where applicable.
- Other sampling equipment – Bailers, graduated cylinder, stopwatch, and inert line with tripod-pulley assembly (if necessary).
- Pails – Plastic, graduated.
- Clean paper or cotton towels for cleaning equipment.
- Buckets with lids for collecting purge water.
- Decontamination solutions – Deionized water, potable water, phosphate-free laboratory-grade detergent, and analytical-grade solvent (e.g., pesticide-grade isopropanol), as required.

Ideally, sample withdrawal equipment shall be completely inert, economical, easily cleaned, cleaned prior to use, reusable, able to operate at remote sites in the absence of power sources, and capable of delivering variable rates for well purging and sample collection.

6.3 Calculations of Well Volume

To ensure that the proper volume of water has been removed from the well prior to sampling, it is first necessary to know the volume of standing water in the well pipe (including well screen where applicable). This volume can be easily calculated by the following method. Calculations shall be entered in the site logbook or field notebook or on a sample log sheet form or equivalent electronic form(s) (see SOP SA-6.3):

1. Obtain all available information on well construction (location, casing, screen, etc.).
2. Determine well or inner casing diameter.
3. Measure and record static water level (depth below ground level or top of casing reference point).
4. Determine depth of well by sounding using a clean, decontaminated, weighted tape measure or water level indicator.
5. Calculate number of linear feet of static water (total depth or length of well pipe minus the depth to static water level).
6. Calculate one static well volume in gallons $V = (0.163)(T)(r^2)$

where:	V	=	Static volume of well in gallons.
	T	=	Linear feet of water in the well.
	r	=	Inside radius of well casing in inches.
	0.163	=	Conversion factor (compensates for conversion of casing radius from inches to feet and cubic feet to gallons and pi.

7. Per evacuation volumes discussed above, determine the minimum amount to be evacuated before sampling.

Measuring devices may become contaminated when gathering the above information if they are submerged in contaminated water. Decontamination of the tape or water level indicator must be conducted between measurements in different wells as follows:

1. Saturate a paper towel or clean cotton towel with deionized water.
2. As the measuring device is extracted, wipe the tape, changing the cleaning surface frequently.
3. After it is extracted, rinse the probe or tape using a spray bottle of deionized water over a bucket or similar collection container.

Based on the contaminant (oily, etc), it may be necessary to use a soap and water wash and rinse to remove contaminants. Isopropanol can be used on the probe/tape. However, it is recommended that the use of solvents on the tape be minimized because they could degrade the protective covering or possibly remove the scale designations. If isopropanol (or some other solvent) is used, assure that the manufacturer/supplier Material Safety Data Sheet (MSDS) is obtained, kept on site at a readily available location with other MSDSs, and reviewed by personnel prior to the first usage of the solvent. Also, add the substance to the site-specific Hazardous Chemical Inventory list (see Section 5 of the TtNUS Health and Safety Guidance Manual [HSGM], Hazard Communication Program and OSHA Standard 29 CFR 1910.1200).

6.4 Evacuation of Static Water – Purging

6.4.1 General

The amount to be purged from each well will be determined prior to sample collection. This amount will depend on the intent of the monitoring program and the hydrogeologic conditions. Programs to determine overall quality of water resources may require long pumping periods to obtain a sample that is representative of a large volume of the aquifer. The pumped volume may be specified prior to sampling so that the sample can be a composite of a known volume of the aquifer. Alternately, the well can be pumped until parameters such as temperature, specific conductance, pH, and turbidity (as applicable) have stabilized. Onsite measurements of these parameters shall be recorded in the site logbook or field notebook or on standardized data sheets or an equivalent electronic form(s).

6.4.2 Evacuation Devices

The following discussion is limited to those devices commonly used at hazardous waste sites. Attachment A provides guidance on the proper evacuation device to use for given sampling situations. All of these techniques involve equipment that is portable and readily available.

~~Bailers~~

Bailers are the simplest evacuation devices used and have many advantages. They generally consist of a length of tubing equipped with a base plate and ball check-valve at the bottom. Bailers are comprised of stainless steel and plastic. They come in a variety of sizes, but the two most often used are 2 inches and 4 inches in diameter. An inert non-absorbent line such as polyethylene rope is used to lower and then raise the bailer to retrieve the sample. As the bailer is lowered into the water column, the ball is pushed up allowing the tube to be filled. When the bailer is pulled upward, the ball seats in the base plate preventing water from escaping.

Advantages of bailers include the following:

- There are few limitations on size and materials used.
- No external power source is needed.
- Bailers are inexpensive and can be dedicated and hung in a well to reduce the chances of cross-contamination.
- Bailers are relatively easy to decontaminate.

Limitations on the use of bailers include the following:

- It is time consuming to remove stagnant water using a bailer.
- Splashing the bailer into the water or transfer of sample may cause aeration.
- The use of a bailer does not permit constant in-line monitoring of groundwater parameters.
- Use of bailers is physically demanding, especially in warm temperatures at personal protection equipment (PPE) levels above Level D.

~~Safety concerns using a bailer include the following:~~

- Muscle stress and strain, especially when using 4-inch bailers and when pulling from excessively deep wells.
- Entanglement, possible hand/finger injuries, and rope burns during a sudden release of the bailer back down the well.
- Direct contact with contaminants of concern and sample preservatives when discharging the bailer contents because there is not a high level of control during a direct pour, and splashing and indirect contact with contaminants/preservatives could occur.

~~Control measures for these hazards are provided in Section 6.6.2.~~

Suction Pumps

There are many different types of inexpensive suction pumps including centrifugal, diaphragm, and peristaltic pumps. Centrifugal and diaphragm pumps can be used for well evacuation at a fast pumping rate and for sampling at a low pumping rate. The peristaltic pump is a low-volume pump that uses rollers to squeeze flexible tubing to create suction. This tubing can be dedicated to a well to prevent cross-contamination from well to well. Suction pumps are all portable, inexpensive, and readily available. However, because they are based on suction, their use is restricted to areas with water levels within 20 to 25 feet of the ground surface. A significant limitation is that the vacuum created by these pumps can cause loss of dissolved gases and volatile organics. Another limitation of these pumps is that they require a secondary energy source to drive them. Electrically driven pumps may require portable generators as energy sources. Air diaphragm pumps require air compressors and/or compressed gas cylinders to drive them. The advantage of the peristaltic pump is that it will operate from a portable battery source. Safety measures associated with these pumps are provided below.

~~Air Lift and Gas Lift Samplers~~

This group of pump samplers uses gas pressure either in the annulus of the well or in a venturi to force groundwater up a sampling tube. These pumps are also relatively inexpensive. Air- or gas-lift samplers are more suitable for well development than for sampling because the samples may be aerated as a result of pump action. Aeration can cause pH changes and subsequent trace metal precipitation or loss of volatile organics.

Submersible Pumps

Submersible pumps take in water and push the sample up a sample tube to the surface. The power sources for these samplers may be compressed gas or electricity. Operation principles vary, and displacement of the sample can be by an inflatable bladder, sliding piston, gas bubble, or impeller. Pumps are available for 2-inch-diameter wells and larger. These pumps can lift water from considerable depths (several hundred feet).

Limitations of this class of pumps include the following:

- They may have low delivery rates.
- Many models are expensive.

- Compressed gas or electric power is needed.
- Sediment in water may cause clogging of the valves or eroding of the impellers with some of these pumps.
- Decontamination of internal components can be difficult and time consuming.

Compressed Gases

Safety concerns using compressed gases as an energy source in these pumps are numerous. The nitrogen gas or compressed air is provided in a compressed gas cylinder at a pressure of approximately 2,000 psi. If damaged, these cylinders can become dangerous projectiles. Additionally, a sudden release of a cylinder's contents can involve considerable force that could cause significant damage to the eyes and/or skin. Protective measures include the following:

- Always wear safety impact glasses when handling compressed gases.
- Always administer compressed gases through an appropriate pressure-reducing regulator.
- When clearing the cylinder connection port, open the cylinder valve only enough to clear foreign debris. During this process, always position the cylinder valve so that it faces away from you and others.
- If the cylinder is designed to accept a valve protection cap, always keep that protection cap in place, except the cylinder is connected for use.
- When using the cylinder, lay the cylinder on its side to avoid the potential of it falling and knocking the valve off (and becoming a missile).
- DO NOT use the compressed nitrogen or air to clean clothing or to spray off the skin. Small cuts in the protective layer of the skin may permit the gas to enter into the bloodstream, presenting the potential danger of an embolism.

See the project-specific HASP for additional direction concerning cylinder safe handling procedures pertaining to the safe handling, transportation, and storage of compressed gas cylinders.

Electrical Shock

Even in situations where portable batteries are used, the potential for electrical shock exists. This potential risk is increased in groundwater sampling activities because of the presence of groundwater near the batteries. This potential is also increased in (prohibited) situations where jury-rigging of electrical connections is performed. Other potential hazards occur when field samplers open the hood of a running car to access the battery as a power source. To control these hazards:

- If you are unfamiliar with electrical devices, do not experiment, get help, and get the proper equipment necessary to power your device.
- Use the proper portable power inverters for cigarette lighter connections to minimize the need to access the battery under the hood of your vehicle.
- Use of electrical generators may pose a number of hazards including noise, those associated with fueling, and indirect sample influence.

To minimize or eliminate electrical generator hazards:

- Inspect the generator before use. Ensure that the generator and any extension cords are rated for the intended operation and have a Ground Fault Circuit Interrupter (GFCI) in line to control potential electrical shock.
- Fuel the generator before purging and sampling to avoid loss of power during sampling.
- Fuel engines only when they are turned OFF and have cooled sufficiently to prevent a fire hazard.
- Place the generator and any fuel source at least 50 feet from the well to be sampled to avoid indirect influence to the sample from fuel vapors or emission gases.

Lifting Hazards

This hazard may be experienced when moving containers of purge water, equipment, cylinders, etc. To control these potential hazards:

- Do not fill purge buckets to more than 80 percent of their capacity.
- Obtain a gas cylinder of sufficient size to complete the designated task but not too large to handle. K-size cylinders weigh approximately 135 pounds and are difficult to handle. M-size cylinders weigh approximately 50 pounds and are easier to handle and move.
- When necessary, get help lifting and moving gas cylinders and other heavy objects. Minimize twisting and turning while lifting. If it is necessary to move these cylinders or generators over significant distance, use mechanical means (carts, etc.).
- Use proper lifting techniques as described in Section 4.4 of the HSGM.

6.5 Onsite Water Quality Testing

This section describes the procedures and equipment required to measure the following parameters of an aqueous sample in the field:

- pH
- Specific conductance
- Temperature
- DO
- ORP
- Turbidity
- Salinity

This section is applicable for use in an onsite groundwater quality monitoring program to be conducted at a hazardous or nonhazardous waste site. The procedures and equipment described are applicable to groundwater samples and are not, in general, subject to solution interferences from color, turbidity, or colloidal material or other suspended matter.

This section provides general information for measuring the parameters listed above with instruments and techniques in common use. Because instruments from different manufacturers may vary, review of the manufacturer's literature pertaining to the use of a specific instrument is required before use. Most meters

used to measure field parameters require calibration on a daily basis. Refer to SOP SA-6.3 for an example equipment calibration log.

6.5.1 Measurement of pH

6.5.1.1 General

Measurement of pH is one of the most important and frequently used tests in water chemistry. Practically every phase of water supply and wastewater treatment such as acid-base neutralization, water softening, and corrosion control is pH dependent. Likewise, the pH of leachate can be correlated with other chemical analyses to determine the probable source of contamination. It is therefore important that reasonably accurate pH measurements be taken and recorded on the groundwater sample log sheet (Attachment B) or equivalent electronic form.

Two methods are given for pH measurement: the pH meter and pH indicator paper. Indicator paper is used when only an approximation of the pH is required or when pH meter readings need to be verified, and the pH meter is used when a more accurate measurement is needed. The response of a pH meter can be affected by high levels of colloidal or suspended solids, but the effect is generally of little significance. Consequently, specific methods to overcome this interference are not described. The response of pH paper is unaffected by solution interferences from color, turbidity, or colloidal or suspended materials unless extremely high levels capable of coating or masking the paper are encountered. In such cases, use of a pH meter is recommended.

6.5.1.2 Principles of Equipment Operation

Use of pH papers for pH measurement relies on a chemical reaction caused by the acidity or alkalinity of the solution created by the addition of the water sample reacting with the indicator compound on the paper. Various types of pH papers are available, including litmus (for general acidity or alkalinity determination) and specific, or narrower range, pH range paper.

Use of a pH meter relies on the same principle as other ion-specific electrodes. Measurement relies on establishment of a potential difference across a glass or other type of membrane in response to (in this instance, hydrogen) ion activity (which is usually similar to concentration) across that membrane. The membrane is conductive to ionic species and, in combination with a standard or reference electrode, a potential difference proportional to the ion concentration is generated and measured.

6.5.1.3 Equipment

The following equipment is to be used for obtaining pH measurements:

- A stand-alone portable pH meter or combination meter equipped with an in-line sample chamber (e.g., YSI 600 series and Horiba U-22).
- Combination electrode with polymer body to fit the above meter. Alternately, a pH electrode and a reference electrode can be used if the pH meter is equipped with suitable electrode inputs.
- Buffer solutions, as specified by the manufacturer. If the buffer solutions are considered hazardous per 29 Code of Federal Regulations (CFR) 1910.1200 (Hazard Communication) or the volumes used are greater than consumer commodity levels, the SSO shall obtain MSDSs from the manufacturer for the specific buffer solutions (see Section 4 of the HSGM regarding the Hazard Communication Program)

- pH indicator paper to cover the pH range 2 through 12.
- Manufacturer's operation manual. All personnel must be familiar with the equipment operation to ensure that the integrity of samples is preserved and that the equipment is operated safely.

6.5.1.4 Measurement Techniques for Field Determination of pH

pH Meter

The following procedure shall be used for measuring pH with a pH meter (meter standardization is according to manufacturer's instructions):

1. Inspect the instrument and batteries prior to initiation of the field effort.
2. Check the integrity of the buffer solutions used for field calibration. Buffer solutions need to be changed often as a result of degradation upon exposure to the atmosphere.
3. If applicable, make sure all electrolyte solutions within the electrode(s) are at their proper levels and that no air bubbles are present within the electrode(s).
4. Calibrate the meter and electrode(s) on a daily use basis (or as recommended by manufacturer) following manufacturer's instructions. Record calibration data on a water quality meter calibration log sheet (Attachment C) or equivalent electronic form.
5. Immerse the electrode(s) in the sample. Stabilization may take several seconds to minutes. If the pH continues to drift, the sample temperature may not be stable, a physical reaction (e.g., degassing) may be taking place in the sample, or the meter or electrode may be malfunctioning. The failure of the measurements to stabilize must be clearly noted in the logbook or equivalent electronic form.
6. Read and record the pH of the sample. pH shall be recorded to the nearest 0.01 pH standard unit. Also record the sample temperature (unless otherwise specified in the SAP, record temperatures to the nearest whole degree Fahrenheit or 0.5 degree Celsius).
7. Rinse the electrode(s) with deionized water.
8. Store the electrode(s) in an accordance with manufacturer's instructions when not in use.

Any visual observation of conditions that may interfere with pH measurement, such as oily materials or turbidity, shall be noted and avoided as much as possible.

pH Paper

Use of pH paper is very simple and requires no sample preparation, standardization, etc. pH paper is available in several ranges, including wide-range (indicating approximately pH 1 to 12), mid-range (approximately pH 0 to 6, 6 to 9, 8 to 14) and narrow-range (many available, with ranges as narrow as 1.5 pH units). The appropriate range of pH paper shall be selected. If the pH is unknown the investigation shall start with wide-range paper and proceed with successively narrower range paper until the sample pH is determined. To measure the pH with pH paper:

1. Collect a small portion of sample into a clean container.

2. Dip the pH paper into this small portion of sample.

3. Compare the color of the paper to the color chart that is provided with the pH paper and read the corresponding pH from the chart.

4. Record the pH value from the chart on the sampling log sheet.

5. Discard the used pH paper as trash.

6. Discard the small volume of sample that was used for the pH measurement with the other investigative derived waste.

6.5.2 Measurement of Specific Conductance

6.5.2.1 General

Conductance provides a measure of dissolved ionic species in water and can be used to identify the direction and extent of migration of contaminants in groundwater or surface water. It can also be used as a measure of subsurface biodegradation or to indicate alternate sources of groundwater contamination.

Conductivity is a numerical expression of the ability of a water sample to carry an electric current. This value depends on the total concentration of ionized substances dissolved in the water and the temperature at which the measurement is made. The mobility of each of the various dissolved ions, their valences, and their actual and relative concentrations affect conductivity.

It is important to obtain a specific conductance measurement soon after taking a sample because temperature changes, precipitation reactions, and absorption of carbon dioxide from the air all affect specific conductance. Most conductivity meters in use today display specific conductance in units of mS/cm, which is the conductivity normalized to a temperature of 25°C. These are the required units to be recorded on the groundwater sample log field form or equivalent electronic form.

6.5.2.2 Principles of Equipment Operation

An aqueous system containing ions will conduct an electric current. In a direct-current field, the positive ions migrate toward the negative electrode, and the negatively charged ions migrate toward the positive electrode. Most inorganic acids, bases, and salts such as hydrochloric acid, sodium carbonate, and sodium chloride, respectively, are relatively good conductors. Conversely, organic compounds such as sucrose or benzene, which do not dissociate in aqueous solution, conduct a current very poorly if at all.

A conductance cell and a Wheatstone Bridge (for the measurement of potential difference) may be used for measurement of electrical resistance. The ratio of current applied to voltage across the cell may also be used as a measure of conductance. The core element of the apparatus is the conductivity cell containing the solution of interest. Depending on the ionic strength of the aqueous solution to be tested, a potential difference is developed across the cell, which can be converted directly or indirectly (depending on instrument type) to a measurement of specific conductance.

6.5.2.3 Equipment

The following equipment is needed for taking specific conductance measurements:

- Stand-alone portable conductivity meter or combination meter equipped with an in-line sample chamber (e.g., YSI 600 series and Horiba U-22).
- Calibration solution, as specified by the manufacturer.
- Manufacturer's operation manual.

A variety of conductivity meters are available that may also be used to monitor salinity and temperature. Probe types and cable lengths vary, so equipment must be obtained to meet the specific requirements of the sampling program.

6.5.2.4 Measurement Techniques for Specific Conductance

The steps involved in taking specific conductance measurements are as follows (calibration shall be conducted according to manufacturer's instructions):

1. Check batteries and calibrate instrument before going into the field.
2. Calibrate on a daily use basis (or as recommended by manufacturer), according to the manufacturer's instructions and record all pertinent information on a water quality meter calibration log sheet or equivalent electronic form. Potassium chloride solutions with a specific conductance closest to the values expected in the field shall be used for calibration.
3. Rinse the cell with one or more portions of the sample to be tested or with deionized water and shake excess water from the cell.
4. Immerse the electrode in the sample and measure the conductivity.
5. Read and record the results in a field logbook or on a sample log sheet or equivalent electronic form.
6. Rinse the electrode with deionized water.

If the specific conductance measurements become erratic, recalibrate the instrument and see the manufacturer's instructions for troubleshooting assistance.

6.5.3 Measurement of Temperature

6.5.3.1 *General*

In combination with other parameters, temperature can be a useful indicator of the likelihood of biological action in a water sample. It can also be used to trace the flow direction of contaminated groundwater. Temperature measurements shall be taken in situ, or as quickly as possible in the field because collected water samples may rapidly equilibrate with the temperature of their surroundings.

6.5.3.2 Equipment

Temperature measurements may be taken with alcohol-toluene, mercury-filled, dial-type thermometers or combination meters equipped with an in-line sample chamber (e.g., YSI 600 series and Horiba U-22). In addition, various meters such as specific conductance or DO meters that have temperature measurement capabilities may also be used. Using such instrumentation along with suitable probes and cables, in-situ measurements of temperature at great depths can be performed.

6.5.3.3 Measurement Techniques for Water Temperature

If a thermometer is used to determine the temperature for a water sample, use the following procedure:

1. Immerse the thermometer in the sample until temperature equilibrium is obtained (1 to 3 minutes). To avoid the possibility of cross-contamination, the thermometer shall not be inserted into samples that will undergo subsequent chemical analysis.

2. Record values in a field logbook or on a sample log sheet or equivalent electronic form.

If a temperature meter or probe is used:

1. Calibrate the instrument according to manufacturer's recommendations prior to use.

2. Immerse the meter/probe in the sample until temperature equilibrium is obtained (1 to 3 minutes). To avoid the possibility of cross-contamination, the meter/probe shall not be inserted into samples that will undergo subsequent chemical analysis.

3. Record values in a field logbook or on a sample log sheet or equivalent electronic form.

6.5.4 Measurement of Dissolved Oxygen

6.5.4.1 General

DO levels in natural water and wastewater depend on the physical, chemical and biochemical activities in the water body. In addition, the growth of many aquatic organisms and the rate of corrosivity are dependent on DO concentrations. Thus, analysis for DO is a key test in water pollution and waste treatment process control. If at all possible, DO measurements shall be taken in situ because concentrations may show a large change in a short time if the sample is not adequately preserved.

The monitoring method discussed herein is limited to the use of DO meters. Chemical methods of analysis (i.e., Winkler methods) are available but require more equipment and greater sample manipulation. Furthermore, DO meters using a membrane electrode are suitable for highly polluted waters because the probe is completely submersible and is not susceptible to interference caused by color, turbidity, or colloidal material or suspended matter.

6.5.4.2 Principles of Equipment Operation

DO probes are normally electrochemical cells that have two solid metal electrodes of different nobility immersed in an electrolyte. The electrolyte is retained by an oxygen-permeable membrane. The metal of highest nobility (the cathode) is positioned at the membrane. When a suitable potential exists between

the two metals, reduction of oxygen to hydroxide ion (OH^-) occurs at the cathode surface. An electrical current is developed that is directly proportional to the rate of arrival of oxygen molecules at the cathode. This rate is proportional to the oxygen concentration in the water being measured.

Because the current produced in the probe is directly proportional to the rate of arrival of oxygen at the cathode, it is important that a fresh supply of sample always be in contact with the membrane. Otherwise, the oxygen in the aqueous layer along the membrane is quickly depleted and false low readings are obtained. It is therefore necessary to stir the sample (or the probe) constantly to maintain fresh solution near the membrane interface. Stirring, however, shall not be so vigorous that additional oxygen is introduced through the air-water interface at the sample surface. To avoid this possibility, some probes are equipped with stirrers to agitate the solution near the probe, leaving the surface of the solution undisturbed.

DO probes are relatively unaffected by interferences. Interferences that can occur are reactions with oxidizing gases such as chlorine or with gases such as hydrogen sulfide that are not easily depolarized from the indicating electrode. If a gaseous interference is suspected, it shall be noted in the field logbook and checked if possible. Temperature variations can also cause interference because probes exhibit temperature sensitivity. Automatic temperature compensation is normally provided by the manufacturer. This compensation can counteract some of the temperature effects but not all of them.

6.5.4.3 Equipment

The following equipment is needed to measure DO concentrations:

- A stand-alone portable DO meter or combination meter equipped with an in-line sample chamber (e.g., YSI 600 series and Horiba U-22).
- Sufficient cable to allow the probe to contact the sample.
- Manufacturer's operation manual.

6.5.4.4 Measurement Techniques for Dissolved Oxygen Determination

DO probes differ as to instructions for use. Follow the manufacturer's instructions to obtain an accurate reading. The following general steps shall be used to measure DO concentrations:

1. Check the DO meter batteries before going to the field.
2. Condition the probe in a water sample for as long a period as practical before use in the field. Long periods of dry storage followed by short periods of use in the field may result in inaccurate readings.
3. Calibrate the instrument in the field according to manufacturer's recommendations or in a freshly air-saturated water sample of known temperature.
4. Record all pertinent information on a water quality meter calibration log sheet or equivalent electronic form.
5. Rinse the probe with deionized water.
6. Immerse the probe in the sample. Be sure to provide for sufficient flow past the membrane by stirring the sample. Probes without stirrers placed in wells may be moved up and down to achieve the required mixing.

7. Record the DO content and temperature of the sample in a field logbook or on a sample log sheet or equivalent electronic form.

8. Rinse the probe with deionized water.

9. Recalibrate the probe when the membrane is replaced, or as needed. Follow the manufacturer's instructions.

Note that in-situ placement of the probe is preferable because sample handling is not involved. This however may not always be practical.

Special care shall be taken during sample collection to avoid turbulence that can lead to increased oxygen solubilization and positive test interferences.

6.5.5 Measurement of Oxidation-Reduction Potential

6.5.5.1 General

ORP provides a measure of the tendency of organic or inorganic chemicals to exist in an oxidized state. The ORP parameter therefore provides evidence of the likelihood of anaerobic degradation of biodegradable organics or the ratio of activities of reduced to oxidized species in the sample.

6.5.5.2 Principles of Equipment Operation

When an inert metal electrode, such as platinum, is immersed in a solution, a potential is developed at that electrode depending on the ions present in the solution. If a reference electrode is placed in the same solution, an ORP electrode pair is established. This electrode pair allows the potential difference between the two electrodes to be measured and is dependent on the concentration of the ions in solution. By this measurement, the ability to oxidize or reduce species in solution may be determined. Supplemental measurements, such as DO, may be correlated with ORP to provide knowledge of the quality of the solution, water, or wastewater.

6.5.5.3 Equipment

The following equipment is needed for measuring the ORP of a solution:

- A combination meter with an in-line sample chamber (e.g., YSI 600 series and Horiba U-22).
- Reference solution as specified by the manufacturer.
- Manufacturer's operation manual.

6.5.5.4 Measurement Techniques for Oxidation-Reduction Potential

The following procedure is used for measuring ORP:

1. Check the equipment using the manufacturer's recommended reference solution and check its batteries before going to the field.

2. Thoroughly rinse the electrode with deionized water.

3. If the probe does not respond properly to the recommended reference solution, verify the sensitivity of the electrodes by noting the change in millivolts when the pH of a test solution is altered. The ORP will increase when the pH of a test solution decreases, and the ORP will decrease when the test solution pH is increased. Place the sample in a clean container and agitate the sample. Insert the electrodes and note that the ORP drops sharply when the caustic is added (i.e., pH increases) thus indicating that the electrodes are sensitive and operating properly. If the ORP increases sharply when the caustic is added, the polarity is reversed and must be corrected in accordance with the manufacturer's instructions or the probe should be replaced.

4. Record all pertinent information on a water quality meter calibration log sheet or equivalent electronic form.

6.5.6 Measurement of Salinity

6.5.6.1 General

Salinity is a unitless property of industrial and natural waters. It is the measurement of dissolved salts in a given mass of solution. Most field meters determine salinity automatically from conductivity and temperature. The displayed value will be displayed in either parts per thousand (ppt) or percent (e.g., 35 ppt equals 3.5 percent).

6.5.6.2 Principles of Equipment Operation

Salinity is determined automatically from the meter's conductivity and temperature readings according to algorithms (such as are found in Standard Methods for the Examination of Water and Wastewater). Depending on the meter, the results are displayed in either ppt or percent. The salinity measurements are carried out in reference to the conductivity of standard seawater (corrected to salinity = 35 ppt).

6.5.6.3 Equipment

The following equipment is needed for salinity measurements:

- A multi-parameter water quality meter capable of measuring conductivity and temperature and converting them to salinity (e.g., Horiba U-22 or YSI 600 series).
- Calibration solution as specified by the manufacturer.
- Manufacturer's operation manual.

6.5.6.4 Measurement Techniques for Salinity

The steps involved in taking salinity measurements are as follows (standardization shall be conducted according to manufacturer's instructions):

1. Check the expiration date of the solutions used for field calibration and replace them if they are expired.

2. Check batteries and calibrate the meter before going into the field.

3. Calibrate on a daily use basis, according to the manufacturer's instructions and record all pertinent information on a water quality meter calibration log sheet or equivalent electronic form.

4. Rinse the cell with the sample to be tested. This is typically accomplished as the probe is placed in line during the collection of the purge water up to the time of sample acquisition.

5. Immerse the multi-probe in the sample and measure the salinity. Read and record the results in a field logbook or on a sample log sheet or equivalent electronic form.

6. Rinse the probes with deionized water.

6.5.7 Measurement of Turbidity

6.5.7.1 General

Turbidity is an expression of the optical property that causes light to be scattered and absorbed rather than transmitted in a straight line through the sample. Turbidity in water is caused by suspended matter such as clay, silt, or other finely divided organic and inorganic matter and microscopic organisms including plankton.

It is important to obtain a turbidity reading immediately after taking a sample because irreversible changes in turbidity may occur if the sample is stored too long.

6.5.7.2 Principles of Equipment Operation

Turbidity is measured by the Nephelometric Method, which is based on a comparison of the intensity of light scattered by the sample under defined conditions with the intensity of light scattered by a standard reference suspension under the same conditions. The higher the scattered light intensity, the higher the turbidity.

Formazin polymer is used as the reference turbidity standard suspension because of its ease of preparation combined with a higher reproducibility of its light-scattering properties than clay or turbid natural water. The turbidity of a specified concentration of formazin suspension is defined as 40 nephelometric units. This same suspension has an approximate turbidity of 40 Jackson units when measured on the candle turbidimeter. Therefore, nephelometric turbidity units (NTUs) based on the formazin preparation will approximate units derived from the candle turbidimeter but will not be identical to them.

6.5.7.3 Equipment

The following equipment is needed for turbidity measurements:

- A turbidity meter (e.g., LaMotte 2020) that calibrates easily using test cells with standards of 0.0, 1.0, and 10 NTUs, or a combination meter equipped with an in-line sample chamber (e.g., YSI 600 series and Horiba U-22).

- Calibration solution and sample tubes, as specified by the manufacturer.

- Manufacturer's operation manual.

6.5.7.4 Measurement Techniques for Turbidity

The steps involved in taking turbidity measurements utilizing an electrode (e) or light meter (l) are listed below (standardization shall be done according to manufacturer's instructions):

1. Check the expiration date of the solutions used for field calibration and replace them if they are expired.
2. Check batteries and calibrate the instrument before going into the field.
3. Calibrate on a daily basis according to the manufacturer's instructions, and record all pertinent information on a turbidity meter calibration log sheet (Attachment C) or equivalent electronic form.
4. When using the YSI and/or Horiba U-22, rinse the electrode with one or more portions of the sample to be tested or with deionized water.
5. When using the Lamotte 2020, fill the light meter's glass test cell with approximately 5 mL of sample, screw on the cap, wipe off glass to remove all residue that could intercept the instrument's light beam, place the test cell in the light meter, and close the lid.
6. Immerse the electrode in the sample and measure the turbidity.
7. The reading must be taken immediately because suspended solids will settle over time resulting in a lower, inaccurate turbidity reading.
8. Read and record the results in a field logbook or on a sample log sheet or equivalent electronic form. Include a physical description of the sample, including color, qualitative estimate of turbidity, etc.
9. Rinse the electrode or test cell with deionized water.

6.6 Sampling

6.6.1 Sampling Plan

The sampling approach consisting of the following shall be developed as part of the project planning documents approved prior to beginning work in the field:

- Background and objectives of sampling.
- Brief description of area and waste characterization.
- Identification of sampling locations, with map or sketch, and applicable well construction data (well size, depth, screened interval, reference elevation).
- Intended number, sequence, volumes, and types of samples. If the relative degree of contamination between wells is insignificant, a sampling sequence that facilitates sampling logistics may be followed. Where some wells are known or strongly suspected of being highly contaminated, these shall be sampled last to reduce the risk of cross-contamination between wells. In situations where the well is not well-characterized and the nature or extent of airborne contamination is unknown, it is recommended that head space analysis using a photoionization detector (PID) or flame ionization detector (FID) is performed to rate the wells, sampling from least contaminated to most contaminated.

Refer to the project-specific HASP for appropriate information and direction on air monitoring requirements.

- Sample preservation requirements.
- Work schedule.
- List of team members.
- List of observers and contacts.
- Other information, such as the necessity for a warrant or permission of entry, requirements for split samples, access problems, location of keys, etc.
- The FOL shall ensure that the sampling method(s) to be employed is accurately represented in the HASP, indicating the types of sampling to be employed and the hazards. If the methods are not accurately represented, the FOL should rectify this with the HASP author.
- The FOL shall ensure that sampling teams understand the sampling approach that they are to follow. Where sampling teams are made up of personnel from multiple locations, personal sampling experiences may vary. Therefore the FOL shall review project-specific requirements, SOPs, and protocol to be followed. The FOL will conduct periodic surveys to ensure that these methods are being completed per his/her direction.

6.6.2 Sampling Methods as Related to Low-Flow Sampling

The collection of a groundwater sample consists of the following steps:

1. Ensure the safety of the sample location. Take a few minutes to evaluate the area for physical hazards (trip hazards, uneven ground, overhanging branches, etc.) and natural hazards (snakes, bees, spiders, etc.) that may exist in the area or that may have constructed nests in the well head. Snakes often like to sun themselves on concrete well pads. Follow provisions in the project-specific HASP and/or HSGM for addressing natural hazards.

2. As indicated earlier, some monitoring wells have the potential to contain pressurized headspace (e.g., through the generation of gases form contaminated groundwater, due to biological processes, degradation of contaminants, or simply based on location such as near a landfill or in areas that intersect lithological abnormalities) or through intentional artificial means such as those associated with air sparging systems. Injection or extraction wells may be artificially pressurized and may remain so for several days after the system has been turned off. This presents a hazard to people opening these wells. The Field Sampling Technician shall employ the following practices to minimize these hazards:

   - Wear safety glasses to protect the eyes. If site-specific observations and conditions indicate that the wells may be pressurized, wear a full-face shield over the safety impact eye protection.
   - DO NOT place your face or any other part of your body over the well when opening because this may place you in a strike zone.
   - Open the well cover at arms length, then step away and allow the well to off gas and stabilize.

   Follow directions provided in the project-specific HASP, Work Plan and/or Sampling Plan pertaining to the use of volatile chemical detection equipment (PID or FID) within the breathing zone of the sampler

during sampling to determine the need to retreat from the work area and/or for the use of respiratory protection (as specified in the HASP).

3. When proper respiratory protection has been donned, sound the well for total depth and water level (using clean equipment) and record these data on a groundwater sampling log sheet or equivalent electronic form; then calculate the fluid volume in the well pipe (as previously described in this SOP). It is imperative that downhole equipment be adequately decontaminated between wells to prevent cross-contamination. Just as sampling occurs from the least contaminated to the most contaminated, it is also recommended that groundwater level measurements be taken in this manner.

4. Calculate volume of well water to be removed as described in Section 6.3.

5. Select the appropriate purging equipment (see Attachment A to this SOP) or as designated within your Work Plan/Sampling Plan. If an electric submersible pump with packer is chosen, go to Step 10.

6. Lower the purging equipment or intake into the well to a short distance below the water level or mid-screen as indicated in project-specific documentation and begin water removal. Remember that some contaminants are "bottom dwellers," and in these cases, project-specific direction may specify placing the intake just above (1 to 2 feet) the well bottom. Secure the pump intake at the well and secure the effluent at the collection container and begin pumping. The pumping rate will be determined based on the decrease in the water level (see Section 6.7) or as directed in your project-specific documents or this SOP. Purge water is generally collected in a 5-gallon bucket or similar open- or closed-top container. To minimize the potential for spills and back injuries, do not fill 5-gallon buckets beyond approximately 80 percent of their capacity. Dispose of purge water was as indicated in the planning document(s). Where necessary, slow the pumping rate or lower the pump intake as required to maintain submergence.

7. Estimate the approximate rate of discharge frequently and record it on the Low Flow Purge Data Sheet (see Attachment D). Estimate flow rate by noting the amount of discharge in a bucket or graduated cylinder per unit time using a watch with a second hand or a stopwatch.

8. Observe the peristaltic pump tubing intake for degassing "bubbles." If bubbles are abundant and the intake is fully submerged, this pump is not suitable for collecting samples for volatile organics.

9. Purge a minimum of three to five casing volumes before sampling (or as directed by the site-specific SAP). In low-permeability strata (i.e., if the well is pumped to dryness), one volume will suffice. Allow the well to recover to 75 percent of initial water level before sampling. Do not overfill purge containers because this increases the potential for spills and lifting injuries.

10. ~~If sampling using a submersible pump, lower the pump intake to mid-screen (or the middle of the open section in uncased wells) and collect the sample. If sampling with a bailer, lower the bailer to just below the water surface.~~

11. ~~For pump and packer assemblies only: Lower the assembly into the well so that the packer is positioned just above the screen or open section. Inflate the packer. Purge a volume equal to at least twice the screened interval (or unscreened open section volume below the packer) before sampling. Packers shall always be tested in a casing section above ground to determine proper inflation pressures for good sealing.~~

12. If the recovery time of the well is very slow (e.g., 24 hours or greater), sample collection can be delayed until the following day. If the well has been purged early in the morning, sufficient water may be standing in the well by the day's end to permit sample collection. If the well is incapable of producing a sufficient volume of sample at any time, take the largest quantity available and record this

occurrence in the site logbook or equivalent electronic form. When this occurs, contact the analytical laboratory to alert them that a reduced sample volume(s) will be submitted for analysis.

13. Fill sample containers and preserve and label them as described in SOP SA-6.1. Many sample bottles will contain preservative when they are shipped to the field. In those cases, do not add preservative.

14. Replace the well cap and lock it as appropriate. Make sure the well is readily identifiable as the source of the sample.

15. Process sample containers as described in SOP SA-6.1.

16. Decontaminate equipment as described in SOP SA-7.1.

6.7 Low-Flow Purging and Sampling

6.7.1 Scope and Application

Low-flow purging and sampling techniques may be required for groundwater sampling activities. The purpose of low-flow purging and sampling is to collect groundwater samples that contain "representative" amounts of mobile organic and inorganic constituents in the vicinity of the selected open well interval, at or near natural flow conditions. This minimum-stress procedure emphasizes negligible water level drawdown and low pumping rates to collect samples with minimal alterations in water chemistry. This procedure is designed primarily to be used in wells with a casing diameter of 1 inch or more and a saturated screen length, or open interval, of 10 feet or less. Samples obtained are suitable for analyses of common types of groundwater contaminants (volatile and semivolatile organic compounds, pesticides, polychlorinated biphenyls [PCBs], metals and other inorganic ions [cyanide, chloride, sulfate, etc.]). This low-flow procedure is not designed for collection of non-aqueous phase liquid samples from wells containing light or dense non-aqueous phase liquids (LNAPLs or DNAPLs).

This procedure is flexible for various well construction types and groundwater yields. The goal of the procedure is to obtain a turbidity level of less than 10 NTUs and to achieve a water level drawdown of less than 0.3 foot during purging and sampling. If these goals cannot be achieved, sample collection can take place provided that the remaining criteria in this procedure are met.

6.7.2 Equipment

The following equipment is required (as applicable) for low-flow purging and sampling:

- Adjustable rate submersible pump (e.g., centrifugal or bladder pump constructed of stainless steel or Teflon).

- Disposable clear plastic bottom-filling bailers to be used to check for and obtain samples of LNAPLs or DNAPLs.

- Tubing – Teflon, Teflon-lined polyethylene, polyethylene, polyvinyl chloride (PVC), Tygon, or stainless steel tubing can be used to collect samples for analysis, depending on the analyses to be performed and regulatory requirements.

- Water level measuring device with 0.01-foot accuracy (electronic devices are preferred for tracking water level drawdown during all pumping operations).

- Interface probe.
- Flow measurement supplies.
- Power source (generator, nitrogen tank, etc.). If a gasoline generator is used, it must be located downwind and at a safe distance from the well so that the exhaust fumes do not contaminate the samples.
- Indicator parameter monitoring instruments – pH, turbidity, specific conductance, and temperature. Use of a flow-through cell is recommended. Optional indicators - ORP, salinity, and DO. A flow-through cell (also referred to as an in-line sample chamber) is required.
- Standards to perform field calibration of instruments.
- Decontamination supplies.
- Logbook(s) and other forms (see Attachments B through D) or equivalent electronic form(s).
- Sample bottles.
- Sample preservation supplies (as required by the analytical methods).
- Sample tags and/or labels.
- Well construction data, location map, field data from last sampling event (if available).
- Field Sampling Plan.
- PID or FID instrument for measuring volatile organic compounds (VOCs) per the HASP.

6.7.3 Purging and Sampling Procedure

1. Open the monitoring well as stated earlier and step away. Prepare sampling equipment while allowing 3 to 5 minutes to allow the water level to reach equilibrium. In situations where VOCs are the primary contaminants of concern, air monitoring of the samplers' breathing zone areas may be required by the HASP (typically with a PID or FID).

2 Measure the water level immediately prior to placing the pump in the well and record the water level on the Low-Flow Purge Data Form or equivalent electronic form immediately prior to placing the pump or tubing into the well.

3. Lower the measuring device further into the well to collect the total depth measurement. Again wait 3 to 5 minutes to allow the well to equilibrate to the initial water level prior to placing the pump or pump intake in the well.

4. Record the total well depth on the Low-Flow Purge Data Form or equivalent electronic form immediately prior to placing the pump or tubing into the well

5. Lower the pump or tubing slowly into the well so that the pump intake is located at the center of the saturated screen length of the well. If possible, keep the pump intake at least 2 feet above the bottom of the well to minimize mobilization of sediment that may be present in the bottom of the well. Collection of turbidity-free water samples may be difficult if there is 3 feet or less of standing water in the well.

6. Start with the initial pump rate set at approximately 0.1 liter per minute. Use a graduated cylinder and stopwatch to measure the pumping rate. Adjust the pumping rates as necessary to prevent drawdown from exceeding 0.3 foot during purging. If no drawdown is noted, the pump rate may be increased (to a maximum of 0.4 liter per minute) to expedite the purging and sampling event. The pump rate will be reduced if turbidity is greater than 10 NTUs after all other field parameters have stabilized. If groundwater is drawn down below the top of the well screen, purging shall cease or the well shall be pumped to dryness and then allowed to recover before purging continues. Well recovery to 75 percent is necessary prior to sampling. Slow-recovering wells should be identified and purged at the beginning of the workday to maximize field work efficiency. If possible, samples should be collected from these wells within the same workday and no later than 24 hours after the end of purging.

7. Measure the water level in the well every 5 to 10 minutes using the water level meter. Record the well water level on the Low Flow Purge Data Form (Attachment D) or equivalent electronic form.
8. Record on the Low Flow Purge Data Form every 5 to 10 minutes the water quality parameters (pH, specific conductance, temperature, turbidity, ORP, DO, and salinity or as specified by the approved site-specific planning document) measured by the water quality meter and turbidity meter. If the cell needs to be cleaned during purging operations, continue pumping (allow the pump to discharge into a container) and disconnect the cell. Rinse the cell with distilled/deionized water. After cleaning is completed, reconnect the flow-through cell and continue purging. Document the cell cleaning on the Low-Flow Purge Data Form or equivalent electronic form.

9. Estimate the flow rate by noting the amount of discharge in a graduated cylinder per unit time using a watch with a second hand. Remeasure the flow rate any time the pump rate is adjusted and periodically during purging. This will determine if a reduction in rate has occurred due to possible battery depletion.

10. During purging, check for the presence of bubbles in the flow-through cell. The presence of bubbles is an indication that connections are not tight. If bubbles are observed, check for loose connections and tighten, repair, or replace them as necessary to achieve a tight connection.

11. Wait until stabilization is achieved, or a minimum of two saturated screen volumes have been removed and three consecutive readings, taken at 5 to 10 minute intervals, are within the following limits, then begin sampling:

    - pH ±0.2 standard units
    - Specific conductance ±10%
    - Temperature ±10%
    - Turbidity less than 10 NTUs
    - DO ±10%

12. If the above conditions have not been met after the well has been purged for 4 hours, purging will be considered complete and sampling can begin. Record the final well stabilization parameters from the Low-Flow Purge Data Form onto the Groundwater Sample Log Form or equivalent electronic form.

NOTE: VOC samples are preferably collected first, directly into pre-preserved sample containers. Fill all sample containers by allowing the pump discharge to flow gently down the inside of the container with minimal turbulence.

13. If the water column in the pump tubing collapses (water does not completely fill the tubing) before exiting the tubing, use one of the following procedures to collect VOC samples:

- Collect samples for non-VOC analyses first, then increase the flow rate incrementally until the water column completely fills the tubing, collect the sample for VOCs, and record the new flow rate.

- Reduce the diameter of the existing tubing until the water column fills the tubing either by adding a connector (Teflon or stainless steel) or clamp, which should reduce the flow rate by constricting the end of the tubing. Proceed with sample collection.

- Insert a narrow-diameter Teflon tube into the pump's tubing so that the end of the tubing is in the water column and the other end of the tubing protrudes beyond the pump's tubing, then collect the sample from the narrow diameter tubing.

- Prepare samples for shipping as per SOP SA-6.1.

7.0 REFERENCES

American Public Health Association, 1989. Standard Methods for the Examination of Water and Wastewater, 17th Edition, APHA, Washington, D.C.

Barcelona, M. J., J. P. Gibb and R. A. Miller, 1983. A Guide to the Selection of Materials for Monitoring Well Construction and Groundwater Sampling. ISWS Contract Report 327, Illinois State Water Survey, Champaign, Illinois.

Johnson Division, UOP, Inc. 1975. Ground Water and Wells, A Reference Book for the Water Well Industry. Johnson Division, UOP, Inc., Saint Paul, Minnesota.

Nielsen, D. M. and G. L. Yeates, 1985. A Comparison of Sampling Mechanisms Available for Small-Diameter Ground Water Monitoring Wells. Ground Water Monitoring Review 5:83-98.

Scalf, M. R., J. F. McNabb, W. J. Dunlap, R. L. Crosby and J. Fryberger, 1981. Manual of Ground Water Sampling Procedures. R. S. Kerr Environmental Research Laboratory, Office of Research and Development, U.S. EPA, Ada, Oklahoma.

U.S. EPA, 1979. Methods for Chemical Analysis of Water and Wastes. EPA-600/4-79-020.

U.S. EPA, 1980. Procedures Manual for Ground Water Monitoring at Solid Waste Disposal Facilities. Office of Solid Waste, United States Environmental Protection Agency, Washington, D.C.

U.S. EPA, 1994. Groundwater Sampling Procedure - Low Flow Purge and Sampling (Draft Final). U.S. Environmental Protection Agency, Region I.

U.S. Geological Survey, 1984. National Handbook of Recommended Methods for Water Data Acquisition, Chapter 5: Chemical and Physical Quality of Water and Sediment. U.S. Department of the Interior, Reston, Virginia.

ATTACHMENT A

PURGING EQUIPMENT SELECTION

Diameter Casing		Bailer	Peristaltic Pump	Vacuum Pump	Air-lift	Diaphragm "Trash" Pump	Submersible Diaphragm Pump	Submersible Electric Pump	Submersible Electric Pump w/Packer
1.25-Inch	Water level <25 feet	X	X	X	X	X			
	Water Level >25 feet	X			X				
2-Inch	Water level <25 feet	X	X	X	X	X	X		
	Water Level >25 feet	X			X		X		
4-Inch	Water level <25 feet	X	X	X	X	X	X	X	X
	Water Level >25 feet	X			X		X	X	X
6-Inch	Water level <25 feet				X	X		X	X
	Water Level >25 feet				X			X	X
8-Inch	Water level <25 feet				X	X		X	X
	Water Level >25 feet				X			X	X

ATTACHMENT A

PURGING EQUIPMENT SELECTION

PAGE 2

Manufacturer	Model Name/Number	Principle of Operation	Maximum Outside Diameter/Length (Inches)	Construction Materials (w/Lines and Tubing)	Lift Range (ft)	Delivery Rates or Volumes	1982 Price (Dollars)	Comments
BarCad Systems, Inc.	BarCad Sampler	Dedicated; gas drive (positive displacement)	1.5/16	PE, brass, nylon, aluminum oxide	0-150 with std. tubing	1 liter for each 10-15 feet of submergence	$220-350	Requires compressed gas; custom sizes and materials available; acts as piezometer.
Cole-Parmer Inst. Co.	Master Flex 7570 Portable Sampling Pump	Portable; peristaltic (suction)	<1.0/NA	(not submersible) Tygon®, silicone Viton®	0-30	670 mL/min with 7015-20 pump head	$500-600	AC/DC; variable speed control available; other models may have different flow rates.
ECO Pump Corp.	SAMPLifier	Portable; venturi	<1.5 or <2.0/NA	PP, PE, PVC, SS, Teflon®, Tefzel®	0-100	0-500 mL/min depending on lift	$400-700	AC, DC, or gasoline-driven motors available; must be primed.
Geltek Corp.	Bailer 219-4	Portable; grab (positive displacement)	1.66/38	Teflon®	No limit	1,075 mL	$120-135	Other sizes available.
GeoEngineering, Inc.	GEO-MONITOR	Dedicated; gas drive (positive displacement)	1.5/16	PE, PP, PVC, Viton®	Probably 0-150	Approximately 1 liter for each 10 feet of submergence	$185	Acts as piezometer; requires compressed gas.
Industrial and Environmental Analysts, Inc. (IEA)	Aquarius	Portable; bladder (positive displacement)	1.75/43	SS, Teflon®, Viton®	0-250	0-2,800 mL/min	$1,500-3,000	Requires compressed gas; other models available; AC, DC, manual operation possible.
IEA	Syringe Sampler	Portable; grab (positive displacement)	1.75/43	SS, Teflon®	No limit	850 mL sample volume	$1,100	Requires vacuum and/or pressure from hand pump.
Instrument Specialties Co. (ISCO)	Model 2600 Well Sampler	Portable; bladder (positive displacement)	1.75/50	PC, silicone, Teflon®, PP, PE, Detrin®, acetal	0-150	0-7,500 mL/min	$990	Requires compressed gas (40 psi minimum).
Keck Geophysical Instruments, Inc.	SP-81 Submersible Sampling Pump	Portable; helical rotor (positive displacement)	1.75/25	SS, Teflon®, PP, EPDM, Viton®	0-160	0-4,500 mL/min	$3,500	DC operated.
Leonard Mold and Die Works, Inc.	GeoFilter Small Diameter Well Pump (#0500)	Portable; bladder (positive displacement)	1.75/38	SS, Teflon®, PC, Neoprene®	0-400	0-3,500 mL/min	$1,400-1,500	Requires compressed gas (55 psi minimum); pneumatic or AC/DC control module.
Oil Recovery Systems, Inc.	Surface Sampler	Portable; grab (positive displacement)	1.75/12	acrylic, Detrin®	No limit	Approximately 250 mL	$125-160	Other materials and models available; for measuring thickness of "floating" contaminants.
Q.E.D. Environmental Systems, Inc.	Well Wizard® Monitoring System (P-100)	Dedicated; bladder (positive displacement)	1.66/36	PVC	0-230	0-2,000 mL/min	$300-400	Requires compressed gas; piezometric level indicator; other materials available.

ATTACHMENT A

PURGING EQUIPMENT SELECTION

PAGE 3

Manufacturer	Model Name/Number	Principle of Operation	Maximum Outside Diameter/Length (Inches)	Construction Materials (w/Lines and Tubing)	Lift Range (ft)	Delivery Rates or Volumes	1982 Price (Dollars)	Comments
Randolph Austin Co.	Model 500 Vari-Flow Pump	Portable; peristaltic (suction)	<0.5/NA	(Not submersible) Rubber, Tygon®, or Neoprene®	0-30	See comments	$1,200-1,300	Flow rate dependent on motor and tubing selected; AC operated; other models available.
Robert Bennett Co.	Model 180	Portable; piston (positive displacement)	1.8/22	SS, Teflon®, Delrin® PP, Viton®, acrylic, PE	0-500	0-1,800 mL/min	$2,600-2,700	Requires compressed gas; water level indicator and flow meter; custom models available.
Slope Indicator Co. (SINCO)	Model 514124 Pneumatic Water Sampler	Portable; gas drive (positive displacement)	1.9/18	PVC, nylon	0-1,100	250 mL/flushing cycle	$250-350	Requires compressed gas; SS available; piezometer model available; dedicated model available.
Solinst Canada Ltd.	5W Water Sampler	Portable; grab (positive displacement)	1.9/27	PVC, brass, nylon, Neoprene®	0-330	500 mL	$1,300-1,800	Requires compressed gas; custom models available.
TIMCO Mfg. Co., Inc.	Std. Bailer	Portable; grab (positive displacement)	1.66/Custom	PVC, PP	No limit	250 mL/ft of bailer	$20-60	Other sizes, materials, models available; optional bottom-emptying device available; no solvents used.
TIMCO	Air or Gas Lift Sampler	Portable; gas drive (positive displacement)	1.66/30	PVC, Tygon®, Teflon®	0-150	350 mL/flushing cycle	$100-200	Requires compressed gas; other sizes, materials, models available; no solvents used.
Tole Devices Co.	Sampling Pump	Portable; bladder (positive displacement)	1.38/48	SS, silicone, Delrin®, Tygon®	0-125	0-4,000 mL/min	$800-1,000	Compressed gas required; DC control module; custom built.

Construction Material Abbreviations:

- PE Polyethylene
- PP Polypropylene
- PVC Polyvinyl chloride
- SS Stainless steel
- PC Polycarbonate
- EPDM Ethylene-propylene diene (synthetic rubber)

Other Abbreviations:

- NA Not applicable
- AC Alternating current
- DC Direct current

NOTE: Other manufacturers market pumping devices which could be used for groundwater sampling, though not expressly designed for this purpose. The list is not meant to be all-inclusive and listing does not constitute endorsement for use. Information in the table is from sales literature and/or personal communication. No skimmer, scavenger-type, or high-capacity pumps are included.

Source: Barcelona et al., 1983.

ATTACHMENT B
GROUNDWATER SAMPLE LOG SHEET

Tetra Tech NUS, Inc.

GROUNDWATER SAMPLE LOG SHEET

Page___ of ___

Project Site Name: _____
Project No.: _____

[ ] Domestic Well Data
[x] Monitoring Well Data
[ ] Other Well Type: _____
[ ] QA Sample Type: _____

Sample ID No.: _____
Sample Location: _____
Sampled By: _____
C.O.C. No.: _____
Type of Sample:
[X] Low Concentration
[ ] High Concentration

SAMPLING DATA

Date:	Color	pH	S.C.	Temp.	Turbidity	DO	ORP	Other
Time:	Visual	Standard	mS/cm	Degrees C	NTU	mg/l	mV	NA
Method:								

PURGE DATA

Date:	Volume	pH	S.C.	Temp. (C)	Turbidity	DO	ORP	Other
Method:								
Monitor Reading (ppm):			SEE LOW FLOW PURGE DATA SHEET					
Well Casing Diameter & Material								
Type:								
Total Well Depth (TD):								
Static Water Level (WL):								
One Casing Volume(gal/L):								
Start Purge (hrs):								
End Purge (hrs):								
Total Purge Time (min):								
Total Vol. Purged (gal/L):								

SAMPLE COLLECTION INFORMATION

Analysis	Preservative	Container Requirements	Collected

OBSERVATIONS/NOTES

MS/MSD	Duplicate ID No.:	Signature(s):

ATTACHMENT C
EQUIPMENT CALIBRATION LOG

Tetra Tech NUS, Inc.

EQUIPMENT CALIBRATION LOG

PROJECT NAME : _____ INSTRUMENT NAME/MODEL: _____

SITE NAME: _____ MANUFACTURER: _____

PROJECT No.: _____ SERIAL NUMBER: _____

Date of Calibration	Instrument I.D. Number	Person Performing Calibration	Instrument Settings		Instrument Readings		Calibration Standard (Lot No.)	Remarks and Comments
			Pre-calibration	Post-calibration	Pre-calibration	Post-calibration		

ATTACHMENT D
LOW FLOW PURGE DATA SHEET

LOW FLOW PURGE DATA SHEET

PROJECT SITE NAME: _____ **WELL ID.:** _____
PROJECT NUMBER: _____ **DATE:** _____

Time (Hrs.)	Water Level (Ft. below TOC)	Flow (mL/Min.)	pH (S.U.)	S. Cond. (mS/cm)	Turb. (NTU)	DO (mg/L)	Temp. (Celcius)	ORP mV	Salinity % or ppt	Comments

SIGNATURE(S): _____

PAGE___OF___

TETRA TECH	STANDARD OPERATING PROCEDURES	Number SA-1.3	Page 1 of 31
		Effective Date 04/072008	Revision 9
		Applicability Tetra Tech NUS, Inc.	
		Prepared Earth Sciences Department	
Subject SOIL SAMPLING		Approved Tom Johnston T.E. Johnston	

TABLE OF CONTENTS

SECTION **PAGE**

1.0 PURPOSE **2**

2.0 SCOPE **2**

3.0 GLOSSARY **2**

4.0 RESPONSIBILITIES AND PERSONNEL QUALIFICATIONS **3**

5.0 HEALTH AND SAFETY **4**

6.0 PROCEDURES **5**

6.1 Overview 6
6.2 Soil Sample Collection 6
6.2.1 Procedure for Preserving and Collecting Soil Samples for Volatile Organic Compound Analysis 6
6.2.2 Procedure for Collecting Soil Samples for Non-Volatile Analyses 9
~~6.2.3 Procedure for Collecting Undisturbed Soil Samples ..... 10~~
~~6.3 Surface Soil Sampling ..... 13~~
~~6.4 Near-Surface Soil Sampling ..... 14~~
~~6.5 Subsurface Soil Sampling With a Hand Auger ..... 15~~
~~6.6 Subsurface Soil Sampling with a Split-Barrel Sampler ..... 17~~
6.7 Subsurface Soil Sampling Using Direct-Push Technology 18
~~6.8 Excavation and Sampling of Test Pits and Trenches ..... 18~~
~~6.8.1 Applicability ..... 18~~
~~6.8.2 Test Pit and Trench Excavation ..... 19~~
~~6.8.3 Sampling in Test Pits and Trenches ..... 21~~
~~6.8.4 Backfilling of Trenches and Test Pits ..... 25~~
6.9 Records 25

7.0 REFERENCES **26**

ATTACHMENTS

A SOIL & SEDIMENT SAMPLE LOG SHEET **28**
B SPLIT-SPOON SAMPLER **29**
C TEST PIT LOG **30**
D REMOTE SAMPLE HOLDER FOR TEST PIT/TRENCH SAMPLING **31**

1.0 PURPOSE

This Standard Operating Procedure (SOP) describes the procedures to be used to collect surface, near-surface, and subsurface soil samples. Additionally, it describes the methods for sampling of test pits and trenches to determine subsurface soil and rock conditions and for recovery of small-volume or bulk samples from pits.

2.0 SCOPE

This document applies to the collection of surface, near-surface, and subsurface soil samples exposed through hand digging, hand augering, drilling, or machine excavating at hazardous substance sites for laboratory testing, onsite visual examination, and onsite testing.

3.0 GLOSSARY

Composite Sample - A composite sample is a combination of more than one grab sample from various locations and/or depths and times that is homogenized and treated as one sample. This type of sample is usually collected when determination of an average waste concentration for a specific area is required. Composite samples shall not be collected for volatile organics analysis.

Confined Space - As stipulated in 29 Code of Federal Regulations (CFR) 1910.146, a confined space means a space that: (1) is large enough and so configured that an employee can bodily enter and perform assigned work; (2) has limited or restricted means for entry or exit (e.g., tanks, vessels, silos, storage bins, hoppers, vaults, pits, and excavations); and (3) is not designed for continuous employee occupancy. TtNUS considers all confined space as permit-required confined spaces.

Grab Sample - One sample collected at one location and at one specific time.

Hand Auger - A sampling device used to extract soil from the ground.

Representativeness – A qualitative description of the degree to which an individual sample accurately reflects population characteristics or parameter variations at a sampling point. It is therefore an important characteristic not only of assessment and quantification of environmental threats posed by the site, but also for providing information for engineering design and construction. Proper sample location selection and proper sample collection methods are important to ensure that a truly representative sample has been collected.

Sample for Non-Volatile Analyses - Includes all chemical parameters other than volatile organics (e.g., semivolatiles, pesticides/PCBs, metals, etc.) and those engineering parameters that do not require undisturbed soil for their analysis.

Split-Barrel Sampler - A steel tube, split in half lengthwise, with the halves held together by threaded collars at either end of the tube. Also called a split-spoon sampler, this device can be driven into resistant materials using a drive weight mounted in the drilling string. A standard split-barrel sampler is typically available in two common lengths, providing either 20-inch or 26-inch longitudinal clearance for obtaining 18-inch or 24-inch-long samples, respectively. These split-barrel samplers commonly range in size from 2 to 3.5 inches OD. The larger sizes are commonly used when a larger volume of sample material is required (see Attachment B).

Test Pit and Trench - Open, shallow excavations, typically rectangular (if a test pit) or longitudinal (if a trench), excavated to determine shallow subsurface conditions for engineering, geological, and soil chemistry exploration and/or sampling purposes. These pits are excavated manually or by machine (e.g., backhoe, clamshell, trencher, excavator, or bulldozer).

Thin-Walled Tube Sampler - A thin-walled metal tube (also called a Shelby tube) used to recover relatively undisturbed soil samples. These tubes are available in various sizes, ranging from 2 to 5 inches outside diameter (OD) and from 18 to 54 inches in length.

4.0 RESPONSIBILITIES AND PERSONNEL QUALIFICATIONS

Project Manager - The Project Manager is responsible for determining the sampling objectives, selecting proposed sampling locations, and selecting field procedures used in the collection of soil samples. Additionally, in consultation with other project personnel (geologist, hydrogeologist, etc.), the Project Manager establishes the need for test pits or trenches and determines their approximate locations and dimensions.

Site Safety Officer (SSO) - The SSO (or a qualified designee) is responsible for providing the technical support necessary to implement the project Health and Safety Plan. This will include (but not be limited to) performing air quality monitoring during sampling, boring, and excavation activities and to ensure that workers and offsite (downwind) individuals are not exposed to hazardous levels of airborne contaminants. The SSO/designee may also be required to advise the FOL on other safety-related matters regarding boring, excavation, and sampling, such as mitigative measures to address potential hazards from unstable trench walls, puncturing of drums or other hazardous objects, etc.

Field Operations Leader (FOL) - This individual is primarily responsible for the execution of the planning document containing the Sampling and Analysis Plan (SAP). This is accomplished through management of a field sampling team for the proper acquisition of samples. He or she is responsible for the supervision of onsite analyses; ensuring proper instrument calibration, care, and maintenance; sample collection and handling; the completion and accuracy of all field documentation; and making sure that custody of all samples obtained is maintained according to proper procedures. When appropriate and as directed by the FOL, such responsibilities may be performed by other qualified personnel (e.g., field technicians) where credentials and time permit. The FOL is responsible for finalizing the locations for collection of surface, near-surface, and subsurface (hand and machine borings, test pits/trenches) soil samples. He/she is ultimately responsible for the sampling and backfilling of boreholes, test pits, and trenches and for adherence to Occupational Safety and Health Administration (OSHA) regulations during these operations through self acquisition or through the management of a field team of samplers.

Project Geologist/Sampler - The project geologist/sampler is responsible for the proper acquisition of samples in accordance with this SOP and/or other project-specific documents. In addition, this individual is responsible for the completion of all required paperwork (e.g., sample log sheets, field notebook, boring logs, test pit logs, container labels, custody seals, and chain-of-custody forms) associated with the collection of those samples.

Competent Person - A Competent Person, as defined in 29 CFR 1929.650 of Subpart P - Excavations, means one who is capable of identifying existing and predictable hazards in the surroundings, or working conditions that are unsanitary, hazardous, or dangerous to employees, and who has authorization to take prompt corrective measures to eliminate them.

General personnel qualifications for groundwater sample collection and onsite water quality testing include the following:

- Occupational Safety and Health Administration (OSHA) 40-hour and applicable refresher training.
- Capability of performing field work under the expected physical and environmental (i.e., weather) conditions.

- Familiarity with appropriate procedures for sample documentation, handling, packaging, and shipping.

5.0 HEALTH AND SAFETY

Health and safety precautions are identified for individual sample collection procedures throughout this SOP. In addition to those precautions, the following general hazards may be incurred during sampling activities:

- Knee injuries from kneeling on hard or uneven surfaces
- Slips, trips, and falls
- Cuts and lacerations
- Traffic hazards associated with sampling in parking areas, along roadways and highways.

Methods of avoiding these hazards are provided below.

Knee injuries – If kneeling is required during soil sampling, this could result in knee injuries from stones/foreign objects and general damage due to stress on the joints. To minimize this hazard:

- Clear any foreign objects from the work area.
- Wear hard-sided knee pads.
- Stretch ligaments, tendons and muscles before, during and after. Take breaks as frequently as necessary.
- Report pre-existing conditions to the SSO if you feel this activity will aggravate an existing condition.

Slips, Trips, and Falls – These hazards exist while traversing varying terrains carrying equipment to sample locations. To minimize these hazards:

- Pre-survey sampling locations. Eliminate, barricade, or otherwise mark physical hazards leading to the locations.
- Carry small loads that do not restrict the field of vision.
- Travel the safest and clearest route (not necessarily the shortest).

Cuts and Lacerations - To prevent cuts and lacerations associated with soil sampling, the following provisions are required:

- Always cut away from yourself and others when cutting tubing or rope. This will prevent injury to yourself and others if the knife slips.
- Do not place items to be cut in your hand or on your knee.
- Change blades as necessary to maintain a sharp cutting edge. Many accidents result from struggling with dull cutting attachments.

- Whenever practical, wear cut-resistant gloves (e.g., leather or heavy cotton work gloves) at least on the hand not using the knife.
- Keep cutting surfaces clean and smooth.
- Secure items to be cut – do not hold them against the opposing hand, a leg, or other body part.
- When transporting glassware, keep it in a hard-sided container such as a cooler so that if there is a fall, you will be less likely to get cut by broken glass.
- DO NOT throw broken sample jars or glass ampoules into garbage bags. Place broken glass and glass ampoules in hard-sided containers such as a cardboard box or directly into a dumpster. DO NOT reach into garbage bags to retrieve any item accidentally thrown away. Empty the contents onto a flat surface to avoid punctures and lacerations from reaching where you cannot see.

Vehicular and Foot Traffic Hazards – When sampling along the roadway or near traffic patterns, follow the following precautions:

- Motorists may be distracted by onsite activities – ASSUME THEY DO NOT SEE YOU OR MEMBERS OF YOUR FIELD CREW.
- DO NOT place obstructions (such as vehicles) along the sides of the road that may cause site personnel to move into the flow of traffic to avoid your activities or equipment or that will create a blind spot.
- **Provide a required free space of travel**. Maintain at least 6 feet of space between you and moving traffic. Where this is not possible, use flaggers and/or signs to warn oncoming traffic of activities near or within the travel lanes.
- Face Traffic. Whenever feasible, if you must move within the 6 feet of the required free space or into traffic, attempt to face moving traffic at all times. Always leave yourself an escape route.
- Wear high-visibility vests to increase visual recognition by motorists.
- Do not rely on the vehicle operator's visibility, judgment, or ability. Make eye contact with the driver. Carefully and deliberately use hand signals so they will not startle or confuse motorists or be mistaken for a flagger's direction before moving into traffic.
- Your movements may startle a motorist and cause an accident, so move deliberately. Do not make sudden movements that might confuse a motorist.

6.0 PROCEDURES

The following procedures address surface and subsurface sampling.

CAUTION

Each situation must be evaluated individually to determine the applicability and necessity for obtaining a utility clearance ticket/dig permit. Common sense dictates, prior to digging or boring with power equipment, no matter what the depth, or digging by hand in a manner that could damage unprotected underground utilities, that a dig permit is required. See SOP HS-1.0, Utility Locating and Excavation Clearance, for additional clarification. If you do not know or are unsure as to whether a ticket is necessary – **Get the Ticket.**

6.1 Overview

Soil sampling is an important adjunct to groundwater monitoring. Sampling of the soil horizons above the groundwater table can detect contaminants before they migrate to the water table, and can establish the amount of contamination absorbed or adsorbed on aquifer solids that have the potential of contributing to groundwater contamination.

Soil types can vary considerably on a hazardous waste site. These variations, along with vegetation, can affect the rate of contaminant migration through the soil. It is important, therefore, that a detailed record be maintained during sampling operations, particularly noting sampling locations, depths, and such characteristics as grain size, color, and odor. Subsurface conditions are often stable on a daily basis and may demonstrate only slight seasonal variation especially with respect to temperature, available oxygen and light penetration. Changes in any of these conditions can radically alter the rate of chemical reactions or the associated microbiological community, thus further altering specific site conditions. Certain vegetation species can create degradation products that can alter contaminant concentrations in soil. This is why vegetation types and extent of degradation of this foliage must be recorded. To prevent degradation, samples must be kept at their at-depth temperature or lower, protected from direct light, sealed tightly in approved glass containers, and be analyzed as soon as possible after collection. In addition, to the extent possible, vegetation should be removed from the sample.

The physical properties of the soil, its grain size, cohesiveness, associated moisture, and such factors as depth to bedrock and water table, will limit the depth from which samples can be collected and the method required to collect them. It is the intent of this document to present the most commonly employed soil sampling methods used at hazardous waste sites.

6.2 Soil Sample Collection

6.2.1 Procedure for Preserving and Collecting Soil Samples for Volatile Organic Compound Analysis

Samples collected using traditional methods such as collection in a jar with no preservation have been known to yield non-representative samples due to loss of volatile organic compounds (VOCs). To prevent such losses, preservation of samples with methanol or sodium bisulfate may be used to minimize volatilization and biodegradation. This preservation may be performed either in the field or laboratory, depending on the sampling methodology employed. Because of the large number of sampling methods and associated equipment required, careful coordination between field and laboratory personnel is needed.

Soil samples to be preserved by the laboratory are currently being collected using Method SW-846, 5035. For samples preserved in the field, laboratories are currently performing low-level analyses (sodium bisulfate preservation) and high- to medium-level analyses (methanol preservation) depending on the needs of the end user.

The following procedures outline the necessary steps for collecting soil samples to be preserved at the laboratory, and for collecting soil samples to be preserved in the field with methanol or sodium bisulfate.

6.2.1.1 Soil Samples to be Preserved at the Laboratory

Soil samples collected for volatile organic analysis that are to be preserved at the laboratory shall be obtained using a hermetically sealed sample vial such as an EnCore™ sampler. Each sample shall be

obtained using a reusable sampling handle (T-handle) that can be provided with the EnCore™ sampler when requested and purchased. Collect the sample in the following manner for each EnCore™ sampler:

1. Scene Safety - Evaluate the area where sampling will occur. Ensure that the area is safe from physical, chemical, and natural hazards. Clear or barricade those hazards that have been identified.

2. Wear the appropriate personal protective equipment (PPE). This will include, at a minimum, safety glasses and nitrile surgeon's gloves. If you must kneel on the ground or place equipment on the surface being sampled, cover the ground surface with plastic to minimize surface contamination of your equipment and clothing. Wear knee pads to protect your knees from kneeling on hard or uneven surfaces.

3. Load the Encore™ sampler into the T-handle with the plunger fully depressed.

4. Expose the area to be sampled using a hand trowel or similar device to remove surface debris.

5. Press the T-handle against the freshly exposed soil surface, forcing soil into the sampler. The plunger will be forced upward as the cavity fills with soil.

6. When the sampler is full, rotate the plunger and lock it into place. If the plunger does not lock, the sampler is not full. This method ensures there is no headspace. Soft soil may require several plunges or forcing soil against a hard surface such as a sample trowel to ensure that headspace is eliminated.

7. Use a paper towel to remove soil from the side of the sampler so a tight seal can be made between the sample cap and the rubber O-ring.

8. With soil slightly piled above the rim of the sampler, force the cap on until the catches hook the side of the sampler.

9. Remove any surface soil from the outside of the sampler and place in the foil bag provided with the sampler. Good work hygiene practices and diligent decontamination procedures prevents the spread of contamination even on the outside of the containers.

10. Label the bag with appropriate information in accordance with SOP SA-6.3.

11. Place the full sampler inside a lined cooler with ice and cool to 4°C ± 2 °C. Make sure any required trip blanks and temperature blanks are also in the cooler. Secure custody of the cooler in accordance with SOP SA-6.3.

12. Typically, collect three Encore™ samplers at each location. Consult the SAP or laboratory to determine the required number of Encore™ samplers to be collected.

13. The T-handle shall be decontaminated before moving to the next interval or location using a soap and water wash and rinse, and where applicable, the selected solvent as defined in the project planning documents.

Using this type of sampling device eliminates the need for field preservation and the shipping restrictions associated with preservatives. A complete set of instructions is included with each Encore™ sampler.

After the Encore™samples are collected, they should be placed on ice immediately and delivered to the laboratory within 48 hours (following the chain-of-custody and documentation procedures outlined in SOP SA-6.1). Samples must be preserved by the laboratory within 48 hours of sample collection.

6.2.1.2 Soil Samples to be Preserved in the Field

Soil samples preserved in the field may be prepared for analyses using both the low-level (sodium bisulfate preservation) and high- to medium-level (methanol preservation) methods.

Safety Reminder

When using chemicals in the field to preserve samples, the FOL and/or SSO must ensure that Materials Safety Data Sheets (MSDSs) have been provided with the chemicals to be used. They also must ensure that these chemicals have been added to the Chemical Inventory List contained within Section 5.0, Hazard Communication, of your Health and Safety Guidance Manual (HSGM). Lastly, but most importantly, the FOL and/or SSO must review the hazards with personnel using these chemicals and ensure that provisions are available for recommended PPE and emergency measures (e.g., eyewash, etc.).

Methanol Preservation (High to Medium Level):

Bottles may be pre-spiked with methanol in the laboratory or prepared in the field. Soil samples to be preserved in the field with methanol shall utilize 40 to 60 mL glass vials with septum-lined lids. Each sample bottle shall be filled with 25 mL of demonstrated analyte-free purge-and-trap grade methanol. The preferred method for adding methanol to the sample bottle is by removing the lid and using a pipette or scaled syringe to add the methanol directly to the bottle.

CAUTION

NEVER attempt to pipette by mouth

In situations where personnel are required to spike the septum using a hypodermic needle, the following provisions for handling sharps must be in place:

- Training of personnel regarding methods for handling of sharps
- Hard-sided containers for the disposal of sharps
- Provisions for treatment in cases where persons have received a puncture wound

Soil shall be collected with the use of a decontaminated (or disposable), small-diameter coring device such as a disposable tube/plunger-type syringe with the tip cut off. The outside diameter of the coring device must be smaller than the inside diameter of the sample bottle neck.

A small electronic balance or manual scale will be necessary for measuring the volume of soil to be added to the methanol-preserved sample bottle. Calibration of the scale shall be performed prior to use and intermittently throughout the day according to the manufacturer's requirements.

The sample should be collected as follows:

1. Weigh the unused syringe and plunger to the nearest 0.01 gram.
2. Pull the plunger back and insert the syringe into the soil to be sampled.
3. Collect 8 to 12 grams of soil by pushing the syringe barrel into the soil.
4. Weigh the sample and adjust until obtaining the required amount of sample.

5. Record the sample weight to the nearest 0.01 gram in the field logbook and/or on the sample log sheet.

6. Extrude the weighed soil sample into the methanol-preserved sample bottle taking care not to contact the sample container with the syringe.

7. If dirty, wipe soil particles from the threads of the bottle and cap. Cap the bottle tightly.

8. After capping the bottle, swirl the sample (do not shake) in the methanol and break up the soil such that all of the soil is covered with methanol.

9. Place the sample on ice immediately and prepare for shipment to the laboratory as described in SOP SA-6.1.

Sodium Bisulfate Preservation (Low Level):

> ***CAUTION***
> Care should be taken when adding the soil to the sodium bisulfate solution. A chemical reaction of soil containing carbonates (limestone) may cause the sample to effervesce or the vial to possibly explode. To avoid this hazard or hazards of this type, a small sample aliquot should be subjected to the sample preservative. If it effervesces in an open air environment, utilize an alternative method such as Encore™ or 2-ounce jar.

Bottles may be prepared in the laboratory or in the field with sodium bisulfate solution. Samples to be preserved in the field using the sodium bisulfate method are to be prepared and collected as follows:

1. Add 1 gram of sodium bisulfate to 5 mL of laboratory-grade deionized water in a 40 to 60 mL glass vial with septum-lined lid.

2. Collect the soil sample and record the sample weight to the nearest 0.01 gram in the field logbook or on the sample log sheet as described for methanol preservation

3. Add the weighed sample to the sample vial.

4. Collect duplicate samples using the methanol preservation method on a one-for-one sample basis because it is necessary for the laboratory to perform both low-level and medium-level analyses.

5. Place the samples on ice immediately and prepare for shipment to the laboratory as described in SOP SA-6.1.

> ***NOTE***
> If lower detection limits are necessary, an option to field preserving with sodium bisulfate may be to collect EnCore™ samplers at a given sample location. Consult the planning documents to determine whether this is required. If it is, collect samples in accordance with the Encore™ sampling procedure above and then send all samplers to the laboratory to perform the required preservation and analyses.

6.2.2 Procedure for Collecting Soil Samples for Non-Volatile Analyses

Samples collected for non-volatile analyses may be collected as either grab or composite samples as follows:

1. With a stainless steel trowel or other approved tool, transfer a portion of soil to be sampled to a stainless steel bowl or disposable inert plastic tray.

2. Remove roots, vegetation, sticks, and stones larger than the size of a green pea.

3. Thoroughly mix the soil in the bowl or tray to obtain as uniform a texture and color as practicable. The soil type, moisture content, amount of vegetation, and other factors may affect the amount of time required to obtain a properly mixed sample. In some cases, it may be impossible to obtain a uniform sample appearance. Use the field logbook to describe any significant difficulties encountered in obtaining a uniform mixture.

4. Transfer the mixed soil to the appropriate sample containers and close the containers.

5. Label the sample containers in accordance with SOP SA-6.3.

6. Place the containers in a cooler of ice as soon after collection as possible.

7. Prepare the sample shipment and ship the samples in accordance with SOP SA-6.1.

> ***NOTE***
> Cooling may not be required for some samples depending on the scheduled analyses. Consult the planning documents if in doubt regarding correct sample preservation conditions. When in doubt – Cool to 4°C.

> ***NOTE***
> Head space is permitted in soil sample containers for non-volatile analyses to allow for sample expansion.

6.2.3 Procedure for Collecting Undisturbed Soil Samples

> ***NOTE***
> Use of thin-walled undisturbed tube samplers is restricted by the consistency of the soil to be sampled. Often, very loose and/or wet samples cannot be retrieved by the samplers, and soil with a consistency in excess of very stiff cannot be penetrated by the sampler. Devices such as Dennison or Pitcher core samplers can be used to obtain undisturbed samples of stiff soil. Using these devices normally increases sampling costs, and therefore their use should be weighed against the need for acquiring an undisturbed sample. These devices are not discussed in this SOP because they are not commonly used.

When it is necessary to acquire undisturbed samples of soil for purposes of engineering parameter analysis (e.g., permeability), a thin-walled, seamless tube sampler (Shelby tube) shall be employed using the following collection procedure:

1. In preparation for sampling utilizing a drill rig, field personnel must complete the following activities:

   - Ensure that all subsurface drilling activities are preceded by a utility clearance for the area to be investigated. This includes activities described in SOP HS-1.0, Utility Location and Excavation Clearance, as well as any location-specific procedures that may apply.

REMEMBER

If you are digging near a marked utility (within the diameter of an underground utility that has been marked plus 18 inches), you must first locate the utility through vacuum extraction or hand digging to ensure that your activities will not damage the utility.

- Complete an Equipment Inspection Checklist for the drill rig or direct-push technology (DPT) rig. This checklist will be provided in the HASP.
- Review the Safe Work Permit prior to conducting the activity.
- Review the activity to be conducted.

2. Remove all surface debris (e.g., vegetation, roots, twigs, etc.) from the specific sampling location and drill and/or clean out the borehole to the desired sampling depth. Be careful to minimize potential disturbance of the material to be sampled. In saturated material, withdraw the drill bit slowly to prevent loosening of the soil around the borehole and to maintain the water level in the hole at or above groundwater level.

CAUTION

The use of bottom-discharge bits or jetting through an open-tube sampler to clean out the borehole shall not be allowed. Only the use of side-discharge bits is permitted.

3. Determine whether a stationary piston-type sampler is required to limit sample disturbance and aid in retaining the sample. Either the hydraulically operated or control rod activated-type of stationary piston sampler may be used.

4. Prior to inserting the tube sampler into the borehole, check to ensure that the sampler head contains a check valve. The check valve is necessary to keep water in the rods from pushing the sample out the tube sampler during sample withdrawal. In addition, the check valve maintains a positive suction within the tube to help retain the sample.

5. A stainless steel tube sampler is typically used to minimize chemical reaction between the sample and the sampling tube.

6. With the sampling tube resting on the bottom of the hole and the water level in the boring at groundwater level or above, push the tube into the soil with a continuous and rapid motion, without impacting or twisting. If the soil is too hard to penetrate by pushing alone, careful hammering may be used by minimizing drop distance (tapping) of the hammer. Before pulling the tube, turn it at least one revolution to shear the sample off at the bottom. In no case shall the tube be pushed farther than the length provided for the soil sample. Allow about 3 inches in the tube for cuttings and sludge.

7. Upon removal of the sampling tube from the hole, measure the length of sample in the tube and also the length penetrated.

8. Remove disturbed material in the upper end of the tube and measure the length of sample again.

9. After removing at least 1 inch of soil from the lower end, place enough packing material (clean inert material such as paper or cloth) tightly in each end of the Shelby tube and then pour melted wax into each end to make at least a ½-inch wax plug and then add more packing material to fill the voids at both ends.

10. Place plastic caps on the ends, tape the caps in place, and dip the ends in wax to prevent loss of soil.

11. Affix label(s) to the tube as required and record sample number, depth, penetration, and recovery length on the label.

12. Mark the "up" direction on the side and upper end of the tube with indelible ink.

13. Complete a chain-of-custody form (see SOP SA-6.3) and other required forms (including Attachment A of this SOP).

14. Ship samples protected with suitable resilient packing material to reduce shock, vibration, and disturbance.

CAUTION

To preserve sample integrity do not allow tubes to freeze, and store the samples vertically with the same orientation they had in the ground, (i.e., top of sample is up) in a cool place out of the sun at all times.

CAUTION

A primary concern in the preparation of the wax plugs is the potential for the heat source and melted wax to cause a fire and/or burns. Follow the directions below to prevent injury or fire.

Electrical Heating

Using hot plates to melt the wax is acceptable. In an outdoor setting, make sure a Ground Fault Circuit Interrupter (GFCI) is employed within the electrical circuit. If a portable generator is used, ensure that the generator is an adequate distance from the sampling operation (at least 50 feet). Ensure that the extension cord is rated for the intended load and for outdoor use and is free from recognizable damage. Ensure flammable preservatives are not employed or stored near the hot plate. Although a Hot Work Permit is not required, scene safety evaluation by site personnel of the above elements is. As always, if a fire potential exists, the provisions for extinguishing must be immediately accessible as well as any provisions for first aid measures.

Open Flame

If an open flame is used, the following provisions are necessary:

- Complete a Hot Work Permit and any local permit required for elevated temperature applications. The Hot Work Permit, provided in your HASP, will aid the FOL and/or the SSO in ensuring that fire protection provisions (extinguishers, fire watches, etc.) are in place as well as ensuring that local requirements have been addressed.

- Ensure that water is available to address any wax splashes or contact. If possible, immerse the contacted area. Where this is not possible, run water over the area and apply cold compresses. The need for medical attention or first aid shall be determined on site under the direction of the SSO.

6.3 Surface Soil Sampling

The simplest, most direct method of collecting surface soil samples for subsequent analysis is by use of a stainless steel shovel, hand auger, soil corer, or stainless steel or disposable plastic trowel.

> ***NOTE***
> Multiple depth intervals are used to describe surface soil. Sometimes surface soil is defined as soil from 0 to 2 inches below ground surface (bgs), and sometimes it is defined as soil from other depths such as 0 to 2 feet bgs. Ensure that the definition of surface soil depth is clear before collecting surface soil samples.
>
> For the purposes of instruction, the terms "surface soil" and "near-surface soil" are used in this SOP as follows:
>
> - Surface soil - 0 to 6 inches bgs
> - Near-surface soil - 6 to 18 inches bgs
>
> If these intervals are defined differently in the planning documents, substitute the appropriate depth ranges.

In general, the following equipment is necessary for obtaining surface soil samples:

- Stainless steel or pre-cleaned disposable trowel.
- Stainless steel hand auger, soil corer, or shovel.
- Real-time air monitoring instrument (e.g., PID, FID) as directed in project planning document.
- Required PPE.
  - Nitrile surgeon's or latex gloves may be used, layered as necessary.
  - Safety glasses
  - Other – Items identified on the Safe Work Permit may be required based on location-specific requirements such as hearing protection, steel-toed work boots, and a hard hat when working near a drill rig. These provisions will be listed in the HASP or directed by the FOL and/or SSO.

> ***Safety Reminder***
> The use of latex products may elicit an allergic reaction in some people. Should this occur, remove the latex gloves, treat for an allergic reaction, and seek medical attention as necessary.

- Required paperwork (see SOP SA-6.3 and Attachment A of this SOP)
- Required decontamination equipment
- Required sample container(s)
- Wooden stakes or pin flags

- Sealable polyethylene bags (e.g., Ziploc® baggies)
- Heavy duty cooler
- Ice
- Chain-of-custody records and custody seals

When acquiring surface soil samples, use the following procedure:

1. Place padding or use knee pads when kneeling near the sample location. If necessary, place plastic sheeting to provide a clean surface for sample equipment to avoid possible cross- contamination.
2. Carefully remove vegetation, roots, twigs, litter, etc. to expose an adequate soil surface area to accommodate sample volume requirements.
3. Using a precleaned syringe or EnCore™ samplers, follow the procedure in Section 6.2.1 for collecting surface soil samples for volatile analysis. Surface soil samples for volatile organic analysis should be collected deeper than 6 inches bgs because shallower material has usually lost most of the volatiles through evaporation. Ensure that the appropriate surface soil depth is being analyzed in accordance with the planning document.
4. Using decontaminated sampling tools, thoroughly mix in place a sufficient amount of soil to fill the remaining sample containers. See Section 6.5 of this procedure for hand auger instruction, as needed.
5. Transfer the sample into those containers utilizing a stainless steel trowel.
6. Cap and securely tighten all sample containers.
7. Affix a sample label to each container. Be sure to fill out each label carefully and clearly, addressing all the categories described in SOP SA-6.3.
8. Proceed with the handling and processing of each sample container as described in SOP SA-6.2.
9. Site restoration – Whenever removing sample materials, always restore the surface. It is our intent to leave the area better than we found it. Do NOT create trip hazards in areas when pedestrian traffic may exist.

6.4 Near-Surface Soil Sampling

Collection of samples from near the surface (depth of 6 to 18 inches) can be accomplished with tools such as shovels, hand auger, soil corers, and stainless steel or pre-cleaned disposable trowels and the equipment listed under Section 6.5 of this procedure.

To obtain near-surface soil samples, the following protocol shall be used:

1. With a clean shovel, make a series of vertical cuts in the soil to the depth required to form a square approximately 1 foot by 1 foot.
2. Lever out the formed plug and scrape the bottom of the freshly dug hole with a decontaminated stainless steel or pre-cleaned disposable trowel to remove any loose soil.

3. Follow steps 1 through 9 of Section 6.3.

6.5 Subsurface Soil Sampling With a Hand Auger

A hand augering system generally consists of a variety of stainless steel bucket bits (approximately 6.5 inches long and 2, 2.75, 3.25, and 4 inches in diameter), series of extension rods (available in 2-, 3-, 4- and 5-inch lengths), and a T-handle connected to extension rods and to the auger bucket. A larger-diameter bucket bit is commonly used to bore a hole to the desired sampling depth and then it is withdrawn. The larger-diameter bit is then replaced with a smaller-diameter bit, lowered down the hole, and slowly turned into the soil to the completion depth (approximately 6 inches). The apparatus is then withdrawn and the soil sample collected.

The hand auger can be used in a wide variety of soil conditions. It can be used to sample soil either from the surface, or to depths in excess of 12 feet. However, the presence of subsurface rocks and landfill material and collapse of the borehole normally limit sampling depth.

To accomplish soil sampling using a hand augering system, the following equipment is required:

- Complete hand auger assembly (variety of bucket bit sizes)
- Stainless steel mixing bowls
- The equipment listed in Section 6.3
- Miscellaneous hand tools as required to assemble and disassemble the hand auger units

CAUTION

Potential hazards associated with hand augering include:

- Muscle strain and sprain due to over twisting and/or over compromising yourself.
- Equipment failure due to excessive stress on the T-handle or rods through twisting. Failure of any of these components will result in a sudden release and potential injury due to that failure.

As in all situations, any intrusive activities that could damage underground utilities shall be proceeded by a Dig/Excavation permit/ticket. Call the Utility Locating service in the area or your Project Health and Safety Officer for more information. When in doubt – **Get the Ticket!**

To obtain soil samples using a hand auger, use the following procedure:

1. Wearing designated PPE, attach a properly decontaminated bucket bit to a clean extension rod and attach the T-handle to the extension rod.
2. Clear the area to be sampled of any surface debris (vegetation, twigs, rocks, litter, etc.).
3. Twist the bucket into the ground while pushing vertically downward on the auger. The cutting shoes fill the bucket as it is advanced into the ground.
4. As the auger bucket fills with soil, periodically remove any unneeded soil.

5. Add rod extensions as necessary to extend the reach of the auger. Also, note (in a field notebook, boring log, and/or on a standardized data sheet) any changes in the color, texture or odor of the soil as a function of depth. The project-specific planning document (SAP, HASP, etc.) describe requirements for scanning the soil with a real-time air monitoring instrument (e.g., PID, FID, etc.) and recording the measurements.

6. After reaching the desired depth (e.g., the top of the interval to be sampled), slowly and carefully withdraw the apparatus from the borehole to prevent or minimize movement of soil from shallower intervals to the bottom of the hole.

7. Remove the soiled bucket bit from the rod extension and replace it with another properly decontaminated bucket bit. The bucket bit used for sampling is to be smaller in diameter than the bucket bit employed to initiate the borehole.

8. Carefully lower the apparatus down the borehole. Care must be taken to avoid scraping the borehole sides.

9. Slowly turn the apparatus until the bucket bit is advanced approximately 6 inches.

10. Discard the top of the core (approximately 1 inch), which represents any loose material collected by the bucket bit before penetrating the sample material.

11. Using a precleaned syringe or EnCore™ samplers, follow the procedure in Section 6.2.1 for collecting a soil sample for volatile compound analysis directly from the bucket bit.
12. Utilizing a properly decontaminated stainless steel trowel or dedicated disposable trowel, remove the remaining sample material from the bucket bit and place into a properly decontaminated stainless steel mixing bowl.

13. Homogenize the sample material as thoroughly as practicable then fill the remaining sample containers. Refer to Section 6.2.2.

14. Follow steps 4 through 7 listed in Section 6.3.

6.5.1 Sampling Using Stainless Steel Soil Corers

A soil corer is a stainless steel tube equipped with a cutting shoe and sample window in the side. The soil corer is advanced into the soil by applying downward pressure (body weight). The soil is unloaded by then forcing a ram towards the cutting shoe, which results in the discharge of the soil core through a window in the sleeve.

Use, application, and sample protocol is the same as for hand augering provided above, but without necessarily rotating the corer while advancing it.

SAFETY REMINDER

Hand augering and soil corer sampling can be physically demanding based on the type of geology and subsurface encumbrances encountered. Soil coring has some added hazards such the corer collapsing under your weight. To reduce the potential for muscle strain and damage, the following measures will be incorporated:

- Stretch and limber your muscles before heavy exertion. This hazard becomes more predominant in the early morning hours (prior to muscles becoming limber) and later in the day (as a result of fatigue).

- Job rotation – Share the duties so that repetitive actions do not result in fatigue and injury.

- Increase break frequencies as needed, especially as ambient conditions of heat and/or cold stress may dictate.

- Do not force the hand tools or use cheater pipes or similar devices to bypass an obstruction. Move to another location near the sampling point. Exerting additional forces on the sampling devices can result in damage and/or failure that could potentially injure someone in the immediate vicinity.

- Do not over compromise yourself when applying force to the soil corer or hand auger. If there is a sudden release, it could result in a fall or muscle injury due to strain.

6.6 Subsurface Soil Sampling with a Split-Barrel Sampler

A split-barrel (split-spoon) sampler consists of a heavy carbon steel or stainless steel sampling tube that can be split into two equal halves to reveal the soil sample (see Attachment B). A drive head is attached to the upper end of the tube and serves as a point of attachment for the drill rod. A removable tapered nosepiece/drive shoe attaches to the lower end of the tube and facilitates cutting. A basket-like sample retainer can be fitted to the lower end of the split tube to hold loose, dry soil samples in the tube when the sampler is removed from the drill hole. This split-barrel sampler is made to be attached to a drill rod and forced into the ground by means of a 140-pound or larger casing driver.

Safety Reminder

It is intended through the Equipment Inspection for Drill Rigs form provided in the HASP that the hammer and hemp rope, where applicable, associated with this activity will be inspected (no physical damage is obvious), properly attached to the hammer (suitable knots or sufficient mechanical devices), and is in overall good condition.

Split-barrel samplers are used to collect soil samples from a wide variety of soil types and from depths greater than those attainable with other soil sampling equipment.

The following equipment is used for obtaining split-barrel samples:

- Drilling equipment (provided by subcontractor).
- Split-barrel samplers (2-inch OD, 1-3/8-inch ID, either 20 inches or 26 inches long); Larger OD samplers are available if a larger volume of sample is needed.
- Drive weight assembly, 140-pound weight, driving head, and guide permitting free fall of 30 inches.
- Stainless steel mixing bowls.
- Equipment listed in Section 6.3.

The following steps shall be followed to obtain split-barrel samples (Steps 1 through 4 are typically performed by the drilling subcontractor):

1. Attach the split-barrel sampler to the sampling rods.

2. Lower the sampler into the borehole inside the hollow stem auger bits.

3. Advance the split-barrel sampler by hammering the length (typically 18 or 24 inches) of the split-barrel sampler into the soil using 140-pound or larger hammer.

4. When the desired depth is achieved, extract the drill rods and sampler from the augers and/or borehole.

5. Detach the sampler from the drill rods.

6. Place the sampler securely in a vise so it can be opened using pipe wrenches.

> ***CAUTION***
> Pipe wrenches are used to separate the split spoon into several components. The driller's helper should not apply excessive force through the use of cheater pipes or push or pull in the direction where, if the wrench slips, hands or fingers will be trapped against an immovable object.

7. Remove the drive head and nosepiece with the wrenches, and open the sampler to reveal the soil sample.

8. Immediately scan the sample core with a real-time air monitoring instrument (e.g., FID, PID, etc.) (as project-specific planning documents dictate). Carefully separate (or cut) the soil core, with a decontaminated stainless steel knife or trowel, at about 6-inch intervals while scanning the center of the core for elevated readings. Also scan stained soil, soil lenses, and anomalies (if present), and record readings.

9. If elevated vapor readings were observed, collect the sample scheduled for volatile analysis from the center of the core where elevated readings occurred. If no elevated readings where encountered, the sample material should be collected from the core's center (this area represents the least disturbed area with minimal atmospheric contact) (refer to Section 6.2.1).

10. Using the same trowel, remove remaining sample material from the split-barrel sampler (except for the small portion of disturbed soil usually found at the top of the core sample) and place the soil into a decontaminated stainless steel mixing bowl.

11. Homogenize the sample material as thoroughly as practicable then fill the remaining sample containers (refer to Section 6.2.2).

12. Follow steps 4 through 7 in Section 6.3.

6.7 Subsurface Soil Sampling Using Direct-Push Technology

Subsurface soil samples can be collected to depths of 40+ feet using DPT. DPT equipment, responsibilities, and procedures are described in SOP SA-2.5.

6.8 Excavation and Sampling of Test Pits and Trenches

6.8.1 Applicability

This subsection presents routine test pit or trench excavation techniques and specialized techniques that are applicable under certain conditions.

CAUTION

During the excavation of trenches or pits at hazardous waste sites, several health and safety concerns arise from the method of excavation. No personnel shall enter any test pit or excavation over 4 feet deep except as a last resort, and then only under direct supervision of a Competent Person (as defined in 29 CFR 1929.650 of Subpart P - Excavations). Whenever possible, all required chemical and lithological samples should be collected using the excavator bucket or other remote sampling apparatus. If entrance is required, all test pits or excavations must be stabilized by bracing the pit sides using specifically designed wooden, steel, or aluminum support structures or through sloping and benching. Personnel entering the excavation may be exposed to toxic or explosive gases and oxygen-deficient environments; therefore, monitoring will be conducted by the Competent Person to determine if it is safe to enter. Any entry into a trench greater than 4 feet deep will constitute a Confined Space Entry and must be conducted in conformance with OSHA standard 29 CFR 1910.146. In all cases involving entry, substantial air monitoring, before entry, appropriate respiratory gear and protective clothing determination, and rescue provisions are mandatory. There must be at least three people present at the immediate site before entry by one of the field team members. This minimum number of people will increase based on the potential hazards or complexity of the work to be performed. The reader shall refer to OSHA regulations 29 CFR 1926.650, 29 CFR 1910.120, 29 CFR 1910.134, and 29 CFR 1910.146. High-hazard entries such as this will be supported by members of the Health Sciences Group professionally trained in these activities.

Excavations are generally not practical where a depth of more than about 15 to 20-feet is desired, and they are usually limited to a few feet below the water table. In some cases, a pumping system may be required to control water levels within the pit, providing that pumped water can be adequately stored or disposed. If soil data at depths greater than 15-feet are required, the data are usually obtained through test borings instead of test pits.

In addition, hazardous wastes may be brought to the surface by excavation equipment. This material, whether removed from the site or returned to the subsurface, must be properly handled according to any and all applicable federal, state, and local regulations.

6.8.2 Test Pit and Trench Excavation

Test pits or trench excavations are constructed with the intent that they will provide an open view of subsurface lithology and/or disposal conditions that a boring will not provide. These procedures describe the methods for excavating and logging test pits and trenches installed to determine subsurface soil and rock conditions. Test pit operations shall be logged and documented (see Attachment C).

Test pits and trenches may be excavated by hand or power equipment to permit detailed descriptions of the nature and contamination of the in-situ materials. The size of the excavation will depend primarily on the following:

- The purpose and extent of the exploration

- The space required for efficient excavation
- The chemicals of concern
- The economics and efficiency of available equipment

Test pits normally have a cross section that is 4 to 10 feet square; test trenches are usually 3 to 6 feet wide and may be extended for any length required to reveal conditions along a specific line. The following table provides guidelines for design consideration based on equipment efficiencies.

Equipment	Typical Widths, in Feet
Trenching machine	0.25 to 1.0
Backhoe/Track Hoe	2 to 6

The lateral limits of excavation of trenches and the position of test pits shall be carefully marked on area base maps. If precise positioning is required to indicate the location of highly hazardous materials, nearby utilities, or dangerous conditions, the limits of the excavation shall be surveyed. Also, if precise determination of the depth of buried materials is needed for design or environmental assessment purposes, the elevation of the ground surface at the test pit or trench location shall also be determined by survey. If the test pit/trench will not be surveyed immediately, it shall be backfilled and its position identified with stakes placed in the ground at the margin of the excavation for later surveying.

The construction of test pits and trenches shall be planned and designed in advance as much as possible. However, the following field conditions may necessitate revisions to the initial plans:

- Subsurface utilities
- Surface and subsurface encumbrances
- Vehicle and pedestrian traffic patterns
- Purpose for excavation (e.g., the excavation of potential ordnance items)

The final depth and construction method shall be collectively determined by the FOL and designated Competent Person. The actual layout of each test pit, temporary staging area, and spoils pile may further be predicated based on site conditions and wind direction at the time the test pit is excavated. Prior to excavation, the area may be surveyed by magnetometer or metal detector or other passive methods specified in SOP HS1.0, Utility Location and Excavation Clearance, to identify the presence of underground utilities or drums. Where possible, the excavator should be positioned upwind and preferably within an enclosed cab.

No personnel shall enter any test pit or excavation except as a last resort, and then only under direct supervision of a Competent Person. If entrance is required, OSHA requirements must be met (e.g., walls must be braced with wooden or steel braces, ladders must be placed for every 25 feet of lateral travel and extended 3 feet above ground surface). A temporary guard rail or vehicle stop must be placed along the surface of the hole before entry in situations where the excavation may be approached by traffic. Spoils will be stockpiled no closer than 2 feet from the sidewall of the excavation. The excavation equipment operator shall be careful not to undercut sidewalls and will, where necessary, bench back to increase stability. The top cover, when considered clean, will be placed separately from the subsurface materials to permit clean cover. It is emphasized that the project data needs should be structured such that required samples can be collected without requiring entrance into the excavation. For example,

samples of leachate, groundwater, or sidewall soil can be collected with telescoping poles or similar equipment.

Dewatering and watering may be required to ensure the stability of the side walls, to prevent the bottom of the pit from heaving, and to keep the excavation stable. This is an important consideration for excavations in cohesionless material below the groundwater table and for excavations left open greater than a day. Liquids removed as a result of dewatering operations must be handled as potentially contaminated materials. Procedures for the collection and disposal of such materials should be discussed in the site-specific project plans.

Where possible excavations and test pits shall be opened and closed within the same working day. Where this is not possible, the following engineering controls shall be put in place to control access:

- Trench covers/street plates
- Fences encompassing the entire excavation intended to control access
- Warning signs warning personnel of the hazards
- Amber flashing lights to demarcate boundaries of the excavation at night

Excavations left open will have emergency means to exit should someone accidentally enter.

6.8.3 Sampling in Test Pits and Trenches

6.8.3.1 General

Log test pits and trenches as they are excavated in accordance with the Test Pit Log presented in Attachment C. These records include plan and profile sketches of the test pit/trench showing materials encountered, their depth and distribution in the pit/trench, and sample locations. These records also include safety and sample screening information.

Entry of test pits by personnel is extremely dangerous, shall be avoided unless absolutely necessary, and can occur only after all applicable health and safety and OSHA requirements have been met as stated above. These provisions will be reiterated as appropriate in the project-specific HASP.

The final depth and type of samples obtained from each test pit will be determined at the time the test pit is excavated. Sufficient samples are usually obtained and analyzed to quantify contaminant distribution as a function of depth for each test pit. Additional samples of each waste phase and any fluids encountered in each test pit may also be collected.

In some cases, samples of soil may be extracted from the test pit for reasons other than waste sampling and chemical analysis, for instance, to obtain geotechnical information. Such information includes soil types, stratigraphy, strength, etc., and could therefore entail the collection of disturbed (grab or bulk) or relatively undisturbed (hand-carved or pushed/driven) samples that can be tested for geotechnical properties. The purposes of such explorations are very similar to those of shallow exploratory or test borings, but often test pits offer a faster, more cost-effective method of sampling than installing borings.

6.8.3.2 Sampling Equipment

The following equipment is needed for obtaining samples for chemical or geotechnical analysis from test pits and trenches:

- Backhoe or other excavating machinery.
- Shovels, picks, hand augers, and stainless steel trowels/disposable trowels.
- Sample container - bucket with locking lid for large samples; appropriate bottle ware for chemical or geotechnical analysis samples.
- Polyethylene bags for enclosing sample containers; buckets.
- Remote sampler consisting of 10-foot sections of steel conduit (1-inch-diameter), hose clamps, and right angle adapter for conduit (see Attachment D).

6.8.3.3 Sampling Methods

The methods discussed in this section refer to test pit sampling from grade level. If test pit entry is required, see Section 6.8.3.4.

- Excavate the trench or pit in several 0.5- to 1.0-foot depth increments. Where soil types support the use of a sand bar cutting plate, use of this device is recommended to avoid potentially snagging utilities with the excavator teeth. It is recommended that soil probes or similar devices be employed where buried items or utilities may be encountered. This permits the trench floor to be probed prior to the next cut.
- After each increment:
  - the operator shall wait while the sampler inspects the test pit from grade level
  - the sampler shall probe the next interval where this is considered necessary. Practical depth increments for lithological evaluations may range from 2 to 4 feet i or where lithological changes are noted.
- The backhoe operator, who will have the best view of the test pit, shall immediately cease digging if:
  - Any fluid phase, including groundwater seepage, is encountered in the test pit
  - Any drums, other potential waste containers, obstructions, or utility lines are encountered
  - Distinct changes of material being excavated are encountered

This action is necessary to permit proper sampling of the test pit and to prevent a breach of safety protocol. Depending on the conditions encountered, it may be required to excavate more slowly and carefully with the backhoe.

For obtaining test pit samples from grade level, the following procedure shall be followed:

- Use the backhoe to remove loose material from the excavation walls and floor to the greatest extent possible.
- Secure the walls of the pit, if necessary. (There is seldom any need to enter a pit or trench that would justify the expense of shoring the walls. All observations and samples should be taken from the ground surface.)

- Samples of the test pit material are to be obtained either directly from the backhoe bucket or from the material after it has been deposited on the ground, as follows:

  a. The sampler or FOL shall direct the backhoe operator to remove material from the selected depth or location within the test pit/trench.

  b. The backhoe operator shall bring the bucket over to a designated location on the sidewall a sufficient distance from the pit (at least 5 feet) to allow the sampler to work around the bucket.

  c. After the bucket has been set on the ground, the backhoe operator shall either disengage the controls or shut the machine down.

  d. When signaled by the operator that it is safe to do, the sampler will approach the bucket.

  e. The soil shall be monitored with a photoionization or flame ionization detector (PID or FID) as directed in the project -specific planning documents.

  f. The sampler shall collect the sample from the center of the bucket or pile in accordance with surface soil sampling procedures of Section 6.3 or 6.4, as applicable. Collecting samples from the center of a pile or bucket eliminates cross-contamination from the bucket or other depth intervals.

- If a composite sample is desired, several depths or locations within the pit/trench will be selected, and the bucket will be filled from each area. It is preferable to send individual sample bottles filled from each bucket to the laboratory for compositing under the more controlled laboratory conditions. However, if compositing in the field is required, each sample container shall be filled from materials that have been transferred into a mixing bucket and homogenized. Note that homogenization/compositing is not applicable for samples to be subjected to volatile organic analysis.

> ***CAUTION***
>
> Care must be exercised when using the remote sampler described in the next step because of potential instability of trench walls. In situations where someone must move closer than 2 feet to the excavation edge, a board or platform should be used to displace the sampler's weight to minimize the chance of collapse of the excavation edge. Fall protection should also be employed when working near the edges or trenches greater than 6 feet deep. An immediate means to extract people who have fallen into the trench will be immediately available. These means may include ladders or rope anchor points.

- Using the remote sampler shown in Attachment D, samples can be taken at the desired depth from the sidewall or bottom of the pit as follows:

  a. Scrape the face of the pit/trench using a long-handled shovel or hoe to remove the smeared zone that has contacted the backhoe bucket.

  b. Collect the sample directly into the sample jar, by scraping with the jar edge, eliminating the need for sample handling equipment and minimizing the likelihood of cross-contamination.

  c. Cap the sample jar, remove it from the remote sampler assembly, and package the sample for shipment in accordance with SOP SA-6.3.

- Complete documentation as described in SOP SA-6.3 and Attachment C of this SOP.

6.8.3.4 In-Pit Sampling

Under rare conditions, personnel may be required to enter the test pit/trench. This is necessary only when soil conditions preclude obtaining suitable samples from the backhoe bucket (e.g., excessive mixing of soil or wastes within the test pit/trench) or when samples from relatively small discrete zones within the test pit are required. This approach may also be necessary to sample any seepage occurring at discrete levels or zones in the test pit that are not accessible with remote samplers.

In general, personnel shall sample and log pits and trenches from the ground surface, except as provided for by the following criteria:

- There are no practical alternative means of obtaining such data.
- The SSO and Competent Person determine that such action can be accomplished without breaching site safety protocol. This determination will be based on actual monitoring of the pit/trench after it is dug (including, at a minimum, measurements of oxygen concentration, flammable gases, and toxic compounds, in that order). Action levels will be provided in project-specific planning documents.
- A company-designated Competent Person determines that the pit/trench is stable trough soil classification evaluation/inspections or is made stable (by cutting/grading the sidewalls or using shoring) prior to entrance of any personnel. OSHA requirements shall be strictly observed.

If these conditions are satisfied, only one person may enter the pit/trench. On potentially hazardous waste sites, this individual shall be dressed in selected PPE as required by the conditions in the pit. He/she shall be affixed to a harness and lifeline and continuously monitored while in the pit.

A second and possible third individual shall be fully dressed in protective clothing including a self-contained breathing device and on standby during all pit entry operations to support self rescue or assisted self rescue. The individual entering the pit shall remain therein for as brief a period as practical, commensurate with performance of his/her work. After removing the smeared zone, samples shall be obtained with a decontaminated trowel or spoon.

6.8.3.5 Geotechnical Sampling

In addition to the equipment described in Section 6.8.3.2, the following equipment is needed for geotechnical sampling:

- Soil sampling equipment, similar to that used in shallow drilled boring (i.e., thin-walled tube samplers), that can be pushed or driven into the floor of the test pit.
- Suitable driving (e.g., sledge hammer) or pushing (e.g., backhoe bucket) equipment used to advance the sampler into the soil.
- Knives, spatulas, and other suitable devices for trimming hand-carved samples.
- Suitable containers (bags, jars, tubes, boxes, etc.), labels, wax, etc. for holding and safely transporting collected soil samples.
- Geotechnical equipment (pocket penetrometer, torvane, etc.) for field testing collected soil samples for classification and strength properties.

Disturbed grab or bulk geotechnical soil samples may be collected for most soil in the same manner as comparable soil samples for chemical analysis. These collected samples may be stored in jars or plastic-lined sacks (larger samples), which will preserve their moisture content. Smaller samples of this type are usually tested for their index properties to aid in soil identification and classification: larger bulk samples are usually required to perform compaction tests.

Relatively undisturbed samples are usually extracted in cohesive soil using thin-walled tube samplers, and such samples are then tested in a geotechnical laboratory for their strength, permeability, and/or compressibility. The techniques for extracting and preserving such samples are similar to those used in performing Shelby tube sampling in borings, except that the sampler is advanced by hand or backhoe, rather than by a drill rig. Also, the sampler may be extracted from the test pit by excavation around the tube when it is difficult to pull it out of the ground. If this excavation requires entry of the test pit, the requirements described in Section 6.8.3.4 shall be followed. The thin-walled tube sampler shall be pushed or driven vertically into the floor or steps excavated in the test pit at the desired sampling elevations. Extracting tube samples horizontally from the walls of the test pit is not appropriate because the sample will not have the correct orientation.

A sledge hammer or backhoe may be used to drive or push the tube into the ground. Place a piece of wood over the top of the sampler or sampling tube to prevent damage during driving/pushing of the sample. Pushing the sampler with a constant thrust is always preferable to driving it with repeated blows, thus minimizing disturbance to the sample. When using a sledge hammer, it is recommended that the sampler be stabilized using a rope/strap wrench or pipe wrench to remove the person's hands holding the sampler from the strike zone. If the sample cannot be extracted by rotating it at least two revolutions (to shear off the sample at the bottom), hook the sampler to the excavator or backhoe and extract. This means an alternative head will be used as a connection point or that multiple choke hitches will be applied to extract the sampler. If this fails and the excavator can dig deeper without potentially impacting subsurface utilities, excavate the sampler. If this fails or if the excavator cannot be used due to subsurface utilities, hand-excavate to remove the soil from around the sides of the sampler. If hand-excavation requires entry into the test pit, the requirements in Section 6.8.3.4 must be followed. Prepare the sample as described in Steps 9 through 18 in Section 6.2.3, and label, pack and transport the sample in the required manner, as described in SOPs SA-6.3 and SA-6.1.

6.8.4 Backfilling of Trenches and Test Pits

All test pits and excavations must be either backfilled, covered, or otherwise protected at the end of each day. No excavations shall remain open during non-working hours unless adequately covered or otherwise protected.

Before backfilling, the onsite crew may photograph, if required by the project-specific work plan, all significant features exposed by the test pit and trench and shall include in the photograph a scale to show dimensions. Photographs of test pits shall be marked to include site number, test pit number, depth, description of feature, and date of photograph. In addition, a geologic description of each photograph shall be entered in the site logbook. All photographs shall be indexed and maintained as part of the project file for future reference.

After inspection, backfill material shall be returned to the pit under the direction of the FOL. Backfill should be returned to the trench or test pit in 6-inch to 1-foot lifts and compacted with the bucket. Remote controlled tampers or rollers may be lowered into the trench and operated from top side. This procedure will continue to the grade surface. It is recommended that the trench be tracked or rolled in. During excavation, clean soil from the top 2 feet may have been separated to be used to cover the last segments. Where these materials are not clean, it is recommended that clean fill be used for the top cover.

~~If a low-permeability layer is penetrated (resulting in groundwater flow from an upper contaminated flow zone into a lower uncontaminated flow zone), backfill material must represent original conditions or be impermeable. Backfill could consist of a soil-bentonite mix prepared in a proportion specified by the FOL (representing a permeability equal to or less than original conditions). Backfill can be covered by "clean" soil and graded to the original land contour. Revegetation of the disturbed area may also be required.~~

6.9 Records

The appropriate sample log sheet (see Attachment A of this SOP) must be completed by the site geologist/sampler for all samples collected. All soil sampling locations should be documented by tying in the location of two or more nearby permanent landmarks (building, telephone pole, fence, etc.) or obtaining GPS coordinates; and shall be noted on the appropriate sample log sheet, site map, or field notebook. Surveying may also be necessary, depending on the project requirements.

~~Test pit logs (see Attachment C of this SOP) shall contain a sketch of pit conditions. If the project specific work plan requires photographs, at least one photograph with a scale for comparison shall be taken of each pit. Included in the photograph shall be a card showing the test pit number. Boreholes, test pits, and trenches shall be logged by the field geologist in accordance with SOP GH-1.5.~~

Other data to be recorded in the field logbook include the following:

- Name and location of job
- Date of boring and excavation
- Approximate surface elevation
- Total depth of boring and excavation
- ~~Dimensions of pit~~
- Method of sample acquisition
- Type and size of samples
- Soil and rock descriptions
- Photographs if required
- Groundwater levels
- PID/FID/LEL/O_2 meter readings
- Other pertinent information, such as waste material encountered

In addition, site-specific documentation to be maintained by the SSO and/or Competent Person will be required including:

- Calibration logs
- Excavation inspection checklists

- Soil type classification

7.0 REFERENCES

American Society for Testing and Materials, 1987. ASTM Standards D1587-83 and D1586-84. ASTM Annual Book of Standards. ASTM. Philadelphia, Pennsylvania. Volume 4.08.

NUS Corporation, 1986. Hazardous Material Handling Training Manual.

NUS Corporation and CH2M Hill, August, 1987. Compendium of Field Operation Methods. Prepared for the U.S. EPA.

OSHA, Excavation, Trenching and Shoring 29 CFR 1926.650-653.

OSHA, Confined Space Entry 29 CFR 1910.146.

USEPA, November 2001. Environmental Investigations Standard Operating Procedures and Quality Assurance Manual.

ATTACHMENT A
SOIL & SEDIMENT SAMPLE LOG SHEET

Tetra Tech NUS, Inc.

SOIL & SEDIMENT SAMPLE LOG SHEET

Page___ of ___

Project Site Name: _____
Project No.: _____

[] Surface Soil
[] Subsurface Soil
[] Sediment
[] Other: _____
[] QA Sample Type: _____

Sample ID No.: _____
Sample Location: _____
Sampled By: _____
C.O.C. No.: _____

Type of Sample:
[] Low Concentration
[] High Concentration

GRAB SAMPLE DATA:

Date:	Depth	Color	Description (Sand, Silt, Clay, Moisture, etc.)
Time:			
Method:			
Monitor Reading (ppm):			

COMPOSITE SAMPLE DATA:

Date:	Time	Depth	Color	Description (Sand, Silt, Clay, Moisture, etc.)
Method:				
Monitor Readings (Range in ppm):				

SAMPLE COLLECTION INFORMATION:

Analysis	Container Requirements	Collected	Other

OBSERVATIONS / NOTES:

MAP:

Circle If Applicable:

MS/MSD	Duplicate ID No.:

Signature(s):

ATTACHMENT B
SPLIT-SPOON SAMPLER

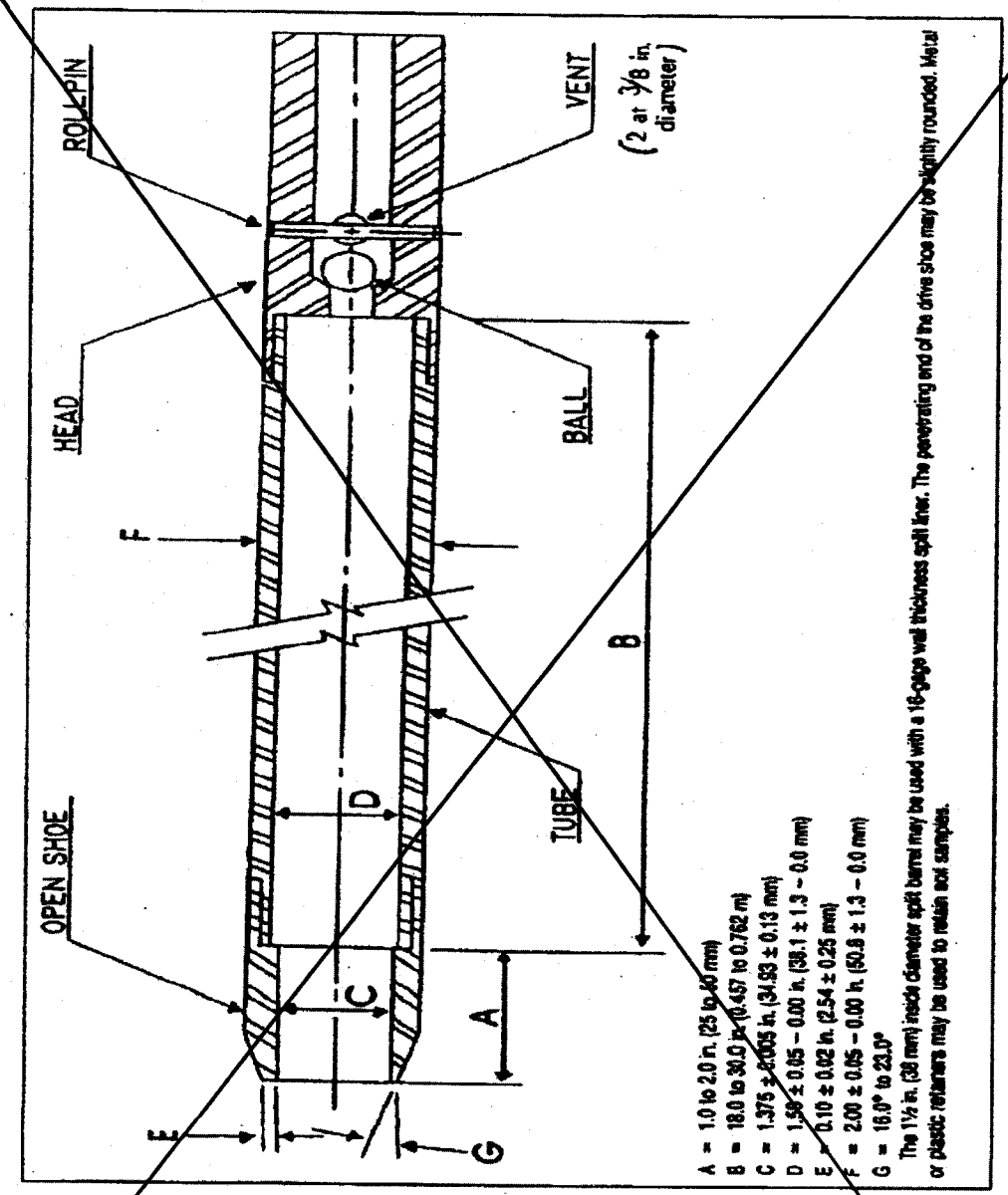

A = 1.0 to 2.0 in. (25 to 50 mm)
B = 18.0 to 30.0 in. (0.457 to 0.762 m)
C = 1.375 ± 0.005 in. (34.93 ± 0.13 mm)
D = 1.50 ± 0.05 – 0.00 in. (38.1 ± 1.3 – 0.0 mm)
E = 0.10 ± 0.02 in. (2.54 ± 0.25 mm)
F = 2.00 ± 0.05 – 0.00 in. (50.8 ± 1.3 – 0.0 mm)
G = 16.0° to 23.0°

The 1½ in. (38 mm) inside diameter split barrel may be used with a 16-gage wall thickness split liner. The penetrating end of the drive shoe may be slightly rounded. Metal or plastic retainers may be used to retain soil samples.

ATTACHMENT C
TEST PIT LOG

Tetra Tech NUS, Inc.

TEST PIT LOG

Page ___ of ___

PROJECT NAME: _____ TEST PIT No.: _____
PROJECT NUMBER: _____ DATE: _____
LOCATION: _____ GEOLOGIST: _____

Depth (Ft.)	Lithology Change (Depth/Ft.)	MATERIAL DESCRIPTION Soil/Waste Characteristics (lithology, density, color, etc.)	USCS	Remarks	PID/FID READING Source (ppm)	BZ (ppm)

TEST PIT CROSS SECTION AND / OR PLAN VIEW

REMARKS: _____

PHOTO LOG: _____

ATTACHMENT D
REMOTE SAMPLE HOLDER FOR TEST PIT/TRENCH SAMPLING

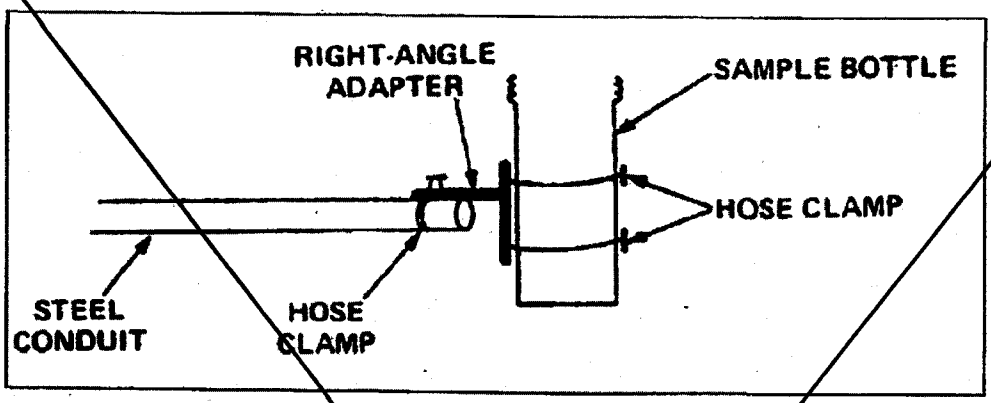

TABLE OF CONTENTS

SECTION **PAGE**

1.0 PURPOSE 2

2.0 SCOPE 2

3.0 GLOSSARY 2

4.0 RESPONSIBILITIES 2

5.0 SOIL SAMPLING PROCEDURES 3

5.1 GENERAL 3
5.2 SAMPLING EQUIPMENT 3
5.3 DPT SAMPLING METHODOLOGY 3

~~**6.0 GROUNDWATER SAMPLING PROCEDURES** ..... 4~~

~~6.1 GENERAL ..... 4~~
~~6.2 SAMPLING EQUIPMENT ..... 4~~
~~6.3 DPT TEMPORARY WELL POINT INSTALLATION AND SAMPLING METHODOLOGY ..... 5~~

7.0 RECORDS 5

ATTACHMENTS

1 SAFE WORK PERMIT 6

1.0 PURPOSE

The purpose of this procedure is to provide general reference information on Direct Push Technology (DPT). DPT is designed to collect soil, groundwater, and soil gas samples without using conventional drilling techniques. The advantage of using DPT over conventional drilling includes the generation of little or no drill cuttings, sampling in locations with difficult accessibility, reduced overhead clearance requirements, no fluid introduction during probing, and typical lower costs per sample than with conventional techniques. Disadvantages include a maximum penetration depth of approximately 15 to 40 feet in dense soils (although it may be as much as 60 to 80 feet in certain types of geological environments), reduced capability of obtaining accurate water-level measurements, and the inability to install permanent groundwater monitoring wells. The methods and equipment described herein are for collection of surface and subsurface soil samples and groundwater samples. Soil gas sampling is discussed in SOP SA-2.4.

2.0 SCOPE

This procedure provides information on proper sampling equipment and techniques for DPT. Review of the information contained herein will facilitate planning of the field sampling effort by describing standard sampling techniques. The techniques described shall be followed whenever applicable, noting that site-specific conditions or project-specific plans may require adjustments in methodology.

3.0 GLOSSARY

Direct Push Technology (DPT) - DPT refers to sampling tools and sensors that are driven directly into the ground without the use of conventional drilling equipment. DPT typically utilizes hydraulic pressure and/or percussion hammers to advance the sampling tools. A primary advantage of DPT over conventional drilling techniques is that DPT results in the generation of little or no investigation derived waste.

Geoprobe® - Geoprobe® is a manufacturer of a hydraulically-powered, percussion/probing machines utilizing DPT to collect subsurface environmental samples. Geoprobe® relies on a relatively small amount of static weight (vehicle) combined with percussion as the energy for advancement of a tool string. The Geoprobe® equipment can be mounted in a multitude of vehicles for access to all types of environmental sites.

HydroPunch™ - HydroPunch™ is a manufacturer of stainless steel and Teflon® sampling tools that are capable of collecting representative groundwater and/or soil samples without requiring the installation of a groundwater monitoring well or conventional soil boring. HydroPunch™ is an example of DPT sampling equipment.

Flame Ionization Detector (FID) - A portable instrument for the measurement of many combustible organic compounds and a few inorganic compounds in air at parts-per million levels. The basis for the detection is the ionization of gaseous species utilizing a flame as the energizing source.

Photo Ionization Detector (PID) - A portable instrument for the measurement of many combustible organic compounds and a few inorganic compounds in air at parts-per million levels. The basis for the detection is the ionization of gaseous species utilizing ultraviolet radiation as the energizing source.

4.0 RESPONSIBILITIES

Project Manager - The Project Manager is responsible for selecting and/or reviewing the appropriate DPT drilling procedure required to support the project objectives.

Field Operations Leader (FOL)- The FOL is primarily responsible for performing the DPT in accordance with the project-specific plan.

5.0 SOIL SAMPLING PROCEDURES

5.1 General

The common methodology for the investigation of the vadose zone is soil boring drilling and soil sampling. However, drilling soil borings can be very expensive. Generally the advantage of DPT for subsurface soil sampling is the reduced cost of disposal of drilling cuttings and shorter sampling times.

5.2 Sampling Equipment

Equipment needed for conducting DPT drilling for subsurface soil sampling includes, but is not limited to, the following:

- Geoprobe® Sampling Kit
- Cut-resistant gloves
- 4-foot x 1.5-inch diameter macrocore sampler
- Probe sampling adapters
- Roto-hammer with 1.5-inch bit
- Disposable acetate liners for soil macrocore sampler
- Cast aluminum or steel drive points
- Geoprobe® AT-660 Series Large Bore Soil Sampler, or equivalent
- Standard decontamination equipment and solutions

For health and safety equipment and procedures, follow the direction provided in the Safe Work Permit in Attachment 1, or the more detailed directions provided in the project's Health and Safety Plan.

5.3 DPT Sampling Methodology

There are several methods for the collection of soil samples using DPT drilling. The most common method is discussed in the following section. Variations of the following method may be conducted upon approval of the Project Manager in accordance with the project-specific plan.

- Macrocore samplers fitted with detachable aluminum or steel drive points are driven into the ground using hydraulic pressure. If there is concrete or pavement over a sampling location, a Roto-hammer is used to drill a minimum 1.5-inch diameter hole through the surface material. A Roto-hammer may also be used if very dense soils are encountered.

- The sampler is advanced continuously in 4-foot intervals or less if desired. No soil cuttings are generated because the soil which is not collected in the sampler is displaced within the formation.

- The sampler is retracted from the hole, and the 4-foot continuous sample is removed from the outer coring tube. The sample is contained within an inner acetate liner.

- Attach the metal trough from the Geoprobe® Sampling Kit firmly to the tail gate of a vehicle. If a vehicle with a tail gate is not available, secure the trough on another suitable surface.

- Place the acetate liner containing the soils in the trough.

- While wearing cut-resistant gloves (constructed of leather or other suitable material), cut the acetate liner through its entire length using the double-bladed knife that accompanies the Geoprobe® Sampling Kit. Then remove the strip of acetate from the trough to gain access to the collected soils. Do not attempt to cut the acetate liner while holding it in your hand.

- Field screen the sample with an ~~FID or~~ PID, and observe/examine the sample (according to SOP GH-1.3). If appropriate, transfer the sample to sample bottles for laboratory analysis. If additional volume is required, push an additional boring adjacent to the first and composite/mix the same interval. Field compositing is usually not acceptable for sample requiring volatile organics analysis.

- Once sampling has been completed, the hole is backfilled with bentonite chips or bentonite cement grout, depending upon project requirements. Asphalt or concrete patch is used to cap holes through paved or concrete areas. All holes should be finished smooth to existing grade.

- In the event the direct push van/truck cannot be driven to a remote location or a sampling location with difficult accessibility, sampling probes may be advanced and sampled manually or with air/electric operated equipment (e.g., jack hammer).

- Sampling equipment is decontaminated prior to collecting the next sample.

6.0 GROUNDWATER SAMPLING PROCEDURES

6.1 General

The most common methodology for the investigation of groundwater is the installation and sampling of permanent monitoring wells. If only groundwater screening is required, the installation and sampling of temporary well points may be performed. The advantage of temporary well point installation using DPT is reduced cost due to no or minimal disposal of drilling cuttings and well construction materials, and shorter installation/times sampling.

Two disadvantages of DPT drilling for well point installation are:

- In aquifers with low yields, well points may have to be sampled without purging or development.
- If volume requirements are high, this method can be time consuming for low yield aquifers.

6.2 Sampling Equipment

Equipment needed for temporary well installation and sampling using DPT includes, but is not limited, to the following:

- 2-foot x 1-inch diameter mill-slotted (0.005 to 0.02-inch) well point
- Connecting rods
- Roto-hammer with 1.5-inch bit
- Mechanical jack
- 1/4-inch OD polyethylene tubing
- 3/8-inch OD polyethylene tubing
- Peristaltic pump
- Standard decontamination equipment and solutions

6.3 DPT Temporary Well Point Installation and Sampling Methodology

There are several methods for the installation and sampling of temporary well points using DPT. The most common methodology is discussed below. Variations of the following method may be conducted upon approval of the Project Manager in accordance with the project specific plan.

- A 2-foot x 1-inch diameter mill-slotted (0.005 to 0.02-inch) well point attached to connecting rods is driven into the ground to the desired depth using a rotary electric hammer or other direct push drill rig. If there is concrete or pavement over a sampling location, a Roto-hammer or electric coring machine is used to drill a hole through the surface material.

- The well point will be allowed to equilibrate for at least 15 minutes, after which a measurement of the static water level will be taken. The initial measurement of the water level will be used to assess the amount of water which is present in the well point and to determine the amount of silt and sand infiltration that may have occurred.

- The well point will be developed using a peristaltic pump and polyethylene tubing to remove silt and sand which may have entered the well point. The well point is developed by inserting polyethylene tubing to the bottom of the well point and lifting and lowering the tubing slightly while the pump is operating. The pump will be operated at a maximum rate of approximately 2 liters per minute. After removal of sediment from the bottom of the well point, the well point will be vigorously pumped at maximum capacity until discharge water is visibly clear and no further sediments are being generated. Measurements of pH, specific conductance, temperature, and turbidity shall be recorded every 5 to 10 minutes during the purging process. After two consistent readings of pH, specific conductance, temperature and turbidity (±10 percent), the well may be sampled.

- A sample will be collected using the peristaltic pump set at the same or reduced speed as during well development. Samples (with the exception of the samples to be analyzed for volatile organic compounds, VOCs) will be collected directly from the pump discharge. *Sample containers for VOCs* will be filled by (first shutting off the pump) crimping the discharge end of the sample tubing when filled, removing the inlet end of the sample tubing from the well, suspending the inlet tubing above the vial, and allowing water to fill each vial by gravity flow.

- Once the groundwater sample has been collected, the connecting rods and well point will be removed from the hole with the direct push rig hydraulics. The hole will be backfilled with bentonite chips or bentonite cement grout, depending upon project requirements. Asphalt or concrete patch will be used to cap holes through paved or concrete areas. All holes will be finished smooth to existing grade.

- In the event the direct push van/truck cannot be driven to a remote location or sampling location with difficult accessibility, sampling probes may be advanced and sampled manually or with air/electric-operated equipment (e.g., jack hammer).

- Decontaminate the equipment before moving to the next location.

7.0 RECORDS

A record of all field procedures, tests, and observations must be recorded in the field logbook, boring logs, and sample log sheets, as needed. Entries should include all pertinent data regarding the investigation. The use of sketches and field landmarks will help to supplement the investigation and evaluation.

ATTACHMENT 1
SAFE WORK PERMIT FOR DPT OPERATIONS

Permit No. _____ Date: _____ Time: From _____ to _____

SECTION I: General Job Scope

I. Work limited to the following (description, area, equipment used): **Monitoring well drilling and installation through direct push technology**

II. Required Monitoring Instruments: _____

III. Field Crew: _____

IV. On-site Inspection conducted ☐ Yes ☐ No Initials of Inspector _____ _____
TtNUS

SECTION II: General Safety Requirements (To be filled in by permit issuer)

V. Protective equipment required
Level D ☒ Level B ☐
Level C ☐ Level A ☐
Detailed on Reverse

Respiratory equipment required
Full face APR ☐ Escape Pack ☐
Half face APR ☐ SCBA ☐
SKA-PAC SAR ☐ Bottle Trailer ☐
Skid Rig ☐ None ☒

Level D Minimum Requirements: Sleeved shirt and long pants, safety footwear, and work gloves. Safety glasses, hard hats, and hearing protection will be worn when working near or sampling in the vicinity of the DPT rig.

Modifications/Exceptions.

VI. Chemicals of Concern | Action Level(s) | Response Measures

VII. Additional Safety Equipment/Procedures

Hard-hat	☒ Yes	☐ No	Hearing Protection (Plugs/Muffs)	☒ Yes	☐ No
Safety Glasses	☒ Yes	☐ No	Safety belt/harness	☐ Yes	☒ No
Chemical/splash goggles	☐ Yes	☒ No	Radio	☐ Yes	☒ No
Splash Shield	☐ Yes	☒ No	Barricades	☒ Yes	☐ No
Splash suits/coveralls	☐ Yes	☐ No	Gloves (Type - _____)	☐ Yes	☐ No
Steel toe Work shoes or boots	☒ Yes	☐ No	Work/warming regimen	☐ Yes	☐ No

Modifications/Exceptions: Reflective vests for high traffic areas.

VIII. Procedure review with permit acceptors

	Yes	NA		Yes	NA
Safety shower/eyewash (Location & Use)	☐	☒	Emergency alarms	☐	☐
Daily tail gate meetings	☒	☐	Evacuation routes	☐	☐
Contractor tools/equipment/PPE inspected	☐	☐	Assembly points	☐	☐

IX. Site Preparation

Utility Clearances obtained for areas of subsurface investigation	☐ Yes	☐ No
Physical hazards removed or blockaded	☐ Yes	☐ No
Site control boundaries demarcated/signage	☐ Yes	☐ No

X. Equipment Preparation

	Yes	NA
Equipment drained/depressurized	☐	☒
Equipment purged/cleaned	☐	☒
Isolation checklist completed	☐	☒
Electrical lockout required/field switch tested	☐	☒
Blinds/misalignments/blocks & bleeds in place	☐	☒
Hazardous materials on walls/behind liners considered	☐	☒

XI. Additional Permits required (Hot work, confined space entry). ☐ Yes ☐ No
If yes, complete permit required or contact Health Sciences, Pittsburgh Office

XII. Special instructions, precautions:

Permit Issued by: _____ Permit Accepted by: _____

TABLE OF CONTENTS

SECTION **PAGE**

1.0 PURPOSE 2

2.0 SCOPE 2

3.0 GLOSSARY 2

4.0 RESPONSIBILITIES 3

5.0 PROCEDURES 3

5.1 SAMPLE CONTAINERS 3
5.2 SAMPLE PRESERVATION 3
5.2.1 Overview 4
5.2.2 Preparation and Addition of Reagents 4
5.3 FIELD FILTRATION 5
5.4 SAMPLE PACKAGING AND SHIPPING 6
5.4.1 Environmental Samples 6

6.0 REFERENCES 7

ATTACHMENTS

A GENERAL SAMPLE CONTAINER AND PRESERVATION REQUIREMENTS 8
B ADDITIONAL REQUIRED CONTAINERS, PRESERVATION TECHNIQUES, AND HOLDING TIMES 9

1.0 PURPOSE

The purpose of this Standard Operating Procedure (SOP) is to provide information on sample preservation, packaging, and shipping procedures to be used in handling environmental samples submitted for chemical constituent, biological, or geotechnical analysis. Sample chain-of-custody procedures and other aspects of field documentation are addressed in SOP SA-6.3. Sample identification is addressed in SOP CT-04.

2.0 SCOPE

This procedure describes the appropriate containers to be used for samples depending on the analyses to be performed, and the steps necessary to preserve the samples when shipped off site for chemical analysis.

3.0 GLOSSARY

Hazardous Material - A substance or material which has been determined by the Secretary of Transportation to be capable of posing an unreasonable risk to health, safety, and property when transported in commerce, and which has been so designated. Under 49 CFR, the term includes hazardous substances, hazardous wastes, marine pollutants, and elevated temperature materials, as well as materials designated as hazardous under the provisions of §172.101 and §172.102 and materials that meet the defining criteria for hazard classes and divisions in Part 173. With slight modifications, IATA has adopted DOT "hazardous materials" as IATA "Dangerous Goods."

Hazardous Waste - Any substance listed in 40 CFR, Subpart D (~~y~~261.30 et seq.), or otherwise characterized as ignitable, corrosive, reactive, or toxic (as defined by Toxicity Characteristic Leaching Procedure, TCLP, analysis) as specified under 40 CFR, Subpart C (~~y~~261.20 et seq.), that would be subject to manifest requirements specified in 40 CFR 262. Such substances are defined and regulated by EPA.

Marking - A descriptive name, identification number, instructions, cautions, weight, specification or UN marks, or combination thereof required on outer packaging of hazardous materials.

n.o.i - Not otherwise indicated (may be used interchangeably with n.o.s.).

n.o.s. - Not otherwise specified.

Packaging - A receptacle and any other components or materials necessary for compliance with the minimum packaging requirements of 49 CFR 174, including containers (other than freight containers or overpacks), portable tanks, cargo tanks, tank cars, and multi-unit tank-car tanks to perform a containment function in conformance with the minimum packaging requirements of 49 CFR 173.24(a) & (b).

Placard - Color-coded, pictorial sign which depicts the hazard class symbol and name and which is placed on the side of a vehicle transporting certain hazardous materials.

Common Preservatives:

- Hydrochloric Acid - HCl
- Sulfuric Acid - H_2SO_4
- Nitric Acid - HNO_3
- Sodium Hydroxide - NaOH

Other Preservatives

- Zinc Acetate
- Sodium Thiosulfate - $Na_2S_2O_3$

Normality (N) - Concentration of a solution expressed as equivalent per liter, an equivalent being the amount of a substance containing 1 gram-atom of replaceable hydrogen or its equivalent.

Reportable Quantity (RQ) - For the purposes of this SOP, means the quantity specified in column 3 of the Appendix to DOT 49 CFR §172.101 for any material identified in column 1 of the appendix. A spill greater than the amount specified must be reported to the National Response Center.

Sample - A sample is physical evidence collected from a facility or the environment, which is representative of conditions at the location and time of collection.

4.0 RESPONSIBILITIES

Field Operations Leader - Directly responsible for the bottling, preservation, labeling, packaging, shipping, and custody of samples up to and including release to the shipper.

Field Samplers - Responsible for initiating the Chain-of-Custody Record (per SOP SA-6.3), implementing the packaging and shipping requirements, and maintaining custody of samples until they are relinquished to another custodian or to the shipper.

5.0 PROCEDURES

Sample identification, labeling, documentation, and chain-of-custody are addressed by SOP SA-6.3.

5.1 Sample Containers

Different types of chemicals react differently with sample containers made of various materials. For example, trace metals adsorb more strongly to glass than to plastic, whereas many organic chemicals may dissolve various types of plastic containers. Attachments A and B show proper containers (as well as other information) per 40 CFR 136. In general, the sample container shall allow approximately 5-10 percent air space ("ullage") to allow for expansion/vaporization if the sample warms during transport. However, for collection of volatile organic compounds, head space shall be omitted. The analytical laboratory will generally provide certified-clean containers for samples to be analyzed for chemical constituents. Shelby tubes or other sample containers are generally provided by the driller for samples requiring geotechnical analysis. Sufficient lead time shall be allowed for a delivery of sample container orders. Therefore, it is critical to use the correct container to maintain the integrity of the sample prior to analysis.

Once opened, the container must be used at once for storage of a particular sample. Unused but opened containers are to be considered contaminated and must be discarded. Because of the potential for introduction of contamination, they cannot be reclosed and saved for later use. Likewise, any unused containers which appear contaminated upon receipt, or which are found to have loose caps or a missing Teflon liner (if required for the container), shall be discarded.

5.2 Sample Preservation

Many water and soil samples are unstable and therefore require preservation to prevent changes in either the concentration or the physical condition of the constituent(s) requiring analysis. Although complete and irreversible preservation of samples is not possible, preservation does retard the chemical and biological

changes that inevitably take place after the sample is collected. Preservation techniques are usually limited to pH control, chemical addition(s), and refrigeration/ freezing (certain biological samples only).

5.2.1 Overview

The preservation techniques to be used for various analytes are listed in Attachments A and B. Reagents required for sample preservation will either be added to the sample containers by the laboratory prior to their shipment to the field or be added in the field (in a clean environment). Only high purity reagents shall be used for preservation. In general, aqueous samples of low-concentration organics (or soil samples of low- or medium-concentration organics) are cooled to 4°C. Medium-concentration aqueous samples, high-hazard organic samples, and some gas samples are typically not preserved. Low-concentration aqueous samples for metals are acidified with HNO_3, whereas medium-concentration and high-hazard aqueous metal samples are not preserved. Low- or medium-concentration soil samples for metals are cooled to 4°C, whereas high-hazard samples are not cooled.

The following subsections describe the procedures for preparing and adding chemical preservatives. Attachments A and B indicate the specific analytes which require these preservatives.

The FOL is responsible for ensuring that an accurate Chemical Inventory is created and maintained for all hazardous chemicals brought to the work site (see Section 5 of the TtNUS Health and Safety Guidance Manual). Furthermore, the FOL must ensure that a corresponding Material Safety Data Sheet (MSDS) is collected for every substance entered on the site Chemical Inventory, and that all persons using/handling/ disposing of these substances review the appropriate MSDS for substances they will work with. The Chemical Inventory and the MSDSs must be maintained at each work site in a location and manner where they are readily-accessible to all personnel.

5.2.2 Preparation and Addition of Reagents

Addition of the following acids or bases may be specified for sample preservation; these reagents shall be analytical reagent (AR) grade or purer and shall be diluted to the required concentration with deionized water before field sampling commences. To avoid uncontrolled reactions, be sure to Add Acid to water (not vice versa). A dilutions guide is provided below.

Acid/Base	Dilution	Concentration	Estimated Amount Required for Preservation
Hydrochloric Acid (HCl)	1 part concentrated HCl: 1 part double-distilled, deionized water	6N	5-10 mL
Sulfuric Acid (H_2SO_4)	1 part concentrated H_2SO_4: 1 part double-distilled, deionized water	18N	2 - 5 mL
Nitric Acid (HNO_3)	Undiluted concentrated HNO_3	16N	2 - 5 mL
Sodium Hydroxide (NaOH)	400 grams solid NaOH dissolved in 870 mL double-distilled, deionized water; yields 1 liter of solution	10N	2 mL

The amounts required for preservation shown in the above table assumes proper preparation of the preservative and addition of the preservative to one liter of aqueous sample. This assumes that the sample is initially at pH 7, is poorly buffered, and does not contain particulate matter; as these conditions vary, more preservative may be required. Consequently, the final sample pH must be checked using narrow-range pH paper, as described in the generalized procedure detailed below:

- Pour off 5-10 mL of sample into a dedicated, clean container. Use some of this sample to check the initial sample pH using wide range (0-14) pH paper. Never dip the pH paper into the sample; always apply a drop of sample to the pH paper using a clean stirring rod or pipette.

- Add about one-half of the estimated preservative required to the original sample bottle. Cap and invert gently several times to mix. Check pH (as described above) using medium range pH paper (pH 0-6 or pH 7.5-14, as applicable).

- Cap sample bottle and seal securely.

Additional considerations are discussed below:

- To test if ascorbic acid must be used to remove oxidizing agents present in the sample before it can be properly preserved, place a drop of sample on KI-starch paper. A blue color indicates the need for ascorbic acid addition.

  If required, add a few crystals of ascorbic acid to the sample and retest with the KI-starch paper. Repeat until a drop of sample produces no color on the KI-starch paper. Then add an additional 0.6 grams of ascorbic acid per each liter of sample volume.

  Continue with proper base preservation of the sample as described above.

- Samples for sulfide analysis must be treated by the addition of 4 drops (0.2 mL) of 2N zinc acetate solution per 100 ml of sample.

  The 2N zinc acetate solution is made by dissolving 220 grams of zinc acetate in 870 mL of double-distilled, deionized water to make 1 liter of solution.

  The sample pH is then raised to 9 using the NaOH preservative.

- Sodium thiosulfate must be added to remove residual chlorine from a sample. To test the sample for residual chlorine use a field test kit specially made for this purpose.

  If residual chlorine is present, add 0.08 grams of sodium thiosulfate per liter of sample to remove the residual chlorine.

  Continue with proper acidification of the sample as described above.

For biological samples, 10% buffered formalin or isopropanol may also be required for preservation. Questions regarding preservation requirements should be resolved through communication with the laboratory before sampling begins.

5.3 Field Filtration

At times, field-filtration may be required to provide for the analysis of dissolved chemical constituents. Field-filtration must be performed prior to the preservation of samples as described above. General procedures for field filtration are described below:

- The sample shall be filtered through a non-metallic, 0.45-micron membrane filter, immediately after collection. The filtration system shall consist of dedicated filter canister, dedicated tubing, and a peristaltic pump with pressure or vacuum pumping squeeze action (since the sample is filtered by mechanical peristalsis, the sample travels only through the tubing).

- To perform filtration, thread the tubing through the peristaltic pump head. Attach the filter canister to the discharge end of the silicon tubing (note flow direction arrow); attach the aqueous sample container to the intake end of the silicon tubing. Turn the peristaltic pump on and perform filtration. Run approximately 100 ml of sample through the filter and discard prior to sample collection.

- Continue by preserving the filtrate (contained in the filter canister), as applicable and generally described above.

5.4 Sample Packaging and Shipping

Only employees who have successfully completed the TtNUS "Shipping Hazardous Materials" training course are authorized to package and ship hazardous substances. These trained individuals are responsible for performing shipping duties in accordance with this training.

Samples collected for shipment from a site shall be classified as either environmental or hazardous material samples. Samples from drums containing materials other than Investigative Derived Waste (IDW) and samples obtained from waste piles or bulk storage tanks are generally shipped as hazardous materials. A distinction must be made between the two types of samples in order to:

- Determine appropriate procedures for transportation of samples (if there is any doubt, a sample shall be considered hazardous and shipped accordingly.)

- Protect the health and safety of transport and laboratory personnel receiving the samples (special precautions are used by the shipper and at laboratories when hazardous materials are received.)

Detailed procedures for packaging environmental samples are outlined in the remainder of this section.

5.4.1 Environmental Samples

Environmental samples are packaged as follows:

- Place properly identified sample container, with lid securely fastened, in a plastic bag (e.g. Ziploc baggie), and seal the bag.

- Place sample in a cooler constructed of sturdy material which has been lined with a large, plastic bag (e.g. "garbage" bag). Drain plugs on coolers must be taped shut.

- Pack with enough cushioning materials such as bubble wrap (shoulders of bottles must be iced if required) to minimize the possibility of the container breaking.

- If cooling is required (see Attachments A and B), place ice around sample container shoulders, and on top of packing material (minimum of 8 pounds of ice for a medium-size cooler).

- Seal (i.e., tape or tie top in knot) large liner bag.

- The original (top, signed copy) of the COC form shall be placed inside a large Ziploc-type bag and taped inside the lid of the shipping cooler. If multiple coolers are sent but are included on one COC form, the COC form should be sent with the cooler containing the vials for VOC analysis. The COC form should then state how many coolers are included with that shipment.

- Close and seal outside of cooler as described in SOP SA-6.3. Signed custody seals must be used.

Coolers must be marked as containing "Environmental Samples." The appropriate side of the container must be marked "This End Up" and arrows placed appropriately. No DOT marking or labeling is required; there are no DOT restrictions on mode of transportation.

6.0 REFERENCES

American Public Health Association, 1981. Standard Methods for the Examination of Water and Wastewater, 15th Edition. APHA, Washington, D.C.

International Air Transport Association (latest issue). Dangerous Goods Regulations, Montreal, Quebec, Canada.

U.S. Department of Transportation (latest issue). Hazardous Materials Regulations, 49 CFR 171-177.

U.S. EPA, 1984. "Guidelines Establishing Test Procedures for the Analysis of Pollutants under Clean Water Act." Federal Register, Volume 49 (209), October 26, 1984, p. 43234.

U.S. EPA, 1979. Methods for Chemical Analysis of Water and Wastes. EPA-600/4-79-020, U.S. EPA-EMSL, Cincinnati, Ohio.

ATTACHMENT A

GENERAL SAMPLE CONTAINER AND PRESERVATION REQUIREMENTS

Sample Type and Concentration			Container[1]	Sample Size	Preservation[2]	Holding Time[2]
WATER						
Organics (GC&GC/MS)	VOC	Low	Borosilicate glass	2 x 40 mL	Cool to 4°C HCl to ≤ 2	14 days[9]
	Extractables SVOCs and pesticide/PCBs)	(Low	Amber glass	2x2 L or 4x1 L	Cool to 4°C	7 days to extraction; 40 days after extraction
	Extractables SVOCs and pesticide/PCBs)	(Medium	Amber glass	2x2 L or 4x1 L	None	7 days to extraction; 40 days after extraction
Inorganics	Metals	Low	High-density polyethylene	1 L	HNO_3 to pH ≤2	6 months (Hg-28 days)
		Medium	Wide-mouth glass	16 oz.	None	6 months
	Cyanide	Low	High-density polyethylene	1 L	NaOH to pH>12	14 days
	Cyanide	Medium	Wide-mouth glass	16 oz.	None	14 days
Organic/ Inorganic	High Hazard		Wide-mouth glass	8 oz.	None	14 days
SOIL						
Organics (GC&GC/MS)	VOC		EnCore Sampler	(3) 5 g Samplers	Cool to 4°C	48 hours to lab preservation
	Extractables SVOCs and pesticides/PCBs)	(Low	Wide-mouth glass	8 oz.	Cool to 4°C	14 days to extraction; 40 days after extraction
	Extractables SVOCs and pesticides/PCBs)	(Medium	Wide-mouth glass	8 oz.	Cool to 4°C	14 days to extraction; 40 days after extraction
Inorganics	Low/Medium		Wide-mouth glass	8 oz.	Cool to 4°C	6 months (Hg - 28 days) Cyanide (14 days)
Organic/Inorganic	High Hazard		Wide-mouth glass	8 oz.	None	NA
Dioxin/Furan	All		Wide-mouth glass	4 oz.	None	35 days until extraction; 40 days after extraction
TCLP	All		Wide-mouth glass	8 oz.	None	7 days until preparation; analysis as per fraction
AIR						
Volatile Organics	Low/Medium		Charcoal tube -- 7 cm long, 6 mm OD, 4 mm ID	100 L air	Cool to 4°C	5 days recommended

1 All glass containers should have Teflon cap liners or septa.
2 See Attachment E. Preservation and maximum holding time allowances per 40 CFR 136.

ATTACHMENT B

ADDITIONAL REQUIRED CONTAINERS, PRESERVATION TECHNIQUES, AND HOLDING TIMES

Parameter Number/Name	Container[1]	Preservation[2][3]	Maximum Holding Time[4]
INORGANIC TESTS:			
Acidity	P, G	Cool, 4°C	14 days
Alkalinity	P, G	Cool, 4°C	14 days
Ammonia - Nitrogen	P, G	Cool, 4°C; H_2SO_4 to pH 2	28 days
Biochemical Oxygen Demand (BOD)	P, G	Cool, 4°C	48 hours
Bromide	P, G	None required	28 days
Chemical Oxygen Demand (COD)	P, G	Cool, 4°C; H_2SO_4 to pH 2	28 days
Chloride	P, G	None required	28 days
Chlorine, Total Residual	P, G	None required	Analyze immediately
Color	P, G	Cool, 4°C	48 hours
Cyanide, Total and Amenable to Chlorination	P, G	Cool, 4°C; NaOH to pH 12; 0.6 g ascorbic acid[5]	14 days[6]
Fluoride	P	None required	28 days
Hardness	P, G	HNO_3 to pH 2; H_2SO_4 to pH 2	6 months
Total Kjeldahl and Organic Nitrogen	P, G	Cool, 4°C; H_2SO_4 to pH 2	28 days
Nitrate - Nitrogen	P, G	None required	48 hours
Nitrate-Nitrite - Nitrogen	P, G	Cool, 4°C; H_2SO_4 to pH 2	28 days
Nitrite - Nitrogen	P, G	Cool, 4°C	48 hours
Oil & Grease	G	Cool, 4°C; H_2SO_4 to pH 2	28 days
Total Organic Carbon (TOC)	P, G	Cool, 4°C; HCl or H_2SO_4 to pH 2	28 days
Orthophosphate	P, G	Filter immediately; Cool, 4°C	48 hours
Oxygen, Dissolved-Probe	G Bottle & top	None required	Analyze immediately
Oxygen, Dissolved-Winkler	G Bottle & top	Fix on site and store in dark	8 hours
Phenols	G	Cool, 4°C; H_2SO_4 to pH 2	28 days
Phosphorus, Total	P, G	Cool, 4°C; H_2SO_4 to pH 2	28 days
Residue, Total	P, G	Cool, 4°C	7 days
Residue, Filterable (TDS)	P, G	Cool, 4°C	7 days
Residue, Nonfilterable (TSS)	P, G	Cool, 4°C	7 days
Residue, Settleable	P, G	Cool, 4°C	48 hours
Residue, Volatile (Ash Content)	P, G	Cool, 4°C	7 days
Silica	P	Cool, 4°C	28 days
Specific Conductance	P, G	Cool, 4°C	28 days
Sulfate	P, G	Cool, 4°C	28 days

ATTACHMENT B
ADDITIONAL REQUIRED CONTAINERS, PRESERVATION TECHNIQUES, AND HOLDING TIMES
PAGE TWO

Parameter Number/Name	Container[1]	Preservation[2][3]	Maximum Holding Time[4]
INORGANIC TESTS (Cont'd):			
Sulfide	P, G	Cool, 4°C; add zinc acetate plus sodium hydroxide to pH 9	7 days
Sulfite	P, G	None required	Analyze immediately
Turbidity	P, G	Cool, 4°C	48 hours
METALS:[7]			
Chromium VI (Hexachrome)	P, G	Cool, 4°C	24 hours
Mercury (Hg)	P, G	HNO_3 to pH 2	28 days
Metals, except Chromium VI and Mercury	P, G	HNO_3 to pH 2	6 months
ORGANIC TESTS:[8]			
Purgeable Halocarbons	G, Teflon-lined septum	Cool, 4°C; 0.008% $Na_2S_2O_3$[5]	14 days
Purgeable Aromatic Hydrocarbons	G, Teflon-lined septum	Cool, 4°C; 0.008% $Na_2S_2O_3$[5] HCl to pH 2 [9]	14 days
Acrolein and Acrylonitrile	G, Teflon-lined septum	Cool, 4°C; 0.008% $Na_2S_2O_3$[5] adjust pH to 4-5 [10]	14 days
Phenols[11]	G, Teflon-lined cap	Cool, 4°C; 0.008% $Na_2S_2O_3$[5]	7 days until extraction; 40 days after extraction
Benzidines[11],[12]	G, Teflon-lined cap	Cool, 4°C; 0.008% $Na_2S_2O_3$[5]	7 days until extraction[13]
Phthalate esters[11]	G, Teflon-lined cap	Cool, 4°C	7 days until extraction; 40 days after extraction
Nitrosamines[11],[14]	G, Teflon-lined cap	Cool, 4°C; store in dark; 0.008% $Na_2S_2O_3$[5]	7 days until extraction; 40 days after extraction
PCBs[11]	G, Teflon-lined cap	Cool, 4°C	7 days until extraction; 40 days after extraction
Nitroaromatics & Isophorone[11]	G, Teflon-lined cap	Cool, 4°C; 0.008% $Na_2S_2O_3$[5]; store in dark	7 days until extraction; 40 days after extraction
Polynuclear Aromatic Hydrocarbons (PAHs)[11],[14]	G, Teflon-lined cap	Cool, 4°C; 0.008% $Na_2S_2O_3$[5]; store in dark	7 days until extraction; 40 days after extraction
Haloethers[11]	G, Teflon-lined cap	Cool, 4°C; 0.008% $Na_2S_2O_3$[5]	7 days until extraction; 40 days after extraction
Dioxin/Furan (TCDD/TCDF)[11]	G, Teflon-lined cap	Cool, 4°C; 0.008% $Na_2S_2O_3$[5]	7 days until extraction; 40 days after extraction

ATTACHMENT B
ADDITIONAL REQUIRED CONTAINERS, PRESERVATION TECHNIQUES, AND HOLDING TIMES
PAGE THREE

(1) Polyethylene (P): generally 500 ml or Glass (G): generally 1L.
(2) Sample preservation should be performed immediately upon sample collection. For composite chemical samples each aliquot should be preserved at the time of collection. When use of an automated sampler makes it impossible to preserve each aliquot, then chemical samples may be preserved by maintaining at 4°C until compositing and sample splitting is completed.
(3) When any sample is to be shipped by common carrier or sent through the United States Mail, it must comply with the Department of Transportation Hazardous Materials Regulations (49 CFR Part 172).
(4) Samples should be analyzed as soon as possible after collection. The times listed are the maximum times that samples may be held before analysis and still be considered valid. Samples may be held for longer periods only if the permittee, or monitoring laboratory, has data on file to show that the specific types of samples under study are stable for the longer periods, and has received a variance from the Regional Administrator.
(5) Should only be used in the presence of residual chlorine.
(6) Maximum holding time is 24 hours when sulfide is present. Optionally, all samples may be tested with lead acetate paper before pH adjustments are made to determine if sulfide is present. If sulfide is present, it can be removed by the addition of cadmium nitrate powder until a negative spot test is obtained. The sample is filtered and then NaOH is added to pH 12.
(7) Samples should be filtered immediately on site before adding preservative for dissolved metals.
(8) Guidance applies to samples to be analyzed by GC, LC, or GC/MS for specific compounds.
(9) Sample receiving no pH adjustment must be analyzed within 7 days of sampling.
(10) The pH adjustment is not required if acrolein will not be measured. Samples for acrolein receiving no pH adjustment must be analyzed within 3 days of sampling.
(11) When the extractable analytes of concern fall within a single chemical category, the specified preservative and maximum holding times should be observed for optimum safeguard of sample integrity. When the analytes of concern fall within two or more chemical categories, the sample may be preserved by cooling to 4°C, reducing residual chlorine with 0.008% sodium thiosulfate, storing in the dark, and adjusting the pH to 6-9; samples preserved in this manner may be held for 7 days before extraction and for 40 days after extraction. Exceptions to this optional preservation and holding time procedure are noted in footnote 5 (re: the requirement for thiosulfate reduction of residual chlorine) and footnotes 12, 13 (re: the analysis of benzidine).
(12) If 1,2-diphenylthydrazine is likely to be present, adjust the pH of the sample to 4.0±0.2 to prevent rearrangement to benzidine.
(13) Extracts may be stored up to 7 days before analysis if storage is conducted under an inert (oxidant-free) atmosphere.
(14) For the analysis of diphenylnitrosamine, add 0.008% $Na_2S_2O_3$ and adjust pH to 7-10 with NaOH within 24 hours of sampling.
(15) The pH adjustment may be performed upon receipt at the laboratory and may be omitted if the samples are extracted within 72 hours of collection. For the analysis of aldrin, add 0.008% $Na_2S_2O_3$.

TABLE OF CONTENTS

SECTION **PAGE**

1.0 PURPOSE **2**

2.0 SCOPE **2**

3.0 GLOSSARY **2**

4.0 RESPONSIBILITIES AND PERSONNEL QUALIFICATIONS **2**

5.0 PROCEDURES **2**

5.1 SITE LOGBOOK 2
5.1.1 General 2
5.1.2 Photographs 3
5.2 FIELD NOTEBOOKS 3
5.3 FIELD FORMS 4
5.3.1 Sample Collection, Labeling, Shipment, Request for Analysis, and Field Test Results. 4
5.3.2 Hydrogeological and Geotechnical Forms 5
5.3.3 Equipment Calibration and Maintenance Form 6
5.4 FIELD REPORTS 6
5.4.1 Daily Activities Report 7
5.4.2 Weekly Status Reports 7

6.0 LISTING OF FIELD FORMS ON THE TtNUS INTRANET SITE **7**

ATTACHMENTS

A TYPICAL SITE LOGBOOK ENTRY **9**
B SAMPLE LABEL **10**
C CHAIN-OF-CUSTODY RECORD FORM **11**
D CHAIN-OF-CUSTODY SEAL **12**

1.0 PURPOSE

The purpose of this Standard Operating Procedure (SOP) is to identify and designate the field data record forms, logs, and reports generally initiated and maintained for documenting Tetra Tech NUS, Inc. (TtNUS) field activities.

2.0 SCOPE

Documents presented within this SOP (or equivalents) shall be used for all TtNUS field activities, as applicable. Other or additional documents may be required by specific client contracts or project planning documents.

3.0 GLOSSARY

None.

4.0 RESPONSIBILITIES AND PERSONNEL QUALIFICATIONS

Project Manager (PM) - The PM is responsible for obtaining hardbound controlled-distribution logbooks (from the appropriate source), as needed. In addition, the Project Manager is responsible for placing all field documentation used in site activities (i.e., records, field reports, sample data sheets, field notebooks, and the site logbook) in the project's central file upon the completion of field work.

Field Operations Leader (FOL) - The FOL is responsible for ensuring that the site logbook, notebooks, and all appropriate and current forms and field reports included in this SOP (and any additional forms required by the contract) are correctly used, accurately filled out, and completed in the required time frame.

General personnel qualifications for field documentation activities include the following:

- Occupational Safety and Health Administration (OSHA) 40-hour and applicable refresher training.
- Capability of performing field work under the expected physical and environmental (i.e., weather) conditions.
- Familiarity with appropriate procedures for documentation, handling, packaging, and shipping.

5.0 PROCEDURES

5.1 SITE LOGBOOK

5.1.1 General

The site logbook is a hard-bound, paginated, controlled-distribution record book in which all major on-site activities are documented. At a minimum, record or reference the following activities/events (daily) in the site logbook:

- All field personnel present
- Arrival/departure times and names of site visitors
- Times and dates of health and safety training
- Arrival/departure times of equipment
- Times and dates of equipment calibration

- Start and/or completion of borehole, trench, monitoring well installation activities, etc.
- Daily on-site activities
- Sample pickup information
- Health and safety issues (level of protection, personal protective equipment [PPE], etc.)
- Weather conditions

Maintain a site logbook for each project and initiate it at the start of the first on-site activity (e.g., site visit or initial reconnaissance survey). Make entries every day that on-site activities take place involving TtNUS or subcontractor personnel. Upon completion of the fieldwork, provide the site logbook to the PM or designee for inclusion in the project's central file.

Record the following information on the cover of each site logbook:

- Project name
- TtNUS project number
- Sequential book number
- Start date
- End date

Information recorded daily in the site logbook need not be duplicated in other field notebooks (see Section 5.2) but must summarize the contents of these other notebooks and refer to specific page locations in these notebooks for detailed information (where applicable). An example of a typical site logbook entry is shown in Attachment A.

If measurements are made at any location, either record the measurements and equipment used in the site logbook or reference the field notebook in which the measurements are recorded (see Attachment A).

Make all logbook, notebook, and log sheet entries in indelible ink (black pen is preferred). No erasures are permitted. If an incorrect entry is made, cross out the entry with a single strike mark, initial, and date it. At the completion of entries by any individual, the logbook pages used must be signed and dated by the person making the entries. The site logbook must also be signed by the FOL at the end of each day.

5.1.2 Photographs

Sequentially number movies, slides, or photographs taken of a site or any monitoring location to correspond to logbook/notebook entries. Enter the name of the photographer, date, time, site location, site description, and weather conditions in the logbook/notebook as the photographs are taken. A series entry may be used for rapid-sequence photographs. The photographer is not required to record the aperture settings and shutter speeds for photographs taken within the normal automatic exposure range. However, special lenses, films, filters, and other image-enhancement techniques must be noted in the logbook/notebook. If possible, such techniques shall be avoided because they can adversely affect the accuracy of photographs. Chain-of-custody procedures depend on the subject matter, type of camera (digital or film), and the processing it requires. Follow chain-of-custody procedures for film used for aerial photography, confidential information, or criminal investigation. After processed, consecutively number the slides of photographic prints and label them according to the logbook/notebook descriptions. Docket the site photographs and associated negatives and/or digitally saved images to compact disks into the project's central file.

5.2 FIELD NOTEBOOKS

Key field team personnel may maintain a separate dedicated field notebook to document the pertinent field activities conducted directly under their supervision. For example, on large projects with multiple investigative sites and varying operating conditions, the Health and Safety Officer may elect to maintain a

separate field notebook. Where several drill rigs are in operation simultaneously, each site geologist assigned to oversee a rig must maintain a field notebook.

5.3 FIELD FORMS

All TtNUS field forms (see list in Section 6.0 of this SOP) can be found on the company's intranet site (http://intranet.ttnus.com) under Field Log Sheets. Forms may be altered or revised for project-specific needs, subject to client approval. Care must be taken to ensure that all essential information can be documented. Guidelines for completing these forms can be found in the related sampling SOPs.

5.3.1 Sample Collection, Labeling, Shipment, Request for Analysis, and Field Test Results

5.3.1.1 Sample Log Sheet

Sample log sheets are used to record specified types of data while sampling. The data recorded on these sheets are useful in describing the sample as well as pointing out any problems, difficulties, or irregularities encountered during sampling. Complete a sample log sheet for each sample obtained, including field quality control (QC) samples.

5.3.1.2 Sample Label

A typical sample label is illustrated in Attachment B. Complete the required information on the adhesive labels and apply them to every sample container. Obtain sample labels from the appropriate program/project source, request that they be electronically generated in house, or request them the laboratory subcontractor.

5.3.1.3 Chain-of-Custody Record

The chain-of-custody record is a multi-part form that is initiated as samples are acquired and accompanies a sample (or group of samples) as they are transferred from person to person. This form must be used as follows for any samples collected for chemical or geotechnical analysis whether the analyses are performed on site or off site:

- Retain one carbonless copy of the completed chain-of custody form in the field.
- Send one copy is sent to the PM (or designee)
- Send the original to the laboratory with the associated samples. Place the original (top, signed copy) of the chain-of custody form inside a large Ziploc®-type bag taped inside the lid of the shipping cooler. If multiple coolers are sent but are included on one chain-of custody form, send the form with the cooler containing vials for volatile organic compound (VOC) analysis or the cooler with the air bill attached. Indicate on the air bill how many coolers are included with that shipment.

An example of a chain-of-custody form is provided as Attachment C. After the samples are received at the laboratory, the sample cooler and contents are checked and any problems are noted on the enclosed chain-of custody form (any discrepancies between the sample labels and chain-of custody form and any other problems that are noted are resolved through communication between the laboratory point-of-contact and the TtNUS PM). The chain-of custody form is signed and copied. The laboratory will retain the copy, and the original becomes part of the samples' corresponding analytical data package.

5.3.1.4 Chain-of-Custody Seal

Attachment D is an example of a custody seal. The custody seal is an adhesive-backed label that is part of a chain-of-custody process and is used to prevent tampering with samples after they have been collected in the field and sealed in coolers for transport to the laboratory. Sign and date custody seals

and affix them across the lid and body of each cooler (front and back) containing environmental samples (see SOP SA-6.1). Obtain custody seals from the laboratory (if available) or purchase them from a supplier.

5.3.1.5 Geochemical Parameters Log Sheets

Complete Field Analytical Log Sheets to record geochemical and/or natural attenuation field test results.

5.3.2 Hydrogeological and Geotechnical Forms

5.3.2.1 Groundwater Level Measurement Sheet

Complete a Groundwater Level Measurement Sheet for each round of water level measurements made at a site.

5.3.2.2 Data Sheet for Pumping Test

During the performance of a pumping test (or an in-situ hydraulic conductivity test), a large amount of data must be recorded, often within a short time period. Use a Pumping Test Data Sheet to facilitate this task by standardizing the data collection format for the pumping well and observation wells, and allowing the time interval for collection to be established in advance.

5.3.2.3 Packer Test Report Form

Complete a Packer Test Report Form for each well at which a packer test is conducted.

5.3.2.4 Boring Log

Complete a Summary Log of Boring, or Boring Log for each soil boring performed to document the materials encountered, operation and driving of casing, and locations/depths of samples collected. In addition, if volatile organics are monitored on cores, samples, cuttings from the borehole, or breathing zone, (using a photoionization detector [PID] or flame ionization detector [FID]), enter these readings on the boring log at the appropriate depth. When they become available, enter the laboratory sample number, concentrations of key contaminants, or other pertinent information in the "Remarks" column. This feature allows direct comparison of contaminant concentrations with soil characteristics.

5.3.2.5 Monitoring Well Construction Details Form

Complete a Monitoring Well Construction Details Form for every monitoring well, piezometer, or temporary well point installed. This form contains specific information on length and type of well riser pipe and screen, backfill, filter pack, annular seal and grout characteristics, and surface seal characteristics. This information is important in evaluating the performance of the monitoring well, particularly in areas where water levels show temporal variation or where there are multiple (immiscible) phases of contaminants. Depending on the type of monitoring well (in overburden or bedrock, stick-up or flush mount), different forms are used.

5.3.2.6 Test Pit Log

When a test pit or trench is constructed for investigative or sampling purposes, a Test Pit Log must be filled out by the responsible field geologist or sampling technician.

5.3.2.7 ~~Miscellaneous Monitoring Well Forms~~

~~Miscellaneous monitoring well forms that may be required on a project-specific basis include the Monitoring Well Materials Certificate of Conformance and Monitoring Well Development Record. Use a Monitoring Well Materials Certificate of Conformance to document all materials utilized during each monitoring well installation. Use a Monitoring Well Development Record to document all well development activities.~~

5.3.2.8 Miscellaneous Field Forms – Quality Assurance and Checklists

Miscellaneous field forms/checklists forms that may be required on a project-specific basis include the following:

- Container Sample and Inspection Sheet – use this form when a container (drum, tank, etc.) is sampled and/or inspected.
- QA Sample Log Sheet – use this form when a QA sample such as an equipment rinsate blank, source blank, etc. is collected.
- Field Task Modification Request (FTMR) – use this form to document deviations from the project planning documents. The FOL is responsible for initiating the FTMRs. Maintain copies of all FTMRs with the on-site planning documents, and place originals in the final evidence file.
- Field Project Daily Activities Checklist and Field Project Pre-Mobilization Checklist – used these during both the planning and field effort to ensure that all necessary tasks are planned for and completed. These two forms are not requirements but are useful tools for most field work.

5.3.3 Equipment Calibration and Maintenance Form

The calibration or standardization of monitoring, measuring, or test equipment is necessary to ensure the proper operation and response of the equipment, to document the accuracy, precision, or sensitivity of the measurements, and determine if correction should be applied to the readings. Some items of equipment require frequent calibration, others infrequent. Some are calibrated by the manufacturer, others by the user.

Each instrument requiring calibration has its own Equipment Calibration Log, which documents that the manufacturer's instructions were followed for calibration of the equipment, including frequency and type of standard or calibration device. Maintain an Equipment Calibration Log for each electronic measuring device used in the field; make entries for each day the equipment is used or in accordance with manufacturer recommendations.

5.4 FIELD REPORTS

The primary means of recording on-site activities is the site logbook. Other field notebooks may also be maintained. These logbooks and notebooks (and supporting forms) contain detailed information required for data interpretation or documentation but are not easily used for tracking and reporting of progress. Furthermore, the field logbook/notebooks remain on site for extended periods of time and are thus not accessible for timely review by project management. Other reports useful for tracking and reporting the progress of field activities are described below.

5.4.1 Daily Activities Report

To provide timely oversight of on-site contractors, complete and submit Daily Activities Reports (DARs) as described below.

5.4.1.1 Description

The DAR documents the activities and progress for each day's field work. Complete this report on a daily basis whenever there are drilling, test pitting, well construction, or other related activities occurring that involve subcontractor personnel. These sheets summarize the work performed and form the basis of payment to subcontractors. The DAR form can be found on the TtNUS intranet site.

5.4.1.2 Responsibilities

It is the responsibility of the rig geologist to complete the DAR and obtain the driller's signature acknowledging that the times and quantities of material entered are correct.

5.4.1.3 Submittal and Approval

At the end of the shift, the rig geologist must submit the DAR to the FOL for review and filing. The Daily Activities Report is not a formal report and thus requires no further approval. The DARs are retained by the FOL for use in preparing the site logbook and in preparing weekly status reports for submission to the PM.

5.4.2 Weekly Status Reports

To facilitate timely review by project management, photocopies of logbook/notebook entries may be made for internal use.

In addition to those described herein, other summary reports may also be contractually required.

All TtNUS field forms can be found on the company's intranet site at http://intranet.ttnus.com under Field Log Sheets.

6.0 LISTING OF FIELD FORMS ON THE TtNUS INTRANET SITE

- Boring Log
- Container Sample and Inspection Sheet
- Daily Activities Checklist
- Daily Activities Record
- Equipment Calibration Log
- Field Task Modification Request
- Field Analytical Log sheet - Geochemical Parameters
- Groundwater Level Measurement Sheet
- Groundwater Sample Log Sheet
- Hydraulic Conductivity Test Data Sheet
- Low Flow Purge Data Sheet
- Bedrock Monitoring Well Construction (Stick Up)
- Bedrock Monitoring Well Construction Flush Mount
- Bedrock Monitoring Well Construction Open Hole
- Confining Layer Monitoring Well Construction
- Monitoring Well Development Record

- Monitoring Well Materials Certificate of Conformance
- Overburden Monitoring Well Construction Flush Mount
- Overburden Monitoring Well Construction Stick Up
- Packer Test Report Form
- Pumping Test Data Sheet
- QA Sample Log Sheet
- Soil/Sediment Sample Log Sheet
- Surface Water Sample Log Sheet
- Test Pit Log
- Field Project Pre-Mobilization Checklist

ATTACHMENT A
TYPICAL SITE LOGBOOK ENTRY

START TIME: _____ DATE: _____

SITE LEADER: _____

PERSONNEL:

TtNUS	DRILLER	SITE VISITORS
_____	_____	_____
_____	_____	_____
_____	_____	_____

WEATHER: Clear, 68°F, 2-5 mph wind from SE

ACTIVITIES:

1. Steam jenney and fire hoses were set up.
2. Drilling activities at well ____ resumes. Rig geologist was _____. See Geologist's Notebook, No. 1, page 29-30, for details of drilling activity. Sample No. 123-21-S4 collected; see sample logbook, page 42. Drilling activities completed at 11:50 and a 4-inch stainless steel well installed. See Geologist's Notebook, No. 1, page 31, and well construction details for well _____.
3. Drilling rig No. 2 steam-cleaned at decontamination pit. Then set up at location of well _____.
4. Well _____ drilled. Rig geologist was _____. See Geologist's Notebook, No. 2, page ____ for details of drilling activities. Sample numbers 123-22-S1, 123-22-S2, and 123-22-S3 collected; see sample logbook, pages 43, 44, and 45.
5. Well _____ was developed. Seven 55-gallon drums were filled in the flushing stage. The well was then pumped using the pitcher pump for 1 hour. At the end of the hour, water pumped from well was "sand free."
6. EPA remedial project manger arrives on site at 14:25 hours.
7. Large dump truck arrives at 14:45 and is steam-cleaned. Backhoe and dump truck set up over test pit _____.
8. Test pit _____ dug with cuttings placed in dump truck. Rig geologist was _____. See Geologist's Notebook, No. 1, page 32, for details of test pit activities. Test pit subsequently filled. No samples taken for chemical analysis. Due to shallow groundwater table, filling in of test pit ___ resulted in a very soft and wet area. A mound was developed and the area roped off.
9. Express carrier picked up samples (see Sample Logbook, pages 42 through 45) at 17:50 hours. Site activities terminated at 18:22 hours. All personnel off site, gate locked.

_____

Field Operations Leader

ATTACHMENT B
SAMPLE LABEL

Tetra Tech NUS, Inc. 661 Andersen Drive Pittsburgh, 15220 (412)921-7090	**Project:** **Site:** **Location:**	
Sample No:		**Matrix:**
Date:	**Time:**	**Preserve:**
Analysis:		
Sampled by:	**Laboratory:**	

ATTACHMENT C
CHAIN-OF-CUSTODY RECORD FORM

TETRA TECH NUS, INC. CHAIN OF CUSTODY | NUMBER 3413 | PAGE ____ OF _____

PROJECT NO:	FACILITY:	PROJECT MANAGER	PHONE NUMBER	LABORATORY NAME AND CONTACT:
SAMPLERS (SIGNATURE)		FIELD OPERATIONS LEADER	PHONE NUMBER	ADDRESS
		CARRIER/WAYBILL NUMBER		CITY, STATE

STANDARD TAT ☐
RUSH TAT ☐
☐ 24 hr. ☐ 48 hr. ☐ 72 hr. ☐ 7 day ☐ 14 day

CONTAINER TYPE PLASTIC (P) or GLASS (G)
PRESERVATIVE USED
TYPE OF ANALYSIS

DATE YEAR	TIME	SAMPLE ID	LOCATION ID	TOP DEPTH (FT)	BOTTOM DEPTH (FT)	MATRIX (GW, SO, SW, SD, QC, ETC.)	COLLECTION METHOD GRAP (G) COMP (C)	No. OF CONTAINERS									COMMENTS

1. RELINQUISHED BY	DATE	TIME	1. RECEIVED BY	DATE	TIME
2. RELINQUISHED BY	DATE	TIME	2. RECEIVED BY	DATE	TIME
3. RELINQUISHED BY	DATE	TIME	3. RECEIVED BY	DATE	TIME

COMMENTS

DISTRIBUTION: WHITE (ACCOMPANIES SAMPLE) YELLOW (FIELD COPY) PINK (FILE COPY)

4/02R
FORM NO. TtNUS-001

ATTACHMENT D
CHAIN-OF-CUSTODY SEAL

CUSTODY SEAL	**CUSTODY SEAL**
Date	**Date**
Signature	**Signature**

TABLE OF CONTENTS

SECTION **PAGE**

1.0 PURPOSE **2**

2.0 SCOPE AND APPLICABILITY **2**

3.0 GLOSSARY **2**

4.0 RESPONSIBILITIES AND PERSONNEL QUALIFICATIONS **3**

5.0 HEALTH AND SAFETY **3**

6.0 EQUIPMENT LIST **3**

7.0 PROCEDURES **4**

- **7.1 Decontamination Pad Design/Construction Considerations** **5**
- 7.1.1 Temporary Decontamination Pads 5
- 7.1.2 Decontamination Activities at Drill Rigs/DPT Units 7
- 7.1.3 Decontamination Activities at Remote Sample Locations 7
- **7.2 Equipment Decontamination Procedures** **7**
- 7.2.1 Monitoring Well Sampling Equipment 7
- 7.2.2 Downhole Drilling Equipment 9
- 7.2.3 Soil/Sediment Sampling Equipment 11
- **7.3 Contact Waste/Materials** **11**
- 7.3.1 Investigation-Derived Wastes - Decontamination Wash Waters and Sediments 12
- **7.4 Decontamination Evaluation** **13**

ATTACHMENTS

A INVESTIGATION-DERIVED WASTE LABEL 15

1.0 PURPOSE

Decontamination is the process of removing and/or neutralizing site contaminants that have contacted and/or accumulated on equipment. The purpose of this Standard Operating Procedure (SOP) is to protect site personnel, the general public, and the environment while preserving or maintaining sample integrity. It is further intended through this procedure to describe the steps necessary for proper decontamination of drilling equipment, earth-moving equipment , chemical sampling equipment and field operation and analytical equipment.

2.0 SCOPE AND APPLICABILITY

This procedure applies to all equipment used to provide access to/acquire environmental samples that may have become contaminated through direct contact with contaminated media including air, water, and soil. This equipment includes drilling and heavy equipment and chemical sampling and field analytical equipment. Where technologically and economically feasible, single-use sealed disposable equipment will be employed to minimize the potential for cross-contamination. This SOP also provides general reference information on the control of contaminated materials.

Decontamination methods and equipment requirements may differ from one project to another. General equipment items are specified in Section 6.0, but project-specific equipment must be obtained to address the project-specific decontamination procedures presented in Section 7.0 and applicable subsections.

3.0 GLOSSARY

Alconox/Liquinox - A brand of phosphate-free laboratory-grade detergent.

Decontamination Solution - A solution selected/identified in the Health and Safety Plan or Project-Specific Quality Assurance Plan. The solution is selected and employed as directed by the project chemist/health and safety professional.

Deionized Water (DI) - Tap water that has been treated by passing through a standard deionizing resin column. This water may also pass through additional filtering media to attain various levels of analyte-free status. The DI water should meet College of American Pathologists (CAP) and National Committee for Clinical Laboratory Standards (NCCLS) specifications for reagent-grade Type I water.

Potable Water - Tap water from any municipal water treatment system. Use of an untreated potable water supply is not an acceptable substitute for tap water.

Pressure Washing - Process employing a high-pressure pump and nozzle configuration to create a high-pressure spray of potable water. High-pressure spray is employed to remove solids from equipment.

Solvent – A liquid in which solid chemicals or other liquids are dissolved. The solvent of choice is pesticide-grade isopropanol. Use of other solvents (methanol, acetone, or hexane) may be required for particular projects or for a particular purpose (e.g., removal of concentrated waste) and must be justified in the project planning documents. For example, it may be necessary to use hexane when analyzing for trace levels of pesticides, PCBs, or fuels. In addition, because many of these solvents are not miscible in water, the equipment should be air dried prior to use. Solvents should not be used on PVC equipment or well construction materials.

Steam Pressure Washing - A cleaning method employing a high-pressure spray of heated potable water to remove various organic/inorganic chemicals from equipment.

4.0 RESPONSIBILITIES AND PERSONNEL QUALIFICATIONS

Project Manager - Responsible for ensuring that all field activities are conducted in accordance with approved project plan(s) requirements.

Decontamination Personnel - Individuals assigned the task of decontamination. It is the responsibility of these individuals to understand the use and application of the decontamination process and solutions as well as the monitoring of that process to ensure that it is working properly. This is accomplished through visual evaluation, monitoring instrument scanning of decontaminated items, and/or through the collection of rinsate blanks to verify contaminant removal.

Field Operations Leader (FOL) - Responsible for the implementation of project-specific planning documents. This includes on-site verification that all field activities are performed in compliance with approved SOPs or as otherwise dictated by the approved project plan(s). The FOL is also responsible for the completion and accuracy of all field documentation.

Site Safety Officer (SSO) - Exercises shared responsibility with the FOL concerning decontamination effectiveness. All equipment arriving on site (as part of the equipment inspection), leaving the site, and moving between locations is required to go through a decontamination evaluation. This is accomplished through visual examination and/or instrument screening to determine the effectiveness of the decontamination process. Improper or incomplete decontamination is sufficient to restrict equipment from entering the site, exiting the site, or moving to a new location on the site until the objectives are successfully completed.

General personnel qualifications for decontamination activities include the following:

- Occupational Safety and Health Administration (OSHA) 40-hour and applicable refresher training.
- Capability of performing field work under the expected physical and environmental (i.e., weather) conditions.
- Familiarity with appropriate decontamination procedures.

5.0 HEALTH AND SAFETY

In addition to the health and safety issues and reminders specified in subsections of this SOP, the following considerations and requirements must be observed as SOPs for field equipment decontamination activities:

- If any solvents or hazardous chemicals (e.g., isopropyl alcohol) are to be used in equipment decontamination activities, the FOL must first obtain the manufacturer's/supplier's Material Safety Data Sheet (MSDS) and assure that it is reviewed by all users (prior to its use), added to the site Hazardous Chemical Inventory, and maintained on site as part of the project Hazard Communication Program.
- Review and observe specific health and safety requirements (e.g., personal protective equipment [PPE]) specified in the project-specific health and safety plan for this activity.

6.0 EQUIPMENT LIST

- Wood for decontamination pad construction, when applicable (see Section 7.1).

- Tools for constructing decontamination pad frame, when applicable (see Section 7.1).
- Visqueen sheeting or comparable material to cover decontamination pad frame, when applicable (see Section 7.1).
- Wash/drying racks for auger flights and drill/drive rods, when applicable (see Section 7.2).
- PPE as specified in the project health and safety plan.
- Soap and water for washing and rinsing.
- Deionized water for final rinsing.
- Solvents (e.g., pesticide-grade isopropanol) for rinsing (see applicable portions of Section 7.2).
- Tubs, buckets, etc. for containerizing rinse water (see applicable portions of Section 7.2).
- Sample bottles for collecting rinsate blanks (see Section 7.2).
- Calibrated photoionization detector (PID) or flame ionization detector (FID) to monitor decontaminated equipment for organic vapors generated through the existence of residual contamination or the presence of decontamination solvent remaining after the piece was rinsed.
- Aluminum foil or clear clean plastic bag for covering cleaned equipment (see applicable portions of Section 7.2).
- Paper towels or cloths for wiping.
- Brushes, scrapers, or other hand tools useful for removing solid materials from equipment.
- Clear plastic wrap for covering or wrapping large decontaminated equipment items (see Section 7.2.2).
- Drum-moving equipment for moving filled waste drums (optional) (see Section 7.3).
- Drum labels for waste drums (see Attachment A).

7.0 PROCEDURES

The process of decontamination is accomplished through the removal of contaminants, neutralization of contaminants, or isolation of contaminants. To accomplish this activity, preparation is required including site preparation, equipment selection, and evaluation of the decontamination requirements and processes. Site contaminant types, concentrations, and media types are primary drivers in the selection of the types of decontamination and where it will be conducted. For purposes of this SOP, discussion is limited to decontamination procedures for general environmental investigations.

Decontamination processes will be performed at the location(s) specified in project-specific planning documents. Typical decontamination locations include the following:

- Temporary decontamination pads/facilities
- Sample locations
- Centralized decontamination pad/facilities

- Combination of some or all of the above

The following discussion includes general considerations for the decontamination process. Specific construction and implementation procedures will be as specified in the project-specific planning documents and/or may be as dictated by site-specific conditions as long as the intent of the requirements in the planning documents is met. This intent is to contain any residual fluids and solids generated through the decontamination process.

7.1 Decontamination Pad Design/Construction Considerations

7.1.1 Temporary Decontamination Pads

Temporary decontamination pads may be constructed at satellite locations within the site area in support of temporary work areas. These structures are generally constructed to support the decontamination of heavy equipment such as drill rigs and earth-moving equipment but can be employed for smaller articles.

The purpose of the decontamination pad is to contain wash waters and potentially contaminated soil generated during decontamination procedures. Therefore, construction of these pads should take into account the following considerations:

- Site location – The decontamination site selected should be far enough from the work site to maximize decontamination effectiveness while minimizing travel distance. The location of the decontamination site shall be selected to provide, in the judgment of the FOL or FOL designee, compliance with as many of the following characteristics as practicable:

  - Well removed from pedestrian/vehicle thoroughfares.

  - Avoidance of areas where control/custody cannot be maintained.

  - Avoidance of areas where potential releases of contaminated media or decontamination fluids may be compounded through access to storm water transport systems, streams, or other potentially sensitive areas.

  - Avoidance of potentially contaminated areas.

  - Avoidance of areas too close to the ongoing operation, where cross-contamination may occur.

  The selected decontamination site should include the following, where possible:

  - Areas where potable water and electricity are provided.

> ***Safety Reminder***
>
> When utilizing electrical power sources, either hard-wired or portable-generated sources, ensure that:
>
> - All power is routed through a Ground Fault Circuit Interrupter (GFCI).
>
> - All power cords are in good condition (no physical damage), rated for the intended energy load, and designated for outdoor use.
>
> In situations where accomplishing these elements is not possible, it will be necessary to implement a site electrical grounding program.

- Areas where support activities such as removing decontamination waters soil and sediment are possible without entering an active exclusion zone.

- Areas that offer sufficient size to carry out the specific decontamination sequence.

- Decontamination pad (decon pad) – The decon pad shall be constructed to meet the following characteristics:

  - Size – The size of the pad should be sufficient to accept the equipment to be decontaminated as well as permitting free movement around the equipment by the personnel conducting the decontamination. The size should permit these movements utilizing pressure/steam washer wands and hoses and minimizing splash due to work in close quarters.

  - Slope – An adequate slope will be constructed to permit the collection of water and potentially contaminated soil within a trough or sump constructed at one end. The collection point for wash waters should be of adequate distance that the decontamination workers do not have to walk through the wash waters while completing their tasks. Because the pad will be sloped, place a light coating of sand over the plastic to minimize potential slips and falls. See the text about liners below.

  - Sidewalls – The sidewalls shall be at least 6 inches in height (or as high as possible if 6 inches is not achievable) to provide adequate containment for wash waters and soil. If splash represents a potential problem, splash guards should be constructed to control overspray. Sidewalls may be constructed of wood, inflatables, sand bags, etc. to permit containment. Splash guards are typically wood frames with Visqueen coverings to control overspray.

  - Liner – Depending on the types of equipment and decontamination method to be used, the liner should be of sufficient thickness to provide a puncture-resistant barrier between the decontamination operation and the unprotected environment. Care should be taken to examine the surface area prior to placing the liner to remove sharp articles (sticks, stones, debris) that could puncture the liner. Liners are intended to form an impermeable barrier. The thickness may vary from a minimum recommended thickness of 10 mil to 30 mil. The desired thickness may be achieved through layering materials of lighter construction. It should be noted that various materials (rubber, polyethylene sheeting) become slippery when wet. To minimize this potential hazard associated with a sloped liner, a light coating of sand shall be applied to provide traction as necessary.

  - Wash/drying racks – Auger flights, drill/drive rods, and similar equipment require racks positioned off of the ground to permit these articles to be washed, drained, and dried while secured from falling during this process.

For decontamination of direct-push technology (DPT) equipment, the pad may be as simple as a mortar tub containing buckets of soapy water for washing and an empty bucket to capture rinse waters. Decontamination may be conducted at the rear of the rig to permit rapid tool exchange.

- Maintenance – Maintain the decontamination area by:

  - Periodically clearing the work area of standing water, soil, and debris, and coiling hoses to aid in eliminating slip, trip, and fall hazards. In addition, these articles will reduce potential backsplash and cross-contamination.

- Regularly changing the decontamination fluids to ensure proper cleaning and prevent cross-contamination.

- PPE – Periodically evaluate the condition of, and maintain the decontamination equipment, including regular cleaning of face shields and safety glasses. This is critical to ensuring the safety of decontamination personnel and the integrity of the decontamination process, and it will ensure that equipment is functioning properly.

7.1.2 Decontamination Activities at Drill Rigs/DPT Units

During subsurface sampling activities including drilling and DPT activities, decontamination of drive rods, Macro Core Samplers, split spoons, etc. is typically conducted at an area adjacent to the operation. Decontamination is generally accomplished using a soap/water wash and rinse utilizing buckets and brushes. This area requires sufficient preparation to accomplish the decontamination objectives.

Buckets shall be placed within mortar tubs or similar secondary containment tubs to prevent splash and spills from reaching unprotected environmental media. Drying racks shall be employed as directed for temporary pads to permit parts to dry and be evaluated prior to use/reuse. Methodology regarding this activity is provided in Section 7.2.

7.1.3 Decontamination Activities at Remote Sample Locations

When sampling at remote locations, sampling equipment such as trowels and pumps/tubing should be evacuated of potentially contaminated media to the extent possible. This equipment should be wrapped in plastic for transport to the temporary/centralized decontamination location for final cleaning and disposition. Flushing and cleaning of single-use equipment such as disposable trowels, tubing, and surgeon's gloves may allow disposal of this equipment after visible soil and water remnants have been removed.

7.2 Equipment Decontamination Procedures

The following represents procedures to be employed for the decontamination of equipment that may have contacted and/or accumulated contamination through site investigation activities.

7.2.1 Monitoring Well Sampling Equipment

7.2.1.1 Groundwater sampling equipment – This includes pumps inserted into monitoring wells such as bladder pumps, Whale pumps, and Redi-Flo pumps and reusable bailers, etc.

1. Evacuate to the extent possible, any purge water within the pump/bailer.

2. Scrub using soap and water and/or steam clean the outside of the pump/bailer and, if applicable, the pump tubing.

3. Insert the pump and tubing/bailer into a clean container of soapy water. Pump/run a sufficient amount of soapy water through the pump/bailer to flush out any residual well water. After the pump is flushed, circulate soapy water through the pump to ensure that the internal components are thoroughly flushed.

4. Remove the pump and tubing/bailer from the container

5. Rinse external pump components using tap water.

6. Insert the pump and tubing/bailer into a clean container of tap water. Pump/run a sufficient amount of tap water through the pump/bailer to evacuate all of the soapy water (until clear).

> ***CAUTION***
> Do not rinse PE, PVC, and associated tubing with solvents –
> Use the procedures defined in the project-specific planning documents. If they are not defined, contact the FOL for guidance. The solvent rinse described in Step 7 may be omitted if groundwater does not contain oil, grease, PAHs, PCBs, or other hard to remove organic materials.

7. If groundwater contains or is suspected to contain oil, grease, PAHs, PCBs, or other hard to remove organic materials, rinse the equipment to be cleaned with pesticide-grade isopropanol.

8. Pass deionized water through the hose to flush out the tap water and solvent residue as applicable.

9. Drain residual deionized water to the extent possible.

10. Allow components of the equipment to air dry.

11. For bladder pumps, disassemble the pump and wash the internal components with soap and water, then rinse with tap water, isopropanol, and deionized water and allow to dry. After the parts are dry, conduct a visual inspection and a monitoring instrument scan to ensure that potential contaminants and all decontamination solvent have been removed. Collect a rinsate blank in accordance with the project-specific planning documents to ensure that the decontamination process is functioning as intended. The typical frequency of collection for rinsate blanks is 1 per 20 field samples. In addition, wipe samples or field tests such as UV light may be used.

12. Wrap pump/bailer in aluminum foil or a clear clean plastic bag for storage.

> ***SAFETY REMINDER***
> Remember when handling powered equipment to disconnect the power source and render the equipment to a zero energy state (both potential and kinetic) before opening valves, disconnecting lines, etc.

7.2.1.2 Electronic Water Level Indicators/Sounders/Tapes

During water level measurements, rinsing the extracted tape and probe with deionized water and wiping the surface of the extracted tape between locations is acceptable. However, periodic full decontamination should be conducted as follows:

1. Wash with soap and water
2. Rinse with tap water
3. Rinse with deionized water

> ***NOTE***
> In situations where oil, grease, free product, other hard to remove materials are encountered, probes and exposed tapes should be washed in hot soapy water. If probes or tapes cannot be satisfactorily decontaminated (they are still stained, discolored, etc.), they should be removed from service.

7.2.1.3 Miscellaneous Equipment

Miscellaneous equipment including analytical equipment (water quality testing equipment) shall be cleaned per manufacturers' instructions. This generally includes wiping the sensor housing and rinsing with tap and deionized water.

Coolers/shipping containers employed to ship samples are received from the laboratory in a variety of conditions including marginal to extremely poor. Coolers shall be evaluated prior to use for the following:

- Structural integrity – Coolers missing handles or having breaks in the outer housing should be removed and not used. Notify the laboratory that the risk of shipping samples in the cooler(s) provided is too great and request a replacement unit.

- Cleanliness – As per protocol, only volatile organic samples are accompanied by a trip blank. If a cooler's cleanliness is in question (visibly dirty/stained) or if there are noticeable odors, the cooler should be decontaminated prior to use as follows:

  1. Wash with soap and water
  2. Rinse with tap water
  3. Dry

If these measures fail to clean the cooler to an acceptable level, remove the unit from use as a shipping container and ask the cooler provider (e.g., the analytical laboratory) to provide a replacement unit.

7.2.2 Downhole Drilling Equipment

This includes any portion of the drill rig that is over the borehole, including auger flights, drill stems, rods, and associated tooling that would extend over the borehole. The following procedure is to be employed prior to initiating the drilling/sampling activity, then between locations:

> ***CAUTION***
> Exercise care when using scrapers to remove soil and debris from downhole drilling equipment. Inadvertent slips of scrapers have resulted in cuts, scrapes, and injured knuckles, so use scrapers carefully when removing soil from these items.

1. Remove loose soil using shovels, scrapers, etc.

2. Through a combination of scrubbing using soap and water and/or steam cleaning or pressure washing, remove visible dirt/soil from the equipment being decontaminated.

> ***CAUTION***
> In Step 3, do not rinse PE, PVC, and associated tubing with solvents. The appropriate procedures should be defined within the project-specific planning documents. If they are not defined, contact the FOL for guidance. The solvent rinse described in Step 4 may be omitted if groundwater does not contain oil, grease, PAHs, PCBs, or other hard to remove organic materials.

3. Rinse the equipment with tap water, where applicable (steam cleaning and pressure washing incorporate rinsing as part of the process).

4. If the equipment has directly or indirectly contacted contaminated sample media and is known or suspected of being contaminated with oil, grease, PAHs, PCBs, or other hard to remove organic materials, rinse equipment with pesticide-grade isopropanol

5. To the extent possible, allow components to air dry.

6. If the decontaminated equipment is to be used immediately after decontamination, screen it with a calibrated photoionization detector (PID)/flame ionization detector (FID) to ensure that all contaminants and possible decontamination solvents (if they were used) have been adequately removed.

7. Wrap or cover equipment in clear plastic until it is time to be used.

SAFETY REMINDER

Even when equipment is disconnected from power sources, dangers such as the following may persist:

Falls - An auger flight standing on its end may fall and injure someone. Secure all loose articles to prevent heavy articles from falling onto people or equipment.

Burns - Steam cleaner water is heated to more than 212 °F and exhibits thermal energy that can cause burns. Prevent contact of skin with hot water or surfaces.

High water pressure - Pressure washer discharge can have 2,000 to 4,000 psi of water pressure. Water under this amount of pressure can rupture skin and other human tissues. Water at 4,000 psi exiting a 0° tip can be dangerous because of its relatively high cutting power. The exit velocity and cutting power of the water are reduced when exiting a 40° fan tip, but damage to soft tissues is still possible.

In general, follow the rules below to avoid injury, equipment damage, or incomplete decontamination:

1. Read the operating manual and follow the manufacturers' recommended safety practices before operating pressure washers and steam cleaners.

2. Never point the pressure washer or steam cleaner at another person or use to clean your boots or other parts of your body. Water lacerations and burns may appear to be minor at first but can be life threatening. Do not attempt to hold small parts in your hand while washing them with high-temperature or high-pressure water.

3. Always wear PPE as specified in the HASP such as:

   - Hard hat, safety glasses, splash shield, impermeable apron or splash suit, and hearing protection. Remember that excessive noise is a hazard when operating gas-powered engines and electrically driven pressure washers. PPE will be identified in your project specific planning documents.

4. Inspect each device before use. An inspection checklist will be provided in the project-specific planning documents. If it is a rented device, safety measures are typically provided by the vendor. In all cases, if you are not familiar with the operation of a pressure washer/steam cleaner, do not operate it until you obtain and thoroughly review operating instructions and recommended safety practices.

5. Do not modify equipment unless the manufacturer has approved the modifications.

7.2.3 Soil/Sediment Sampling Equipment

This section applies to soil sampling equipment including but not limited to hand augers, stainless steel trowels/spoons, bowls, dredges, scoops, split spoons, Macro Core samplers, etc.

1. Remove all loose soil from the equipment through manual means.
2. Through a combination of scrubbing using soap and water and/or steam cleaning or pressure washing, remove visible dirt/soil from the equipment.
3. Rinse the equipment with tap water.

> ***CAUTION***
> Do not rinse PE, PVC, and associated tubing with solvents. The appropriate procedures should be defined within the project-specific planning documents. If they are not defined, contact the FOL for guidance. The solvent rinse described in Step 4 may be omitted if groundwater does not contain oil, grease, PAHs, PCBs, or other hard to remove organic materials.

4. If the equipment is contaminated or suspected to be contaminated with oil, grease, PAHs, PCBs, or other hard to remove organic materials, rinse the equipment with pesticide-grade isopropanol.
5. Rinse the equipment with deionized water.
6. To the extent possible, allow components to air dry.
7. If the equipment is to be used immediately after decontamination, screen it with a calibrated PID/FID to ensure that all solvents (if they were used) and trace contaminants have been adequately removed.
8. After the equipment has dried, wrap it in aluminum foil for storage until use.

Dredges employed in sediment sampling are typically decontaminated as follows:

- Remove the sediment sample from the sampling device
- If sufficient associated surface water is available at the sampling site, place the dredge in the water and flush to remove visible sediment.
- Extract the dredge and wash it in soap and water per the project-specific planning documents.

> ***CAUTION***
> When handling dredges, the primary safety concern is trapping fingers or extremities in the larger dredge samplers within the jaws or pinch points of the mechanical jaws. Keep hands, fingers, and extremities away from these pinch and compression points. Either handle the device by the rope or preferably lock the jaws in place to control the potential for closing during maintenance and/or cleaning.

7.3 Contact Waste/Materials

During the course of field investigations, disposable/single-use equipment becomes contaminated. These items include tubing, trowels, PPE (gloves, overboots, splash suits, etc.), and broken sample containers.

With the exception of the broken glass, single-use articles should be cleaned (washed and rinsed) of visible materials and disposed as normal refuse. The exception to this rule is that extremely soiled materials that cannot be cleaned shall be containerized for disposal in accordance with applicable federal, state, and local regulations.

7.3.1 Investigation-Derived Wastes - Decontamination Wash Waters and Sediments

> ***NOTE***
> Requirements for waste storage may differ from one facility to the next. Facility-specific directions for waste storage areas will be provided in project-specific documents, or separate direction will be provided by the Project Manager.

1. Assume that all investigation-derived waste (IDW) generated from decontamination activities contains the hazardous chemicals associated with the site unless there are analytical or other data to the contrary. Waste solution volumes could vary from a few gallons to several hundred gallons in cases where large equipment required cleaning.

2. Where possible, use filtering systems to extend the use of water within a closed system wash unit to recycle water and to reduce possible waste amounts.

> ***NOTE***
> Containerized waste rinse solutions are best stored in 55-gallon drums (or equivalent containers) that can be sealed until ultimate disposal at an approved facility.

3. Label waste storage containers appropriately labeled (see Attachment A).

4. Ensure that the IDW storage area is configured to meet the following specifications to permit access to the containers and to conduct spill/leak monitoring, sampling, and extraction when the disposal route is determined:

   - Enclose areas accessible by the general public using construction fencing and signs.
   - Stored materials in 55-gallon drums on pallets with four (or fewer) drums per pallet.
   - Maintain the retaining bolt and label on the outside of storage containers where readily visible.
   - Provide at least 4 feet of room between each row of pallets to allow access to containers for sampling, drum removal, and spill response.
   - As directed in project-specific planning documents, maintain an IDW Inventory List and provide the list to the site Point of Contact at the termination of each shift.
   - Maintain spill response equipment at the IDW storage area in case it is required for immediate access.

- Where possible, use equipment for moving containers. Where not possible, obtain help to manipulate containers.

CAUTION

Each container of water can weigh up to 490 pounds. Each 55-gallon drum of wet soil can weigh more than 750 pounds. Fill drums and temporary containers to 80 percent capacity to minimize spill and handling difficulties. Use drum carts to move filled drums.

See safe lifting techniques provided in Section 4.4 of the Tetra Tech NUS, Inc. Health and Safety Guidance Manual.

When placing drums, keep your fingers out of pinch and smash points such as between the drums. In some cases such as well development and/or purge water, you can place the drums to be filled on the pallet and transport materials in smaller easier to handle containers.

7.4 Decontamination Evaluation

Upon decontamination of equipment, determine the effectiveness of the decontamination process in the following manner:

- Visual evaluation – A visual evaluation will be conducted to ensure the removal of particulate matter. This shall be done to ensure that the washing/rinsing process is working as intended.

- Instrument Screening – A properly calibrated PID/FID should be used to evaluate the presence of site contaminants and solvents used in the cleaning process. The air intake of the instrument shall be passed over the article to be evaluated. Avoid placing the instrument probe into residual waters. A PID/FID reading greater than the daily established background level requires a repeat of the decontamination process, followed by rescreening with the PID/FID. This sequence must be repeated until no instrument readings greater than the daily established background level are observed. It should be noted that the instrument scan is only viable if the contaminants are detectable within the instrument's capabilities.

NOTE

When required by project-specific planning documents, collection of rinsate blanks (see next step) shall be completed without exception unless approval to not collect these samples is obtained from the Project Manager.

- Collection of Rinsate Blanks – It is recommended that rinsate samples be collected to:

  - Evaluate the decontamination procedure representing different equipment applications (pumps versus drilling equipment) and different decontamination applications.

  - Single-use disposable equipment – The number of samples should represent different types of equipment as well as different lot numbers of single-use articles.

  - The collection and the frequency of collection of rinsate samples are as follows unless specified differently in the project-specific planning documents:

    - Per decontamination method
    - Per disposable article/batch number of disposable articles

NOTE

It is recommended that an initial rinsate sample be collected early in the project to ensure that the decontamination process is functioning properly and to avoid using a contaminated batch of single-use articles. It is recommended that a follow-up sample be collected later during the execution of the project to ensure that those conditions do not change.

Rinsate samples collection may be driven by types of and/or levels of contaminant. Difficult to remove contaminants, oils/greases, some PAHs/PCBs, etc. may also support the collection of additional rinsates due to the obvious challenges to the decontamination process. This is a field consideration to be determined by the FOL.

Attachment A
iDW Label

INVESTIGATION DERIVED WASTE

GENERATOR INFORMATION:

SITE _____ JOB NO. _____

LOCATION _____

DATE _____

DRUM# _____

CONTENTS _____

VOLUME _____

CONTACT _____

EMERGENCY PHONE NUMBER _____

APPENDIX E

DOD ELAP ACCREDITATION

LABORATORY ACCREDITATION BUREAU

Certificate # L2251

Scope of Accreditation For CompuChem, a Division of Liberty Analytical Corporation, Inc.

501 Madison Avenue
Cary, NC 27513
Mike Pearce
1-919-379-4005

In recognition of a successful assessment to ISO/IEC 17025:2005 and the requirements of the DoD Environmental Laboratory Accreditation Program (DoD ELAP) as detailed in the DoD Quality Systems Manual for Environmental Laboratories (DoD QSM v4.1) based on the National Environmental Laboratory Accreditation Conference Chapter 5 Quality Systems Standard (NELAC Voted Revision June 5, 2003), accreditation is granted to CompuChem to perform the following tests:

Accreditation granted through: April 23, 2013

Testing - Environmental

Non-Potable Water		
Technology	**Method**	**Analyte**
GC-MS	EPA 8260B	1,1,1,2-Tetrachloroethane
GC-MS	EPA 8260B	1,1,1-Trichloro-2,2,2-trifluoroethane
GC-MS	EPA 8260B	1,1,1-Trichloroethane
GC-MS	EPA 8260B	1,1,2,2-Tetrachloroethane
GC-MS	EPA 8260B	1,1,2-Trichloro-1,2,2-trifluoroethane
GC-MS	EPA 8260B	1,1,2-Trichloroethane
GC-MS	EPA 8260B	1,1-Dichloroethane
GC-MS	EPA 8260B	1,1-Dichloroethene
GC-MS	EPA 8260B	1,1-Dichloropropene
GC-MS	EPA 8260B	1,2,3-Trichlorobenzene
GC-MS	EPA 8260B	1,2,3-Trichloropropane
GC-MS	EPA 8260B	1,2,4-Trichlorobenzene
GC-MS	EPA 8260B	1,2,4-Trimethylbenzene
GC-MS	EPA 8260B	1,2-Dibromo-3-chloropropane
GC-MS	EPA 8260B	1,2-Dibromoethane
GC-MS	EPA 8260B	1,2-Dichlorobenzene
GC-MS	EPA 8260B	1,2-Dichloroethane
GC-MS	EPA 8260B	1,2-DICHLOROETHENE (TOTAL)
GC-MS	EPA 8260B	1,2-Dichloropropane

Non-Potable Water		
Technology	**Method**	**Analyte**
GC-MS	EPA 8260B	1,3,5-Trimethylbenzene
GC-MS	EPA 8260B	1,3-Dichloropropane
GC-MS	EPA 8260B	1,3-Dicholorobenzene
GC-MS	EPA 8260B	1,4-Dichlorobenzene
GC-MS	EPA 8260B	1,4-Dioxane
GC-MS	EPA 8260B	1-Chlorohexane
GC-MS	EPA 8260B	2,2'-Dichloropropane
GC-MS	EPA 8260B	2-Butanone (MEK)
GC-MS	EPA 8260B	2-Chloro-1,3-butadiene (Chloroprene)
GC-MS	EPA 8260B	2-Chloroethyl vinyl ether
GC-MS	EPA 8260B	2-Chlorotoluene
GC-MS	EPA 8260B	2-Hexanone
GC-MS	EPA 8260B	4-Chlorotoluene
GC-MS	EPA 8260B	4-Methyl-2-pentanone (MIBK)
GC-MS	EPA 8260B	Acetone
GC-MS	EPA 8260B	Acetonitrile
GC-MS	EPA 8260B	Acrolein
GC-MS	EPA 8260B	Acrylonitrile
GC-MS	EPA 8260B	Allyl chloride (3-chloro-1-propene)(3-Chloropropene)
GC-MS	EPA 8260B	Benzene
GC-MS	EPA 8260B	Bromobenzene
GC-MS	EPA 8260B	Bromochloromethane
GC-MS	EPA 8260B	Bromodichloromethane
GC-MS	EPA 8260B	Bromoform
GC-MS	EPA 8260B	Bromomethane
GC-MS	EPA 8260B	Carbon disulfide
GC-MS	EPA 8260B	Carbon tetrachloride
GC-MS	EPA 8260B	Chlorobenzene
GC-MS	EPA 8260B	Chloroethane
GC-MS	EPA 8260B	Chloroform
GC-MS	EPA 8260B	Chloromethane
GC-MS	EPA 8260B	cis-1,2-Dichloroethene
GC-MS	EPA 8260B	cis-1,3-Dichloropropene
GC-MS	EPA 8260B	Cyclohexane
GC-MS	EPA 8260B	Dibromochloromethane
GC-MS	EPA 8260B	Dibromomethane
GC-MS	EPA 8260B	Dichlorodifluoromethane
GC-MS	EPA 8260B	Ethylbenzene
GC-MS	EPA 8260B	Ethylmethacrylate

Non-Potable Water		
Technology	**Method**	**Analyte**
GC-MS	EPA 8260B	Hexachlorobutadiene
GC-MS	EPA 8260B	Iodomethane
GC-MS	EPA 8260B	Isobutanol
GC-MS	EPA 8260B	Isopropylbenzene
GC-MS	EPA 8260B	Isopropylether
GC-MS	EPA 8260B	Methacrylonitrile
GC-MS	EPA 8260B	Methyl acetate
GC-MS	EPA 8260B	Methyl iodide
GC-MS	EPA 8260B	Methyl methacrylate
GC-MS	EPA 8260B	Methylcyclohexane
GC-MS	EPA 8260B	Methylene chloride
GC-MS	EPA 8260B	Methyl-tert-butyl ether (MTBE)
GC-MS	EPA 8260B	Naphthalene
GC-MS	EPA 8260B	n-Butylbenzene
GC-MS	EPA 8260B	n-Propyl Benzene
GC-MS	EPA 8260B	Pentachloroethane
GC-MS	EPA 8260B	p-Isopropyl Toluene
GC-MS	EPA 8260B	Propionitrile
GC-MS	EPA 8260B	sec-Butyl benzene
GC-MS	EPA 8260B	Styrene
GC-MS	EPA 8260B	tert-Butyl benzene
GC-MS	EPA 8260B	Tetrachloroethene
GC-MS	EPA 8260B	Toluene
GC-MS	EPA 8260B	Total Xylenes
GC-MS	EPA 8260B	trans-1,2-Dichloroethene
GC-MS	EPA 8260B	trans-1,3-Dichloropropene
GC-MS	EPA 8260B	trans-1,4-Dichloro-2-butene
GC-MS	EPA 8260B	Trichloroethene
GC-MS	EPA 8260B	Trichlorofluoromethane
GC-MS	EPA 8260B	Vinyl acetate
GC-MS	EPA 8260B	Vinyl chloride
GC-MS	EPA 8260B	Xylene, Meta + Para
GC-MS	EPA 8260B	Xylene, Ortho
GC-MS	EPA 8270C/8270D	1,1’-Biphenyl
GC-MS	EPA 8270C/8270D	1,2,4,5-Tetrachlorobenzene
GC-MS	EPA 8270C/8270D	1,2,4-Trichlorobenzene
GC-MS	EPA 8270C/8270D	1,2-Dichlorobenzene
GC-MS	EPA 8270C/8270D	1,2-Diphenylhydrazine
GC-MS	EPA 8270C/8270D	1,3,5-Trinitrobenzene
GC-MS	EPA 8270C/8270D	1,3-Dichlorobenzene

Non-Potable Water		
Technology	**Method**	**Analyte**
GC-MS	EPA 8270C/8270D	1,3-Dinitrobenzene
GC-MS	EPA 8270C/8270D	1,4-Dichlorobenzene
GC-MS	EPA 8270C/8270D	1,4-Naphthoquinone
GC-MS	EPA 8270C/8270D	1-Methylnaphthalene
GC-MS	EPA 8270C/8270D	1-Naphthylamine
GC-MS	EPA 8270C/8270D	2,4,5-Trichlorophenol
GC-MS	EPA 8270C/8270D	2,4,6-Trichlorophenol
GC-MS	EPA 8270C/8270D	2,4-Dichlorophenol
GC-MS	EPA 8270C/8270D	2,4-Dimethylphenol
GC-MS	EPA 8270C/8270D	2,4-Dinitrophenol
GC-MS	EPA 8270C/8270D	2,4-Dinitrotoluene
GC-MS	EPA 8270C/8270D	2,6-Dichlorophenol
GC-MS	EPA 8270C/8270D	2,6-Dinitrotoluene
GC-MS	EPA 8270C/8270D	2-Acetylaminofluorene
GC-MS	EPA 8270C/8270D	2-Chloronaphthalene
GC-MS	EPA 8270C/8270D	2-Chlorophenol
GC-MS	EPA 8270C/8270D	2-Methylnaphthalene
GC-MS	EPA 8270C/8270D	2-Methylphenol
GC-MS	EPA 8270C/8270D	2-Naphthylamine
GC-MS	EPA 8270C/8270D	2-Nitroaniline
GC-MS	EPA 8270C/8270D	2-Nitrophenol
GC-MS	EPA 8270C/8270D	3,3'-Dichlorobenzidine
GC-MS	EPA 8270C/8270D	3,3'-Dimethylbenzidine
GC-MS	EPA 8270C/8270D	3-Methylcholanthrene
GC-MS	EPA 8270C/8270D	3-Methylphenol(1)
GC-MS	EPA 8270C/8270D	3-Nitroaniline
GC-MS	EPA 8270C/8270D	4,6-Dinitro-2-methylphenol
GC-MS	EPA 8270C/8270D	4-Aminobiphenyl
GC-MS	EPA 8270C/8270D	4-Bromophenyl phenyl ether
GC-MS	EPA 8270C/8270D	4-Chloro-3-methylphenol
GC-MS	EPA 8270C/8270D	4-Chloroaniline
GC-MS	EPA 8270C/8270D	4-Chlorophenyl phenyl ether
GC-MS	EPA 8270C/8270D	4-Methylphenol(1)
GC-MS	EPA 8270C/8270D	4-Nitroaniline
GC-MS	EPA 8270C/8270D	5-Nitro-o-toluidine
GC-MS	EPA 8270C/8270D	7,12-Dimethylbenz(a)-anthracene
GC-MS	EPA 8270C/8270D	Acenaphthene
GC-MS	EPA 8270C/8270D	Acenphthylene
GC-MS	EPA 8270C/8270D	Aniline
GC-MS	EPA 8270C/8270D	Anthracene

Non-Potable Water		
Technology	**Method**	**Analyte**
GC-MS	EPA 8270C/8270D	Benzo(a)anthracene
GC-MS	EPA 8270C/8270D	Benzo(a)pyrene
GC-MS	EPA 8270C/8270D	Benzo(b)fluoranthene
GC-MS	EPA 8270C/8270D	Benzo(g,h,i)perylene
GC-MS	EPA 8270C/8270D	Benzo(k)fluoranthene
GC-MS	EPA 8270C/8270D	bis(2-chloroethoxy)methane
GC-MS	EPA 8270C/8270D	bis(2-chloroethyl)ether
GC-MS	EPA 8270C/8270D	bis(2-chloroisopropyl)ether (2,2'-oxybis(1-Chloropropane))
GC-MS	EPA 8270C/8270D	bis(2-ethylhexyl)phthalate
GC-MS	EPA 8270C/8270D	Butyl benzyl phthalate
GC-MS	EPA 8270C/8270D	Carbazole
GC-MS	EPA 8270C/8270D	Chlorobenzilate
GC-MS	EPA 8270C/8270D	Chrysene
GC-MS	EPA 8270C/8270D	Diallate
GC-MS	EPA 8270C/8270D	Dibenzo(a,h)anthracene
GC-MS	EPA 8270C/8270D	Dibenzofuran
GC-MS	EPA 8270C/8270D	Diethyl phthalate
GC-MS	EPA 8270C/8270D	Dimethoate
GC-MS	EPA 8270C/8270D	Dimethyl phthalate
GC-MS	EPA 8270C/8270D	Di-n-butyl phthalate
GC-MS	EPA 8270C/8270D	Di-n-octyl phthalate
GC-MS	EPA 8270C/8270D	Diphenylamine(2)
GC-MS	EPA 8270C/8270D	Disulfoton
GC-MS	EPA 8270C/8270D	Ethyl methacrylate
GC-MS	EPA 8270C/8270D	Ethyl methane sulfonate
GC-MS	EPA 8270C/8270D	Fluoranthene
GC-MS	EPA 8270C/8270D	Fluorene
GC-MS	EPA 8270C/8270D	Hexachlorobenzene
GC-MS	EPA 8270C/8270D	Hexachlorobutadiene
GC-MS	EPA 8270C/8270D	Hexachlorocyclopentadiene
GC-MS	EPA 8270C/8270D	Hexachloroethane
GC-MS	EPA 8270C/8270D	Hexachloropropene
GC-MS	EPA 8270C/8270D	Indeno(1,2,3-cd)pyrene
GC-MS	EPA 8270C/8270D	Isodrin
GC-MS	EPA 8270C/8270D	Isophorone
GC-MS	EPA 8270C/8270D	Isosafrole
GC-MS	EPA 8270C/8270D	Methyl methane sulfonate
GC-MS	EPA 8270C/8270D	Methyl Parathion
GC-MS	EPA 8270C/8270D	Naphthalene

Non-Potable Water		
Technology	**Method**	**Analyte**
GC-MS	EPA 8270C/8270D	Nitrobenzene
GC-MS	EPA 8270C/8270D	n-Nitrosodiethylamine
GC-MS	EPA 8270C/8270D	n-Nitrosodimethylamine
GC-MS	EPA 8270C/8270D	n-Nitrosodi-n-butylamine
GC-MS	EPA 8270C/8270D	n-Nitrosodi-n-propylamine
GC-MS	EPA 8270C/8270D	n-Nitroso-diphenylamine(2)
GC-MS	EPA 8270C/8270D	n-Nitrosomethylethylamine
GC-MS	EPA 8270C/8270D	n-Nitrosomorpholine
GC-MS	EPA 8270C/8270D	n-Nitrosopiperidine
GC-MS	EPA 8270C/8270D	n-Nitrosopyrrolidine
GC-MS	EPA 8270C/8270D	o,o,o-Triethyl phosphorothioate
GC-MS	EPA 8270C/8270D	o-Toluidine
GC-MS	EPA 8270C/8270D	p-(Dimethylamino) azobenzene
GC-MS	EPA 8270C/8270D	Parathion
GC-MS	EPA 8270C/8270D	Pentachlorobenzene
GC-MS	EPA 8270C/8270D	Pentachloronitrobenzene
GC-MS	EPA 8270C/8270D	Pentachlorophenol
GC-MS	EPA 8270C/8270D	Pentachloroethane
GC-MS	EPA 8270C/8270D	Phenacetin
GC-MS	EPA 8270C/8270D	Phenanthrene
GC-MS	EPA 8270C/8270D	Phenol
GC-MS	EPA 8270C/8270D	Phorate
GC-MS	EPA 8270C/8270D	Pyrene
GC-MS	EPA 8270C/8270D	Pyridine
GC-MS	EPA 8270C/8270D	Safrole
GC-MS	EPA 8270C/8270D	Sulfotepp
GC-MS	EPA 8270C/8270D	Thionazin (Zinophos)
GC-ECD	EPA 8081A/8081B	Aldrin
GC-ECD	EPA 8081A/8081B	Alpha-BHC
GC-ECD	EPA 8081A/8081B	Alpha-chlordane
GC-ECD	EPA 8081A/8081B	Beta-BHC
GC-ECD	EPA 8081A/8081B	4,4'-DDD
GC-ECD	EPA 8081A/8081B	4,4'-DDE
GC-ECD	EPA 8081A/8081B	4,4'-DDT
GC-ECD	EPA 8081A/8081B	Delta-BHC
GC-ECD	EPA 8081A/8081B	Dieldrin
GC-ECD	EPA 8081A/8081B	Endosulfan I
GC-ECD	EPA 8081A/8081B	Endosulfan II
GC-ECD	EPA 8081A/8081B	Endosulfan sulfate
GC-ECD	EPA 8081A/8081B	Endrin

Non-Potable Water		
Technology	**Method**	**Analyte**
GC-ECD	EPA 8081A/8081B	Endrin aldehyde
GC-ECD	EPA 8081A/8081B	Endrin ketone
GC-ECD	EPA 8081A/8081B	Gamma-BHC (Lindane)
GC-ECD	EPA 8081A/8081B	Gamma-chlordane
GC-ECD	EPA 8081A/8081B	Heptachlor
GC-ECD	EPA 8081A/8081B	Heptachlor epoxide
GC-ECD	EPA 8081A/8081B	Methoxychlor
GC-ECD	EPA 8081A/8081B	Toxaphene
GC-ECD	EPA 8081A/8081B	Technical Chlordane
GC-ECD	EPA 8151A	Dalapon
GC-ECD	EPA 8151A	4-Nitrophenol
GC-ECD	EPA 8151A	Dicamba
GC-ECD	EPA 8151A	Dichloroprop
GC-ECD	EPA 8151A	2,4-DB
GC-ECD	EPA 8151A	2,4-D
GC-ECD	EPA 8151A	2,4,5-T
GC-ECD	EPA 8151A	2,4,5-TP (Silvex)
GC-ECD	EPA 8151A	Dinoseb
GC-ECD	EPA 8151A	Pentachlorophenol
ICP-AES	EPA 6010B/6010C	Aluminum
ICP-AES	EPA 6010B/6010C	Antimony
ICP-AES	EPA 6010B/6010C	Arsenic
ICP-AES	EPA 6010B/6010C	Barium
ICP-AES	EPA 6010B/6010C	Beryllium
ICP-AES	EPA 6010B/6010C	Cadmium
ICP-AES	EPA 6010B/6010C	Calcium
ICP-AES	EPA 6010B/6010C	Chromium
ICP-AES	EPA 6010B/6010C	Cobalt
ICP-AES	EPA 6010B/6010C	Copper
ICP-AES	EPA 6010B/6010C	Iron
ICP-AES	EPA 6010B/6010C	Lead
ICP-AES	EPA 6010B/6010C	Magnesium
ICP-AES	EPA 6010B/6010C	Manganese
CVVA	EPA 7470A	Mercury
ICP-AES	EPA 6010B/6010C	Molybdenum
ICP-AES	EPA 6010B/6010C	Nickel
ICP-AES	EPA 6010B/6010C	Potassium
ICP-AES	EPA 6010B/6010C	Selenium
ICP-AES	EPA 6010B/6010C	Silver
ICP-AES	EPA 6010B/6010C	Sodium

Non-Potable Water		
Technology	**Method**	**Analyte**
ICP-AES	EPA 6010B/6010C	Thallium
ICP-AES	EPA 6010B/6010C	Tin
ICP-AES	EPA 6010B/6010C	Titanium
ICP-AES	EPA 6010B/6010C	Vanadium
ICP-AES	EPA 6010B/6010C	Zinc
ICP-MS	EPA 6020/6020A	Antimony
ICP-MS	EPA 6020/6020A	Arsenic
ICP-MS	EPA 6020/6020A	Barium
ICP-MS	EPA 6020/6020A	Beryllium
ICP-MS	EPA 6020/6020A	Cadmium
ICP-MS	EPA 6020/6020A	Chromium
ICP-MS	EPA 6020/6020A	Cobalt
ICP-MS	EPA 6020/6020A	Copper
ICP-MS	EPA 6020/6020A	Lead
ICP-MS	EPA 6020/6020A	Manganese
ICP-MS	EPA 6020/6020A	Nickel
ICP-MS	EPA 6020/6020A	Selenium
ICP-MS	EPA 6020/6020A	Silver
ICP-MS	EPA 6020/6020A	Thallium
ICP-MS	EPA 6020/6020A	Vanadium
ICP-MS	EPA 6020/6020A	Zinc
UV-VIS	EPA 9012A	Cyanide
TITR	SM 4500 S2F	Sulfide
IC	EPA 300.0	Chloride
IC	EPA 300.0	Bromide
IC	EPA 300.0	Fluoride
IC	EPA 300.0	Sulfate
IC	EPA 300.0	Nitrate
IC	EPA 300.0	Nitrite
IC	EPA 300.0	Orthophosphate
HPLC	EPA 8330/8330A/8330B	HMX
HPLC	EPA 8330/8330A/8330B	RDX
HPLC	EPA 8330/8330A/8330B	1,3,5-Trinitrobenzene
HPLC	EPA 8330/8330A/8330B	1,3-Dinitrobenzene
HPLC	EPA 8330/8330A/8330B	Nitrobenzene
HPLC	EPA 8330/8330A/8330B	Tetryl
HPLC	EPA 8330/8330A/8330B	2,4,6-Trinitrotoluene
HPLC	EPA 8330/8330A/8330B	4-Amino-2,6-dinitrotoluene
HPLC	EPA 8330/8330A/8330B	2-Amino-4,6-dinitrotoluene
HPLC	EPA 8330/8330A/8330B	2,6-Dinitrotoluene

Non-Potable Water

Technology	Method	Analyte
HPLC	EPA 8330/8330A/8330B	2,4-Dinitrotoluene
HPLC	EPA 8330/8330A/8330B	2-Nitrotoluene
HPLC	EPA 8330/8330A/8330B	4-Nitrotoluene
HPLC	EPA 8330/8330A/8330B	3-Nitrotoluene
UV-VIS	EPA 9066	Phenolics
GC-FID	EPA RSK-175	Methane
GC-FID	EPA RSK-175	Ethane
GC-FID	EPA RSK-175	Ethene
GC-FID	EPA RSK-175	Propane
GC/FID	EPA 8015B/8015C	GRO
GC/FID	EPA 8015B/8015C	DRO
TOC	EPA 9060A	Total Organic Carbon
TOC	SM 5310B	Total Organic Carbon
TITR	EPA 310.2	Alkalinity
Pensky-Martens Closed-Cup	EPA 1010	Ignitability
ISE	EPA 9040 B	Corrosivity
ISE	SM 4500H+B	pH
Gravimetric	SM 2450 B	Total Solids
Gravimetric	SM 2540 C	Total Dissolved Solids
Gravimetric	SM 2450 D	Total Suspended Solids
IC	EPA 314.0	Perchlorate
UV-VIS	SM 3500 Cr-B	Hexavalent Chromium
UV-VIS	EPA 7196A	Hexavalent Chromium
UV-VIS	SM 3500 Fe-B	Ferrous Iron
Preparation	**Method**	**Type**
Separatory Funnel Liquid-Liquid Extraction	EPA 3510C	Semivolatile and Nonvolatile Organics
Liquid Extraction	EPA 3520C	Continuous Liquid-liquid
Purge and Trap	EPA 5030B	Volatile Organic Compounds
Acid Digestion (Aqueous)	EPA 3010A	Inorganics
Acid Digestion (Aqueous)	EPA 3005A	Total Recoverable or Dissolved Metals
Distillation and UV-VIS	EPA 9010B	Total and Amenable Cyanide
Acid Digestion (Aqueous)	EPA 3015	Microwave Assisted

Solid and Chemical Materials

Technology	Method	Analyte
GC-MS	EPA 8260B	1,1,1,2-Tetrachloroethane
GC-MS	EPA 8260B	1,1,1-Trichloro-2,2,2-trifluoroethane
GC-MS	EPA 8260B	1,1,1-Trichloroethane

Solid and Chemical Materials		
Technology	**Method**	**Analyte**
GC-MS	EPA 8260B	1,1,2,2-Tetrachloroethane
GC-MS	EPA 8260B	1,1,2-Trichloro-1,2,2-trifluoroethane
GC-MS	EPA 8260B	1,1,2-Trichloroethane
GC-MS	EPA 8260B	1,1-Dichloroethane
GC-MS	EPA 8260B	1,1-Dichloroethene
GC-MS	EPA 8260B	1,1-Dichloropropene
GC-MS	EPA 8260B	1,2,3-Trichlorobenzene
GC-MS	EPA 8260B	1,2,3-Trichloropropane
GC-MS	EPA 8260B	1,2,4-Trichlorobenzene
GC-MS	EPA 8260B	1,2,4-Trimethylbenzene
GC-MS	EPA 8260B	1,2-Dibromo-3-chloropropane
GC-MS	EPA 8260B	1,2-Dibromoethane
GC-MS	EPA 8260B	1,2-Dichlorobenzene
GC-MS	EPA 8260B	1,2-Dichloroethane
GC-MS	EPA 8260B	1,2-DICHLOROETHENE (TOTAL)
GC-MS	EPA 8260B	1,2-Dichloropropane
GC-MS	EPA 8260B	1,3,5-Trimethylbenzene
GC-MS	EPA 8260B	1,3-Dichloropropane
GC-MS	EPA 8260B	1,3-Dicholorobenzene
GC-MS	EPA 8260B	1,4-Dichlorobenzene
GC-MS	EPA 8260B	1,4-Dioxane
GC-MS	EPA 8260B	1-Chlorohexane
GC-MS	EPA 8260B	2,2'-Dichloropropane
GC-MS	EPA 8260B	2-Butanone (MEK)
GC-MS	EPA 8260B	2-Chloro-1,3-butadiene (Chloroprene)
GC-MS	EPA 8260B	2-Chloroethyl vinyl ether
GC-MS	EPA 8260B	2-Chlorotoluene
GC-MS	EPA 8260B	2-Hexanone
GC-MS	EPA 8260B	4-Chlorotoluene
GC-MS	EPA 8260B	4-Methyl-2-pentanone (MIBK)
GC-MS	EPA 8260B	Acetone
GC-MS	EPA 8260B	Acetonitrile
GC-MS	EPA 8260B	Acrolein
GC-MS	EPA 8260B	Acrylonitrile
GC-MS	EPA 8260B	Allyl chloride (3-chloro-1-propene) (3-Chloropropene)
GC-MS	EPA 8260B	Benzene
GC-MS	EPA 8260B	Bromobenzene
GC-MS	EPA 8260B	Bromochloromethane
GC-MS	EPA 8260B	Bromodichloromethane

Solid and Chemical Materials		
Technology	**Method**	**Analyte**
GC-MS	EPA 8260B	Bromoform
GC-MS	EPA 8260B	Bromomethane
GC-MS	EPA 8260B	Carbon disulfide
GC-MS	EPA 8260B	Carbon tetrachloride
GC-MS	EPA 8260B	Chlorobenzene
GC-MS	EPA 8260B	Chloroethane
GC-MS	EPA 8260B	Chloroform
GC-MS	EPA 8260B	Chloromethane
GC-MS	EPA 8260B	cis-1,2-Dichloroethene
GC-MS	EPA 8260B	cis-1,3-Dichloropropene
GC-MS	EPA 8260B	Cyclohexane
GC-MS	EPA 8260B	Dibromochloromethane
GC-MS	EPA 8260B	Dibromomethane
GC-MS	EPA 8260B	Dichlorodifluoromethane
GC-MS	EPA 8260B	Ethylbenzene
GC-MS	EPA 8260B	Ethylmethacrylate
GC-MS	EPA 8260B	Hexachlorobutadiene
GC-MS	EPA 8260B	Iodomethane
GC-MS	EPA 8260B	Isobutanol
GC-MS	EPA 8260B	Isopropylbenzene
GC-MS	EPA 8260B	Isopropylether
GC-MS	EPA 8260B	Methacrylonitrile
GC-MS	EPA 8260B	Methyl acetate
GC-MS	EPA 8260B	Methyl methacrylate
GC-MS	EPA 8260B	Methylcyclohexane
GC-MS	EPA 8260B	Methylene chloride
GC-MS	EPA 8260B	Methyl-tert-butyl ether (MTBE)
GC-MS	EPA 8260B	Naphthalene
GC-MS	EPA 8260B	n-Butylbenzene
GC-MS	EPA 8260B	n-Propyl Benzene
GC-MS	EPA 8260B	Pentachloroethane
GC-MS	EPA 8260B	p-Isopropyl Toluene
GC-MS	EPA 8260B	Propionitrile
GC-MS	EPA 8260B	sec-Butyl benzene
GC-MS	EPA 8260B	Styrene
GC-MS	EPA 8260B	tert-Butyl benzene
GC-MS	EPA 8260B	Tetrachloroethene
GC-MS	EPA 8260B	Toluene
GC-MS	EPA 8260B	Total Xylenes
GC-MS	EPA 8260B	trans-1,2-Dichloroethene

Solid and Chemical Materials		
Technology	**Method**	**Analyte**
GC-MS	EPA 8260B	trans-1,3-Dichloropropene
GC-MS	EPA 8260B	trans-1,4-Dichloro-2-butene
GC-MS	EPA 8260B	Trichloroethene
GC-MS	EPA 8260B	Trichlorofluoromethane
GC-MS	EPA 8260B	Vinyl acetate
GC-MS	EPA 8260B	Vinyl chloride
GC-MS	EPA 8260B	Xylene, Meta + Para
GC-MS	EPA 8260B	Xylene, Ortho
GC-MS	EPA 8270C/8270D	1,1’-Biphenyl
GC-MS	EPA 8270C/8270D	1,2,4,5-Tetrachlorobenzene
GC-MS	EPA 8270C/8270D	1,2,4-Trichlorobenzene
GC-MS	EPA 8270C/8270D	1,2-Dichlorobenzene
GC-MS	EPA 8270C/8270D	1,2-Diphenylhydrazine
GC-MS	EPA 8270C/8270D	1,3,5-Trinitrobenzene
GC-MS	EPA 8270C/8270D	1,3-Dichlorobenzene
GC-MS	EPA 8270C/8270D	1,3-Dinitrobenzene
GC-MS	EPA 8270C/8270D	1,4-Dichlorobenzene
GC-MS	EPA 8270C/8270D	1-Methylnaphthalene
GC-MS	EPA 8270C/8270D	1-Naphthylamine
GC-MS	EPA 8270C/8270D	2,3,4,6-Tetrachlorophenol
GC-MS	EPA 8270C/8270D	2,4,5-Trichlorophenol
GC-MS	EPA 8270C/8270D	2,4,6-Trichlorophenol
GC-MS	EPA 8270C/8270D	2,4-Dichlorophenol
GC-MS	EPA 8270C/8270D	2,4-Dimethylphenol
GC-MS	EPA 8270C/8270D	2,4-Dinitrophenol
GC-MS	EPA 8270C/8270D	2,4-Dinitrotoluene
GC-MS	EPA 8270C/8270D	2,6-Dichlorophenol
GC-MS	EPA 8270C/8270D	2,6-Dinitrotoluene
GC-MS	EPA 8270C/8270D	2-Acetylaminofluorene
GC-MS	EPA 8270C/8270D	2-Chloronaphthalene
GC-MS	EPA 8270C/8270D	2-Chlorophenol
GC-MS	EPA 8270C/8270D	2-Methylnaphthalene
GC-MS	EPA 8270C/8270D	2-Methylphenol
GC-MS	EPA 8270C/8270D	2-Naphthylamine
GC-MS	EPA 8270C/8270D	2-Nitroaniline
GC-MS	EPA 8270C/8270D	2-Nitrophenol
GC-MS	EPA 8270C/8270D	2-Picoline
GC-MS	EPA 8270C/8270D	3,3'-Dichlorobenzidine
GC-MS	EPA 8270C/8270D	3,3'-Dimethylbenzidine
GC-MS	EPA 8270C/8270D	3-Methylcholanthrene

Solid and Chemical Materials		
Technology	**Method**	**Analyte**
GC-MS	EPA 8270C/8270D	3-Methylphenol(1)
GC-MS	EPA 8270C/8270D	3-Nitroaniline
GC-MS	EPA 8270C/8270D	4,6-Dinitro-2-methylphenol
GC-MS	EPA 8270C/8270D	4-Aminobiphenyl
GC-MS	EPA 8270C/8270D	4-Bromophenyl phenyl ether
GC-MS	EPA 8270C/8270D	4-Chloro-3-methylphenol
GC-MS	EPA 8270C/8270D	4-Chloroaniline
GC-MS	EPA 8270C/8270D	4-Chlorophenyl phenyl ether
GC-MS	EPA 8270C/8270D	4-Methylphenol(1)
GC-MS	EPA 8270C/8270D	4-Nitroaniline
GC-MS	EPA 8270C/8270D	4-Nitrophenol
GC-MS	EPA 8270C/8270D	4-Nitroquinoline-1-oxide
GC-MS	EPA 8270C/8270D	5-Nitro-o-toluidine
GC-MS	EPA 8270C/8270D	7,12-Dimethylbenz(a)-anthracene
GC-MS	EPA 8270C/8270D	Acenaphthene
GC-MS	EPA 8270C/8270D	Acenphthylene
GC-MS	EPA 8270C/8270D	Aniline
GC-MS	EPA 8270C/8270D	Anthracene
GC-MS	EPA 8270C/8270D	Aramite
GC-MS	EPA 8270C/8270D	Benzo(a)anthracene
GC-MS	EPA 8270C/8270D	Benzo(a)pyrene
GC-MS	EPA 8270C/8270D	Benzo(b)fluoranthene
GC-MS	EPA 8270C/8270D	Benzo(g,h,i)perylene
GC-MS	EPA 8270C/8270D	Benzo(k)fluoranthene
GC-MS	EPA 8270C/8270D	Benzoic Acid
GC-MS	EPA 8270C/8270D	Benzyl alcohol
GC-MS	EPA 8270C/8270D	bis(2-chloroethoxy)methane
GC-MS	EPA 8270C/8270D	bis(2-chloroethyl)ether
GC-MS	EPA 8270C/8270D	bis(2-chloroisopropyl)ether (2,2'-oxybis(1-Chloropropane))
GC-MS	EPA 8270C/8270D	bis(2-ethylhexyl)phthalate
GC-MS	EPA 8270C/8270D	Butyl benzyl phthalate
GC-MS	EPA 8270C/8270D	Carbazole
GC-MS	EPA 8270C/8270D	Chlorobenzilate
GC-MS	EPA 8270C/8270D	Chrysene
GC-MS	EPA 8270C/8270D	Diallate
GC-MS	EPA 8270C/8270D	Dibenzo(a,h)anthracene
GC-MS	EPA 8270C/8270D	Dibenzofuran
GC-MS	EPA 8270C/8270D	Diethyl phthalate
GC-MS	EPA 8270C/8270D	Dimethoate

Solid and Chemical Materials		
Technology	**Method**	**Analyte**
GC-MS	EPA 8270C/8270D	Dimethyl phthalate
GC-MS	EPA 8270C/8270D	Di-n-butyl phthalate
GC-MS	EPA 8270C/8270D	Di-n-octyl phthalate
GC-MS	EPA 8270C/8270D	Diphenylamine(2)
GC-MS	EPA 8270C/8270D	Disulfoton
GC-MS	EPA 8270C/8270D	Ethyl methacrylate
GC-MS	EPA 8270C/8270D	Ethyl methane sulfonate
GC-MS	EPA 8270C/8270D	Fluoranthene
GC-MS	EPA 8270C/8270D	Fluorene
GC-MS	EPA 8270C/8270D	Hexachlorobenzene
GC-MS	EPA 8270C/8270D	Hexachlorobutadiene
GC-MS	EPA 8270C/8270D	Hexachlorocyclopentadiene
GC-MS	EPA 8270C/8270D	Hexachloroethane
GC-MS	EPA 8270C/8270D	Hexachloropropene
GC-MS	EPA 8270C/8270D	Indeno(1,2,3-cd)pyrene
GC-MS	EPA 8270C/8270D	Isodrin
GC-MS	EPA 8270C/8270D	Isophorone
GC-MS	EPA 8270C/8270D	Isosafrole
GC-MS	EPA 8270C/8270D	Methyl methane sulfonate
GC-MS	EPA 8270C/8270D	Methyl Parathion
GC-MS	EPA 8270C/8270D	Naphthalene
GC-MS	EPA 8270C/8270D	Nitrobenzene
GC-MS	EPA 8270C/8270D	n-Nitrosodiethylamine
GC-MS	EPA 8270C/8270D	n-Nitrosodimethylamine
GC-MS	EPA 8270C/8270D	n-Nitrosodi-n-butylamine
GC-MS	EPA 8270C/8270D	n-Nitrosodi-n-propylamine
GC-MS	EPA 8270C/8270D	n-Nitroso-diphenylamine(2)
GC-MS	EPA 8270C/8270D	n-Nitrosomethylethylamine
GC-MS	EPA 8270C/8270D	n-Nitrosomorpholine
GC-MS	EPA 8270C/8270D	n-Nitrosopiperidine
GC-MS	EPA 8270C/8270D	n-Nitrosopyrrolidine
GC-MS	EPA 8270C/8270D	o,o,o-Triethyl phosphorothioate
GC-MS	EPA 8270C/8270D	o-Toluidine
GC-MS	EPA 8270C/8270D	p-(Dimethylamino) azobenzene
GC-MS	EPA 8270C/8270D	Parathion
GC-MS	EPA 8270C/8270D	Pentachlorobenzene
GC-MS	EPA 8270C/8270D	Pentachloronitrobenzene
GC-MS	EPA 8270C/8270D	Pentachlorophenol
GC-MS	EPA 8270C/8270D	Pentachloroethane
GC-MS	EPA 8270C/8270D	Phenacetin

Solid and Chemical Materials		
Technology	**Method**	**Analyte**
GC-MS	EPA 8270C/8270D	Phenanthrene
GC-MS	EPA 8270C/8270D	Phenol
GC-MS	EPA 8270C/8270D	Phorate
GC-MS	EPA 8270C/8270D	Pronamide
GC-MS	EPA 8270C/8270D	Pyrene
GC-MS	EPA 8270C/8270D	Pyridine
GC-MS	EPA 8270C/8270D	Safrole
GC-MS	EPA 8270C/8270D	Sulfotepp
GC-MS	EPA 8270C/8270D	Thionazin (Zinophos)
GC-ECD	EPA 8081A/8081B	Aldrin
GC-ECD	EPA 8081A/8081B	Alpha-BHC
GC-ECD	EPA 8081A/8081B	Alpha-chlordane
GC-ECD	EPA 8081A/8081B	Beta-BHC
GC-ECD	EPA 8081A/8081B	4,4'-DDD
GC-ECD	EPA 8081A/8081B	4,4'-DDE
GC-ECD	EPA 8081A/8081B	4,4'-DDT
GC-ECD	EPA 8081A/8081B	Delta-BHC
GC-ECD	EPA 8081A/8081B	Dieldrin
GC-ECD	EPA 8081A/8081B	Endosulfan I
GC-ECD	EPA 8081A/8081B	Endosulfan II
GC-ECD	EPA 8081A/8081B	Endosulfan sulfate
GC-ECD	EPA 8081A/8081B	Endrin
GC-ECD	EPA 8081A/8081B	Endrin aldehyde
GC-ECD	EPA 8081A/8081B	Endrin ketone
GC-ECD	EPA 8081A/8081B	Gamma-BHC (Lindane)
GC-ECD	EPA 8081A/8081B	Gamma-chlordane
GC-ECD	EPA 8081A/8081B	Heptachlor
GC-ECD	EPA 8081A/8081B	Heptachlor epoxide
GC-ECD	EPA 8081A/8081B	Methoxychlor
GC-ECD	EPA 8081A/8081B	Toxaphene
GC-ECD	EPA 8081A/8081B	Technical Chlordane
GC-ECD	EPA 8082/8082A	Aroclor-1016
GC-ECD	EPA 8082/8082A	Aroclor-1221
GC-ECD	EPA 8082/8082A	Aroclor-1232
GC-ECD	EPA 8082/8082A	Aroclor-1242
GC-ECD	EPA 8082/8082A	Aroclor-1248
GC-ECD	EPA 8082/8082A	Aroclor-1254
GC-ECD	EPA 8082/8082A	Aroclor-1260
GC-ECD	EPA 8082/8082A	Aroclor-1262
ICP-AES	EPA 6010B/6010C	Aluminum

Solid and Chemical Materials		
Technology	**Method**	**Analyte**
ICP-AES	EPA 6010B/6010C	Antimony
ICP-AES	EPA 6010B/6010C	Arsenic
ICP-AES	EPA 6010B/6010C	Barium
ICP-AES	EPA 6010B/6010C	Beryllium
ICP-AES	EPA 6010B/6010C	Cadmium
ICP-AES	EPA 6010B/6010C	Calcium
ICP-AES	EPA 6010B/6010C	Chromium
ICP-AES	EPA 6010B/6010C	Cobalt
ICP-AES	EPA 6010B/6010C	Copper
ICP-AES	EPA 6010B/6010C	Iron
ICP-AES	EPA 6010B/6010C	Lead
ICP-AES	EPA 6010B/6010C	Magnesium
ICP-AES	EPA 6010B/6010C	Manganese
ICP-AES	EPA 6010B/6010C	Molybdenum
CVVA	EPA 7471A/7471B	Mercury
ICP-AES	EPA 6010B/6010C	Nickel
ICP-AES	EPA 6010B/6010C	Potassium
ICP-AES	EPA 6010B/6010C	Selenium
ICP-AES	EPA 6010B/6010C	Silver
ICP-AES	EPA 6010B/6010C	Sodium
ICP-AES	EPA 6010B/6010C	Thallium
ICP-AES	EPA 6010B/6010C	Titanium
ICP-AES	EPA 6010B/6010C	Vanadium
ICP-AES	EPA 6010B/6010C	Zinc
ICP-AES	EPA 6010B/6010C	Tin
ICP-MS	EPA 6020/6020A	Antimony
ICP-MS	EPA 6020/6020A	Arsenic
ICP-MS	EPA 6020/6020A	Barium
ICP-MS	EPA 6020/6020A	Beryllium
ICP-MS	EPA 6020/6020A	Cadmium
ICP-MS	EPA 6020/6020A	Chromium
ICP-MS	EPA 6020/6020A	Cobalt
ICP-MS	EPA 6020/6020A	Copper
ICP-MS	EPA 6020/6020A	Lead
ICP-MS	EPA 6020/6020A	Manganese
ICP-MS	EPA 6020/6020A	Nickel
ICP-MS	EPA 6020/6020A	Selenium
ICP-MS	EPA 6020/6020A	Silver
ICP-MS	EPA 6020/6020A	Thallium
ICP-MS	EPA 6020/6020A	Vanadium

Solid and Chemical Materials

Technology	Method	Analyte
ICP-MS	EPA 6020/6020A	Zinc
UV-VIS	EPA 9012A	Cyanide
GC/FID	EPA 8015B/8015C	GRO
TOC	EPA 9060A Mod	Total Organic Carbon
Pensky-Martens Closed-Cup	EPA 1010	Ignitability
ISE	EPA 9045C/9045D	pH
UV-VIS	EPA 7196A	Hexavalent Chromium
Preparation	**Method**	**Type**
Ultrasonic Extraction	EPA 3550B/3550C	Semivolatile and Nonvolatile Organics
Waste Dilution	EPA 3580A	Semivolatile and Nonvolatile Organics
Purge and Trap	EPA 5035/5035A	Volatile Organic Compounds
Acid Digestion	EPA 3050B	Hotblock Assisted
TCLP Extraction	EPA 1311	Toxicity Characteristic Leaching Procedure
SPLP Extraction	EPA 1312	Synthetic Precipitation Leaching Procedure
Extraction	EPA 3540C	Soxhlet
Extraction	EPA 3541	Automated Soxhlet Extraction
Leachate Generation	ASTM D3987-85	Leachate Generation with Water from Solid Waste Samples
Alkaline Digestion	EPA 3060A	Hexavalent Chromium
Distillation and UV-VIS	EPA 9010B	Total and Amenable Cyanide
Titrimetric and Manual Spectrophotometric	EPA 9014	Cyanide
Titrimetric	EPA 9034	Acid-Soluble and Acid-Insoluble Sulfides

Biological Tissue

Technology	Method	Analyte
GC-MS	EPA 8260B	1,1,1,2-Tetrachloroethane
GC-MS	EPA 8260B	1,1,1-Trichloro-1,2,2-trifluoroethane
GC-MS	EPA 8260B	1,1,1-Trichloroethane
GC-MS	EPA 8260B	1,1,2,2-Tetrachloroethane
GC-MS	EPA 8260B	1,1,2-Trichloro-1,2,2-trifluoroethane
GC-MS	EPA 8260B	1,1,2-Trichloroethane
GC-MS	EPA 8260B	1,1-Dichloroethane
GC-MS	EPA 8260B	1,1-Dichloroethene
GC-MS	EPA 8260B	1,1-Dichloropropene
GC-MS	EPA 8260B	1,2,3-Trichlorobenzene
GC-MS	EPA 8260B	1,2,3-Trichloropropane
GC-MS	EPA 8260B	1,2,4-Trichlorobenzene
GC-MS	EPA 8260B	1,2,4-Trimethylbenzene
GC-MS	EPA 8260B	1,2-Dibromo-3-chloropropane

Biological Tissue		
Technology	**Method**	**Analyte**
GC-MS	EPA 8260B	1,2-Dibromoethane
GC-MS	EPA 8260B	1,2-Dichlorobenzene
GC-MS	EPA 8260B	1,2-Dichloroethane
GC-MS	EPA 8260B	1,2-DICHLOROETHENE (TOTAL)
GC-MS	EPA 8260B	1,2-Dichloropropane
GC-MS	EPA 8260B	1,3,5-Trimethylbenzene
GC-MS	EPA 8260B	1,3-Dichloropropane
GC-MS	EPA 8260B	1,3-Dicholorobenzene
GC-MS	EPA 8260B	1,4-Dichlorobenzene
GC-MS	EPA 8260B	1,4-Dioxane
GC-MS	EPA 8260B	1-Chlorohexane
GC-MS	EPA 8260B	2,2'-Dichloropropane
GC-MS	EPA 8260B	2-Butanone (MEK)
GC-MS	EPA 8260B	2-Chloro-1,3-butadiene (Chloroprene)
GC-MS	EPA 8260B	2-Chloroethyl vinyl ether
GC-MS	EPA 8260B	2-Chlorotoluene
GC-MS	EPA 8260B	2-Hexanone
GC-MS	EPA 8260B	4-Chlorotoluene
GC-MS	EPA 8260B	4-Methyl-2-pentanone (MIBK)
GC-MS	EPA 8260B	Acetone
GC-MS	EPA 8260B	Acetonitrile
GC-MS	EPA 8260B	Acrolein
GC-MS	EPA 8260B	Acrylonitrile
GC-MS	EPA 8260B	Allyl chloride (3-chloro-1-propene) (3-Chloropropene)
GC-MS	EPA 8260B	Benzene
GC-MS	EPA 8260B	Bromobenzene
GC-MS	EPA 8260B	Bromochloromethane
GC-MS	EPA 8260B	Bromodichloromethane
GC-MS	EPA 8260B	Bromoform
GC-MS	EPA 8260B	Bromomethane
GC-MS	EPA 8260B	Carbon disulfide
GC-MS	EPA 8260B	Carbon tetrachloride
GC-MS	EPA 8260B	Chlorobenzene
GC-MS	EPA 8260B	Chloroethane
GC-MS	EPA 8260B	Chloroform
GC-MS	EPA 8260B	Chloromethane
GC-MS	EPA 8260B	cis-1,2-Dichloroethene
GC-MS	EPA 8260B	cis-1,3-Dichloropropene
GC-MS	EPA 8260B	Cyclohexane

Biological Tissue		
Technology	**Method**	**Analyte**
GC-MS	EPA 8260B	Dibromochloromethane
GC-MS	EPA 8260B	Dibromomethane
GC-MS	EPA 8260B	Dichlorodifluoromethane
GC-MS	EPA 8260B	Ethylbenzene
GC-MS	EPA 8260B	Ethylmethacrylate
GC-MS	EPA 8260B	Hexachlorobutadiene
GC-MS	EPA 8260B	Iodomethane
GC-MS	EPA 8260B	Isobutanol
GC-MS	EPA 8260B	Isopropylbenzene
GC-MS	EPA 8260B	Isopropylether
GC-MS	EPA 8260B	Methacrylonitrile
GC-MS	EPA 8260B	Methyl acetate
GC-MS	EPA 8260B	Methyl methacrylate
GC-MS	EPA 8260B	Methylcyclohexane
GC-MS	EPA 8260B	Methylene chloride
GC-MS	EPA 8260B	Methyl-tert-butyl ether (MTBE)
GC-MS	EPA 8260B	Naphthalene
GC-MS	EPA 8260B	n-Butylbenzene
GC-MS	EPA 8260B	n-Propyl Benzene
GC-MS	EPA 8260B	Pentachloroethane
GC-MS	EPA 8260B	p-Isopropyl Toluene
GC-MS	EPA 8260B	Propionitrile
GC-MS	EPA 8260B	sec-Butyl benzene
GC-MS	EPA 8260B	Styrene
GC-MS	EPA 8260B	tert-Butyl benzene
GC-MS	EPA 8260B	Tetrachloroethene
GC-MS	EPA 8260B	Toluene
GC-MS	EPA 8260B	Total Xylenes
GC-MS	EPA 8260B	trans-1,2-Dichloroethene
GC-MS	EPA 8260B	trans-1,3-Dichloropropene
GC-MS	EPA 8260B	trans-1,4-Dichloro-2-butene
GC-MS	EPA 8260B	Trichloroethene
GC-MS	EPA 8260B	Trichlorofluoromethane
GC-MS	EPA 8260B	Vinyl acetate
GC-MS	EPA 8260B	Vinyl chloride
GC-MS	EPA 8260B	Xylene, Meta + Para
GC-MS	EPA 8260B	Xylene, Ortho
GC-MS	EPA 8270C/8270D	1,1’-Biphenyl
GC-MS	EPA 8270C/8270D	1,2,4,5-Tetrachlorobenzene
GC-MS	EPA 8270C/8270D	1,2,4-Trichlorobenzene

Biological Tissue		
Technology	**Method**	**Analyte**
GC-MS	EPA 8270C/8270D	1,2-Dichlorobenzene
GC-MS	EPA 8270C/8270D	1,2-Diphenylhydrazine
GC-MS	EPA 8270C/8270D	1,3,5-Trinitrobenzene
GC-MS	EPA 8270C/8270D	1,3-Dichlorobenzene
GC-MS	EPA 8270C/8270D	1,3-Dinitrobenzene
GC-MS	EPA 8270C/8270D	1,4-Dichlorobenzene
GC-MS	EPA 8270C/8270D	1-Methylnaphthalene
GC-MS	EPA 8270C/8270D	1-Naphthylamine
GC-MS	EPA 8270C/8270D	2,3,4,6-Tetrachlorophenol
GC-MS	EPA 8270C/8270D	2,4,5-Trichlorophenol
GC-MS	EPA 8270C/8270D	2,4,6-Trichlorophenol
GC-MS	EPA 8270C/8270D	2,4-Dichlorophenol
GC-MS	EPA 8270C/8270D	2,4-Dimethylphenol
GC-MS	EPA 8270C/8270D	2,4-Dinitrophenol
GC-MS	EPA 8270C/8270D	2,4-Dinitrotoluene
GC-MS	EPA 8270C/8270D	2,6-Dichlorophenol
GC-MS	EPA 8270C/8270D	2,6-Dinitrotoluene
GC-MS	EPA 8270C/8270D	2-Acetylaminofluorene
GC-MS	EPA 8270C/8270D	2-Chloronaphthalene
GC-MS	EPA 8270C/8270D	2-Chlorophenol
GC-MS	EPA 8270C/8270D	2-Methylnaphthalene
GC-MS	EPA 8270C/8270D	2-Methylphenol
GC-MS	EPA 8270C/8270D	2-Naphthylamine
GC-MS	EPA 8270C/8270D	2-Nitroaniline
GC-MS	EPA 8270C/8270D	2-Nitrophenol
GC-MS	EPA 8270C/8270D	2-Picoline
GC-MS	EPA 8270C/8270D	3,3'-Dichlorobenzidine
GC-MS	EPA 8270C/8270D	3,3'-Dimethylbenzidine
GC-MS	EPA 8270C/8270D	3-Methylcholanthrene
GC-MS	EPA 8270C/8270D	3-Methylphenol(1)
GC-MS	EPA 8270C/8270D	3-Nitroaniline
GC-MS	EPA 8270C/8270D	4,6-Dinitro-2-methylphenol
GC-MS	EPA 8270C/8270D	4-Aminobiphenyl
GC-MS	EPA 8270C/8270D	4-Bromophenyl phenyl ether
GC-MS	EPA 8270C/8270D	4-Chloro-3-methylphenol
GC-MS	EPA 8270C/8270D	4-Chloroaniline
GC-MS	EPA 8270C/8270D	4-Chlorophenyl phenyl ether
GC-MS	EPA 8270C/8270D	4-Methylphenol(1)
GC-MS	EPA 8270C/8270D	4-Nitroaniline
GC-MS	EPA 8270C/8270D	4-Nitrophenol

Biological Tissue		
Technology	**Method**	**Analyte**
GC-MS	EPA 8270C/8270D	4-Nitroquinoline-1-oxide
GC-MS	EPA 8270C/8270D	5-Nitro-o-toluidine
GC-MS	EPA 8270C/8270D	7,12-Dimethylbenz(a)-anthracene
GC-MS	EPA 8270C/8270D	Acenaphthene
GC-MS	EPA 8270C/8270D	Acenphthylene
GC-MS	EPA 8270C/8270D	Aniline
GC-MS	EPA 8270C/8270D	Anthracene
GC-MS	EPA 8270C/8270D	Aramite
GC-MS	EPA 8270C/8270D	Benzo(a)anthracene
GC-MS	EPA 8270C/8270D	Benzo(a)pyrene
GC-MS	EPA 8270C/8270D	Benzo(b)fluoranthene
GC-MS	EPA 8270C/8270D	Benzo(g,h,i)perylene
GC-MS	EPA 8270C/8270D	Benzo(k)fluoranthene
GC-MS	EPA 8270C/8270D	Benzoic Acid
GC-MS	EPA 8270C/8270D	Benzyl alcohol
GC-MS	EPA 8270C/8270D	bis(2-chloroethoxy)methane
GC-MS	EPA 8270C/8270D	bis(2-chloroethyl)ether
GC-MS	EPA 8270C/8270D	bis(2-chloroisopropyl)ether (2,2'-oxybis(1-Chloropropane))
GC-MS	EPA 8270C/8270D	bis(2-ethylhexyl)phthalate
GC-MS	EPA 8270C/8270D	Butyl benzyl phthalate
GC-MS	EPA 8270C/8270D	Carbazole
GC-MS	EPA 8270C/8270D	Chlorobenzilate
GC-MS	EPA 8270C/8270D	Chrysene
GC-MS	EPA 8270C/8270D	Diallate
GC-MS	EPA 8270C/8270D	Dibenzo(a,h)anthracene
GC-MS	EPA 8270C/8270D	Dibenzofuran
GC-MS	EPA 8270C/8270D	Diethyl phthalate
GC-MS	EPA 8270C/8270D	Dimethoate
GC-MS	EPA 8270C/8270D	Dimethyl phthalate
GC-MS	EPA 8270C/8270D	Di-n-butyl phthalate
GC-MS	EPA 8270C/8270D	Di-n-octyl phthalate
GC-MS	EPA 8270C/8270D	Diphenylamine(2)
GC-MS	EPA 8270C/8270D	Disulfoton
GC-MS	EPA 8270C/8270D	Ethyl methacrylate
GC-MS	EPA 8270C/8270D	Ethyl methane sulfonate
GC-MS	EPA 8270C/8270D	Fluoranthene
GC-MS	EPA 8270C/8270D	Fluorene
GC-MS	EPA 8270C/8270D	Hexachlorobenzene
GC-MS	EPA 8270C/8270D	Hexachlorobutadiene

Biological Tissue		
Technology	**Method**	**Analyte**
GC-MS	EPA 8270C/8270D	Hexachlorocyclopentadiene
GC-MS	EPA 8270C/8270D	Hexachloroethane
GC-MS	EPA 8270C/8270D	Hexachloropropene
GC-MS	EPA 8270C/8270D	Indeno(1,2,3-cd)pyrene
GC-MS	EPA 8270C/8270D	Isodrin
GC-MS	EPA 8270C/8270D	Isophorone
GC-MS	EPA 8270C/8270D	Isosafrole
GC-MS	EPA 8270C/8270D	Methyl methane sulfonate
GC-MS	EPA 8270C/8270D	Methyl Parathion
GC-MS	EPA 8270C/8270D	Naphthalene
GC-MS	EPA 8270C/8270D	Nitrobenzene
GC-MS	EPA 8270C/8270D	n-Nitrosodiethylamine
GC-MS	EPA 8270C/8270D	n-Nitrosodimethylamine
GC-MS	EPA 8270C/8270D	n-Nitrosodi-n-butylamine
GC-MS	EPA 8270C/8270D	n-Nitrosodi-n-propylamine
GC-MS	EPA 8270C/8270D	n-Nitroso-diphenylamine(2)
GC-MS	EPA 8270C/8270D	n-Nitrosomethylethylamine
GC-MS	EPA 8270C/8270D	n-Nitrosomorpholine
GC-MS	EPA 8270C/8270D	n-Nitrosopiperidine
GC-MS	EPA 8270C/8270D	n-Nitrosopyrrolidine
GC-MS	EPA 8270C/8270D	o,o,o-Triethyl phosphorothioate
GC-MS	EPA 8270C/8270D	o-Toluidine
GC-MS	EPA 8270C/8270D	p-(Dimethylamino) azobenzene
GC-MS	EPA 8270C/8270D	Parathion
GC-MS	EPA 8270C/8270D	Pentachlorobenzene
GC-MS	EPA 8270C/8270D	Pentachloronitrobenzene
GC-MS	EPA 8270C/8270D	Pentachlorophenol
GC-MS	EPA 8270C/8270D	Pentachloroethane
GC-MS	EPA 8270C/8270D	Phenacetin
GC-MS	EPA 8270C/8270D	Phenanthrene
GC-MS	EPA 8270C/8270D	Phenol
GC-MS	EPA 8270C/8270D	Phorate
GC-MS	EPA 8270C/8270D	Pronamide
GC-MS	EPA 8270C/8270D	Pyrene
GC-MS	EPA 8270C/8270D	Pyridine
GC-MS	EPA 8270C/8270D	Safrole
GC-MS	EPA 8270C/8270D	Sulfotepp
GC-MS	EPA 8270C/8270D	Thionazin (Zinophos)
GC-ECD	EPA 8081A/8081B	Aldrin
GC-ECD	EPA 8081A/8081B	Alpha-BHC

Biological Tissue		
Technology	**Method**	**Analyte**
GC-ECD	EPA 8081A/8081B	Alpha-chlordane
GC-ECD	EPA 8081A/8081B	Beta-BHC
GC-ECD	EPA 8081A/8081B	4,4'-DDD
GC-ECD	EPA 8081A/8081B	4,4'-DDE
GC-ECD	EPA 8081A/8081B	4,4'-DDT
GC-ECD	EPA 8081A/8081B	Delta-BHC
GC-ECD	EPA 8081A/8081B	Dieldrin
GC-ECD	EPA 8081A/8081B	Endosulfan I
GC-ECD	EPA 8081A/8081B	Endosulfan II
GC-ECD	EPA 8081A/8081B	Endosulfan sulfate
GC-ECD	EPA 8081A/8081B	Endrin
GC-ECD	EPA 8081A/8081B	Endrin aldehyde
GC-ECD	EPA 8081A/8081B	Endrin ketone
GC-ECD	EPA 8081A/8081B	Gamma-BHC (Lindane)
GC-ECD	EPA 8081A/8081B	Gamma-chlordane
GC-ECD	EPA 8081A/8081B	Heptachlor
GC-ECD	EPA 8081A/8081B	Heptachlor epoxide
GC-ECD	EPA 8081A/8081B	Methoxychlor
GC-ECD	EPA 8081A/8081B	Toxaphene
GC-ECD	EPA 8081A/8081B	Technical Chlordane
GC-ECD	EPA 8082/8082A	Aroclor-1016
GC-ECD	EPA 8082/8082A	Aroclor-1221
GC-ECD	EPA 8082/8082A	Aroclor-1232
GC-ECD	EPA 8082/8082A	Aroclor-1242
GC-ECD	EPA 8082/8082A	Aroclor-1248
GC-ECD	EPA 8082/8082A	Aroclor-1254
GC-ECD	EPA 8082/8082A	Aroclor-1260
GC-ECD	EPA 8082/8082A	Aroclor-1262
ICP-AES	EPA 6010B/6010C	Aluminum
ICP-AES	EPA 6010B/6010C	Antimony
ICP-AES	EPA 6010B/6010C	Arsenic
ICP-AES	EPA 6010B/6010C	Barium
ICP-AES	EPA 6010B/6010C	Beryllium
ICP-AES	EPA 6010B/6010C	Cadmium
ICP-AES	EPA 6010B/6010C	Calcium
ICP-AES	EPA 6010B/6010C	Chromium
ICP-AES	EPA 6010B/6010C	Cobalt
ICP-AES	EPA 6010B/6010C	Copper
ICP-AES	EPA 6010B/6010C	Iron
ICP-AES	EPA 6010B/6010C	Lead

Biological Tissue		
Technology	**Method**	**Analyte**
ICP-AES	EPA 6010B/6010C	Magnesium
ICP-AES	EPA 6010B/6010C	Manganese
CVVA	EPA 7471A/7471B	Mercury
ICP-AES	EPA 6010B/6010C	Molybdenum
ICP-AES	EPA 6010B/6010C	Nickel
ICP-AES	EPA 6010B/6010C	Potassium
ICP-AES	EPA 6010B/6010C	Selenium
ICP-AES	EPA 6010B/6010C	Silver
ICP-AES	EPA 6010B/6010C	Sodium
ICP-AES	EPA 6010B/6010C	Thallium
ICP-AES	EPA 6010B/6010C	Tin
ICP-AES	EPA 6010B/6010C	Titanium
ICP-AES	EPA 6010B/6010C	Vanadium
ICP-AES	EPA 6010B/6010C	Zinc
ICP-MS	EPA 6020/6020A	Antimony
ICP-MS	EPA 6020/6020A	Arsenic
ICP-MS	EPA 6020/6020A	Barium
ICP-MS	EPA 6020/6020A	Beryllium
ICP-MS	EPA 6020/6020A	Cadmium
ICP-MS	EPA 6020/6020A	Chromium
ICP-MS	EPA 6020/6020A	Cobalt
ICP-MS	EPA 6020/6020A	Copper
ICP-MS	EPA 6020/6020A	Lead
ICP-MS	EPA 6020/6020A	Manganese
ICP-MS	EPA 6020/6020A	Nickel
ICP-MS	EPA 6020/6020A	Selenium
ICP-MS	EPA 6020/6020A	Silver
ICP-MS	EPA 6020/6020A	Thallium
ICP-MS	EPA 6020/6020A	Vanadium
ICP-MS	EPA 6020/6020A	Zinc
UV-VIS	EPA 9012A	Cyanide
GC/FID	EPA 8015B/8015C	GRO
TOC	EPA 9060AMod	Total Organic Carbon
Pensky-Martens Closed-Cup	EPA 1010	Ignitability
ISE	EPA 9045C/D	pH
UV-VIS	EPA 7196A	Hexavalent Chromium
Preparation	**Method**	**Type**
Purge and Trap	EPA 5035/5035A	Volatile Organic Compounds
Acid Digestion	EPA 3050B	Hotblock Assisted
Extraction	EPA 3540C	Soxhlet

LABORATORY ACCREDITATION BUREAU

Certificate # L2251

Biological Tissue		
Preparation	**Method**	**Type**
Extraction	EPA 3541	Automated Soxhlet Extraction
Alkaline Digestion	EPA 3060A	Hexavalent Chromium
Distillation and UV-VIS	EPA 9010B	Total and Amenable Cyanide

Notes:

1) This laboratory offers commercial testing service.

Approved By: _____ Date: April 26, 2010

R. Douglas Leonard
Chief Technical Officer

Issued: 04/23/10 Revised 04/26/10

APPENDIX F

LABORATORY STANDARD OPERATING PROCEDURES

COMPUCHEM

CompuChem
A Division Of
Liberty Analytical Corp.

501 Madison Avenue
Cary, NC 27513

NELAP accredited

SOP DOCUMENTATION FORM

This form must accompany all new and revised Standard Operating Procedures (SOPs) when you turn them in to Quality Assurance for review. Please fill out the entire block below (except effective date).

This is a new procedure _____ revised procedure ✓ outdated procedure (archive) _____

- Procedure Code: IP179 SOP Section #: 1.1.3.2 Revision #: 10

SOP Title: Preparation and Analysis of Gasoline Range Organics (GRO) in Soil/Sediment samples by Purge and Trap following SW-846, CALUFT, and ~~TNO~~ TNGRO m4/24/07

Effective date: (QA fills in) April 24, 2007

- Procedure prepared by: Valgma Lopez Date: April 24, 2007
- Procedure approved by: (If the manager prepared the SOP, a qualified second party should sign) Date: 4-24-07
- Reason for change: update for DOD corrective Action plan
- This procedure meets the requirements of the following approved method references: SW-846, 3rd Edition Update III, method 8015B, CALUFT, May 1988; TNGRO

Procedure approved by a QA Representative (unless QA Representative signed above):

_____ Date: _____

On an annual basis: Lab managers are required to review lab practices and revise the SOP if necessary. If no revision is necessary, indicate by your signature that the SOP has been reviewed.

Annual Review—Signature: _____ Date: 8-30-07

Annual Review—Signature: _____ Date: 6-5-8

Annual Review—Signature: _____ Date: 6-23-9

Annual Review—Signature: _____ Date: _____

Instrument Procedure 179: Preparation and Analysis of Gasoline Range Organics (GRO) in Soil/Sediment Samples by Purge and Trap Following SW-846, CA LUFT, and TN GRO

Table of Contents

SECTION	PAGE NO.
Section 1.0 – Scope and Application	2
Section 2.0 – Summary of Method	2-3
Section 3.0 – Definitions	3-4
Section 4.0 – Interferences	5
Section 5.0 – Safety	5
Section 6.0 – Equipment and Supplies	5-6
Section 7.0 – Reagents and Standards	6-8
Section 8.0 - Sample Preservation and Storage	8
Section 9.0 – Quality Control	8-11
Section 10.0 – Calibration and Standardization	11-15
Section 11.0 – Procedure	15-19
Section 12.0 – Data Analysis and Calculations	19-22
Section 13.0 – Method Performance	22
Section 14.0 – Pollution Prevention	22
Section 15.0 – Waste Management	22
Section 16.0 – References	23
Section 17.0 – Attachments as Tables, Diagrams, and Flowcharts	23
Attachment 1	24
Attachment 2	25

ORIGINAL MASTER COPY CONTROLLED COPY
If words above are not highlighted, this is an uncontrolled copy of this document.

Instrument Procedure 179: Preparation and Analysis of Gasoline Range Organics (GRO) in Soil/Sediment Samples by Purge and Trap Following SW-846, CA LUFT, and TN GRO

1.0 Scope and Application

This method is used to detect purgeable total petroleum hydrocarbons (TPH), including gasoline range organics (GRO), in soil or sediment samples by GC/FID analysis using Method 8015A modified or Method 8015B. GROs correspond to the range of alkanes from C_6 to C_{10} and covering a boiling point range of approximately 60° C - 170° C. Qualitative and quantitative data are generated using an FID.

The reporting limit is the low level calibration standard concentration. The reporting limits are as follows:

- Modified method 8015A and CA LUFT – 0.50 mg/Kg
- Method 8015B low-level – 0.5 mg/Kg
- Method 8015B medium-level – 25.0 mg/Kg or 5.0 mg/Kg
- TN EPH – 1.0 mg/Kg

Staff members performing the procedures described in this SOP are responsible for reading, understanding, and complying with the SOP requirements. Supervisors are responsible for directing the analyst to the controlled SOP, and providing adequate explanation of the material contained therein.

This procedure is restricted to use by or under the supervision of analysts experienced in the instrumentation or preparative methods and who have demonstrated the ability to generate acceptable results through QC samples and analyst capability studies. Refer to the Quality Manual for procedures for performing and documenting demonstration of capability.

2.0 Summary of Method

2.1 Method 5030/8015A modified and CA LUFT.

Five grams of sample, collected unpreserved in a glass jar, are weighed into a sparging tube. The tube is attached to the autosampler and 5 mL of reagent water spiked with surrogate solution is added. Analysis proceeds as outlined in section 2.3.

If it is determined that the sample needs to be diluted, no less than 1 gram of the sample can be analyzed in order to bring the analytes into the upper half of the analytical range.

NOTE: Modified method 8015A is not allowed for samples reported to the SC DHEC.

2.2 Method 5035A/8015B

Samples received in EnCore™ sampling devices are either frozen for low-level analysis or extracted with methanol for medium-level analysis in the laboratory within 48 hours of collection.

For low-level analyses, samples are extruded from the EnCore™ sampler into sparging tubes. The tube is attached to the autosampler and 5 mL of reagent water spiked with surrogate solution is added. The analysis proceeds as in section 2.3.

For medium-level analyses, 100 to 250 µL (based on client reporting requirements) of methanol extracts (containing surrogate) are added to 5 mL aliquots of reagent water. The samples are injected into sparging tubes that have been connected to the autosampler. The analysis proceeds as in section 2.3.

2.3 Once the samples have been prepared and loaded onto the autosampler, analysis proceeds as follows. Helium is bubbled through the sample. The target analytes are efficiently transferred to the vapor phase. The vapor is then swept through a sorbent trap where the target analytes are trapped. After purging is completed, the trap is heated and back flushed with helium to desorb the target analytes onto a GC column. The GC is temperature programmed to separate the target analytes. The analytes are detected by an FID.

The FID, which is generally non-selective and responsive to all organic compounds, is used to sum the areas of all the peaks over a given range.

3.0 <u>Definitions</u>

3.1 Method detection limit (MDL) – The minimum concentration of an analyte that can be measured and reported with 99% confidence that the analyte concentration is greater than zero and is determined from analysis of a sample in a given matrix containing the analyte (40 CFR, Part 136, Appendix B.)

3.2 Reporting Limit – The laboratory reporting limit is based on the lowest multipoint calibration standard concentration. For organic methods, values detected below

the reporting limit and above the MDL may be reported and qualified as an estimated concentration.

To meet the requirements of the DOD-QSM, the reporting limit must be a minimum of three times the MDL. If the reporting limit is not at least three times higher than the MDL value, it is adjusted upward in order to achieve this minimal ratio. It may be adjusted higher than three times depending on the concentration range of the calibration curve and the ability to meet method linearity requirements.

3.3 Reporting Units – mg/Kg

3.4 An SDG is defined by the following, whichever is more frequent:

- each 20 field samples received within a case, or
- each 7 calendar day period during which field samples in a case are received (14 calendar days if requested by the client) beginning with the receipt of the first sample.

NOTE: The DOD-QSM and SC DHEC do not accept the SDG approach, unless the samples are prepared in a single batch. When a group of up to 20 field samples of a similar matrix are prepared as one batch, method-specified QC samples such as a method blank, laboratory control sample, matrix spike, matrix spike duplicate, and matrix duplicate must also be prepared together at a rate of 5% (10% for SC DHEC). If samples are batched together from different sites, project-specific QC must be processed.

3.5 Flame Ionization Detector (FID) – a detector that measures the electrical current from ions produced by controlled combustion of chromatographic eluates.

3.6 GALP – good automated laboratory practices; a quality assurance (QA) measure to document that the computer and data acquisition systems are sufficiently protected from tampering and that any changes made to the data have a documented audit trail.

3.7 SC DHEC – South Carolina Department of Health and Environmental Control

3.8 DOD-QSM – Department of Defense Quality Systems Manual

4.0 Interferences

4.1 Samples can be contaminated by diffusion of volatile organics through the sample container septum during shipment and storage. A trip blank carried through sampling and storage serves as a check of contamination.

4.2 Contamination by carryover is possible when a high concentration sample is analyzed. Any sample analyzed after a high concentration sample should be reanalyzed.

4.3 The vessel that a sample is run in must be verified as clean by running a blank in it or a clean sample previously. Check the blank or sample for the appearance of non-target as well as target analytes.

5.0 Safety

5.1 All samples and standard reference materials must be assumed to be hazardous and must be handled to minimize exposure.

5.2 All samples must be prepared under a laboratory fume hood. Appropriate protective equipment and clothing must be used under the assumption that all samples are potentially hazardous. During sample preparation, glasses, gloves and lab coats are a minimum requirement. The persistent presence of noxious odors may be indicative of failure of the laboratory ventilation system and must be reported to a supervisor or manager.

5.3 Laboratory staff must review the Chemical Hygiene Plan for general safety policies, and Material Safety Data Sheets for reagents used in the laboratory. The MSDS are located in the Quality Assurance department.

6.0 Equipment and Supplies

6.1 10 µL gastight syringes, Hamilton 1701N or equivalent

6.2 5 mL gastight syringes, Hamilton or equivalent

6.3 25 µL gastight syringes, Hamilton or equivalent

6.4 50 µL gastight syringes, Hamilton or equivalent

6.5 Top-loading balance, capable of weighing accurately to 0.01 grams

6.6 Column: RTX-Volatiles

6.7 Injection port, not used. A stainless steel low dead volume connector is used to connect the transfer line from the purge and trap directly to the capillary column.

6.8 Gas chromatograph: Varian 3400

6.9 Trap: Supelco Purge Trap J

6.9 Detector: Varian FID Detector Model 3400

6.10 Purge device: Tekmar 2016 ALS The transfer line is directly connected into a Tekmar LSC 2000.

6.11 Trap and desorb device: The Tekmar LSC 2000

7.0 Reagents and Standards

Refer to the Standards Preparation Logbook for details on preparation of standards used in this procedure.

7.1 Reagent water – All water used in this procedure must be reagent-grade Type I water with regard to resistivity of > 10 mega ohm-cm (19th and 20th Editions of Standard Methods, Method 1080) which is subsequently purged with an inert gas and demonstrated to meet the blank contamination acceptance criteria contained in this Standard Operating Procedure (SOP). It is referred to throughout the remained of this SOP as reagent water.

7.2 Methanol – purge and trap grade

7.3 Primary 8015B calibration standard - used to prepare 8015A modified, 8015B and CA LUFT initial and continuing calibration standards.

7.3.1 Prepare the primary 8015B calibration standard at 2.5 mg/mL by adding 250 µL Restek unleaded gasoline composite standard (50 mg/mL) to a 5 mL volumetric flask containing purge and trap methanol and bring to volume. Prepare this standard every six months.

7.3.2 Dilutions are made by the analyst for the working level calibration standards according to the instructions in Section 10.0.

7.4 Second source calibration verification standard – used to verify the initial calibration and to prepare the low-level LCS, LCSD, MS, and MSD)

7.4.1 Prepare second source calibration verification standard at 2.5 mg/mL by adding 1 mL AccuStandard Gasoline Composite Mix (5.0 mg/mL) to a 2

mL volumetric flask containing purge and trap methanol and bring to volume. Prepare this standard every six months.

7.5 GRO Medium Level LCS Standard

7.5.1 Transfer the 50 mg/mL NSI gasoline standard to a mini-inert vial for use. This standard expires in 6 months or at manufacturer's expiration date, whichever occurs sooner.

7.6 GRO Medium Level Surrogate

7.6.1 Transfer 20 mg/mL AccuStandard 1, 4-Dichlorobutane to a mini-inert vial for use. This standard expires in 6 months or at manufacturer's expiration date, whichever occurs sooner.

7.7 TN GRO 5.0 mg/mL calibration standard – used to prepare lowest three points of the calibration curve and the continuing calibration standard.

7.7.1 Prepare the TN GRO 5.0 mg/mL calibration standard by adding 1 mL AccuStandard TN GRO standard (10 mg/mL total components) to a 2 mL volumetric flask containing purge and trap methanol and bring to volume. Prepare this standard every six months.

7.8 TN GRO 10.0 mg/mL calibration standard – purchased as 10 mg/mL from AccuStandard and used to prepare the highest two points of the TN GRO calibration curve and the retention time window standards for all methods.

7.9 Second source TN GRO 5.0 mg/mL standard – used to prepare the TN GRO LCS, LCSD, MS, and MSD.

7.9.1 Prepare the TN GRO 5.0 mg/mL standard by adding 1 mL TN GRO 10.0 mg/mL standard to a 2 mL volumetric flask containing purge and trap methanol and bring to volume. Prepare this standard every six months.

7.9.2 This solution, prepared at the mid-point concentration of the 8015B calibration curve, is used for the 72-hour retention time window study performed for 8015B GRO and as the retention time marker standard analyzed prior to initial and daily calibrations. The standard consists of individual alkane compounds including 2-methylpentane (first eluting compound) and 1,2,4-trimethylbenzene (last eluting compound). (See Attachment 2.)

7.10 GRO Surrogate Spiking Solution at 5.0 mg/mL

ORIGINAL MASTER COPY CONTROLLED COPY
If words above are not highlighted, this is an uncontrolled copy of this document.

7.10.1 Prepare the GRO Surrogate Spiking Solution by adding 500 µL AccuStandard 1, 4-Dichlorobutane (20.0 mg/mL) in 2 mL volumetric flask containing purge and trap methanol and bring to volume. Prepare this standard every six months.

7.11 TN Surrogate Spiking Solution at 0.05 mg/mL

7.11.1 Prepare the TN Surrogate Spiking Solution by adding 0.25 mL of AccuStandard p-Isopropyltoluene (2 mg/mL) to a 10 mL volumetric flask containing purge and trap methanol and bring to volume. Prepare this standard every three months.

7.12 Preparation of the laboratory control sample (LCS), matrix spike and matrix spike duplicate (MS/MSD), and blank is detailed in Section 11.0.

7.13 Preparation of the initial and continuing calibration standards is given in section 10.0.

7.14 Standard Storage Requirements

7.14.1 Standards are stored in the freezer at –10° C to -20° C.

8.0 Sample Preservation and Storage

8.1 Samples are preserved, and stored according to the tables in Sample Control SOP 4.1, "Receiving Samples" and 4.6, "Storing Samples." Sample holding times are also listed.

8.2 Soil samples may be collected in unpreserved glass containers for Method 8015A modified. Holding time is 14 days from sample collection.

8.3 Sample received in EnCore™ samplers must be frozen or preserved with methanol within 48 hours from sample collection. Analytical holding time after preservation is 14 days from sample collection. Refer to Sample Preparation Procedure –238, "Preparation of Soil/Sediment/Sludge Samples for the Analysis of Volatile Organic Compounds by Closed-System Purge and Trap using SW-846 Method 5035" for details of soil sample preservation.

9.0 Quality Control

9.1 Surrogates

9.1.1 All field and QC samples are spiked with surrogate.

9.1.2 Surrogate recovery criteria are 40 to 160% for all methods.

9.1.3 If acceptance criteria in section 9.1.2 are not met, re-analyze the sample.

9.1.4 To meet the requirements of the DOD-QSM, if the surrogate recovery control limits in 9.1.2 are not met and sufficient volume remains, re-prepare and reanalyze the sample. If obvious chromatographic interference with the surrogate is present, re-analysis may not be necessary.

9.1.4.1 If field sample results are reported with failing surrogate recoveries, qualify the results as estimated concentrations in the narrative. Refer to the DoD-QSM "J" flag.

9.1.4.2 If QC samples results are reported with failing surrogate recoveries, qualify the results as estimated concentrations in the narrative. Refer to the DoD-QSM "Q" flag.

9.2 Method Blanks

9.2.1 Method blanks are prepared and analyzed with every 12 hour calibration period or batch of not more than 20 samples. **The method consists of a matrix similar to that of its associated samples that is free from the analytes of interest. The method blank is processed with the same procedures under the same conditions as the associated samples.**

9.2.2 The concentration of analyte in the blank cannot exceed the reporting limit.

9.2.3 To meet the requirements of the DOD-QSM, the concentration of analyte in the method blank must not exceed one half the reporting limit.

9.2.4 If the method blank fails the acceptance criteria in sections 9.2.2 or 9.2.3, the source of the problem must be investigated and appropriate corrective action taken. All samples processed with a method blank that does not meet acceptance criteria must be reanalyzed.

9.2.5 Any analyte concentration present in the blank that falls between the MDL and the reporting limit is reported as an estimate and flagged with a "J". Any analyte that is detected in the blank and associated samples is qualified with a "B" flag on the report form and explained in the SDG narrative.

9.2.6 For project specific QC sample requirements for Ohio Voluntary Action Program (VAP) projects, refer to the Laboratory Information Management System (LIMS).

9.3 Laboratory Control Sample (LCS)

9.3.1 **The LCS is a matrix free from the analytes of interest spiked with verified known amounts of analytes. For this procedure, the** LCS is Ottawa sand fortified with the gasoline spiking solution and surrogate. The spiking solution is from a different source than that used to prepare the calibration curve and therefore, serves to verify the calibration curve as well as to determine the accuracy of the method. The LCS is prepared with every 20 samples or calibration batch, whichever is more frequent.

9.3.2 The results of the LCS are used to confirm the presence of sample matrix interference in the MS/MSD analyses and that the analytical system is in control.

9.3.3 Control limits for the LCS spike recovery are 75 to 125 for all methods.

9.3.4 The LCS must meet the acceptance criteria in section 9.3.3 or the entire batch must be re-prepared and analyzed.

9.3.5 For TN GRO, a LCS duplicate (LCSD) is also required. The RPD criterion is 20.

9.3.5.1 The LCS/LCSD must meet the acceptance criteria in sections 9.3.3 and 9.3.5 or the entire batch must be re-prepared and analyzed.

9.4 Matrix Spike / Matrix Spike Duplicate (MS/MSD)

9.4.1 A matrix spike and matrix spike duplicate must be performed for each group of samples of a similar matrix per each sample delivery group, when requested by the client.

9.4.2 The spike recovery criteria for the MS/MSD are 75 to 160% for all methods. The RPD for all methods is 20.

9.4.3 To meet the requirements of the DOD-QSM, the MS/MSD spike recoveries must be assessed using the LCS control limits and the RPD must be ≤ 30%.

9.4.3.1 If the MS/MSD acceptance criteria in section 9.4.3 are not met, the client must be contacted for guidance.

9.4.3.2 Any analyte concentration detected in the original un-spiked sample associated with MS/MSD that does not meet acceptance criteria must be qualified in the SDG narrative as an estimated concentration. Refer to the DOD-QSM "J" flag.

9.4.4 When recoveries do not meet the acceptance criteria or interferences preclude proper assessment of the data, results of the LCS are evaluated to verify that the analytical system is in control.

9.4.5 If surrogate recovery in the original un-spiked sample is not within acceptance limits and the MS/MSD surrogate recoveries are within limits, the original sample should be reanalyzed. If the original sample and the MS/MSD analyses yield the same unacceptable surrogate recoveries, then the sample does not require reanalysis.

9.5 Duplicates, at a frequency of 5%, are required when processing samples submitted to meet the regulatory requirements of the State of North Carolina DENR. The MS/MSD fulfills this requirement.

9.6 Retention Time Window Study

9.6.1 A retention time window study is conducted over a 72-hour period. Three analyses of the TN GRO standard, standard are performed and the mean and standard deviation of the retention time of the first eluting component 2-methypentane and the last eluting component 1,2,4-trimethylbenzene are calculated. The study is performed once per year or after major instrumentation maintenance such as column change occurs.

9.6.2 The retention time window is established, prior to performing initial calibrations and daily calibration verifications. Subtract 3 standard deviations of the mean retention time (determined from the current 72-hour retention time window study) from the elution time of the first component 2-methypentane in the retention time marker standard and add 3 standards deviations of the mean retention time to the elution time of the last component 1, 2, 4-trimethylbenzene in the retention time marker standard. The data associated with the analysis of the retention time marker is provided in the report.

9.6.3 The retention time window derived in section 9.6.2 is applied to the analysis of the continuing calibration verification standard and all subsequent field and QC sample analyses during the analytical sequence.

10.0 Calibration and Standardization

10.1 Initial Calibration

10.1.1 Before analyzing samples and required blanks, establish the retention time range with the 20 mg/L TN GRO standard. Calibrate each instrument at five concentrations to determine the instrument sensitivity and linearity of the GC/FID response for the purgeable target compounds.

10.1.2 Prepare calibration standards for low-level soil analysis by adding gasoline standard and surrogate to 5 mL gastight syringes containing sparged reagent water. Add the contents of the syringes to glass purge tubes that contain 5 grams of Ottawa sand which are attached to the instrument's autosampler.

10.1.3 Prepare calibration standards for medium-level analyses by adding the a 2.5 mg/mL gasoline standard solution and 5.0 mg/mL surrogate solution to 5 mL gastight syringes containing sparged reagent water and 100 or 250 µL of methanol. Prepare the working standards as follows:

µL of GRO STD Solution	Working STD Concentration	On-column STD Amount
0.5 µL	0.25 mg/L	1.25 µg
2 µL	1.0 mg/L	5.0 µg
10 µL	5.0 mg/L	25.0 µg
20 µL	10.0 mg/L	50.0 µg
50 µL	25.0 mg/L	125.0 µg

µL of Surrogate Solution	Surrogate Concentration	On-column surrogate Amount
0.5 µL	0.5 mg/L	2.5 µg
2 µL	2.0 mg/L	10.0 µg
10 µL	5.0 mg/L	25.0 µg
20 µL	10.0 mg/L	50.0 µg

50 µL	20.0 mg/L	100.0 µg

10.1.4 Five levels of working standards are prepared for the calibration curve by the analyst using a 2.5 mg/mL gasoline standard solution and 5.0 mg/mL surrogate solution for 8015A modified, 8015B and CA LUFT. Prepare the working standards as follows.

µL of GRO STD Solution	Working STD Concentration	On-column STD Amount
1 µL	0.5 mg/L	2.5 µg
2 µL	1.0 mg/L	5.0 µg
10 µL	5.0 mg/L	25.0 µg
20 µL	10.0 mg/L	50.0 µg
50 µL	25.0 mg/L	125.0 µg

µL of surrogate Solution	Surrogate Concentration	On-column surrogate Amount
1 µL	1.0 mg/L	5.0 µg
2 µL	2.0 mg/L	10.0 µg
10 µL	5.0 mg/L	25.0 µg
20 µL	10.0 mg/L	50.0 µg
50 µL	20.0 mg/L	100.0 µg

10.1.5 Five levels of working standards are prepared for TN GRO using the 5.0 and 10 mg/mL gasoline standards solutions and the 0.05 mg/L TN GRO surrogate solution. The 10 mg/mL gasoline standard solution is used to prepare the two high concentration working standards. Prepare the working standards as follows.

µL of TN GRO STD Solution	Working STD Concentration	On-column Amount
1 µL	1.0 mg/L	5.0 µg
2 µL	5.0 mg/L	25.0 µg
10 µL	10.0 mg/L	50.0 µg

10 µL	20.0 mg/L	100.0 µg
20 µL	40.0 mg/L	200.0 µg

µL of TN surrogate Solution	TN surrogate Concentration	On-column Amount
1 µL	0.01 mg/L	0.05 µg
5 µL	0.05 mg/L	0.25 µg
10 µL	0.1 mg/L	0.5 µg
20 µL	0.2 mg/L	1.0 µg
25 µL	0.25 mg/L	1.25 µg

10.1.6 The percent relative standard deviation (%RSD) of the five initial calibration standards must be ≤20% (25% for TN GRO). If this criterion is met, then the mean calibration factors (CF) can be used to calculate the analyte and surrogate concentrations.

10.1.7 If the %RSD is >20% (25% for TN GRO), a least squares regression of the calibration curve must be used. If the correlation coefficient of the calibration curve is ≥ 0.995, the initial calibration curve is acceptable and may be used to calculate analyte and surrogate concentrations. The intercept of the calibration curve must not be forced through origin, but must be calculated using the five data points.

10.1.8 If the acceptance criteria in section 10.1.6 or 10.1.7 are not met, the following corrective actions are performed. After the problem is identified and corrected, a new initial calibration must be analyzed.

10.1.8.1 If CFs have random variation, check for leaks in the purge vessels.

10.1.8.2 If CFs increase with concentration, check for active sites in the chromatographic system.

10.1.8.3 If CFs from direct injections remain consistent, the active sites are probably in the purge and trap system.

10.1.8.4 If CFs decrease with concentration, check for contamination of the system by analyzing a blank.

10.1.9 The validity of the calibration curve is verified using a second source standard. For this method, the LCS serves this purpose and is prepared following the preparation procedure in Section 11.1.3 following.

10.1.9.1 To meet the requirements of the DOD-QSM, a second source initial calibration verification (ICV) standard must be analyzed after the initial calibration.

10.1.9.2 The analyte recovery in the ICV must be ≤ 20% of that in the initial calibration.

10.1.9.3 If the ICV fails, re-analyze it. If the re-analysis fails, perform corrective actions and analyze a new initial calibration.

10.2 Continuing Calibration Verification (CCV)

10.2.1 A continuing calibration verification standard must be analyzed, after establishing the retention time range with the 20 mg/L TN GRO standard, to start a daily sequence and must meet acceptance criteria in order for sample analysis to proceed. A 5 ppm gasoline standard is used as the CCV standard. Each calibration factor, must be ≤15% difference (%D) (10%D for CA LUFT and 25%D for TN GRO) when compared to the mean calibration factor of the most recent acceptable initial calibration.

10.2.2 If the %D exceeds 15% (10% for CA LUFT and 25% for TN GRO), then corrective action must be taken and the CCV re-analyzed. If the re-analyses fails criteria, a new initial calibration must be analyzed.

10.2.3 Once the daily continuing calibration standard and the method blank meets criteria, samples are run and subsequently an acceptable continuing calibration must be analyzed within twelve hours of the injection time of the daily continuing calibration. Additional continuing calibration standards can be analyzed within this twelve hour period to bracket sample analyses.

10.2.3.1 To meet the requirements of the DOD-QSM, an acceptable CCV standard must be analyzed every 10 samples and at the end of the analytical sequence.

10.3 Balance Calibration

10.3.1 Ensure the balance is calibrated for the day prior to weighing samples. Refer to Quality Control SOP 13.16, "Top Loading Balance Calibration and Maintenance."

11.0 Procedure

Documentation must follow the requirements in Quality Control SOP 13.6 "Proper Documentation Procedures".

11.1 Method 8015A modified Low-Level Sample Preparation

Note: This option is not allowed for South Carolina Samples.

11.1.1 Mix sample well, discard any foreign objects such as sticks, stones/rocks, and leaves. Weigh out 5 grams of sample into a sparging tube. Add 5 mL of reagent water spiked with 5 µL of 5.0 mg/mL surrogate solution to the tube a 5 mL gastight syringe. Attach the tube to the instrument's autosampler. For TN GRO add 10 µL of a 0.050 mg/mL surrogate solution.

11.1.2 Prepare a method blank by weighing 5 grams of Ottawa sand into a sparging tube and attach to the instrument's autosampler. Add 5 mL of reagent water spiked with 5 µL of 5.0 mg/mL surrogate solution using a 5 mL gastight syringe. Analyze the method blank before samples and after the continuing calibration. For TN GRO add 10 µL of a 0.050 mg/mL surrogate solution.

11.1.3 Prepare the LCS by weighing 5 grams of Ottawa sand into a sparging tube and attach the tube to the instrument's autosampler. Add appropriate surrogate and 10 µL of a 2.5 mg/mL second source gasoline standard. Add 10 µL of a 5.0 mg/mL second source standard for TN GRO. Prepare a duplicate LCS, for TN GRO.

11.1.4 Prepare a MS/MSD using the procedure in section 11.1.1. In addition to surrogate solution, add 10 µL of 2.5 mg/mL second source gasoline standard. Add 10 µL of the 5.0 mg/mL second source standard for TN GRO.

11.2 Method 8015B, CA LUFT, and TN GRO Medium-Level Sample Preparation

Note: The TN GRO method requires 10 g of soil and 10 mL of methanol for the extraction.

11.2.1 Prepare sample extracts by weighing 5.0 grams of sample into 5 mL of methanol in a 40 mL vial. Add 62.5 µL of 20 mg/mL surrogate solution (0.5 mL of 0.050 mg/mL surrogate solution for TN GRO) for a 100 µL

extract volume. Shake the sample for 2 minutes, and then allow the soil to settle.

11.2.1.1 For clients that require a 250 µL of extract volume, weigh 5.0 grams of sample into 5 mL of methanol in a 40 mL vial. Add 25 µL of 20mg/mL surrogate solution. Shake the sample for 2 minutes, and then allow the soil to settle.

11.2.2 Prepare a method blank by weighing 5.0 grams of Ottawa sand into 5 mL of methanol in a 40 mL vial. Add 62.5 µL of 20 mg/mL surrogate solution (0.5 mL of 0.050 mg/mL of surrogate solution for TN GRO) for a 100 µL extract volume. Shake the sample for 2 minutes, and then allow the sand to settle

11.2.2.1 For clients that require a 250 µL of extract volume, weigh 5.0 g of sand into 5 mL of methanol in a 40 mL vial. Add 25 µL of 20 mg/mL surrogate. Shake the sample for 2 minutes, and then allow the sand to settle.

11.2.3 Prepare a laboratory control sample by weighing 5.0 grams of Ottawa sand into 5 mL of methanol in a 40 mL vial. Add 62.5 µL of 20 mg/mL surrogate solution (0.5 mL of 0.050 mg/mL surrogate solution for TN GRO) and 50 µL of 25 mg/mL second source standard (0.5 mL of 5 mg/mL second source standard for TN GRO) for a 100 µL of extract volume. Shake the sample for 2 minutes, and then allow the sand to settle.

11.2.3.1 For clients that require a of 250 µL of extract volume, weigh 5.0 g of Ottawa sand into 5 mL of methanol in a 40 mL vial. Add 25 µL of 20 mg/mL surrogate solution (0.5 mL of 0.050 mg/mL surrogate solution for TN GRO), and 20 µL of 50 mg/mL NSI Gasoline Standard. Shake the sample for 2 minutes, and then allow the sand to settle.

11.2.4 For duplicate matrix spikes, follow steps in 11.2.3 and use 5.0 g of sample rather than Ottawa sand.

11.2.5 Prepare a 100 µL or 250 µL aliquot of the methanol extract for analysis by purge and trap by using the following procedure.

11.2.5.1 Add 100 µL of methanol extract to 4.9 mL of reagent water in a 5 mL gastight syringe.

11.2.5.2 Add 250 µL of methanol extract to 4.75 mL of reagent water in a 5 mL gastight syringe.

11.2.6 Heated purge is required for low-level soil methods 8015A modified and 8015B. This is accomplished by placing a thermal sleeve on the purge vessel during sample purging.

11.3 Purge and trap analysis

11.3.1 Purge vessels containing standards and samples are loaded into the of the instrument's autosampler (2016).

11.3.2 The ALS 2016 autosampler is controlled by the Tekmar LSC 2000 and operated in the following manner.

11.3.2.1 On the front panel of the LSC 2000, push the "F2" button for ALS.

11.3.2.2 For sequential vessels, arrow to the "Start" position and press "Enter." Enter the position number for the first analysis and press "Enter." Use the arrow key to go to the last position ("Stop"). Use the "Enter" key to enter the vessel number for the last analysis. Push the "F2" key and check that the enable schedule is "N" for "No.". Push "F4" two times to exit.

11.3.2.3 To schedule samples to run in vessels that are not in sequential order, push the "F2" button for "Schedule." Answer "Enable schedule?" with "Y" for "Yes". Arrow to each start and stop position and enter the numbers by pressing "Enter", the number then "Enter" again. Press "F4" to exit when complete.

11.3.2.4 Begin sample analysis by pressing the "start" button on the autosampler.

11.4 Purge and Trap Setup

11.4.1 Purge and Trap Conditions

- Standby Temperature Ambient
- Valve Temperature 120 °C
- Line Temperature 120 °C

- Purge Preheat 40 °C (heated purge only)
- Purge Time 8 min.
- Desorb Preheat 175 °C
- Desorb 4 min. at 240 °C
- Bake 8 min. at 260 °C

11.5 Purge and trap troubleshooting

11.5.1 Check the purge flow in a suspect position by purging that position on the autosample while measuring the flow from the vent on the LSC 2000. It should be 36 – 38 mL/min. If there is little flow, check the thin tubing between the autosampler and the vessel for constriction or obstruction.

11.5.2 Varying purge flow rates observed in the vessels between the positions are usually due to incomplete switching of the 6 port valve and adjustments by the service department need to be made.

11.6 GC Conditions

- Carrier gas Helium
- Injector Temperature 50 °C
- Initial Temperature 45 °C
- Initial Time 5 min.
- Flow Rate 8.2 mL/min.
- Ramp Rate 5 °C/min to 100 °C hold for 0.5 min.
  50 °C/min to 220 °C hold for 2.0 min.
- GC Mode capillary
- Detector temperature 250° C
- Final hold time 2.0 min.
- Makeup flow 30 mL/min.

11.7 Detector Conditions

- hydrogen flow rate 30 mL/min
- air flow rate 300 mL/min
- polarizing voltage 100 V
- Attentuation 8-10

12.0 <u>Data Analysis and Calculations</u>

Calculations must be consistent with the Quality Control SOP 13.4, "Numerical Data Reduction."

12.1 Calculation of the mean or average of a set of values:

$$\overline{X} = \frac{\sum_{i=1}^{n} X_i}{n}$$

where: n = total number of values
x_i = each individual value used to calculate the mean
x = the mean of n

12.2 Calculation of the standard deviation of a set of values:

$$\text{Standard deviation} = \sqrt{\frac{\sum_{i=1}^{n}\left(X_n - \overline{X}\right)^2}{n-1}}$$

12.3 Calculation of percent recovery:

12.3.1 LCS and surrogates:

$$\%R = \frac{Amount\ found}{Amount\ spiked}\ x\,100$$

12.3.2 Matrix spikes:

$$\%\,\mathrm{R} = \frac{Amount\ in\ spiked\ sample - Amount\ in\ unspiked\ (native)\ sample}{Amount\ spiked}\ x\,100$$

12.4 Calculation of % RSD

$$\%\mathrm{RSD} = \left(\frac{Standard\ deviation}{\overline{\mathrm{X}}}\right) \times 100$$

12.5 Calculation of RPD

$$RPD = \frac{|Value\ 1\ -\ Value\ 2|}{\left(Value\ 1\ +\ Value\ 2\right)/2}\ x100$$

12.6 Calculation of %Difference (%D)

$$\%Diff = \frac{Value - \overline{Reference\ value}}{\overline{Reference\ value}} \times 100$$

12.7 Calibration factors for GC analysis are calculated by dividing the total peak area in the standard by the total mass injected (in nanograms).

$$Calibration\ Factor\ (CF) = \frac{Peak\ area}{Total\ mass\ injected}$$

12.7 Quantitation of Results

Positive results in samples are determined using the external standard technique. A processed GC file is obtained. The file contains the sum of the response of individual peaks in the gasoline fuel pattern within the elution of the first and last components in the standard. The mean CF from the initial calibration is used in the calculation.

The concentration of the gasoline is determined by the following formula:

$$\text{Conc. (mg/kg)} = \frac{\text{area } \mathbf{x} \text{ dilution } \mathbf{x} \text{ dry wt. factor}}{\text{CF } \mathbf{x} \text{ weight extracted (purged)}}$$

No area may be subtracted for the GRO retention time windows in calculating results except the area contributed by the surrogate. In that case, only the area of a surrogate peak "riding" the hydrocarbon envelope may be subtracted. Peak area measured from blanks may not be subtracted from sample area peaks.

12.7.1 Reporting Results for the 8015A modified/8015B/CA LUFT Method

Integration is performed using the flattest baseline possible from the beginning of the gasoline peak pattern to the end of the peak pattern. Refer to Quality Control SOP 13.18, “Manual Chromatographic Peak Integration Procedures” for guidance in performing manual integrations.

Report the presence of significant peaks that are in the gasoline range even if they do not match the standard peak pattern. This should be noted in the SDG narrative when it occurs.

12.7.2 Report the presence of significant peaks outside the chromatographic window. Peaks are significant if they can be distinguished above the

noise in a chromatogram. Any peak three times the standard deviation of the signal to noise ratio is statistically significant. All peaks (and baseline rises) outside the window are to be reported.

12.8 The daily retention time window is established using the 20 mg/L TN GRO standard by subtracting the 3SD value, determined from the 72 hour retention time study, from the elution time for 2-methylpentane, and adding the 3SD value to the elution time of 1,2,4-trimethylbenzene.

12.9 Calculating Dilutions

If a sample concentration exceeds the high level standard a dilution must be performed. Determine a level of dilution that will result in a value within the upper half of the calibration range. This is an acceptable dilution. A 10x dilution is performed using 100 µL sample plus 900 µL diluent for a total volume of 1 mL. It should be recorded on the run log as "10x ."

12.9.1 Dilution factor

$$Dilution\ factor = \frac{\mu L\ most\ conc.\ extract\ used\ to\ make\ dilution + \mu L\ clean\ solvent}{\mu L\ most\ conc.\ extract\ used\ to\ make\ dilution}$$

13.0 Method Performance

This method was validated through in-house laboratory studies of method detection limits (attachment 1) and precision and accuracy for single analyst (Attachment 5). The data are retained by the QA department.

14.0 Pollution Prevention

The solvents used in this procedure pose little threat to the environment when recycled and managed properly. Pollution prevention encompasses any technique that reduces or eliminates the quantity or toxicity of waste at the point of generation. Numerous opportunities for pollution prevention exist in laboratory operation. The EPA has established a preferred hierarchy of environmental management techniques that places pollution prevention as the management option of first choice. Whenever feasible, laboratory personnel should use pollution prevention techniques to address their waste generation. When wastes cannot be feasibly reduced at the source, the Agency recommends recycling as the next best thing.

15.0 Waste Management

It is the laboratory's responsibility to comply with all federal, state, and local regulations governing waste management, particularly the hazardous waste identification rules and land disposal restrictions, and to protect the air, water, and land by minimizing and controlling all releases from fume hoods and bench operations. Compliance with all sewage discharge permits and regulations is also required. See SOP 12.1, "Hazardous Waste Disposal", regarding laboratory procedures for recycling solvent waste streams.

Samples preserved with HCl, HNO_3, or H_2SO_4 to pH <2 are hazardous and must be handled as hazardous waste.

Refer to the Hazardous Waste Management and Safety SOPs located in the lab.

16.0 References

16.1 "Test Methods for Evaluating Solid Wastes: Physical/Chemical Methods", SW-846, 3rd Edition, Update III, 12/96, Methods 8015A modified, 8015B, 5030B and 5035A.

16.2 Leaking Underground Fuel Tank Field Manual: Guidelines for Site Assessment, Cleanup, and Underground Storage Tank Closure. State of California. Leaking Underground Fuel Tank Task Force. May 1988.

16.3 "Method for Determination of Gasoline Range Organics", TN DEC, March 1999

16.4 Standard Methods for the Examination of Water and Wastewater, 20th (1998) Edition, Method 1080

16.5 "Less is Better: Laboratory Chemical Management for Waste Reduction," American Chemical Society Department of Government Relations and Science Policy, 1155 16th Street, N.W., Washington DC, 20036, (202) 872-4477.

16.6 NELAC Standards, June 2003

16.7 QA-G6: Guidance for the Preparation of Standard Operating Procedures for Quality-Related Operations EPA/600/R-96/027, November 1995

16.8 CompuChem Quality Manual, Revision 7, Update 1, 12/13/05

17.0 Attachments as Tables, Diagrams, Flowcharts & Validation Data

17.1 Attachment 1 –Instrument Run Log

17.2 Attachment 2 – Standard Certificate of Analysis

Attachment 1

COMPUCHEM a division of Liberty Analytical Corp DATE ____/____/____INITIAL TIME OF TUNE_____ SHIFT/S(A)_____(B)_____(C)_____
GC VOLATILE RUN LOG TIME TUNE EXPIRES_____ LINKER /METHOD_____
COMPUCHEM LOGBOOK 11 G(4) 1 (GC68)
SEQUENCE ID: _____ PREVENTIVE MAINTENANCE_____

REJECTED	FILE NAME	REPORTED	DATE	TIME	CLIENT ID#	CASE/SDG#	AMOUNT INJECTED	CHEMIST	STANDARD AMOUNTS	COMMENTS(ETC.)	TEKMAR POSITION
			/ /								
			/ /								
			/ /								
			/ /								
			/ /								
			/ /								
			/ /								
			/ /								
			/ /								
			/ /								
			/ /								
			/ /								
			/ /								
			/ /								
			/ /								
			/ /								
			/ /								
			/ /								
			/ /								
			/ /								
			/ /								
			/ /								
			/ /								
			/ /								
			/ /								

STANDARDS

Std. ID	1,4-Dichlorobutune	GRO Std.	GRO NSI Std.
Lot #	_____	_____	_____

SUPERVISOR APPROVAL_____

DATE _____

The presence of the Chemist's employee ID number, or signature, on this run log attests that strict compliance with the method's SOP has occurred. Any SOP deviations require documentation by the responsible chemist together with the chemist's initials and the initials of the lab supervisor and a QA department representative, signifying approval of the deviation.

4/26/01:mlj

ORIGINAL MASTER COPY CONTROLLED COPY
If words above are not highlighted, this is an uncontrolled copy of this document.

Attachment 2

AccuStandard Inc.

125 Market Street
New Haven, CT 06513
USA

Ph: 203-786-5290
Fax: 203-786-5287
E-mail: usa@accustandard.com

CERTIFICATE OF ANALYSIS

PRODUCT: GRH-002S
DESCRIPTION: Gasoline Standard
LOT #: B2010289
SOLVENT: MeOH

EXPIRATION: On-going Stability Program

See reverse for additional certification information.

This product is guaranteed accurate to ± 0.5% of the Certified Analyte concentration through the Expiration Date on the Label.

Component	CAS #	Purity % (GC/MS)	Prepared Concentration[1] (µg/mL)	Certified Analyte Concentration[2] (µg/mL)
2-Methylpentane	107-83-5	100	1501	1501
2,2,4-Trimethylpentane	540-84-1	99.6	1500	1494
Heptane	142-82-5	100	500.8	500.8
Benzene	71-43-2	100	500.8	500.8
Toluene	108-88-3	100	1501	1501
Ethylbenzene	100-41-4	100	500.8	500.8
m-Xylene	108-38-3	99.7	1000	997
p-Xylene	106-42-3	100	1001	1001
o-Xylene	95-47-6	99.0	1001	991
1,2,4-Trimethylbenzene	95-63-6	97.1	1030 *	1000

10 Components

* Weight compensated to 100% purity

1. All weights are traceable through National Institute of Standards & Technology, Test No. 822/254480.
2. Certified Analyte Concentration = Purity x Prepared Concentration. The Uncertainty calculated for this product is the Combined Uncertainty $u_c(y)$. It represents an estimated standard deviation equal to the positive square root of the total variance of the uncertainty of components. The Expanded Uncertainty is U which is $U_c(y)$ *K where K is the coverage factor at the 95% confidence level (K=2). Values reported above are Expanded Combined Uncertainty.

Certified by: R. Cooper

This product was manufactured to meet the quality system requirements of ISO 9001

QR ORGANO 001
Rev. 9/98

CompuChem
A Division Of
Liberty Analytical Corp.

501 Madison Avenue
Cary, NC 27513

NELAP accredited

SOP DOCUMENTATION FORM

This form must accompany all new and revised Standard Operating Procedures (SOPs) when you turn them in to Quality Assurance for review. Please fill out the entire block below (except effective date).

This is a new procedure _____ revised procedure ✓ outdated procedure (archive) _____

- Procedure Code: IP 480B SOP Section #: 1.3.2.2 Revision #: 14

SOP Title: Analysis of Volatile Organic Compounds in Aqueous and Medium/High Concentration Soil Samples by SW-846

Effective date: (QA fills in) 04-05-2010

- Procedure prepared by: Bob McIver Date: 04-01-2010
- Procedure approved by: (If the manager prepared the SOP, a qualified second party should sign) [illegible] Date: 04-02-2010
- Reason for change: Address comments from SC DHEC SOP review plus changes from internal review
- This procedure meets the requirements of the following approved method references: SW-846 3rd Edition, Update III, 12/96, Method 8260B, Method 5030B, Method 5035

Procedure approved by a QA Representative (unless QA Representative signed above):

_____ Date: _____

On an annual basis: Lab managers are required to review lab practices and revise the SOP if necessary. If no revision is necessary, indicate by your signature that the SOP has been reviewed.

Annual Review—Signature: _____ Date: _____

Annual Review—Signature: _____ Date: _____

Annual Review—Signature: _____ Date: _____

Annual Review—Signature: _____ Date: _____

Instrument Procedure 480B: Analysis of Volatile Organic Compounds in Aqueous and Medium/High Concentration Soil Samples by SW-846

Table of Contents

SECTION	PAGE NO.
Section 1.0 – Scope and Application	2
Section 2.0 – Summary of Method	2-3
Section 3.0 – Definitions	3-4
Section 4.0 – Interferences	4-5
Section 5.0 – Safety	5
Section 6.0 – Equipment and Supplies	5-9
Section 7.0 – Reagents and Standards	9-14
Section 8.0 - Sample Preservation and Storage	**14-15**
Section 9.0 – Quality Control	**15-21**
Section 10.0 – Calibration and Standardization	21-26
Section 11.0 – Procedure	**27-32**
Section 12.0 – Data Analysis and Calculations	32-37
Section 13.0 – Method Performance	37
Section 14.0 – Pollution Prevention	**37-38**
Section 15.0 – Waste Management	**38**
Section 16.0 – References	**38-39**
Section 17.0 – Attachments as Tables, Diagrams, and Flowcharts	**39**
Attachment 1	40-42
Attachment 2	43-45
Attachment 3	46-47
Attachment 4	48
Attachment 5	49-54
Attachment 6	55-57

ORIGINAL MASTER COPY CONTROLLED COPY
If words above are not highlighted, this is an uncontrolled copy of this document.

Instrument Procedure 480B: Analysis of Volatile Organic Compounds in Aqueous and Medium/High Concentration Soil Samples by SW-846

1.0 Scope and Application

This is a general purpose method for the identification and simultaneous measurement of purgeable volatile organic compounds in a variety of aqueous matrices following SW-846 Method 8260B. It is also used to analyze medium to high level soil samples that have been extracted with methanol. The method is applicable to a wide range of organic compounds. It incorporates Method 5030B and Method 5035 (for medium/high concentration soil samples, extracted with methanol). Target compounds for this method, along with their associated internal standards and quantitation ions, are listed in Attachment 1. Note, however, that many of these compounds are not routinely analyzed.

The reporting limit is the low level calibration standard concentration. Reporting limits for this method are shown in Attachment 2.

Staff members performing the procedures described in this SOP are responsible for reading, understanding, and complying with the SOP requirements. Supervisors are responsible for directing the analyst to the controlled SOP, and providing adequate explanation of the material contained therein.

This procedure is restricted to use by or under the supervision of analysts experienced in the instrumentation or preparative methods and who have demonstrated the ability to generate acceptable results through QC samples and analyst capability studies.

2.0 Summary of Method

An inert gas (helium) is bubbled through a 5 mL or 25 mL aqueous sample spiked with internal standard and surrogate compounds. For medium/high level soil samples, an aliquot (typically 100 µL) of the methanol extract containing surrogates (See SOP 1.1.4.1) is added to 5 mL nitrogen-sparged reagent water. The sample is purged in a 40 mL VOA vial at ambient temperature, causing the purgeable volatile organic compounds to be transferred from the aqueous phase to the vapor phase. The vapor is swept onto a sorbent column where the purgeables are trapped. After purging is completed, the sorbent column is heated and back-flushed with the inert gas to desorb the purgeables onto a gas chromatograph (GC) wide-bore capillary column. The GC is temperature-programmed to separate the purgeables that are then detected with a mass spectrometer (MS). This SOP is NOT for use with Ohio VAP projects. Please see Ohio VAP specific SOP.

Note: For Method 8260B, a heated purge is also allowed.

3.0 Definitions

3.1 Method detection limit (MDL) – The minimum concentration of an analyte that can be measured and reported with 99% confidence that the analyte concentration is greater than zero and is determined from analysis of a sample in a given matrix containing the analyte (40 CFR, Part 136, Appendix B.)

3.2 Reporting Limit – The laboratory reporting limit is based on the lowest multipoint calibration standard concentration. For organic methods, values detected below the reporting limit and above the MDL may be reported and qualified as an estimated concentration.

If the low level standard concentration is not at least three times higher than the MDL value, the standard concentration is adjusted upward in order to achieve this minimal ratio. It may be adjusted higher than three times depending on the concentration range of the calibration curve and the ability to meet method linearity requirements.

3.3 Reporting Units – µg/L for water and µg/Kg for soil

3.4 A Sample Delivery Group (SDG) is defined by the following, whichever is more frequent:

- each 20 field samples received within a case, or
- each 7 calendar day period during which field samples in a case are received (14 calendar days if requested by the client) beginning with the receipt of the first sample.

NOTE: The DOD-QSM and South Carolina Department of Health and Environmental Control (SC DHEC) do not accept the SDG approach, unless the samples are prepared in a single batch. When a group of up to 20 field samples of a similar matrix are prepared as one batch, method-specified QC samples such as a method blank, laboratory control sample, matrix spike, matrix spike duplicate, and matrix duplicate must also be prepared together. If samples are batched together from different sites, project-specific QC must be processed.

3.5 SC DHEC – South Carolina Department of Health and Environmental Control

3.6 DOD-QSM – Department of Defense Quality Systems Manual

3.7 Marginal Exceedance – Beyond the LCS control limit but within the marginal exceedance limits (set at 4 standard deviations around the mean). This outside boundary prevents a grossly out-of-control LCS from passing.

4.0 Interferences

4.1 Impurities in the purge gas or methanol, organic compounds out-gassing from the plumbing ahead of the trap, and solvent vapors in the laboratory account for the majority of contamination problems. Gas lines from the gas tanks to the instrument must be either stainless steel or copper tubing. Non-polytetrafluoroethylene (PTFE) thread sealants, or flow controllers with rubber components are not to be used. When potential interfering peaks are noted in laboratory method blanks, it may be necessary to reduce solvent contamination in the laboratory, purge the methanol used to prepare standard solutions, purge the DI water with helium or nitrogen, change the purge gas source, or regenerate the molecular sieve purge gas filter.

4.2 Samples can be contaminated by diffusion of purgeable organics (particularly methylene chloride, fluorocarbons, and other common laboratory solvents) through the septum seal into the sample during storage and handling. Therefore, these samples are stored in GC/MS VOA laboratory refrigerators; separate from laboratory standards, and they must be analyzed in a room in which the atmosphere is demonstrated to be free of all potential contaminants that will interfere with the analysis. Because methylene chloride will permeate PTFE tubing, all GC carrier gas lines and purge gas plumbing are to be constructed from stainless steel or copper tubing.

4.3 Contamination by carryover can occur whenever a sample is analyzed after a sample that contains high levels of organic compounds. Whenever an unusually concentrated sample is encountered, it must either be followed by analysis of an instrument blank or the next sample must be closely monitored to check for cross-contamination. For samples containing large amounts of water soluble materials, suspended solids, high boiling compounds, or high purgeable levels, it may be necessary to clean the purge and trap apparatus. Do so by purging a 10-20% methanol solution, followed by baking the purge and trap apparatus and the analysis of a DI water blank to confirm that the system is free from contamination. The trap and other parts of the system are also subject to contamination; therefore, frequent bake out and purging of the entire system may be required.

4.4 Instrument Problems/Preventative Maintenance

Instrument problems may interfere with the analysis. If a low response is observed for the early eluting compounds such as the gases, replacement of the trap or septum may be necessary. In addition, adjustments to the purge flow may be necessary to achieve a desired response for these compounds. If such adjustments do not help, it may be necessary to check the fittings on the purge and trap device and on the column for leaks. This is done with a helium leak detector and certain software utility programs. Column maintenance or replacement may be necessary if peak tailing or broad chromatographic peaks are observed.

5.0 Safety

5.1 The toxicity and carcinogenicity of many chemicals used in this method have not been precisely determined. Each chemical should be treated as a potential health hazard. Exposure to these chemicals should be minimized. Preparation of calibration standards, blanks, and samples is performed in a fume hood to minimize risk.

5.2 The following method analytes have been tentatively classified as known or suspected human or mammalian carcinogens: benzene, carbon tetrachloride, 1,2- dichloroethane, 1,1,2,2-tetrachloroethane, 1,1,2- trichloroethane, chloroform, 1,2-dibromoethane, trichloroethene, and vinyl chloride.

5.3 Appropriate protective equipment and clothing must be used under the assumption that all samples are potentially hazardous. During sample preparation, safety glasses, gloves and lab coats are a minimum requirement. The persistent presence of noxious odors may be indicative of failure of the laboratory ventilation system and must be reported to a supervisor or manager.

5.4 Laboratory staff members are required to review the Chemical Hygiene Plan for general safety policies, and Material Safety Data Sheets (MSDS) for solvents and reagents used in the laboratory. The MSDS are located in the Quality Assurance department.

6.0 Equipment and Supplies

6.1 Syringes

6.1.1 1 mL Hamilton syringe

6.1.2 500 µL Hamilton syringe

6.1.3 100 µL Hamilton syringe

6.1.4 50 µL Hamilton syringe

6.1.5 25 µL Hamilton syringe

6.2 Volumetric Flasks and Pipets

6.2.1 Assorted volumetric flasks ranging from 50 mL to 1000 mL

6.2.2 10 mL graduated pipette in 1/10 mL graduations

6.2.3 One mL mininert vials

6.3 Vials

6.3.1 40 mL screw-top, PTFE-lined, septum-sealed vials, with and without magnetic stirring bars

6.4 Analytical Column

6.4.1 Supelco SPB-624 60-m, 0.32mm ID with 1.8 um film thickness

6.4.2 Descriptions of alternative capillary columns are presented in EPA CLP SOW documents. Columns other than those listed may be used if equivalency is demonstrated. Specifications for equivalency are also presented in the SOW documents. The equivalency documentation must be maintained and made available during on-site audits

6.5 Purge and trap Autosampler System

6.5.1 Tekmar LSC

6.5.1.1 Tekmar, LSC 3000, LCS 3100 and Velocity XPT with glass frit bottom liquid sample purging vessel and Luerlock valve

6.5.1.2 The absorption trap must be at least 25 cm long and have an internal diameter of at least 0.105 inches (0.2667 cm).

6.5.1.3 The Supelco K (VOCARB 3000) trap consists of the following:

- Carbopack B, 10 cm

- Carboxen-1000, 6 cm
- Carboxen-1001, 1 cm

6.5.1.4 Alternate sorbent traps may be used if they meet the QC acceptance criteria. Performance documentation must be maintained and made available during an on-site audit.

6.5.2 Archon ALS

6.5.2.1 The Archon Model 5100, 4552 Purge and trap autosampler, interfaces directly to a Tekmar Purge and Trap Concentrators.

6.5.2.2 The autosampler is designed for soil samples and utilizes 40 **mL** VOA vials with low bleed Teflon septa.

6.5.2.3 The Archon ALS has the capacity of up to 51 vials.

6.5.3 Purge and Trap Analysis

6.5.3.1 After preparation, load each standard, blank, and sample onto the closed-system autosampler interfaced with the purge-and-trap apparatus.

6.5.3.2 Purge for 11 minutes at 40 ºC.

6.5.3.3 Heat the trap to 180 ^{o}C and desorb the trapped contents onto the GC column by back flushing the trap with inert gas for 4.0 (± 0.1) minutes.

6.5.3.4 Bake the trap for 7.0 (± 0.1) minutes at 220 to 260 ^{o}C.

6.6 Gas Chromatograph / Mass spectrometer

6.6.1 Hewlett Packard 5890 Series

6.6.2 Hewlett Packard 6890 Series

6.6.3 Agilent 6890N Series

6.6.4 Hewlett Packard 5972 Mass Selective Detector (MSD)

6.6.5 Hewlett Packard 5973 MSD

6.6.6 Hewlett Packard 6890MSD

6.6.7 Agilent Technologies 5975 MSD

6.7 HP/ Agilent GC conditions listed below:

- Column: 30m
- Carrier Gas: Helium
- GC mode: Capillary
- Injection Port Temperature: 230°C
- Interface Temperature: 230°C
- Initial Temperature: 40° C
- Final Temperature: 225° C
- Flow Rate: 35ml/minute

The listed column flow rate is approximate. The flow rate is adjusted to optimize the linear velocity of an un-retained compound (butane) through the column. The optimum linear velocity for a SPB-624 column is 30 - 45 cm/second.

6.8. Temperature Program

These temperature program conditions are provided as an example and may vary.

- HP/Agilent: 40 °C for 4.50 minute
- Ramp: 40 °C – 100 °C @ 20 °C/minute
- Ramp: 100 °C – 150 °C @ 25 °C/minute
- Ramp: 150 °C – 225 °C @ 33 °C/minute

6.**9** Interface (GC to mass spectrometer)

6.9.1 Direct capillary interface at 225° C is used for Hewlett Packard MSDs.

6.10 Data system

6.10.1 The Hewlett Packard GC/MS systems utilize ChemServer software, for data acquisition.

6.10.2 For data processing, CompuChem uses the Hewlett Packard HP 9000 series 735 Unix Workstation employing Target3 and Envision software by Thru-Put Systems.

6.10.3 The reference library used is the NIST Library (NIST129K.1), G1033A version D.0500 purchased from Quantum Analytics Inc.

6.11 Data storage

Data are stored on the Target3 Unix Workstation. The Workstation is backed up incrementally on a daily basis.

7.0 Reagents and Standards

All standards are prepared in the Volatile Organic Laboratory. Stock Standards are stored separately from samples in Teflon- sealed screw-cap bottles with zero headspace at -10 to -20 ^{o}C in the freezer units in the instrument laboratory when not in use. Protect the standards from light. Standards for gases usually need to be replaced after one week or as recommended by the manufacturer, unless the acceptability of the standard can be documented. Standards for the non-gases must be monitored and fresh standards prepared if a 20% drift is experienced. These standards need to be replaced after six months or as recommended by the manufacturer, unless the acceptability of the standard can be documented. 2-chloroethyl vinyl ether (CEVE) and styrene may have to be prepared more frequently. Secondary dilutions of Stock Standards must be checked frequently for signs of degradation or evaporation, especially just prior to their use in preparing the working calibration standards. Working standards must be prepared just prior to analysis unless they are to be purged by an autosampler. When an autosampler is used, the standards may be kept up to 12 hours in purge vessels connected via the autosampler to the purge and trap device.

Note: Detailed standard preparation information may be found in the Standard Preparation Logbook 11D(4), "GCMS VOA Standard Preparation Logbook", located in the Volatile Laboratory.

Note: All standards and reagents are subject to change in vendor and in concentration. The Reporting Limits are also subject to change, but must remain at or above the lowest point in the calibration

7.1 Reagent Water-All water used in this procedure must be equivalent to ASTM Type II water (as it relates to specific conductance and specific resistance) which is subsequently purged with an inert gas and demonstrated to meet the blank contamination acceptance criteria contained in this Standard Operating Procedure (SOP). It is referred to throughout the remainder of this SOP as DI water.

7.2 Methanol (B&J Scientific, purge and trap grade)

7.3 Tuning Standard

7.3.1 4-Bromofluorobenzene - Standard ID# 7008 at 25 µg/mL. 2 µL yielding 50 ηg on column, are injected onto the column every 12 hours.

7.3.1.1 Prepare the standard by adding 50 µL Restek VOA Tuning Mix 5000 µg/mL) to an amount of purge and trap grade methanol in a 10 mL volumetric flask and bring to volume.

7.4.1.2 Prepare this standard monthly.

7.4 Calibration Standards

7.4.1 For the initial calibration, the internal standard solution is added automatically by the Archon Purge and Trap Autosampler. For all subsequent analyses, both the internal standard and the surrogate solutions are added automatically by the Archon autosampler.

Standard Preparation Table 2

Std. ID TCL4-High	005 µg/L	010 µg/L	020 µg/L	050* µg/L	100 µg/L	200 µg/L
8260 I.S.	5.0 µL	5.0 µL	5.0 µL	5.0 µL	5.0 µL	5.0 µL
8260 S.S.	1.0 µL	2.0 µL	5.0 µL	10.0 µL	15.0 µL	20.0 µL
TCL4-1&2	1.0 µL	2.0 µL	4.0 µL	10.0 µL	20.0 µL	40.0 µL
TCL4-gases	1.0 µL	2.0 µL	4.0 µL	10.0 µL	20.0 µL	40.0 µL
TCL4-ketones	1.0 µL	2.0 µL	4.0 µL	10.0 µL	20.0 µL	40.0 µL
TCL4-AppIX	1.0 µL	2.0 µL	4.0 µL	10.0 µL	20.0 µL	40.0 µL

* Continuing Calibration level

7.4.1.1 To prepare the standards at the concentrations shown in the column headers of the preceding table, add the µL amount of standard shown to a 100 mL volumetric flask containing nitrogen sparged DI water, then bring up to volume.

Alternatively, the standards may be prepared at the above concentrations by diluting the 200 µg/L standard directly into the purge and trap impingers. Dilute as follows:

- For a 100 µg/L standard, add 2.5 mL to 5 mL DI water;
- For a 50 µg/L standard, add 1.25 mL to 5 mL DI water;
- For a 20 µg/L standard, add 0.50 mL to 5 mL DI water;

- For a 10 µg/L standard, add 0.25 mL to 5 mL DI water;
- For a 5 µg/L standard, add 0.125 mL to 5 mL DI water.

For a 25 mL purge analysis, increase both volumes by a factor of 5 when preparing standards by making dilutions.

Note: For samples submitted to meet the regulatory requirements of the State of South Carolina, this initial calibration curve must include a standard at 2 µg/L.

7.4.1.2 The concentration of the compounds in the TCL4-1 & 2 High standard is 500 µg/mL. See Attachment 5 for the composition of this standard.

7.4.1.2.1 Prepare the standard by adding 1.25mL Restek 502.2 VOA 2000 MegaMix (2000 µg/mL) to an amount of purge and trap grade methanol in a 5 mL volumetric flask and bring to volume.

7.4.1.2.2 Prepare this standard every three months.

7.4.1.3 The concentration of the compounds in the TCL4-gases High standard is 500 µg/mL. See Attachment 5 for the composition of this standard.

7.4.1.3.1 Prepare each standard by adding 1.25 mL Restek 502.2 Calibration Mix #1 (2000 µg/mL) to an amount of purge and trap grade methanol in a 5 mL volumetric flask and bring to volume.

7.4.1.3.2 The method states that this standard usually needs to be replaced weekly, unless the standard manufacturer recommends otherwise, or unless the acceptability of the standard can be documented. This standard has generally proven to be more stable in the laboratory. The gas standard can be used for longer than a week if the gases in the continuing calibration (CCV) standard meet the CCV requirements when compared to the initial calibration standards that contain a gas standard that has been prepared within a one week holding time. Prepare this standard monthly, or more frequently as need dictates, or when degradation is evident rendering the standard unacceptable.

7.4.1.4 The concentration**s** of the compounds in the TCL4-ketones standard **are** 500 µg/mL, 1250 µg/mL, or 5000 µg/mL. See Attachment 5 for the composition of this standard.

7.4.1.4.1 Prepare the standard by transferring AccuStandard custom VOA Mix #2 to a mininert vial.

7.4.1.4.2 Replenish this standard as needed and replace every three months.

7.4.1.5 The concentration**s** of the compounds in the TCL4-AppIX standard **are** 500 µg/mL, 5000 µg/mL, or 25000 µg/mL. See Attachment 5 for the composition of this standard.

7.4.1.5.1 Prepare the standard by transferring AccuStandard custom VOA Mix #1 to a mininert vial.

7.4.1.5.2 Replenish this standard as needed and replace every three months.

7.5 Initial Calibration Verification

7.5.1 The initial calibration curve must be verified using a standard from an independent source. The laboratory purchases the initial calibration verification (ICV) standard from a different vendor than the one used for the calibration standards. This is prepared in the same manner as described above.

7.5.2 The ICV contains the full list of target analytes at the same concentration as the continuing calibration verification (CCV) standard.

7.6 Internal Standards

Compounds in 8260 I.S. (Internal standard) at a concentration of 50 µg/ml (250 ug/ml for the Archon)

- **Fluorobenzene**
- D5-chlorobenzene
- D4-1,4-dichlorobenzene

7.6.1 Prepare the internal standard spiking solution by adding 0.2 **mL** Restek 8260A ampulated internal standard mix (2500 µg/**L** to an amount of purge and trap grade methanol in a 10 ml volumetric flask and bring to volume.

7.6.2 Prepare this standard every three months.

7.7 Surrogate Standard

Compounds in 8260 S.S. (Surrogate Standard) at a concentration of 50 µg/**mL** (250 µg/**mL** for the Archon)

- **Dibromofluoromethane**
- D4-1,2-dichloroethane
- D8-toluene
- 4-bromofluorobenzene

7.7.1 Prepare the surrogate spiking solution by adding 0.2 **mL** Restek 8260A ampulated surrogate mix (2500 µg/m**L**l) to an amount of purge and trap grade methanol in a 10 **mL** volumetric flask and bring to volume.

7.7.2 Prepare this standard every three months.

7.8 Spike Standard

Compounds in 8260 Spiking Mixture (1001C) at a concentration of 25 µg/mL

- 1,1-dichloroethene
- **Trichloroethene**
- **Benzene**
- **Toluene**
- **Chlorobenzene**

Note**:** The spiking cocktail is project dependent. This spiking mixture can also be used as a Laboratory Control Sample (LCS) spike. Some projects may require full analyte spike, and in that case, the standard used for the full analyte spike LCS is the ICV. For some programs, the CCV may be used in the place of the LCS.

7.8.1 Prepare this standard by adding 100 µ**L** Restek VOA Matrix Spike Mix to an amount of purge and trap grade methanol in a 10 m**L** volumetric flask and bring to volume.

7.8.2 Prepare this standard every six months.

7.9 Standard Storage

7.9.1 Store the stock standards in Teflon- sealed screw-cap bottles with zero headspace at -10 °C to -20 °C. Protect the standards from light. Standards for gases usually need to be replaced after one week or as recommended by the manufacturer, unless the acceptability of the standard can be documented. Standards for the non-gases should be monitored and fresh standards prepared if a 20% drift is experienced. These standards need to be replaced after six months or as recommended by the manufacturer, unless the acceptability of the standard can be documented. CEVE and styrene may have to be prepared more frequently.

7.9.2 Store secondary dilution standards in Teflon®-sealed screw-cap bottles with minimal headspace at -10 °C to -20 °C. Protect the standards from light. The secondary dilution standards must be checked frequently for signs of degradation or evaporation, especially just prior to their use in preparing the working calibration standards.

7.9.3 Aqueous working standards must be prepared just prior to analysis unless they are to be purged by an autosampler. When an autosampler is used, the standards may be kept up to 12 hours in purge vessels connected via the autosampler to the purge and trap device. If premixed certified solutions are used store according to manufacturer's documented holding time and storage temperature recommendations.

7.9.4 Purgeable standards are stored in GC/MS VOA Freezer #1, separate from other standards and samples.

8.0 <u>Sample Preservation and Storage</u>

8.1 Samples are preserved and stored according to the tables in Sample Control SOPs 4.1, “Receiving Samples” and 4.6, “Storing Samples.” Sample holding times are also listed.

8.1.1 Note that if 2-chloroethyl vinyl ether (CEVE) is a target compound of interest for the project, an unpreserved sample must be analyzed within 7 days of collection.

8.2 All samples must be analyzed within 14 days of collection.

8.3 Prior to analysis, all samples must be stored under refrigeration at 2 – 6 °C in the reach-in storage unit in the laboratory. After analysis, samples are returned to Sample Control for long-term storage and disposal.

9.0 Quality Control

9.1 Surrogates

9.1.1 All field and QC samples are spiked with the surrogate standard. Surrogates are used to assess the efficiency of the analytical system.

9.1.2 Surrogate compounds must meet the following percent recovery criteria.

Surrogate Compound	**Aqueous and Med./High Conc. Soil**	**Aqueous**
	5 mL purge	**25 mL purge**
Dibromofluorobenzene	66-128; 71-141	65-150
1,2-Dichloroethane-d_4	55-147; 70-139	59-150
Toluene-d_8	50-150; 72-123	61-145
4-bromofluorobenzene	70-132; 65-131	63-143

9.1.2.1 The same surrogates and recovery criteria are to be used for samples submitted to meet the regulatory requirements of the State of South Carolina.

The following table contains the surrogate recovery limits required by the DOD-QSM.

Surrogate Compound	Aqueous	Solid
Dibromofluorobenzene	85-115	N/A
1,2-Dichloroethane-d_4	70-120	N/A
Toluene-d_8	85-120	85-115
4-Bromofluorobenzene	75-120	85-120

9.1.3 Samples with surrogate recovery failures must be reanalyzed to confirm a matrix effect. Surrogate recovery failures in method blanks and LCS require reanalysis of the entire batch. Similar surrogate failures in the MS/MSD and original sample confirm a matrix effect and do not require reanalysis.

9.2 Internal Standards

9.2.1 The integrated areas of the quantitation ions of the internal standards are monitored in continuing calibration verification checks, samples, and QC for a change in retention time and response or sensitivity. These should remain reasonably constant over time.

9.2.1.1 Internal standard retention time and area responses must be assessed in each continuing calibration verification standard by comparison to the corresponding internal standard in the most recent initial calibration mid-point standard. Internal standard responses in samples and QC are compared to the most recent continuing calibration verification.

9.2.2 The area responses of the internal standards must be within 50-200% difference of the area responses compared to.

9.2.3 The retention time shift for the internal standards must be less than 30 seconds.

9.2.4 If any of these criteria cannot be met, the analytical system must be checked for malfunctions and corrections made. Re-analysis of any affected sample is required.

9.3 Method/Instrument Blanks

9.3.1 Before any samples are analyzed, it must be demonstrated through a laboratory reagent blank that the system is free of contamination that would prevent the determination of any analyte of concern. Sources of background contamination are glassware, purge gas, sorbents, and equipment. Background contamination must be reduced to an acceptable level before proceeding with the next analysis. In general, background contamination from method analytes should be below the reporting limit.

9.3.2 All blanks must be analyzed on a GC/MS system meeting the BFB, initial calibration, and continuing calibration verification acceptance criteria.

9.3.3 A method blank is analyzed with each batch of up to 20 samples processed as a group within a 12-hour tune. If more than 20 samples are analyzed in a tune batch, a second method blank is required. Method blanks must be analyzed immediately following a valid continuing calibration verification analysis

9.3.4 The concentration of the target compounds in the blank must be less than the reporting limit for each target compound, with the exception of the common laboratory contaminants acetone, 2-butanone, and methylene chloride, which must be <2X the reporting limit..

9.3.4.1 The DOD-QSM requires that the target compounds in the blank must be at a concentration of <½ the reporting limit and < the reporting limit for lab contaminants.

9.3.4.2 The SC DHEC requires that all compounds in the blank be less that the reporting limits except for the **common laboratory contaminants**, which must be <2X the reporting limit.

9.3.5 All samples processed within the same 12-hour tune with a method blank that does not meet the blank technical acceptance criteria must be reanalyzed. The chromatographic system must be inspected for malfunctions, and corrections must be made as required before more samples are analyzed.

9.4 Laboratory Control Sample

9.4.1 A laboratory control sample (LCS) is prepared and analyzed with each tune batch of up to 20 samples. The LCS and matrix spikes are spiked with the same target analytes. The LCS is spiked at the same concentration as the matrix spike. The LCS is spiked with all compounds of interest in the project.

9.4.2 The percent recovery criteria, developed from in-house statistical data, for the analytes in the full LCS are listed in Attachment 3.

9.4.2.1 The LCS control limits required by the DOD-QSM are listed in Attachment 6 along with the marginal exceedances.

9.4.2.2 The following table presents the DOD-QSM and 2003 NELAC Standards allowed number of marginal exceedances governed by the number of compounds spiked into the LCS.

Number of analytes in	Allowed number of

the LCS	Marginal Exceedances
> 90	5
71-90	4
51-70	3
31-50	2
11-30	1
< 11	0

The LCS fails if the more than the allowed number of marginal exceedances occur or if a spike recovery is outside of the marginal exceedance limits. The SC DHEC does not allow for marginal exceedances

9.4.3. Gases and known poor purging compounds

- gases: bromomethane
  chloromethane
  chloroethane
  vinyl chloride
  dichlorodifluoromethane
  trichlorofluoromethane
- acetone
- 2-butanone
- carbon disulfide
- crotonaldehyde
- 1,2-dibromo-3-chloropropane
- 1,4-dioxane
- isobutyl alcohol
- 2-hexanone
- 4-methyl-2-pentanone
- vinyl acetate

9.4.4 For SC DHEC, an expanded subset of analytes, representative of the compounds being reported, is employed and all analytes must have recovery limits within 70-130%. The analytes are:

- vinyl chloride
- 1,1-dichloroethene
- methylene chloride
- 1,1-dichloroethane
- cis-1,2-dichloroethene
- 2-butanone
- carbon tetrachloride

- benzene
- trichloroethene
- 1,2-dichloropropane
- bromodichloromethane
- tetrachloroethene
- chlorobenzene
- ethylbenzene
- styrene
- bromoform
- 1,4-dichlorobenzene

9.4.5 When the LCS fails to meet the acceptance criteria, the entire batch associated with it must be re-prepared and reanalyzed.

9.5 Matrix Spikes

9.5.1 A matrix spike and matrix spike duplicate (MS/MSD) are prepared and analyzed with every SDG.

9.5.2 Matrix spikes have the following advisory recovery criteria:

Spike Compound	**Aqueous & med./high conc. soil % Recovery**
1,1-dichloroethene	61-145; 59-172
Trichloroethene	71-120; 62-137
Benzene	76-127; 66-142
Toluene	76-125; 59-132
Chlorobenzene	75-130; 78-122
All others	50-150

9.5.3 Matrix spikes have the following advisory relative percent difference (RPD) criteria as shown in the following table.

Spike Compound	Aqueous & med./high conc. soil % RPD
1,1-dichloroethene	14; 22
Trichloroethene	14; 24
Benzene	11; 21
Toluene	13; 21
Chlorobenzene	13; 21
All others	25

9.5.4 Most spike compounds should meet these criteria. If the criteria are not met in the MS/MSD but are met in the LCS, the results may be reported with the failures attributed to the matrix of the sample. If the LCS does not meet criteria, then all will have to be repeated as discussed above.

9.5.5 To meet the requirements of the DOD-QSM, the duplicate matrix spikes should meet the LCS control limits listed in Attachment 6. The RPD between the duplicate matrix spikes should be ≤ 30%.

9.5.5.1 If the duplicate matrix spikes fail DOD-QSM acceptance criteria, contact the client for guidance.

9.5.5.2 If the original sample results are associated with failing duplicate matrix spikes, qualify the results in the narrative as estimated concentrations. Refer to the DOD-QSM "J" flag.

9.6 Initial Calibration Verification

9.6.1 A second source initial calibration verification (ICV) standard is run after the initial calibration standards have met criteria.

9.6.2 The ICV must be within 20% of its expected value for each target analyte and surrogate or within 40% for the poor purgers and the gases. Sporadic failure of up to three target compounds is allowed but they must not exceed 40% of their expected value; gases and poor purgers are listed above.

9.6.2.1 To meet the requirements for the DOD-QSM, the ICV must be ≤ 25% of its expected value for each target analyte.

9.6.3 If the ICV fails to meet the criteria in 9.6.2 or 9.6.2.1, take corrective action and reanalyze the standard. If the ICV fails again, repeat the initial calibration.

9.7 MDL Studies

9.7.1 On an annual basis and after major maintenance, a method detection limit (MDL) study is performed on at least one instrument per method and matrix. When multiple instruments are used, individual instrument MDL studies may be replaced by the analysis of an MDL check sample. The MDL check sample must be analyzed on all instruments, to demonstrate equivalent sensitivity.

9.7.1.1 The DOD-QSM requires that the MDL check sample be prepared at about 2x the MDL and is analyzed on a quarterly basis for each matrix. A response must be detected in the 2x MDL check sample. Additionally, qualifying ions of 50% or higher must also be present. For more information on MDL studies, refer to QC SOP 13.11, "Performing Annual Method Detection Limit (MDL) Studies."

9.8 Contingency

9.8.1 If due to a lab accident or to QC failures, a re-preparation and analysis are required for the sample and insufficient sample volume remains, the Project Manager must be alerted and will contact the client for direction on how to proceed.

9.8.2 If persistent contamination occurs in the laboratory, analysis must be halted until the source of the contamination can be identified and isolated. When the contamination issue is resolved, samples analysis may proceed.

9.8.3 Refer to the corresponding Data Review SOP (number will vary among sections) for information on how to handle reporting of data that are unacceptable or out-of-control.

9.8.4 Any other issues that potentially effect data quality should also be addressed with the Project Manager.

10.0 <u>Calibration & Standardization</u>

10.1 BFB Tuning

10.1.1 The analysis of the instrument performance check solution is performed by injecting 50 ηg of BFB (2 µL STD ID#7008) into the GC using a 10 µL Hamilton syringe. BFB may be analyzed simultaneously with a continuing calibration verification standard as long as all QC criteria are met.

10.1.2 The peak selection criteria for BFB analysis are as follows (in order of performance):

10.1.2.1 Average one scan prior to the apex of the BFB peak to one scan after the apex, subtracting a single background scan prior to the peak, but no more than 20 scans prior to the elution of BFB. Also, do not subtract part of the BFB peak.

10.1.2.2 Choose the apex of the BFB peak only and include background subtraction.

Note: Background subtraction is performed to eliminate interference and when performed, the subtracted scan must be no more than 20 scans prior to the elution of the BFB and no scans within the BFB peak may be subtracted.

10.1.2.3 Choose a single scan or a range of scans within the BFB peak and include background subtraction.

10.1.3 The analysis of the instrument performance check solution must meet the ion abundance criteria given in the following table.

BFB Key Ions and Ion Abundance Criteria

Mass	Ion Abundance Criteria
50	15-40% of m/z 95
75	30-60% of m/z 95
95	Base Peak; 100% relative abundance
96	5-9% of m/z 95
173	<2% of m/z 174
174	>50% of m/z 95
175	5-9% of m/z 174
176	>95% but less than 101% of m/z 174
177	5-9% of m/z 176

10.1.4 BFB technical acceptance criteria must be met before any standards, samples, or required blanks are analyzed. Tune criteria must be met 12 hours. GC/MS tuning and Mass Calibration forms must be printed and attached to the instrument run log page for each tune. The relative abundance for each ion is calculated to two decimal places.

10.1.5 If BFB technical acceptance criteria are not met, retune the GC/MS system. It may also be necessary to clean the ion source, clean the quadrupole rods, or take other corrective action to achieve the technical acceptance criteria.

10.2 Initial Calibration

10.2.1 Prior to the analysis of samples and required blanks, and after the instrument performance check solution (BFB) criteria have been met, each GC/MS system must be calibrated at six concentrations to demonstrate instrument sensitivity and the linearity of responses for the purgeable target compounds.

10.2.2 Prepare standards according to the Initial Calibration Standard Preparation Table 2 in Section 7.4. All initial calibration standards must be analyzed at the concentration levels and frequency described in this SOP on a GC/MS system that meets the BFB technical acceptance criteria.

10.2.3 The area response of the characteristic ions in the extracted ion current profile (EICP) is tabulated against the concentration for each compound and internal standard. Relative response factors (RRF) are calculated for each compound.

10.2.4 Minimum relative response factors for the System Performance Check Compounds (SPCC) must be met and are listed in the following table.

Relative Response Factor Criteria for SPCCs

Volatile Compound	**Minimum RRF**
Chloromethane	0.10
1,1-dichloroethane	0.10
Chlorobenzene	0.30
Bromoform	0.10
1,1,2,2-tetrachloroethane	0.30

10.2.5 The following Calibration Check Compounds (CCC) have maximum % RSD criteria of ≤ 30%.

- 1,1-dichloroethene
- chloroform
- 1,2-dichloropropane
- toluene
- ethylbenzene
- vinyl chloride

10.2.5.1 The remaining compounds must have an RSD of ≤ 15%. If the % RSD is 15% or less, the average relative response factor may be used for quantitation. If the % RSD is greater than 15% then an alternate method for quantitation, such as a linear calibration using least squares regression or quadratic fit, may be used. When one of these options is used, the line must not be forced through the origin. The SC DHEC does not allow the use of a quadratic regression for any methods that have previously shown linearity.

If the linear or quadratic regression fit is used, the correlation coefficient must be ≥ 0.990. These alternate methods of quantitation are available in the ThruPut system.

Note: The DOD-QSM requires that the linear least squares regression correlation coefficient must be ≥ 0.995 and does not allow the used of quadratic fit.

Note: If quadratic regression is used the compound must historically exhibit a nonlinear response.

10.2.5.2 If the initial calibration does not meet the criteria above, corrective action is necessary.

- Check the instrument operating conditions and perform maintenance as necessary. It may be necessary to clean the ion source, perform column maintenance, change the column, service the purge and trap device, or take other corrective action to achieve the technical acceptance criteria.

- Compare responses for the analyte in each of the standard levels to verify that a single standard analysis is not

presenting results significantly higher or lower then the other standard analyses, as this would indicate that the standard solution was prepared in error. If that is the case, re-prepare and reanalyze the standard.

10.2.6 The initial calibration may still be acceptable when some analytes exceed the 15% RSD criteria, if the following conditions are met and allowed by the client:

- The mean of all %RSD values for the analytes (grand mean) is less than or equal to 15%.
- All analytes in the calibration standard must be included in the calculation.
- Non-CCC target compounds have a warning limit of 50% RSD and an action limit of 90% RSD when the "grand mean" approach is used. These limits have been inserted as default values into the data reduction software program. This is based strictly on established U.S. EPA data validation guidelines where values greater than 90% RSD result in rejection of data.

10.2.6.1 A summary of the initial calibration data and/or a list of the analytes not meeting the 15% RSD criteria with their actual %RSD must be included as a deliverable to our client. If the conditions in 10.2.6 are met, then the average relative response factor may be used to determine the concentration of analytes in samples.

Note: For samples submitted to meet the regulatory requirements of the State of South Carolina and the DOD-QSM, the grand mean option is not allowed.

10.2.7 The initial calibration verification must be analyzed after each initial calibration and must meet the acceptance criteria. If the ICV fails, then a new initial calibration curve must be generated.

10.3 Continuing Calibration Verification

10.3.1 Before the analysis of samples and blanks, but after BFB and initial calibration acceptance criteria have been met, each GC/MS system must be routinely checked by analyzing a continuing calibration verification standard. This standard must contain all purgeable target analytes and

surrogate compounds. It is used to ensure that the instrument meets the sensitivity and linearity requirements of the method throughout the analytical sequence.

10.3.2 A check of the calibration curve must be performed once every 12 hours, beginning with the injection of BFB. A percent difference of the response for each compound compared to the mean relative response factor from the initial calibration is calculated when performing the average response factor model.

10.3.3 The calculated percent difference must be less than or equal to 20% (%D) for the CCCs listed above in Section 10.2.5. Minimum response factor criteria for the continuing calibration verification standard are also shown in Section 10.2.4.

10.3.3.1 If a regression fit model was used for analytes in the initial calibration, the continuing calibration verification is performed using percent drift (difference) for the CCCs.

10.3.4 As indicated for the initial calibration acceptance criteria, for the continuing calibration verification, the remaining target analytes (non-CCC compounds) do not have defined % difference criteria. We have established a warning limit of 50%D and an action limit of 90%D. These values have been inserted as defaults into the data reduction software program. This is based strictly on established U.S. EPA data validation guidelines where values greater than 90% RSD result in rejection of data.

10.3.4.1 For samples submitted to meet the regulatory requirements of the State of South Carolina, **all non-CCC target analytes must be within 30% acceptance criteria, with the exception of the poor purgers listed in Section 9.4.3. The poor purgers should fall within 40% acceptance criteria.**

10.3.5 If continuing calibration verification acceptance criteria cannot be met after inspection and normal maintenance, a new initial calibration will have to be performed.

Note: Method 8260B indicates that if the CCCs are not required analytes, then all required analytes, must meet the 20% difference criterion. Our typical analysis includes all of the CCCs.

11.0 Procedure

Documentation must follow the requirements in QC SOP **13.6**: **"**Proper Documentation Procedures**"**. All injections must be recorded on the instrument run log (Attachment 4) along with the date, time (use a 24 hour clock), the volume injected, operator ID, and any comments relevant to the injection.

All standards, blanks, samples and other required runs must be injected within exactly 12 hours from the time of the injection of BFB.

11.1 Instrument Software Conventions

11.1.1 Quantitation method: Average response factor

11.1.2 File naming conventions:

11.1.2.1 Name calibration standards and instrument blanks as follows:

YMDDZZZ-XXX#

where: Y = Year

M = Month (A=Jan. B=Feb…)

DD = two digit day

ZZZ **= three** digit sequence number

XXX = QC Type (Tun=BFB, ICV= Initial calibration, CCV=continuing cal**)**

= numerical order

11.1.2.2 Name sample analyses as follows:

CCN-##R# or CCN##D#

where: CCN = work order number designated for the sample by LIMs

= the sample number (typically 01-20)

R# = indicating reanalysis of the sample (R1, R2…)

D# = indicating diluted analysis of the sample (D1, D2…)

11.2 Analytical Sequence

11.2.1 Order of analysis for the instrument calibration

- BFB (tune)
- initial calibration
- initial calibration verification

11.2.2 Order of analysis for the twelve-hour tune

- BFB
- continuing calibration verification
- instrument blank
- laboratory control sample
- samples

11.2.3 In some cases, if tune time remains after the initial calibration standards have been run, samples may be analyzed as long as they are preceded by an acceptable instrument blank and LCS.

11.2.4 All samples must be analyzed on a GC/MS system meeting the BFB, initial calibration, continuing calibration verification, and instrument blank criteria.

11.3 Preparations

11.3.1 Standards

11.3.1.1 Load the standard solutions onto the purge and trap apparatus. Purge for 11 minutes at ambient temperature, or 40° C for heated purge, and desorb for 4 minutes, analyzing all target compounds.

11.3.2 Method/Instrument Blanks

11.3.2.1 Method/instrument blanks are prepared by filling one 25 mL or 5 mL gastight syringe with DI water and spiking with internal standard solution and surrogate solution.

11.3.3 Laboratory Control Sample spikes

11.3.3.1 Laboratory control samples (LCS) are prepared at 5.0 µg/L**,** with 5 µg/L of surrogates for 25 mL samples and at 50 µg/L**,** with 50 µg/L of surrogates for 5 mL samples.

11.3.3.2 For certain projects and programs, a full list spike is required.

11.3.4 Samples

11.3.4.1 Liquid samples are collected with zero headspace and provided to the laboratory in 40 mL or 60 mL screw-cap vials with Teflon-lined silicon septa. To prepare liquid samples for analysis, pour the sample into a 5 mL or 25 mL Hamilton gastight syringe. Replace the plunger and adjust the volume to 5 mL or 25 mL. Spike each 25 mL sample with 2.5 µL of internal standard and 2.5 µL of surrogate solutions through the bore of the syringe. Spike each 5 mL sample with 5 µL of internal standard and 5 µL of surrogate solutions. Inject syringe contents into a 40 mL vial and place on the autosampler for analysis.

11.2.4.1.1 Take the pH of each water sample. After the sample aliquot is taken, add a couple of drops to pH paper. Do not add pH paper to sample vials. Record the pH of each sample on the batch sheet and GC/MS run log. No pH adjustment is to be performed.

11.3.4.2 Methanol extracts of medium/high concentration soil samples are contained in an autosampler vial capped with a Teflon-faced septum. The vial contains 1 mL of the methanol extract that also contains surrogates. A 5 mL Hamilton gastight syringe is filled with DI water and adjusted to 4.9 mL. The plunger is pulled back to 5.0 mL to allow for the addition of the methanol extract and internal standard solution. Add 100 µL of the methanol extract and 5.0 µL of internal standard solution to the syringe. Based on prior or screening results, if less than 100 µL of the methanol extract is required in order to get target analytes within the initial calibration range, add an additional amount of methanol to total 100 µL. Inject the contents of the syringe into a 40 mL vial and place on the autosampler for analysis.

11.3.4.3 For further details, see Sample Preparation Procedure –238, "Preparation of Soil/Sediment/Sludge Samples for the Analysis

of Volatile Organic Compounds by Closed-System Purge and Trap”**,** SOP 1.1.4.1

11.3.6 Matrix Spikes

11.3.6.1 For matrix spikes, in addition to spiking internal standard solution and surrogate solution, also add 5.0 µL of 8260B spike solution. For certain projects, a full target list matrix spikes are required. For medium/high concentration soil samples, the spiking solution is added at the time of the methanol extraction.

11.4 Analysis

11.4.1 Purge the sample for 11.0 (± 0.1) minutes.

11.4.2 After purging, the purge and trap apparatus will desorb onto the GC column by elevating the trap temperature to 260 °C and back-flushing the trap with helium for 4 minutes at 20 to 60 mL/minute.

11.4.3 After desorbing, the trap is reconditioned by baking at 260 °C for at least 7 minutes. When the trap has finished baking and is cool, it is ready for the next sample to be purged.

11.4.4 In each analytical run, all analytes must fall below the maximum calibration range established by the highest standard in the initial calibration. If an analyte is present at a concentration higher than the highest initial calibration standard, it must be reanalyzed at a lesser amount or dilution. A valid dilution is one in which the compound in question falls within the mid and high point calibration standard concentration.

11.5 Target Compound Identification

11.5.1 Target compounds are identified in the samples by analyzing standards under the same condition. Resultant mass spectra are compared to established library spectra and GC retention times are compared to retention times from the most recent continuing calibration standard. The mass spectrum of the sample compound and a laboratory library-generated spectrum must match according to the following criteria.

11.5.1.1 All ions present in the library mass spectrum at a relative intensity >10% must be present in the sample spectrum.

11.5.1.2 The relative intensities of ions specified above must agree within ± 20% between the library and sample spectra.

11.5.1.3 Ions >10% in the sample spectrum but not present in the library spectrum must be considered and accounted for. (These ions may be a result of co-eluting/closely-eluting compounds.)

11.5.2 If a compound analyzed by GC/MS techniques cannot be verified by all of the criteria listed above, but in the technical judgment of the mass spectral interpretation specialist the identification is correct, then the laboratory will report that identification.

11.5.3 Non-target compounds (tentatively identified compounds or TICs) are identified by comparing the mass spectra from the TICs to mass spectra contained in the National Institute of Standards and Technology (NIST) Mass Spectral Library.

11.6 Qualitative Analysis of Non-Target Compounds

11.6.1 Tentatively identify all compounds in the sample that have not already been identified as target compounds, or that are not surrogates, internal standards or semivolatile target compounds, by performing a computer-generated library search using the NIST 129K.1 mass spectral library (See **Section** 6.6.2). The library search must not be normalized.

11.6.2 Up to 30 tentatively identified compounds (TICs), including alkanes, of the greatest concentration are reported for each sample. The number of TICs required may vary, depending on project requirements.

11.6.3 Rules for making tentative identification:

11.6.3.1 TICs receiving a library search match of 85% or higher are considered a “probable match”. Report the compound identified.

11.6.3.2 For TICs receiving more than one library search match of 85% or higher, report the compound with the highest percent match.

11.6.3.3 For TICs receiving two or more library search matches of 85% or higher with the same percent match, report the first compound.

11.6.3.4 For TICs that are isomers receiving library search matches of 85% or higher, report the compound with the highest percent match.

Note: If in the opinion the experienced analyst/data reviewer there is sound technical evidence not to identify the compound as specified in sections 11.6.3.1 to 11.6.3.4 the justification must be documented in the narrative.

11.6.3.5 TICs receiving a library search match of < 85% are given a tentative identification by the analyst/data reviewer, if possible. If no identification can be made the TIC is reported as "unknown". If possible the unknown is further identified as part of a class of compounds (for example "unknown aromatic").

11.7 Quantitation

11.7.1 A relative response factor is established for each target and surrogate compound during the initial and continuing calibration verification procedures. Quantitation of target analytes is based on the mean relative response factor from the initial calibration curve.

11.7.2 Secondary ion quantitation is allowed only when there are sample matrix interferences with the primary ion. If secondary ion quantitation is performed, document the reasons in the SDG narrative.

11.7.3 TICs are quantified by comparing the mass spectral response from the reconstructed ion chromatogram (RIC) for the TIC peaks to the mass spectral response for a peak produced by the nearest internal standard compound. A response factor of 1 is assumed.

12.0 <u>Data Analysis and Calculations</u>

Calculations must be consistent with the QC SOP **13.4**: **"**Numerical Data Reduction**"**.

12.1 Calculation of the mean or average of a set of values:

$$\overline{X} = \frac{\sum_{i=1}^{n} X_i}{n}$$

where: n = total number of values
x_i = each individual value used to calculate the mean
x = the mean of n

12.2 Calculation of the standard deviation of a set of values:

$$\text{Standard deviation} = \sqrt{\frac{\sum_{i=1}^{n}\left(X_n - \overline{X}\right)^2}{n-1}}$$

12.3 Calculation of percent recovery:

12.3.1 LCS and surrogates:

$$\%R = \frac{Amount\ found}{Amount\ spiked}\ x\ 100$$

12.3.2 Matrix spikes:

$$\%\ \mathrm{R} = \frac{Amount\ in\ spiked\ sample - Amount\ in\ unspiked\ (native)\ sample}{Amount\ spiked}\ x\ 100$$

12.4 Calculation of % RSD

$$\%\mathrm{RSD} = \left(\frac{Standard\ deviation}{\overline{\mathrm{X}}}\right) \times 100$$

12.5 Calculation of RPD

$$RPD = \frac{|Value\ 1\ -\ Value\ 2|}{\left(Value\ 1\ +\ Value\ 2\right)/2}\ x100$$

12.6 Calculation of %Difference (%D)

$$\%Diff = \frac{Value\ -\ \overline{Reference\ \ value}}{\overline{Reference\ \ value}}\ x\ 100$$

12.7 Relative Response Factor

$$RRF = \frac{Ax\ x\ C(is)}{A(is)\ x\ Cx}$$

where:

Ax = Area of the characteristic ion (EICP) for the compound to be measured
A(is) = Area of the characteristic ion (EICP) for the specific internal standard
C(is) = Concentration of the internal standard (in µg/**L**)
Cx = Concentration of the compound to be measured

12.8 Linear Calibration using Least Squares Regression

$$y = ax + b$$

where: y = Instrument response (peak area)
a = Slope of the line (coefficient of x)
x = Concentration of the calibration standard
b = The intercept

12.9 Concentration

12.9.1 The area response of the characteristic ions in the extracted ion current profile (EICP) is tabulated against the concentration for each compound and internal standard.

12.9.2 Concentration of aqueous samples by GC/MS analysis using relative response factor:

$$\mu g / L = \frac{(Ax)(Is)(Df)}{(Ais)(\overline{RRF})(Vo)}$$

where: Ax = area of the characteristic ion from the EICP for the compound to be measured
Ais = area of the characteristic ion for the EICP for the internal standard
Is = amount of internal standard added (ng)
$\overline{RRF}$ = mean relative response factor from initial calibration standards
Vo = volume of water purged in milliliters
Df = dilution factor. If no dilution, Df = 1.0

12.9.3 Concentration of medium level soil samples <u>(dry weight basis)</u> by GC/MS

$$\mu g / kg = \frac{(Ax)(Is)(Df)(Vt)(1000)}{(Ais)(\overline{RRF})(Ws)(Va)(D)}$$

where: Ax, Ais, Is, $\overline{RRF}$ are the same as given for water

Df = Dilution factor which, for medium/high concentration soil extract is defined by the following formula:

$$\frac{\mu L \text{ concentrated extract used for dilution} + \mu L \text{ clean solvent}}{\mu L \text{ concentrated extract used for dilution}}$$

Vt = Total volume of methanol extract, in mL

Note: This is typically 10 mL or 5 mL even though only 1 mL is transferred to the autosampler vial.

Ws = Weight of soil/sediment sample extracted, in grams (g)
Va = Volume of the aliquot of methanol extract

Note: Typically this is 100 µL but can be the volume of sample extract (not including the methanol added to equal 100 µL) in µL added to DI water.

Ws = weight of sample extracted, in grams

$$D \text{ (dry weight)} = \frac{100 - \%\text{ moisture}}{100}$$

12.9.4 Concentration of aqueous and soil samples by GC/MS using quadratic (second order) fit in Target:

$$y = [n][b + m^1\ (Rsp) + m^2\ (Rsp\text{^}2)]$$

where: b = constant
m^1 = multiplier for the unsquared term
m^2 = multiplier for the squared term
x = area of analyte/area of Internal Standard
n = amount of Internal Standard
y = concentration in ng on column
Rsp = area of analyte/area of Internal Standard

Example: Area of acetone = 35659
Area of IS = 613275
b = -0.0909161
m^1 = 9.605304
m^2 = 7.132688
ηg of IS = 250
response = 35659/613275 = 0.058145

Amount in ηg on column =

$$(250\,\eta g)[-0.0909161 + 9.605304 \;x\; 0.058145 + 7.132688 \;x\; 0.058145\;\text{^}2] = 122.9\eta g$$

Concentration (water) $\mu g / L = \dfrac{(122.9\eta g)(Df)}{(Vo)}$

Concentration (soil) $\mu g / Kg = \dfrac{122.9\eta g}{(Ws)(D)}$

12.9.5 Concentration of aqueous and soil samples by GC/MS using linear regression analysis:

$$\frac{A_s C_{is}}{A_{is}} = aC_s + b$$

$$C_s = \frac{\left[\dfrac{A_s C_{is}}{A_{is}} - b\right]}{a}$$

where:
As = Area of the target analyte peak in the sample
Ais = Area of the internal standard peak
Cs = Concentration of the target analyte in the calibration standard
Cis = Concentration of the internal standard
a = Slope of the line (coefficient of Cs)
b = The intercept

Concentration (water) $\mu g / L = \dfrac{(Cs)(Df)}{(Vo)}$

Concentration (soil) $\mu g / Kg = \dfrac{Cs}{(Ws)(D)}$

12.9.6 Tentatively Identified Compound (TIC) Estimation

$$TIC\ Amount\ (water)\ \mu\mathbf{g/L} = \frac{(Area\,TIC)\ \mathbf{x}\ Amount\ (Std)(Df)}{Area(IS)\ x\ 1(RF)\ \mathbf{x}\ (Vo)}$$

$$TIC\ Amount\ (soil)\ \mu\mathbf{g/Kg} = \frac{(Area\,TIC)\ \mathbf{x}\ Amount\ (Std)(Df)(Vt)}{Area\ (IS)\ x\ 1(RF)\ \mathbf{x}\ (Vi)(Ws)(D)}$$

where:

Area (TIC)	=	area response from RIC for non-target compound
Amount (Std)	=	amount of internal standard added to the sample, in µg/L.
Area (IS)	=	area response of the nearest internal standard in the reconstructed ion chromatogram
1(RF)	=	assumed response factor of 1

12.10 Calculating Dilutions

12.10.1 The dilution factor for analysis of water samples for volatiles by this method is defined as the ratio of the number of milliliters of water purged (i.e., Vo above) to the number of milliliters of the original water sample used for purging. For example, if 12.5 mL of sample is diluted to 25.0 mL with DI water and purged, Df = 25.0 mL/12.5 mL = 2.0. If no dilution is performed, Df = 1.0.

If a methanol extract contains an analyte that exceeds the high level standard a dilution must be performed. Determine a level of dilution that will result in a value within the upper half of the calibration range. This is an acceptable dilution. Example: A 10x dilution is performed using 1 mL sample plus 9 mL diluent for a total volume of 10 mL. It should be recorded on the run log as "10x (1 mL in 10 mL)."

13.0 Method Performance

This method was validated through in-house laboratory studies of method detection limits and precision and accuracy for single analyst. The data are retained by the QA department.

14.0 Pollution Prevention

The solvents used in this procedure pose little threat to the environment when recycled and managed properly. Pollution prevention encompasses any technique that reduces or eliminates the quantity or toxicity of waste at the point of generation. Numerous opportunities for pollution prevention exist in laboratory operation. The EPA has established a preferred hierarchy of environmental management techniques that places pollution prevention as the management option of first choice. Whenever feasible,

laboratory personnel should use pollution prevention techniques to address their waste generation. When wastes cannot be feasibly reduced at the source, the Agency recommends recycling as the next best thing. See SOP 12.1, "Hazardous Waste Disposal", regarding laboratory procedures for recycling solvent waste streams.

15.0 Waste Management

It is the laboratory's responsibility to comply with all federal, state, and local regulations governing waste management, particularly the hazardous waste identification rules and land disposal restrictions, and to protect the air, water, and land by minimizing and controlling all releases from fume hoods and bench operations. Compliance with all sewage discharge permits and regulations is also required.

Samples preserved with HCl, HNO_3, or H_2SO_4 to pH <2 are hazardous and must be neutralized before being disposed, or must be handled as hazardous waste.

Refer to the Hazardous Waste Management and Safety SOPs located in the lab.

16.0 References

16.1 "Test Methods for Evaluating Solid Waste: Physical/Chemical Methods", SW-846, 3rd Edition, Update III, 12/96, Method 8260B, Methods 5030B and 5035

16.2 Standard Methods for the Examination of Water and Wastewater, 20th Edition (1998), Method 1080

16.3 Code of Federal Register, 40 CFR, Part 136, "Guidelines for Establishing Test Procedures for Priority Pollutants"

16.4 QC SOP 13.6: "Proper Documentation Procedures"

16.5 QC SOP 13.4: "Numerical Data Reduction"

16.6 NELAC Standards, effective July 2003, plus revisions

16.7 QA/G6: Guidance for Preparing Standard Operating Procedures (SOPs) EPA/600/B-07/001, April 2007.

16.8 Department of Defense Quality Systems Manual for Environmental Laboratories, **Version 4.1, 4/22/2009**

16.9 CompuChem Quality Manual, Revision **13**, **November 17, 2009**

16.10 Sample Control SOP 4.1, "Receiving Samples"

16.11 Sample Control SOP 4.6, "Storing Samples"

16.12 QC SOP 13.11, **"**Performing Annual Method Detection Limit (MDL) Studies**"**

17.0 Attachments as Tables, Diagrams, and Flowcharts

17.1 Attachment 1 – Target Analyte List

17.2 Attachment 2 – Target Analyte Reporting Limits

17.3 Attachment 3 – In-house Statistical Control Limits

17.4 Attachment 4 – Instrument Run Log

17.5 Attachment 5 – Standard Certificate of Analysis

17.6 Attachment 6 – DOD-QSM LCS Control Limits

Attachment 1

Volatile Target Compounds

Compounds	Internal Standard	Primary Quantitation Ion	Secondary Quantitation Ion(s)
dichlorodifluoromethane	1	85	87
chloromethane	1	50	52
vinyl chloride	1	62	64
bromomethane	1	94	96
chloroethane	1	64	66
trichlorofluoromethane	1	101	103
diethyl ether	1	74	45, 59
1,1-dichloroethene	1	96	61, 98
methylene chloride	1	84	49, 86
trans-1,2-dichloroethene	1	96	61, 98
1,1-dichloroethane	1	63	65, 83
2,2-dichloropropane	1	77	97
cis-1,2-dichloroethene	1	96	61, 98
bromochloromethane	1	128	49, 130
chloroform	1	83	85, 47
1,1,1-trichloroethane	1	97	99, 61
carbon tetrachloride	1	117	119, 121
1,1-dichloropropene	1	75	110, 77
benzene	1	78	77, 51
1,2-dichloroethane	1	62	98, 64
trichloroethene	1	130	95, 97
1,2-dichloropropane	1	63	39, 41
dibromomethane	1	174	93, 95
bromodichloromethane	1	83	85, 127
2-chloroethyl vinyl ether	1	63	65, 106
cis-1,3-dichloropropene	1	75	77, 110
acrolein	1	56	55, 38
iodomethane	1	142	127, 141
1,1,1-trichloro-2,2,2,-trifluoroethane	1	117	151, 153
1,1,2-trichloro-1,2,2,-trifluoroethane	1	85	101, 151
carbon disulfide	1	44	78, 76
acetone	1	43	58
3-chloropropene	1	39	41, 76
acetonitrile	1	41	39, 38
acrylonitrile	1	53	52, 51

ORIGINAL MASTER COPY CONTROLLED COPY
If words above are not highlighted, this is an uncontrolled copy of this document.

Attachment 1 (continued)

Volatile Target Compounds

Compounds	Internal Standard	Primary Quantitation Ion	Secondary Quantitation Ion(s)
methyl-tert-butyl ether	1	73	41, 43
vinyl acetate	1	43	86
2-butanone	1	43	57, 72
propionitrile	1	54	55, 52
methacrylonitrile	1	41	39, 67
1,4-dioxane	1	88	58
methylmethacrylate	1	69	100, 41
Surrogate #1: dibromofluoromethane	1	113	111, 192
Surrogate #2: 1,2-dichloroethane-d_4	1	65	102, 67
4-methyl-2-pentanone	2	43	85, 100
toluene	2	92	91
trans-1,3-dichloropropene	2	75	77, 110
1,1,2-trichloroethane	2	97	83, 85
ethylmethacrylate	2	69	41, 99
tetrachloroethene	2	164	168, 129
1,3-dichloropropane	2	76	78
2-hexanone	2	43	58, 71
dibromochloromethane	2	129	127, 48
1,2-dibromoethane	2	107	109, 81
chlorobenzene	2	112	114, 77
1,1,1,2-tetrachloroethane	2	131	119, 133
ethylbenzene	2	106	91
m,p-xylene	2	106	91
o-xylene	2	106	91
styrene	2	104	78, 103
bromoform	2	173	175, 254
isopropyl benzene	2	105	120
bromobenzene	2	156	77,158
1,1,2,2-tetrachloroethane	2	83	85, 131
1,2,3-trichloropropane	2	110	75, 112
trans-1,4-dichloro-2-butene	2	53	88, 90
Surrogate #3: d_8-toluene	2	98	70, 100

Attachment 1 (continued)

Volatile Target Compounds

Compounds	Internal Standard	Primary Quantitation Ion	Secondary Quantitation Ion(s)
n-propyl benzene	3	91	120
2-chlorotoluene	3	126	91
4-chlorotoluene	3	126	91
1,2,4-trimethyl benzene	3	105	120
1,3,5-trimethyl benzene	3	105	120
Pentachloroethane	3	167	130, 165
sec-butyl benzene	3	105	134
1,2-dichlorobenzene	3	146	111, 148
1,3-dichlorobenzene	3	146	111, 148
1,4-dichlorobenzene	3	146	111, 148
n-butyl benzene	3	91	92, 134
tert-butyl benzene	3	119	91, 134
p-isopropyl toluene	3	119	134, 91
1,2-dibromo-3-chloropropane	3	157	75, 39
1,2,4-trichlorobenzene	3	180	182, 145
hexachlorobutadiene	3	225	223, 227
naphthalene	3	128	64, 51
1,2,3-trichlorobenzene	3	180	182, 145
Surrogate #4: 4-bromofluorobenzene	3	95	174, 176
Internal Standard #1: fluorobenzene	NA	96	70
Internal Standard #2: chlorobenzene-d_5	NA	117	82, 119
Internal Standard #3: 1,4-dichlorobenzene-d_4	NA	152	150

Attachment 2

8260B Reporting Limits

CAS#	Compound	5-mL (µg/L)	25-mL (µg/L)	5-grams (µg/Kg)
630-20-6	1,1,1,2-Tetrachloroethane	5	0.5	5
354-58-5	1,1,1-Trichloro-2,2,2-trifluoroethane	5	0.5	5
71-55-6	1,1,1,-Trichloroethane	5	0.5	5
79-34-5	1,1,2,2-Tetrachloroethane	5	0.5	5
76-13-1	1,1,2-Trichloro-1,2,2-trifluoroethane	5	0.5	5
79-00-5	1,1,2-Trichloroethane	5	0.5	5
75-34-3	1,1-Dichloroethane	5	0.5	5
75-35-4	1,1-Dichloroethene	5	0.5	5
563-58-6	1,1-Dichloropropene	5	0.5	5
87-61-6	1,2,3-Trichlorobenzene	5	0.5	5
96-18-4	1,2,3-Trichloropropane	5	0.5	5
120-82-1	1,2,4-Trichlorobenzene	5	0.5	5
95-63-6	1,2,4-Trimethylbenzene	5	0.5	5
96-12-8	1,2-Dibromo-3-Chloropropane	5	0.5	5
106-93-4	1,2-Dibromoethane	5	0.5	5
95-50-1	1,2-Dichlorobenzene	5	0.5	5
107-06-2	1,2-Dichloroethane	5	0.5	5
78-87-5	1,2-Dichloropropane	5	0.5	5
108-67-8	1,3,5-Trimethylbenzene	5	0.5	5
541-73-1	1,3-Dichlorobenzene	5	0.5	5
142-28-9	1,3-Dichloropropane	5	0.5	5
106-46-7	1,4-Dichlorobenzene	5	0.5	5
123-91-1	1,4-Dioxane	250	25	250
594-20-7	2,2-Dichloropropane	5	0.5	5
78-93-3	2-Butanone	12.5	2.5	12.5
110-75-8	2-Chloroethyl vinyl ether	5	5	5
95-49-8	2-Chlorotoluene	5	5	5
591-78-6	2-Hexanone	12.5	2.5	12.5
107-05-1	3-Chloropropene	5	5	5
106-43-4	4-Chlorotoluene	5	5	5
108-10-1	4-Methyl-2-pentanone	12.5	2.5	12.5
67-64-1	Acetone	12.5	2.5	12.5
75-05-8	Acetonitrile	5	5	5
107-02-8	Acrolein	50	5	50

N/A = Not Applicable to matrix

Attachment 2 (continued)

8260B Reporting Limits

CAS#	Compound	5-mL µg/L	25-mL µg/L	5 grams µg/Kg
107-13-1	Acrylonitrile	50	5	50
71-43-2	Benzene	5	0.5	5
108-86-1	Bromobenzene	5	0.5	5
74-97-5	Bromochloromethane	5	0.5	5
75-27-4	Bromodichloromethane	5	0.5	5
75-25-2	Bromoform	5	0.5	5
74-83-9	Bromomethane	5	0.5	5
75-15-0	Carbon disulfide	5	0.5	5
56-23-5	Carbon Tetrachloride	5	0.5	5
108-90-7	Chlorobenzene	5	0.5	5
75-00-3	Chloroethane	5	0.5	5
67-66-3	Chloroform	5	0.5	5
74-87-3	Chloromethane	5	0.5	5
126-99-8	Chloroprene	5	0.5	5
156-59-2	cis-1,2-Dichloroethene	5	0.5	5
10061-01-5	cis-1,3-Dichloropropene	5	0.5	5
110-82-7	Cyclohexane	5	0.5	5
124-48-1	Dibromochloromethane	5	0.5	5
74-95-3	Dibromomethane	5	0.5	5
75-71-8	Dichlorodifluoromethane	5	0.5	5
100-41-4	Ethylbenzene	5	0.5	5
97-63-2	Ethylmethacrylate	50	5	50
87-68-3	Hexachlorobutadiene	5	0.5	5
74-88-4	Iodomethane	5	0.5	5
78-83-1	Isobutyl alcohol	250	25	250
89-82-8	Isopropyl Benzene	5	0.5	5
108-20-3	Isopropyl ether	5	0.5	5
108-38-3	m,p-Xylene	10	1	10
126-89-7	Methacrylonitrile	50	5	50
79-20-9	Methyl acetate	5	0.5	5
108-87-2	Methylcyclohexane	5	0.5	5
75-09-2	Methylene Chloride	5	0.5	5
80-62-6	Methylmethacrylate	50	5	50
1634-04-4	Methyl-tert-butyl ether	5	0.5	5
91-20-3	Naphthalene	5	0.5	5
104-51-8	n-Butyl Benzene	5	0.5	5
110-54-3	n-Hexane	N/A	0.5	N/A

N/A = Not Applicable to matrix

Attachment 2 (continued)

8260B Reporting Limits

CAS#	Compound	5-mL µg/L	25-mL µg/L	5 grams µg/Kg
103-65-1	n-Propyl Benzene	5	0.5	5
95-47-6	o-Xylene	5	0.5	5
76-01-7	Pentachloroethane	5	0.5	5
99-87-6	p-Isopropyl Toluene	5	0.5	5
107-12-0	Propionitrile	250	0.5	250
135-98-8	sec-Butyl Benzene	5	0.5	5
100-42-5	Styrene	5	0.5	5
98-06-6	tert-Butyl Benzene	5	0.5	5
127-18-4	Tetrachloroethene	5	0.5	5
109-99-9	Tetrahydrofuran	N/A	2	20
108-88-3	Toluene	5	0.5	5
156-60-5	trans-1,2-Dichloroethene	5	0.5	5
10061-02-6	trans-1,3-Dichloropropene	5	0.5	5
110-57-6	trans-1,4-Dichloro-2-butene	100	20	100
79-01-6	Trichloroethene	5	0.5	5
75-69-4	Trichlorofluoromethane	5	0.5	5
108-05-4	Vinyl acetate	5	1	5
75-01-4	Vinyl Chloride	5	0.5	5
1330-20-7	Xylene (total)	15	1.5	15

N/A = Not Applicable to matrix

Attachment 3

Statistical Control Limits for the LCS

Compound	Percent Recovery Range	
	25 mL purge	**5 mL purge & med./high conc. Soil**
Dichlorodifluoromethane	50-150	50-150
Chloromethane	50-150	51-150
Vinyl chloride [2]	61-150	54-136
Bromomethane	50-150	59-150
Chloroethane	54-150	55-150
Trichlorofluoromethane	56-150	55-150
1,1-dichloroethene [1, 2]	74-143	70-130
Carbon disulfide	50-150	66-146
1,1,2-trichloro-1,2,2,-luoroethane	78-150	59-138
Methylene chloride [2]	50-139	72-123
trans-1,2-dichloroethene	50-137	39-130
Methyl-tert-butyl ether	68-134	62-135
1,1-dichloroethane [2]	59-138	70-126
cis-1,2-dichloroethene [2]	69-140	70-131
2-butanone [2]	65-134	64-127
Chloroform	67-147	65-133
1,1,1-trichloroethane	71-137	69-134
Carbon tetrachloride [2]	68-145	70-139
Benzene [1, 2]	68-138	69-130
1,2-dichloroethane	61-150	67-133
Trichloroethene [1, 2]	55-150	72-130
1,2-dichloropropane [2]	67-137	73-123
Bromodichloromethane [2]	73-142	71-126
cis-1,3-dichloropropene	74-134	63-136
4-methyl-2-pentanone	66-127	51-141
Toluene [1]	60-142	61-131
trans-1,3-dichloropropene	66-130	60-140
1,1,2-trichloroethane	68-130	63-131
Tetrachloroethene [2]	65-137	78-136
2-hexanone	53-140	50-143
Dibromochloromethane	68-137	70-129
1,2-dibromoethane	73-128	61-137
Chlorobenzene [1, 2]	68-129	76-121

ORIGINAL MASTER COPY CONTROLLED COPY
If words above are not highlighted, this is an uncontrolled copy of this document.

Attachment 3 (continued)

Statistical Control Limits for the LCS

Compound	**Percent Recovery Range**	
	25 mL purge	**5 mL purge & med./high conc. Soil**
Ethylbenzene [2]	67-127	68-131
Styrene [2]	66-139	73-127
Bromoform [2]	62-139	66-133
Isopropyl benzene	56-143	62-138
1,1,2,2-tetrachloroethane	63-122	63-135
1,3-dichlorobenzene	64-136	79-120
1,4-dichlorobenzene [2]	69-125	79-116
1,2-dichlorobenzene	71-127	62-143
1,2-dibromo-3-chloropropane	71-128	57-133
1,2,4-trichlorobenzene	52-147	57-142
Xylene (total)	60-140	61-150

Table displays statistical control limits calculated in 2002.

[1] Denotes Ohio VAP spike compounds. Each recovery must be within established control limits.

[2] SC DHEC spike compounds. Each of these analytes must be recovered within 70-130%.

Attachment 4

COMPUCHEM a Division of Liberty Analytical Corp DATE ____/____/____ INITIAL TIME OF TUNE_____ SHIFT/S(A)_____(B)_____(C)____
GC/MS VOLATILE RUN LOG TIME TUNE EXPIRES_____ LINKER /METHOD_____
COMPUCHEM LOGBOOK 11 NNN 29 (5972hp59) METHOD: 8260B SOM01.2 (Circle one) or Other: _____
MAINTENANCE_____

	REJECTED	FILE NAME	REPORTED	pH	Vial	DATE	TIME	Client ID	SDG#	INJ. VOL.*	DF+	CHEMIST	COMMENTS (ETC.)/ DISPOSITION
1						/ /							
2						/ /							
3						/ /							
4						/ /							
5						/ /							
6						/ /							
7						/ /							
8						/ /							
9						/ /							
10						/ /							
11						/ /							
12						/ /							
13						/ /							
14						/ /							
15						/ /							
16						/ /							
17						/ /							
18						/ /							
19						/ /							
20						/ /							
21						/ /							
22						/ /							
23						/ /							
24						/ /							

*On-column sample aliquot +Not applicable to soil matrix

The presence of the Chemist's/Analyst's employee ID number, or signature, on this run log attests that strict compliance with the method's SOP has occurred. Any SOP deviations require documentation by the responsible chemist/analyst together with the chemist's/analyst's initials and the initials of the lab supervisor and a QA department representative, signifying approval of the deviation

Tune (ID #7008) Lot No.: _____ Calibration Group Code / Lot No.: _____
Internal Standard Lot No.: _____ Surrogate Lot No.: _____

REVIEWED BY: _____ Date_____

4/05/10: jad

Note: This page subject to change without notification.

Attachment 5

TCL4 1&2 HIGH

RESTEK

CERTIFICATE OF ANALYSIS

110 Benner Circle
Bellefonte, PA 16823-8812
Tel.: (800)356-1688
Fax: (814)353-1309

FOR LABORATORY USE ONLY–READ MSDS PRIOR TO USE.

Cat. No.: 30431 Lot No.: A027506
Description: 502.2 CAL 2000 Mega-Mix
Expiration Date[1]: August 2005 Storage: Freezer

Compound	CAS#	Percent Purity[3]	Concentration (weight/volume)[4]	Percent Uncertainty[5]
1,1-dichloroethane	75-34-3	99%	2,000 µg/ml	+/- .04%
1,1-dichloroethene	75-35-4	99%	2,000 µg/ml	+/- .04%
1,1-dichloropropene	563-58-6	99%	2,000 µg/ml	+/- .04%
1,1,1-trichloroethane	71-55-6	99%	2,000 µg/ml	+/- .04%
1,1,1,2-tetrachloroethane	630-20-6	99%	2,000 µg/ml	+/- .04%
1,1,2-trichloroethane	79-00-5	99%	2,000 µg/ml	+/- .04%
1,1,2,2-tetrachloroethane	79-34-5	99%	2,000 µg/ml	+/- .04%
1,2-dibromo-3-chloropropane	96-12-8	97%	2,000 µg/ml	+/- .04%
1,2-dibromoethane	106-93-4	99%	2,000 µg/ml	+/- .04%
1,2-dichlorobenzene	95-50-1	99%	2,000 µg/ml	+/- .04%
1,2-dichloroethane	107-06-2	99%	2,000 µg/ml	+/- .04%
1,2-dichloropropane	78-87-5	99%	2,000 µg/ml	+/- .04%
1,2,3-trichlorobenzene	87-61-6	99%	2,000 µg/ml	+/- .04%
1,2,3-trichloropropane	96-18-4	99%	2,000 µg/ml	+/- .04%
1,2,4-trichlorobenzene	120-82-1	99%	2,000 µg/ml	+/- .04%
1,2,4-trimethylbenzene	95-63-6	99%	2,000 µg/ml	+/- .04%
1,3-dichlorobenzene	541-73-1	99%	2,000 µg/ml	+/- .04%
1,3-dichloropropane	142-28-9	99%	2,000 µg/ml	+/- .04%
1,3,5-trimethylbenzene	108-67-8	99%	2,000 µg/ml	+/- .04%
1,4-dichlorobenzene	106-46-7	99%	2,000 µg/ml	+/- .04%
2-chlorotoluene	95-49-8	99%	2,000 µg/ml	+/- .04%
2,2-dichloropropane	594-20-7	99%	2,000 µg/ml	+/- .04%
4-chlorotoluene	106-43-4	99%	2,000 µg/ml	+/- .04%
p-isopropyltoluene	99-87-6	99%	2,000 µg/ml	+/- .04%
benzene	71-43-2	99%	2,000 µg/ml	+/- .04%
bromobenzene	108-86-1	99%	2,000 µg/ml	+/- .04%
bromochloromethane	74-97-5	99%	2,000 µg/ml	+/- .04%

[1]Expiration date of the unopened ampul stored at recommended temperature.
[2]Listed in alphabetical order.
[3]Purity was determined by one or more of the following techniques: GC/FID, HPLC, GC/ECD, GC/MS. Value rounded to the nearest LOWER whole percentage. In addition to detectors listed above, chemical identity and purity are confirmed using 1 or more of the following: MS, DSC, solid probe MS, GC/FPD, GC/NPD, GC/TC, FTIR, melting point, refractive index, and Karl Fisher. See data pack or contact Restek for further details.
[4]Based upon gravimetric preparation with balance calibration verified using NIST traceable weights (seven mass levels).
[5]Percent uncertainty based upon balance AND ASTM Class A volumetric glassware accuracy.

ISO 9001 REGISTERED RESTEK QUALITY SEPARATES US FROM THE REST

MANUFACTURED UNDER RESTEK'S ISO 9001 REGISTERED QUALITY SYSTEM: Certificate #97-HOU-AQ-8550 Issued by DNV Certification, Inc.

Attachment 5 (continued)

TCL4 1&2 HIGH

RESTEK

CERTIFICATE OF ANALYSIS (cont.)

FOR LABORATORY USE ONLY–READ MSDS PRIOR TO USE.

PAGE 2

Cat. No.: 30431 Lot No.: A027506

Description: 502.2 CAL 2000 Mega-Mix

Compound	CAS#	Percent Purity[3]	Concentration (weight/volume)[4]	Percent Uncertainty[5]
bromodichloromethane	75-27-4	99%	2,000 µg/ml	+/- .04%
bromoform	75-25-2	99%	2,000 µg/ml	+/- .04%
carbon tetrachloride	56-23-5	99%	2,000 µg/ml	+/- .04%
chlorobenzene	108-90-7	99%	2,000 µg/ml	+/- .04%
chloroform	67-66-3	99%	2,000 µg/ml	+/- .04%
cis-1,2-dichloroethene	156-59-2	99%	2,000 µg/ml	+/- .04%
cis-1,3-dichloropropene	10061-01-5	99%	2,000 µg/ml	+/- .04%
dibromochloromethane	124-48-1	99%	2,000 µg/ml	+/- .04%
dibromomethane	74-95-3	99%	2,000 µg/ml	+/- .04%
ethylbenzene	100-41-4	99%	2,000 µg/ml	+/- .04%
hexachlorobutadiene	87-68-3	99%	2,000 µg/ml	+/- .04%
isopropylbenzene	98-82-8	99%	2,000 µg/ml	+/- .04%
methylene chloride	75-09-2	99%	2,000 µg/ml	+/- .04%
m-xylene	108-38-3	99%	2,000 µg/ml	+/- .04%
naphthalene	91-20-3	99%	2,000 µg/ml	+/- .04%
n-butylbenzene	104-51-8	99%	2,000 µg/ml	+/- .04%
n-propylbenzene	103-65-1	99%	2,000 µg/ml	+/- .04%
o-xylene	95-47-6	99%	2,000 µg/ml	+/- .04%
p-xylene	106-42-3	99%	2,000 µg/ml	+/- .04%
sec-butylbenzene	135-98-8	99%	2,000 µg/ml	+/- .04%
styrene	100-42-5	99%	2,000 µg/ml	+/- .04%
tetrachloroethene	127-18-4	99%	2,000 µg/ml	+/- .04%
tert-butylbenzene	98-06-6	99%	2,000 µg/ml	+/- .04%
toluene	108-88-3	99%	2,000 µg/ml	+/- .04%
trans-1,2-dichloroethene	156-60-5	99%	2,000 µg/ml	+/- .04%
trans-1,3-dichloropropene	10061-02-6	97%	2,000 µg/ml	+/- .04%
trichloroethene	79-01-6	99%	2,000 µg/ml	+/- .04%
Solvent: purge & trap methanol	67-56-1	99%		

[1]*Expiration date of the unopened ampul stored at recommended temperature.*

[2]*Listed in alphabetical order.*

[3]*Purity was determined by one or more of the following techniques: GC/FID, HPLC, GC/ECD, GC/MS. Value rounded to the nearest LOWER whole percentage. In addition to detectors listed above, chemical identity and purity are confirmed using 1 or more of the following: MS, DSC, solid probe MS, GC/FPD, GC/NPD, GC/TC, FTIR, melting point, refractive index, and Karl Fisher. See data pack or contact Restek for further details.*

[4]*Based upon gravimetric preparation with balance calibration verified using NIST traceable weights (seven mass levels).*

Attachment 5 (continued)

TCL4 - GASES HIGH

RESTEK

CERTIFICATE OF ANALYSIS

110 Benner Circle
Bellefonte, PA 16823-8812
Tel.: (800)356-1688
Fax: (814)353-1309

FOR LABORATORY USE ONLY--READ MSDS PRIOR TO USE.

Cat. No.: 30042 Lot No.: A028050
Description: 502.2 Calibration Mix #1
Expiration Date[1]: March 2010 Storage: Freezer

Elution Order	Compound	CAS#	Percent Purity[3]	Concentration (weight/volume)[4]	Percent Uncertainty[5]
1	Dichlorodifluoromethane	75-71-8	99%	1,997 µg/ml	± 1.9%
2	Chloromethane	74-87-3	99%	2,003 µg/ml	± 1.3%
3	Vinyl chloride	75-01-4	99%	2,003 µg/ml	± 1.4%
4	Bromomethane	74-83-9	99%	1,997 µg/ml	± 1.3%
5	Chloroethane	75-00-3	99%	2,003 µg/ml	± 1.5%
6	Trichlorofluoromethane	75-69-4	99%	2,000 µg/ml	± 0.3%
Solvent:	Purge and trap Methanol	67-56-1	99%		

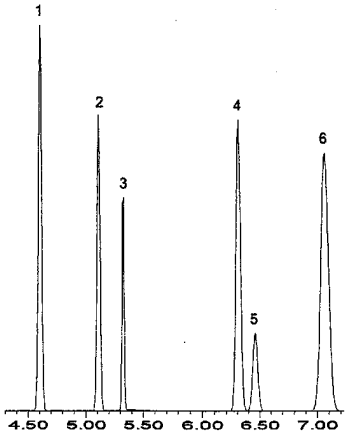

Column: 105m .32mm 1.8µm
Rtx-502.2 (cat.#10921)
Carrier gas: helium @ 2.2 ml/min.
Temp. program: 50°C (hold 12 min.)
Isothermal
Inj. temp.: 240°C
Det. temp.: 240°C
Detector type: MSD

John Lidgett
John Lidgett—QA Analyst

ISO 9001 REGISTERED RESTEK QUALITY SEPARATES US FROM THE REST

MANUFACTURED UNDER RESTEK'S ISO 9001 REGISTERED QUALITY SYSTEM: Certificate #97-HOU-AQ-8550 issued by DNV Certification, Inc.

[1] *Expiration date of the unopened ampul stored at recommended temperature.*
[2] *Listed in alphabetical order.*
[3] *Purity was determined by one or more of the following techniques: GC/FID, HPLC, GC/ECD, GC/MS. Value rounded to the nearest LOWER whole percentage. In addition to detectors listed above, chemical identity and purity are confirmed using 1 or more of the following: MS, DSC, solid probe MS, GC/FPD, GC/NPD, GC/TC, FTIR, melting point, refractive index, and Karl Fisher. See data pack or contact Restek for further details.*
[4] *Based upon gravimetric preparation with balance calibration verified using NIST traceable weights (seven mass levels).*
[5] *Percent uncertainty based upon balance AND ASTM Class A volumetric glassware accuracy.*

Attachment 5 (continued)

TCL4- KETONES HIGH

AccuStandard Inc.

125 Market Street
New Haven, CT 06513
USA

Ph: 203-786-5290
Fax: 203-786-5287
E-mail: usa@accustandard.com
www.accustandard.com

CERTIFICATE OF ANALYSIS

PRODUCT: S-9863-R1
DESCRIPTION: Custom VOA Std #2
LOT #: B3110072
SOLVENT: Methanol

EXPIRATION: Feb 9, 2004

See reverse for additional certification information.

This product is guaranteed accurate to + 0.5% of the Certified Analyte concentration through the Expiration Date on the Label.

Component	CAS #	Purity % (GC/FID)	Prepared Concentration[1] (µg/mL)	Certified Analyte Concentration[2] (µg/mL)
Acetone	67-64-1	99.9	1261 ± 50.44	1260
Methyl ethyl ketone	78-93-3	100	1261 ± 50.44	1261
4-methyl-2-pentanone	108-10-1	99.4	1261 ± 50.44	1253
2-hexanone	591-78-6	100	1261 ± 50.44	1261
Vinyl acetate	108-05-4	99.9	500.8 ± 20.03	500.3
2-Chloroethylvinyl ether	110-75-8	99.7	500.3 ± 20.01	498.8
Acrolein	107-02-8	90.0	5575 * ± 223.00	5018
Acrylonitrile	107-13-1	99.9	5000 ± 200.00	4995

8 Components

1. All weights are traceable through NIST, Test No. 822/254480.
2. Certified Analyte Concentration = Purity x Prepared Concentration. The Uncertainty calculated for this product is the Combined Uncertainty $u_c(y)$. It represents an estimated standard deviation equal to the positive square root of the total variance of the uncertainty of components. The Expanded Uncertainty is U which is $U_c(y)$ *K where K is the coverage factor at the 95% confidence level (K=2). Values reported above are Expanded Combined Uncertainty.
3. A product with a suffix (-1A, -2B, etc.) on its lot# has had its expiration date extended and is identical to the same lot# without the suffix.

* Weight compensated to 100% purity

Certified by: R. Cooper

This product was manufactured to meet the quality system requirements of ISO 9001

QR-ORG/INO-00
Rev. 11/0

Attachment 5 (continued)

TCL4-APPIX H1

AccuStandard Inc.

125 Market Street
New Haven, CT 06513
USA

Ph: 203-786-5290
Fax: 203-786-5287
E-mail: usa@accustandard.com
www.accustandard.com

CERTIFICATE OF ANALYSIS

PRODUCT: S-9862-R1
EXPIRATION: Feb 27, 2004
DESCRIPTION: Custom VOA Std #1
LOT #: B3110080 **See reverse for additional certification information.**
SOLVENT: Methanol

This product is guaranteed accurate to ± 0.5% of the Certified Analyte concentration through the Expiration Date on the Label.

Component	CAS #	Purity % (GC/FID)	Prepared Concentration[1] (µg/mL)	Certified Analyte Concentration[2] (µg/mL)
Acetonitrile	75-05-8	99.9	500.3 ±20.01	499.8
Allyl chloride	107-05-1	99.6	500.0 ±20.00	498.0
1-Chlorohexane	544-10-5	99.0	500.3 ±20.01	495.3
Chloroprene	126-99-8	98	500.0 ±20.00	490.0
trans-1,4-Dichloro-2-butene	110-57-6	97.4	25,670 * ±1026.80	25003
p-Dioxane	123-91-1	99.2	25,010 ±1000.40	24810
Ethyl methacrylate	97-63-2	99.0	5010 ±200.40	4960
Isobutyl alcohol	78-83-1	100	25,010 ±1000.40	25010
Methacrylonitrile	126-98-7	99.9	5010 ±200.40	5005
Methyl iodide	74-88-4	100	500.3 ±20.01	500.3
Methyl methacrylate	80-62-6	99.8	5003 ±200.12	4993
Pentachloroethane	76-01-7	97.3	514.0 * ±20.56	500.1
Propionitrile	107-12-0	99.9	25,010 ±1000.40	24985

13 Components

* Weight compensated to 100% purity

1. All weights are traceable through NIST, Test No. 822/254480.
2. Certified Analyte Concentration = Purity x Prepared Concentration. The Uncertainty calculated for this product is the Combined Uncertainty $u_c(y)$. It represents an estimated standard deviation equal to the positive square root of the total variance of the uncertainty of components. The Expanded Uncertainty is U which is $U_c(y)$ *K where K is the coverage factor at the 95% confidence level (K=2). Values reported above are Expanded Combined Uncertainty.
3. A product with a suffix (-1A, -2B, etc.) on its lot# has had its expiration date extended and is identical to the same lot# without the suffix.

Certified by: R. Cooper

This product was manufactured to meet the quality system requirements of ISO 9001

QR-ORG/INO-00

Attachment 5 (continued)

RESTEK

CERTIFICATE OF ANALYSIS

110 Benner Circle
Bellefonte, PA 16823-8812
Tel.: (800)356-1688
Fax: (814)353-1309

FOR LABORATORY USE ONLY—READ MSDS PRIOR TO USE.

Cat. No.: 30005 Lot No.: A019743
Description: VOA Matrix Spike Mix
Expiration Date[1]: January 2005

Elution Order	Compound	CAS#	Percent Purity[3]	Concentration (weight/volume)[4]	Percent Uncertainty[5]
1	1,1-dichloroethene	75-35-4	99%	2,500 µg/ml	± 0.2%
2	benzene	71-43-2	99%	2,500 µg/ml	± 0.2%
3	trichloroethene	79-01-6	99%	2,500 µg/ml	± 0.2%
4	toluene	108-88-3	99%	2,500 µg/ml	± 0.2%
5	chlorobenzene	108-90-7	99%	2,500 µg/ml	± 0.2%
Solvent:	purge and trap methanol	67-56-1	99%		

Column: 105m .53mm 3.0µm
Rtx®-502.2 (cat.#10910)
Carrier gas: hydrogen @ 40cm/sec
Temp. program: 40°C (hold 2 min.) to 240°C
@ 8°C/min. (hold 10 min.)
Inj. temp.: 200°C
Det. temp.: 250°C
Detector type: FID

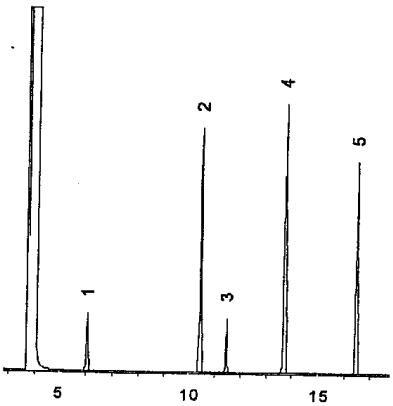

John Lidgett
John Lidgett—QA Analyst

[1]Expiration date of the unopened ampul stored at recommended temperature.
[2]Listed in alphabetical order.
[3]As determined by capillary GC/FID unless otherwise noted. Value rounded to the nearest LOWER whole percentage. In addition to GC/FID, chemical identity and purity are confirmed using 2 or more of the following: GC/MS, solid probe MS, GC/ECD, GC/FPD, GC/NPD, GC/TC, HPLC, DSC, FTIR, melting point, refractive index, and Karl Fisher.
[4]Based upon gravimetric preparation with balance calibration verified using NIST traceable weights (seven mass levels).
[5]Percent uncertainty based upon balance AND ASTM Class A volumetric glassware accuracy.

ISO 9001 REGISTERED RESTEK QUALITY SEPARATES US FROM THE REST

MANUFACTURED UNDER RESTEK'S ISO 9001 REGISTERED QUALITY SYSTEM: Certificate #97-HOU-AQ-8550 issued by DNV Certification, Inc.

Attachment 6

Solid and Aqueous LCS Control Limits for 8260B Required by the DOD-QSM

CAS#	Compound	Water CL	Water ME	Soil CL	Soil ME
630-20-6	1,1,1,2-Tetrachloroethane	80-130	75-135	75-125	65-135
354-58-5	1,1,1-Trichloro-2,2,2-trifluoroethane	N/A	N/A	N/A	N/A
71-55-6	1,1,1,-Trichloroethane	65-130	55-140	70-135	55-145
79-34-5	1,1,2,2-Tetrachloroethane	75-125	65-135	55-130	40-145
76-13-1	1,1,2-Trichloro-1,2,2-trifluoroethane	N/A	N/A	N/A	N/A
79-00-5	1,1,2-Trichloroethane	75-125	65-135	60-125	50-140
75-34-3	1,1-Dichloroethane	70-135	60-145	75-125	65-135
75-35-4	1,1-Dichloroethene	70-130	55-140	65-135	55-150
563-58-6	1,1-Dichloropropene	75-130	65-140	70-135	60-145
87-61-6	1,2,3-Trichlorobenzene	55-140	45-155	60-135	50-145
96-18-4	1,2,3-Trichloropropane	75-125	65-130	65-130	50-140
120-82-1	1,2,4-Trichlorobenzene	65-135	55-145	65-130	55-140
95-63-6	1,2,4-Trimethylbenzene	75-130	65-140	65-135	55-145
96-12-8	1,2-Dibromo-3-Chloropropane	50-130	35-145	40-135	25-150
106-93-4	1,2-Dibromoethane	80-120	75-125	70-125	60-135
95-50-1	1,2-Dichlorobenzene	70-120	60-130	75-120	65-125
107-06-2	1,2-Dichloroethane	70-130	60-140	70-135	60-145
78-87-5	1,2-Dichloropropane	75-125	65-135	70-120	65-125
108-67-8	1,3,5-Trimethylbenzene	75-130	65-140	65-135	55-145
541-73-1	1,3-Dichlorobenzene	75-125	65-130	70-125	65-135
142-28-9	1,3-Dichloropropane	75-125	65-135	75-125	70-130
106-46-7	1,4-Dichlorobenzene	75-125	65-130	70-125	65-135
123-91-1	1,4-Dioxane	N/A	N/A	N/A	N/A
594-20-7	2,2-Dichloropropane	70-135	60-150	65-135	55-145
78-93-3	2-Butanone	30-150	10-170	30-160	10-180
110-75-8	2-Chloroethyl vinyl ether	N/A	N/A	N/A	N/A
95-49-8	2-Chlorotoluene	75-125	65-135	70-130	60-140
591-78-6	2-Hexanone	55-130	45-140	45-145	30-160
107-05-1	3-Chloropropene	N/A	N/A	N/A	N/A
106-43-4	4-Chlorotoluene	75-130	65-135	75-125	65-135
108-10-1	4-Methyl-2-pentanone	60-135	45-145	45-130	30-165
67-64-1	Acetone	40-140	20-160	20-160	10-180
75-05-8	Acetonitrile	N/A	N/A	N/A	N/A
107-02-8	Acrolein	N/A	N/A	N/A	N/A

CL =control limit
ME = marginal exceedances
N/A = not included in DOD list

ORIGINAL MASTER COPY CONTROLLED COPY
If words above are not highlighted, this is an uncontrolled copy of this document.

Attachment 6

Solid and Aqueous LCS Control Limits for 8260B Required by the DOD-QSM

CAS#	Compound	Water CL	Water ME	Soil CL	Soil ME
107-13-1	Acrylonitrile	N/A	N/A	N/A	N/A
71-43-2	Benzene	80-120	75-130	75-125	65-135
108-86-1	Bromobenzene	75-125	70-130	65-120	55-130
74-97-5	Bromochloromethane	65-130	55-140	70-125	60-135
75-27-4	Bromodichloromethane	75-120	70-130	70-130	60-135
75-25-2	Bromoform	70-130	60-140	55-135	45-150
74-83-9	Bromomethane	30-145	10-165	30-160	10-180
75-15-0	Carbon disulfide	35-160	15-185	45-160	30-180
56-23-5	Carbon Tetrachloride	65-140	55-150	65-135	55-145
108-90-7	Chlorobenzene	80-120	75-130	75-125	65-130
75-00-3	Chloroethane	60-135	50-145	40-155	20-175
67-66-3	Chloroform	65-135	50-150	70-125	65-135
74-87-3	Chloromethane	40-125	25-140	50-130	40-140
126-99-8	Chloroprene	N/A	N/A	N/A	N/A
156-59-2	cis-1,2-Dichloroethene	70-125	60-135	65-125	55-135
10061-01-5	cis-1,3-Dichloropropene	70-130	60-140	70-125	65-135
110-82-7	Cyclohexane	N/A	N/A	N/A	N/A
124-48-1	Dibromochloromethane	60-135	45-145	65-130	55-140
74-95-3	Dibromomethane	75-125	65-135	75-130	65-135
75-71-8	Dichlorodifluoromethane	30-155	10-175	35-135	15-155
100-41-4	Ethylbenzene	75-125	65-135	75-125	65-135
97-63-2	Ethylmethacrylate	N/A	N/A	N/A	N/A
87-68-3	Hexachlorobutadiene	50-140	35-160	55-140	40-155
74-88-4	Iodomethane	N/A	N/A	N/A	N/A
78-83-1	Isobutyl alcohol	N/A	N/A	N/A	N/A
89-82-8	Isopropylbenzene	75-125	65-135	75-130	70-140
108-20-3	Isopropyl ether	N/A	N/A	N/A	N/A
108-38-3	m,p-Xylene	75-130	65-135	80-125	70-135
126-89-7	Methacrylonitrile	N/A	N/A	N/A	N/A
79-20-9	Methyl acetate	N/A	N/A	N/A	N/A
108-87-2	Methylcyclohexane	N/A	N/A	N/A	N/A
75-09-2	Methylene Chloride	55-140	40-155	55-140	40-155
80-62-6	Methylmethacrylate	N/A	N/A	N/A	N/A
1634-04-4	Methyl-tert-butyl ether	65-125	55-135	N/A	N/A
91-20-3	Naphthalene	55-140	40-150	40-125	25-140
104-51-8	n-Butylbenzene	70-135	55-150	65-140	50-150

CL =control limit
ME = marginal exceedances
N/A = not included in DOD list

ORIGINAL MASTER COPY CONTROLLED COPY
If words above are not highlighted, this is an uncontrolled copy of this document.

Attachment 6

Solid and Aqueous LCS Control Limits for 8260B Required by the DOD-QSM

CAS#	Compound	Water CL	Water ME	Soil CL	Soil ME
110-54-3	n-Hexane	N/A	N/A	N/A	N/A
103-65-1	n-Propylbenzene	70-130	65-140	65-135	50-145
95-47-6	o-Xylene	80-120	75-130	75-125	70-135
76-01-7	Pentachloroethane	N/A	N/A	N/A	N/A
99-87-6	p-Isopropyltoluene	75-130	64-140	75-135	65-140
107-12-0	Propionitrile	N/A	N/A	N/A	N/A
135-98-8	sec-Butylbenzene	70-125	65-135	65-130	50-145
100-42-5	Styrene	65-135	55-145	75-125	65-135
98-06-6	tert-Butylbenzene	70-130	60-140	65-130	55-145
127-18-4	Tetrachloroethene	45-150	25-165	65-140	55-150
109-99-9	Tetrahydrofuran	N/A	N/A	N/A	N/A
108-88-3	Toluene	75-120	70-130	70-125	60-135
156-60-5	trans-1,2-Dichloroethene	60-140	45-150	65-135	55-145
10061-02-6	trans-1,3-Dichloropropene	55-140	40-155	65-125	55-140
110-57-6	trans-1,4-Dichloro-2-butene	N/A	N/A	N/A	N/A
79-01-6	Trichloroethene	70-125	60-135	75-125	70-130
75-69-4	Trichlorofluoromethane	60-145	45-160	25-185	10-215
108-05-4	Vinyl acetate	N/A	N/A	N/A	N/A
75-01-4	Vinyl Chloride	50-145	35-165	60-125	45-140
1330-20-7	Xylene (total)	N/A	N/A	N/A	N/A

CL =control limit
ME = marginal exceedances
N/A = not included on DOD list

CompuChem
A Division Of
Liberty Analytical Corp.

501 Madison Avenue
Cary, NC 27513

NELAP accredited

SOP DOCUMENTATION FORM

This form must accompany all new and revised Standard Operating Procedures (SOPs) when you turn them in to Quality Assurance for review. Please fill out the entire block below (except effective date).

This is a new procedure _____ revised procedure ✓ outdated procedure (archive) _____

- Procedure Code: IP 481B SOP Section #: 1.3.2.4 Revision #: 12

SOP Title: GCMS Analysis of Low Concentration Volatiles in Soil/Sediment by SW-846 Method 8260B

Effective date: (QA fills in) 04-05-2010

- Procedure prepared by: Bob Meier Date: 04-01-2010
- Procedure approved by: (If the manager prepared the SOP, a qualified second party should sign) Date: 04-02-2010
- Reason for change: Address comments from SC DHEC SOP review plus changes from internal review
- This procedure meets the requirements of the following approved method references: SW-846, 3rd Edition, Update III, 12/96, method 8260B, method 5035A

Procedure approved by a QA Representative (unless QA Representative signed above):

_____ Date: _____

On an annual basis: Lab managers are required to review lab practices and revise the SOP if necessary. If no revision is necessary, indicate by your signature that the SOP has been reviewed.

Annual Review—Signature: _____ Date: _____

Annual Review—Signature: _____ Date: _____

Annual Review—Signature: _____ Date: _____

Annual Review—Signature: _____ Date: _____

Instrument Procedure 481B: GC/MS Analysis of Low Concentration Volatiles in Soil/Sediment/Sludge Samples by SW-846 Method 8260B

Table of Contents

SECTION	PAGE NO.
Section 1.0 – Scope and Application	2
Section 2.0 – Summary of Method	2-3
Section 3.0 – Definitions	3-4
Section 4.0 – Interferences	4-5
Section 5.0 – Safety	5
Section 6.0 – Equipment and Supplies	5-**7**
Section 7.0 – Reagents and Standards	**7**-14
Section 8.0 - Sample Preservation and Storage	14
Section 9.0 – Quality Control	**14-21**
Section 10.0 – Calibration and Standardization	**21-26**
Section 11.0 – Procedure	**26-33**
Section 12.0 – Data Analysis and Calculations	**34-39**
Section 13.0 – Method Performance	**39**
Section 14.0 – Pollution Prevention	**39**
Section 15.0 – Waste Management	**39**
Section 16.0 – References	**39-40**
Section 17.0 – Attachments as Tables, Diagrams, and Flowcharts	**40-41**
Attachment 1	**42-44**
Attachment 2	**45-47**
Attachment 3	**48-50**
Attachment 4	**51**
Attachment 5	**52-57**
Attachment 6	**58-59**
Attachment 7	**60-67**
Attachment 8	**68**
Attachment 9	**69**

ORIGINAL MASTER COPY CONTROLLED COPY
If words above are not highlighted, this is an uncontrolled copy of this document.

Instrument Procedure 481B: GC/MS Analysis of Low Concentration Volatiles in Soil/Sediment/Sludge Samples by SW-846 Method 8260B

1.0 Scope and Application

This Standard Operating Procedure (SOP) describes the procedure for the purge and trap GC/MS analysis of solid (soil, sediment and sludge) samples following Method 8260B and incorporating Method 5035A. The method is applicable to a wide range of organic compounds. Target compounds that may be analyzed by this method are listed in Attachment 1, along with their associated internal standards and quantitation ions. Note, however, that many of these compounds are not routinely analyzed.

The reporting limit is the low-level calibration standard concentration. Reporting limits for this method are shown in Attachment 3.

Staff members performing the procedures described in this SOP are responsible for reading, understanding, and complying with the SOP requirements. Supervisors are responsible for directing the analyst to the controlled SOP, and providing adequate explanation of the material contained therein.

This procedure is restricted to use by or under the supervision of analysts experienced in the instrumentation or preparative methods and who have demonstrated the ability to generate acceptable results through QC samples and analyst capability studies.

2.0 Summary of Method

Low concentration level volatiles samples are analyzed using a closed system purge and trap technique (Method 5035A). Field samples may be collected in vials containing a preservative solution (sodium bisulfate), immediately sealed and shipped to the laboratory at 4 °C ± 2 °C. Normally, an EnCore sampling device (or equivalent) is used to obtain a 5g sample that does not contain headspace. When the EnCore device is used, it is sent refrigerated to the laboratory and, within 48 hours of sampling, the contents of the Encore device must be transferred to a closed-system purge and trap **vial** and placed in a freezer at – 10 to – 20 °C.

A special autosampler is used for the analysis. This device allows the sample vial to remain closed while reagent water and a solution containing internal standards and surrogates are injected by a double-walled needle through the septum. The needle used to pierce the septum to deliver the water, internal standards, and surrogates is then the source of an inert gas which allows adequate mixing through the bottom of the needle. The same needle has entrance holes located above the sample/water level to collect and

transfer the headspace onto a sorbent column, where the purgeables are trapped. The autosampler also provides for heating the sample vial to 40 °C while the contents are being mixed and the sample constituents purged and trapped. After purging is completed, the sorbent column is heated and backflushed with the inert gas to desorb the purgeables onto a gas chromatograph (GC) wide-bore capillary column. The GC is temperature-programmed to separate the purgeables that are then detected with a mass spectrometer (MS).

3.0 Definitions

3.1 Method detection limit (MDL) – The minimum concentration of an analyte that can be measured and reported with 99% confidence that the analyte concentration is greater than zero and is determined from analysis of a sample in a given matrix containing the analyte (40 CFR, Part 136, Appendix B.)

3.2 Reporting Limit – The laboratory reporting limit is based on the lowest multipoint calibration standard concentration. For organic methods, values detected below the reporting limit and above the MDL may be reported and qualified as an estimated concentration.

3.2.1 To meet the requirements of the DOD-QSM, the reporting limit must be at least three times higher than the MDL value. The reporting limit may be adjusted upward in order to achieve this minimal ratio.

3.3 Reporting Units – µg/kg

3.4 A Sample Delivery Group (SDG) is defined by the following, whichever is more frequent:

- each 20 field samples received within a case, or
- each 7 calendar day period during which field samples in a case are received (14 calendar days if requested by the client) beginning with the receipt of the first sample.

NOTE: The DOD-QSM and SC DHEC do not accept the SDG approach, unless the samples are prepared in a single batch. When a group of up to 20 field samples of a similar matrix are prepared as one batch, method-specified QC samples such as a method blank, laboratory control sample, matrix spike, matrix spike duplicate, and matrix duplicate must also be prepared together. If samples are batched together from different sites, project-specific QC must be processed.

3.5 SC DHEC – South Carolina Department of Health and Environmental Control

3.6 DOD-QSM – Department of Defense Quality Systems Manual

3.7 Marginal Exceedance – Beyond the LCS control limit but within the marginal exceedance limits (set at 4 standard deviations around the mean). This outside boundary prevents a grossly out-of-control LCS from passing.

4.0 Interferences

4.1 Impurities in the purge gas or methanol, organic compounds out-gassing from the plumbing ahead of the trap, and solvent vapors in the laboratory account for the majority of contamination problems. Gas lines from the gas tanks to the instrument must be either stainless steel or copper tubing. Non-polytetrafluoroethylene (PTFE) thread sealants, or flow controllers with rubber components are not to be used. When potential interfering peaks are noted in laboratory method blanks, one or more of the following corrective actions may be necessary to reduce solvent contamination: purging the methanol used to prepare standard solutions, purging the DI water with helium or nitrogen, changing the purge gas source, and regenerating the molecular sieve purge gas filter.

4.2 Samples can be contaminated by diffusion of purgeable organics (particularly methylene chloride, fluorocarbons, and other common laboratory solvents) through the septum seal into the sample during storage and handling. Therefore, these samples are stored in the GC/MS VOA laboratory freezer; separate from laboratory standards, and they must be analyzed in a room in which the atmosphere is demonstrated to be free of all potential contaminants that will interfere with the analysis. Because methylene chloride will permeate PTFE tubing, all GC carrier gas lines and purge gas plumbing are to be constructed from stainless steel or copper tubing.

4.3 Contamination by carryover can occur whenever a sample is analyzed after a sample that contains high levels of organic compounds. Whenever an unusually concentrated sample is encountered, it must either be followed by analysis of an instrument blank or the next sample must be closely monitored to check for cross-contamination. For samples containing large amounts of water soluble materials, high boiling compounds, or high purgeable levels, it may be necessary to clean the purge and trap apparatus by purging a 10-20% methanol solution, followed by baking the purge and trap apparatus and the analysis of an instrument blank to confirm that the system is free from contamination. The trap and other parts of

the system are also subject to contamination; therefore, frequent bakeout and purging of the entire system may be required.

5.0 Safety

5.1 The toxicity and carcinogenicity of many chemicals used in this method have not been precisely determined: each chemical should be treated as a potential health hazard. Exposure to these chemicals should be minimized. Preparation of calibration standards, blanks, and samples is performed in a fume hood to minimize risk.

5.2 The following method analytes have been tentatively classified as known or suspected human or mammalian carcinogens: benzene, carbon tetrachloride, 1,2- dichloroethane, 1,1,2,2-tetrachloroethane, 1,1,2- trichloroethane, chloroform, 1,2-dibromoethane, trichloroethene, and vinyl chloride.

5.3 Appropriate protective equipment and clothing must be used under the assumption that all samples are potentially hazardous. During sample preparation, safety glasses, gloves and lab coats are a minimum requirement. The persistent presence of noxious odors may be indicative of failure of the laboratory ventilation system and must be reported to a supervisor or manager.

5.4 Laboratory staff members are required to review the Chemical Hygiene Plan for general safety policies, and Material Safety Data Sheets (MSDS) for solvents and reagents used in the laboratory. The MSDS are located in the Quality Assurance department.

6.0 Equipment and Supplies

6.1 5, 10, and 25 mL Gastight Syringes with Luerlock tips

6.2 1 and 10 µL Hamilton syringes

6.3 Assorted volumetric flasks ranging from 50 mL to 1000 mL

6.4 1 mL mininert vials

6.5 40 mL screw-top, PTFE-lined, septum-sealed vials

6.6 Magnetic stirring bars

6.7 Analytical Column

6.7.1 Supelco SPB-624 60-m, 0.32mm ID with 1.8 um film thickness

6.7.2 Descriptions of alternative capillary columns are presented in EPA Contract Laboratory Program (CLP) Statement of Work (SOW) documents. Columns other than those listed may be used if equivalency is demonstrated. Specifications for equivalency are also presented in the SOW documents. The equivalency documentation must be maintained and made available during on-site audits

6.8 Purge and **Trap** Autosampler System

6.8.1 Tekmar LSC

6.8.1.1 Tekmar, LSC 3000, LCS 3100 and Velocity XPT with glass frit bottom liquid sample purging vessel and Luerlock valve

6.8.1.2 The absorption trap must be at least 25 cm long and have an internal diameter of at least 0.105 inches (0.2667 cm).

6.8.1.3 The Supelco K (VOCARB 3000) trap consists of the following:

- Carbopack B, 10 cm
- Carboxen-1000, 6 cm
- Carboxen-1001, 1 cm

6.8.1.4 Alternate sorbent traps may be used if they meet the QC acceptance criteria. Performance documentation must be maintained and made available during an on-site audit.

6.8.2 Archon ALS

6.8.2.1 The Archon Model 5100, 4552 Purge and trap autosampler, interfaces directly to a Tekmar Purge and Trap Concentrators.

6.8.2.2 The autosampler is designed for soil samples and utilizes 40 mL VOA vials with low bleed Teflon septa. All samples, water and soil, are purged in situ in the VOA vials.

6.8.2.3 The Archon ALS has the capacity of up to 51 vials.

6.9 GCMS

6.9.1 Hewlett Packard 5890 Series

6.9.2 Hewlett Packard 6890 Series

6.9.3 Agilent 6890N Series

6.9.4 Hewlett Packard 5972 Mass Selective Detector (MSD)

6.9.5 Hewlett Packard 5973 MSD

6.9.6 Hewlett Packard 6890MSD

6.9.7 Agilent Technologies 5975 MSD

6.9.8 Interface (GC to mass spectrometer)

6.9.8.1 Direct capillary interface at 225 °C is used for Hewlett Packard MSDs.

6.10 Data system

6.10.1 The Hewlett Packard GC/MS systems utilize ChemServer software, for data acquisition.

6.10.2 For data processing, CompuChem uses the Hewlett Packard HP 9000 series 735 Unix Workstation employing Target3 and Envision software by Thru-Put Systems.

6.10.3 The reference library used is the NIST Library (NIST2005), purchased from ThermoFisher Scientific, plus updates and revisions.

6.11 Data storage

Data are stored on the Target3 Unix Workstation. The Workstation is backed up incrementally on a daily basis.

7.0 Reagents and Standards

All standards are prepared in the Volatile Organic Laboratory. Stock Standards are stored separately from samples in Teflon- sealed screw-cap bottles with zero headspace at -10 to -20 ^{o}C in the freezer units in the instrument laboratory when not in use. Protect the standards from light. Standards for gases usually need to be replaced after one week or as recommended by the manufacturer, unless the acceptability of the standard can be documented. Standards for the non-gases must be monitored and fresh standards prepared if a 20% drift is experienced. These standards need to be replaced after six months or as recommended by the manufacturer, unless the acceptability of the standard can be documented. 2-chloroethyl vinyl ether (CEVE) and styrene may have to be prepared more frequently. Secondary dilutions of Stock Standards must be checked frequently for signs of degradation or evaporation, especially just prior to their use in preparing the working calibration standards. Working standards must be prepared just prior to analysis unless they are to be purged by an autosampler. When an autosampler is used, the standards may be kept up to 12 hours in purge vessels connected via the autosampler to the purge and trap device.

Note**:** Detailed standard preparation information may be found in the Standard Preparation Logbook 11D(4), "GCMS VOA Standard Preparation Logbook", located in the Volatile Laboratory.

Note: All standards and reagents are subject to change in vendor and in concentration. The Reporting Limits are also subject to change, but must remain at or above the lowest point in the calibration.

7.1 Reagent Water-All water used in this procedure must be equivalent to ASTM Type II water (as it relates to specific conductance and specific resistance) which is subsequently purged with an inert gas and demonstrated to meet the blank contamination acceptance criteria contained in this Standard Operating Procedure (SOP). It is referred to throughout the remainder of this SOP as DI water.

7.2 Methanol (B&J Scientific, purge and trap grade)

7.3 Sodium bisulfate, $NaHSO_4$ - ACS reagent grade or equivalent

7.4 Tuning Standard

7.4.1 Bromofluorobenzene - Standard ID# 7008 at 25 µg/mL. Two µL, yielding 50 ng on column, are injected onto the column every 12 hours.

7.4.1.1 Prepare the standard by adding 50 µL Restek VOA Tuning Mix 5000 µg/mL) to an amount of purge and trap grade methanol in a 10 mL volumetric flask and bring to volume.

7.4.1.2 Prepare this standard monthly.

7.5 Calibration Standards

7.5.1 For the initial calibration, the internal standard solution is added automatically by the Archon Purge and Trap Autosampler. For all subsequent analyses, both the internal standard and the surrogate solutions are added automatically by the Archon autosampler.

Standard Preparation

Std. ID TCL4-High	**005 µg/kg**	**010 µg/kg**	**020 µg/kg**	**050* µg/kg**	**100 µg/kg**	**200 µg/kg**
8260 S.S.	10.0 µL	20.0 µL	50.0 µL	100.0 µL	200.0 µL	400.0 µL
TCL4-1&2	1.0 µL	2.0 µL	4.0 µL	10.0 µL	20.0 µL	40.0 µL
TCL4-gases	1.0 µL	2.0 µL	4.0 µL	10.0 µL	20.0 µL	40.0 µL
TCL4-ketones	1.0 µL	2.0 µL	4.0 µL	10.0 µL	20.0 µL	40.0 µL
TCL4-AppIX	1.0 µL	2.0 µL	4.0 µL	10.0 µL	20.0 µL	40.0 µL

*Continuing Calibration level

7.5.1.1 To prepare the standards at the concentrations shown in the column headers of **the preceding** table above, add the **µL** amount of standard shown to a 100 mL volumetric flask containing DI water, then bring up to volume.

Alternatively, the standards may be prepared at the above concentrations by diluting the 200 µg/kg standard directly into the purge and trap impingers. Dilute as follows:

- For a 100 µg/kg standard, add 2.5 mL to 5 mL DI water;
- For a 50 µg/kg standard, add 1.25 mL to 5 mL DI water;
- For a 20 µg/kg standard, add 0.50 mL to 5 mL DI water;
- For a 10 µg/kg standard, add 0.25 mL to 5 mL DI water;
- For a 5 µg/kg standard, add 0.125 mL to 5 ml DI water.

7.5.1.2 The concentration**s** of the compounds in the TCL4-1&2 High standard **are** 500 µg/mL. See Attachment 5 for the composition of this standard.

7.5.1.2.1 Prepare the standard by adding 1.25mL Restek 502.2 VOA 2000 MegaMix (2000 µg/mL) and 1.25 mL of Restek Custom 502.2 Additions Mix (2000 µg/mL) to an amount of purge and trap grade methanol in a 5 mL volumetric flask and bring to volume.

7.5.1.2.2 Prepare this standard every three months.

7.5.1.3 The concentration**s** of the compounds in the TCL4-gases High standard **are** 500 µg/mL. See Attachment 5 for the composition of this standard.

7.5.1.3.1 Prepare each standard by adding 1.25mL Restek 502.2 Calibration Mix #1 (2000 µg/mL) to an amount of purge and trap grade methanol in a 5 mL volumetric flask and bring to volume.

7.5.1.3.2 The method states that this standard usually needs to be replaced weekly, unless the standard manufacturer recommends otherwise, or unless the acceptability of the standard can be documented. This standard has generally proven to be more stable in the laboratory. The gas standard can be used for longer than a week if the gases in the continuing calibration (CCV) standard meet the CCV requirements when compared to the initial calibration standards that contain a gas standard that has been prepared within a one-week holding time. Prepare this standard monthly, or more frequently as need dictates, or when degradation is evident rendering the standard unacceptable.

7.5.1.4 The concentration**s** of the compounds in the TCL4-ketones standard **are** 500 **µ**g/mL, 1250 **µ**g/mL, or 5000 **µ**g/mL. See Attachment 5 for the composition of this standard.

7.5.1.4.1 Prepare the standard by transferring AccuStandard custom VOA Mix #2 to a mininert vial.

7.5.1.4.2 Replenish this standard as needed and replace every three months.

7.5.1.5 The concentration**s** of the compounds in the TCL4-AppIX standard **are** 500 **µ**g/mL, 5000 **µ**g/mL, or 25000 **µ**g/mL. See Attachment 5 for the composition of this standard.

7.5.1.5.1 Prepare the standard by transferring AccuStandard custom VOA Mix #1 to a mininert vial.

7.5.1.5.2 Replenish this standard as needed and replace every three months.

7.6 Initial Calibration Verification Standard (also the Full Spike LCS, MS, and MSD Stock Standard)

7.6.1 The ICV contains the full list of target analytes at the same concentration as the continuing calibration verification (CCV) standard. See Attachment 7.

7.6.2 The initial calibration curve must be verified using a standard from a second source. The laboratory purchases the initial calibration verification (ICV) standards from a different vendor than the ones used for the calibration standards. This is prepared in the same manner as described above. See Section 7.5 or Standard Preparation Logbook 11D(4). Also See Attachment 7.

7.6.2.1 The concentration**s** of the compounds in Second source TCL4-1 & 2 High standard **are** 500 µg/mL.

7.6.2.1.1 Prepare the standard by adding 1.25 mL of AccuStandard M-502A-R-10X and 1.25 mL of AccuStandard S-13035 to an amount of purge and trap grade methanol in a 5 mL volumetric flask and bring to volume with purge and trap grade methanol.

7.6.2.2 Prepare this standard every three months or when degradation is evident rendering the standard unacceptable.

7.6.2.3 The concentration**s** of the compounds in the second source TCL4-gases standard **are** 500 µg/mL. See Attachment 7.

7.6.2.3.1 Prepare each standard by adding 1.25 mL of AccuStandard M-502B-10X to an amount of purge and

trap grade methanol in a 5 mL volumetric flask and bring to volume.

7.6.2.3.2 The method states that this standard usually needs to be replaced weekly, unless the standard manufacturer recommends otherwise, or unless the acceptability of the standard can be documented. This standard has generally proven to be more stable in the laboratory. The gas standard can be used for longer than a week if the gases in the continuing calibration (CCV) standard meet the CCV requirements when compared to the initial calibration standards that contain a gas standard that has been prepared within a one week holding time. Prepare this standard monthly, or more frequently as need dictates, or when degradation is evident rendering the standard unacceptable.

7.6.3 The concentration**s** of the compounds in the second source TCL4-ketones standard **are** 500 µg/mL, 1250 µg/mL, or 5000 µg/mL. See Attachment 7.

7.6.3.1 Prepare each standard by adding 800µL of NSI custom Acrolein standard Q-6087-0, 800µL of Restek Custom Vinyl Acetate standard 560347, and 800µL of Restek Custom Ketone Plus to clean dry 2.5 mL-miniert and invert to mix..

7.6.3.2 Prepare this standard every three months or when degradation is evident rendering the standard unacceptable.

7.6.4 The concentration**s** of the compounds in the second source TCL4-AppIX standard **are** 500 µg/mL, 5000 µg/mL, or 25000 µg/mL. See Attachment 7.

7.6.4.1 Prepare the standard by transferring Restek custom VOA Standard #1 to a mininert vial.

7.6.4.2 Replenish this standard as needed and replace every three months or when degradation is evident rendering the standard unacceptable.

7.7 Internal Standards

Compounds in 8260 I.S. (Internal standard) at a concentration of 50 µg/mL (250 **µ**g/mL for the Archon)

- fluorobenzene
- D5-chlorobenzene
- D4-1,4-dichlorobenzene

7.7.1 Prepare the internal standard spiking solution by adding 0.2 mL Restek 8260A ampulated internal standard mix (2500 µg/mL) to an amount of purge and trap grade methanol in a 10 mL volumetric flask and bring to volume.

7.7.2 Prepare this standard every three months.

7.8 Surrogate Standard

Compounds in 8260 S.S. (Surrogate Standard) at a concentration of 50 µg/mL (250 µg/mL for the Archon)

- dibromofluoromethane
- D4-1,2-dichloroethane
- D8-toluene
- 4-bromofluorobenzene

7.8.1 Prepare the surrogate spiking solution by adding 0.2 mL Restek 8260A ampulated surrogate mix (2500 µg/mL) to an amount of purge and trap grade methanol in a 10 mL volumetric flask and bring to volume.

7.8.2 Prepare this standard every three months.

7.9 Short List Spike Standard

Compounds in 8260 Spiking Mixture (1001C) at a concentration of 25 µg/mL:

- 1,1-dichloroethene
- trichloroethene
- benzene
- toluene
- chlorobenzene

Note**:** The spiking cocktail is project dependent. This spiking mixture can also be used as a Laboratory Control Sample (LCS) spike. Some projects may require full analyte spike, and in that case, the standard used for the full analyte spike LCS is the ICV. For some programs, the CCV may be used in the place of the LCS.

7.9.1 Prepare this standard by adding 100 µl Restek VOA Matrix Spike Mix to an amount of purge and trap grade methanol in a 10 mL volumetric flask and bring to volume.

7.9.2 Prepare this standard every six months.

8.0 Sample Preservation and Storage

8.1 Samples are preserved, and stored according to the tables in Sample Control SOPs 4.1, "Receiving Samples" and 4.6, "Storing Samples." Sample holding times are also listed.

8.2 All samples must be analyzed within 14 days of collection.

8.3 Prior to analysis, all samples must be stored in the freezer unit in the laboratory at a temperature of -10 to -20 °C. After analysis, samples are returned to Sample Control for long-term storage and disposal.

9.0 Quality Control

9.1 Surrogates

9.1.1 Surrogate compounds are added to all field and QC samples prior to analysis. Surrogates are used to assess the efficiency of the analytical system.

9.1.2 Surrogate compounds must meet recovery criteria as shown below:

Surrogate Compound	**Soil % Recovery Range**
Dibromofluoromethane	71-141
D4-1,2-dichloroethane	70-139
D8-toluene	72-123
4-bromofluorobenzene	63-131

9.1.2.1 The same surrogates and recovery criteria are to be used for samples submitted to meet the regulatory requirements of the State of South Carolina.

9.1.2.2 The following table contains the surrogate recovery limits required by the DOD-QSM.

Surrogate Compound	**Soil % Recovery Range**
Dibromofluoromethane	N/A
D4-1,2-dichloroethane	N/A
D8-toluene	85-115
4-bromofluorobenzene	85-120

9.1.3 Samples with surrogate recovery failures must be re-extracted to confirm a matrix effect. Surrogate recovery failures in method blanks and LCS require re-extraction of the entire batch. Similar surrogate failures in the MS/MSD and original sample confirm a matrix effect and do not require re-extraction.

9.2 Internal Standards

9.2.1 The integrated areas of the quantitation ions of the internal standards are monitored in continuing calibration verification checks, samples, and QC for a change in retention time and response or sensitivity. These should remain reasonably constant over time.

Internal standard retention time and area responses must be assessed in each continuing calibration verification standard by comparison to the corresponding internal standard in the most recent initial calibration mid-point standard. Internal standard responses in samples and QC are compared to the most recent continuing calibration verification.

9.2.2 The area responses of the internal standards must be within 50-200% difference of the area responses compared to.

9.2.3 The retention time for the internal standards must be less than 30 seconds.

9.2.4 If any of these criteria cannot be met, the analytical system must be checked for malfunctions and corrections made. Re-analysis of any affected sample is required.

9.3 Method/Instrument Blanks

9.3.1 Before any samples are analyzed, it must be demonstrated that a laboratory reagent blank is free from contamination that would prevent the determination of any analyte of concern. Sources of background contamination are glassware, purge gas, sorbents, and equipment. Background contamination must be reduced to an acceptable level before proceeding with the next analysis.

9.3.2 All blanks must be analyzed on a GC/MS system meeting the BFB, initial calibration, and continuing calibration verification acceptance criteria.

9.3.3 A method blank is analyzed with each batch of up to 20 samples processed as a group within a 12-hour tune. If more than 20 samples are analyzed in a tune batch, a second method blank is required. Method blanks must be analyzed immediately following a valid continuing calibration verification analysis.

9.3.4 The concentration of the target compounds in the blank must be less than the reporting limit for each target compound, with the exception of the common laboratory contaminants acetone, 2-butanone, and methylene chloride, which must be <2X the reporting limit.

9.3.4.1 The DOD-QSM requires that the target compounds in the blank must be at a concentration of <½ the reporting limit and < the reporting limit for lab contaminants.

9.3.4.2 The SC DHEC requires that all compounds in the blank be less that the reporting limits except for the **common laboratory contaminants**, which must be <2X the reporting limit.

9.3.5 All samples processed within the same 12-hour tune associated with a method blank that does not meet the blank technical acceptance criteria must be reanalyzed.

9.3.6 Method interferences caused by contaminants in solvents, reagents, glassware, laboratory air, and other sample storage and processing hardware that lead to discrete artifacts and/or elevated baselines in gas chromatograms must be eliminated. The chromatographic system must be inspected for malfunctions, and corrections must be made as required before more samples are analyzed. An instrument blank is analyzed after a high concentration sample in order to eliminate carryover.

9.4 Laboratory Control Sample

9.4.1 A laboratory control sample (LCS) is prepared and analyzed with each tune batch of up to 20 samples. The LCS and matrix spikes are spiked with the same target analytes. The LCS is spiked at the same concentration as the matrix spike. The LCS is spiked with all compounds of interest in the project.

9.4.2 The percent recovery criteria, developed from in-house statistical data, for the analytes in the full LCS are listed in Attachment 2.

9.4.2.1 The LCS control limits required by the DOD-QSM are listed in Attachment 6 along with the marginal exceedances.

9.4.2.2 The following table presents the DOD-QSM and 2003 NELAC Standards allowed number of marginal exceedances governed by the number of compounds spiked into the LCS.

Number of analytes in the LCS	Allowed number of Marginal Exceedances
> 90	5
71-90	4
51-70	3
31-50	2
11-30	1
< 11	0

The LCS fails if the more than the allowed number of marginal exceedances occur or if a spike recovery is outside of the marginal exceedance limits.

9.4.3 Gases and known poor purging compounds

- gases: bromomethane
  chloromethane
  chloroethane
  vinyl chloride
  dichlorodifluoromethane
  trichlorofluoromethane)
- acetone
- 2-butanone
- carbon disulfide

- crotonaldehyde
- 1,2-dibromo-3-chloropropane
- 1,4-dioxane
- isobutyl alcohol
- 2-hexanone
- 4-methyl-2-pentanone
- vinyl acetate
- 2-chloroethyl vinyl ether

9.4.4 For SC DHEC, an expanded subset of analytes, representative of the compounds being reported, is employed and all analytes must have recovery limits within 70 - 130%. The analytes are:

- vinyl chloride
- 1,1-dichloroethene
- methylene chloride
- 1,1-dichloroethane
- cis-1,2-dichloroethene
- 2-butanone
- carbon tetrachloride
- benzene
- trichloroethene
- 1,2-dichloropropane
- bromodichloromethane
- tetrachloroethene
- chlorobenzene
- ethylbenzene
- styrene
- bromoform
- 1,4-dichlorobenzene

9.4.5 When the LCS fails to meet the acceptance criteria, the entire batch associated with it must be re-prepared and reanalyzed.

9.5 Matrix Spikes

9.5.1 A matrix spike and matrix spike duplicate (MS/MSD) are prepared and analyzed with every SDG. The MS/MSD and LCS are spiked with the same analytes.

9.5.2 For the MS/MSD, in addition to spiking internal standard solution and surrogate solution, also add 5.0 µL of 8260 spike solution. For a full LCS requirement, use the ICV standard. The same ICV standard can be used for projects submitted to meet the regulatory requirements of the State of South Carolina, but only the 17 analytes presented in **Section** 9.4.4 are assessed. The spiking solutions are added by piercing the septum with the syringe needle.

9.5.3 Matrix spikes have the following advisory recovery criteria:

Spike Compound	% Recovery Range
1,1-dichloroethene	59-172
Trichloroethene	62-137
Benzene	66-142
Toluene	59-139
Chlorobenzene	78-122
All others	50-150

9.5.4 Matrix spikes have the following advisory RPD criteria:

Spike Compound	% RPD
1,1-dichloroethene	22
Trichloroethene	24
Benzene	21
Toluene	21
Chlorobenzene	21
All others	25

Note: This table is subject to change without notice.

9.5.5 Most spike compounds should meet these criteria. If the criteria are not met in the MS/MSD but are met in the LCS, the results may be reported with the failures attributed to the matrix of the sample. If the LCS does not meet criteria, then all will have to be repeated as discussed above.

9.5.6 To meet the requirements of the DOD-QSM, the duplicate matrix spikes should meet the LCS control limits listed in Attachment 6. The RPD between the duplicate matrix spikes should be ≤ 30%.

9.5.6.1 If the duplicate matrix spikes fail DOD-QSM acceptance criteria, notify the project manager. The project manager will contact the client for guidance.

9.5.6.2 If the original sample results are associated with failing duplicate matrix spikes, qualify the results in the narrative as estimated concentrations. Refer to the DOD-QSM "J" flag.

9.6 Initial Calibration Verification

9.6.1 A second source initial calibration verification (ICV) standard is run after the initial calibration standards have met criteria.

9.6.2 The ICV must be within 20% of its expected value for each target analyte and surrogate or within 40% for the poor purgers and the gases. Sporadic failure of up to three target compounds is allowed but they must not exceed 40% of their expected value. Gases and poor purgers are listed above.

9.6.2.1 To meet the requirements for the DOD-QSM, the ICV must be ± 25% of its expected value for each target analyte.

9.6.3 If the ICV fails to meet the criteria in 9.6.2 or 9.6.2.1, take corrective action and reanalyze the standard. If the ICV fails again, repeat the initial calibration.

9.7 MDL Studies

9.7.1 On an annual basis and after major maintenance, a method detection limit (MDL) study is performed on at least one instrument per method and matrix. When multiple instruments are used, individual instrument MDL studies may be replaced by the analysis of an MDL check sample. The MDL check sample must be analyzed on all instruments, to demonstrate equivalent sensitivity.

9.7.1.1 The DOD-QSM requires that the MDL check sample be prepared at approximately 2x the MDL and is analyzed on a quarterly basis for each matrix. A response must be detected in the 2x MDL check sample. Additionally, qualifying ions of 50% or higher must also be present. For more information on MDL studies, refer to QC SOP 13.11, "Performing Annual Method Detection Limit (MDL) Studies."

9.8 Corrective action: Instrument Problems/Preventative Maintenance

9.8.1 If a low response is observed for the early eluting compounds such as the gases, replacement of the trap or septum may be necessary. In addition, adjustments to the purge flow may be necessary to achieve a desired response for these compounds. If such adjustments do not help, it may be necessary to check the fittings on the purge and trap device and on the column for leaks. This is done with a helium leak detector and software utility programs.

9.8.2 Column maintenance or replacement may be necessary if peak tailing or broad chromatographic peaks are observed.

9.9 Contingency

9.9.1 If due to a lab accident or to QC failures, a re-preparation and analysis are required for the sample and insufficient sample volume remains, the Project Manager must be alerted and will contact the client for direction on how to proceed.

9.9.2 If persistent contamination occurs in the laboratory, analysis must be halted until the source of the contamination can be identified and isolated. When the contamination issue is resolved, samples analysis may proceed.

9.9.3 Refer to the corresponding Data Review SOP (number will vary among sections) for information on how to handle reporting of data that are unacceptable or out-of-control.

9.9.4 Any other issues that potentially effect data quality must be addressed with the Project Manager.

10.0 Calibration and Standardization

Note: The laboratory reporting limit is at or above the lowest initial calibration standard **concentration.**

10.1 BFB Tuning

10.1.1 The analysis of the instrument performance check solution is performed by injecting 50 ηg of BFB (2 µL STD ID#7008) into the GC using a 10 µL Hamilton syringe. BFB may be analyzed simultaneously with a continuing calibration verification standard as long as all QC criteria are met.

10.1.2 The peak selection criteria for BFB analysis are as follows (in order of performance):

10.1.2.1 Average one scan prior to the apex of the BFB peak to one scan after the apex, subtracting a single background scan prior to the peak, but no more than 20 scans prior to the elution of BFB. Also, do not subtract part of the BFB peak.

10.1.2.2 Choose the apex of the BFB peak only and include background subtraction.

Note: Background subtraction is performed to eliminate interference and when performed, the subtracted scan must be no more than 20 scans prior to the elution of the BFB and no scans within the BFB peak may be subtracted.

10.1.2.3 Choose a single scan or a range of scans within the BFB peak and include background subtraction.

10.1.3 The analysis of the instrument performance check solution must meet the ion abundance criteria given in the following table.

BFB Key Ions and Ion Abundance Criteria

Mass	Ion Abundance Criteria
50	15-40% of m/z 95
75	30-60% of m/z 95
95	Base Peak; 100% relative abundance
96	5-9% of m/z 95
173	<2% of m/z 174
174	>50% of m/z 95
175	5-9% of m/z 174
176	>95% but less than 101% of m/z 174
177	5-9% of m/z 176

10.1.4 BFB technical acceptance criteria must be met before any standards, samples, or required blanks are analyzed. GC/MS tuning and Mass

Calibration forms must be printed and attached to the instrument run log page for each tune. The relative abundance for each ion is calculated to two decimal places.

10.1.5 If BFB technical acceptance criteria are not met, retune the GC/MS system. It may also be necessary to clean the ion source, clean the quadrupole rods, if serviceable, or take other corrective action to achieve the technical acceptance criteria.

10.2 Initial Calibration

10.2.1 Prior to the analysis of samples and required blanks, and after the instrument performance check solution (BFB) criteria have been met, each GC/MS system must be calibrated at six concentrations to demonstrate instrument sensitivity and the linearity of responses for the purgeable target compounds.

10.2.2 Prepare standards according to the Initial Calibration Standard Preparation Table in Section 7.5. The purge and trap volume is 5 mL. All initial calibration standards must be analyzed at the concentration levels and frequency described in this SOP on a GC/MS system meeting the BFB technical acceptance criteria. The analysis of the six calibration standards determines the linearity of the six-point initial calibration curve.

10.2.3 The area response of the characteristic ions in the extracted ion current profile (EICP) is tabulated against the concentration for each compound and internal standard. Relative response factors (RRF) are calculated for each compound.

10.2.4 Minimum relative response factors for the System Performance Check Compounds (SPCC) must be met and are listed in the following table.

Relative Response Factor Criteria for SPCCs:

Volatile Compound	**Minimum RRF**
Chloromethane	0.10
1,1-dichloroethane	0.10
Chlorobenzene	0.30
Bromoform	0.10
1,1,2,2-tetrachloroethane	0.30

10.2.5 The following Calibration Check Compounds (CCC) have maximum % RSD criteria of ≤ 30%:

- 1,1-dichloroethene
- chloroform
- 1,2-dichloropropane
- toluene
- ethylbenzene
- vinyl chloride

10.2.5.1 The remaining compounds must have an RSD of ≤ 15%. If the % RSD is 15% or less, the average relative response factor may be used for quantitation. If the % RSD is greater than 15% then an alternate method for quantitation, such as a linear calibration using least squares regression or quadratic fit, may be used. When one of these options is used, the line must not be forced through the origin.

If the linear or quadratic regression fit is used, the correlation coefficient must be ≥ 0.990. These alternate methods of quantitation are available in the ThruPut system.

Note: The DOD-QSM requires that the linear least squares regression correlation coefficient must be ≥ 0.995 and does not allow the used of quadratic fit.

10.2.5.2 If the initial calibration does not meet the criteria above, corrective action is necessary.

- Check the instrument operating conditions and perform maintenance as necessary. It may be necessary to clean the ion source, perform column maintenance, change the column, service the purge and trap device, or take other corrective action to achieve the technical acceptance criteria.

- Compare responses for the analyte in each of the standard levels to verify that a single standard analysis is not presenting results significantly higher or lower then the other standard analyses, as this would indicate that the standard solution was prepared in error. If that is the case, re-prepare and reanalyze the standard.

10.2.7 The initial calibration verification must be analyzed after each initial calibration and must meet the acceptance criteria. If the ICV fails, then a new initial calibration curve must be generated.

10.3 Continuing Calibration Verification

10.3.1 Before the analysis of samples and blanks, but after BFB and initial calibration acceptance criteria have been met, each GC/MS system must be routinely checked by analyzing a continuing calibration verification standard. This standard contains all purgeable target analytes and surrogate compounds. It is used to ensure that the instrument meets the sensitivity and linearity requirements of the method throughout the analytical sequence.

10.3.2 A check of the calibration curve must be performed once every 12 hours, beginning with the injection of BFB. A percent difference of the response for each compound compared to the mean relative response factor from the initial calibration is calculated when performing the average response factor model.

10.3.3 The calculated percent difference must be less than or equal to 20% for the CCCs listed above in Section 10.2.5. Minimum response factor criteria for the continuing calibration verification standard (SPCCs) are also shown in Section 10.2.4.

10.3.3.1 If a regression fit model was used for analytes in the initial calibration, the continuing calibration verification is performed using percent drift (difference) for the CCCs.

10.3.4 As indicated for the initial calibration acceptance criteria, for the continuing calibration verification, the remaining target analytes (non-CCC compounds) do not have defined % difference criteria. We have established a warning limit of 50%D and an action limit of 90%D. These values have been inserted as defaults into the data reduction software program. This is based strictly on established U.S. EPA data validation guidelines where values greater than 90% RSD results in rejection of data.

10.3.4.1 For samples submitted to meet the regulatory requirements of the State of South Carolina, **all non-CCC target analytes must be within 30% acceptance criteria, with the exception of the**

poor purgers listed in Section 9.4.3. The poor purgers should fall with 40% acceptance criteria.

10.3.5 If continuing calibration verification acceptance criteria cannot be met after inspection and normal maintenance, a new initial calibration will have to be performed.

Note: Method 8260B indicates that if the CCCs are not required analytes, then all required analytes, must meet the 20% difference/drift criterion. Our typical analysis includes all of the CCCs.

11.0 Procedure

Documentation must follow the requirements in QC SOP **13.6**: **"**Proper Documentation Procedures**"**. All injections must be recorded on the instrument runlog (Attachment 4) along with the date, time (use a 24 hour clock), the volume injected, operator ID, and any comments relevant to the injection. Circle the Method used to perform the analysis. Condition codes, abbreviations defined in Attachment 8, are used to document failed and qualified injections. Preventive maintenance such as clipping the front-end of the column must be recorded in the logbook. Any major maintenance, i.e., changing the source or column, must be recorded in the instrument maintenance logbook.

All samples must be analyzed on a GC/MS system meeting the BFB, initial calibration, continuing calibration verification, and instrument blank criteria.

11.1 Instrument Software Conventions

11.1.1 Quantitation method: Average of the whole

11.1.2 File naming convention: XX123456X78

where: XX = Analysis type
123456 = Date/Lab ID with first digit dropped
Y = shift
78 = instrument #

11.1.3 Analysis type prefixes

11.1.3.1 Standard: CS, CT, CU, CV, CW, CX

11.1.3.2 Initial Sample Injection:

- SDG-Sample Number-Shift-Instrument, e.g.**,** Q1636-1A52

11.1.3.3 Sample reinjection:

- SDG-Sample Number-J-Shift-Instrument, e.g., Q1636-1JA52

11.1.3.4 Sample re-extraction:

- SDG-Sample Number-R-Shift-Instrument, e.g., Q1636-1RA52

11.1.3.5 Sample dilution:

- SDG-Sample Number-D-Shift-Instrument, e.g., Q1636-1DA60

11.1.3.6 Additional repeats:

- SDG-Sample Number-(J2, R2, D2)-Shift-Instrument, e.g., Q1636-1J2A52

11.2 Analytical Sequence

11.2.1 Order of analysis for the instrument calibration:

- BFB (tune)
- initial calibration
- initial calibration verification

11.2.2 Order of analysis for the twelve-hour tune:

- BFB
- continuing calibration verification
- instrument blank
- laboratory control sample-LCS
- samples

11.2.3 All samples must be analyzed on a GC/MS system meeting the BFB, initial calibration, continuing calibration verification, and instrument blank criteria.

11.2.3.1 If tune time remains after the initial calibration standards have been run, samples may be analyzed as long as they are preceded by a valid instrument blank.

11.3 Preparations

11.3.1 Standards

11.3.1.1 The analysis of the instrument performance check solution is performed by injecting 50 ng of BFB (2 **µL** Standard ID#7008) into the GC using a 10 µL Hamilton syringe.

11.3.1.2 Calibration standards are prepared by spiking the appropriate volume of each standard solution into 5 mL of sparged DI water contained in a 5 mL syringe. This is then added to a 40 mL vial which is immediately capped with a PTFE-lined, septum-sealed cap and loaded into the Archon autosampler.

Initiate the Archon autosampler which will provide mixing, the addition of 5 mL of water containing 1 µL of internal standards and 1 µL of surrogate (5 µL of 50 **µ**g/mL solutions if spiked by the chemist and not the Archon), heating at 40 °C, and purging for 11 minutes. The system will then transfer the constituents in the headspace to the Tekmar 3000 purge and trap concentrator and will then desorb all target analytes for 4 minutes before analysis. The analyses of the six calibration standards determine the linearity of the six-point initial calibration curve.

11.3.2 Instrument Blank and Method Blank

11.3.2.1 An instrument blank is prepared by filling a 40 mL VOA vial with 5 mL of purged DI water and sealing with a screw-top, PFTE-faced, septum-sealed cap. This is placed into the Archon autosampler where DI water, 1 µL of internal standards, and 1 µL of surrogates are added automatically to the blank (5 µL of 50 **µ**g/mL solutions if spiked by the chemist and not the Archon). It is analyzed by a closed system heated purge and trap analysis.

11.3.2.2 A Method Blank is similar to an Instrument Blank in composition but it is prepared at the same time samples are prepared and is stored in the refrigerator. If samples are received from the field already in vials with sodium bisulfate preservative solution, only an Instrument Blank is required.

11.3.3 Laboratory Control Sample

11.3.3.1 A laboratory control sample (LCS) is prepared by filling a 40 mL VOA vial with 5 mL of purged DI water. To this 10 µL of the spiking standard is added before sealing with a screw-top, PFTE-faced, septum-sealed cap. This is placed into the Archon autosampler where DI water, 1 µL of internal standards, and 1 µL of surrogates are added automatically (5 µL of 50 **µ**g/mL solutions if spiked by the chemist and not the Archon). It is analyzed by a closed system heated purge and trap analysis.

11.3.3.2 For certain projects and programs, a full list spike is required.

11.3.4 Samples

11.3.4.1 Solid samples are prepared by Method 5035. For details see Sample Preparation Procedure –238: "Preparation of Soil/Sediment/Sludge Samples for the Analysis of Volatile Organic Compounds by Closed-System Purge and Trap."

11.3.4.2 The choice of whether a 5 g or medium level sample is analyzed is generally based on a screen analysis.

11.3.4.3 Samples are stored in a rack located in the volatile GC/MS freezer at -10 to -20 °C. Samples are allowed to come to room temperature and, 5 mL of DI water added by piercing the septum, then loaded into the Archon autosampler carousel shaking each vial gently so that the contents move freely.

11.3.4.4 In some case, samples are preserved with 5 mL of a solution of sodium bisulfate. In those cases, the vials are removed from a refrigerator, maintained at 2-6 °C, allowed to come to room temperature and loaded into the Archon autosampler, shaking each vial gently so that the contents move freely and the stirring bar will be able to spin.

11.3.5 Matrix Spikes

11.3.5.1 For sample spikes, the Archon will spike 1 µL of internal standard solution and 1 µL of surrogate solution (5 µL of 50 **µ**g/mL solutions is spiked by the chemist and not the Archon), also add 10.0 µL of 8260B spike solution.

11.3.5.2 For certain projects, full target list matrix spikes are required.

11.4 Analysis

11.4.1 When the Archon autosampler is initiated, the system will add 5 mL of purged DI water, containing 5 µL of internal standards and 5 µL of surrogates, by piercing the septum.

11.4.2 Prior to purging**,** the sample is heated to 40 °C. The sample is purged for 11 minutes, while mixing. For soil samples preserved with a sodium bisulfate solution, the stirring bar is turned on.

11.4.3 The same needle that is used to add the DI water is the source for the inert gas used for purging. The needle also contains slots above the sample/water level which provide a path for the headspace to be directed to the Tekmar 3000 purge and trap concentrator. This contains the trap that is then thermally desorbed into the GC/MS instrument.

11.4.4 After purging, the Purge and Trap Concentrator apparatus will desorb onto the GC column by elevating the trap temperature to 260 °C and back-flushing the trap with helium for 4 minutes at 20 to 60 mL/minute.

11.4.5 After desorbing, the trap is reconditioned by baking at 260 °C for at least 7 minutes. When the trap has finished baking and is cool, it is ready for the next sample to be purged.

11.4.6 In each analytical run, all analytes must fall below the maximum calibration range established by the highest standard in the initial calibration. If an analyte is present at a concentration higher than the highest initial calibration standard, it must be reanalyzed at a lesser amount or dilution. A valid dilution is one in which the compound in question falls above the mid-point calibration standard concentration. The dilution is considered valid if the analyte concentration is above 50 µg/kg.

11.5 Target Compound Identification

11.5.1 Target compounds are identified in the samples by analyzing standards under the same conditions used for samples. The resulting mass spectra are compared to established library spectra and GC retention times to retention times from the latest continuing calibration standard. The mass spectrum of the sample compound and a laboratory library-generated spectrum must match according to the following criteria:

11.5.1.1 All ions present in the library mass spectrum at a relative intensity >10% must be present in the sample spectrum.

11.5.1.2 The relative intensities of ions specified above must agree within ± 20% between the library and sample spectra.

11.5.1.3 Ions >10% in the sample spectrum but not present in the library spectrum must be considered and accounted for. (These ions may be a result of co-eluting/closely-eluting compounds.)

11.5.2 If a compound analyzed by GC/MS techniques cannot be verified by all of the criteria listed above, but in the technical judgment of the mass spectral interpretation specialist the identification is correct, then the laboratory will report that identification.

11.5.3 If any of the internal standards, surrogates, or spike compounds are missing or failing, check the peak integration in "Target Review". Changes can be made in Target Review and EICPs can be generated. Any compound for which manual peak integration has been performed will have an "M" flag displayed on the quantitation report. All manual integration must follow the procedures documented in SOP 13.18, "Manual Chromatographic Peak Integration Procedures." These entries must be assigned a numerical code and the analyst's initials and the date must appear on each quantitation report page containing an "M" flag. For multiple "M" flags appearing on a quantitation report page, a bracket encompassing the flags can be used, with a single entry of the initials and date. The department supervisor or a representative of the QA department must approve of all manual integrations performed on all initial and continuing calibration standards. This is documented by initialing and dating each page of the quantitation report of the raw data containing such manual integrations. See Attachment 9 for definitions of manual integration codes.

11.5.4 Non-target compounds are identified by comparing the resultant mass spectra from the non-target compounds to mass spectra contained in the National Institute of Standards and Technology (NIST) Mass Spectral Library. See Section 11.6.

11.6 Qualitative Analysis of Non-Target Compounds

11.6.1 Tentatively identify all compounds in the sample that have not already been identified as target compounds, or that are not surrogates, internal standards or semivolatile target compounds, by performing a computer-generated library search using the NIST 129K.1 mass spectral library (See Section 6.10.3). The library search must not be normalized.

11.6.2 Up to 30 tentatively identified compounds (TICs), including alkanes, of the greatest concentration are reported for each sample. The number of TICs required may vary, depending on project requirements.

11.6.3 Rules for making tentative identification:

11.6.3.1 TICs receiving a library search match of 85% or higher are considered a "probable match". Report the compound identified.

11.6.3.2 For TICs receiving more than one library search match of 85% or higher, report the compound with the highest percent match.

11.6.3.3 For TICs receiving two or more library search matches of 85% or higher with the same percent match, report the first compound.

11.6.3.4 For TICs that are isomers receiving library search matches of 85% or higher, report the compound with the highest percent match.

Note: If in the opinion the experienced analyst/data reviewer there is sound technical evidence not to identify the compound as specified in Sections 11.6.3.1 to 11.6.3.4 the justification must be documented in the narrative.

11.6.3.5 TICs receiving a library search match of < 85% are given a tentative identification by the analyst/data reviewer, if possible. If no identification can be made the TIC is reported as "unknown". If possible the unknown is further identified as part of a class of compounds (for example "unknown aromatic").

11.7 Quantitation

11.7.1 The mean relative response factor (RRF) from the initial calibration standard is used to calculate the concentration in the sample. For

NYSASP, the RRF from the continuing calibration standard is used to calculate concentrations.

Note: Alternatively, the calibration curve(s) generated from the initial calibration may be used for the determination of analyte(s) concentration(s). This option is discussed above.

11.7.2 All samples require a search of all extraneous peaks >10% of the height of the nearest internal standard, up to 10 searches, i.e. 10 most intense extraneous peaks. The number of searches may be more, depending on client requirements.

11.7.3 In each analytical run, all analytes must fall below the method's maximum analytical range, i.e. the highest calibration standard.

11.7.3.1 If an analyte is present at a concentration higher than the maximum analytical range in a 5g analysis, the medium level sample must be analyzed.

11.7.4 When a sample is analyzed that has saturated ions from a compound, this analysis must be followed by the analysis of an instrument blank or the following sample must be monitored for contamination and interference from carryover. If the blank or sample is not free from interferences, the system must be decontaminated. Sample analysis may not resume until a blank or sample has been analyzed which is free from interferences. Being free from interferences means that whatever compound was present above the initial calibration range in a sample, cannot be present in an instrument blank or the sample analyzed immediately following, at a level above the reporting limit for that compound.

11.7.5 Secondary ion quantitation is allowed only when there are sample matrix interferences with the primary ion. If secondary ion quantitation is performed, document the reasons in the SDG narrative.

11.7.6 Non-target compounds are quantified by comparing the MS response from the reconstructed ion chromatogram (RIC) for the non-target compound peaks to the MS response for a peak produced by the nearest internal standard compound. A response factor of 1 is assumed.

12.0 Data Analysis and Calculations

Calculations must be consistent with the Quality Control SOP 13.4, "Numerical Data Reduction".

12.1 Calculation of the mean or average of a set of values:

$$\overline{X} = \frac{\sum_{i=1}^{n} X_i}{n}$$

where: n = total number of values
x_i = each individual value used to calculate the mean
x = the mean of n

12.2 Calculation of the standard deviation of a set of values:

$$\text{Standard deviation} = \sqrt{\frac{\sum_{i=1}^{n}\left(X_n - \overline{X}\right)^2}{n-1}}$$

12.3 Calculation of percent recovery:

12.3.1 LCS and surrogates:

$$\%R = \frac{Amount\ found}{Amount\ spiked}\ x\,100$$

12.3.2 Matrix spikes:

$$\%\,\mathrm{R} = \frac{Amount\ in\ spiked\ sample - Amount\ in\ unspiked\ (native)\ sample}{Amount\ spiked}\ x\,100$$

12.4 Calculation of %RSD

$$\%\mathrm{RSD} = \left(\frac{Standard\ deviation}{\overline{\mathrm{X}}}\right) \times 100$$

12.5 Calculation of RPD

$$RPD = \frac{|Value\ 1\ -\ Value\ 2|}{\left(Value\ 1\ +\ Value\ 2\right)/2}\ x100$$

12.6 Calculation of %Difference (%D)

$$\%Diff = \frac{Value - \overline{Reference\ \ value}}{\overline{Reference\ \ value}} \times 100$$

12.7 Relative Response Factor

$$RRF = \frac{Ax \times C(is)}{A(is) \times Cx}$$

where: Ax = Area of the characteristic ion (EICP) for the compound to be measured
A(is) = Area of the characteristic ion (EICP) for the specific internal standard
C(is) = Concentration of the internal standard (in µg/l)
Cx = Concentration of the compound to be measured

12.8 Linear Calibration using Least Squares Regression

General linear equation: $y = ax + b$

where: y = Instrument response (peak area)
a = Slope of the line (coefficient of x)
x = Mass of the analyte in the calibration standard aliquot injected
b = y-intercept

Linear Regression by Least Squares:

$$y_1^{'} = ax_i + b$$

Where: b = intercept
x_i = Mass of the analyte in the ith calibration standard aliquot injected
$y_1^{'}$ = calculated response for the ith calibration standard

The sum of the squares of the differences is minimized to obtain a and b:

12.9 Correlation Coefficient r:

$$r = \frac{N\left[\sum_{i=1}^{N}(x_i y_i)\right] - \left[\sum_{i=1}^{N}(x_i)\right]\left[\sum_{i=1}^{N}(y_i)\right]}{\sqrt{N\left[\sum_{i=1}^{N}(x_i^2)\right] - \left[\sum_{i=1}^{N}(x_i)\right]^2} - \sqrt{N\left[\sum_{i=1}^{N}(y_i^2)\right] - \left[\sum_{i=1}^{N}(y_i)\right]^2}}$$

Where: r = Correlation Coefficient
N = number of data points (equals 5 in a 5 point curve)
y = response
i = index variable (first data point i = 1)
x = Mass of the analyte in the calibration standard aliquot injected

12.10 Quadratic Calibration (second order: $y = ax^2 + bx + c$) fit in Target

$$y = [n]\left[b + m^1\ (Rsp) + m^2\ (Rsp\text{^}2)\right]$$

where: b = constant
m^1 = multiplier for the unsquared term
m^2 = multiplier for the squared term
x = area of analyte/area of Internal Standard
n = amount of Internal Standard
y = amount in ng on column
Rsp = area of analyte/area of Internal Standard

12.11 Concentration

12.11.1 The area response of the characteristic ions in the extracted ion current profile (EICP) is tabulated against the concentration for each compound and internal standard.

12.11.2 Concentration of soil samples (dry weight basis) by GC/MS analysis using relative response factor:

$$ug/kg = \frac{(As)(Cis)}{(Ais)(\overline{RF})(Ws)(D)}$$

where: As = Area of the peak for the analyte in the sample
Ais = Area of the peak for the internal standard
Cis = Concentration of the internal standard in the volume purged, in µg/L

$\overline{RF}$ = Mean response factor from the initial calibration

$$\overline{RF} = \frac{\sum_{i=1}^{n} RFi}{n}$$

Ws = weight of sample purged, in grams

$$D\ (dry\ weight) = \frac{100 - \%\ moisture}{100}$$

12.11.3 Concentration of soil samples (dry weight basis) by GC/MS using quadratic (second order) fit in Target:

$$y = [n]\left[b + m^1\ (Rsp) + m^2\ (Rsp\text{^}2)\right]$$

where:
b = constant
m^1 = multiplier for the unsquared term
m^2 = multiplier for the squared term
n = amount of Internal Standard
y = concentration in ng on column
Rsp = area of analyte/area of Internal Standard

Example:
Area of acetone = 35659
Area of IS = 613275
b = -0.0909161
m^1 = 9.605304
m_2 = 7.132688
ng of IS = 250
response = 35659/613275 = 0.058145

Amount in ng on column =

$$(250ng)\left[-0.0909161 + 9.605304\ x\ 0.058145 + 7.132688\ x\ 0.058145\text{^}2\right] = 122.9ng$$

$$Concentration\ \mu g / Kg = \frac{122.9ng}{(Ws)(D)}$$

12.11.4 Concentration of soil samples (dry weight basis) by GC/MS using linear regression analysis:

$$\frac{A_s C_{is}}{A_{is}} = aC_s + b$$

$$C_s = \frac{\left[\frac{A_s C_{is}}{A_{is}} - b\right]}{a}$$

where:
As = Area of the target analyte peak in the sample
Ais = Area of the internal standard peak
Cs = Concentration of the target analyte in the calibration standard
Cis = Concentration of the internal standard
a = Slope of the line (coefficient of Cs)
b = The intercept

$$Concentration\ \mu g / Kg = \frac{(Cs)}{\mathbf{(Ws)}(D)}$$

12.11.5 Tentatively Identified Compound (TIC) Estimation

$$TIC\ Amount = \frac{(Area\ TIC)\ x\ Amount(Std)}{(Area\ IS)\ x\ 1(RF)(Ws)(D)}$$

where:	Area (TIC)	=	area response from RIC for non-target compound
	Amount(Std)	=	amount of internal standard added to the sample, in µg/L.
	Area (IS)	=	area response of the nearest internal standard in the reconstructed ion chromatogram
	1(RF)	=	assumed response factor of 1

12.12 Calculating Dilutions

12.12.1 If a sample concentration exceeds the high level standard a dilution must be performed. Determine a level of dilution that will result in a value within the upper half of the calibration range. This is an acceptable dilution.

12.12.2 Adjust the amount of sample purged with 1 gram being the lowest acceptable weight for a low level analysis. If the analyte still exceeds the analytical range in the medium level analysis, perform a methanol extraction following Sample Preparation Procedure –238, "Preparation

of Soil/Sediment/Sludge Samples for the Analysis of Volatile Organic Compounds by Closed-System Purge and Trap using SW846 Method 5035".

13.0 Method Performance

This method was validated through in-house laboratory studies of method detection limits and precision and accuracy for single analyst. The data are retained by the QA department.

14.0 Pollution Prevention

The solvents used in this procedure pose little threat to the environment when recycled and managed properly. Pollution prevention encompasses any technique that reduces or eliminates the quantity or toxicity of waste at the point of generation. Numerous opportunities for pollution prevention exist in laboratory operation. The EPA has established a preferred hierarchy of environmental management techniques that places pollution prevention as the management option of first choice. Whenever feasible, laboratory personnel should use pollution prevention techniques to address their waste generation. When wastes cannot be feasibly reduced at the source, the Agency recommends recycling as the next best thing. See SOP 12.1, "Hazardous Waste Disposal", regarding laboratory procedures for recycling solvent waste streams.

15.0 Waste Management

It is the laboratory's responsibility to comply with all federal, state, and local regulations governing waste management, particularly the hazardous waste identification rules and land disposal restrictions, and to protect the air, water, and land by minimizing and controlling all releases from fume hoods and bench operations. Compliance with all sewage discharge permits and regulations is also required.

Samples preserved with HCl, HNO_3, or H_2SO_4 to pH <2 are hazardous and must be neutralized before being disposed, or must be handled as hazardous waste.

Refer to the Hazardous Waste Management and Safety SOPs located in the lab.

16.0 References

16.1 Test Methods for Evaluating Solid Waste: Physical/Chemical Methods. U.S. EPA SW846 3rd Edition, Update 3, 12/96, Methods 8000C, 8260B and 5035A

16.2 Standard Methods for the Examination of Water and Wastewater, 20th Edition (1998), Method 1080

16.3 Code of Federal Register, 40 CFR, Part 136, "Guidelines for Establishing Test Procedures for Priority Pollutants"

16.4 QC SOP 13.6: "Proper Documentation Procedures"

16.5 QC SOP 13.4: "Numerical Data Reduction"

16.6 NELAC Standards, effective July 2003, plus revisions

16.7 QA/G6: Guidance for Preparing Standard Operating Procedures (SOPs) EPA/600/B-07/027, April 2007.

16.8 Department of Defense Quality Systems Manual for Environmental Laboratories, **Version 4.1, 4/22/2009**

16.9 CompuChem Quality Manual, **Revision 13, November 17, 2009, plus revisions**

16.10 Sample Control SOP 4.1, "Receiving Samples"

16.11 Sample Control SOP 4.6, "Storing Samples"

16.12 QC SOP 13.11, **"**Performing Annual Method Detection Limit (MDL) Studies**"**

16.13 Sample Preparation Procedure –238, "Preparation of Soil/Sediment/Sludge Samples for the Analysis of Volatile Organic Compounds by Closed-System Purge and Trap by SW-846 Method 5035A and EPA CLP SOW OLM04.3"

17.0 <u>Attachments as Tables, Diagrams, and Flowcharts</u>

17.1 Attachment 1 – Target Analyte List

17.2 Attachment 2 – In-house Statistical Control Limits

17.3 Attachment 3 – Target Analyte Reporting Limits

17.4 Attachment 4 – Instrument Run Log

17.5 Attachment 5 – Initial Calibration Standard Mixes

17.6 Attachment 6 – DOD-QSM LCS Control Limits

17.7 Attachment 7 – Second Source Initial Calibration Verification Standard Mixes

17.8 Attachment 8 – Definitions of Condition Codes

17.9 Attachment 9 – Definitions of Manual Integration Codes

ORIGINAL MASTER COPY CONTROLLED COPY
If words above are not highlighted, this is an uncontrolled copy of this document.

Attachment 1

Volatile Target Compounds

Compounds	Internal Standard	Primary Quantitation Ion	Secondary Quantitation Ion(s)
dichlorodifluoromethane	1	85	87
chloromethane	1	50	52
vinyl chloride	1	62	64
bromomethane	1	94	96
chloroethane	1	64	66
trichlorofluoromethane	1	101	103
1,1-dichloroethene	1	96	61, 98
methylene chloride	1	84	49, 86
trans-1,2-dichloroethene	1	96	61, 98
1,1-dichloroethane	1	63	65, 83
2,2-dichloropropane	1	77	97
cis-1,2-dichloroethene	1	96	61, 98
bromochloromethane	1	128	49, 130
chloroform	1	83	85
1,1,1-trichloroethane	1	97	99, 61
carbon tetrachloride	1	117	119, 121
1,1-dichloropropene	1	75	110, 77
benzene	1	78	77, 51
1,2-dichloroethane	1	62	98
trichloroethene	1	130	95, 97
1,2-dichloropropane	1	63	112
dibromomethane	1	174	93, 95
bromodichloromethane	1	83	85, 127
2-chloroethyl vinyl ether	1	63	65, 106
cis-1,3-dichloropropene	1	75	77
acrolein	1	56	55, 58
iodomethane	1	142	127, 141
1,1,1-trichloro-2,2,2,-trifluoroethane	1	117	151, 153
1,1,2-trichloro-1,2,2,-trifluoroethane	1	85	101, 151
carbon disulfide	1	76	78
acetone	1	43	58
3-chloropropene	1	76	41, 78
acetonitrile	1	41	40, 39

ORIGINAL MASTER COPY CONTROLLED COPY
If words above are not highlighted, this is an uncontrolled copy of this document.

Attachment 1 (continued)

Volatile Target Compounds

Compounds	Internal Standard	Primary Quantitation Ion	Secondary Quantitation Ion(s)
Acrylonitrile	1	53	52, 51
Methyl-tert-butyl ether	1	73	41, 43
Vinyl acetate	1	43	86
2-Butanone	1	72	43, 57
Propionitrile	1	54	55, 52
Methacrylonitrile	1	41	39, 67
1-Chlorobutane	1	56	49
1,4-Dioxane	1	88	58
Methylmethacrylate	1	69	100, 41
Dibromofluoromethane: Surrogate #1	1	113	111, 192
1,2-Dichloroethane-d_4: Surrogate #2	1	65	102, 67
4-Methyl-2-pentanone	2	43	85, 100
Toluene	2	92	91
trans-1,3-Dichloropropene	2	75	77
1,1,2-Trichloroethane	2	97	83, 85
Ethylmethacrylate	2	69	41, 99
Tetrachloroethene	2	164	168, 129
1,3-Dichloropropane	2	76	78
2-Hexanone	2	43	58, 57
Dibromochloromethane	2	129	127, 48
1,2-Dibromoethane	2	107	109, 188
Chlorobenzene	2	112	114, 77
1,1,1,2-Tetrachloroethane	2	131	119, 133
Ethylbenzene	2	106	91
m,p-Xylene	2	106	91
o-Xylene	2	106	91
Styrene	2	104	91, 78
Bromoform	2	173	175, 254
Isopropyl benzene	2	105	120
Bromobenzene	2	156	77,158
1,1,2,2-Tetrachloroethane	2	83	85, 131

ORIGINAL MASTER COPY CONTROLLED COPY
If words above are not highlighted, this is an uncontrolled copy of this document.

Attachment 1 (continued)

Volatile Target Compounds

Compounds	Internal Standard	Primary Quantitation Ion	Secondary Quantitation Ion(s)
1,2,3-Trichloropropane	2	110	75, 112
trans-1,4-Dichloro-2-butene	2	53	88, 75
Toluene-d_8: Surrogate #3	2	98	70, 100
n-Propyl benzene	3	91	120
2-Chlorotoluene	3	126	91
4-Chlorotoluene	3	91	126
1,2,4-Trimethyl benzene	3	105	120
1,3,5-Trimethyl benzene	3	105	120
Pentachloroethane	3	167	130, 165
sec-Butyl benzene	3	105	134
1,2-Dichlorobenzene	3	146	111, 148
1,3-Dichlorobenzene	3	146	111, 148
1,4-Dichlorobenzene	3	146	111, 148
n-Butyl benzene	3	91	92, 134
tert-Butyl benzene	3	119	91, 134
p-Isopropyl toluene	3	119	134, 91
1,2-Dibromo-3-chloropropane	3	75	155, 157
1,2,4-Trichlorobenzene	3	180	182, 145
Hexachlorobutadiene	3	225	223, 227
Naphthalene	3	128	64, 51
1,2,3-Trichlorobenzene	3	180	182, 145
4-Bromofluorobenzene: Surrogate #4	3	95	174, 176
Fluorobenzene: Internal Standard #1	NA	96	70
Chlorobenzene-d_5: Internal Standard #2	NA	117	82, 119
1,4-Dichlorobenzene-d_4:Internal Standard #3	NA	152	150

[1] Based on laboratory tests, 2-chloroethyl vinyl ether is not analyzable from the sodium bisulfate solution associated with Method 5035.

Attachment 2

Statistical Control Limits for the LCS

Compound	Percent Recovery Range 5 gram soil
Dichlorodifluoromethane	50-142
Chloromethane	52-150
Vinyl chloride [2]	58-148
Bromomethane	50-150
Chloroethane	52-150
Trichlorofluoromethane	54-144
Acrolein	50-150
1,1-Dichloroethene [1, 2]	51-146
Iodomethane	50-150
1,1,1-Trichloro-2,2,2,-trifluoroethane	58-148
Carbon disulfide	56-140
1,1,2-Trichloro-1,2,2,-trifluoroethane	50-149
Acetone	50-147
3-Chloropropene	50-150
Acetonitrile	68-126
Methyl acetate	50-150
Methylene chloride [2]	50-137
trans-1,2-dichloroethene	65-122
Acrylonitrile	50-136
Methyl-tert-butyl ether	70-133
Tert butyl alcohol	60-148
n-Hexane	50-143
1,1-Dichloroethane [2]	66-123
Chloroprene	50-150
Vinyl acetate	50-150
Isopropyl ether	81-114
2,2-Dichloropropane	64-141
cis-1,2-Dichloroethene [2]	69-127
2-Butanone [2]	66-132
Propionitrile	50-150
Bromochloromethane	73-126
Methyl acrylate	50-133
Methacrylonitrile	51-127
Tetrahydrofuran	50-150

Attachment 2 (continued)

Statistical Control Limits for the LCS

Compound	Percent Recovery Range 5 gram soil
Chloroform	75-128
1,1,1-trichloroethane	71-127
Cyclohexane	65-126
Carbon tetrachloride [2]	67-132
1,1-Dichloropropene	72-132
Benzene [1, 2]	67-126
1,2-Dichloroethane	56-141
Isobutyl alcohol	50-150
Trichloroethene [1, 2]	69-130
Methylcyclohexane	80-119
1,2-Dichloropropane [2]	73-121
Dibromomethane	64-131
1,4-Dioxane	50-150
Methylmethacrylate	60-127
Bromodichloromethane [2]	75-133
2-Chloroethyl vinyl ether	50-150
cis-1,3-Dichloropropene	87-127
4-Methyl-2-pentanone	67-125
Toluene [1]	73-121
trans-1,3-Dichloropropene	64-131
1,1,2-Trichloroethane	67-123
Ethylmethacrylate	67-124
Tetrachloroethene [2]	72-130
1,3-Dichloropropane	75-130
2-Hexanone	51-128
Dibromochloromethane	68-127
1,2-Dibromoethane	69-127
Chlorobenzene [1, 2]	71-120
1-Chlorohexane	80-113
1,1,1,2-Tetrachloroethane	82-120
Ethylbenzene [2]	76-121
m,p-Xylene	76-130

Attachment 2 (continued)

Statistical Control Limits for the LCS

Compounds	Percent Recovery Range 5 gram soil
o-Xylene	76-130
Styrene [2]	68-126
Bromoform [2]	64-134
Isopropyl benzene	68-126
Bromobenzene	67-140
1,2,3-Trichloropropane	58-137
1,1,2,2-Tetrachloroethane	66-128
trans-1,4-Dichloro-2-butene	50-150
n-Propylbenzene	71-136
2-Chlorotoluene	78-124
4-Chlorotoluene	74-131
1,3,5-Trimethyl benzene	72-129
Pentachloroethane	64-150
tert-Butyl benzene	67-140
1,2,4-Trimethyl benzene	70-133
sec-Butyl benzene	67-141
1,3-Dichlorobenzene	74-119
1,4-Dichlorobenzene [2]	72-115
p-Isopropyl toluene	74-132
1,2-Dichlorobenzene	67-126
n-Butyl benzene	63-137
1,2-Diethylbenzene	75-117
1,2-Dibromo-3-chloropropane	72-127
1,2,4-Trichlorobenzene	57-133
Hexachlorobutadiene	68-129
Naphthalene	50-139
1,2,3-Trichlorobenzene	63-129
Xylene (total)	76-130

Table displays statistical control limits calculated in 2002.

[1] Denotes component of minimum LCS spike
[2] Denotes component of LCS spike for SC DHEC. Each of these analytes must be recovered within 70 - 130%.

Attachment 3

8260B Compounds and Reporting Limits

CAS#	Compound	5 grams (µg/Kg)
630-20-6	1,1,1,2-Tetrachloroethane	5
354-58-5	1,1,1-Trichloro-2,2,2-trifluoroethane	5
71-55-6	1,1,1,-Trichloroethane	5
79-34-5	1,1,2,2-Tetrachloroethane	5
76-13-1	1,1,2-Trichloro-1,2,2-trifluoroethane	5
79-00-5	1,1,2-Trichloroethane	5
75-34-3	1,1-Dichloroethane	5
75-35-4	1,1-Dichloroethene	5
563-58-6	1,1-Dichloropropene	5
544-10-5	1-Chlorobenzene	5
87-61-6	1,2,3-Trichlorobenzene	5
96-18-4	1,2,3-Trichloropropane	5
120-82-1	1,2,4-Trichlorobenzene	5
95-63-6	1,2,4-Trimethylbenzene	5
96-12-8	1,2-Dibromo-3-Chloropropane	5
106-93-4	1,2-Dibromoethane	5
95-50-1	1,2-Dichlorobenzene	5
107-06-2	1,2-Dichloroethane	5
78-87-5	1,2-Dichloropropane	5
108-67-8	1,3,5-Trimethylbenzene	5
541-73-1	1,3-Dichlorobenzene	5
142-28-9	1,3-Dichloropropane	5
106-46-7	1,4-Dichlorobenzene	5
123-91-1	1,4-Dioxane	250
594-20-7	2,2-Dichloropropane	5
78-93-3	2-Butanone	12.5
110-75-8	2-Chloroethyl vinyl ether	5
95-49-8	2-Chlorotoluene	5
591-78-6	2-Hexanone	12.5
107-05-1	3-Chloropropene	5
106-43-4	4-Chlorotoluene	5
108-10-1	4-Methyl-2-pentanone	12.5
67-64-1	Acetone	12.5
75-05-8	Acetonitrile	5
107-02-8	Acrolein	50

Attachment 3 (continued)

8260B Compounds and Reporting Limits

CAS#	Compound	5 grams µg/Kg
107-13-1	Acrylonitrile	50
71-43-2	Benzene	5
108-86-1	Bromobenzene	5
74-97-5	Bromochloromethane	5
75-27-4	Bromodichloromethane	5
75-25-2	Bromoform	5
74-83-9	Bromomethane	5
75-15-0	Carbon disulfide	5
56-23-5	Carbon Tetrachloride	5
108-90-7	Chlorobenzene	5
75-00-3	Chloroethane	5
67-66-3	Chloroform	5
74-87-3	Chloromethane	5
126-99-8	Chloroprene	5
156-59-2	cis-1,2-Dichloroethene	5
10061-01-5	cis-1,3-Dichloropropene	5
110-82-7	Cyclohexane	5
124-48-1	Dibromochloromethane	5
74-95-3	Dibromomethane	5
75-71-8	Dichlorodifluoromethane	5
100-41-4	Ethylbenzene	5
97-63-2	Ethylmethacrylate	50
87-68-3	Hexachlorobutadiene	5
74-88-4	Iodomethane	5
78-83-1	Isobutyl alcohol	250
89-82-8	Isopropyl Benzene	5
108-20-3	Isopropyl ether	5
108-38-3	m,p-Xylene	10
126-89-7	Methacrylonitrile	50
79-20-9	Methyl acetate	5
108-87-2	Methylcyclohexane	5
75-09-2	Methylene Chloride	5
80-62-6	Methylmethacrylate	50
1634-04-4	Methyl-tert-butyl ether	5
91-20-3	Naphthalene	5
104-51-8	n-Butyl benzene	5
110-54-3	n-Hexane	5

ORIGINAL MASTER COPY CONTROLLED COPY
If words above are not highlighted, this is an uncontrolled copy of this document.

Attachment 3 (continued)

8260B Compounds and Reporting Limits

CAS#	Compound	5 grams µg/Kg
103-65-1	n-Propyl benzene	5
95-47-6	o-Xylene	5
76-01-7	Pentachloroethane	5
99-87-6	p-Isopropyl Toluene	5
107-12-0	Propionitrile	250
135-98-8	sec-Butyl benzene	5
100-42-5	Styrene	5
75-65-0	Tert-Butyl alcohol	5
98-06-6	tert-Butyl benzene	5
127-18-4	Tetrachloroethene	5
109-99-9	Tetrahydrofuran	20
108-88-3	Toluene	5
156-60-5	trans-1,2-Dichloroethene	5
10061-02-6	trans-1,3-Dichloropropene	5
110-57-6	trans-1,4-Dichloro-2-butene	20
79-01-6	Trichloroethene	5
75-69-4	Trichlorofluoromethane	5
108-05-4	Vinyl acetate	5
75-01-4	Vinyl Chloride	5
1330-20-7	Xylene (total)	15

ORIGINAL MASTER COPY CONTROLLED COPY
If words above are not highlighted, this is an uncontrolled copy of this document.

Attachment 4

COMPUCHEM a Division of Liberty Analytical Corp DATE ___/___/___ INITIAL TIME OF TUNE_____ SHIFT/S(A)_____(B)_____(C)____
GC/MS VOLATILE RUN LOG TIME TUNE EXPIRES_____ LINKER /METHOD_____
COMPUCHEM LOGBOOK 11 NNN 29 (5972hp59) METHOD: 8260B SOM01.2 (Circle one) or Other: _____
MAINTENANCE_____

	REJECTED	FILE NAME	REPORTED	pH	Vial	DATE	TIME	Client ID	SDG#	INJ. VOL.*	DF+	CHEMIST	COMMENTS (ETC.)/ DISPOSITION
1						/ /							
2						/ /							
3						/ /							
4						/ /							
5						/ /							
6						/ /							
7						/ /							
8						/ /							
9						/ /							
10						/ /							
11						/ /							
12						/ /							
13						/ /							
14						/ /							
15						/ /							
16						/ /							
17						/ /							
18						/ /							
19						/ /							
20						/ /							
21						/ /							
22						/ /							
23						/ /							
24						/ /							

*On-column sample aliquot +Not applicable to soil matrix

The presence of the Chemist's/Analyst's employee ID number, or signature, on this run log attests that strict compliance with the method's SOP has occurred. Any SOP deviations require documentation by the responsible chemist/analyst together with the chemist's/analyst's initials and the initials of the lab supervisor and a QA department representative, signifying approval of the deviation

Tune (ID #7008) Lot No.: _____ Calibration Group Code / Lot No.: _____
Internal Standard Lot No.: _____ Surrogate Lot No.: _____

REVIEWED BY: _____ Date_____

4/05/10: jad

Note: This page subject to change without notice.

Attachment 5

TCL4 1&2 HIGH

RESTEK

CERTIFICATE OF ANALYSIS

110 Benner Circle
Bellefonte, PA 16823-8812
Tel.: (800)356-1688
Fax: (814)353-1309

FOR LABORATORY USE ONLY–READ MSDS PRIOR TO USE.

Cat. No.: 30431 Lot No.: A027506
Description: 502.2 CAL 2000 Mega-Mix
Expiration Date[1]: August 2005 Storage: Freezer

Compound	CAS#	Percent Purity[3]	Concentration (weight/volume)[4]	Percent Uncertainty[5]
1,1-dichloroethane	75-34-3	99%	2,000 µg/ml	+/- .04%
1,1-dichloroethene	75-35-4	99%	2,000 µg/ml	+/- .04%
1,1-dichloropropene	563-58-6	99%	2,000 µg/ml	+/- .04%
1,1,1-trichloroethane	71-55-6	99%	2,000 µg/ml	+/- .04%
1,1,1,2-tetrachloroethane	630-20-6	99%	2,000 µg/ml	+/- .04%
1,1,2-trichloroethane	79-00-5	99%	2,000 µg/ml	+/- .04%
1,1,2,2-tetrachloroethane	79-34-5	99%	2,000 µg/ml	+/- .04%
1,2-dibromo-3-chloropropane	96-12-8	97%	2,000 µg/ml	+/- .04%
1,2-dibromoethane	106-93-4	99%	2,000 µg/ml	+/- .04%
1,2-dichlorobenzene	95-50-1	99%	2,000 µg/ml	+/- .04%
1,2-dichloroethane	107-06-2	99%	2,000 µg/ml	+/- .04%
1,2-dichloropropane	78-87-5	99%	2,000 µg/ml	+/- .04%
1,2,3-trichlorobenzene	87-61-6	99%	2,000 µg/ml	+/- .04%
1,2,3-trichloropropane	96-18-4	99%	2,000 µg/ml	+/- .04%
1,2,4-trichlorobenzene	120-82-1	99%	2,000 µg/ml	+/- .04%
1,2,4-trimethylbenzene	95-63-6	99%	2,000 µg/ml	+/- .04%
1,3-dichlorobenzene	541-73-1	99%	2,000 µg/ml	+/- .04%
1,3-dichloropropane	142-28-9	99%	2,000 µg/ml	+/- .04%
1,3,5-trimethylbenzene	108-67-8	99%	2,000 µg/ml	+/- .04%
1,4-dichlorobenzene	106-46-7	99%	2,000 µg/ml	+/- .04%
2-chlorotoluene	95-49-8	99%	2,000 µg/ml	+/- .04%
2,2-dichloropropane	594-20-7	99%	2,000 µg/ml	+/- .04%
4-chlorotoluene	106-43-4	99%	2,000 µg/ml	+/- .04%
p-isopropyltoluene	99-87-6	99%	2,000 µg/ml	+/- .04%
benzene	71-43-2	99%	2,000 µg/ml	+/- .04%
bromobenzene	108-86-1	99%	2,000 µg/ml	+/- .04%
bromochloromethane	74-97-5	99%	2,000 µg/ml	+/- .04%

[1]Expiration date of the unopened ampul stored at recommended temperature.
[2]Listed in alphabetical order.
[3]Purity was determined by one or more of the following techniques: GC/FID, HPLC, GC/ECD, GC/MS. Value rounded to the nearest LOWER whole percentage. In addition to detectors listed above, chemical identity and purity are confirmed using 1 or more of the following: MS, DSC, solid probe MS, GC/FPD, GC/NPD, GC/TC, FTIR, melting point, refractive index, and Karl Fisher. See data pack or contact Restek for further details.
[4]Based upon gravimetric preparation with balance calibration verified using NIST traceable weights (seven mass levels).
[5]Percent uncertainty based upon balance AND ASTM Class A volumetric glassware accuracy.

ISO 9001 REGISTERED RESTEK QUALITY SEPARATES US FROM THE REST

MANUFACTURED UNDER RESTEK'S ISO 9001 REGISTERED QUALITY SYSTEM: Certificate #97-HOU-AQ-8550 Issued by DNV Certification, Inc.

Attachment 5 (continued)

TCL4 1&2 HIGH

RESTEK

CERTIFICATE OF ANALYSIS (cont.)

FOR LABORATORY USE ONLY–READ MSDS PRIOR TO USE.

PAGE 2

Cat. No.: 30431 Lot No.: A027506

Description: 502.2 CAL 2000 Mega-Mix

Compound	CAS#	Percent Purity[3]	Concentration (weight/volume)[4]	Percent Uncertainty[5]
bromodichloromethane	75-27-4	99%	2,000 µg/ml	+/- .04%
bromoform	75-25-2	99%	2,000 µg/ml	+/- .04%
carbon tetrachloride	56-23-5	99%	2,000 µg/ml	+/- .04%
chlorobenzene	108-90-7	99%	2,000 µg/ml	+/- .04%
chloroform	67-66-3	99%	2,000 µg/ml	+/- .04%
cis-1,2-dichloroethene	156-59-2	99%	2,000 µg/ml	+/- .04%
cis-1,3-dichloropropene	10061-01-5	99%	2,000 µg/ml	+/- .04%
dibromochloromethane	124-48-1	99%	2,000 µg/ml	+/- .04%
dibromomethane	74-95-3	99%	2,000 µg/ml	+/- .04%
ethylbenzene	100-41-4	99%	2,000 µg/ml	+/- .04%
hexachlorobutadiene	87-68-3	99%	2,000 µg/ml	+/- .04%
isopropylbenzene	98-82-8	99%	2,000 µg/ml	+/- .04%
methylene chloride	75-09-2	99%	2,000 µg/ml	+/- .04%
m-xylene	108-38-3	99%	2,000 µg/ml	+/- .04%
naphthalene	91-20-3	99%	2,000 µg/ml	+/- .04%
n-butylbenzene	104-51-8	99%	2,000 µg/ml	+/- .04%
n-propylbenzene	103-65-1	99%	2,000 µg/ml	+/- .04%
o-xylene	95-47-6	99%	2,000 µg/ml	+/- .04%
p-xylene	106-42-3	99%	2,000 µg/ml	+/- .04%
sec-butylbenzene	135-98-8	99%	2,000 µg/ml	+/- .04%
styrene	100-42-5	99%	2,000 µg/ml	+/- .04%
tetrachloroethene	127-18-4	99%	2,000 µg/ml	+/- .04%
tert-butylbenzene	98-06-6	99%	2,000 µg/ml	+/- .04%
toluene	108-88-3	99%	2,000 µg/ml	+/- .04%
trans-1,2-dichloroethene	156-60-5	99%	2,000 µg/ml	+/- .04%
trans-1,3-dichloropropene	10061-02-6	97%	2,000 µg/ml	+/- .04%
trichloroethene	79-01-6	99%	2,000 µg/ml	+/- .04%
Solvent: purge & trap methanol	67-56-1	99%		

[1]*Expiration date of the unopened ampul stored at recommended temperature.*

[2]*Listed in alphabetical order.*

[3]*Purity was determined by one or more of the following techniques: GC/FID, HPLC, GC/ECD, GC/MS. Value rounded to the nearest LOWER whole percentage. In addition to detectors listed above, chemical identity and purity are confirmed using 1 or more of the following: MS, DSC, solid probe MS, GC/FPD, GC/NPD, GC/TC, FTIR, melting point, refractive index, and Karl Fisher. See data pack or contact Restek for further details.*

[4]*Based upon gravimetric preparation with balance calibration verified using NIST traceable weights (seven mass levels).*

Attachment 5 (continued)

TCL4 - GASES HIGH

RESTEK

CERTIFICATE OF ANALYSIS

110 Benner Circle
Bellefonte, PA 16823-8812
Tel.: (800)356-1688
Fax: (814)353-1309

FOR LABORATORY USE ONLY--READ MSDS PRIOR TO USE.

Cat. No.: 30042 Lot No.: A028050
Description: 502.2 Calibration Mix #1
Expiration Date[1]: March 2010 Storage: Freezer

Elution Order	Compound	CAS#	Percent Purity[3]	Concentration (weight/volume)[4]	Percent Uncertainty[5]
1	Dichlorodifluoromethane	75-71-8	99%	1,997 µg/ml	± 1.9%
2	Chloromethane	74-87-3	99%	2,003 µg/ml	± 1.3%
3	Vinyl chloride	75-01-4	99%	2,003 µg/ml	± 1.4%
4	Bromomethane	74-83-9	99%	1,997 µg/ml	± 1.3%
5	Chloroethane	75-00-3	99%	2,003 µg/ml	± 1.5%
6	Trichlorofluoromethane	75-69-4	99%	2,000 µg/ml	± 0.3%
Solvent:	Purge and trap Methanol	67-56-1	99%		

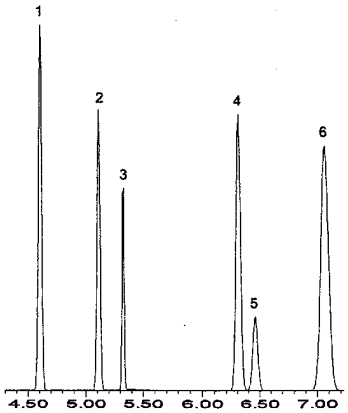

Column: 105m .32mm 1.8µm
Rtx-502.2 (cat.#10921)
Carrier gas: helium @ 2.2 ml/min.
Temp. program: 50°C (hold 12 min.)
Isothermal
Inj. temp.: 240°C
Det. temp.: 240°C
Detector type: MSD

John Lidgett
John Lidgett—QA Analyst

[1]Expiration date of the unopened ampul stored at recommended temperature.
[2]Listed in alphabetical order.
[3]Purity was determined by one or more of the following techniques: GC/FID, HPLC, GC/ECD, GC/MS. Value rounded to the nearest LOWER whole percentage. In addition to detectors listed above, chemical identity and purity are confirmed using 1 or more of the following: MS, DSC, solid probe MS, GC/FPD, GC/NPD, GC/TC, FTIR, melting point, refractive index, and Karl Fisher. See data pack or contact Restek for further details.
[4]Based upon gravimetric preparation with balance calibration verified using NIST traceable weights (seven mass levels).
[5]Percent uncertainty based upon balance AND ASTM Class A volumetric glassware accuracy.

ISO 9001 REGISTERED RESTEK QUALITY SEPARATES US FROM THE REST

MANUFACTURED UNDER RESTEK'S ISO 9001 REGISTERED QUALITY SYSTEM: Certificate #97-HOU-AQ-8550 issued by DNV Certification, Inc.

Attachment 5 (continued)

.TCL4 - KETONES

125 Market Street
New Haven, CT 06513
USA

AccuStandard, Inc.

Tel (203)786-5290
Fax (203)786-5287
Website AccuStandard.com

CERTIFICATE OF ANALYSIS

CATALOG NO: S-9863-R3
DESCRIPTION: Custom VOA Std #2
LOT: 209051016
SOLVENT: Methanol

EXPIRATION: Sep 6, 2009

See reverse for additional certification information.

This product is guaranteed accurate to ± 0.5% of the Certified Analyte concentration through the Expiration Date on the Label.

Component	CAS #	Purity % (GC/FID)	Prepared Concentration[1] (µg/mL)	Certified Analyte Concentration[2] (µg/mL)
Acetone	67-64-1	100	1252	1252
Methyl ethyl ketone	78-93-3	99.9	1252	1251
4-methyl-2-pentanone	108-10-1	100	1252	1252
2-hexanone	591-78-6	99.4	1252	1244
Vinyl acetate	108-05-4	99.9	500.3	499.8
2-Chloroethylvinyl ether	110-75-8	99.5	500.0	497.5

6 Components

AccuStandard

1. All weights are traceable through NIST, Test No. 822/272103-05

2. Certified Analyte Concentration = Purity x Prepared Concentration. The Uncertainty calculated for this product is ±4% which is the Combined Uncertainty uc(y). It represents an estimated standard deviation equal to the positive square root of the total variance of the uncertainty of components. The Expanded Uncertainty is U which is Uc(y) *K where K is the coverage factor at the 95% confidence level (K=2).

3. A product with a suffix (-1A, -2B, etc.) on its lot# has had its expiration date extended and is identical to the same lot# without the suffix.

Certified by: R. Cooper

AccuStandard is accredited to ISO/IEC 17025:2005 and certified to ISO 9001:2000

OR-ORG/INO-001
Rev. 9/08

Attachment 5 (continued)

TCL4 – APPIX

125 Market Street
New Haven, CT 06513
USA

AccuStandard, Inc.

Tel (203)786-5290
Fax (203)786-5287
Website AccuStandard.com

CERTIFICATE OF ANALYSIS

CATALOG NO: S-9862-R2
DESCRIPTION: Custom VOA Std #1
LOT: B9020309
SOLVENT: Methanol

EXPIRATION: Jul 4, 2009

See reverse for additional certification information.

This product is guaranteed accurate to ± 0.5% of the Certified Analyte concentration through the Expiration Date on the Label.

Component	CAS #	Purity % (GC/FID)	Prepared Concentration[1] (mg/mL)	Certified Analyte Concentration[2] (mg/mL)
Acetonitrile	75-05-8	99.9	0.504	.503
Allyl chloride	107-05-1	99.1	0.505	.500
1-Chlorohexane	544-10-5	99.0	0.505	.500
Chloroprene	126-99-8	97.0	0.520 *	.504
trans-1,4-Dichloro-2-butene	110-57-6	100	2.002	2.002
p-Dioxane	123-91-1	99.7	25.004	24.929
Ethyl methacrylate	97-63-2	99.5	5.002	[illegible]
Isobutyl alcohol	78-83-1	100	25.008	25.[illegible]
Methacrylonitrile	126-98-7	100	5.003	5.00[illegible]
Methyl iodide	74-88-4	99.5	0.504	.50[illegible]
Methyl methacrylate	80-62-6	99.8	5.002	[illegible]
Pentachloroethane	76-01-7	95.4	0.528 *	.504
Propionitrile	107-12-0	98.9	25.[illegible]	24.733
Acrolein	107-02-8	90.0	[illegible]	5.015
Acrylonitrile	107-13-1	99.8	[illegible]	4.991

15 Components

1. All weights are traceable through NIST, Test No. 822/272103-05
2. Certified Analyte Concentration = Purity x Prepared Concentration. The Uncertainty calculated for this product is ±4% which is the Combined Uncertainty uc(y). It represents an estimated standard deviation equal to the positive square root of the total variance of the uncertainty of components. The Expanded Uncertainty is U which is Uc(y) *K where K is the coverage factor at the 95% confidence level (K=2).
3. A product with a suffix (-1A, -2B, etc.) on its lot# has had its expiration date extended and identical to the same lot# without the suffix.

* Weight compensated to 100% purity

Certified by: R. Cooper

AccuStandard is accredited to ISO/IEC 17025:2005 and certified to ISO 9001:2000

OR-ORG/INO-001
Rev. 9/08

AccuStandard

Attachment 5 (continued)

TCL4 1&2 Additions
received 10 vials 12-19-08

RESTEK

Certificate of Composition

110 Benner Circle
Bellefonte, PA 16823-8812
Tel: (800)356-1688
Fax: (814)353-1309

FOR LABORATORY USE ONLY-READ MSDS PRIOR TO USE.

Catalog No. : 557093 **Lot No.:** A064665
Description : Custom 502.2 Additions Mix
Expiration Date[1]: December 2009 **Storage:** Freezer

Elution Order	Compound	CAS #	Percent Purity [2]	Concentration [3] (weight/volume)	Percent Uncertainty [4]
1	1,1,2-Trichlorotrifluoroethane	76-13-1	97%	2,000.140 ug/ml	+/-0.08 %
2	1,1,1-Trichlorotrifluoroethane	354-58-5	98%	2,000.180 ug/ml	+/-0.08 %
3	Methyl acetate	79-20-9	99%	2,000.000 ug/ml	+/-0.08 %
4	Carbon disulfide	75-15-0	99%	2,000.000 ug/ml	+/-0.08 %
5	Methyl-tert-butyl ether (MTBE)	1634-04-4	99%	2,000.000 ug/ml	+/-0.08 %
6	Diisopropyl ether (DIPE)	108-20-3	99%	2,000.000 ug/ml	+/-0.08 %
7	Cyclohexane	110-82-7	99%	2,000.000 ug/ml	+/-0.08 %
8	Methylcyclohexane	108-87-2	99%	2,000.000 ug/ml	+/-0.08 %
Solvent:	P&T Methanol	67-56-1	99%		

Column: 105m x .32mm x 1.8um Rtx-502.2 (cat.#10921)
Carrier Gas: helium @ 2.2 ml/min.
Temp. Program: 40°C (hold 2 min.) to 240°C @ 8°C/min.
Inj. Temp: 200°C
Det. Temp: 250°C
Det. Type: MSD

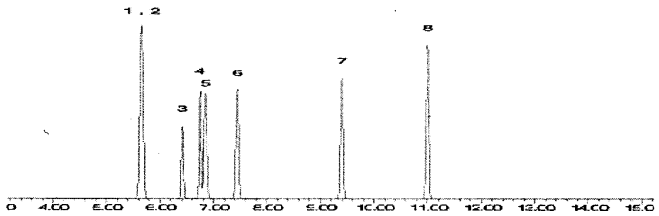

Adam K Clark

Balance: 1125113331

Manufactured under Restek's ISO 9001:2000 Registered Quality System Certificate #FM80397

1 Expiration date of the unopened ampul stored at recommended temperature.
2 Purity was determined by one or more of the following techniques: GC/FID, HPLC, GC/ECD, GC/MS. Value rounded to the nearest LOWER whole percentage. In addition to detectors listed above, chemical identity and purity are confirmed using 1 or more of the following: MS, DSC, solid probe MS, GC/FPD, GC/NPD, GC/TC, FTIR, melting point, refractive index, and Karl Fisher. See data pack or contact Restek for further details.
3 Based upon gravimetric preperation with balance calibration verified using NIST traceable weights (seven mass levels).
4 Percent Uncertainty based upon balance AND ASTM Class A volumetric glassware accuracy.

Attachment 6
DOD-QSM LCS Control Limits and Marginal Exceedances

CAS#	Volatile Compound	Soil CL	Soil ME
630-20-6	1,1,1,2-Tetrachloroethane	75-125	65-135
71-55-6	1,1,1,-Trichloroethane	70-135	55-145
79-34-5	1,1,2,2-Tetrachloroethane	55-130	40-145
79-00-5	1,1,2-Trichloroethane	60-125	50-140
75-34-3	1,1-Dichloroethane	75-125	65-135
75-35-4	1,1-Dichloroethene	65-135	55-150
563-58-6	1,1-Dichloropropene	70-135	60-145
87-61-6	1,2,3-Trichlorobenzene	60-135	50-145
96-18-4	1,2,3-Trichloropropane	65-130	50-140
120-82-1	1,2,4-Trichlorobenzene	65-130	55-140
95-63-6	1,2,4-Trimethylbenzene	65-135	55-145
96-12-8	1,2-Dibromo-3-Chloropropane	40-135	25-150
106-93-4	1,2-Dibromoethane	70-125	60-135
95-50-1	1,2-Dichlorobenzene	75-120	65-125
107-06-2	1,2-Dichloroethane	70-135	60-145
78-87-5	1,2-Dichloropropane	70-120	65-125
108-67-8	1,3,5-Trimethylbenzene	65-135	55-145
541-73-1	1,3-Dichlorobenzene	70-125	65-135
142-28-9	1,3-Dichloropropane	75-125	70-130
106-46-7	1,4-Dichlorobenzene	70-125	65-135
594-20-7	2,2-Dichloropropane	65-135	55-145
78-93-3	2-Butanone	30-160	10-180
95-49-8	2-Chlorotoluene	70-130	60-140
591-78-6	2-Hexanone	45-145	30-160
106-43-4	4-Chlorotoluene	75-125	65-135
108-10-1	4-Methyl-2-pentanone	45-145	30-165
67-64-1	Acetone	20-160	10-180
71-43-2	Benzene	75-125	65-135
108-86-1	Bromobenzene	65-120	55-130
74-97-5	Bromochloromethane	70-125	60-135
75-27-4	Bromodichloromethane	70-130	60-135
75-25-2	Bromoform	55-135	45-150
74-83-9	Bromomethane	30-160	10-180
75-15-0	Carbon Disulfide	45-160	30-180
56-23-5	Carbon Tetrachloride	65-135	55-145
108-90-7	Chlorobenzene	75-125	65-130
75-00-3	Chloroethane	40-155	20-175
67-66-3	Chloroform	70-125	65-135
74-87-3	Chloromethane	50-130	40-140
156-59-2	cis-1,2-Dichloroethane	65-125	55-135
10061-01-5	cis-1,3-Dichloropropene	70-125	65-135
124-48-1	Dibromochloromethane	65-130	55-140
74-95-3	Dibromomethane	75-130	65-135
75-71-8	Dichlorodifluoromethane	35-135	15-155

ORIGINAL MASTER COPY CONTROLLED COPY
If words above are not highlighted, this is an uncontrolled copy of this document.

Attachment 6 (continued)
DOD-QSM LCS Control Limits and Marginal Exceedances

CAS#	Volatile Compound	Soil CL	Soil ME
100-41-4	Ethylbenzene	75-125	65-135
87-68-3	Hexachlorobutadiene	55-140	40-155
89-82-8	Isoproplybenzene	75-130	70-140
108-38-3	m, p-Xylene	80-125	70-135
75-09-2	Methylene Chloride	55/140	40-155
1634-04-4	Methyl-tert-butyl ether	40-125	25-140
91-20-3	Naphthalene	40-125	25-140
104-51-8	n-Butylbenzene	65-140	50-140
103-65-1	n-Propylbenzene	65-135	50-145
95-47-6	o-Xylene	75-125	70-135
99-87-6	p-Isopropyltoluene	75-135	65-140
135-98-8	sec-Butylbenzene	65-130	50-150
100-42-5	Styrene	75-125	65-135
98-06-6	Tert-Butylbenzene	65-130	55-145
127-18-4	Tetrachloroethene	65-140	55-140
108-88-3	Toluene	70-125	60-135
156-60-5	Trans-1, 2-Dichloroethene	65-135	55-145
10061-02-6	Trans-1,3-Dichloropropene	65-125	55-140
79-01-6	Trichloroethene	75-125	70-130
75-65-4	Trichlorofluoromethane	25-185	10-215
75-01-4	Vinyl Chloride	60-125	45-140

Attachment 7

5 vials - received 3-26-09 Red Source TCL4 1&2

125 Market Street
New Haven, CT 06513
USA

AccuStandard, Inc.

Tel (203)786-5290
Fax (203)786-5287
Website AccuStandard.com

CERTIFICATE OF ANALYSIS

CATALOG NO: M-502A-R-10X **EXPIRATION:** Oct 21, 2011
DESCRIPTION: Volatile Organic Compounds - Liquids
LOT: B8100189 **See reverse for additional certification information.**
SOLVENT: MeOH

This product is guaranteed accurate to ±0.5% of the Certified Analyte concentration through the Expiration Date on the Label.

Component	CAS #	Purity % (GC/FID)	Prepared Concentration[1] (µg/mL)	Certified Analyte Concentration[2] (µg/mL)
Benzene	71-43-2	99.5	2000	1990
Bromobenzene	108-86-1	99.5	2001	1991
Bromochloromethane	74-97-5	99.1	2003	1985
Bromodichloromethane	75-27-4	98.7	2001	1975
Bromoform	75-25-2	99.2	2001	1985
n-Butylbenzene	104-51-8	99	2001	1981
sec-Butylbenzene	135-98-8	100	2001	2001
tert-Butylbenzene	98-06-6	99.6	2000	1992
Carbon tetrachloride	56-23-5	100	2001	2001
Chlorobenzene	108-90-7	100	2000	2000
Chloroform	67-66-3	99.8	2001	1997
2-Chlorotoluene	95-49-8	98.9	2001	1979
4-Chlorotoluene	106-43-4	98.5	2000	1970
Dibromochloromethane	124-48-1	99.1	2001	1983
1,2-Dibromo-3-chloropropane	96-12-8	100	2000	2000
1,2-Dibromoethane	106-93-4	99.9	2007	2005
Dibromomethane	74-95-3	98.6	2001	1973
1,2-Dichlorobenzene	95-50-1	98.2	2000	1964
1,3-Dichlorobenzene	541-73-1	99.8	2000	1996
1,4-Dichlorobenzene	106-46-7	99.9	2000	1998
1,1-Dichloroethane	75-34-3	99.6	2001	1993
1,2-Dichloroethane	107-06-2	100	2000	2000
1,1-Dichloroethene	75-35-4	99.0	2000	1980
cis-1,2-Dichloroethene	156-59-2	99.9	2000	1998
trans-1,2-Dichloroethene	156-60-5	96.0	2085 *	2002
1,2-Dichloropropane	78-87-5	100	2001	2001
1,3-Dichloropropane	142-28-9	99.9	2000	1998
2,2-Dichloropropane	594-20-7	100	2000	2000
1,1-Dichloropropene	563-58-6	99.1	2000	1982
cis-1,3-Dichloropropene	10061-01-5	97.7	2150 *	2101
trans-1,3-Dichloropropene	10061-02-6	97.7	1945 *	1900
Ethylbenzene	100-41-4	99.2	2000	1984
Hexachlorobutadiene	87-68-3	98.0	2001	1961
Isopropylbenzene	98-82-8	100	2000	2000
p-Isopropyltoluene	99-87-6	99.4	2001	1989
Dichloromethane	75-09-2	99.9	2003	2001

1. All weights are traceable through NIST, Test No. 822/272103-05
2. Certified Analyte Concentration = Purity x Prepared Concentration. The Uncertainty calculated for this product is ±4% which is the Combined Uncertainty uc(y). It represents an estimated standard deviation equal to the positive square root of the total variance of the uncertainty of components. The Expanded Uncertainty is U which is Uc(y) *K where K is the coverage factor at the 95% confidence level (K=2).
3. A product with a suffix (-1A, -2B, etc.) on its lot# has had its expiration date extended and is identical to the same lot# without the suffix.

* Weight compensated to 100% purity

Page 1 of 2 Certified by: R. Cooper

AccuStandard is accredited to ISO/IEC 17025:2005 and certified to ISO 9001:2000

OR-ORG/INO-001
Rev. 9/08

AccuStandard

Attachment 7 (Continued)

125 Market Street
New Haven, CT 06513
USA

AccuStandard, Inc.

Tel (203)786-5290
Fax (203)786-5287
Website AccuStandard.com

CERTIFICATE OF ANALYSIS

CATALOG NO: M-502A-R-10X **EXPIRATION:** Oct 21, 2011
DESCRIPTION: Volatile Organic Compounds - Liquids
LOT: B8100189 **See reverse for additional certification information.**
SOLVENT: MeOH

This product is guaranteed accurate to ±0.5% of the Certified Analyte concentration through the Expiration Date on the Label.

Component	CAS #	Purity % (GC/FID)	Prepared Concentration[1] (µg/mL)	Certified Analyte Concentration[2] (µg/mL)
Naphthalene	91-20-3	99.8	2000	1996
n-Propylbenzene	103-65-1	100	2000	2000
Styrene	100-42-5	99.7	2001	1995
1,1,1,2-Tetrachloroethane	630-20-6	98.6	2000	1972
1,1,2,2-Tetrachloroethane	79-34-5	98.6	2001	1973
Tetrachloroethene	127-18-4	100	2002	2002
Toluene	108-88-3	99.9	2001	1999
1,2,3-Trichlorobenzene	87-61-6	100	2001	2001
1,2,4-Trichlorobenzene	120-82-1	99.3	2001	1987
1,1,1-Trichloroethane	71-55-6	100	2000	2000
1,1,2-Trichloroethane	79-00-5	98.3	2000	1966
Trichloroethene	79-01-6	100	2001	2001
1,2,3-Trichloropropane	96-18-4	98.5	2001	1971
1,2,4-Trimethylbenzene	95-63-6	98.2	2000	1964
1,3,5-Trimethylbenzene	108-67-8	98.8	2000	1976
o-Xylene	95-47-6	99.0	2000	1980
m-Xylene	108-38-3	99.9	2001	1999
p-Xylene	106-42-3	99.9	2000	1998

54 Components

AccuStandard

1. All weights are traceable through NIST, Test No. 822/272103-05
2. Certified Analyte Concentration = Purity x Prepared Concentration. The Uncertainty calculated for this product is ±4% which is the Combined Uncertainty uc(y). It represents an estimated standard deviation equal to the positive square root of the total variance of the uncertainty of components. The Expanded Uncertainty is U which is Uc(y) *K where K is the coverage factor at the 95% confidence level (K=2).
3. A product with a suffix (-1A, -2B, etc.) on its lot# has had its expiration date extended and is identical to the same lot# without the suffix.

* Weight compensated to 100% purity

Page 2 of 2 Certified by: R. Cooper

AccuStandard is accredited to ISO/IEC 17025:2005 and certified to ISO 9001:2000

OR-ORG/INO-001
Rev. 9/08

Attachment 7 (Continued)

~~15~~ 10 vials received 6-20-08 2nd Source Gases

125 Market Street
New Haven, CT 06513 USA

AccuStandard, Inc.

Tel (203)786-5290 Fax (203)786-5287
Web AccuStandard.com

CERTIFICATE OF ANALYSIS

CATALOG NO: M-502B-10X
DESCRIPTION: Volatile Organic Cmpds - Gases
LOT: B8020151
SOLVENT: MeOH

EXPIRATION: Feb 21, 2011

See reverse for additional certification information.

This product is guaranteed accurate to ± 0.5% of the Certified Analyte concentration through the Expiration Date on the Label

Component	CAS #	Purity % (GC/FID)	Prepared Concentration[1] (µg/mL)	Certified Analyte Concentration[2] (µg/mL)
Bromomethane	74-83-9	99.0	2000	1980
Chloroethane	75-00-3	99.7	2000	1994
Chloromethane	74-87-3	99.5	2010	2000
Dichlorodifluoromethane	75-71-8	98	2008	1968
Trichlorofluoromethane	75-69-4	99.0	2001	1981
Vinyl chloride	75-01-4	99.5	2010	2000

6 Components

1. All weights are traceable through NIST, Test No. 822/272103-05
2. Certified Analyte Concentration = Purity x Prepared Concentration. The Uncertainty calculated for this product is ±4% which is the Combined Uncertainty uc(y). It represents an estimated standard deviation equal to the positive square root of the total variance of the uncertainty of components. The Expanded Uncertainty is U which is Uc(y) *K where K is the coverage factor at the 95% confidence level (K=2).
3. A product with a suffix (-1A, -2B, etc.) on its lot# has had its expiration date extended and identical to the same lot# without the suffix.

Certified by R. Cooper

AccuStandard is accredited to ISO/IEC 17025:2005

OR-ORG/INO-001
Rev. 7/07

accuStandard

Attachment 7 (Continued)

Received 2 ampules 2-6-09

Certificate of Analysis

NSI Solutions, Inc. * 7517 Precision Drive, Suite 101 * Raleigh, NC 27617 * 1-800-234-7837

Compound Name: Acrolein
Part Number: Q-6087-O
Lot Number: 020509-01

Expiration Date: 05/09
Solvent: P&T MeOH
(FLAMMABLE, IRRITANT)

COMPOUND NUMBER	ANALYTE	CHROMATOGRAPHIC Purity	GRAVIMETRIC CONCENTRATION (ug/mL)
W-02-06	Acrolein	99.2%	15017

PREPARATION: Reported concentration value has been corrected for purity. Concentration is calculated from wt/vol or vol/vol measurements using microbalances calibrated with NIST traceable weights to 0.0001 g and or ASTM Class A volumetric glassware or calibrated equivalent labware.

STORAGE & HANDLING: Store at ≤ 5° C. Allow to equilibrate to room temperature before use.

Kristi Bright

Kristi Bright, Organic Chemist

Attachment 7 (Continued)

Received 2 vials 5-10-09

RESTEK

Certificate of Composition

110 Benner Circle
Bellefonte, PA 16823-8812
Tel: (800)356-1688
Fax: (814)353-1309

FOR LABORATORY USE ONLY-READ MSDS PRIOR TO USE.

Catalog No. : 560347 **Lot No.:** A065489
Description : Custom Vinyl Acetate Standard
Expiration Date[1]**:** January 2011 **Storage:** Freezer

Elution Order	Compound	CAS #	Percent Purity [2]	Concentration [3] (weight/volume)	Percent Uncertainty [4]
1	Vinyl acetate	108-05-4	98%	1,501.360 ug/ml	+/-0.12 %
Solvent:	P&T Methanol	67-56-1	99%		

Column: 105m x .53mm x 3.0um Rtx-502.2 (cat.#10910)
Carrier Gas: hydrogen @ 40 cm/sec.
Temp. Program: 40°C (hold 2 min.) to 240°C @ 8°C/min.
Inj. Temp: 200°C
Det. Temp: 250°C
Det. Type: FID

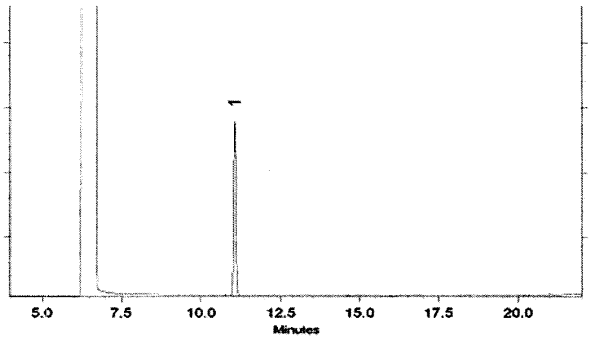

Diane Shaffer
Diane Shaffer - QA Analyst **Date Passed:** 01/27/2009 **Balance:** 1128353505 REVIEWED

Manufactured under Restek's ISO 9001-2000 Registered Quality System Certificate #FMB0397

1 Expiration date of the unopened ampule stored at recommended temperature.
2 Purity was determined by one or more of the following techniques: GC/FID, HPLC, GC/ECD, GC/MS. Value rounded to the nearest LOWER whole percentage. In addition to detectors listed above, chemical identity and purity are confirmed using one or more of the following: MS, DSC, solid probe MS, GC/FPD, GC/NPD, GC/TC, FTIR, melting point, refractive index, and Karl Fisher. See data pack or contact Restek for further details.
3 Based upon gravimetric preparation with balance calibration verified using NIST traceable weights (seven mass levels).
4 Percent uncertainty based upon balance AND ASTM Class A volumetric glassware accuracy.

Tech Tip:

Vinyl acetate is a volatile organic ester included in the target lists of several US EPA and other methods. Under acidic conditions, esters react with alcohols to form r esters (transesterification). Methanol-based mixes containing halogenated compounds are slightly acidic, so it is important to minimize exposure of vinyl acetate to n of halogenated compounds in methanol. For this reason, we offer vinyl acetate in individual solution, and suggest that it be introduced into the working level calibrati solution immediately before use. This will minimize problems and ensure more consistent results.

ORIGINAL MASTER COPY CONTROLLED COPY
If words above are not highlighted, this is an uncontrolled copy of this document.

Attachment 7 (Continued)

Received (2 vials) 3-10-09

RESTEK

Certificate of Composition

110 Benner Circle
Bellefonte, PA 16823-8812
Tel: (800)356-1688
Fax: (814)353-1309

FOR LABORATORY USE ONLY-READ MSDS PRIOR TO USE.

Catalog No. : 560345 **Lot No.:** A065532
Description : Custom Ketones Plus Standard
Expiration Date[1]: July 2010 **Storage:** Freezer

Elution Order	Compound	CAS #	Percent Purity [2]	Concentration [3] (weight/volume)	Percent Uncertainty [4]
1	Acetone	67-64-1	99%	3,750.000 ug/ml	+/-0.10 %
2	Acrylonitrile	107-13-1	99%	15,000.000 ug/ml	+/-0.10 %
3	2-Butanone (MEK)	78-93-3	99%	3,750.000 ug/ml	+/-0.10 %
4	2-Chloroethyl vinyl ether	110-75-8	98%	1,499.400 ug/ml	+/-0.10 %
5	4-Methyl-2-pentanone (MIBK)	108-10-1	99%	3,750.000 ug/ml	+/-0.10 %
6	2-Hexanone	591-78-6	99%	3,750.000 ug/ml	+/-0.10 %
Solvent:	P&T Methanol/Water (90:10)	67-56-1/7732-18-5	99%		

Column:
60m x .25mm x 1.4um
Rtx-502.2 (cat.#10916)

Carrier Gas:
helium @ 2.2 ml/min.

Temp. Program:
40°C (hold 2 min.) to 240°C
@ 8°C/min. (hold 10 min.)

Inj. Temp:
200°C

Det. Temp:
250°C

Det. Type:
MSD

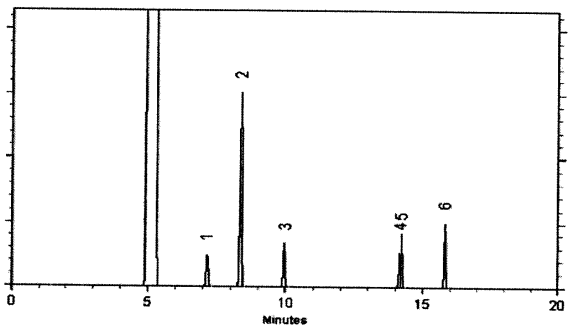

Sara Eyster
Sara Eyster QA Analyst **Date Passed:** 01/29/2009 **Balance:** 1121472889

Manufactured under Restek's ISO 9001-2000 Registered Quality System Certificate #FMB0397

1 Expiration date of the unopened ampule stored at recommended temperature.
2 Purity was determined by one or more of the following techniques: GC/FID, HPLC, GC/ECD, GC/MS. Value rounded to the nearest LOWER whole percentage. In addition to detectors listed above, chemical identity and purity are confirmed using one or more of the following: MS, DSC, solid probe MS, GC/FPD, GC/NPD, GC/TC, FTIR, melting point, refractive index, and Karl Fisher. See data pack or contact Restek for further details.
3 Based upon gravimetric preparation with balance calibration verified using NIST traceable weights (seven mass levels).
4 Percent uncertainty based upon balance AND ASTM Class A volumetric glassware accuracy.

Tech Tip:

Degradation of tetrachloroethylene to pentachloroethane may occur if solutions containing 2-chloroethyl vinyl ether are combined with solutions that contain tetrachloroethylene.

ORIGINAL MASTER COPY CONTROLLED COPY
If words above are not highlighted, this is an uncontrolled copy of this document.

Attachment 7 (Continued)

10 vials received 6-20-08 2nd Source TCL4 1#2. Additions

125 Market Street
New Haven, CT 06513 USA

AccuStandard, Inc.

Tel (203)786-5290 Fax (203)786-5287
Web AccuStandard.com

CERTIFICATE OF ANALYSIS

CATALOG NO: S-13035
DESCRIPTION: Custom Standard Mix
LOT: B8060071
SOLVENT: Methanol

EXPIRATION: Jun 9, 2010

See reverse for additional certification information.

This product is guaranteed accurate to ± 0.5% of the Certified Analyte concentration through the Expiration Date on the Label

Component	CAS #	Purity % (GC/FID)	Prepared Concentration[1] (µg/mL)	Certified Analyte Concentration[2] (µg/mL)
1,1,1-Trichlorotrifluoroethane	354-58-5	99	2005	1985
1,1,2-Trichloro-1,2,2-trifluoroethane	76-13-1	99.2	2001	1985
Carbon disulfide	75-15-0	99.9	2002	2000
MtBE	1634-04-4	99.9	2000	1998
Isopropyl ether	108-20-3	99.6	2005	1997
Cyclohexane	110-82-7	99.9	2001	1999
Methylcyclohexane	108-87-2	100	2001	2001
Methyl acetate	79-20-9	99.7	2014	2008

8 Components

1. All weights are traceable through NIST, Test No. 822/272103-05
2. Certified Analyte Concentration = Purity x Prepared Concentration. The Uncertainty calculated for this product is ±4% which is the Combined Uncertainty uc(y). It represents an estimated standard deviation equal to the positive square root of the total variance of the uncertainty of components. The Expanded Uncertainty is U which is Uc(y) *K where K is the coverage factor at the 95% confidence level (K=2).
3. A product with a suffix (1A, 2B, etc.) on its lot# has had its expiration date extended and identical to the same lot# without the suffix.

Certified by: R. Cooper

AccuStandard is accredited to ISO/IEC 17025:2005

OR-ORG/NO-001
Rev. 7/07

AccuStandard

Attachment 7 (Continued)

2nd Source
A 10

Received 6-20-08

RESTEK

Certificate of Composition

110 Benner Circle
Bellefonte, PA 16823-8812
Tel: (800)356-1688
Fax: (814)353-1309

FOR LABORATORY USE ONLY-READ MSDS PRIOR TO USE.

Catalog No. : 563125 **Lot No.:** A060833
Description : Custom VOA Standard #1
Expiration Date[1]: June 2009 **Storage:** Freezer

Elution Order	Compound	CAS #	Percent Purity [2]	Concentration [3] (weight/volume)	Percent Uncertainty [4]
1	Acetonitrile	75-05-8	99%	500.000 ug/ml	+/-0.05 %
2	Allyl chloride (3-chloropropene)	107-05-1	98%	499.800 ug/ml	+/-0.05 %
3	Iodomethane (methyl iodide)	74-88-4	99%	500.000 ug/ml	+/-0.05 %
4	Chloroprene (2-chloro-1,3-butadiene)	126-99-8	99%	485.770 ug/ml	+/-5.04 %
5	Methacrylonitrile	126-98-7	99%	5,000.000 ug/ml	+/-0.05 %
6	Propionitrile	107-12-0	99%	25,000.000 ug/ml	+/-0.05 %
7	Isobutanol (2-Methyl-1-propanol)	78-83-1	99%	25,000.000 ug/ml	+/-0.05 %
8	Methyl methacrylate	80-62-6	99%	5,000.000 ug/ml	+/-0.05 %
9	1,4-Dioxane	123-91-1	----%	25,000.000 ug/ml	+/-0.05 %
10	Ethyl methacrylate	97-63-2	99%	5,000.000 ug/ml	+/-0.05 %
11	1-Chlorohexane	544-10-5	99%	500.000 ug/ml	+/-0.05 %
12	trans-1,4-dichloro-2-butene	110-57-6	98%	2,000.180 ug/ml	+/-0.05 %
13	Pentachloroethane	76-01-7	98%	499.800 ug/ml	+/-0.05 %
Solvent:	P&T Methanol	67-56-1	99%		

Column: 60m x .25mm x 1.4um
Rtx-502.2 (cat.#10916)
Carrier Gas: helium @ 2 ml/min.
Temp. Program: 40°C (hold 2 min.) to 240°C @ 8°C/min. (hold 10 min.)
Inj. Temp: 200°C
Det. Temp: 250°C
Det. Type: MSD

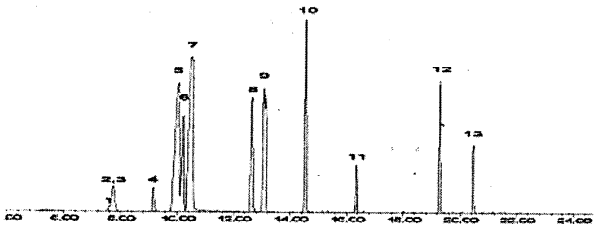

Sara Eyster
Sara Eyster / QA Analyst

Balance 1121472889

1 Expiration date of the unopened ampul stored at recommended temperature.
2 Purity was determined by one or more of the following techniques: GC/FID, HPLC, GC/ECD, GC/MS. Value rounded to the nearest LOWER whole percentage. In addition to detectors listed above, chemical identity and purity are confirmed using 1 or more of the following: MS, DSC, solid probe MS, GC/FPD, GC/NPD, GC/TC, FTIR, melting point, refractive index, and Karl Fisher. See data pack or contact Restek for further details.
3 Based upon gravimetric preparation with balance calibration verified using NIST traceable weights (seven mass levels).
4 Percent Uncertainty based upon balance AND ASTM Class A volumetric glassware accuracy.

ISO 9001 REGISTERED
Manufactured under Restek's ISO 9001 Registered Quality System Certificate #FM80397

Attachment 8

Condition Codes Used for Documentation in Logbooks

Condition Code	Definition
CS	Contamination Suspected
CT	Contamination Verified
DA	Dilution Acceptable
DI	Requires Dilution
DW	Dilution Wrong
ES	Extraction Same
EF2JS	Ending Standard Failed Second Tune Injection Same
JS	Injection Same
IH	Internals High
IL	Internals Low
IM	Internals Missing
LA	Lab Accident (Must Explain)
OT	Other (Must Explain)
OQ	Original Run Qualified
OW	Original Wrong for QC Sample
RP	Reportable Prior Run
RT	Retention Time Shift
RU	Run Unnecessarily
SF	Spike Recoveries Failed
SH	Surrogate Recoveries Failed High
SI	Spiked Inadvertently
SL	Surrogate Recoveries Failed Low
SM	Surrogate or Spike Missing
IF	Instrument Failure (Must Explain)
US	Unacceptable Standard (Must Explain)
VR	Verify Results (Must Explain)
NM	Did Not Match Prior Run or Duplicate
RN	Reanalyze Neat
PC	Poor Chromatography
WS	Wrong Standard

ORIGINAL MASTER COPY CONTROLLED COPY
If words above are not highlighted, this is an uncontrolled copy of this document.

CompuChem
A Division Of
Liberty Analytical Corp.

501 Madison Avenue
Cary, NC 27513

NELAP accredited

SOP DOCUMENTATION FORM

This form must accompany all new and revised Standard Operating Procedures (SOPs) when you turn them in to Quality Assurance for review. Please fill out the entire block below (except effective date).

This is a new procedure _____ revised procedure ✓ outdated procedure (archive) _____

- Procedure Code: 177 SOP Section #: 2.2.3.7 Revision #: 11

SOP Title:
Analysis of Diesel Range Organics (DRO), Oil Range Organics (ORO), JP4, JP8, and Total Jet Fuel in Aqueous and Solid Samples by SW846 and Extractable Petroleum Hydrocarbons by TN DEC

Effective date: (QA fills in) 04-03-2009

- Procedure prepared by: _____ Date: ~~3/9/09~~ ~~2/27/09~~ 1/27/09 JM 6/12/09 JM 6/3/09
- Procedure approved by: (If the manager prepared the SOP, a qualified second party should sign) Kathryn E. Humphries Date: 3/17/09
- Reason for change: Added Method 8015C and removed Ohio VAP
- This procedure meets the requirements of the following approved method references:

SW-846, 3rd Edition, update III, Method 8015B
SW-846, 3rd Edition, Update IV, Method 8015C
"Method for Determination of Extractable Petroleum Hydrocarbon by GC/FID", TNDEC, March 1999

Procedure approved by a QA Representative (unless QA Representative signed above):

_____ Date: _____

On an annual basis: Lab managers are required to review lab practices and revise the SOP if necessary. If no revision is necessary, indicate by your signature that the SOP has been reviewed.

Annual Review—Signature: _____ Date: _____

Annual Review—Signature: _____ Date: _____

Annual Review—Signature: _____ Date: _____

Annual Review—Signature: _____ Date: _____

Instrument Procedure 177: Analysis of Diesel Range Organics (DRO), **Oil Range Organics (ORO)**, JP4, JP8, and Total Jet Fuel in Aqueous and Solid Samples by SW846 and Extractable Petroleum Hydrocarbons by TN **DEC**

Table of Contents

SECTION	PAGE NO.
Section 1.0 – Scope and Application	2
Section 2.0 – Summary of Method	2-3
Section 3.0 – Definitions	3-4
Section 4.0 – Interferences	4-5
Section 5.0 – Safety	5
Section 6.0 – Equipment and Supplies	5
Section 7.0 – Reagents and Standards	9-9
Section 8.0 - Sample Preservation and Storage	9
Section 9.0 – Quality Control	10-14
Section 10.0 – Calibration and Standardization	14-15
Section 11.0 – Procedure	15-16
Section 12.0 – Data Analysis and Calculations	17-21
Section 13.0 – Method Performance	21
Section 14.0 – Pollution Prevention	22
Section 15.0 – Waste Management	22
Section 16.0 – References	22-23
Section 17.0 – Attachments as Tables, Diagrams and Flowcharts	23
Attachment 1	24
Attachment 2	25
Attachment 3	26

ORIGINAL MASTER COPY CONTROLLED COPY
If words above are not highlighted, this is an uncontrolled copy of this document.

Instrument Procedure 177: Analysis of Diesel Range Organics (DRO) **Oil Range Organics (ORO)**, JP4, JP8, and Total Jet Fuel in Aqueous and Solid Samples by SW846 and Extractable Petroleum Hydrocarbons by TN **DEC**

1.0 Scope and Application

This method is used for the determination of total petroleum hydrocarbons (TPH) including diesel range organics corresponding to the range of alkanes from C_{10} to C_{28} (C_{12} to C_{40} for TN DRO) and covering a boiling point range of 170°C to 430°C. **ORO, JP4, JP8, and Total Jet Fuel are determined by the retention time window of the chromatographic "fingerprint" pattern of the fuel standard to be determined.** Constituents are extracted from aqueous and solid samples into a solvent amenable to analysis by a gas chromatography (GC) utilizing a flame ionization detector (FID).

The reporting limit **is at or above** the low**est** calibration standard concentration. The reporting limits are as follows:

- **DRO EPA** 8015B **and EPA 8015C – 0.5** mg/L and 10 mg/Kg
- **TN DRO (by TN DEC)– 0.2 mg/L and 8.0 mg/Kg**
- **ORO – 1.0 mg/L and 10 mg/Kg**
- JP4 and JP8 – 0.2 mg/L and 10 mg/Kg

Staff members performing the procedures described in this SOP are responsible for reading, understanding, and complying with the SOP requirements. Supervisors are responsible for directing the analyst to the controlled SOP, and providing adequate explanation of the material contained therein.

This procedure is restricted to use by or under the supervision of analysts experienced in the instrumentation or preparative methods and who have demonstrated the ability to generate acceptable results through QC samples and analyst capability studies. Refer to the Quality Manual for procedures for performing and documenting demonstration of capability.

2.0 Summary of Method

2.1 Diesel fuel samples are prepared by the solvent extraction methods and then introduced into the GC and analyzed. An appropriate column and temperature program is used in the gas chromatograph to separate the organic compounds. Detection is achieved by a flame ionization detector (FID). Fused silica capillary columns are necessary for the analysis of petroleum hydrocarbons. Quantitation is by means of the external standard technique. Quality is measured through surrogate recovery, LCS and matrix spike precision and accuracy.

2.2 This procedure encompasses both EPA 8015B and EPA 8015C. All samples for SC DHEC must be analyzed by EPA 8015C. This SOP is NOT for use with Ohio VAP projects. Please see Ohio VAP specific SOP.

3.0 Definitions

3.1 Method detection limit (MDL) – The minimum concentration of an analyte that can be measured and reported with 99% confidence that the analyte concentration is greater than zero and is determined from analysis of a sample in a given matrix containing the analyte (40 CFR, Part 136, Appendix B.) **The test concentration used to determine the MDL must be greater than the calculated MDL and less than ten times the calculated MDL. The test concentration and the calculated MDL must be less than the Reporting Limit (RL) (section 3.2).**

To meet the requirements of the DOD-QSM (section 3.8), the reporting limit must also be a minimum of three times the MDL and the ratio of the mean recovered concentration and the calculated MDL must be between one and five for reagent water matrix and between one and ten for all other matrices. If the reporting limit is not at least three times higher than the MDL value the MDL study is either repeated until an acceptable ratio is achieved or the reporting limit is adjusted upward in order to achieve this minimal ratio. If the ratio of the mean recovered concentration and the calculated MDL is not acceptable for a given matrix the MDL study must be repeated, at an adjusted concentration, until an acceptable ratio is achieved.

3.2 Reporting Limit **(RL)** – The laboratory reporting limit is **at or above** the lowest initial calibration standard concentration. For organic methods, values detected below the reporting limit and above the MDL may be reported and qualified as an estimated concentration.

3.3 Diesel fuel – consists primarily of straight-chain hydrocarbons (alkenes and alkanes) ranging in length from C_{10} to C_{28} (C_{12} to C_{40} for TN DRO). Carbon chain length of C_{16} and C_{17} predominate in the mixture, whose composition approximates a bell-shaped curve with C_{16} and C_{17} as the mean **(see Attachment 3)**. Diesel fuel may also contain some aromatic constituents (depending on the source and refining process), including benzene. They usually account for less than 0.1% of the total product.

3.4 Reporting Units –mg/L for aqueous samples; mg/Kg for solid samples

3.5 An SDG is defined by the following, whichever is more frequent:

- each 20 field samples received within a case, or
- each 7 calendar day period during which field samples in a case are received (14 calendar days if requested by the client) beginning with the receipt of the first sample.

Note: The DOD-QSM and SC DHEC do not accept the SDG approach, unless the samples are prepared in a single batch. When a group of up to 20 field samples of a similar matrix are prepared as one batch, method-specified QC samples such as a method blank, laboratory control sample, matrix spike, matrix spike duplicate, and matrix duplicate must also be prepared together at a rate of 5%. If samples are batched together from different sites, project-specific QC must be processed.

3.6 Extraction Batch – a group of up to 20 field samples of a similar matrix, method-specified QC samples such as a method blank, laboratory control sample, matrix spike, matrix spike duplicate, and matrix duplicate prepared together at the same time.

3.7 SC DHEC – South Carolina Department of Health and Environmental Control

3.8 DOD-QSM – Department of Defense Quality Systems Manual

3.9 TN-DEC – Tennessee Department of Environment and Conservation

3.10 Ohio VAP – Ohio Environmental Protection Agency Voluntary Action Program

4.0 Interferences

4.1 Contamination by carryover can occur when high-concentration and low-concentration samples are analyzed in sequence. The sample syringe must be rinsed out with methylene chloride between samples.

4.2 Solvents, reagents, glassware, and other sample processing hardware must be demonstrated to be free from interferences under the conditions of the analysis by running method blanks and solvent blanks.

4.3 Due to the nature of the solid and water matrices produced by these samples, the most common problem encountered analytically **is** interference from other petroleum by-products encountered with the diesel fuel. Maintenance procedures **are** employed when poor column resolution results from dirty injector liners or

dirty injector ports. Instrument maintenance logbooks are maintained for each GC instrument.

5.0 Safety

5.1 The **extracted** samples **must** be handled with care due to the toxicity of methylene chloride and the possible high levels of TPH extractable contamination. Appropriate protective equipment and clothing must be used under the assumption that all samples are potentially hazardous. During sample preparation, glasses, gloves and lab coats are a minimum requirement. The persistent presence of noxious odors may be indicative of failure of the laboratory ventilation system and must be reported to a supervisor or manager.

5.2 Laboratory staff must review the Chemical Hygiene Plan for general safety policies, and Material Safety Data Sheets for reagents used in the laboratory.

6.0 Equipment and Supplies

6.1 GC System

6.1.1 Varian 3400 and Thermoquest Trace GC 2000 gas chromatographs suitable for on-column and splitless injection with all required accessories, including syringes, analytical columns, gases, **FID** detectors and data system.

6.2 Column

6.2.1 GC column – Restek Rtx-5m: 30 m, 0.53 mm I.D. (or equivalent).

6.3 Supplies

6.3.1 Pipets – Class A glass pipets, assorted sizes.

6.3.2 Pastueur pipets

6.3.3 Gas-tight syringes – assorted sizes.

6.3.4 Volumetric flasks – Class A glass in assorted sizes.

6.3.5 Vials or Bottles – assorted sizes with Teflon-lined caps

6.3.6 Drummond (or equivalent) adjustable pipet with disposable capillary tubes to deliver volumes of 20-100 μL

7.0 Reagents and Standards

All standards are prepared in the Organic Standards Laboratory. Standards are stored separately from samples at 2-4°C in the reach-in cold storage units in the instrument and organic standards laboratories when not in use.

7.1 Reagent water – All water used in this procedure must be reagent-grade Type I water with regard to resistivity of > 10 mega ohm-cm (19th and 20th Editions of Standard Methods, Method 1080) which is demonstrated to meet the blank contamination acceptance criteria contained in this Standard Operating Procedure (SOP).

7.2 Methylene Chloride – Reagent Grade

7.3 Acetone – Reagent Grade

7.4 Methanol – Reagent Grade

7.5 Stock Standards Standard Solutions

7.5.1 NSI o-terphenyl standard (Catalog# 1341H) – 10,000 µg/mL of o-terphenyl in methylene chloride (or equivalent).

7.5.2 Restek o-terphenyl standard (Catalog# 31097) - 10,000 µg/mL of o-terphenyl in methylene chloride (or equivalent).

7.5.3 Restek Diesel Fuel #2 Standard (Catalog# 31258) – 50,000 µg/mL diesel fuel #2 in methylene chloride (or equivalent).

7.5.4 NSI Diesel Fuel #2 Standard (Catalog# UST-145) - 50,000 µg/mL diesel fuel #2 in methylene chloride (or equivalent).

7.5.5 Restek Motor Oil Standard (Catalog# 31464) – 50,000 µg/mL motor oil in methylene chloride (or equivalent).

7.5.6 Restek JP-4 Military Fuel (Catalog# 31250) – 50,000 µg/mL JP-4 in methylene chloride (or equivalent).

7.5.7 Restek JP-8 Military Fuel (Catalog# 31254) – 50,000 µg/mL JP-8 in methylene chloride (or equivalent).

7.5.8 **NSI Florida TPH Mix** (Catalog **C-443) – 2000** µg/mL each compound (**C-8,** C-10, C-12, C-14, C-16, C-18, C-20, C-22, C-24, C-26, C-28, **C30, C32, C34, C36, C38, and C40**) in **methylene chloride** (or equivalent).

7.5.9 Stock Surrogate Solution

7.5.9.1 This solution can be purchased or prepared from neat material.

7.5.9.2 To prepare a 10,000 µg/mL o-terphenyl solution, add 250 mg of o-terphenyl to a 25 mL volumetric flask containing about 5

mL of methylene chloride. Dilute to volume with methylene chloride. Prepare this standard annually.

7.6 Intermediate Calibration Standard Solutions

7.6.1 DRO Calibration **Standard** (High)

7.6.1.1 Prepare a 5,000 µg/mL DRO standard solution by adding 5.0 mL of Restek Diesel Fuel #2 Mix and 2.50 mL of o-terphenyl surrogate stock to a 50 mL volumetric flask containing about 10 mL of methylene chloride. Dilute to volume with methylene chloride. Prepare this standard every 6 months.

7.6.2 **DRO/ORO (High) (includes TN DRO)**

7.6.2.1 Prepare a 5,000 µg/mL **DRO/ORO (**solution by adding 5.0 mL of Restek Motor Oil Standard, 5.0 mL of Restek Diesel Fuel #2 Mix, and 2.50 mL of o-terphenyl surrogate stock to a 50 mL volumetric flask containing about 10 mL of methylene chloride. Dilute to volume with methylene chloride. Prepare this standard every 6 months.

7.6.4 JP-4 Calibration Standard (High)

7.6.3.1 Prepare a 5,000 µg/mL JP-4 standard solution by adding 2.5 mL of Restek JP-4 and 1.25 mL of o-terphenyl surrogate stock to a 25 mL volumetric flask containing about 10 mL of methylene chloride. Dilute to volume with methylene chloride. Prepare this standard every 6 months.

7.6.4 JP-8 Calibration Standard (High)

7.6.4.1 Prepare a 5,000 µg/mL JP-8 standard solution by adding 2.5 mL of Restek JP-8 and 1.25 mL of o-terphenyl surrogate stock to a 25 mL volumetric flask containing about 10 mL of methylene chloride. Dilute to volume with methylene chloride. Prepare this standard every 6 months.

7.6.5 O-terphenyl Surrogate Solution (High)

7.6.5.1 Prepare the 500 µg/mL o-terphenyl surrogate solution (see above section 7.5.9) by adding 5.0 mL of surrogate stock solution to a 100 mL volumetric flask containing about 20 mL of methanol. Dilute to volume with methanol. Prepare every 6 months

7.6.6 Retention Time Marker Standard (RTMARK)

7.6.6.1 Prepare a 50 µg/mL Retention Time Marker standard solution by adding 1.25 mL of **NSI Florida TPH Mix (see section 7.5.8)** to a 50 mL volumetric flask containing about 10 mL of methylene chloride. Dilute to volume with methylene chloride. Prepare this standard every 6 months.

7.6.7 Instrument Blank (IBLK)

7.6.7.1 Prepare a 100 µg/mL o-terphenyl solution by adding 10 mL of surrogate solution (**see above section 7.6.5.1**) to a 50 mL volumetric flask containing about 10 mL of methylene chloride. Dilute to volume with methylene chloride. Prepare this standard every 6 months.

7.7 Working Calibration Standard Solutions

7.7.1 Five-Point Calibration Standards

A five-point calibration curve is prepared by making 2, 5, 10, and 25 times dilutions of the high calibration standard in methylene chloride resulting in the standard concentrations outlined in the following table.

Standard	**High (neat) ug/mL**	**Med 3 250 (2x) ug/mL**	**Med 2 (5x) ug/mL**	**Med 1 (10x) ug/mL**	**Low (25x) ug/mL**
Diesel (DRO) **o-terphenyl (surrogate)**	5000 **500**	2500 **250**	1000 **100**	500 **50**	**200** **25**
Diesel (DRO)+Motor Oil (ORO) **o-terphenyl (surrogate)**	5000 **each** **500**	2500 **each** **250**	1000 **each** **100**	500 **each** **50**	**200 each** **25**
JP 4 **o-terphenyl (surrogate)**	5000 **500**	2500 **250**	1000 **100**	500 **50**	**200** **25**
JP 8 **o-terphenyl (surrogate)**	5000 **500**	2500 **250**	1000 **100**	500 **50**	**200** **25**

7.8. Initial Calibration Verification (ICV) Standard

7.8.1 The initial DRO calibration must be verified using a second source standard. This is prepared from a source other than that used to prepare the calibration standards and contains DRO at a concentration of 2500 µg/mL.

7.8.2 Prepare the check standard by adding 0.50 mL of NSI Diesel Fuel#2 Standard and 0.25 mL of surrogate stock solution to a 10 mL volumetric flask containing about 3 mL of methylene chloride. Dilute to volume with methylene chloride. Analyze undiluted. Prepare this standard every 6 months.

7.9 Continuing Calibration Verification Standard (CCV)

7.9.1 The continuing calibration standard (Med3) is the mid-point of the calibration curve and is prepared daily. See section **7.7.1**.

7.10 The concentrations of surrogate and spiking solutions added to the QC samples are given in the following table **(for specific preparation and addition instructions of these standards see SOP 2.2.3.1 and 2.2.3.8)**:

Parameter	Matrix	LCS	Matrix Spike	Surrogate
DRO 8015	Water	2.5 mg/L	2.5 mg/L	0.25 mg/L
TN DRO	Water	1 mg/L	1 mg/L	0.25 mg/L
JP4	Water	0.5 mg/L	0.5 mg/L	0.25 mg/L
JP8	Water	0.5 mg/L	0.5 mg/L	0.25 mg/L
Total Jet Fuel	Water	0.5 mg/L	16 mg/L	0.25 mg/L
DRO 8015	Soil	125 mg/Kg	125 mg/Kg	12.5 mg/Kg
TN DRO	Soil	20 mg/Kg	20 mg/Kg	10 mg/Kg
JP4	Soil	12.5 mg/Kg	12.5 mg/Kg	12.5 mg/Kg
JP8	Soil	12.5 mg/Kg	12.5 mg/Kg	12.5 mg/Kg
Total Jet Fuel	Soil	12.5 mg/Kg	12.5 mg/Kg	12.5 mg/Kg

8.0 Sample Preservation and Storage

8.1 Sample extracts are stored at 2-6°C until analysis.

8.2 Soil samples must be extracted within 14 days of collection, and extracts must be analyzed within 40 days of extraction.

8.3 Water samples must be extracted within 7 days of collection. Extracts must be analyzed within 40 days of extraction.

8.4 Details of the preservation and handling of samples are found in the tables in Sample Control SOP 4.1, "Receiving Samples" and 4.6, "Storing Samples."

9.0 Quality Control

9.1 Method Blank

9.1.1 The method blank consists of a matrix similar to that of its associated samples that is free from the analytes of interest. The method blank is processed with the same procedures under the same conditions as the associated samples. A method blank is prepared with each extraction batch of up to 20 field samples. For the matrix used and preparation instructions for the method blank, refer **to** the associated sample preparation procedures.

9.1.2 Any petroleum hydrocarbon present in the blank must be less than the reporting limit.

9.1.2.**1** To meet the requirements of the DOD-QSM, the blank must contain less than one-half the reporting limit of any petroleum hydrocarbon.

9.1.**3** If the criteria in section 9.1.2 are not me**t instrument maintenance may be necessary, see section 9.10. Reanalyze the blank, if contamination persists (9.1.2 criteria fail again)** the entire batch must be re-extracted and re-analyzed.

9.1.**4** Any analyte detected in the method blank at a concentration between the reporting limit and the MDL is reported as an estimated concentration.

9.1.**5** Any analyte detected in the method blank and the associated samples is flagged with a "B" flag on the report form and explained in the SDG narrative.

9.1.**6** For project specific QC sample requirements for Ohio Voluntary Action (VAP) projects, refer to the Laboratory Information Management System (LIMS).

9.2 Laboratory Control Sample (LCS)

9.2.1 The LCS is a matrix free from the analytes of interest spiked with verified known amounts of analytes. An LCS is prepared with each extraction batch of up to 20 samples. For the matrix used and preparation instructions for the LCS, refer to the associated sample preparation procedures.

9.2.2 If the LCS fails, the entire batch must be **re-extracted if sample volume permits. If additional sample volume is not sufficient to permit re-extraction or if** corrective action**, such as instrument maintenance or re-extraction with or without new standard preparation, fails** and data associated with an LCS which fails acceptance criteria are reported the data are qualified in the SDG narrative. Reference the "Q" flag for data reported to meet the requirements of the DOD-QSM.

9.2.**2.1** Precision and accuracy criteria for the LCS are given below.

Parameter	% Recovery - Water	% Recovery - Soil
DRO (8015)	50-139	50-150
ORO and TN DRO	50-139	50-150
JP4	40-120	40-120
JP8	40-120	40-120

9.2.2.2 If the LCS fails high and the associated samples are non-detects, do not re-extract. Report the data and narrate the failing LCS in the case narrative.

9.3 Matrix Spike / Matrix Spike Duplicate (MS/MSD)

9.3.1 An MS/MSD pair is prepared for every SDG (if requested by the client) when the client supplies sufficient sample volume.

9.3.2 Precision and accuracy criteria for the MS/MSD are given below. Matrix interference can be confirmed through evaluation of the LCS.

Parameter	RPD	% Recovery	RPD	% Recovery
	Water		Soil	
DRO (8015)	25	50-150	25	50-150
ORO and TN DRO	25	50-150	25	50-150
JP4	20	40-120	20	40-120
JP8	20	40-120	20	40-120

9.3.3 If the MS/MSD fails criteria and the LCS passes, the data **are to** be reported with the failure attributed to the sample matrix and discussed in the SDG narrative.

9.3.4 To meet the requirements of the DOD-QSM, the MS/MSD spike recoveries must be assessed using the LCS recovery limits in section 9.2.3 and the RPD criteria of ≤ 30 %.

9.3.4.1 When reporting MS/MSD data which do not meet acceptance criteria, any analyte reported in the original un-spiked sample must be qualified as an estimated concentration in the SDG narrative. Refer to the DOD-QSM "J" flag.

9.5 Surrogates

9.5.1 All client and QC samples are spiked with o-terphenyl as the surrogate.

9.5.2 Surrogate recovery criteria are 47 to 112% for water and 30 to 127% for soil samples.

9.5.3 If the surrogate fails in a field or QC sample**, including the preparation blank and LCS**, re-analyze the sample **neat (undiluted) unless dilution is necessary to bring target analytes into the calibration range or there is obvious matrix interference in field samples**. If the surrogate fail**ure occurs in the reanalysis of a sample**, re-**extract** the sample. If **the** surrogate failure occur**s in the reanalysis of** the preparation blank or LCS, the entire batch **must be** re-**extracted. New standard preparation may be necessary. If the surrogate fails in an MS and/or MSD and is consistent with the native sample or the other MS/MSD the failure is attributed to the sample matrix and discussed in the SDG narrative. If the surrogate fails in an MS or MSD and is not consistent with the native sample contact the project manager for guidance; re-extraction may be required if sufficient sample volume remains.**

9.5.**3.1** To meet the requirements of the DOD-QSM, if the surrogate recovery control limits in 9.5.2 are not met and sufficient volume remains, re-extract and reanalyze the sample. If obvious chromatographic interference with the surrogate is present, **contact the project manager for guidance;** re-**extraction** may not be necessary.

9.5.**3..2** If field sample results are reported with failing surrogate recoveries, qualify the results as estimated concentrations in the narrative. Refer to the DoD-QSM "J" flag.

9.5.**3.3** If QC samples results are reported with failing surrogate recoveries, qualify the results as estimated concentrations in the narrative. Refer to the DoD-QSM "Q" flag.

9.6 Samples following a high-level sample, containing total petroleum hydrocarbons at levels exceeding the calibration range, must be reanalyzed when an amount is detected above the reporting limit.

9.7 Retention Time Window Study

9.7.1 A retention time window study is conducted over a 72-hour period. Three analyses of the **Retention Time Marker Standard (RTMARK)** are performed and the mean and standard deviation of the retention time of the first eluting component, **of interest (e.g. C-10 in DRO and C12 on TN DRO** and the last eluting component, **of interest (e.g. C-28 in DRO and C40 in TN DRO)** are calculated. The study is performed once per year or after major instrumentation maintenance such as column change occurs **for each project specific carbon range, for example, C_{10} to C_{28} for DRO and C_{12} to C_{40} for TN DRO.**

9.7.2 The retention time window is established, prior to performing initial calibrations and daily calibration verifications. Subtract 3 standard deviations of the mean retention time (determined from the current 72-hour retention time window study) from the elution time of the first component **of interest (e.g.** C-10 **in DRO and C12 on TN DRO)** in the retention time marker standard and add 3 standards deviations of the mean retention time to the elution time of the last component **of interest (e.g.** C-28 **in DRO and C40 in TN DRO**) in the retention time marker standard. The data associated with the analysis of the retention time marker are provided in the report.

97.2.1 To meet the requirements of the DOD-QSM, the retention time window is established using the mid-point standard in the initial calibration curve or the CCV analyzed at the beginning of the analytical sequence.

9.7.3 The retention time window derived in section 9.7.2 is applied to the analysis of the continuing calibration verification standard and all subsequent field and QC sample analyses during the analytical sequence.

9.8 Solvent Blank: A solvent blank, consisting of only methyelene chloride, is run to assess instrument contamination. One or more solvent blanks must be run first in any sequence, prior to any standards or instrument blanks.

Refer to the section on calculations for details of the quantitation routine involving background subtraction of the solvent blank.

9.9 An instrument blank is run after the solvent blank and anytime carryover is suspected to be likely. Analytes detected in the instrument blank must be less than the reporting limit. If not, then another instrument blank must be analyzed, or any sample following an instrument blank that contains analyte above the reporting limit must be reanalyzed.

9.9.1 To meet the requirements of the DOD-QSM, the blank must contain less than one-half the reporting limit of any petroleum hydrocarbon.

9.10 Common maintenance procedures employed as corrective action include cleaning the injection port, replacing the liner, replacing the septum, replacing the syringe and replacing the column.

10.0 Calibration and Standardization

Standards and samples are introduced into the instrument using an autosampler. The calibration curve is established by dividing the total area of the diesel pattern, by the mass injected for five different concentrations of each standard. An injection volume of 1 µL is used for all calibration standards, samples, and quality control samples. In the event of column replacement, a new five point initial calibration must be analyzed. **SC DHEC must be run by 8015C**

10.1 **Initial Calibration:**

10.1.1 Average Response Factor: the maximum %RSD between the initial calibration standard levels is ≤ 20% (25% for TN DRO). Samples **must** not be analyzed until an acceptable **initial** calibration has been achieved. Samples must be diluted when a result exceeds the upper calibration standard. Results below the lowest standard are reported down to the MDL and are qualified as estimated concentrations.

10.1.2 Linear Regression: if the %RSD of the calibration factors is >20% (25% for TN DRO), a least squares regression of the calibration curve must be used. If the correlation coefficient of the calibration curve is ≥ 0.995, the initial calibration is acceptable and is used to calculate analyte concentration. The intercept of the calibration curve must not be forced through the origin, but must be calculated using the five data points.

10.1.3 If the initial calibration fails the entire initial calibration is re-analyzed, instrument maintenance and or a new set of standards may be needed.

10.1.4 Initial Calibration Verification (ICV): Once an acceptable initial calibration has been established, analyze a second source initial calibration verification (ICV) standard. The analyte recovery in the ICV must be ± 20% **of** that in the initial calibration. If the ICV fails acceptance criteria, correct the problem and re-analyze. If the second analysis of the ICV fails, analyze a new initial calibration.

10.2 Continuing Calibration Verification (CCV):

10.2.1 A continuing calibration verification (CCV) standard (Med3) must be analyzed at least every 12 hours or every 10 production samples, whichever is more frequent. No more than 15% difference for 8015B, (20% for 8015C, and 25% for TN DRO) must be observed between the response of the CCV standard and the response from the initial calibration. If the difference is greater than 15% for 8015B (20% for 8015C, 25% for TN DRO), the CCV must be repeated. If upon repeat analysis, the difference is still greater than 15% for 8015B (20% for 8015C, 25% for TN DRO), corrective action must be taken and a new initial calibration must be established.

10.2.2 Samples must be bracketed by passing calibration verification standards. If an ending calibration verification standard fails, all samples analyzed since the last acceptable CCV must be reanalyzed.

11.0 Procedure

11.1 Documentation must follow the requirements in Quality Control SOP 13.6, "Proper Documentation Procedures."

11.2 Refer to Quality Control SOP 13.18, "Manual Chromatographic Peak Integration Procedures" for guidance in performing manual integrations.

11.3 One or more solvent blanks must be run first in any sequence, prior to any standards or instrument blanks. Refer to the section on calculations for details of the quantitation routine involving background subtraction of the solvent blank.

11.4 Retention time windows are set to include the **carbon range of interest, for example, C_{10} to C_{28} for DRO**. The window is set annually, or whenever instrument conditions change, by a 72-hour retention time study using the **NSI Florida TPH Mix.** The retention time window is then updated daily using the **NSI Florida TPH Mix**.

11.5 **A Continuing Calibration Verification is performed, unless an initial calibration is necessary.** The calibration type is the external calibration method utilizing the **lump** sum of **the area of** all the peaks **within the carbon ranges specified in section 3.3 for DRO.** Refer to the section on calculations for details of the quantitation routine. **Typical analytical sequences are outlined in Attachment 1. The analyst sets up the autosampler accordingly. The autosampler is programmed to deliver a 1 µL injection volume.**

11.6 The gas chromatographic operating conditions are as follows:

Carrier Gas:	Helium
Flow Rate:	5-10 ml/min.
Initial Column Temperature:	60°C for 3 minutes
Ramp Rate:	12°C/min.
Intermediate Column Temperature:	250°C
Intermediate Time:	5 minutes
Final Column Temperature:	300°C
Ramp Rate:	12°/min.
Final Hold time:	4 minutes
Injector Temperature:	250°C
Detector Temperature:	300°C

11.7 The analyst must complete the information fields in the instrument runlog (Attachment 2).

12.0 Data Analysis and Calculations

Calculations must be consistent with the Quality Control SOP 13.4, "Numerical Data Reduction."

12.1 Calculation of the mean or average of a set of values:

$$\overline{X} = \frac{\sum_{i=1}^{n} X_i}{n}$$

where: n = total number of values
x_i = each individual value used to calculate the mean
x = the mean of n

12.2 Calculation of the standard deviation of a set of values:

$$\text{Standard deviation} = \sqrt{\frac{\sum_{i=1}^{n}\left(X_n - \overline{X}\right)^2}{n-1}}$$

12.3 Calculation of percent recovery:

12.3.1 LCS and surrogates:

$$\%R = \frac{Amount\ found}{Amount\ spiked}\ x\ 100$$

12.3.2 Matrix spikes:

$$\%\,R = \frac{Amount\ in\ spiked\ sample - Amount\ in\ unspiked\ (native)\ sample}{Amount\ spiked}\ x\ 100$$

12.4 Calculation of % RSD

$$\%RSD = \left(\frac{Standard\ deviation}{\overline{X}}\right) \times 100$$

12.5 Calculation of RPD

$$RPD = \frac{|Value\ 1\ -\ Value\ 2|}{(Value\ 1\ +\ Value\ 2)/2} x100$$

12.6 Linear Calibration using Least Squares Regression

General linear equation: $y = ax + b$

where:
y = Instrument response (peak area)
a = Slope of the line (coefficient of x)
x = Mass of the analyte in the calibration standard aliquot injected
b = y-intercept

Linear Regression by Least Squares:

$$y_1^{'} = ax_i + b$$

Where:
b = intercept
x_i = Mass of the analyte in the ith calibration standard aliquot injected
$y_1^{'}$ = calculated response for the ith calibration standard

The sum of the squares of the differences is minimized to obtain a and b:

$$\sum_{i=1}^{N}(y_i - y_1^{'})^2$$

12.7 Correlation Coefficient r:

$$r = \frac{N\left[\sum_{i=1}^{N}(x_i y_i)\right] - \left[\sum_{i=1}^{N}(x_i)\right]\left[\sum_{i=1}^{N}(y_i)\right]}{\sqrt{N\left[\sum_{i=1}^{N}(x_i^2)\right] - \left[\sum_{i=1}^{N}(x_i)\right]^2} - \sqrt{N\left[\sum_{i=1}^{N}(y_i^2)\right] - \left[\sum_{i=1}^{N}(y_i)\right]^2}}$$

Where:
r = Correlation Coefficient
N = number of data points (equals 5 in a 5 point curve)
y = response
i = index variable (first data point i = 1)

x = Mass of the analyte in the calibration standard aliquot injected

12.**8** Calculation of %Difference (%D)

$$\%Diff = \frac{Value - \overline{Reference\ \ value}}{\overline{Reference\ \ value}} \times 100$$

12.**9** Calibration factors for GC analysis are calculated by dividing the total peak area for each chosen component in the standard by the total mass injected (in nanograms).

$$Calibration\ Factor\ (CF) = \frac{Peak\ area}{Total\ mass\ injected}$$

12.**10** Concentration

12.**10**.1 Quantitation of positive results in samples is accomplished by obtaining a processed file that contains the sum of all the individual peaks and areas in the diesel fuel pattern and comparing that to the mean calibration factor of the initial calibration. Quantitation of Diesel Range Organics (DRO) or extractable total petroleum hydrocarbon as Diesel is performed using the external standard technique. The concentration of DRO/extractable TPH as Diesel in samples is determined from summing the total response within the retention time range established from the analysis of the daily Restek DRO Mix (EPA/WISC) and dividing it by the average calibration factor. Soils are reported on a dry weight basis. See concentration calculations in sections 12.**10**.4 and12.**10**.7.

The chromatographic conditions employed may result in column-bleed, producing a rise in the baseline. For this reason, the column-bleed needs to be subtracted from the area of the DRO chromatogram. To do this, a **solvent blank** (methylene chloride) is analyzed during each 12-hour analytical shift. The area is measured in the same manner as DRO in samples and is subtracted from the area measured for samples **and the instrument blank. If more than one solvent blank is analyzed the last one run prior the instrument blank is used for background subtraction.**

12.**10**.2 Samples with results above the upper calibration standard must be diluted to achieve a result within the upper half of the calibration range.

12.**10**.3 Report the presence of significant peaks outside the chromatographic window. Peaks are significant if they can be distinguished above the noise in a chromatogram. Any peak three times the standard deviation of the signal to noise ratio is statistically significant.

12.**10**.4 Concentration of aqueous samples for GC analysis **using mean calibration factor from the initial calibration:**

$$ug/L = \frac{(Ax)(Vt)(Df)}{(\overline{CF})(Vi)(Vo)}$$

where: Ax = area response for the analyte
Vt = volume of the concentrated extract (µl)
Df = dilution factor. If no dilution, Df = 1.0
$\overline{CF}$ = mean calibration factor from the initial calibration
Vo = volume of water sample extracted (ml)
Vi = volume of extract injected (µl)

12.**10**.5 Concentration of soil samples (dry weight basis) for GC analysis **mean calibration factor from the initial calibration:**

$$ug/kg = \frac{(Ax)(Vt)(Df)}{(\overline{CF})(Vi)(Ws)(D)}$$

where: Ws = weight of sample extracted, in grams
D (dry weight)= 100 - % moisture100
Ax, Vt, Df, $\overline{CF}$, Vi have the same definitions as for water.

12.10.6 Concentration of aqueous samples for GC analysis using linear regression:

$$ug/L = \frac{(a(Ax)+b)(Vt)(Df)}{(Vi)(Vo)}$$

where: Ax = area response for the analyte

Vt = volume of the concentrated extract (µl)
Df = dilution factor. If no dilution, Df = 1.0
a = slope
b = y-intercept
Vo = volume of water sample extracted (ml)
Vi = volume of extract injected (µl)

12.10.7 Concentration of soil samples for GC analysis using linear regression:

$$ug/kg = \frac{(a(Ax)+b)(Vt)(Df)}{(Vi)(Ws)(D)}$$

where: Ws = weight of sample extracted, in grams
D (dry weight)= 100 - % moisture100
Ax = area response for the analyte
Vt = volume of the concentrated extract (µl)
Df = dilution factor. If no dilution, Df = 1.0
a = slope
b = y-intercept
Vo = volume of water sample extracted (ml)
Vi = volume of extract injected (µl)

12.11 Calculating Dilutions

If a sample concentration exceeds the high level standard a dilution must be performed. Determine a level of dilution that will result in a value within the upper half of the calibration range. This is an acceptable dilution. A 10x dilution is performed using 1 mL sample plus 9 mL diluent for a total volume of 10 mL. **It is to be recorded on the run log as "10x" and details must be presented on the run log as to how the dilution was prepared. The dilution must be discussed in the SDG narrative.**

13.0 Method Performance

This method was validated through in-house laboratory studies of method detection limits and precision and accuracy for single analyst. The data are retained by the QA department.

14.0 Pollution Prevention

The solvents used in this procedure pose little threat to the environment when recycled and managed properly. Pollution prevention encompasses any technique that reduces or eliminates the quantity or toxicity of waste at the point of generation. Numerous opportunities for pollution prevention exist in laboratory operation. The EPA has established a preferred hierarchy of environmental management techniques that places pollution prevention as the management option of first choice. Whenever feasible, laboratory personnel use pollution prevention techniques to address their waste generation. When wastes cannot be feasibly reduced at the source, the Agency recommends recycling as the next best thing. See SOP 12.1, "Hazardous Waste Disposal", regarding laboratory procedures for recycling solvent waste streams.

15.0 Waste Management

It is the laboratory's responsibility to comply with all federal, state, and local regulations governing waste management, particularly the hazardous waste identification rules and land disposal restrictions, and to protect the air, water, and land by minimizing and controlling all releases from fume hoods and bench operations. Compliance with all sewage discharge permits and regulations is also required.

Samples preserved with HCl or H_2SO_4 to pH <2 are hazardous and must be handled as hazardous waste.

Refer to the Hazardous Waste Management and Safety SOPs located in the lab.

16.0 References

16.1 **Non-Halogenated Organics by GC/FID**, SW846 3rd Edition, Update III, 12/96, Method 8015B

16.2 "Method for Determination of Extractable Petroleum Hydrocarbons by GC/FID", TN DEC, March 1999

16.3 Code of Federal Register, 40 CFR, Part 136, "Guidelines for Establishing Test Procedures for Priority Pollutants"

16.4 NELAC Standards, **, effective July 2003, plus revisions**

16.5 QA/G6: Guidance for Preparing Standard Operating Procedures (SOPs) EPA/600/B-07/001, April, 2007

16.6 CompuChem Quality Manual, Revision **11, June 23**, 2008**, plus revisions**

16.7 Department of Defense Quality Systems Manual for Environmental Laboratories, Final Version 3, January 2006

16.8 Quality Control SOP 13.6, "Proper Documentation Procedures"

16.9 Quality Control SOP 13.4, "Numerical Data Reduction"

16.10 Standard Methods for the Examination of Water and Wastewater, 20th (1998) Edition upon promulgation, Method 1080

16.11 Determinative Chromatographic Separations, SW846 3rd Edition, Update IV, March, 2003, Method 8000C

16.12 Non-Halogenated Organics by Gas Chromatography, SW846 3rd Edition, Update IV, Method 8015C, February 2007

17.0 Attachments as Tables, Diagrams and Flowcharts

17.1 Attachment 1 – 8015 Analytical Sequences

17.2 Attachment 2 - Instrument Run Log

17.3 Attachment 3 - Diesel fuel pattern

Attachment 1

Typical Analytical Sequences

Initial calibration	$MeCl_2$ (solvent blank) $MeCl_2$ $MeCl_2$ **Instrument Blank** RTMARKXY (RT window standard) DRO1XY (calibration standard) DRO2XY DRO3XY DRO4XY DRO5XY CHKSTDXY**(calibration verification standard)**
Continuing Calibration	$MeCl_2$ $MeCl_2$ $MeCl_2$ **Instrument Blank** RTMARKXZ**(RT window standard)** DROMXZ**(calibration verification standard)** ($\leq$ 10 SAMPLES) $MeCl_2$ $MeCl_2$ RTMARKXA DROMXA**(calibration verification standard)**

Attachment 2

COMPUCHEM a Division of Liberty Analytical Corp
Diesel Range/Oil Range Run Log: LOGBOOK 4 E (5) 8

Instrument ID ___59___ File Path: _____ DATE ___/___/___
Amount Injected = 1 µL Method (circle one): 8015B 8015C TN DEC

☐Changed septum ☐Changed liner ☐Baked column ☐Trimmed column

	REJECTED	FILE NUMBER	REPORTED	DATE	COMPUCHEM #	CASE/SDG#	STANDARD ID	CHEMIST	COMMENTS
1				/ /					
2				/ /					
3				/ /					
4				/ /					
5				/ /					
6				/ /					
7				/ /					
8				/ /					
9				/ /					
10				/ /					
11				/ /					
12				/ /					
13				/ /					
14				/ /					
15				/ /					
16				/ /					
17				/ /					
18				/ /					
19				/ /					
20				/ /					

The presence of the Chemist's/Analyst's employee ID number, or signature, on this run log attests that strict compliance with the method's SOP has occurred. Any SOP deviations require documentation by the responsible chemist/analyst together with the chemist's/analyst's initials and the initials of the lab supervisor and a QA department representative, signifying approval of the deviation.

Calibration ID: _____ Sequence ID: _____ Hexane Lot No_____

REVIEWED BY: _____ DATE _____

03/09/09:JR

Attachment 3

Data File: /chem/varian44.i/q001.b/tp44q001.d
Date : 14-JUL-1999 21:58
Client ID: DIESEL5
Sample Info: DIESEL;DIESELH84
Volume Injected (uL): 4.0
Column phase: RTX-5

Page 2

Instrument: varian44.i
Operator: 1295
Column diameter: 0.53

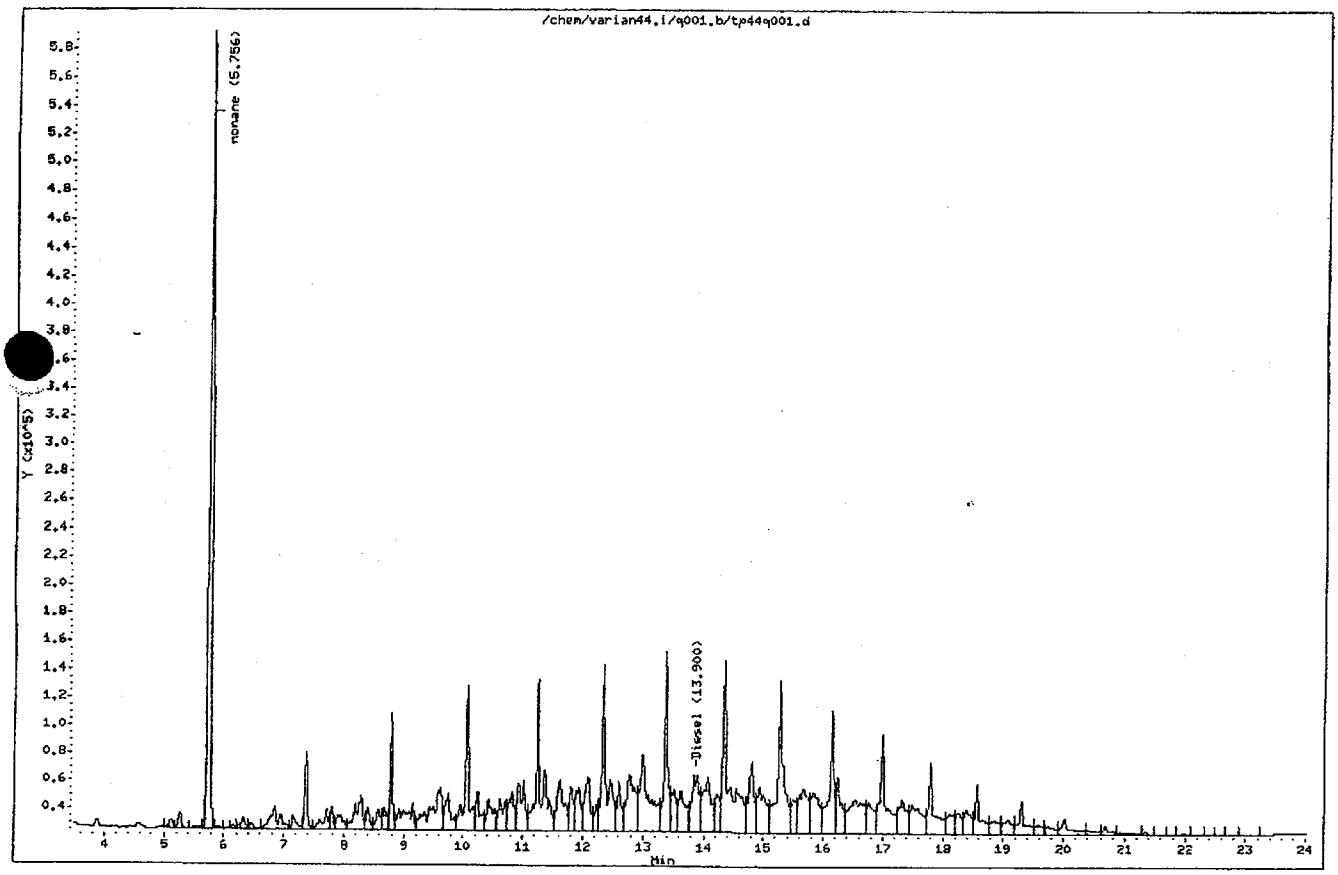

CompuChem
A Division Of
Liberty Analytical Corp.

501 Madison Avenue
Cary, NC 27513

NELAP accredited

SOP DOCUMENTATION FORM

This form must accompany all new and revised Standard Operating Procedures (SOPs) when you turn them in to Quality Assurance for review. Please fill out the entire block below (except effective date).

This is a new procedure _____ revised procedure ✓ outdated procedure (archive) _____

- Procedure Code: 246 SOP Section #: 2.2.3.8 Revision #: 3

SOP Title: Preparation of Soil/Sediment/Sludge Samples for Diesel Range Organics (DRO) and Oil Range Organics (ORO) by SW-846 Method 3550B, Method 3550C and DRO by TN DEC

Effective date: (QA fills in) 04-03-2009

- Procedure prepared by: [signature] Date: 02-05-2009 ~~03-17-2009~~ 6/8/09
- Procedure approved by: (If the manager prepared the SOP, a qualified second party should sign) [signature] Date: 9-1-09
- Reason for change: Added Method 3550C, removed Ohio VAP, and clarified use for ORO
- This procedure meets the requirements of the following approved method references:

SW-846, 3rd Edition, Update III, 12/96, Method 3550B
SW-846, 3rd Edition, Update IV, 2/07, Method 3550C
Method for Determination of Extractable Petroleum Hydrocarbons, TNDEC, 1999

Procedure approved by a QA Representative (unless QA Representative signed above):

_____ Date: _____

On an annual basis: Lab managers are required to review lab practices and revise the SOP if necessary. If no revision is necessary, indicate by your signature that the SOP has been reviewed.

Annual Review—Signature: [signature] Date: 3-4-10

Annual Review—Signature: _____ Date: _____

Annual Review—Signature: _____ Date: _____

Annual Review—Signature: _____ Date: _____

Sample Preparation Procedure -246: Preparation of Soil/Sediment/Sludge Samples for Diesel Range Organics (DRO) **and Oil Range Organics (ORO)** by SW-846 **Method 3550B, Method 3550C**, and **DRO by** TN DEC

Table of Contents

SECTION	PAGE NO.
Section 1.0 – Scope and Application	2
Section 2.0 – Summary of Method	2
Section 3.0 – Definitions	**2-4**
Section 4.0 – Interferences	**4**
Section 5.0 – Safety	**4**
Section 6.0 – Equipment and Supplies	**4-5**
Section 7.0 – Reagents and Standards	**5-7**
Section 8.0 - Sample Preservation and Storage	**7**
Section 9.0 – Quality Control	**7**
Section 10.0 – Calibration and Standardization	**8**
Section 11.0 – Procedure	**8-11**
Section 12.0 – Data Analysis and Calculations	**11**
Section 13.0 – Method Performance	**11**
Section 14.0 – Pollution Prevention	**11**
Section 15.0 – Waste Management	**11**
Section 16.0 – References	**12**
Section 17.0 – Attachments as Tables, Diagrams and Flowcharts	**12**
Attachment 1	**13**

ORIGINAL MASTER COPY CONTROLLED COPY
If words above are not highlighted, this is an uncontrolled copy of this document.

Sample Preparation Procedure -246: Preparation of Soil/Sediment/Sludge Samples for Diesel Range Organics (DRO) **and Oil Range Organics (ORO) by SW-846 Method 3550B and Method 3550C and for Extractable Petroleum Hydrocarbons by TN DEC**

1.0 Scope and Application

This Standard Operating Procedure (SOP) is applicable to the preparation of soil, sediment or sludge samples for the analysis of extractable total petroleum hydrocarbons (TPH), including diesel range organics (DRO) **and jet fuels**, by the GC technique using the procedures taken from the SW846, and TN DEC methodologies. DRO correspond to the range of alkanes from C_{10} to C_{28} **(C_{12} to C_{40} for TN DEC)** and covering a boiling point range of approximately 170°C to 430°C.

Staff members performing the procedures described in this SOP are responsible for reading, understanding, and complying with the SOP requirements. Supervisors are responsible for directing the analyst to the controlled SOP, and providing adequate explanation of the material contained therein.

This procedure is restricted to use by or under the supervision of analysts experienced in the instrumentation or preparative methods and who have demonstrated the ability to generate acceptable results through QC samples and analyst capability studies.

This procedure encompasses both EPA Methods 3550B and 3550C. All samples for SC DHEC must be processed under EPA 3550C. This SOP is NOT for use with Ohio VAP projects. Please see Ohio VAP specific SOP.

2.0 Summary of Method

A measured weight of sample, 20 grams (25-g for TN DRO), is extracted with methylene chloride using a sonicator. The extract is filtered, dried, and concentrated to a final volume of 1.0-mL prior to analysis by Gas Chromatography with Flame Ionization Detector (GC/FID).

3.0 Definitions

3.1 Method detection limit (MDL) – The minimum concentration of an analyte that can be measured and reported with 99% confidence that the analyte concentration is greater than zero and is determined form analysis of a sample in a given matrix containing the analyte (40 CFR, Part 136, Appendix B.) **The test concentration used to determine the MDL must be greater than the calculated MDL and**

less than ten times the calculated MDL. The test concentration and the calculated MDL must be less than the Reporting Limit (RL) (section 3.2).

3.2 Reporting Limit (RL) – The laboratory reporting limit is at or above the lowest initial calibration standard concentration. For organic methods, values detected below the reporting limit and above the MDL may be reported and qualified as an estimated concentration.

3.**3** A Sample Delivery Group (SDG) is defined by the following, whichever is more frequent:

- each 20 field samples received within a case, or
- each 7 calendar day period during which field samples in a case are received (14 calendar days if requested by the client) beginning with the receipt of the first sample.

NOTE: The DOD- QSM **and** SC DHEC do not accept the SDG approach, unless the samples are prepared in a single **extraction** batch. When a group of up to 20 field samples of a similar matrix are prepared as one **extraction** batch, method-specified QC samples such as a method blank, laboratory control sample, matrix spike, matrix spike duplicate, and matrix duplicate must also be prepared together.

3.**4** **Extraction Batch – a group of to 20 field samples of a similar matrix, method-specified QC samples such as a method blank, laboratory control sample, matrix spike, matrix spike duplicate, and matrix duplicate prepared together at the same time.**

3.5 SC DHEC – South Carolina Department of Health and Environmental Control

3. 6 DOD-QSM – Department of Defense Quality Systems **Manual**

3.7 Ohio VAP – Ohio Environmental Protection Agency Voluntary Action Program

3.8 Diesel fuel – consists primarily of straight-chain hydrocarbons (alkenes and alkanes) ranging in length from C10 to C28 (C12 to C40 for TN). Carbon chain length of C16 and C17 predominate in the mixture, whose composition approximates a bell-shaped curve with C16 and C17 as the mean. Diesel fuel may also contain some aromatic constituents (depending on the source and

refining process), including benzene. They usually account for less than 0.1% of the total product.

3.9 JP-8 (JP meaning Jet Propellant) is a kerosene based jet fuel used by the United States Military. Kerosene is a mixture of chains ranging from C_{12} to C_{15}.

3.10 Marker Vial – a vial of same manufacture and size as sample extract vial containing the volume of liquid desired as a final volume for the sample extract. Marker vials are created using class 'A' pipettes.

4.0 Interferences

4.1 Method interferences may be caused by contaminants in solvents, reagents, glassware, and other sample processing hardware that lead to discrete artifacts and/or elevated baselines which may cause misinterpretation of chromatographic data. All of those materials must be demonstrated to be free from interferences under the conditions of analysis by running laboratory method blanks.

4.2 Matrix interferences may be caused by contaminants that are co-extracted from the sample. The extent of matrix interferences will vary considerably from source to source, depending on the nature of the site being sampled.

5.0 Safety

5.1 Proper personal protective equipment including lab coat, safety glasses, and gloves must be worn when performing this procedure.

5.2 Laboratory staff must review the Chemical Hygiene Plan for general safety policies, and Material Safety Data Sheets for reagents used in the laboratory. The Chemical Hygiene Plan and MSDS are located in the quality assurance department.

6.0 Equipment and Supplies

6.1 General Lab Equipment

6.1.1 Spatulas

6.1.2 Buchner funnel
6.1.3 Whatman 41 filter paper

6.1.4 Teflon beaker

6.2 Sonicator

6.3 Kuderna-Danish (K-D) apparatus consisting of the following pieces:

6.3.1 Concentrator tube, 10-mL, graduated (Kontes K-570040-1029 or equivalent)

6.3.2 Evaporative flask, 500-mL, (Kontes K-570001-0500 or equivalent)

6.3.3 Snyder column, three-ball macro, (Kontes K-503000-0121 or equivalent)

6.4 Silicon carbide boiling chips, approximately 10/40 mesh.

6.1.1 Prior to use, heat the boiling chips to 400°C for thirty minutes or Soxhlet extract them with methylene chloride.

6.5 Water bath, heated, with concentric ring cover, capable of temperature control ±2°C. The bath **must** be located under a ventilation hood.

6.6 Top-loading balance, capable of weighing accurately to 0.01-g

6.7 Vials with Teflon®-lined septa and **screw cap or** crimp tops, 1**.8**-mL amber

6.8 Graduated Liter jars with lids

6.9 Nitrogen evaporation device equipped with a water bath that can be maintained at 35-40° C. The N-Evap by Organomation Associates, Inc. (South Berlin, MA) or equivalent is suitable.

7.0 Reagents and Standards

Note: All spiking standard information is entered into the LIMS. To obtain information on any standard, access Element, click on "Laboratory," and scroll down and access "Standards." Standards can be sorted by Department. Select the standard you would like to access. The view will show lot number, prepared dates, solvent, vendor, composition, and concentration.

All standards are prepared in the Organic Standards Laboratory. Standards are stored separately from samples at 2-6 ^{o}C in the sample preparation laboratory or the Organic Standards laboratory when not in use.

Note: All standards and reagents are subject to change in vendor and in concentration. The Reporting Limits are also subject to change, but must remain at or above the lowest point in the calibration.

7.1 Reagent water – All water used in this procedure must be equivalent to ASTM Type II water (as it relates to specific conductance and specific resistance) which is demonstrated to meet the blank contamination acceptance criteria contained in the applicable analytical SOP. It is referred to throughout the remainder of this SOP as reagent water.

7.2 Sodium sulfate, Mallinckrodt anhydrous, reagent grade, heated at 400°C for four hours, cooled, and stored in a glass bottle.

7.3 Methylene chloride, pesticide grade or equivalent. (Use only from glass bottles.)

7.4 Methanol – pesticide grade or equivalent

7.5 Stock Diesel Spiking Solution – NSI Diesel Fuel #2 (Catalog # UST-145) at a concentration of 50,000-µg/mL. The expiration date for this solution is provided by the manufacturer.

7.6 Prepare the Diesel Spiking Solution # 4028 by adding 2.5-mL of NSI Diesel Fuel #2 to methanol in a 25-mL volumetric flask. Dilute to volume with methanol. The concentration of the resulting solution is 5000-µg/mL. Prepare this solution every six months.

7.7 Stock Restek Motor Oil Standard (Catalog# 31464) – 50,000 µg/mL motor oil in methylene chloride (or equivalent).

7.8 Prepare the Oil Spiking Solution by adding 1.0-mL of Stock Restek Motor Oil Standard to methanol in a 10-mL volumetric flask. Dilute to volume with acetone. The concentration of the resulting solution is 5000-µg/mL. Prepare this solution every six months.

7.**9** DRO Surrogate Stock Solution – NSI o-Terphenyl (Catalog # W-1341H) at a concentration of 10,000-µg/mL. The expiration date for this solution is provided by the manufacturer.

7.**10** Prepare the DRO Surrogate Solution #444 by adding 5.0-mL of NSI o-Terphenyl to methanol in a 100-mL volumetric flask. Dilute to volume with methanol. The concentration of the resulting solution is 500-µg/mL. Prepare this solution every six months.

8.0 Sample Preservation and Storage

8.1 Samples are preserved and stored according to the tables in Sample Control SOP 4.1, "Receiving Samples" and 4.6, "Storing Samples." Sample holding times are also listed.

8.2 Samples are obtained from the Custodian out of cold storage. They **must** be allowed to come to room temperature prior to sample preparation. After preparation, they are returned to the Custodian and placed in the cooler.

8.3 Soil samples must be extracted within 14 days of collection.

9.0 Quality Control

9.1 Method Blank

9.1.1 A method blank must be **prepared** with e**ach extraction** batch**.**

9.2 Laboratory Control Sample

9.2.1 A laboratory control sample (LCS) must be **prepared** with **each extraction** batch.

9.2.2 Duplicate LCSs must be prepared with each **extraction** batch for TN DRO.

9.3 Matrix Spike, Matrix Spike Duplicate and Duplicate Samples

9.3.1 A matrix spike (MS) and matrix spike duplicate (MSD) are prepared for **each SDG batch .**

9.3.1.1 DOD-QSM and SC DHEC require a matrix spike (MS) and matrix spike duplicate (MSD) be prepared with each extraction batch.

9.3.2 A duplicate sample may be prepared instead of the MSD, if samples are expected to contain target compounds.

10.0 Calibration and Standardization

10.1 Balance Calibration

10.1.1 Ensure the balance is calibrated for the day prior to weighing samples. Refer to Quality Control SOP 13.16, "Top Loading Balance Calibration and Maintenance."

11.0 Procedure

Documentation must follow the requirements in Quality Control SOP 13.6, "Proper Documentation Procedures". The sample preparation technician must complete the extraction worksheet (**for example see** Attachment 1). Any unused portion of the worksheet must be Z'd out. The laboratory supervisor or his/her designee reviews the completed worksheet for completeness and accuracy, and then signs and the worksheet. The worksheet accompanies the samples to the analytical laboratory. Include on the worksheet the manufacturer and lot number of reagents/solvents used. **If samples are to be analyzed for ORO only substitute ORO spiking solution for DRO spiking solution in the following instructions. If samples are to be analyzed for DRO and ORO add ORO spiking solution in addition to DRO spiking solution in the following instructions.**

11.1 Rinse all glassware used in this procedure with methylene chloride prior to use. Discard the rinse solvent in the labeled waste container.

11.2 Allow samples to come to room temperature. Mix the sample in the container thoroughly before taking an aliquot. Discard any foreign objects such as sticks, stones, and leaves.

11.3 Weigh out 20.0-g of sample (25.0-g for TN DRO) into a Teflon® beaker. Record the weight for each sample on the extraction worksheet to the nearest 0.1 g. Add 50-g of sodium sulfate and stir until a homogeneous sandy texture is achieved. Add 0.5-mL of the DRO Surrogate Solution #444.

11.3.1 Note: For Method 3550C, the surrogate spike and validation spike (for the LCS and MS/MSD) are added prior to the addition of the sodium sulfate.

11.4 To prepare the matrix spike and matrix spike duplicate (MS/MSD), choose a sample to use for original, unless a sample is designated to use for QC on the extraction worksheet. Weigh out two additional aliquots of the sample into two Teflon® beakers. Add 50-g of sodium sulfate to each sample aliquot and stir until a homogeneous sandy texture is achieved. Add 0.5-mL of DRO Surrogate Solution #444 and 0.5-mL of DRO Spiking Solution #4028 to each sample aliquot.

11.4.1 For TN DRO MS/MSD, add 0.1-mL of DRO Spiking Solution #4028 and 0.5-mL of DRO Surrogate Solution #444 to each sample aliquot.

11.4.2 Note: For Method 3550C, the surrogate spike and validation spike (for the LCS and MS/MSD) are added prior to the addition of the sodium sulfate.

11.5 To prepare the LCS, weigh out 50.0-g of sodium sulfate in a Teflon® beaker. Add 0.5-mL of DRO Surrogate Spiking Solution #444 and 0.5-mL of DRO Spiking Solution #4028.

11.5.1 For TN DRO LCS, add 0.1-mL of DRO Spiking Solution #4028 and 0.5-mL of DRO Surrogate Solution #444 to each sample aliquot. For TN DRO, a LCSD must also be prepared.

11.5.2 Note: For Method 3550C, the surrogate spike and validation spike (for the LCS and MS/MSD) are added prior to the addition of the sodium sulfate.

11.6 To prepare the method blank, weigh out 50.0-g of sodium sulfate in a Teflon® beaker and add 0.5-mL of the DRO Surrogate Solution #444.

11.6.1 Note: For Method 3550C, the surrogate spike and validation spike (for the LCS and MS/MSD) are added prior to the addition of the sodium sulfate.

11.7 Add 100-mL of methylene chloride to all samples.

11.8 Sonicate the samples for 3 minutes with the ¾ inch sonicator horn ½ inch below the surface of the solvent.

11.9 Decant the solvent layer into Buchner funnel containing Whatman 41 filter paper. Filter into a 500-mL sidearm flask using a vacuum.

11.10 Repeat the extraction twice more using 100-mL aliquots of methylene chloride. **Before each extraction, thoroughly mix the solid residue, and make certain that the sodium sulfate is free flowing and not a consolidated mass. As needed, break up large lumps with a clean spatula. Decant and filter the extraction solvent after each sonication as above.** Collect these extracts in the same flask described in 11.9.

11.11 Pour the combined extracts into a K-D apparatus. Rinse the beaker with 20 to 30-mL of methylene chloride to complete the transfer.

11.11.1 Note: For Method 3550C, the extract is required to be poured through a powder funnel inserted into the top of the KD apparatus and containing a glass wool plug and 10 g of furnaced sodium sulfate.

11.12 Add one or two clean boiling chips to the evaporative flask and attach a three-ball Snyder column. Wet the Snyder column by adding approximately 1-mL of methylene chloride to the top.

11.13 Place the K-D apparatus on a hot water bath so that the concentrator tube is partially immersed in the hot water, and the entire lower rounded surface of the flask is bathed with hot vapor. The temperature of the water bath should be at approximately 100o C or adjusted as required to complete the concentration in 15 to 20 minutes.

11.14 When the apparent volume of extract reaches 4-mL, remove the K-D apparatus and allow it to drain and cool for at least 10 minutes.

11.15 Remove the Snyder column and evaporative flask and place the concentrator tube on the Organomation (nitrogen evaporation apparatus) or use the micro-Snyder technique to concentrate the extract**. Concentrate to an apparent volume of 0.3-mL.**

11.16 Quantitatively transfer to a 1.8 –mL screw cap or crimp top vial. Pipete the extract into the vial. Rinse the concentrator tube with approximately 0.4-mL of methylene chloride and add the rinseate to the vial. Adjust the final extract volume to 1.0-mL using the 1.0 – mL Marker Vial.

11.17 Attach a label to the vial. The label **must** contain the following information:

CompuChem Number:	XXXXXX
Procedure Code:	-246
Date Extracted:	XX/XX/XX

11.**18** Deliver the batch of labeled extracts, with the completed extraction worksheet and internal chain-of-custody form, to the GC analytical laboratory. Place the extracts in the designated cold storage unit.

12.0 <u>Data Analysis and Calculations</u>

N/A

13.0 Method Performance

This method was validated through in-house laboratory studies of method detection limits and precision and accuracy for single analyst. The data are retained in electronic form on intranet QA server and in hardcopy form in the QA department or in the data storage room.

14.0 Pollution Prevention

The solvents used in this procedure pose little threat to the environment when recycled and managed properly. Pollution prevention encompasses any technique that reduces or eliminates the quantity or toxicity of waste at the point of generation. Numerous opportunities for pollution prevention exist in laboratory operation. The EPA has established a preferred hierarchy of environmental management techniques that places pollution prevention as the management option of first choice. Whenever feasible, laboratory personnel should use pollution prevention techniques to address their waste generation. When wastes cannot be feasibly reduced at the source, the Agency recommends recycling as the next best thing. See SOP 12.1, "Hazardous Waste Disposal", regarding laboratory procedures for recycling solvent waste streams.

15.0 Waste Management

It is the laboratory's responsibility to comply with all federal, state, and local regulations governing waste management, particularly the hazardous waste identification rules and land disposal restrictions, and to protect the air, water, and land by minimizing and controlling all releases from fume hoods and bench operations. Compliance with all sewage discharge permits and regulations is also required.

Samples preserved with HCl, HNO_3, or H_2SO_4 to pH <2 are hazardous and must be handled as hazardous waste.

16.0 References

16.1 "Test Methods for Evaluating Solid Wastes: Physical/Chemical Methods", SW846, 3rd Edition, Update III, 12/96, Method 3550B.

16.2 "Test Methods for Evaluating Solid Waste, Physical/Chemical Methods", SW-846, 3rd Edition, Update IV, 02/07, Method 3550C

16.**3** Leaking Underground Fuel Tank Field Manual: Guidelines for Site Assessment, Cleanup, and Underground Storage Tank Closure. State of California, Leaking Underground Fuel Tank Task Force. May 1988.

16.**4** "Method for Determination of Extractable Petroleum Hydrocarbons by GC/FID", TN DEC, March 1999

16.**5** Standard Methods for the Examination of Water and Wastewater, 20th (1998) Edition, Method 1080

16.**6** **NELAC Standards, effective July 2003, plus revisions**

16.**7** EPA QA-G6: Guidance for Preparing Standard Operating Procedures (SOPs) EPA/600/B-07/001, April 2007.

16.**8** CompuChem Quality Manual, Revision **11**, June **23**, **2008, plus revisions**

16.**9** Sample Control SOP 4.6, "Storing Samples"

16.**10** Quality Control SOP 13.16, "Top Loading Balance Calibration and Maintenance."

17.0 Attachments as Tables, Diagrams and Flowcharts

17.1 Attachment 1 – Extraction Worksheet

Attachment 1

ASSIGNED TO: _____

EMP ID NUMBER: _____

COMPUCHEM
EXTRACTION WORKSHEET
DRO/ORO in Water
by 8015B/8015C/TN DRO (Circle One)

DATE EXTRACTED/POSTED: _____

BATCH NO.: _____

-1003

COMPUCHEM NUMBER	CLIENT SAMPLE ID	QC SAMPLE TYPE	SAMPLE VOLUME (ml)	FINAL VOLUME (ml)	COMMENTS
					Note: 2.5mL final Volume for 8015B and 8015C; 1.0mL final Volume for TN DRO
					USE 0.5ML MOTOR OIL SPIKE IN LCS/MS/MSDORO

			EXT. TPH	SURROGATE & SPIKE ADDED BY		
	o-terphenyl	No.	444			FINAL VOLUME VERIFIED _____
	SURROGATE	Amt.	0.5 ml	_____ /	_____	
		Lot #		INITIALS	DATE	SUPERVISOR REVIEWED _____
	SPIKE	No.	4028			
	8015B/C Spike	Amt.	0.5 ml	Witness	_____ / _____	
	TN DRO Spike	Amt.	200µL			
		Lot #			Initials Date	

Analysts Initials. Extracted_____ KD _____ N2 _____ Bottle up_____

Manufacturer and lot number of reagents/solvents used :

CH_2Cl_2 Na_2SO_4

Rev. 03/11/09 jr

CompuChem
A Division Of
Liberty Analytical Corp.

501 Madison Avenue
Cary, NC 27513

NELAP accredited

SOP DOCUMENTATION FORM

This form must accompany all new and revised Standard Operating Procedures (SOPs) when you turn them in to Quality Assurance for review. Please fill out the entire block below (except effective date).

This is a new procedure _____ revised procedure ✓ outdated procedure (archive) _____

- Procedure Code: SPP -069 SOP Section #: 2.2.4.1 Revision #: 12

SOP Title: Sample Preparation for Pesticides/PCBs in Water by SW-846

Effective date: (QA fills in) 04-07-2010

- Procedure prepared by: Bob Maiera Date: 04-07-2010
- Procedure approved by: (If the manager prepared the SOP, a qualified second party should sign) Date: 04-07-2010
- Reason for change: Address comment from SC DHEC SOP review plus changes from internal review
- This procedure meets the requirements of the following approved method references: SW-846 Update III, 3rd Edition, 12/96 Method 3510C

Procedure approved by a QA Representative (unless QA Representative signed above):

_____ Date: _____

On an annual basis: Lab managers are required to review lab practices and revise the SOP if necessary. If no revision is necessary, indicate by your signature that the SOP has been reviewed.

Annual Review—Signature: _____ Date: _____

Annual Review—Signature: _____ Date: _____

Annual Review—Signature: _____ Date: _____

Annual Review—Signature: _____ Date: _____

Sample Preparation Procedure -069: Sample Preparation for Pesticides/PCBs in Water by SW846

Table of Contents

SECTION	PAGE NO.
Section 1.0 – Scope and Application	2
Section 2.0 – Summary of Method	2
Section 3.0 – Definitions	2-3
Section 4.0 – Interferences	3
Section 5.0 – Safety	3-4
Section 6.0 – Equipment and Supplies	4-5
Section 7.0 – Reagents and Standards	5-8
Section 8.0 - Sample Preservation and Storage	8
Section 9.0 – Quality Control	8-9
Section 10.0 – Calibration and Standardization	9
Section 11.0 – Procedure	**9-11**
Section 12.0 – Data Analysis and Calculations	12
Section 13.0 – Method Performance	12
Section 14.0 – Pollution Prevention	12
Section 15.0 – Waste Management	12
Section 16.0 – References	**12-13**
Section 17.0 – Attachments as Tables, Diagrams and Flowcharts	13
Attachment 1	14

ORIGINAL MASTER COPY CONTROLLED COPY
If words above are not highlighted, this is an uncontrolled copy of this document.

Sample Preparation Procedure -069: Sample Preparation for Pesticides/PCBs in Water by SW846

1.0 Scope and Application

This Standard Operation Procedure (SOP) describes the preparation of aqueous samples using the separatory funnel technique (Method 3510C) for the analysis of pesticides/PCBs following Method 8081A/8082.

Staff members performing the procedures described in this SOP are responsible for reading, understanding, and complying with the SOP requirements. Supervisors are responsible for directing the analyst to the controlled SOP, and providing adequate explanation of the material contained therein.

This procedure is restricted to use by or under the supervision of analysts experienced in the instrumentation or preparative methods and who have demonstrated the ability to generate acceptable results through QC samples and analyst capability studies.

2.0 Summary

A measured volume of sample, approximately 1 liter, is solvent extracted with methylene chloride using a separatory funnel. The methylene chloride extract is dried, exchanged to hexane, and adjusted to a final volume of **5.0** mL. Optional cleanup techniques such as Florisil column cleanup, Method 3620B, may be used

3.0 Definitions

3.1 Method detection limit (MDL) – The minimum concentration of an analyte that can be measured and reported with 99% confidence that the analyte concentration is greater than zero and is determined from analysis of a sample in a given matrix containing the analyte (40 CFR, Part 136, Appendix B.)

3.2 A Sample Delivery Group (SDG) is defined by the following, whichever is more frequent:

- each 20 field samples received within a case, or
- each 7 calendar day period during which field samples in a case are received (14 calendar days if requested by client) beginning with the receipt of the first sample.

NOTE: The DOD-QSM and SC DHEC do not accept the SDG approach, unless the samples are prepared in a single batch. When a group of up to 20 field samples of a similar matrix are prepared as one batch, method-specified QC samples such as a method blank, laboratory control sample, matrix spike, matrix spike duplicate, and matrix duplicate must also be prepared together.

3.3 SC DHEC – South Carolina Department of Health and Environmental Control

3.4 DOD-QSM – Department of Defense Quality Systems Manual

4.0 Interferences

4.1 Interferences may be caused by contaminants in solvent, reagents, glassware, and other sample processing hardware that lead to discrete artifacts and/or elevated baselines in gas chromatograms (GC). All of these materials must be routinely demonstrated to be free from interferences under conditions of the analysis by running laboratory reagent blanks.

4.2 Interferences by phthalate esters can pose a major problem in pesticide analysis when using the electron capture detector (ECD). These compounds generally appear in the chromatogram as broad eluting peaks. Common flexible plastics contain varying amounts of phthalates. These phthalates are easily extracted or leached from such materials during laboratory operations. Cross-contamination of clean glassware routinely occurs when plastics are handled. Interference from phthalates can best be minimized by avoiding the use of plastics in the laboratory. Exhaustive cleanup of reagents and glassware may be required to eliminate background phthalate contamination.

4.3 Matrix interference may be caused by contaminants that are co-extracted from the sample. The extent of matrix interference will vary considerably from source to source, depending on the nature and diversity of the site being sampled. The Florisil column cleanup procedures may be used to overcome such interference in order to achieve the MDLs.

5.0 Safety

5.1 Appropriate protective equipment and clothing must be used under the assumption that all samples are potentially hazardous. During sample preparation safety glasses, gloves and lab coats are a minimum requirement. The persistent presence of noxious odors may be indicative of failure of the

laboratory ventilation system and must be reported to a supervisor or manager.

5.2 Laboratory staff must review the Chemical Hygiene Plan for general safety policies, and Material Safety Data Sheets (MSDS) for reagents used in the laboratory. The Chemical Hygiene Plan and MSDS are located in the quality assurance department.

6.0 Equipment and Supplies

6.1 Glassware

6.1.1 Separatory funnel, 2000 mL, with Teflon® stopcock

6.1.2 1000 mL graduated cylinders

6.1.3 250 mL Erlenmeyer flask, glass

6.1.4 Concentrator tube, 10 mL, graduated (Kontes K-570050-1025, or equivalent).

6.1.5 Evaporative flask, Kuderna-Danish, 500 mL (Kontes K-570001-0500 or equivalent). Attach to the concentrator tube with springs, rubber bands, or a blue Keck clip.

6.1.6 Snyder column, three-ball macro (Kontes K-503000-0121, or equivalent)

6.1.7 Graduated Glass jars – 1 L

6.2 Pyrex glass wool: Heat in a 400°C oven for 4 hours before use.

6.3 Powder funnels

6.4 Silicon carbide boiling chips, approximately 10/40 mesh.

6.4.1 Heat to 400 °C for 30 minutes, or Soxhlet extract with methylene chloride for 4 hours.

6.5 Water bath, heated with concentric ring cover, capable of temperature control within ± 2 °C. The bath should be used in a hood.

6.6 Nitrogen evaporation device equipped with a water bath that can be maintained at 35-40 °C. The N-Evap by Organomation Associates, Inc. South Berlin, MA (or equivalent) is suitable.

6.7 Wide range pH paper (0-14 pH range).

6.8 Pipets

6.8.1 1.0 mL serological pipets

6.8.2 Pasteur pipets, glass, disposable

6.9 10-mL amber serum glass vials, with crimp-top aluminum seal and Teflon-faced septa.

7.0 Reagents and Standards

Note: All spiking standard information is entered into the LIMS. To obtain information on any standard, access Element, click on "Laboratory," and scroll down and access "Standards." Standards can be sorted by Department. Select the standard you would like to access. The view will show lot number, prepared dates, solvent, vendor, composition, and concentration.

All standards are prepared in the Organic Standards Laboratory. Standards are stored separately from samples at 2-6 ^{o}C in the laboratory when not in use.

7.1 Reagent water – All water used in this procedure must be equivalent to ASTM Type II water (as it relates to specific conductance and specific resistance) which is demonstrated to meet the blank contamination acceptance criteria contained in the applicable analytical SOP. It is referred to throughout the remainder of this SOP as reagent water.

7.2 Solvents - pesticide grade or equivalent.

7.2.1 Methylene chloride

7.2.2 Hexane

7.3 Sodium sulfate, (ACS grade) granular, anhydrous

7.3.1 Heat at 400 ° C for 4 hours in a shallow tray. Cool and store in glass jars.

7.4 Sodium hydroxide solution (10 N), ACS grade

7.4.1 Dissolve 40 g of NaOH pellets in reagent water and dilute to 100 mL.

7.5 Sulfuric acid concentrated

7.6 Surrogate Stock Solution

7.6.1 Restek SOM01.1 Pesticide Surrogate Standard solution (Catalog # 32453) containing 2,4,5,6-Tetrachloro-m-xylene (TCX) at 100 µg/mL and Decachlorobiphenyl (DCB) at 200 µg/mL in acetone. The expiration date for this solution is provided by the manufacturer.

7.7 Surrogate solution #**449**

7.7.1 Prepare the surrogate solution #**449** by adding 1.2 mL of Restek SOM01.1 Pesticide Surrogate Standard to acetone in a 200 mL volumetric flask and dilute to volume with acetone. The resulting surrogate solution contains TCX at 0.6 µg/mL and DCB at 1.2 µg/mL. Prepare this solution every six months.

7.8 Pesticide Stock Spiking Solutions

7.8.1 NSI Custom Pesticide Mix #1 (Custom# Q-4302) containing the following compounds in a 1:1 hexane/toluene solution at 20 µg/mL:

Aldrin	alpha-BHC
beta-BHC	Delta-BHC
gamma-BHC (Lindane)	alpha-Chlordane
Gamma-Chlordane	Endosulfan I
Heptachlor	Heptachlor epoxide (isomer B)
Isodrin	

7.8.2 NSI Custom Pesticide Mix #2 (Custom# Q-4303) containing the following compounds in a 1:1 hexane/toluene solution at 50 µg/mL:

4, 4'-DDT	4, 4'-DDD
4, 4'-DDE	Dieldrin
Endosulfan II	Endosulfan sulfate
Endrin	Endrin aldehyde
Endrin ketone	Methoxychlor

7.8.3 Pesticide Matrix Spiking Solution #4030

7.8.3.1 Prepare the Pesticide Matrix Spiking Solution #4030 by adding 0.75 mL of NSI Custom Pesticide Mix #1 and 0.75 mL NSI Custom Pesticide Mix #2 to methanol in a 100 mL volumetric flask. Dilute to volume with methanol. The resulting concentrations are 0.15-µg/mL for the compounds in section 7.8.1 and 0.375 µg/mL for the compounds in **Section** 7.8.2. Prepare this solution every six months.

7.8.4 A matrix spike solution containing Technical Chlordane or Toxaphene is available to clients that request that these compounds be spiked into matrix spikes and laboratory control samples. Technical Chlordane and Toxaphene are spiked separately.

7.8.5 Custom TCLP Pesticide Spike (Custom #Q-4740) is used as the spiking solution for Toxaphene. This solution contains Toxaphene at 10 µg/mL. The expiration date for this solution is provided by the manufacturer.

7.8.6 Stock Technical Chlordane Standard – Restek Technical Chlordane Standard (Catalog # 32072) at 5000 µg/mL in isooctane. The expiration date for this solution is provided by the manufacturer.

7.8.6.1 Prepare the Technical Chlordane spiking solution by adding 10 µL of Restek Technical Chlordane Standard to acetone in a 50 mL volumetric flask and dilute to volume with acetone. Prepare this solution every six months.

7.9 PCB Stock Spiking Solution

7.9.1 Restek Aroclor® 1016/1260 Mix (Catalog # 32039) containing both Aroclors at 1000 µg/mL. The expiration date for this solution is provided by the manufacturer.

7.9.1.1 PCB Spiking Solution #4615

7.9.1.1.1 Prepare the PCB spiking solution #4615 by adding 0.25 mL of Restek Aroclor® 1016/1260 Mix to methanol in a 50 mL volumetric flask. Dilute to volume with methanol. The resulting concentration of the spiking solution is 5.0 µg/mL. Prepare this solution every six months.

8.0 Sample Preservation and Storage

8.1 Samples are preserved and stored according to the tables in Sample Control SOP 4.1, "Receiving Samples" and 4.6, "Storing Samples." Sample holding times are also listed.

8.2 All samples must be extracted within seven days of sample collection. All extracts must be analyzed within 40 days of extraction.

8.3 Prior to analysis, all extracts must be stored under refrigeration at 2 – 4 ^{o} C in the reach-in storage unit in the laboratory. After analysis, extracts are returned to Sample Control for long-term storage and disposal.

9.0 Quality Control

9.1 Method Blank

9.1.1 A method blank must be prepared with every batch of up to 20 samples.

9.2 Laboratory Control Sample

9.2.1 A laboratory control sample (LCS), matrix blank spike for NYSASP, must be prepared with every batch of up to 20 samples.

9.3 Matrix Spike, Matrix Spike Duplicate, and Duplicate Sample

9.3.1 A matrix spike and matrix spike duplicate (MS/MSD) must be prepared for every batch of up to 20 samples.

9.3.2 A duplicate sample may be prepared instead of the MSD, if samples are expected to contain target compounds.

10.0 Calibration and Standardization

NA

11.0 Procedure

Documentation must follow the requirements in Quality Control SOP 13.6, "Proper Documentation Procedures".

11.1 Rinse all glassware with methylene chloride before use, including the powder funnel containing sodium sulfate used to dry the extract. Do not use any glassware that appears to be dirty or cracked.

11.2 Thoroughly mix the sample before aliquotting. Using a 1 liter graduated cylinder or graduated glass jar, measure out a 1 liter sample aliquot and transfer to a two-liter separatory funnel. Add 0.5 mL of #449 surrogate spiking solution to the separatory funnel using a volumetric pipette and mix well. Record the sample volume on the extraction worksheet (Attachment 1).

11.3 Check the pH of the sample with wide range paper and adjust to a pH to between 5 and 9 with 10N sodium hydroxide or concentrated sulfuric acid.

11.4 Prepare the method blank by adding 1 liter of reagent water to a separatory funnel. Add 0.5 mL of surrogate #449.

11.5 Prepare the duplicate matrix spikes (MS/MSD) following step 11.2 using two aliquots from one original unspiked sample. Add 1.0 mL of pesticide spiking solution #4030 and 0.5 mL of surrogate spiking solution #449 to the MS/MSD.

11.6 Prepare a LCS by adding 1 liter of reagent water to a separatory funnel. Add 1.0 mL of pesticide spiking solution #4030 and 0.5 mL of surrogate spiking solution #449.

11.7 Add 60 mL of methylene chloride to each separatory funnel and extract by shaking the funnel for 2 minutes, with periodic venting under the hood to release excess pressure.

11.8 Allow the organic layer to separate from the water phase for a minimum of 10 minutes. If the emulsion interface between the layers is more than one-third of the volume of the organic solvent, employ mechanical techniques to complete the phase separation. The optimum technique depends on the

sample, and may include stirring, filtration of the emulsion through glass wool, centrifugation, or other physical means.

11.8.1 To break an emulsion using centrifugation, drain the emulsion into a centrifuge bottle. Place the bottle in the centrifuge. (Always use a bottle with approximately the sample volume of methylene chloride as a counter-weight, if only one sample is being centrifuged). Secure the lid of the centrifuge and start. Let the sample(s) spin for 2 minutes at 2000 RPM and turn off the centrifuge. Once the sample(s) have stopped spinning, remove the bottles. Pour the sample extract back into the appropriate separatory funnel. Rinse the bottle with 5 to 10 mL of methylene chloride and pour the rinse into the separatory funnel.

11.9 When methylene chloride layer (bottom layer) has been separated from the sample, drain the methylene chloride through a powder funnel containing glasswool and sodium sulfate into the Erlenmeyer flask.

11.10 Add a second 60 mL volume of methylene chloride to each separatory funnel and repeat the extraction, combining the extracts in the Erlenmeyer flask. Perform a third extraction in the same manner.

11.11 Assemble a 500 mL K-D evaporative flask, 10 mL concentrator tube, and three-ball macro Snyder column.

11.12 Pour the combined extract into K-D apparatus. Rinse the Erlenmeyer flask with 20 to 30 of methylene chloride to complete the quantitative transfer.

11.13 Add one or two clean boiling chips to the evaporative flask and attach a three-ball macro Snyder column. Wet the Snyder column by adding approximately 1 mL of methylene chloride to the top of the column.

11.14 Place the K-D apparatus on a hot water bath (80 - 90 °C) so that the concentrator tube is partially immersed in the hot water and the entire lower rounded surface of the flask is bathed with hot vapor. Adjust the vertical position of the apparatus and the water temperature as required to complete the concentration in 15 - 30 minutes. At the proper rate of distillation, the balls of the Snyder column will actively chatter, but the chamber will not flood with condensed solvent. When the apparent volume of extract reaches 4 mL, remove the K-D apparatus from the bath. Allow it to drain and cool.

11.15 After the sample has cooled, add 50 mL of hexane to the K-D. Mix the solvent in the K-D apparatus by carefully tilting the K-D and allowing the solvent to flow out of the attached concentrator tube. Gently swirl the K-D to mix the hexane with the extract.

11.16 Wet the top of the Snyder column by adding approximately 1 mL of hexane. Place the K-D apparatus on the hot water bath. When the apparent volume of the extract reaches 4 mL, remove the K-D apparatus and allow it to drain and cool for at least 10 minutes.

11.17 Remove the Snyder column and then carefully remove the 10 mL concentrator tube.

NOTE: During all concentration steps, the solvent extract must never be allowed to go to dryness.

11.18 Final Concentration technique

11.18.1 Place the concentrator tube in the N-Evap and evaporate the solvent volume to 5.0 mL using a gentle stream of clean, dry nitrogen. Alternately use micro-Snyder concentration.

11.19 Quantitatively transfer the contents of the concentrator tube to a clear 5 mL vial. Label the vial with the CompuChem number, procedure code (-069), and date extracted.

11.20 Complete all extraction worksheet, verifying that final volumes are correct. Any unused portion of the worksheet must be "z'd" out. The laboratory supervisor (or his or her designee) reviews the completed worksheet for accuracy and completeness and then signs it. All information fields must be completed including the manufacturer and lot number of reagents/solvents used.

11.21 Deliver the worksheet and sample extracts to the analytical laboratory.

11.22 Florisil column cleanup using Sample Preparation Procedure –938A, “Manual Florisil Cartridge Cleanup for Pesticide/PCB Analysis” may be performed if indicated by the GC laboratory after initial analysis.

12.0 Data Analysis and Calculations

N/A

13.0 Method Performance

This method was validated through in-house laboratory studies of method detection limits and precision and accuracy for single analyst. The data are retained in electronic form on intranet QA server and in hardcopy form in the QA department or in the data storage room.

14.0 Pollution Prevention

The solvents used in this procedure pose little threat to the environment when recycled and managed properly. Pollution prevention encompasses any technique that reduces or eliminates the quantity or toxicity of waste at the point of generation. Numerous opportunities for pollution prevention exist in laboratory operation. The EPA has established a preferred hierarchy of environmental management techniques that places pollution prevention as the management option of first choice. Whenever feasible, laboratory personnel should use pollution prevention techniques to address their waste generation. When wastes cannot be feasibly reduced at the source, the Agency recommends recycling as the next best thing. See SOP 12.1, "Hazardous Waste Disposal", regarding laboratory procedures for recycling solvent waste streams.

15.0 Waste Management

It is the laboratory's responsibility to comply with all federal, state, and local regulations governing waste management, particularly the hazardous waste identification rules and land disposal restrictions, and to protect the air, water, and land by minimizing and controlling all releases from fume hoods and bench operations. Compliance with all sewage discharge permits and regulations is also required.

Samples preserved with HCl, HNO_3, or H_2SO_4 to pH <2 are hazardous and must be handled as hazardous waste.

16.0 References

16.1 "Test Methods for Evaluating Solid Wastes: Physical/Chemical Methods", SW846, 3rd Edition, Update III, 12/96, Method 3510C

16.2 Standard Methods for the Examination of Water and Wastewater, 20th (1998) Edition, Method 1080

16.**3** NELAC Standards, **effective July 2003, plus revisions**

16.**4** EPA QA-G6: Guidance for the Preparing Standard Operating Procedures (SOPs), EPA/600/B-07/001, April 2007.

16.**5** CompuChem Quality Manual, **Revision 13, November 17, 2009, plus revisions**

16.**6** Sample Control SOP 4.6, "Storing Samples"

17.0 Attachments as Tables, Diagrams and Flowcharts

17.1 Attachment 1 – Extraction Worksheet

Attachment 1

COMPUCHEM
EXTRACTION WORKSHEET
PEST/PCB IN WATER BY METHOD 3510C for $0$1A, $0$1B, $0$2, and $0$2A

ASSIGNED TO: _____ DATE/TIME EXTRACTED/POSTED _____

EMPLOYEE ID # _____ -069 BATCH NUMBER _____

	COMPUCHEM NUMBER	CLIENT SAMPLE ID	QC SAMPLE TYPE	SAMPLE VOLUME (ml)	RECORD INITIAL pH	pH ADJUSTED (Y/N)	FINAL VOL. (ml)	COMMENTS
1								
2								
3								
4								
5								FLORISIL (3620B) PERFORMED Y / N
6								
7								
8								Add 1.0 ml 4615 to PCBLCS & PCBSS
9								
10								
11								
12								
13								
14								
15								
16								
17								
18								
19								
20								
21								
22								
23								
24								
25								
26								
27								

	#	AMOUNT	LOT #	SURROGATE AND SPIKE ADDED BY:
SURROGATE	449	0.5 mL		
PEST SPIKE	4030	1.0 mL		_____ / _____
PCB SPIKE	4615	1.0 mL		INITIALS DATE

FINAL VOL. VERIFIED: _____

SUPERVISOR REVIEW: _____

Witness _____ / _____
Initial Date

Analysts initials. Extracted _____ KD_____ N2_____ Bottle up_____

Manufacturer and lot number of reagents/solvents _____

Rev. 3/16/10:RM

Notice: This page subject to change without notice.

CompuChem
A Division Of
Liberty Analytical Corp.

501 Madison Avenue
Cary, NC 27513

NELAP accredited

SOP DOCUMENTATION FORM

This form must accompany all new and revised Standard Operating Procedures (SOPs) when you turn them in to Quality Assurance for review. Please fill out the entire block below (except effective date).

This is a new procedure _____ revised procedure ✓ outdated procedure (archive) _____

- Procedure Code: SPP -733 SOP Section #: 2.2.4.2 Revision #: 12

SOP Title: Low Level Preparation for Analysis of Pesticides/PCBs in Soil/Sediment/Sludge by SW-846

Effective date: (QA fills in) 04-05-2010

- Procedure prepared by: Bob Meiner Date: 04-01-2010
- Procedure approved by: (If the manager prepared the SOP, a qualified second party should sign) Date: 04-02-2010
- Reason for change: Address comment from SC DHEC SOP review plus changes from internal review
- This procedure meets the requirements of the following approved method references: SW-846 Update III, 3rd Edition, 12/96 Method 3550B; SW-846 Update IV, 3rd Edition, 2/07 Method 3550C

Procedure approved by a QA Representative (unless QA Representative signed above):

_____ Date: _____

On an annual basis: Lab managers are required to review lab practices and revise the SOP if necessary. If no revision is necessary, indicate by your signature that the SOP has been reviewed.

Annual Review—Signature: _____ Date: _____

Annual Review—Signature: _____ Date: _____

Annual Review—Signature: _____ Date: _____

Annual Review—Signature: _____ Date: _____

Sample Preparation Procedure –733 (SPP-733=SPP-169 → SPP-940) Low Level Preparation for Analysis of Pesticides/PCBs in Soil/Sediment/Sludge by SW-846

Table of Contents

SECTION	PAGE NO.
Section 1.0 – Scope and Application	2
Section 2.0 – Summary of Method	2
Section 3.0 – Definitions	3
Section 4.0 – Interferences	3-4
Section 5.0 – Safety	4
Section 6.0 – Equipment and Supplies	4-7
Section 7.0 – Reagents and Standards	7-10
Section 8.0 - Sample Preservation and Storage	10
Section 9.0 – Quality Control	10-11
Section 10.0 – Calibration and Standardization	11
Section 11.0 – Procedure	11-15
Section 12.0 – Data Analysis and Calculations	15
Section 13.0 – Method Performance	15
Section 14.0 – Pollution Prevention	15
Section 15.0 – Waste Management	15-16
Section 16.0 – References	16
Section 17.0 – Attachments as Tables, Diagrams and Flowcharts	16
Attachment 1	17

ORIGINAL MASTER COPY CONTROLLED COPY
If words above are not highlighted, this is an uncontrolled copy of this document.

Sample Preparation Procedure –733 (SPP-733=SPP-169 → SPP-940) Low Level Preparation for Analysis of Pesticides/PCBs in Soil/Sediment/Sludge by SW-846

1.0 Scope and Application

The following sample preparation procedure is designed to prepare soil/sediment/sludge samples for pesticide and Aroclor analysis by GC/ECD. The soil samples are extracted by sonication. GPC and Florisil are optional cleanup procedures.

Note: This procedure is not used for the extraction of PCBs under the Ohio VAP. PCB-only SOPs are used.

Staff members performing the procedures described in this Standard Operating Procedure (SOP) are responsible for reading, understanding, and complying with the SOP requirements. Supervisors are responsible for directing the analyst to the controlled SOP, and providing adequate explanation of the material contained therein.

This procedure is restricted to use by or under the supervision of analysts experienced in the instrumentation or preparative methods and who have demonstrated the ability to generate acceptable results through QC samples and analyst capability studies.

2.0 Summary of Method

A 30 g aliquot of sample is spiked with the surrogate solution and then mixed with sodium sulfate and extracted by sonication with a 1:1 methylene chloride:acetone solvent mixture**.** The extract is then filtered and concentrated by Kuderna-Danish (K-D) evaporative flask. Gel permeation chromatography (GPC) cleanup, Method 3640A following SOP 2.6.1, "Gel Permeation Chromatography (GPC) Cleanup of Soil and Water Extracts for GC/ECD Analysis of Pesticides/PCBs by EPA CLP SOW OLM04.3" may be performed.

Florisil column cleanup, Method 3620B, is another optional cleanup procedure performed using SOP 2.6.5, "Manual Florisil Cartridge Cleanup of Water and Soil Extracts for the Analysis of Pesticide/PCB by CLP **and** SW846"

This procedure encompasses both EPA Methods 3550B and 3550C. All samples for SC DHEC must be processed under EPA 3550C. This SOP is NOT for use with Ohio VAP projects. Please see Ohio VAP specific SOP.

3.0 Definitions

3.1 Method detection limit (MDL) – The minimum concentration of an analyte that can be measured and reported with 99% confidence that the analyte concentration is greater than zero and is determined from analysis of a sample in a given matrix containing the analyte (40 CFR, Part 136, Appendix B.)

3.2 A Sample Delivery Group (SDG) is defined by the following, whichever is more frequent:

- each 20 field samples received within a case, or
- each 7 calendar day period during which field samples in a case are received (14 calendar days if requested by the client) beginning with the receipt of the first sample.

NOTE: The DOD-QSM and SC DHEC do not accept the SDG approach, unless the samples are prepared in a single batch. When a group of up to 20 field samples of a similar matrix are prepared as one batch, method-specified QC samples such as a method blank, laboratory control sample, matrix spike, matrix spike duplicate, and matrix duplicate must also be prepared together.

3.5 SC DHEC – South Carolina Department of Health and Environmental Control

3.6 DOD-QSM – Department of Defense Quality Systems Manual

4.0 Interferences

4.1 Method interferences might be caused by contaminants in solvents, reagents, glassware, and other sample processing hardware. These contaminants lead to discrete artifacts or to elevated baselines in gas chromatography (GC). Routinely, all of these materials must be demonstrated to be free from interferences under the conditions of the analysis by running reagent blanks prepared with each batch.

4.2 Interferences caused by phthalate esters can pose a major problem in pesticide analysis. Common flexible plastics contain varying amounts of phthalates which are easily extracted during laboratory operations, so cross-contamination of glassware frequently occurs when plastics are handled. Interferences from phthalates can best be minimized by avoiding the use of such plastics in the laboratory.

4.3 Matrix interferences may be caused by contaminants that are co-extracted from the sample. The extent of matrix interferences will vary considerably from source to source, depending on the nature of the site being sampled. The cleanup procedures must be used to remove such interferences in order to achieve specific method detection limits.

5.0 Safety

5.1 Appropriate protective equipment and clothing must be used under the assumption that all samples are potentially hazardous. During sample preparation, safety glasses, gloves and lab coats are a minimum requirement. The persistent presence of noxious odors may be indicative of failure of the laboratory ventilation system and must be reported to a supervisor or manager.

5.2 Laboratory staff must review the Chemical Hygiene Plan for general safety policies, and Material Safety Data Sheets (MSDS) for solvents and reagents used in the laboratory. The Chemical Hygiene Plan and the MSDS are located in the Quality Assurance department.

6.0 Equipment and Supplies

6.1 Sonic cell disruptor - Heat Systems, Ultrasonics, Inc., Model W-385 (475-watt with pulsing capability, No. 207 3/4-inch tapped disrupter horn), or equivalent device with a minimum 375-watt output capability.

Note: In order to ensure that sufficient energy is transferred to the sample during extraction, the horn must be replaced if the tip begins to erode. Erosion of the tip is evident if it has a rough surface.

6.2 Sonabox (or equivalent) for use with disrupter to decrease cavitation sound

6.3 Teflon® beakers – 250 **mL**

6.4 Filtration apparatus:

6.4.1 Buchner funnel

6.4.2 Filter paper – Whatman No. 41, 7-cm diameter

6.4.3 Filtration flask – 500 **mL**

6.5 Kuderna-Danish (K-D) apparatus

6.5.1 Concentrator tube – 10 mL, graduated (Kontes K-570040-1029, or equivalent)

6.5.2 Evaporative flask - 500 mL (Kontes K-470001-0500, or equivalent)

6.5.3 Snyder column - three-ball macro (Kontes K-503000-0121, or equivalent)

6.6 Silicon carbide boiling chips - approximately 10 to 40 mesh.

6.6.1 Heat the chips to 400 ^{o}C for 30 minutes prior to use. If know heated boiling chips are available, rinse new boiling chips with methylene chloride before use.

6.7 Water bath - heated, with concentric ring cover, capable of temperature control (± 5 °C).

NOTE: Always use the water bath in a hood.

6.8 Top-loading balance - capable of weighing accurately to ± 0.01 g

6.9 Nitrogen evaporation device equipped with a heated bath that can be maintained at 35 °C to 40 °C, N-Evap by Organomation Associates, Inc., South Berlin, MA, or equivalent

6.10 Vials and caps - 2 mL for GC autosampler

6.11 GPC cleanup device

6.11.1 GPC cleanup device - GPC Autoprep Model 1002 A or B (Analytical Biochemical Laboratories, Inc., or equivalent)

6.11.2 Chromatographic column - 700 mm X 25 mm I.D glass column. Flow is upward.

6.11.2.1 To simplify switching from the UV detector during calibration to the GPC collection device during extract cleanup, an optional double three-way valve (Rheodyne Type 50 Teflon Rotary Valve #10-262 or equivalent) may be attached. This allows the column exit flow to be shunted either to the UV flow-through cell or to the GPC collection device.

ORIGINAL MASTER COPY CONTROLLED COPY
If words above are not highlighted, this is an uncontrolled copy of this document.

6.11.3 Guard column - (Optional) 5 cm, with appropriate fittings to connect to the inlet side of the GPC analytical column (Supelco 5-8319 or equivalent).

6.11.4 Bio Beads (SX-3) - 200-400 mesh, 70 g (Bio-Rad Laboratories, Richmond, CA, catalog 152-2750 or equivalent).

6.11.4.1 An additional 5 g of Bio Beads is required if the optional guard column is employed.

6.11.4.2 The quality of the Bio Beads may vary from lot to lot because of excessive fines in some lots. In addition to fines having a detrimental effect on chromatography, they also can pass through the column screens and damage the 24-position wafer valve.

6.11.4.3 An alternative column would be a pre-packed high pressure stainless steel column.

6.11.5 Ultraviolet detector - fixed wavelength (254 nm) with semi-prep flow-through cell.

6.11.6 Strip-chart recorder, recording integrator, or laboratory data system.

6.11.7 Syringe - 10 mL with Luerlock fitting, Hamilton gas-tight syringe or equivalent.

6.11.8 Syringe filter assembly - disposable, (Gelman Sciences Acrodisc CR PTFE, Product No. 4219, 25-mm, 0.45-µm syringe filters, or equivalent).

6.11.8.1 Rinse each syringe filter with a minimum of 25 **mL** of methylene chloride prior to use.

6.12 Bottle or test tube - 20 mL with Teflon-lined screw-cap for sulfur removal, if needed

6.13 Glass vials - minimum of 20 mL, with screw-cap and Teflon or aluminum foil liner

6.14 Spatulas - disposable wooden tongue-depressors

6.15 Pipets - volumetric 1.0 **mL** or 2.0 **mL** (optional)

ORIGINAL MASTER COPY CONTROLLED COPY
If words above are not highlighted, this is an uncontrolled copy of this document.

6.16 Syringes - 1.0 **mL** or 2.0 **mL** (optional)

6.17 Vials - 10 **mL**, with screw top and Teflon®-faced seal

6.18 Tubes - centrifuge, 20- to 15 **mL**

6.19 Centrifuge - table top (IEC model Centra-8)

6.20 Vortex mixer - Genie, Model 550-6, Scientific Industrial, Inc., Bohemia, NY, or equivalent.

6.21 Disposable Pasteur glass pipets, 1 **mL**

7.0 Reagents and Standards

Note: All spiking standard information is entered into the LIMS. To obtain information on any standard, access Element, click on "Laboratory," and scroll down and access "Standards." Standards can be sorted by Department. Select the standard you would like to access. The view will show lot number, prepared dates, solvent, vendor, composition, and concentration.

All standards are prepared in the Organic Standards Laboratory. Standards are stored separately from samples at 2-6 ^{o}C in the laboratory when not in use.

7.1 Reagent Water – All water used in this procedure must be equivalent to ASTM Type II water (as it relates to specific conductance and specific resistance) which is demonstrated to meet the blank contamination acceptance criteria contained in the applicable analytical SOP. It is referred to throughout the remainder of this SOP as reagent water.

7.2 Sodium sulfate – Mallinckrodt granular, anhydrous reagent grade, or equivalent

7.2.1 Heat to 400 °C for 4 hours, cool, and store in a glass bottle prior to use.

CAUTION: An open container of sodium sulfate may become contaminated during storage in the laboratory.

7.3 Solvents - pesticide quality or equivalent. Each lot of solvent is tested to demonstrate that it is free of interferences before use.

7.3.1 Methylene chloride

7.3.1.1 Methylene chloride must be certified as acid-free.

7.3.2 Hexane

7.3.3 Acetone

7.4 Surrogate Stock Solution

7.4.1 Restek SOM01.1 Pesticide Surrogate Standard solution (Catalog # 32453) containing 2,4,5,6-Tetrachloro-m-xylene (TCX) at 100 µg/mL and Decachlorobiphenyl (DCB) at 200 µg/mL in acetone.

7.5 Surrogate solution #**449**

7.4.1 Prepare the surrogate solution by adding 1.2 **mL** of Restek SOM01.1 Pesticide Surrogate Standard to acetone in a 200 **mL** volumetric flask and dilute to volume with acetone. The resulting surrogate solution contains TCX at 0.6 µg/mL and DCB at 1.2 µg/mL. Prepare this solution every six months.

7.6 Pesticide Stock Spiking Solutions

7.6.1 NSI Custom Pesticide Mix #1 (Custom# Q-4302) containing the following compounds in a 1:1 hexane/toluene solution at 20 µg/mL:

Aldrin	alpha-BHC
beta-BHC	Delta-BHC
gamma-BHC (Lindane)	alpha-Chlordane
Gamma-Chlordane	Endosulfan I
Heptachlor	Heptachlor epoxide (isomer B)
Isodrin	

7.6.2 NSI Custom Pesticide Mix #2 (Custom# Q-4303) containing the following compounds in a 1:1 hexane/toluene solution at 50 µg/mL:

4, 4’-DDT	4, 4’-DDD
4, 4’-DDE	Dieldrin
Endosulfan II	Endosulfan sulfate
Endrin	Endrin aldehyde

ORIGINAL MASTER COPY CONTROLLED COPY
If words above are not highlighted, this is an uncontrolled copy of this document.

Endrin ketone	Methoxychlor

7.6.3 Pesticide Matrix Spiking Solution #4030

7.6.3.1 Prepare the Pesticide Matrix Spiking Solution #4030 by adding 0.75 **mL** of NSI Custom Pesticide Mix #1 and NSI Custom Pesticide Mix #2 to methanol in a 100 **mL** volumetric flask and dilute to volume with methanol. The resulting concentrations are 0.15 µg/mL for the compounds in section 7.6.1 and 0.375 µg/mL for the compounds in **Section** 7.6.2. Prepare this solution every six months.

7.6.4 A matrix spike solution containing Technical Chlordane or Toxaphene is available to clients that request that these compounds be spiked into matrix spikes and laboratory samples. Technical Chlordane and Toxaphene are spiked separately.

7.6.5 Custom NSI TCLP Pesticide Spike (Custom #Q-4740) is used as the spiking solution for Toxaphene. This solution contains Toxaphene at 10 µg/mL. The expiration date for this solution is provided by the manufacturer.

7.6.6 Stock Technical Chlordane Standard – Restek Technical Chlordane Standard (Catalog # 32072) at 5000 µg/mL in isooctane.

7.6.6.1 Prepare the Technical Chlordane spiking solution by adding 10 µL of Restek Technical Chlordane Standard to acetone in a 50 **mL** volumetric flask and dilute to volume with acetone. Prepare this solution every six months.

7.7 PCB Stock Spiking Solution

7.7.1 Restek Aroclor® 1016/1260 Mix (Catalog # 32039) containing both Aroclors at 1000 **µg**/mL.

7.7.1.1 PCB Spiking Solution #4615

7.7.1.1.1 Prepare the PCB spiking solution #4615 by adding 0.25 **mL** of Restek Aroclor® 1016/1260 Mix to a 50 **mL** methanol in a volumetric flask and dilute to volume with methanol. The resulting spiking solution contains Aroclor 1016/1260 at 5.0 **µg**/mL in methanol. Prepare this solution every six months.

8.0 Sample Preservation and Storage

8.1 Samples are preserved and stored according to the tables in Sample Control SOP 4.1, "Receiving Samples" and 4.6, "Storing Samples." Sample holding times are also listed.

8.2 Samples must be extracted within 14 days of collection.

8.3 Samples are obtained from the Custodian out of cold storage. They should be allowed to come to room temperature prior to sample preparation. After preparation, they are returned to the Custodian and placed in the cooler at 2-6 ^{o}C for long-term storage and disposal.

9.0 Quality Control

9.1 Method Blank

9.1.1 A method blank is prepared with each extraction batch of up to 20 samples and processed with the associated samples.

9.2 Laboratory Control Sample (LCS)

9.2.1 A laboratory control sample (matrix spike blank for NYSASP) is prepared with each extraction batch of up to 20 samples.

9.3 Matrix Spike (MS) and Matrix Spike Duplicate (MSD)

9.3.1 A MS and MSD are prepared with each extraction batch of up to 20 samples.

9.4 Duplicates

9.4.1 Duplicates, at a frequency of 5% for soil samples, are required when processing samples submitted to meet the regulatory requirements of South Carolina DHEC. The duplicate matrix spikes satisfy the duplicate requirement.

10.0 Calibration and Standardization

10.1 Ensure the balance is calibrated for the day prior to use following Quality Control SOP 13.16, "Top Loading Balance Calibration and Maintenance."

11.0 Procedure

Documentation must follow the requirements in Quality Control SOP 13.6, "Proper Documentation Procedures". The sample preparation technician must complete the proper extraction worksheet for the sample preparation procedure -733 (Attachment 1) including the manufacturer and lot number of reagents/solvents used. Any unused portion of the worksheet must be Z'd out. The laboratory supervisor or his/her designee reviews the worksheet for completeness and accuracy, and then signs the worksheet. The worksheet accompanies the sample extracts to the analytical laboratory.

11.1 Sample Preparation

11.1.1 Thoroughly mix the sample before aliquotting, especially composite samples. Discard any foreign objects such as sticks, leaves, and rocks. Also, decant and discard any standing aqueous phase.

11.2 Sonication Extraction

Note: For Method 3550C, the surrogate spike and matrix spike (for the LCS and MS/MSD) are added prior to the addition of the sodium sulfate.

11.2.1 Weigh approximately 30 **g** (± 0.1 **g**) of sample into a 250 **mL** Teflon® beaker and add 60 **g** of granular, anhydrous sodium sulfate. Record the sample weight to the nearest 0.1 g on the extraction worksheet. Stir the sample and sodium sulfate into a homogeneous sandy texture.

11.2.2 For a sample to be used for the MS and MSD, weigh out four additional 30 **g** portions of sample, two for the pesticide MS/MSD and two for the PCB MS/MSD. Record the weights to nearest 0.1 g. Add 60 **g** of sodium sulfate to each aliquot. Add 1 **mL** of the pesticide matrix spike solution #4030 to one MS/MSD pair and 1.0 **mL** PCB spiking solution #4615 to the other MS/MSD pair.

11.2.3 Prepare two LCSs by weighing two 30.0 **g** aliquots of sodium sulfate and adding 60.0 **g** more to each. Add 1 **mL** of pesticide matrix spike solution #4030 to the 1st LCS, and add 1.0 **mL** of #4615 PCB spike solution to the 2nd LCS.

11.2.4 Prepare the method blank by weighing of 90.0 **g** of sodium sulfate spiked with the 0.5 **mL** of the surrogate solution #449. It is carried through the entire analytical procedure.

11.2.5 Add 0.5 **mL** of surrogate solution #449 to all samples, the MS, MSD, LCS and blank by using a volumetric pipet or a syringe.

11.2.6 Immediately add 80 to 100 **mL** of 1:1 methylene chloride:acetone to the sample.

11.2.7 Place the bottom surface of the sonicator probe about 1/2 inch below the surface of the solvent but above the sediment layer.

11.2.8 Sonicate for three minutes using a 3/4-inch horn at 100% power output with pulse set on 1 second ON and percent duty cycle knob set at 50%. Do <u>not</u> use a microtip.

Note: These settings are specified for Model W-385. When using a sonicator other than Model W-385, refer to the instructions provided by the manufacturer for all appropriate output settings.

11.2.9 Decant and filter the extracts using Buchner funnel filtration.

11.2.10 Repeat the extraction two more times with additional 80 to 100 **mL** portions of 1:1 methylene chloride:acetone. Before each extraction, thoroughly mix the solid residue, and make certain that the sodium sulfate is free flowing and not a consolidated mass. As needed, break up large lumps with a clean spatula. Decant and filter the extraction solvent after each sonication as above. After the final sonication, pour the entire

sample into the funnel and rinse the centrifuge bottle and funnel with 20 to 30 **mL** of methylene chloride.

11.2.10.1 If particulate matter is observed, filter the entire extracted sample again by placing a new filter in the original funnel and pouring the extracted sample through the funnel. Rinse with methylene chloride.

11.2.11 Pour each extract into a K-D evaporative flask and concentrator tube assembly for concentration.

11.2.11.1 Note: For Method 3550C, the extract is required to be poured through a powder funnel inserted into the top of the KD apparatus and containing a glass wool plug and 10 g of furnaced sodium sulfate.

11.3 Extract Concentration

11.3.1 Add one or two clean boiling chips to the evaporative flask and attach a three-ball macro-Snyder column. Add about 1 **mL** of methylene chloride to the top of the Snyder column. Place the K-D apparatus on a hot water bath (80 - 85 °C) so that the concentrator tube is partially immersed in the hot water and the entire lower rounded surface of the flask is bathed with hot vapor. Adjust the vertical position of the apparatus and the water temperature as required to complete the concentration in 15 - 30 minutes. At the proper rate of distillation, the balls of the column will actively chatter, but the chambers will not flood with condensed solvent. Reduce the volume of liquid to less than 10 **mL**. Remove the K-D apparatus and allow it to drain and cool for at least 10 minutes.

CAUTION: DO NOT ALLOW THE K-D EVAPORATOR TO GO DRY.

11.3.2 If GPC is to be performed, the following procedure is to be used. If not, proceed to Section 11.4.

11.3.2.1 In order to remove most of the acetone, it is absolutely necessary to further reduce the volume of the extracts to 2.0 **mL**. This is best accomplished using the nitrogen concentration technique, but can be accomplished using the K-D flask if care is taken during the K-D concentration step. The presence of acetone will cause a dead volume to develop

in the GPC column and thus will cause loss of surrogates and analytes during GPC cleanups.

Note: This step has not proven to be critical, thus it may be eliminated unless surrogate recoveries indicate otherwise.

11.3.2.2 Adjust the extract volume to 10.0 **mL** with methylene chloride. Proceed with GPC cleanup (see SOP 2.6.1).

11.3.2.3 Aliquot 4.0 **mL** of extract, dilute to 10 **mL** with methylene chloride and proceed with the GPC process.

11.3.2.4 After GPC cleanup, set up a K-D flask with a 10 **mL** concentrator tube attached. Pour the methylene chloride extract after GPC cleanup into the K-D. Rinse the extract container with methylene chloride to complete the transfer. Place the three-ball macro Snyder column on the K-D apparatus, add 1 to 2 **mL** of methylene chloride to the top of the Snyder, and place the apparatus on the hot water bath. Concentrate the extract to approximately 4 **mL**. Remove the K-D apparatus and allow it to cool. Proceed to the solvent exchange into hexane.

11.4 Solvent Exchange into Hexane and Final Concentration

11.4.1 Momentarily remove the Snyder column, add 60 **mL** of hexane and a new boiling chip, and reattach the Snyder column. Pre-wet the column by adding about 1 **mL** of hexane to the top. Concentrate the solvent extract as before. When the apparent volume of liquid reaches 3 to 5 **mL**, remove the K-D apparatus and allow it to drain and cool for at least 10 minutes. Alternatively, micro-Snyder concentration may be used.

CAUTION: DO NOT ALLOW THE K-D EVAPORATOR TO GO DRY.

11.4.2 Concentrate the GPC extract in hexane to a 1.0 **mL** final volume using the N-EVAP technique. If GPC was not performed concentrate the extract to 5.0 **mL**.

11.4.3 Label all extracts with the following information:

CompuChem number	XXXXXX
Procedure Code	-733
Date Extracted	XX/XX/XX

Complete all extraction worksheet and deliver it with the extracts to the designated area in the GC instrument laboratory.

12.0 Data Analysis and Calculations

N/A

13.0 Method Performance

This method was validated through in-house laboratory studies of method detection limits and precision and accuracy for single analyst. The data are retained in electronic form on intranet QA server and in hardcopy form in the QA department or in the data storage room.

14.0 Pollution Prevention

The solvents used in this procedure pose little threat to the environment when recycled and managed properly. Pollution prevention encompasses any technique that reduces or eliminates the quantity or toxicity of waste at the point of generation. Numerous opportunities for pollution prevention exist in laboratory operation. The EPA has established a preferred hierarchy of environmental management techniques that places pollution prevention as the management option of first choice. Whenever feasible, laboratory personnel should use pollution prevention techniques to address their waste generation. When wastes cannot be feasibly reduced at the source, the Agency recommends recycling as the next best thing. See SOP 12.1, "Hazardous Waste Disposal", regarding laboratory procedures for recycling solvent waste streams.

15.0 Waste Management

It is the laboratory's responsibility to comply with all federal, state, and local regulations governing waste management, particularly the hazardous waste identification rules and land disposal restrictions, and to protect the air, water, and land by minimizing and controlling all releases from fume hoods and bench operations. Compliance with all sewage discharge permits and regulations is also required.

Samples preserved with HCl, HNO_3, or H_2SO_4 are hazardous and must be handled as hazardous waste.

16.0 References

16.1 "Test Methods for Evaluating Solid Wastes: Physical/Chemical Methods", SW846, 3rd Edition, Update III, 12/96, Method 3550B; Update IV, Method 3550C**, 02/07**

16.2 Standard Methods for the Examination of Water and Wastewater, 20th (1998) Edition, Method 1080

16.4 NELAC Standards, effective July 2003, plus revisions

16.5 EPA QA-G6: Guidance for Preparing Standard Operating Procedures (SOPs) EPA/600/B-07/001, April 2007.

16.6 CompuChem Quality Manual, Revision **13**, **November 17, 2009, plus revisions**

16.7 Sample Control SOP 4.1, "Receiving Samples" & Sample Control SOP 4.6, "Storing Samples"

16.8 Quality Control SOP 13.16, "Top Loading Balance Calibration and Maintenance."

16.9 Department of Defense Quality Systems Manual for Environmental Laboratories, **Version 4.1, 4/22/2009**

17.0 Attachments as Tables, Diagrams and Flowcharts

17.1 Attachment 1 – Extraction Worksheet

Attachment 1

CompuChem

ASSIGNED TO _____ EXTRACTION WORKSHEET DATE/TIME EXTRACTED: _____

PEST/PCB IN S/S/S BY METHOD 3550B/C for 8081/8082

EMPLOYEE ID # _____ -733 BATCH NO.: _____

	COMPUCHEM NUMBER	CLIENT SAMPLE ID	QC SAMPLE TYPE	SAMPLE WEIGHT (g)	FINAL VOLUME (ml)	COMMENTS
1						
2						
3						
4						
5						
6						GPC (3640A) PERFORMED? Y / N
7						FLORISIL PERFORMED? Y / N
8						
9						
10						
11						
12						
13						
14						
15						
16						
17						
18						
19						
20						
21						
22						
23						
24						
25						
26						Add 1.0 ml of 4615 to PCBLCS & PCB SS

		#	AMOUNT	LOT #	SURROGATE AND SPIKE ADDED BY:
	SURROGATE	449	0.5 ml		_____ _____
	SPIKE	4030	1.0 ml		INITIALS DATE
	PCB SPIKE	4615	1.0 ml		

FINAL VOLUME VERIFIED: _____

REVIEWED BY: _____

Analysts initials. Extract _____ KD _____ N2 _____ Bottle up _____

Balance: _____

Witness _____ / _____
Initials Date

Manufacturers and lot numbers of reagents/solvents used _____

Rev. 4/1/10:jad

CompuChem
A Division Of
Liberty Analytical Corp.

501 Madison Avenue
Cary, NC 27513

NELAP accredited

SOP DOCUMENTATION FORM

This form must accompany all new and revised Standard Operating Procedures (SOPs) when you turn them in to Quality Assurance for review. Please fill out the entire block below (except effective date).

This is a new procedure _____ revised procedure ✓ outdated procedure (archive) _____

- Procedure Code: IP-192 SOP Section #: 2.2.4.10 Revision #: 8

SOP Title: GC/ECD Analysis of Organochlorine Pesticides in Water and Soil Extracts by SW-846 Method 8081A and Method 8081B

Effective date: (QA fills in) 03-15-2010

- Procedure prepared by: Rebecca K Mead Date: 03-08-2010
- Procedure approved by: (If the manager prepared the SOP, a qualified second party should sign) [signature] Date: 03-09-2010
- Reason for change: Annual Review; revised PEM check frequency
- This procedure meets the requirements of the following approved method references: SW-846; 3rd Edition, Update III, 12/96, Method 8081A & Update IV Method 8081B, 2/07;

Procedure approved by a QA Representative (unless QA Representative signed above):

_____ Date: _____

On an annual basis: Lab managers are required to review lab practices and revise the SOP if necessary. If no revision is necessary, indicate by your signature that the SOP has been reviewed.

Annual Review—Signature: _____ Date: _____

Annual Review—Signature: _____ Date: _____

Annual Review—Signature: _____ Date: _____

Annual Review—Signature: _____ Date: _____

Instrument Procedure 192: GC/ECD Analysis of Organochlorine Pesticides in Water and Soil Extracts by SW-846 Method 8081A and Method 8081B

Table of Contents

SECTION	PAGE NO.
Section 1.0 – Scope and Application	2
Section 2.0 – Summary of Method	2-3
Section 3.0 – Definitions	3-**5**
Section 4.0 – Interferences	**5**
Section 5.0 – Safety	**6**
Section 6.0 – Equipment and Supplies	**6**
Section 7.0 – Reagents and Standards	**7-11**
Section 8.0 - Sample Preservation and Storage	**11**
Section 9.0 – Quality Control	**11-17**
Section 10.0 – Calibration and Standardization	**17-20**
Section 11.0 – Procedure	**20-24**
Section 12.0 – Data Analysis and Calculations	**24-29**
Section 13.0 – Method Performance	**29**
Section 14.0 – Pollution Prevention	**29**
Section 15.0 – Waste Management	**29-30**
Section 16.0 – References	**30**
Section 17.0 – Attachments as Tables, Diagrams and Flowcharts	**30-31**
Attachment 1	**32**
Attachment 2	**33**
Attachment 3	**34**
Attachment 4	**35**
Attachment 5	**36**

ORIGINAL MASTER COPY CONTROLLED COPY
If words above are not highlighted, this is an uncontrolled copy of this document.

Instrument Procedure 192: GC/ECD Analysis of Organochlorine Pesticides in Water and Soil Extracts by SW-846 Method 8081A and Method 8081B

1.0 Scope and Application

The Standard Operation Procedure describes the procedures used to determine the concentration of various organochlorine pesticides in extracts of solid and liquid sample matrices. Open-tubular, capillary columns are employed with electron capture detectors (ECD). Compound identification is based on dual column confirmation, with the second column being of a dissimilar nature. See **Attachment** 1 for a list of the analytes determined using this SOP and their reporting limits.

Staff members performing the procedures described in this SOP are responsible for reading, understanding, and complying with the SOP requirements. Supervisors are responsible for directing the analyst to the controlled SOP, and providing adequate explanation of the material contained therein.

This procedure is restricted to use by or under the supervision of analysts experienced in the instrumentation or preparative methods and who have demonstrated the ability to generate acceptable results through QC samples and analyst capability studies.

This procedure encompasses both EPA 8081A and EPA 8081B. All samples for SC DHEC must be analyzed by EPA 8081B. This SOP is NOT for use with Ohio VAP projects. Please see Ohio VAP specific SOP.

2.0 Summary of Method

2.1 A measured volume of sample (1 L for liquids, 2 to 30 grams for solids) is extracted using a separatory funnel for water and either an automated Soxhlet or Ultrasonic Extraction method, for soils. A variety of cleanup steps may be used, including Gel Permeation Chromatography (GPC). After cleanup, the extract is analyzed by injecting 2-µL (1-µL per column) into a GC with dual wide-bore, fused silica, capillary columns with dual electron capture detectors (GC/ECD). The instrument hardware is configured to allow two analytical columns joined to a single injection port for simultaneous dual column analysis.

Samples are prepared following the procedures in Sample Preparation Procedure -069, "Sample Preparation for Pesticides/PCBs in Water by SW 846 and NYSASP" or Sample Preparation Procedure –733, "Low Level Preparation

for Analysis of Pesticides/PCBs in Soil/Sediment/Sludge by SW-846 and NYSASP."

3.0 Definitions

3.1 Method Detection Limit (MDL) - The MDL is the minimum concentration of a substance that can be measured and reported with 99% confidence that the analyte concentration is greater than zero and is determined from the analysis of a sample in a given matrix containing the analyte. A minimum of seven sample replicates is required to calculate a statistical MDL. The MDL is an approximation of the DL. Any analyte concentration result at or above the MDL must also meet all qualitative identification criteria required by the test method in order to be reported as present.

3.2 Detection Limit (DL) - The DL is the smallest analyte that can be demonstrated to be different from zero or a blank concentration at the 99 % level of confidence. The false positive rate at the DL is 1% and the false negative rate is 50%. Any analyte concentration result at or above the DL must also meet all qualitative identification criteria required by the test method in order to be reported as present.

3.3 Limit of Detection (LOD) – The LOD is the smallest concentration of an analyte that must be present in a sample in order to be detected at a 99% confidence level. The false negative rate at the LOD is 1 %. For DoD-QSM, non-detect sample results are reported as < LOD. Numeric values of measurements between the DL and the LOQ are reported as estimates. The DL < LOD ≤ LOQ.

3.4 Limit of Quantitation (LOQ) – The Limit of Quantitation is the lowest concentration of a substance that produces a quantitative result within specified limits of precision and bias. The LOQ must be within the calibration range.

3.5 Reporting Limit (RL) –

3.5.1 For Non-DoD work, the laboratory reporting limit is based on the lowest multipoint calibration standard concentration. For organic methods, values detected below the reporting limit and above the MDL may be reported and qualified as an estimated concentration.

3.5.2 The DoD-QSM defines the reporting limit as being the lowest concentration value specified by the client that meets project

requirements for reporting data with known precision and bias for a specific analyte in a specific matrix. The LOQ cannot be greater than the RL. Data reported below the RL must be flagged as estimated values if they are also less than the LOQ.

3.**6** Reporting Units – µg/L and µg/Kg

3.**7** A Sample Delivery Group (SDG) is defined by the following, whichever is more frequent:

- each 20 field samples received within a case, or
- each 7 calendar day period during which field samples in a case are received (14 calendar days if requested by the client) beginning with the receipt of the first sample.

NOTE: The DoD-QSM and South Carolina Department of Health and Environmental Control (SC DHEC) do not accept the SDG approach, unless the samples are prepared in a single extraction batch. When a group of up to 20 field samples of a similar matrix are prepared as one batch, method-specified QC samples such as a method blank, laboratory control sample, matrix spike, matrix spike duplicate, and matrix duplicate must also be prepared together. If samples are batched together from different sites, project-specific QC must be processed.

3.8 Extraction Batch – a group of to 20 field samples of a similar matrix, method-specified QC samples such as a method blank, laboratory control sample, matrix spike, matrix spike duplicate, and matrix duplicate prepared together at the same time**.**

3.9 SC DHEC – South Carolina Department of Health and Environmental Control

3.**10** DoD-QSM – Department of Defense Quality Systems Manual

3.**11** Ohio VAP – Ohio Environmental Protection Agency Voluntary Action Program

3.**12** Marginal Exceedance – Value outside the LCS control limit but within the marginal exceedance limits (4 standard deviations around the mean). This outside boundary prevents a grossly out-of-control LCS from passing. (See Attachment #4)

4.0 Interferences

4.1 Interference in this method can be grouped into three broad categories: contaminated solvents, reagents, or glassware; contaminated GC carrier gas, parts, column surfaces, detector surfaces; and the presence of co-eluting compounds in the sample matrix that also are detected by the ECD. Specific cleanups may be necessary for samples, depending on the compounds of interest.

4.2 Interferences by phthalate esters introduced during the sample preparation procedures can be a major problem **including, but not limited to: c**ommon flexible plastics found in certain gloves and other objects contain**ing** varying amounts of phthalates that may be introduced during lab operations**; and cross-**contamination of clean glassware routinely **occurring,** when plastics are handled during extraction steps, especially when solvent wetted surfaces are handled. These interferences can be minimized by cleanup of solvents, reagents, and glassware.

4.3 Glassware must be scrupulously cleaned as soon as possible after use by rinsing with the last solvent used. This should be followed by detergent washing with hot water, and rinses with tap water and organic-free reagent water. Drain the glassware and dry in an oven at 130° C for several hours or rinse with methanol and drain.

4.4 The presence of elemental sulfur will result in broad peaks that interfere with early eluting pesticides, and can be removed by cleaning the extract with TBA clean up.

4.5 Waxes, lipids, and other high molecular weight compounds are also removed using GPC.

4.6 Technical chlordane and Toxaphene are multi-component analytes. When samples contain more than one multi-component analyte, a more experienced analyst may be required to process/assess the data. Similar conditions exist when multi-component analytes have been subjected to environmental degradation.

5.0 Safety

Appropriate protective equipment and clothing must be used under the assumption that all samples are potentially hazardous. During sample preparation, safety glasses, gloves and lab coats are a minimum requirement. The persistent presence of noxious odors may be indicative of failure of the laboratory ventilation system and must be reported to a supervisor or manager.

Laboratory staff must review the Chemical Hygiene Plan for general safety policies, and Material Safety Data Sheets (MSDS) for solvents and reagents used in the laboratory. The MSDS are located in the Quality Assurance department.

6.0 Equipment and Supplies

6.1 Gas chromatograph: Agilent Technologies 6890N and Thermoquest Trace GC 2000 gas chromatographs suitable for on-column and splitless injection with all required accessories, including syringes, analytical columns, gases, ECDs, and or data system.

6.2 The following wide-bore columns or equivalent are used in the analysis:

6.2.1 Column 1 – 30 m x 0.32 mm ID fused silica capillary column bonded with 35% phenyl methylpolysiloxane (clpest), 0.50 µm film thickness.

6.2.2 Column 2 – 30 m x 0.32 mm ID fused silica capillary column chemically bonded with 50% phenyl methylpolysiloxane (clpest2), 0.42 µm film thickness.

6.2.3 Wide-bore columns are installed in a 1/4 inch injectors, with deactivated liners designed specifically for use with mega-bore columns.

6.3 Restek Y-shaped fused silica connector.

6.4 Data system: Standards and samples are processed using the EZ Chrom® Elite version 2.6.1 data acquisition system, Target® version 12.0.0.124 Quick Forms report generation software from ThruPut Systems, and Promium Element® LIMS version 6.01:4045, plus revisions.

7.0 Reagents and Standards

Details for the standard preparation are contained in the Standards Preparation Logbook (22F) or Promium Element LIMS.

All standards are prepared in the Organic Standards Laboratory. Standards are stored separately from samples at 2-6°C in the reach-in cold storage units in the preparation and organic standards laboratories when not in use. All stock standard solutions must be replaced after one year or sooner if routine QC indicates a problem. All other standard solutions must be replaced after six months or sooner if QC indicates a problem.

Note: All spiking standard information is entered into the LIMS. To obtain information on any standard, access Element, click on "Laboratory," and scroll down and access "Standards." Standards can be sorted by Department. Select the standard you would like to access. The view will show lot number, prepared dates, solvent, vendor, composition, and concentration.

Note: All reagents and standards must be ACS (American Chemical Society) grade or equivalent. All standards and reagents are subject to change in vendor and in concentration. The Reporting Limits are also subject to change, but must remain at or above the lowest point in the calibration.

7.1 Reagent water – All water used in this procedure must be equivalent to ASTM Type II water (as it relates to specific conductance and specific resistance) which is demonstrated to meet the blank contamination acceptance criteria contained in this SOP. It is referred to throughout the remainder of this SOP as reagent water.

7.2 Reagent or pesticide grade chemicals must be used for all tests.

7.3 Working Standards

7.3.1 Commercially available standards are purchased from Restek and are received with manufacturer's certificates of analysis. The certificate documentation is retained for reference purposes. Working standards are prepared from the commercial standards in the organic standards preparation lab.

Note: The concentration and composition of standards used during the sample preparation and cleanup are provided in the sample preparation SOPs. Standards must equilibrate to room temperature before use.

7.3.3 Performance Evaluation Mixture (PEM)

7.3.3.1 Prepare in hexane every six months, or sooner, if the solution has degraded or concentrated.

Compounds	Concentration (ng/mL)
4,4′-DDT	3
Endrin	3
Tetrachloro-m-xylene	20
Decachlorobiphenyl	40

7.3.4 Individual Standard Mixture C (INDC)

7.3.4.1 Prepare in hexane every six months or sooner, if the solution has degraded or concentrated.

7.3.4.2 The low calibration standard concentration corresponds to the RL, the midpoint concentration must be 4x the low point concentration and the high point concentration must be at least 16x the low point concentration. The standard is prepared every six months, or sooner if the solutions have degraded or concentrated.

INDC (ηg/mL)					
Compound	**CS1**	**CS2**	**CS3**	**CS4**	**CS5**
alpha-BHC	5.0	10	20	40	80
Heptachlor	5.0	10	20	40	80
gamma-BHC	5.0	10	20	40	80
Endosulfan I	5.0	10	20	40	80
Dieldrin	10	20	40	80	160
Endrin	10	20	40	80	160
4,4'-DDD	10	20	40	80	160
4,4'-DDT	10	20	40	80	160
Methoxychlor	50	100	200	400	800
beta-BHC	5.0	10	20	40	80
delta-BHC	5.0	10	20	40	80
Aldrin	5.0	10	20	40	80
Heptachlor Epoxide (exo-epoxy isomer)	5.0	10	20	40	80
alpha-Chlordane	5.0	10	20	40	80
gamma-Chlordane	5.0	10	20	40	80
4,4'-DDE	10	20	40	80	160
Endosulfan Sulfate	10	20	40	80	160
Endrin Aldehyde	10	20	40	80	160
Endrin ketone	10	20	40	80	160
Endosulfan II	10	20	40	80	160
Tetrachloro-m-xylene	5.0	10	20	40	80
Decachlorobiphenyl	10	20	40	80	160

NOTE: Only the exo-epoxy isomer (isomer B) of Heptachlor Epoxide is used as an analytical standard.

INDC – Individual Standard Mixture C
CS – Calibration Standard

7.3.5 Toxaphene and Technical Chlordane

Multicomponent Analytes (ng/mL)

Analyte	Std. I.D.	Low	Med1	Med2	Med3	High
Toxaphene	4411-4415	500	1000	2000	4000	8000
Tech. Chlordane	4416-4420	160	200	400	800	1600
Tetrachloro-m-xylene		5	10	20	40	80
Decachlorobi-phenyl		10	20	40	80	160

7.3.6 Separate calibration standards are used for Toxaphene and Technical chlordane (if required). Alpha and gamma chlordane are included in the single component standard solutions.

7.4 A standard prepared from a source separate from that used to prepare the calibration standard is analyzed after each initial calibration for verification. This standard is referred to as the initial calibration verification (ICV) standard.

7.4.1 **An ICV must be analyzed for every target compound within a five-point calibration curve.**

7.5 Surrogate standards are added to all samples, method blanks, matrix spikes, laboratory control samples, and calibration standards.

7.5.1 Decachlorobiphenyl (DCB) at 1.2 µg/mL and Tetrachloro-m-xylene (TCX) at 0.6 µg/mL are the surrogates used. Corrective action is taken when both surrogates are recovered outside of acceptance criteria on both columns.

7.5.2 For surrogate standard preparation details, refer to Sample Preparation Procedure -069, "Sample Preparation for Pesticides/PCBs in Water by SW-846 and NYSASP".

7.6 All standard solutions are stored separately from samples at 2-6 ^{o} C in Teflon®-sealed containers in the dark. All stock standard solutions must be replaced after one year or sooner if routine QC indicates a problem. All other standard solutions must be replaced after six months or sooner if QC indicates a problem.

8.0 Sample Preservation and Storage

8.1 Samples are preserved and stored according to the tables in Sample Control SOP 4.1, "Receiving Samples" and 4.6, "Storing Samples." Sample holding times are also listed.

8.2 All extracts must be analyzed within 40 days of extraction.

8.3 All sample extracts are stored in the refrigerator in the laboratory at 2 - 6° C prior to analysis. After analysis, extracts are returned to Sample Control for long-term storage and disposal.

9.0 Quality Control

9.1 Breakdown

9.1.1 The breakdown standard (PEM) must be analyzed initially with the calibration curve and at least every **12** hours within the analytical sequence.

9.1.2 Degradation of Endrin and DDT is indicated by the presence of 4,4'-DDE, 4,4'-DDD, Endrin aldehyde, or Endrin ketone and is caused by the injector port becoming contaminated with high boiling residue from sample injection.

9.1.2 Degradation of either Endrin or 4,4'-DDT must not exceed 15%. (See sections 12.13 and 12.14 for calculations)

9.1.2.1 If either the degradation of either Endrin or 4,4'-DDT exceed 15%, replace the liner and clean the injection port.

9.2 Surrogates

9.2.1 Statistical control limits for surrogates are shown in the following table. Surrogate recoveries must be met for all samples, blanks, laboratory control samples, matrix spikes, and matrix spike duplicates.

Surrogate	Aqueous % Recovery	Soil % Recovery
Decachlorobiphenyl	43-144	43-144
Tetrachloro-m-xylene	43-135	43-135

9.2.1.1 The surrogate control limits required by the DoD-QSM are presented in the following table:

Surrogate	Aqueous % Recovery	Soil % Recovery
Decachlorobiphenyl	30-135	55-130
Tetrachloro-m-xylene	25-140	70-125

9.2.2 If both surrogates are outside the control range on both columns, the sample must be re-extracted and re-analyzed unless interfering peaks are the reason for the failure. Carefully examine all chromatograms to make certain the out of control surrogate recoveries are not caused by interference or a partial injection before re-extracting the sample.

9.2.2.1 Partial injections should be re-injected and can be diagnosed by comparing the solvent peak of the sample to the solvent peak of the standard. They should be similar in size.

9.3 Method Blanks (MB)

9.3.1 Method blanks are prepared and analyzed with each extraction batch of up to 20 samples.

9.3.2 No target analyte may be present above the reporting limit and all surrogate criteria stated above must be met.

9.3.2.1 The DoD-QSM requires that no target analyte be present in the method blank > ½ the reporting limit.

9.3.3 If the method blank exceeds acceptance criteria, the source of the problem(s) must be investigated and appropriate corrective action taken. All samples processed with a method blank that does not meet acceptance criteria must be re-extracted and reanalyzed.

9.3.4 Analyte concentration reported for all field and quality control samples that do not meet surrogate acceptance criteria must be qualified as estimates in the SDG narrative. Refer to the DOD-QSM "J" and "Q" flags.

9.4 Laboratory Control Sample (LCS)

9.4.1 A LCS is reagent water (or furnaced Ottawa sand or sodium sulfate for solid matrices) fortified with the target analyte compounds and surrogates.

9.4.2 The LCS is prepared with each extraction batch of up to 20 samples.

9.4.3 The LCS must meet the control limits of 50 to 150% recovery for the analytes listed in Attachment 4. SC DHEC requires control limits of 70 – 130% recovery. If the client requests Toxaphene or Technical chlordane spike, the acceptance criteria are 50-150% recovery, except SC DHEC which requires 70 – 130% recovery **for all analytes**.

9.4.3.1 An LCS, analyzed in compliance with the DoD-QSM, must be spiked with all of the analytes of interest in the project. The LCS must meet the control limits presented in Attachment **4**, with the allowance that one analyte may fail within the marginal exceedance limit.

9.4.3.2 If the LCS does not meet the acceptance criteria, re-extract and reanalyze the associated samples (if sufficient sample volume is available).

9.4.3.2.1 If corrective actions fail, identify the specific analytes in the associated samples in the SDG narrative.

9.4.3.2.2 To meet the requirements of the DoD-QSM, refer to the "Q" flag.

9.4.3.3 SC DHEC does not accept the use of marginal exceedances, all target analytes must be spiked and must pass all acceptance criteria.

9.5 Matrix Spike/Matrix Spike Duplicate

9.5.1 A matrix spike and matrix spike duplicate (MS/MSD) must be performed for each batch of up to 20 samples.

9.5.2 The percent recovery must be within the control limits of 50 to 150. The % RPD of matrix spike duplicates must be ≤ 40. If the client requests Toxaphene or Technical chlordane spike, the acceptance criteria are the same.

9.5.2.1 The objective for the MS/MSD test is for the majority of the spiked compounds to meet recovery and RPD criteria. However, the recoverability of spiked analytes in environmental samples is very much influenced by the particular matrix and, therefore, these objectives may not be able to be met. When recoveries do not meet the acceptance criteria or interference preclude proper assessment of the data, results of a LCS are evaluated to verify that the analytical systems are under control.

9.5.2.2 SC DEHC requires that all target analytes be spiked.

9.5.2.3 SC DEHC requires limits of 70 – 130% recovery for all analytes.

9.5.2.4 If the original sample used for the MS/MSD test does not meet surrogate acceptance criteria, it should be reanalyzed or re-extracted/reanalyzed if the MS/MSD surrogate recoveries are within limits. If the original sample and the MS/MSD test yield the same unacceptable surrogate recoveries, then the sample does not require re-extraction/ reanalysis since matrix interferences is confirmed.

9.6 Duplicate matrix spikes analyzed in compliance with the DoD-QSM must meet the control limits presented for the LCS in Attachment 4. The RPD between the duplicate matrix spikes must be ≤ 30%.

9.6.1 If the acceptance criteria for the duplicate matrix spikes are not met, contact the client for guidance.

9.6.2 Results for the specific analytes in the original sample associated with failing matrix spike must be identified in the narrative as estimated values. Refer to the DoD-QSM "J" flag.

9.7 Instrument Maintenance and Trouble Shooting

9.7.1 When linearity is difficult to achieve, verify that the appropriate length of column is inserted in the detector. Examine all column ends and determine if the ends of the columns need to be trimmed.

9.7.2 When the instrument blanks fail, examine the chromatography to determine if there is contamination in the column that is causing the failure. If so, bake the column for 1 hour or less to see if this can be corrected. If the contamination is such that baking for 1 hour does not improve the baseline, it may be necessary to change the liner.

9.7.3 When CCV standards fail recovery low, verify that the correct peaks are being named. Also verify that the syringe is not plugged and change the septa. If the CCV standard fails again, examine the chromatography to determine if there is a problem with the baseline that is causing the failure. If so, bake the column for 1 hour or less and run 1-2 hexane blanks to see if this can be corrected. Also, if the CCV standard is failing on only one column, the y-splitter may be plugged. If the calibration verification continues to fail, the instrument will need a new calibration curve.

9.7.4 When CCV standards fail recovery high, verify that the correct peaks are being named. Examine the chromatography to determine if there is contamination on the column that is causing the failure. If so, bake the column for 1 hour or less and run solvents to see if this can be corrected. If the CCV standard fails again, the instrument will need a new calibration curve.

9.7.5 When the CCV standard fails due to drift, change the septum and verify that all the column fittings are secure. Also, determine if there is contamination on the column that is causing the failure. If so, bake the column for 1 hour or less to see if this can be corrected. If the CCV standard still fails, it is permissible to update retention times once per 24 hours period. Record in the instrument run log when the retention times are updated.

9.7.6 All preventive and routine maintenance as mentioned above is recorded in the instrument run log (Attachment 2). Major maintenance is recorded in the maintenance log (Attachment 3).

9.7.7 If the dual capillary columns used in this method are connected by press-fit Y-shaped glass splitters, the splitter should be replaced along with the insert (uniliner) when DDT and/or Endrin degradation is a problem or when CCV standards fail. Along with this, remove the first few inches of the injector port side of the column and pre-column. If this fails to correct the degradation problems, it may be necessary to deactivate the injector port or replace the columns.

9.7.8 Other corrective actions include removal of 0.5 meters of the detector end of the columns when linearity is difficult to achieve.

9.7.9 To silanize the injector when DDT and Endrin degradation is a problem, the following steps should be taken. Remove the analytical columns after cooling the GC oven. Remove the glass insert (uniliner). Lower the injector port temperature to room temperature. Remove any foreign materials observed while inspecting the injector port. Prepare a solution of deactivating agent (Sylon-CT) following the manufacturer's instructions. Place a beaker under the injector port inside the oven, and rinse the inside of the injector port with acetone and then toluene, catching the rinsate in the beaker. Coat the inside of the injector port with the solution thoroughly and allow it to dry. Finally, rinse the injector with toluene, methanol, acetone, and then hexane, in that order. Reassemble the injector and replace the columns.

9.7.10 Because of the relatively low concentration of pesticide standards injected on the GC/ECD, column adsorption may be a problem if the GC has been unused for several days. Deactivation (priming) can be achieved by injecting a standard at least 20 times more concentrated than the mid-level standard before beginning the initial calibration or continuing calibration verification. Run an instrument blank after system priming because analytes may carry over.

9.8 Contingency

9.8.**1** If due to a lab accident or to QC failures, a re-preparation and analysis are required for the sample and insufficient sample volume remains, the Project Manager must be alerted and will contact the client for direction on how to proceed.

9.8.2 If persistent contamination occurs in the laboratory, analysis must be halted until the source of the contamination can be identified and isolated. When the contamination issue is resolved, samples analysis may proceed.

9.8.3 Any other issues that potentially effect data quality should also be addressed with the Project Manager.

10.0 Calibration and Standardization – **all calibration criteria apply to both columns**

10.1 Initial Calibration – EPA 8081A and EPA 8081B

10.1.1 The initial calibration consists of a five point curve. The percent Relative Standard Deviation (% RSD) of the calibration factors for the initial calibration must be less than or equal to 20% for all analytes.

When the % RSD is ≤ 20%, the instrument response is considered to be linear and the mean calibration factor can be used for quantitation. If the % RSD is greater than 20%, the initial calibration may still be acceptable if the following conditions are met.

10.1.1.1 The mean of all of the % RSD values for the analytes is less than or equal to 20%. EPA 8081B and DoD-QSM do not allow the use of "grand mean". All target analytes must pass acceptance criteria.

10.1.1.1.1 If an analyte is part of the calibration standard, it must be included in the calculation.

10.1.1.1.2 A summary of the initial calibration data and/or a list of the analytes not meeting the 20% RSD criteria and the actual % RSD for each of these analytes must be included as a deliverable to our client.

10.1.1.**2** Least squares linear regression may be used when the RSDs exceed 20%. When this option is used, the line must not be forced through the origin. The correlation coefficient for the linear fit must be ≥ 0.990 (0.995 to meet the requirements of the **DoD**-QSM).

10.2 Initial Calibration Verification – EPA 8081A and EPA 8081B

10.2.1 The initial calibration verification (ICV) must be analyzed after each new initial **or additional** calibration **for every target compound within a five-point calibration.**

10.2.2 Acceptance criteria for the ICV is ± 20% of the true value.

10.3 Continuing Calibration – EPA 8081A

The continuing calibration verification (CCV) standards are analyzed at the beginning of a 24-hour period to establish the retention windows for the analytes and at intervals of 10 samples and at the end of the run sequence. All samples for SC DHEC must be analyzed by EPA 8081B.

10.3.1 All continuing calibration verification standards analyte calibration factors must be within ± 15% difference (% D) when compared to the response factors of the initial calibration on both analytical columns.

If the ± 15% D criterion is exceeded for any analyte, calculate the average percent difference across all analytes, including surrogates. If this average is within ± 15% D the calibration has been verified. When this occurs the following conditions must be met:

10.3.1.1 The average must include all analytes. Clients must be provided with the calibration verification data or a list of those analytes exceeding the ± 15% D limit, together with their actual Calibration Factors. The analytes failing criteria are flagged with an "R" on the quantitation report for the standard.

Note: The "grand mean" option for the CCV is not allowed by the DoD-QSM.

10.3.1.2 If the average % D exceeds ± 15%, then corrective action must be taken and the continuing calibration verification re-injected. If the calibration still exceeds the criteria, a new initial calibration must be analyzed.

10.4 Continuing Calibration – EPA 8081B

The continuing calibration verification (CCV) standards are analyzed at the beginning of a 24-hour period to establish the retention windows for

the analytes and at intervals of 10 samples and at the end of the run sequence. All samples for SC DHEC must be analyzed by EPA 8081B.

10.4.1 All continuing calibration verification standards analyte calibration factors must be within ± 20% difference (% D) when compared to the response factors of the initial calibration on both analytical columns.

Note: The "grand mean" option for the CCV is not allowed. All target analytes must pass acceptance criteria.

10.5 If a "closing" standard, which is injected after a group of samples, contains target analyte responses that are >15% D for 8081A and 20% D for 8081B different, when compared to the mean calibration factor from the initial calibration, and the analyte was not detected in that group of samples, the samples do not require re-injection. However, if the standard is more than 15% D for 8081A or 20% D for 8081B below the mean calibration factor from the initial calibration, then re-injection is required.

10.6 The continuing calibration verification standards are used to evaluate retention time stability. If any of the standards fall outside their retention time windows, the system is out of control and corrective action must be taken to correct the problem. If, after re-injection of the standard following corrective action, the retention times are still outside the windows, a new initial calibration must be analyzed. The ten samples preceding the failing continuing calibration verification must be reanalyzed.

10.7 Toxaphene

Unless specified for a particular project/program, a single calibration standard of Toxaphene is analyzed to provide pattern recognition information. The mid-point standard (level 4) is used. Additionally, a 5-point calibration can be performed for Toxaphene detected in samples.

10.8 PCBs

When Method 8082 or 8082A for PCBs is being used in conjunction with Method 8081A or 8081B, a five-point calibration has to be performed for Aroclor-1660 followed by individual mid-level standards for the remaining Aroclors. See Instrument Procedure 194, "Analysis of

Polychlorinated Biphenyls (PCBs) as Aroclors by GC/ECD-Capillary Column Technique by SW-846" for standards and concentrations.

10.8.1 When Method 8082 is employed for PCBs a verification standard of AR1660 must be analyzed during each 12 hour shift or every 10 samples, whichever occurs first. The Aroclor **standard** can be injected after the 8081A mix.

10.9 For calibration verification, all target analytes must be injected (INDC) with the exception of Toxaphene and Technical Chlordane. Analysts should alternate the use of high and low concentration mixtures of single-component and multi-component analytes. Perform the calibration verification after every 10 samples.

10.10 If Toxaphene and/or Technical Chlordane are detected in any samples, the mid-concentration level of those standards must be injected. Samples may be required to be re-injected against those mid-concentration standards.

10.11 The Endrin and DDT breakdown (PEM) standard is included **with each** calibration verification. PEM is analyzed after the INDC standard.

11.0 Procedure

Documentation must follow the requirements in Quality Control SOP 13.6, "Proper Documentation Procedures". The analyst must complete the instrument run log. (See Attachment **2**) Condition codes are used to document failed and qualified injections. (See Attachment 5)

11.1 Samples are first extracted using Sample Preparation Procedure –069, "Sample Preparation for Pesticides/PCBs in Water by SW-846 and NYSASP" or Sample Preparation Procedure –733, "Sample Preparation for Pesticides/PCBs in Soil/Sediment/Sludge by SW-846 and NYSASP."

11.2 GC Conditions

11.2.1 Dual Column Analysis

11.2.1.1 The dual column/dual detector approach involves the use of two 30 m x 0.53 mm ID fused silica open-tubular columns of different polarities, thus having different selectivities towards

the target compounds. The columns are connected to a "Y-splitter" and ECD detectors.

11.2.1.2 Column 1:

- Type: clpest
- Dimensions: 30 m x 0.32 mm ID
- Film Thickness: 0.50 µm

11.2.1.3 Column 2

- Type: clpest2
- Dimensions: 30 m x 0.32 mm ID
- Film Thickness: 0.42 µm

11.2.1.4 Carrier gas

- flow rate – 6 mL/minute, helium

11.2.1.5 Makeup gas

- flow rate – 20 mL/minute, argon/methane

11.2.1.6 Temperatures

- Temperature program – 150° C (0.5 minute hold) to 275° C (10 minute hold) at 7 degrees/minute
- Injector temperature – 200° C
- Detector temperature – 300° C

11.2.1.7 Injection volume – 4 µL (2 µL per column)

11.2.1.8 Solvent – Hexane

11.2.1.9 Detector – Dual ECD's

11.2.1.10 Range – 10

11.3 GC analysis

11.3.1 The GC is set up according to the conditions above. An initial oven temperature at or below 150° C is required to resolve the BHC's. A final temperature of 240 - 275° C is necessary to elute Decachlorobiphenyl.

11.3.2 The initial calibration is performed according to the conditions discussed above and criteria must be met for both columns.

11.3.3 The calibration is verified, with an independent second source ICV standard after each multipoint.

11.3.4 Calibration verification standards are also injected after every 10 samples and at the end of the analytical sequence. Since an analytical sequence may continue as long as instrumental QC criteria are met, the end of one 12-hour sequence is considered to be the beginning of the next 12-hour sequence.

11.3.5 Each sample analysis must be bracketed with acceptable initial or continuing calibration verification standards.

11.4 Retention time windows

11.4.1 Retention time windows are established for each analyte. The width of the retention time windows should be based on actual retention times of standards, assessed over 72 hours. The windows are defined as ± three times the standard deviation of the absolute retention times of each standard. Analyst experience is critical in the interpretations of chromatograms.

11.4.2 Absolute retention time windows are established for each analyte, including five component peaks for multi-component analytes. For each analyte, the absolute retention time from each standard injected at the beginning of a 24-hour period is used as the midpoint of the window ± three times the standard deviation as determined from above.

11.5 Analyte Identification

11.5.1 Tentative identification of an analyte occurs when a peak from a sample extract falls within the estimated retention time window on both analytical columns. The higher concentration of the two columns is reported provided there is no interference from overlapping peaks.

11.5.1.1 To meet the requirements of the DoD-QSM, document results that are not confirmed on both columns in the SDG narrative. Refer to the "Q" **flag (indicates one or more QC criteria have not been met)**.

11.5.2 Identification of multi-component analytes is based on the characteristic pattern and retention times of the indicator peaks.

11.6 Analyte quantitation

11.6.1 The external calibration procedure is used and establishes mean calibration factors for each analyte from the initial calibration. Peaks falling within an analyte's retention time window are used to calculate the quantity present. The concentration reported is the higher of the two values obtained from the dual column analysis. If one result is > 40% different, verify that there are not overlapping peaks causing this to occur. Also examine the baseline to verify that the baseline parameters are set properly. Flag the data with a "P" and document results in the narrative. Refer to the "J" flag for results reported in compliance with the DoD-QSM.

11.6.2 If the response of an analyte exceeds the on column amount of the high level standard, dilute and re-analyze. This can be done by comparing a component peak area to the corresponding analyte in the high level standard. Within the HP Target data system the "A" flag is used on the quantitation report to indicate that an analyte is outside the upper initial calibration range.

11.6.3 Quantitation of multi-component analytes

11.6.3.1 Toxaphene and technical chlordane are quantitated using response factors of five major peaks (minimum of three required) of the sample pattern compared to the response factors of five peaks in the standard.

11.6.3.2 Quantitation is based on the area under the characteristic Toxaphene and Technical Chlordane peaks as compared to the area under the corresponding calibration peaks at the same retention times using the external calibration method.

11.6.3.3 Quantify Aroclors analyzed together with pesticides using the approach stated in sections 11.6.3.1 and 11.6.3.2.

11.6.4 A normal initial calibration sequence only contains a mid-concentration level of Toxaphene and Technical Chlordane. On a project-specific basis, five levels of Technical Chlordane and Toxaphene may be required.

12.0 Data Analysis and Calculations

Calculations must be consistent with the Quality Control SOP 13.4, "Numerical Data Reduction".

12.1 Calculation of the mean or average of a set of values:

$$\overline{X} = \frac{\sum_{i=1}^{n} X_i}{n}$$

where: n = total number of values
x_i = each individual value used to calculate the mean
x = the mean of n

12.2 Calculation of the standard deviation of a set of values:

$$\text{Standard deviation} = \sqrt{\frac{\sum_{i=1}^{n}\left(X_n - \overline{X}\right)^2}{n-1}}$$

12.3 Calculation of percent recovery:

12.3.1 LCS and surrogates:

$$\%R = \frac{Amount\ found}{Amount\ spiked}\ x\ 100$$

12.3.2 Matrix spikes:

$$\%\ R = \frac{Amount\ in\ spiked\ sample - Amount\ in\ unspiked\ (native)\ sample}{Amount\ spiked}\ x\ 100$$

12.4 Calculation of % RSD

$$\%RSD = \left(\frac{Standard\ deviation}{\overline{X}}\right) \times 100$$

12.5 Calculation of RPD

$$RPD = \frac{|Value\ 1\ -\ Value\ 2|}{(Value\ 1\ +\ Value\ 2)/2}\ x100$$

12.6 Calculation of %Difference (%D)

$$\%Diff = \frac{Value\ -\ \overline{Reference\ \ value}}{\overline{Reference\ \ value}}\ x\ 100$$

12.7 Calibration factors for GC analysis are calculated by dividing the total peak area for each chosen compound in the standard by the total mass injected (in nanograms).

$$Calibration\ Factor\ (CF) = \frac{Peak\ area}{Total\ mass\ injected}$$

12.8 Linear Calibration using Least Squares Regression

General linear equation: $y = ax + b$

where: y = Instrument response (peak area)
a = Slope of the line (coefficient of x)
x = Mass of the analyte in the calibration standard aliquot injected
b = y-intercept

Linear Regression by Least Squares:

$$y_1^{'} = ax_i + b$$

Where: b = intercept
x_i = Mass of the analyte in the ith calibration standard aliquot injected
$y_1^{'}$ = calculated response for the ith calibration standard

The sum of the squares of the differences is minimized to obtain a and b:

$$\sum_{i=1}^{N}(y_i - y_1^{'})^2$$

12.9 Correlation Coefficient r:

$$r = \frac{N\left[\sum_{i=1}^{N}(x_i y_i)\right] - \left[\sum_{i=1}^{N}(x_i)\right]\left[\sum_{i=1}^{N}(y_i)\right]}{\sqrt{N\left[\sum_{i=1}^{N}(x_i^2)\right] - \left[\sum_{i=1}^{N}(x_i)\right]^2} - \sqrt{N\left[\sum_{i=1}^{N}(y_i^2)\right] - \left[\sum_{i=1}^{N}(y_i)\right]^2}}$$

Where: r = Correlation Coefficient
N = number of data points (equals 5 in a 5 point curve)
y = response
i = index variable (first data point i = 1)
x = Mass of the analyte in the calibration standard aliquot injected

12.10 Calculation of % Difference (% D)

$$\%Diff = \frac{Value - \overline{Reference\ \ value}}{\overline{Reference\ \ value}} \times 100$$

12.11 Calibration factors for GC analysis are calculated by dividing the total peak area for each chosen component in the standard by the total mass injected (in nanograms).

$$Calibration\ Factor\ (CF) = \frac{Peak\ area}{Total\ mass\ injected}$$

12.12 Concentration

12.12.1 Concentration of aqueous samples for GC analysis

$$\mu g / L = \frac{(Ax)(Vt)(Df)}{(\overline{CF})(Vi)(Vs)}$$

where: Ax = area response for the analyte
Vt = volume of the concentrated extract (µl)
Df = dilution factor. If no dilution, Df = 1.0
$\overline{CF}$ = mean calibration factor from the initial calibration
Vo = volume of water sample extracted (mL)
Vi = volume of extract injected (µl)

12.12.2 Concentration of soil samples <u>(dry weight basis)</u> for GC analysis

$$\mu g / kg = \frac{(Ax)(Vt)(Df)}{(\overline{CF})(Vi)(Ws)(D)}$$

where: Ws = weight of sample extracted, in grams
D (dry weight)= $\frac{100 - \%\ moisture}{100}$
Ax, Vt, Df, $\overline{CF}$, Vi have the same definitions as for water.

12.12.3 Concentration of aqueous samples for GC analysis using linear regression:

$$ug/L = \frac{(a(Ax)+b)(Vt)(Df)}{(Vi)(Vo)}$$

where: Ax = area response for the analyte
Vt = volume of the concentrated extract (µl)
Df = dilution factor. If no dilution, Df = 1.0
a = slope
b = y-intercept
Vo = volume of water sample extracted (ml)
Vi = volume of extract injected (µl)

12.12.4 Concentration of soil samples for GC analysis using linear regression:

$$ug/kg = \frac{(a(Ax)+b)(Vt)(Df)}{(Vi)(Ws)(D)}$$

where: Ws = weight of sample extracted, in grams
D (dry weight)= 100 - % moisture100
Ax = area response for the analyte
Vt = volume of the concentrated extract (µl)
Df = dilution factor. If no dilution, Df = 1.0
a = slope
b = y-intercept
Vo = volume of water sample extracted (ml)
Vi = volume of extract injected (µl)

12.13 Endrin Breakdown:

$$\%\text{ breakdown of Endrin} = \frac{\text{sum of degradation peak areas (Endrin aldehyde + Endrin ketone)}}{\text{sum of all peak areas (Endrin + Endrin aldehyde + Endrin ketone)}} \times 100$$

12.14 DDT Breakdown:

$$\%\text{ breakdown of DDT } = \frac{\text{sum of degradation peak areas (DDD + DDE)}}{\text{sum of all peak areas (DDT + DDD + DDE)}} \times 100$$

12.15 Calculating Dilutions

If a sample concentration exceeds the high level standard a dilution must be performed. Determine a level of dilution that will result in a value within the upper half of the calibration range. This is an acceptable dilution. A 10x dilution is performed using 1-mL sample plus 9-mL diluent for a total volume of 10-mL. It should be recorded on the run log as "10x ."

13.0 Method Performance

This method was validated through in-house laboratory studies of method detection limits and precision and accuracy for single analyst. The data are retained by the QA department.

14.0 Pollution Prevention

The solvents used in this procedure pose little threat to the environment when recycled and managed properly. Pollution prevention encompasses any technique that reduces or eliminates the quantity or toxicity of waste at the point of generation. Numerous opportunities for pollution prevention exist in laboratory operation. The EPA has established a preferred hierarchy of environmental management techniques that places pollution prevention as the management option of first choice. Whenever feasible, laboratory personnel should use pollution prevention techniques to address their waste generation. When wastes cannot be feasibly reduced at the source, the Agency recommends recycling as the next best thing. See SOP 12.1, "Hazardous Waste Disposal", regarding laboratory procedures for recycling solvent waste streams.

15.0 Waste Management

It is the laboratory's responsibility to comply with all federal, state, and local regulations governing waste management, particularly the hazardous waste identification rules and land disposal restrictions, and to protect the air, water, and land by minimizing and

controlling all releases from fume hoods and bench operations. Compliance with all sewage discharge permits and regulations is also required.

Samples preserved with HCl, HNO_3, or H_2SO_4 are hazardous and must be handled as hazardous waste.

16.0 References

16.1 "Test Methods for Evaluating Solid Wastes: Physical/Chemical Methods", SW-846, 3rd Edition, Update III, 12/96, Method 8081A

16.2 Standard Methods for the Examination of Water and Wastewater, 20th Edition (1998), Method 1080

16.3 Code of Federal Register, 40 CFR, Part 136, "Guidelines for Establishing Test Procedures for Priority Pollutants"

16.4 Quality Control SOP 13.6, "Proper Documentation Procedures"

16.5 Quality Control SOP 13.4, "Numerical Data Reduction"

16.6 NELAC Standards, effective July 2003**, plus revisions**

16.7 EPA QA-G6: Guidance for the Preparing Standard Operating Procedures (SOPs) EPA/600/B-07/001, April 2007.

16.8 CompuChem Quality Manual, Revision **13**, **November 17, 2009**, plus revisions

16.9 Sample Control SOP 4.6, "Storing Samples"

16.10 Department of Defense Quality Systems Manual for Environmental Laboratories, Version **4.1**, **4/22/09**

16.11 "Test Methods for Evaluating Solid Wastes: Physical/Chemical Methods", SW-846, 3rd Edition, Update IV, Method 8081B, February 2007

17.0 Attachments as Tables, Diagrams and Flowcharts

17.1 Attachment 1 – Analyte List and Reporting Limits

17.2 Attachment 2 – **Example of a** GC Extractables Run Log

17.3 Attachment 3 – **Example of a** GC Extractables Instrument Maintenance Log

17.4 Attachment 4 – LCS Control Limits Required by the DoD-QSM and Marginal Exceedences

17.5 Attachment 5 – Condition Codes

Attachment 1

		Reporting Limits	
Compound Name	**CAS Registry No.**	**µg/L**	**µg/Kg**
Aldrin	309-00-2	0.025	0.83
alpha-BHC	319-84-6	0.025	0.83
beta-BHC	319-85-7	0.025	0.83
delta-BHC	319-86-8	0.025	0.83
gamma-BHC (Lindane)	58-89-9	0.025	0.83
alpha-Chlordane	5103-71-9	0.025	0.83
gamma-Chlordane	5103-74-2	0.025	0.83
4,4'-DDD	72-54-8	0.050	1.67
4,4'-DDE	72-55-9	0.050	1.67
4,4'-DDT	50-29-3	0.050	1.67
Dieldrin	60-57-1	0.050	1.67
Endosulfan I	959-98-8	0.025	0.83
Endosulfan II	33213-65-9	0.050	1.67
Endosulfan sulfate	1031-07-8	0.050	1.67
Endrin	72-20-8	0.050	1.67
Endrin aldehyde	7421-93-4	0.050	1.67
Endrin ketone	53494-70-5	0.050	1.67
Heptachlor	76-44-8	0.025	0.83
Heptachlor epoxide	1024-57-3	0.025	0.83
Isodrin	465-73-6	0.025	0.83
Methoxychlor	72-43-5	0.250	16.7
Technical chlordane	12789-03-06	0.8	26.7
Toxaphene	8001-35-2	2.5	83.3

ORIGINAL MASTER COPY CONTROLLED COPY
If words above are not highlighted, this is an uncontrolled copy of this document.

Attachment 2

COMPUCHEM a Division of Liberty Analytical Corporation Instrument ID 86/87 File Path: _____ DATE ___/___/___

GC EXTRACTABLES RUN LOG

LOGBOOK 4N(5) 17 Method: 8081A 8081B 8082 8082A 8151A OLM04.3 OLC03.2 SOM01.2 Other _____ Amt. Inj. 2 µL (1 µL per column)

☐Changed septum ☐Changed liner ☐Baked column ☐Trimmed column

	REJECTED	FILE NUMBER	REPORTED	DATE	COMPUCHEM #	CASE/SDG#	STANDARD ID	CHEMIST	COMMENTS
1				/ /					
2				/ /					
3				/ /					
4				/ /					
5				/ /					
6				/ /					
7				/ /					
8				/ /					
9				/ /					
10				/ /					
11				/ /					
12				/ /					
13				/ /					
14				/ /					
15				/ /					
16				/ /					
17				/ /					
18				/ /					
19				/ /					
20				/ /					

The presence of the Chemist's/Analyst's employee ID number, or signature, on this run log attests that strict compliance with the method's SOP has occurred. Any SOP deviations require documentation by the responsible chemist/analyst together with the chemist's/analyst's initials and the initials of the lab supervisor and a QA department representative, signifying approval of the deviation.

Calibration ID: _____ Sequence ID: _____ Hexane Lot No_____

REVIEWED BY: _____ DATE _____

03/17/09: jr

Attachment 3

CompuChem a division of Liberty Analytical Corp. Logbook 4 K(4) 1

GC Extractables Instrument Maintenance Log: 80/81

Date: _____ Time: _____

System: _____

Problem: _____

_____

_____

_____

_____

Action Taken: _____

_____

_____

_____

_____

_____

Parts used:

Part Number	Description	Quantity

File Name Indicating Instrument In Control: _____

Performed By: _____ Date: _____

Reviewed By: _____ Date: _____

2/11/00:mlj

Attachment 4

DoD-QSM Aqueous and Solid LCS Control Limits and Marginal Exceedance Limits

Analyte	Aqueous % Recovery	Aqueous Marginal Exceedance	Solid % Recovery	Solid Marginal Exceedance
4,4'-DDD	25-150	10-170	30-135	10-155
4,4'-DDE	35-140	15-160	70-125	60-135
4,4'-DDT	45-140	30-155	45-140	30-155
Aldrin	25-140	10-155	45-140	30-155
α-BHC	60-130	50-140	60-125	50-135
α-Chlordane	65-125	55-135	65-120	55-130
β-BHC	65-125	55-135	60-125	50-135
δ-BHC	45-135	30-150	55-130	45-145
Dieldrin	60-130	50-140	65-125	55-135
Endosulfan I	50-110	40-120	15-135	10-155
Endosulfan II	30-130	10-150	35-140	20-160
Endosulfan sulfate	55-135	40-150	60-135	50-145
Endrin	55-135	45-145	60-135	50-145
Endrin aldehyde	55-135	40-150	35-145	20-165
Endrin ketone	75-125	70-135	65-135	55-145
γ-BHC	25-135	10-155	60-125	50-135
γ-Chlordane	60-125	50-135	65-125	55-135
Heptachlor	40-130	30-145	50-140	35-155
Heptachlor Epoxide	60-130	50-140	65-130	55-140
Methoxychlor	55-150	40-165	55-145	45-155

ORIGINAL MASTER COPY CONTROLLED COPY
If words above are not highlighted, this is an uncontrolled copy of this document.

Attachment 5

Code	Explaination
CS	Carry over Suspected from prior analysis
CT	Contamination verified
DI	Requires Dilution
DW	Diluition Wrong
JS	Reinjection same as prior run
LA	Lab Accident (explain in comments)
OT	Other (explain in coments)
OW	Original wrong for QC sample
RP	Reportable prior run
RT	Retention time shift
RU	Repeated Unnecessarily
SF	Spike recoveries failed (high or low)
SI	Spiked inadvertently
SH	Surrogate recoveries high
SL	Surrogate recoveries low
SM	Surrogate or spike missing
IF	Instrument failure
US	Unacceptable Standard (explain in comments)
VR	Verify results
NM	Did not match prior run or duplicate
RN	Reanalyze neat, was run at a dilution
PC	Poor chromatography
SC	Sulfur clean up required
WS	Wrong standard (SOM PCBs)
MI	Misinjection (bad injection)

Code	Explaination
%R	%RSD failed (Ical)
%B	Breakdown failed
%D	%D (CCV)
RT	Retention time shift
RU	Repeated Unnecessarily
IF	Instrument failure
US	Unacceptable Standard (explain in comments)
PC	Poor chromatography
SC	Sulfur clean up required
LA	Lab Accident (explain in comments)
OT	Other (explain in coments)

ORIGINAL MASTER COPY CONTROLLED COPY
If words above are not highlighted, this is an uncontrolled copy of this document.

CompuChem
A Division Of
Liberty Analytical Corp.

501 Madison Avenue
Cary, NC 27513

NELAP accredited

SOP DOCUMENTATION FORM

This form must accompany all new and revised Standard Operating Procedures (SOPs) when you turn them in to Quality Assurance for review. Please fill out the entire block below (except effective date).

This is a new procedure _____ revised procedure ✓ outdated procedure (archive) _____

- Procedure Code: SPP -1049 SOP Section #: 2.2.5.1 Revision #: 10

SOP Title: PCBs in Water Preparation Procedure (SW-846)

Effective date: (QA fills in) 04-05-2010

- Procedure prepared by: Bob Meeker Date: 03-31-2010
- Procedure approved by: (If the manager prepared the SOP, a qualified second party should sign) Date: 04-02-2010
- Reason for change: Address comments from SC DHEC SOP review plus changes from internal review
- This procedure meets the requirements of the following approved method references: SW-846, 3rd Edition, Update III, method 3510C and Method 3520C, 12/96

Procedure approved by a QA Representative (unless QA Representative signed above):

_____ Date: _____

On an annual basis: Lab managers are required to review lab practices and revise the SOP if necessary. If no revision is necessary, indicate by your signature that the SOP has been reviewed.

Annual Review—Signature: _____ Date: _____

Annual Review—Signature: _____ Date: _____

Annual Review—Signature: _____ Date: _____

Annual Review—Signature: _____ Date: _____

Sample Preparation Procedure -1049: PCBs in Water Preparation Procedure: (SW-846**)**

Table of Contents

SECTION	PAGE NO.
Section 1.0 – Scope and Application	2
Section 2.0 – Summary of Method	2
Section 3.0 – Definitions	2-3
Section 4.0 – Interferences	3
Section 5.0 – Safety	4
Section 6.0 – Equipment and Supplies	4-6
Section 7.0 – Reagents & Standards	6-7
Section 8.0 - Sample Collection, Preservation, & Storage	7
Section 9.0 – Quality Control	7-8
Section 10.0 – Calibration & Standardization	8
Section 11.0 – Procedure	8-11
Section 12.0 – Data Analysis & Calculations	11
Section 13.0 – Method Performance	12
Section 14.0 – Pollution Prevention	12
Section 15.0 – Waste Management	12
Section 16.0 – References	12-13
Section 17.0 – Attachments as Tables, Diagrams, Flowcharts & Validation Data	13
Attachment 1	14

ORIGINAL MASTER COPY CONTROLLED COPY
If words above are not highlighted, this is an uncontrolled copy of this document.

Sample Preparation Procedure -1049: PCBs in Water Preparation Procedure: (SW-846**)**

1.0 Scope and Application

The following sample preparation procedure is designed to prepare water samples for Aroclor analysis by GC/ECD. The water samples may be extracted by separatory funnel or continuous liquid/liquid extraction.

Staff members performing the procedures described in this SOP are responsible for reading, understanding, and complying with the SOP requirements. Supervisors are responsible for directing the analyst to the controlled SOP, and providing adequate explanation of the material contained therein.

This procedure is restricted to use by or under the supervision of analysts experienced in the instrumentation or preparative methods and who have demonstrated the ability to generate acceptable results through QC samples and analyst capability studies.

2.0 Summary of Sample Preparation Methods

A 1 liter (**L**) volume of sample is spiked with the surrogate solution and is extracted with methylene chloride by using a separatory funnel or a continuous extractor. The methylene chloride extract is dried and concentrated. For SW-846 requirements, clean-up techniques are optional and include florisil cleanup, Method 3620B, and sulfuric acid cleanup, Method 3665A.

3.0 Definitions

3.1 Method detection limit (MDL) – The minimum concentration of an analyte that can be measured and reported with 99% confidence that the analyte concentration is greater than zero and is determined from analysis of a sample in a given matrix containing the analyte (40 CFR, Part 136, Appendix B.)

3.2 Reporting Limit – The laboratory reporting limit is based on the lowest multipoint calibration standard concentration. For organic methods, values detected below the reporting limit and above the MDL may be reported and qualified as an estimated concentration.

3.3 Reporting Units – µg/L

3.4 A **Sample Delivery Group (**SDG**)** is defined by the following, whichever is more frequent:

- Each 20 field samples received within a case, or

- Each 7 calendar day period (14 calendar days if requested by the client) during which field samples in a case are received (period beginning with the receipt of the first sample in the SDG)

NOTE: The DoD and SC DHEC do not accept the SDG approach, unless the samples are prepared in a single batch. When a group of up to 20 field samples of a similar matrix are prepared as one batch, method-specified QC samples such as a method blank, laboratory control sample, matrix spike, and matrix spike duplicate must also be prepared together at a rate of 5% for DoD and 10% for SC DHEC. If samples are batched together from different sites, project-specific QC must be processed.

3.5 SC DHEC – South Carolina Department of Health and Environmental Control

3.6 DoD-QSM – Department of Defense-Quality Systems Manual

4.0 Interferences

4.1 Method interferences might be caused by contaminants in solvents, reagents, glassware, and other sample processing hardware. These contaminants lead to discrete artifacts or to elevated baselines in gas chromatograms. Routinely, all of these materials must be demonstrated to be free from interferences under the conditions of the analysis by running reagent blanks. Interferences caused by phthalate esters can pose a major problem in pesticide analysis. Common flexible plastics contain varying amounts of phthalates, which are easily extracted during laboratory operations, so cross-contamination of glassware frequently occurs when plastics are handled. Interferences from phthalates can best be minimized by avoiding the use of such plastics in the laboratory.

4.2 Matrix interferences might be caused by contaminants that are co-extracted from the sample. The extent of matrix interferences will vary considerably from source to source, depending on the nature of the site being sampled. Cleanup procedures must be used to remove such interferences in order to achieve contract required quantitation limits (CRQL) or practical quantitation limits (PQLs).

5.0 Safety

5.1 Wear the proper personal safety equipment (lab coat, gloves, safety glasses) when performing this procedure.

Laboratory staff is encouraged to review the Chemical Hygiene Plan for general safety policies, and Material Safety Data Sheets for reagents used in the laboratory.

6.0 Equipment and Supplies

6.1 Continuous liquid-liquid extractors with Teflon or glass connecting lines for use with methylene chloride

6.2 Separatory funnel--2000 **mL** with Teflon stopcock

6.3 K-D apparatus

6.3.1 Concentrator tube--10 **mL**, graduated (Kontes K-570050-1025, or equivalent)

6.3.2 Evaporative flask--500 **mL** (Kontes K-470001-0500, or equivalent)

6.3.3 Snyder column--three-ball macro (Kontes K-503000-0121, or equivalent)

6.4 Funnels and Filter Paper

6.4.1 Powder funnels--10 cm diameter (optional), for filtration/drying

6.4.2 Buchner funnels--9 cm diameter, for filtration (optional)

6.4.3 Filter paper--No. 41 Whatman (or equivalent), 9 cm circles (optional)

6.5 Silicon carbide boiling chips--Approximately 10 to 40 mesh. Heat the chips to 400 °C for 30 min or solvent rinse before use.

6.6 Water bath--heated, with concentric ring cover, capable of ± 5 °C temperature control

NOTE: Always use the water bath in a hood.

ORIGINAL MASTER COPY CONTROLLED COPY
If words above are not highlighted, this is an uncontrolled copy of this document.

6.7 Nitrogen evaporation device, equipped with a heated bath that can be maintained at 35 – 40 °C--N-Evap by Organomation Associates, Inc., South Berlin, MA (or equivalent)

6.8 Vials and caps--2 **mL** for GC autosampler

6.9 Pyrex glass wool--heated in a 400 °C oven for 4 hr, then stored in a glass container. Prepped with methylene chloride prior to use

6.10 Drying column--chromatographic column approximately 400 mm long x 19 mm ID, with coarse frit. (Substitution of a small pad of disposable Pyrex glass wool for the frit will help prevent cross-contamination of sample extracts.)

6.11 Glass vials--minimum of 20 **mL**, with screw-cap and Teflon or aluminum foil liner

6.12 Spatula--stainless steel or Teflon

6.13 pH paper--wide range, (Hydrion Papers, Microessential Laboratory, Brooklyn, NY, or equivalent)

6.14 Pipet--volumetric 1.0 **mL** or 2.0 **mL** (optional)

6.15 Syringe--1.0 **mL** or 2.0 **mL** (optional)

6.16 Vials--10 **mL**, with screw-cap and Teflon liner (optional)

6.17 Tube--centrifuge, 12- to 15 **mL** with 19 mm ground glass joint (optional)

6.18 Snyder Column--macro, two- or three-ball with a 24/40 ground glass joint

6.19 Centrifuge--table top (optional)

6.20 Vortex mixer--Genie, Model 550-6, Scientific Industrial, Inc., Bohemia, NY, or equivalent

6.21 pH meter with a combination glass electrode

6.22 Magnetic stirrer motor--Model PC353, Corning Co., Corning, NY, or equivalent

6.23 Magnetic stir bar--Teflon-coated, at least 4 cm long

6.24 Graduated cylinder--1 L capacity

ORIGINAL MASTER COPY CONTROLLED COPY
If words above are not highlighted, this is an uncontrolled copy of this document.

6.25 Glas-Col 2-l shaker for shaking of separatory funnels

6.26 Disposable glass culture tubes--16 x 100 mm

7.0 Reagents and Standards

Note**:** All spiking standard information is entered into the LIMS. To obtain information on any standard, access Element, click on "Laboratory," and scroll down and access "Standards." Standards can be sorted by Department. Select the standard you would like to access. The view will show lot number, prepared dates, solvent, vendor, composition, and concentration.

All standards are prepared in the Organic Standards Laboratory. Standards are stored separately from samples at 2 - 6 ^{o}C in the laboratory when not in use.

7.1 Reagent water – All water used in this procedure must be equivalent to ASTM Type II water (as it relates to specific conductance and specific resistance) which is demonstrated to meet the blank contamination acceptance criteria contained in this Standard Operating Procedure (SOP).

7.2 Sodium sulfate--granular, anhydrous reagent grade, heated at 400 °C for 4 hr, or at 120 °C for 16 hr, cooled in a desiccator, and stored in a glass bottle

7.3 Methylene chloride, hexane, acetone, and methanol (optional)--pesticide quality or equivalent. It is recommended that each lot of solvent used be analyzed by GC/ECD to demonstrate that it is free of interference before use. Methylene chloride must be certified as acid free or must be tested to demonstrate that it is free of hydrochloric acid. Acidic methylene chloride must be passed through basic alumina and then demonstrated to be free of hydrochloric acid.

7.4 Sodium hydroxide solution (10 N)--Carefully dissolve 40 g of sodium hydroxide in reagent water and dilute the solution to 100 mL.

7.5 Concentrated sulfuric acid--18 N

7.6 Surrogate solution #449--the surrogates, tetrachloro-m-xylene (TCX) and decachlorobiphenyl (DCB), are added to all standards, samples, MS, MSD, LCS, and blanks. Prepare a surrogate spiking solution of 0.6 **µ**g/mL of TCX and 1.2 **µ**g/mL Of DCB.

CAUTION: Analysts must allow all spiking solutions to equilibrate to room temperature before use.

7.7 Pesticide matrix spiking solution #4615--Prepare a spiking solution in acetone or methanol that contains the **Aroclor-1016/Aroclor-1260 mixture (Aroclor 1660)** at the concentration specified:

Aroclor	µg/mL
1660	5.0

8.0 Sample Collection, Preservation, & Storage

8.1 Samples are collected, preserved, and stored according to the tables in Sample Control SOP 4.1, "Receiving Samples" and 4.6, "Storing Samples." Sample holding times are also listed.

8.2 Samples are obtained from the Custodian out of cold storage at 2.0 – 6.0 °C. They should be allowed to come to room temperature prior to sample preparation. After preparation, they are returned to the Custodian and placed in the cooler.

8.3 Samples are collected and preserved in the field according to the tables in Sample Control SOP 4.1.

8.4 Extraction of water samples by separatory funnel must be completed within 7 days of collection in order to meet method holding time. Extraction of water samples by continuous liquid – liquid extraction must be started within 7 days of collection.

9.0 Quality Control

9.1 Method Blank

9.1.1 A method blank is prepared with every analytical batch of up to 20 samples.

9.2 Laboratory Control Samples

9.2.1 Prepare a method blank and a laboratory control sample (LCS; blank spike, BS) with each extraction batch of up to 20 samples. For NYSASP, the LCS is called a matrix spike blank.

9.3 Matrix Spike/Matrix Spike Duplicate

9.3.1 A matrix spike and matrix spike duplicate (MS/MSD) are prepared for each batch of up to 20 samples.

9.4 Contingency

9.4.1 If due to a lab accident or to QC failure a re-preparation is required for the sample and insufficient volume remains, the Project Manager is alerted and will contact the client for direction on how to proceed.

9.4.2 If persistent contamination occurs in the laboratory, analyses is halted until the source can be identified and isolated. When the contamination issue is resolved, sample analyses may proceed.

9.4.3 Any other issues that potentially affect data quality are addressed with the Project Manager.

10.0 Calibration & Standardization

10.1 Sample Preparation Procedure –940, "GPC Cleanup of Soil or Water Extracts before GC/ECD Analysis for Pesticides/PCBs." contains details for the calibration of the GPC units.

11.0 Procedure

Water samples may be extracted by either a separatory funnel procedure or a continuous liquid-liquid extraction procedure. If an emulsion prevents acceptable solvent recovery with the separatory funnel procedure, continuous liquid-liquid extraction must be employed.

The Extraction Worksheet (Attachment **1**) is completed by the technician performing the sample extraction. The worksheet accompanies the samples to the GC laboratory. Include on the worksheet, the manufacturer and lot number of the reagent/solvent used.

11.1 Separatory Funnel Extraction

11.1.1 Rinse all glassware to be used for extraction with methylene chloride before use. Thoroughly mix sample before aliquotting. Measure out each 1-l sample aliquot in a separate graduated cylinder. Measure and record the pH of the sample with wide range pH paper and adjust the pH to between 5 and 9 with 10 N sodium hydroxide or concentrated sulfuric acid, if required. Samples requiring pH adjustment must be noted in the comment section of the Extraction Worksheet (Attachment **1**). Place the sample into a 2-L separatory funnel.

11.1.2 For each sample selected for MS and MSD analyses, measure out two additional 1000 **mL** portions and transfer those portions into separate funnels. Adjust the pH of each, if required, and fortify each with 1.0 mL of #4615 PCB spike solution. Also add 0.5 mL of #449 surrogate solution to sample spikes (SS). For LCSs, use 1000 mL reagent water and add 0.5 mL #449 surrogate and 1.0 mL of #4615 PCB spike solution. The final volume for MSs and LCSs is 5.0 mL.

11.1.3 Using a syringe or a volumetric pipet, add 0.5 mL of #449 surrogate solution to all water samples and blanks.

11.1.4 Prepare a method blank and an LCS with each group of water samples extracted. For PCB analyses, a method blank for water samples consists of a 1-L volume of reagent water (see section **7.1**), spiked with the surrogates and carried through the entire analytical procedure.

11.1.5 Add 60 mL of methylene chloride to the separatory funnel and extract the sample by shaking the funnel for two minutes. Vent the separatory funnels until all pressure has been released from them prior to shaking. Allow the organic layer to separate from the water phase for at least 10 minutes. If the emulsion interface between the layers is more than one-third the volume of the solvent layer, the analyst must employ mechanical techniques to complete the phase separation. The optimum technique depends upon the sample, and may include stirring, filtration of the emulsion through glass wool, centrifugation, or other physical means. Drain the methylene chloride into a 250 **mL** Erlenmeyer flask.

11.1.6 Add a second 60 **mL** volume of methylene chloride to the sample bottle and repeat the extraction procedure a second time, combining the extracts in the Erlenmeyer flask. Perform a third extraction in the same manner.

11.2 Continuous Liquid-Liquid Extraction (if needed for samples that cannot be extracted using separatory funnels)

11.2.1 Add approximately 300 mL of methylene chloride to the bottom of the Corning One-Step extractor body.

11.2.2 Measure out each 1 L sample aliquot in a separate graduated cylinder. Measure and record the pH of the sample with wide range pH paper and adjust the pH to between 5 and 9 with 10 N sodium hydroxide or concentrated sulfuric acid, if required. Samples requiring pH adjustment

must be noted in the comment section of the Extraction Worksheet (Attachment **1**). Pour the sample into the continuous extractor.

11.2.3 With some samples it may be necessary to place a layer of glass wool between the methylene chloride and the water layers in the extractor to prevent precipitation of suspended solids into the methylene chloride during extraction.

11.2.4 For each sample selected for MS and MSD analyses, measure out two additional 1000 mL portions and transfer those portions into separate continuous extractors. Adjust the pH of each, if required, and fortify each with 1.0 mL of PCB spike solution #4615 before continuing the extraction. For all LCSs use 1000 mL of reagent water. Add 1.0 mL of spike solution #4615 to all LCSs.

11.2.5 Using a syringe or a volumetric pipet, add 0.5 mL of the surrogate solution #**449** to all water samples and blanks. Add 0.5 mL of surrogate solution to all MS/MSDs and 0.5 mL surrogate solution to all LCSs.

11.2.6 Adjust the level of methylene chloride in the extractor so that the crossover-arm is half filled with solvent.

11.2.7 Connect the extractor body to a round bottom flask containing approximately 300 mL of CH_2Cl_2, boiling chips, and a condenser. Turn on the chiller and the heating mantles. A drying adaptor may be placed between the extractor body and round bottom flask. Extract for 18 hours.

11.2.8 Prepare a method blank and LCS with each group of water samples extracted. For Aroclor analysis, a method blank for water samples consists of a 1 L volume of reagent water (see section **7.1**), spiked with the surrogates and carried through the entire analytical procedure.

11.3 Extract Drying and Concentration

11.3.1 Assemble a K-D concentrator by attaching a 10 **mL** concentrator tube to a 500 **mL** evaporative flask.

11.3.2 Pour the extract through a drying column containing about 10 cm of anhydrous granular sodium sulfate, or a powder funnel containing a plug of glasswool and approximately 10-20 g of sodium sulfate. Collect the extract in the K-D concentrator. Rinse the Erlenmeyer flask and the

ORIGINAL MASTER COPY CONTROLLED COPY
If words above are not highlighted, this is an uncontrolled copy of this document.

column with at least two additional 10- to 20 mL portions of methylene chloride to complete the quantitative transfer.

11.3.3 Add one or two clean boiling chips to the evaporative flask and attach a three-ball Snyder column. Pre-wet the Snyder column by adding about 1 mL of methylene chloride to the top of the column. Place the K-D apparatus on a hot water bath (80-90 °C) so that the concentrator tube is partially immersed in the hot water and the entire lower rounded surface of the flask is bathed with hot vapor. Adjust the vertical position of the apparatus and the water temperature as required to complete the concentration in 15-30 minutes. At the proper rate of distillation, the balls of the column will actively chatter, but the chambers will not flood with condensed solvent. When the apparent volume of liquid reaches 3-5 mL, remove the K-D apparatus. Allow it to drain and cool for at least 10 min. DO NOT ALLOW THE K-D EVAPORATOR TO GO DRY.

11.4 Solvent Exchange into Hexane

11.4.1 Momentarily remove the Snyder column, add 60 mL of hexane and a new boiling chip, and reattach the Snyder column. Pre-wet the column by adding about 1 mL of hexane to the top. Concentrate the solvent extract as before. When the apparent volume of liquid reaches 3-5 mL, remove the K-D apparatus and allow it to drain and cool for at least 10 minutes. DO NOT ALLOW THE K-D EVAPORATOR TO GO DRY. Alternatively, hexane may be added to the top of the Snyder column without allowing the K-D apparatus to cool.

11.4.2 Remove the K-D and Snyder column, then concentrate the volume of the hexane extract to 5.0 mL using nitrogen blowdown or microsnyder concentration. Refer to Sample Preparation Procedure –938A, "Manual Florisil Cartridge Cleanup for Pesticide/PCB Analysis by CLP, SW-846" for details on the required Florisil cartridge cleanup or Sample Preparation Procedure –945, "Sulfuric Acid Wash of PCB-only Hexane Extracts" for sulfuric acid cleanup, if needed.

12.0 Data Analysis & Calculations

12.1 Calculations must be consistent with the QC SOP **13.4**: **"**Numerical Data Reduction**"**.

13.0 Method Performance

13.1 This method was validated through in-house laboratory studies of method detection limits and precision and accuracy for a single analyst. The data are retained by the QA department.

14.0 Pollution Prevention

14.1 The solvents used in this procedure pose little threat to the environment when recycled and managed properly. Pollution prevention encompasses any technique that reduces or eliminates the quantity or toxicity of waste at the point of generation. Numerous opportunities for pollution prevention exist in laboratory operation. The EPA has established a preferred hierarchy of environmental management techniques that places pollution prevention as the management option of first choice. Whenever feasible, laboratory personnel should use pollution prevention techniques to address their waste generation. When wastes cannot be feasibly reduced at the source, the Agency recommends recycling as the next best thing.

15.0 Waste Management

It is the laboratory's responsibility to comply with all federal, state, and local regulations governing waste management, particularly the hazardous waste identification rules and land disposal restrictions, and to protect the air, water, and land by minimizing and controlling all releases from fume hoods and bench operations. Compliance with all sewage discharge permits and regulations is also required.

Samples preserved with HCl or H_2SO_4 to pH <2 are hazardous and must be neutralized before being disposed, or must be handled as hazardous waste.

Refer to the Hazardous Waste Management and Safety SOPs located in the lab.

16.0 References

16.1 Test Methods for Evaluating Solid Waste: Physical/Chemical Methods, SW-846, 3rd Edition, **Update** III, 12/96, Methods 3510C and 3520C

16.2 Standard Methods for the Examination of Water and Wastewater, 20th (1998) Edition, Method 1080

16.**3** QC SOP **13.4**: Proper Documentation Procedures

16.**4** QC S-OP **13.6**: Numerical Data Reduction

16.**5** "Less is Better: Laboratory Chemical Management for Waste Reduction," American Chemical Society Department of Government Relations and Science Policy, 1155 16th Street, N.W., Washington DC, 20036, (202) 872-4477.

16.6 Hazardous Waste Management & Safety SOPs: "Hazardous Waste Disposal" and "Spill Control & Cleanup."

16.7 NELAC Standards, effective 2003, plus revisions

16.**8** QA-G6: Guidance for the Preparation of Standard Operating Procedures for Quality-Related Operations EPA/600/R-96/027, November 1995.

16.**9** CompuChem Quality Manual, **Revision 13**, **November 17, 2009**

19.10 Sample Preparation Procedure –940, "GPC Cleanup of Soil or Water Extracts before GC/ECD Analysis for Pesticide Compounds."

16.11 Instrument Procedure 194, "Polychlorinated Biphenyls (PCBs) as Aroclors by GC/ECD – Capillary Column Techniques – Method 8082 (SW-846)."

16.12 Sample Preparation Procedure –938A, "Manual Florisil Cartridge Cleanup for Pesticide/PCB Analysis by CLP, SW-846"

16.13 Sample Preparation Procedure –945, "Sulfuric Acid Wash of PCB-only Hexane Extracts"

16.**14** Sample Control SOP 4.1, "Receiving Samples" and **SOP** 4.6, "Storing Samples"

16.15 Department of Defense Quality Systems Manual for Environmental Laboratories, Version 4.1, 4/22/2009

17.0 Attachments as Tables, Diagrams, Flowcharts & Validation Data

17.1 Attachment 1 - Extraction Worksheet

Attachment 1

COMPUCHEM
EXTRACTION WORKSHEET
PCB Only 3510C and 3520C for 8082

ASSIGNED TO: _____ DATE/TIME EXTRACTED: _____

EMP ID NUMBER: _____ -1049 BATCH NO.: _____

	COMPUCHEM NUMBER	SAMPLE CLIENT ID	QC SAMPLE TYPE	SAMPLE VOLUME (ml)	INITIAL pH	Adjusted pH (Y/N)	Final Volume (ml)	COMMENTS
1								Florisil (3620B) performed Y / N
2								Acid Wash (3665A) performed Y / N
3								
4								
5								
6								
7								
8								
9								
10								
11								
12								
13								
14								
15								
16								
17								
18								
19								
20								
21								
22								
23								
24								
25								
26								

			Pest/PCB	SURROGATE & SPIKE ADDED BY:
	SURROGATE	NO.	449	
		AMT.	0.5 ml	_____ / _____
		LOT		INITIALS DATE
	PCB SPIKE SOLUTION	NO.	4615	
		AMT.	1.0 ml	Witness _____ / _____
		LOT		Initials Date

FINAL VOLUME VERIFIED: _____

SUPERVISOR REVIEWED: _____

Analyst initials. Extracted _____ KD _____ N2 _____ Bottle up _____

Manufacturer and lot number of reagents/solvents used_____

Rev. 12/29/09:RM

CompuChem
A Division Of
Liberty Analytical Corp.

501 Madison Avenue
Cary, NC 27513

NELAP accredited

SOP DOCUMENTATION FORM

This form must accompany all new and revised Standard Operating Procedures (SOPs) when you turn them in to Quality Assurance for review. Please fill out the entire block below (except effective date).

This is a new procedure _____ revised procedure ✓ outdated procedure (archive) _____

- Procedure Code: IP194 SOP Section #: 2.2.5.3 Revision #: 9

SOP Title: GC/ECD Analysis of Polychlorinated Biphenyls (PCBs) as Aroclors in Water & Soil Extracts by SW-846 Method 8082 & Method 8082A

Effective date: (QA fills in) 3/15/2010

- Procedure prepared by: Rebecca K Mead Date: 3/12/10
- Procedure approved by: (If the manager prepared the SOP, a qualified second party should sign) [signature] Date: 3/15/10
- Reason for change: In response to an external audit.
- This procedure meets the requirements of the following approved method references:
  SW-846 3rd Edition, Update III 12/96, method 8082
  SW-846 3rd Edition, Update IV, 2/07 Method 8082A

Procedure approved by a QA Representative (unless QA Representative signed above):

_____ Date: _____

On an annual basis: Lab managers are required to review lab practices and revise the SOP if necessary. If no revision is necessary, indicate by your signature that the SOP has been reviewed.

Annual Review—Signature: _____ Date: _____

Annual Review—Signature: _____ Date: _____

Annual Review—Signature: _____ Date: _____

Annual Review—Signature: _____ Date: _____

Instrument Procedure 194: GC/ECD Analysis of Polychlorinated Biphenyls (PCBs) as Aroclors in Water and Soil Extracts by SW-846 Method 8082 and Method 8082A

Table of Contents

SECTION	PAGE NO.
Section 1.0 – Scope and Application	2-3
Section 2.0 – Summary of Method	3
Section 3.0 – Definitions	3-**5**
Section 4.0 – Interferences	5-**6**
Section 5.0 – Safety	**6**
Section 6.0 – Equipment and Supplies	6
Section 7.0 – Reagents and Standards	7-**8**
Section 8.0 - Sample Preservation and Storage	**8**
Section 9.0 – Quality Control	**8-15**
Section 10.0 – Calibration and Standardization	1**5-21**
Section 11.0 – Procedure	21-**25**
Section 12.0 – Data Analysis and Calculations	**25**-31
Section 13.0 – Method Performance	31
Section 14.0 – Pollution Prevention	31
Section 15.0 – Waste Management	**31**
Section 16.0 – References	32
Section 17.0 – Attachments as Tables, Diagrams, Flowcharts and Validation Data	**32-33**
Attachment 1	**34**
Attachment 2	**35**
Attachment 3	**36**
Attachment 4	**37**
Attachment 5	**38**

ORIGINAL MASTER COPY CONTROLLED COPY
If words above are not highlighted, this is an uncontrolled copy of this document.

Instrument Procedure 194: GC/ECD Analysis of Polychlorinated Biphenyls (PCBs) as Aroclors in Water and Soil Extracts by SW-846 Method 8082 and Method 8082A

1.0 Scope and Application

This procedure is used to determine the concentration of various polychlorinated biphenyls (PCBs) as Aroclors in extracts from solid and liquid matrices by SW-846 Methods 8082 and 8082A. Open-tubular, capillary columns are employed with electron capture detectors (ECD). While SW-846 Methods 8082 and 8082A also provide for the analysis of individual PCB congeners, this procedure only deals with the determination of PCBs as Aroclors. The following are amenable to analysis using this method:

Compound Name	CAS Registry No.
Aroclor-1016	12674-11-2
Aroclor-1221	11104-28-2
Aroclor-1232	11141-16-5
Aroclor-1242	53469-21-9
Aroclor-1248	12672-29-6
Aroclor-1254	11097-69-1
Aroclor-1260	11096-82-5
Aroclor-1262	37324-23-5
Aroclor-1268	11100-14-4

Note: Aroclors 1262 and 1268 are not specifically mentioned in Method 8082 or Method 80802A.

Reporting Limits are listed in Attachment 1.

Staff members performing the procedures described in this SOP are responsible for reading, understanding, and complying with the SOP requirements. Supervisors are responsible for directing the analyst to the controlled SOP, and providing adequate explanation of the material contained therein.

This procedure is restricted to use by or under the supervision of analysts experienced in the instrumentation or preparative methods and who have demonstrated the ability to generate acceptable results through QC samples and analyst capability studies.

ORIGINAL MASTER COPY CONTROLLED COPY
If words above are not highlighted, this is an uncontrolled copy of this document.

This procedure encompasses both SW-846 Method 8082 and SW-846 Method 8082A. All samples for SC DHEC must be analyzed by SW-846 Method 8082A. This SOP is NOT for use with Ohio VAP projects. Please see Ohio VAP specific SOP.

2.0 Summary of Method

Prior to analysis, the sample must be extracted following Sample Preparation Procedure – 1049, "PCBs in Water Preparation Procedure," Sample Preparation Procedure –735 (-233→945), "Low Level Preparation for Analysis of PCBs only in Soil/Sediment/Sludge". Sample Preparation Procedure –247, Sample Preparation Procedure –236, "Soxhlet Extraction of S/S/S Samples by Method 3540C in SW-846 & NYSASP,"or "Automated Soxhlet Extraction of Soil/Sediment/Sludge and Wipe Samples by SW-846." A variety of optional cleanup steps may be used, including Florisil, Gel Permeation Chromatography (GPC) or acid wash.

The analysis is performed using the dual column option described in Method 8082 where a Y-splitter joins a single injection port with two dissimilar analytical columns. In this manner, confirmation is performed simultaneously with the primary analysis. After cleanup, if employed, the extract is analyzed by injecting 2 µL (1 µL per column) into a GC with dual wide-bore, fused silica, capillary columns with dual electron capture detectors (GC/ECD).

3.0 Definitions

3.1 Method Detection Limit (MDL) - The MDL is the minimum concentration of a substance that can be measured and reported with 99% confidence that the analyte concentration is greater than zero and is determined from the analysis of a sample in a given matrix containing the analyte. A minimum of seven sample replicates is required to calculate a statistical MDL. The MDL is an approximation of the DL. Any analyte concentration result at or above the MDL must also meet all qualitative identification criteria required by the test method in order to be reported as present.

3.2 Detection Limit (DL) - The DL is the smallest analyte that can be demonstrated to be different from zero or a blank concentration at the 99 % level of confidence. The false positive rate at the DL is 1% and the false negative rate is 50%. Any analyte concentration result at or above the DL must also meet all qualitative identification criteria required by the test method in order to be reported as present.

3.3 Limit of Detection (LOD) – The LOD is the smallest concentration of an analyte that must be present in a sample in order to be detected at a 99% confidence level. The false negative rate at the LOD is 1 %. For DoD-QSM,

non-detect sample results are reported as < LOD. Numeric values of measurements between the DL and the LOQ are reported as estimates. The DL < LOD ≤ LOQ.

3.4 Limit of Quantitation (LOQ) – The Limit of Quantitation is the lowest concentration of a substance that produces a quantitative result within specified limits of precision and bias. The LOQ must be within the calibration range.

3.5 Reporting Limit (RL) –

3.5.1 For Non-DoD work, the laboratory reporting limit is based on the lowest multipoint calibration standard concentration. For organic methods, values detected below the reporting limit and above the MDL may be reported and qualified as an estimated concentration.

3.5.2 The DoD-QSM defines the reporting limit as being the lowest concentration value specified by the client that meets project requirements for reporting data with known precision and bias for a specific analyte in a specific matrix. The LOQ cannot be greater than the RL. Data reported below the RL must be flagged as estimated values if they are also less than the LOQ.

3.**6** Reporting Units – µg/L for water matrix and µg/Kg for soil matrix

3.**7** A **Sample Data Group (**SDG**)** is defined by the following, whichever is more frequent:

- each 20 field samples received within a case, or
- each 7 calendar day period during which field samples in a case are received (14 calendar days if requested by the client) beginning with the receipt of the first sample.

NOTE: The DoD-QSM and SC DHEC do not accept the SDG approach, unless the samples are prepared in a single batch. When a group of up to 20 field samples of a similar matrix are prepared as one batch, method-specified QC samples such as a method blank, laboratory control sample, matrix spike, matrix spike duplicate, and matrix duplicate must also be prepared together at a rate of 5% for the DoD-QSM. If samples are batched together from different sites, project-specific QC must be processed.

3.**8** SC DHEC – South Carolina Department of Health and Environmental Control

3.**9** Aroclor 1660 – Term to denote a mixture of Aroclor 1016 and 1260

3.**10** DoD-QSM – Department of Defense-Quality Systems Manual

3.**11** Ohio VAP - Ohio Environmental Protection Agency Voluntary Action Program

3.**12** Extraction Batch – a group of up to 20 field samples of a similar matrix, method-specified QC samples such as a method blank, laboratory control sample, matrix spike, matrix spike duplicate, and matrix duplicate prepared together at the same time.

4.0 Interferences

4.1 Interferences in this method can be grouped into three broad categories: contaminated solvents, reagents, or glassware; contaminated GC carrier gas, parts, column surfaces, detector surfaces; and the presence of co-eluting compounds in the sample matrix that are also detected by the ECD. Specific cleanups may be necessary for samples, depending on the compounds of interest.

4.2 Interferences by phthalate esters introduced during the sample preparation procedures can be a major problem. Common flexible plastics found in certain gloves and other objects contain varying amounts of phthalates which may be introduced during lab operations. Cross-contamination of clean glassware routinely occurs when plastics are handled during extraction steps, especially when solvent wetted surfaces are handled. These interferences can be minimized by cleanup of solvents, reagents, and glassware.

4.3 Glassware must be scrupulously cleaned as soon as possible after use by rinsing with the last solvent used. This is followed by detergent washing with hot water, and multiple rinses with tap water and organic-free reagent water. Drain the glassware and dry in an oven at 130° C for several hours; or rinse with methanol and drain.

4.4 The presence of elemental sulfur will result in broad peaks that interfere with early eluting PCBs, and can be removed by cleaning the extract with shiny copper or by the use of GPC cleanup, or with tetrabutylammonium (TBA) sulfite reagent.

4.5 Waxes, lipids, and other high molecular weight compounds can be removed using GPC.

5.0 Safety

Appropriate protective equipment and clothing must be used under the assumption that all samples are potentially hazardous. During sample preparation, glasses, gloves and lab coats are a minimum requirement. The persistent presence of noxious odors may be indicative of failure of the laboratory ventilation system and must be reported to a supervisor or manager.

Laboratory staff members are required to review the Chemical Hygiene Plan for general safety policies, and Material Safety Data Sheets for reagents used in the laboratory.

6.0 Equipment & Supplies

6.1 Gas chromatograph: Trace GC Series 2000 and Agilent Technologies 6890N, with all required accessories, including syringes, analytical columns, gases, dual ECDs, and integrator or data system.

6.2 The following wide-bore columns are used in the analysis:

6.2.1 Column 1-30 m x 0.32 mm ID fused silica capillary column bonded with 35% phenyl methylpolysiloxane (clpest), 0.50 μm film thickness

6.2.2 Column 2 - 30 m x 0.32 mm ID fused silica capillary column chemically bonded with 50% phenyl methylpolysiloxane (clpest2), 0.42 μm film thickness

6.2.3 Wide-bore columns are installed in 1/4 inch injectors, with deactivated liners designed specifically for use with mega-bore columns

6.2.4 Restek Y-shaped fused silica connector

6.3 Data system: Standards and samples are processed using the EZ Chrom® Elite version 2.6.1 data acquisition system, Target® version 12.0.0.124 Quick Forms report generation software from ThruPut Systems, and Promium Element® LIMS version 6.01:4045, plus revisions.

7.0 Reagents & Standards

Details for the standard preparation are contained in the Standards Preparation Logbook (22F) or Promium Element LIMS.

Note: All spiking standard information is entered into the LIMS. To obtain information on any standard, access Element, click on "Laboratory," and scroll down and access "Standards." Standards can be sorted by Department. Select the standard you would like to access. The view will show lot number, prepared dates, solvent, vendor, composition, and concentration.

All standards are prepared in the Organic Standards Laboratory. Standards are stored separately from samples at 2-6 ^{o}C in the laboratory when not in use. Stock solutions must be prepared every six months or sooner if comparisons with quality control check samples indicate degradation or concentration of solution compounds.

Note: All standards and reagents are subject to change in vendor and in concentration. The Reporting Limits are also subject to change, but must remain at or above the lowest point in the calibration.

Note: All reagents and standards must be ACS (American Chemical Society) grade or equivalent. All standards and reagents are subject to change in vendor and in concentration. The Reporting Limits are also subject to change, but must remain at or above the lowest point in the calibration.

7.1 Reagent water – All water used in this procedure must be equivalent to ASTM Type II water (as it relates to specific conductance and specific resistance) which is demonstrated to meet the blank contamination acceptance criteria contained in this Standard Operating Procedure (SOP). It is referred to throughout the remainder of this SOP as DI water.

7.2 Hexane – pesticide grade

7.3 Tetrabutylammonium sulfite reagent

7.3.1 Tetrabutylammonium hydrogen sulfate – 97%, Sigma-Aldrich

7.3.2 Sodium sulfite – ACS grade, 98% EM Science

7.4 Stock standard solutions (1 mg/mL) are purchased from Restek Corporation, for example, as certified solutions.

7.5 Prepare calibration standards at 100, 200, 400 (M2 level), 800, and 1600 ng/mL by diluting the stock standards solutions with hexane. See Standards Preparation Logbook 22F for details.

7.6 Separate calibration standards are used for each multi-component analyte, with the exception of Aroclors 1016 and 1260, which can be run as a mixture. The mixture is referred to as Aroclor 1660. See Standards Preparation Logbook 22F for details.

7.6.1 The second source Initial Calibration Verification (ICV) standard is Aroclor 1660, prepared at 100 ηg/mL. See Standards Preparation Logbook 22F for details.

8.0 Sample Preservation and Storage

8.1 Samples are preserved and stored according to the tables in Sample Control SOP 4.1, "Receiving Samples" and 4.6, "Storing Samples." Sample holding times are also listed.

8.2 Prior to analysis, all extracts must be stored under refrigeration at 2-6 °C in the reach-in storage unit in the laboratory. After analysis, extracts are returned to Sample Control for long-term storage and disposal.

8.3 All extracts must be analyzed within 40 days of extraction.

|9.0 Quality Control

9.1 Method Blank

9.1.1 A Method Blank is extracted with each preparation batch of up to 20 samples.

9.1.2 The acceptance criteria for method blanks include the following:

9.1.2.1 Surrogates acceptance criteria must be met. (See Section 9.2)

9.1.2.2 Established retention time windows must be met.

9.1.2.3 All target analytes must be below the reporting limit.

9.1.2.4 To meet the requirements of the DoD-QSM, no target analytes may be present at concentrations above half the reporting limit. Reference DoD-QSM data qualifying flag (B).

9.1.3 If the method blank exceeds acceptance criteria, the source of the problem(s) must be investigated and appropriate corrective action taken. Instrument maintenance may be necessary. (See Section 9.5.) Reanalyze the blank. If reanalysis fails, all samples prepared with a method blank that does not meet acceptance criteria must be re-extracted and reanalyzed.

9.2 Surrogates

9.2.1 Control limits for surrogates are shown in the following table. Surrogate recoveries must be met for all samples, blanks, laboratory control samples, matrix spikes, and matrix spike duplicates.

Surrogate	**Percent Recovery Range**	
	Water	Soil
Tetrachloro-m-xylene	43-135	43-135
Decachlorobiphenyl	43-144	43-144

If both surrogates (tetrachloro-m-xylene and decachlorobiphenyl) are outside the control range on both columns, the sample must be re-extracted and re-analyzed. Only one surrogate out of the four is required to pass on one column.

9.2.2 Established retention time windows must be met.

9.2.3 An exception to the above criteria is allowed for field samples and matrix spikes if the recovery is out of range due to interfering peaks. Chromatograms must be examined to determine if the out of control condition may be attributed to sample interferences, or to a partial injection, before re-extracting the sample.

9.2.3.1 Partial injections are re-injected. Partial injections are diagnosed by comparing the solvent peak of the sample to the solvent peak of the standard. Solvent peaks are similar in size for complete injections.

9.2.4 The following table contains the DoD-QSM requirement for surrogate control limits. Surrogate recovery criteria must be met on both columns.

Surrogate	Aqueous	Solid
Decachlorobiphenyl	40-135	60-125

9.2.4.1 If the criteria in Section 9.2.3 are not met, the DoD-QSM requires the field and QC samples be reanalyzed or re-extracted (if sufficient sample remains).

9.2.4.2 Field and QC samples reported with failing surrogates are qualified in the narrative, referencing the applicable DoD-QSM data flag (Q or J).

9.3 Laboratory Control Sample (LCS)

9.3.1 Routinely, an LCS is DI water for water matrices; and furnaced Ottawa sand or sodium sulfate for solid matrices. The LCS is spiked with the Aroclor of interest and surrogates. The LCS is prepared with each preparation batch of samples. For SC DHEC, the LCS is performed at a frequency of 5%.

9.3.2 LCS recovery limits are as follows.

9.3.2.1 Aroclor recovery limits:

Analyte	**Aqueous % Recovery**	**Solid % Recovery**
Aroclor 1016	63-132	50-145
Aroclor 1260	59-120	37-137

9.3.2.2 The LCS control limits required by the DoD-QSM are as follows:

Analyte	Aqueous % Recovery	Solid % Recovery
Aroclor 1016	25-145	40-140
Aroclor 1260	30-145	60-130

9.3.2.2.1 If the LCS fails the DoD-QSM acceptance criteria, correct the problem then re-extract and reanalyze the associated samples.

9.3.2.2.2 If corrective actions fail, e.g., insufficient sample remains for extraction, report data associated with failing LCS. Qualify the specific analytes in the associated field and QC samples in the narrative, referencing the appropriate DoD-QSM data flag (Q).

9.3.3.1 The LCS control limits required by SC DHEC are as follows:

Analyte	Aqueous % Recovery	Solid % Recovery
Aroclor 1016	70 - 130	70 - 130
Aroclor 1260	70 - 130	70 - 130

9.3.4 Surrogate acceptance criteria must also be met. See Section 9.2.

9.3.5 Established retention time windows must be met.

9.3.6 If the LCS fails to meet the above acceptance criteria, all samples in the associated extraction batch must be re-extracted and reanalyzed unless the LSC fails high for analytes and all of the associated samples were non-detects for all Aroclors of interest. (See Section 9.3.2 for control limits.)

9.4 Matrix Spikes

9.4.1 A matrix spike and matrix spike duplicate (MS/MSD) must be performed for each sample delivery group of up to 20 field samples. For SC DHEC,

the matrix spike/matrix spike duplicate are performed at a frequency of 10%.

9.4.2 Established retention time windows must be met.

9.4.3 The percent recovery and relative percent difference (RPD) criteria for the MS/MSD are shown in the following table.

Analyte	Aqueous % Recovery	Aqueous %RPD	Solid % Recovery	Solid %RPD
Aroclor 1660	50-150	20	50-150	20

9.4.3.1 To meet the requirements of the DoD-QSM, the duplicate matrix spike should meet the control limit requirements for the LCS. The % RPD should be ≤ 30%.

9.4.3.1.1 If the DoD-QSM acceptance criteria are not met for the duplicate matrix spikes, contact the client for guidance.

9.4.3.1.2 Qualify the original sample associated with the failing duplicate matrix spikes in the narrative. Reference DoD-QSM data qualifying flag (J).

9.4.3.2 The recoverability of spiked analytes in environmental samples is highly influenced by the particular matrix. When recoveries do not meet the acceptance criteria or interferences preclude proper assessment of the data, results of an LCS are evaluated to verify that the analytical systems (sample preparation and analysis) are in control.

9.4.3.3 If the original unspiked sample does not meet surrogate acceptance criteria and the MS/MSD do meet criteria, the sample should be reanalyzed or re-extracted then reanalyzed. If the original sample and the MS/MSD yield the same unacceptable surrogate recoveries, then further action is not required since matrix interference would be confirmed.

9.5 Corrective Action

9.5.1 Routine Instrument Maintenance includes trimming the front end of the column, replacing the column, cleaning the injection port and replacing the syringe, replacing the liner, replacing the septum and baking the column at a temperature above routine analysis, but below the maximum isothermal temperature rating of the column.

9.5.1.1 Trouble shooting Initial Calibration Failure:

9.5.1.1.1 When linearity is difficult to achieve, verify that the appropriate length of column is inserted in the detector. Examine all column ends and determine if the ends of the columns need to be trimmed. The removal of 0.5 meters of the detector end of the column may be indicated.

9.5.1.1.2 Compare responses for the analytes in each of the standard levels to verify that a single standard analysis is not presenting results significantly higher or lower then the other standard analyses. If that is the case, the wrong standard may have been injected, or the standard may have been prepared incorrectly. Reanalyze the standard and calculate the response factors and % RSD.

9.5.1.1.3 Check the instrument operating conditions and perform maintenance as necessary. It may be necessary to perform column maintenance, change the column, or take other corrective action to achieve the technical acceptance criteria. It may be necessary to prepare fresh initial calibration standards.

9.5.1.1.4 If instrument maintenance or the preparation of fresh initial calibration standards is necessary a new initial calibration must be analyzed.

9.5.1.2 Trouble shooting Continuing Calibration Verification

9.5.1.2.1 When calibration verifications fail recovery low, verify that the correct peaks are being named. Also verify that the syringe is not plugged and change the septum. If the calibration verification fails again, examine the chromatography to determine if there is a problem with

the baseline that is causing the failure. If so, bake the column for 1 hour or less to see if this can be corrected. Also, if the calibration verification is failing on only one column, the y-splitter may be plugged. If the calibration verification continues to fail, the instrument will need a new calibration curve.

9.5.1.2.2 When calibration verifications fail recovery high, verify that the correct peaks are being named. Examine the chromatography to determine if there is contamination on the column that is causing the failure. If so, bake the column for 1 hour or less to see if this can be corrected. If the calibration verification fails again, the instrument will need a new calibration curve.

9.5.1.2.3 When the calibration verification fails due to drift, change the septum and verify that all the column fittings are secure. Also, determine if there is contamination on the column that is causing the failure. If so, bake the column for 1 hour or less to see if this can be corrected. If the calibration verification still fails, it is permissible to update retention times once per 24 hours period. Record in the instrument run log when the retention times are updated.

9.5.1.3 Trouble shooting Instrument Blank Failure

9.5.1.3.1 When the instrument blanks fail, examine the chromatography to determine if there is contamination in the column that is causing the failure. If so, bake the column for 1 hour or less to see if this can be corrected. If the contamination is such that baking for 1 hour does not improve the baseline, it may be necessary to change the septum and liner.

9.6 Standard related corrective action includes preparing new standards from existing stock solutions and preparing new stock solutions.

9.6.1 If surrogate or spiking solutions are suspected of needing to be replaced notify the preparation laboratory supervisor as soon as possible.

9.6.2 Request an aliquot of the solution and analyze. Report results to the preparation laboratory supervisor.

9.7 Contingency

9.7.1 If due to a lab accident or to QC failures, a re-preparation and analysis are required for the sample and insufficient sample volume remains, the Project Manager must be alerted and will contact the client for direction on how to proceed.

9.7.2 If persistent contamination occurs in the laboratory, analysis must be halted until the source of the contamination can be identified and isolated. When the contamination issue is resolved, sample analysis may proceed.

9.7.3 Any other issues that potentially affect data quality should also be addressed with the Project Manager.

10.0 Calibration & Standardization:

Note: All calibration criteria independently apply to both columns**.**

Note: The individual areas of three to five representative peaks are used to calibrate and quantitate each Aroclor**.**

10.1 Retention Time Windows

10.1.**1** Retention time windows are established for each chosen characteristic Aroclor component (peak). The width of the retention time windows is based on actual retention times of selected peaks in the standards that are assessed over a 72-hour period. A standard deviation is calculated for each component.

10.1.**2** For each Aroclor component chosen (3-5 peaks), the absolute retention time from each "daily" CCV standard is used as the midpoint of the window. A ± three times standard deviation value is applied to the absolute retention time. Windows are defined as ± three times the standard deviation of the absolute retention times of each chosen Aroclor component. Analyst experience is critical in the interpretations of the chromatograms.

10.2 Initial Calibration

10.2.1 For the initial calibration five concentration levels are prepared for Aroclors 1016/1260. Single standards for the remaining Aroclors are prepared at the mid-concentration. The M2 level for Aroclors 1221, 1232,

1242, 1248, and 1254 are used for pattern recognition and to generate calibration factors for them. On a project-specific basis, five concentration levels may be required for the remaining Aroclors. Additionally, Aroclors 1262 and 1268 may be requested

10.2.1.1 Analyze a five-point initial calibration for Aroclors 1016 and 1260 at 100, 200, 400, 800, and 1600 ηg/mL; surrogate TCX at 5.0, 10, 20, 40, and 80 ηg/mL; surrogate DCB at 10, 20, 40, 80, and 160 ηg/mL. Analyze the single-point initial calibration standards containing Aroclors 1221, 1232, 1242, 1248, and 1254 at 400 ηg/mL and surrogates at 20 ηg/mL for TCX and 40 ηg/mL for DCB.

Note: The single-point calibration standards may be run before or after the five-point Aroclor 1016/1260 initial calibration standards.

10.2.1.2 On a project-specific basis, if a sample is analyzed and any of the Aroclors analyzed as a single point are detected, a three- or five-point calibration may be analyzed for a particular Aroclor. The calibration standards are prepared at the following levels:

- Aroclors 1221, 1232, 1242, 1248, 1254, 1262, and 1268 at 100, 200, 400, 800, and 1600 ηg/mL

- Surrogates
  - TCX at 5.0, 10, 20, 40, and 80 ηg/mL
  - DCB at 10, 20, 40, 80, and 160 ηg/mL

10.2.1.3 For samples analyzed in compliance with the DoD-QSM, the average calibration factor from a five-point initial calibration curve must be used to quantitate Aroclors 1221, 1232, 1242, 1248, and 1254.

10.2.2 A minimum of five sets of calibration factors are generated for the Aroclor 1016/1260 standards. Each set consists of the calibration factor for each of the five peaks chosen. The single standard of the remaining Aroclors will each produce a minimum of three calibration factors, one for each selected peak.

10.2.3 The initial calibration standard sequence is as follows.

ICAL Sequence Injection Number	Initial Calibration Standard Sequence
1	AR1221-M2
2	AR1232-M2
3	AR1242-M2
4	AR1248-M2
5	AR1254-M2
6	AR1660-1
7	AR1660-2
8	AR1660-3
9	AR1660-4
10	AR1660-5
11	Second Source AR1660

10.2.4 Initial Calibration Criteria for 8082

10.2.4.1 The percent Relative Standard Deviation (% RSD) of the calibration factors for each selected Aroclor component in the initial calibration must be less than or equal to 20%. The % RSD for Aroclors is calculated by determining the mean of the average of the five selected peaks in each standard level. Acceptance criteria must be met by the average of the five peaks, as opposed to each individual peak. When the % RSD is ≤ 20%, the instrument response is considered to be linear and the mean calibration factor can be used for quantitation.

10.2.5 Alternate Initial Calibration Criteria for 8082

10.2.5.1 If the % RSD is greater than 20%, the analyst will check for outliers. Reanalyze any outliers to verify initial results.

10.2.5.2 Alternatively a linear least squares regression is available in the ThruPut system. The use of quadratic fit to demonstrate the linearity of the initial calibration is not allowed.

10.2.**5**.**2**.1 When the linear option is used, the line must not be forced through the origin (zero) and the correlation coefficient of the equation must be 0.99 or greater for a valid calibration. The DoD-QSM requires the correlation coefficient to be ≥ 0.995.

10.2.5.3 Another alternative is to use the "grand mean". The mean of the % RSD for all of the component peaks present in the calibration standard is calculated and must be ≤ 15%. The client must be provided with a list of the individual compounds that did not meet the ≤ 15% RSD criteria.

Note: Notify project management if "grand mean" is used.

Note: Calibration using the "grand mean" is not allowed by the DOD-QSM.

10.2.5.4 If the initial calibration continues to fail acceptance criteria, perform corrective action as needed (See Section 9.5) and repeat the initial calibration.

10.2.6 Initial Calibration Criteria for 8082A

10.2.6.1 Each of the component peaks must have an % RSD of ≤ 20% or have a linear regression correlation coefficient of ≥ 0.990 (≥ 0.995 for DOD-QSM) for the initial calibration for that compound to be acceptable.

10.2.6.1.1 Average response factor must not be used for component peaks that have a % RSD > 20% unless the concentration is reported as estimated.

10.2.6.1.2 If linear regression is used to calibrate a component peak, the viability of the quantitation limit should be checked. Requantitate the low point of the calibration curve as an unknown. The concentration must be ± 30% of the true value. Any compound which fails this criterion must only be reported as an estimate value.

10.2.6.1.3 If the initial calibration continues to fail acceptance criteria, perform corrective action as needed (See Section 9.5) and repeat the initial calibration.

10.3 Initial Calibration Verification for 8082 and 8082A

10.3.1 Analyze a second source initial calibration verification (ICV) standard to verify the standard curve before proceeding with analyses.

10.3.2 The acceptance criteria for the ICV are ± 20% of the true value.

10.3.2.1 If the ICV criteria are not met, instrument maintenance (See Section 9.5.1) or re-preparation of the ICV standard (See Section 9.6) may be necessary.

10.3.2.2 If after instrument maintenance and re-preparation, the ICV still fails, prepare a new initial calibration curve with fresh standards.

10.4 **Continuing** Calibration Verification for 8082

Note: Aroclor 1660 is used for the calibration verification**.**

10.4.1 The calibration factors in all continuing calibration verification (CCV) standards must be within ± 15% difference (% D) when compared to the mean calibration factors from the initial calibration on both analytical columns. The % D is calculated by determining the average % D of the five selected peaks for each Aroclor.

10.4.2 Another alternative is to use the "grand mean". The mean of the % RSD for all of the component peaks present in the CCV standard is calculated and must be ≤ 15%. The client must be provided with a list of the individual compounds that did not meet the ≤ 15% RSD criteria.

Note**:** Notify project management if "grand mean" is used.

Note: Calibration using the "grand mean" is not allowed by the **DoD**-QSM.

10.4.3 If the % D still exceeds ±15%, then corrective action must be taken and the CCV re-injected. If the calibration still exceeds the criteria, a new initial calibration must be analyzed.

10.4.4 If any of the continuing calibration Aroclor components fall outside their retention time windows, which can be updated every 24 hours as needed, the system is out of control and corrective action must be taken to correct the problem. If, after re-injection of the standard following corrective action, the retention times are still outside the windows, a new initial calibration must be analyzed.

10.4.5 All samples must be bracketed by passing CCVs, unless the following conditions are met:

10.4.5.1 A "closing" CCV standard fails to meet criteria due to being more than 15% D above the mean calibration factor from the initial calibration.

10.4.5.2 No Aroclors were detected in the sample.

10.4.5.3 If both of the above criteria are not met, all of the samples associated with the failing "closing" CCV must be reanalyzed.

10.5 **Continuing** Calibration Verification for 8082A

Note: Aroclor 1660 is used for the calibration verification**.**

10.5.1 The calibration factors in all continuing calibration verification (CCV) standards must be within ± 20% difference (% D) when compared to the mean calibration factors from the initial calibration on both analytical columns.

Note: The "grand mean" option is not allowed by the SW-846 Method 8082A.

10.5.2 If the % D exceeds ± 20%, then corrective action must be taken and new initial calibration must be analyzed.

10.5.3 If any of the continuing calibration Aroclor components fall outside their retention time windows, which can be updated every 24 hours as needed, the system is out of control and corrective action must be taken to correct the problem. If, after re-injection of the standard following corrective action, the retention times are still outside the windows, a new initial calibration must be analyzed.

10.5.4 All samples must be bracketed by passing CCVs, unless the following conditions are met:

10.5.4.1 A "closing" CCV standard fails to meet criteria due to being more than 20% D above the mean calibration factor from the initial calibration.

10.5.4.2 No Aroclors were detected in the sample.

10.5.4.3 If both of the above criteria are not met, all of the samples associated with the failing "closing" CCV must be reanalyzed.

11.0 Procedure

Documentation must follow the requirements in Quality Control SOP 13.6, "Proper Documentation Procedures". The run log (Attachment 3) must contain the date of the injection, the volume of the extract injected, standard identification numbers, sample identification numbers, Case/SDG numbers, any comment relevant to the injection, and any preventive maintenance performed. Circle the Method used to perform the analysis. All samples for SC DHEC must be analyzed by EPA 8082A. Condition codes, abbreviations defined in Attachment 4, are used to document failed and qualified injections. Preventive maintenance includes clipping the front-end of the column, changing liners and septum. Any major maintenance, i.e., changing the column or the detector, is recorded in the instrument maintenance logbook (Attachment 2).

11.1 Dual Column Analysis and Confirmation

11.1.1 The dual column/dual detector approach involves the use of two 30 m x 0.32 mm ID fused silica open-tubular columns of different polarities (clpest and clpest2). Each has different selectivities towards the target compounds. The columns are connected to a "Y-splitter" and dual ECD detectors.

11.2 GC operating conditions (subject to change) are as follows:

11.2.1 Column 1

- Type: clpest
- Dimensions: 30 m x 0.32 mm ID
- Film Thickness: 0.50 µm

11.2.2 Column 2

- Type: clpest2
- Dimensions: 30 m x 0.32 mm ID

- Film Thickness: 0.42 μm

11.2.3 Carrier gas

- Helium
- Flow rate: 6 mL/minute

11.2.4 Makeup gas

- Argon/methane
- Flow rate 20 mL/minute

11.2.5 Temperature program

- Hold at 150° C for 1.0 minute
- Ramp to 275° C at 5 degrees/minute
- Hold for 2.0 minutes

11.2.6 Injector temperature: 250° C

11.2.7 Detector temperature: 300° C

11.2.8 Injection volume: 2 μL (1 μL per column)

11.2.9 Solvent

- Hexane

11.2.10 Detector: Dual ECD's

11.2.11 Range: 10

11.3 Gas chromatographic analysis:

11.3.1 The GC is set up according to the operating conditions detailed above. A final temperature of 240 - 275° C is necessary to elute Decachlorobiphenyl.

11.3.2 The initial calibration is performed according to the discussion in Section 10.0. The initial calibration is verified once using a second source standard (ICV).

11.3.3 A CCV standard is run during each 12 hour shift (after every 10 samples for DoD-QSM requirements) using a mid-level calibration standard. Within the 12-hour period, and based on current GC run conditions, approximately 10 samples will be analyzed. Since an analytical sequence may continue as long as instrumental QC criteria are met, the end of one 12-hour sequence is considered to be the beginning of the next 12-hour sequence. The calibration factor must meet acceptance criteria when compared to the initial calibration curve. When this criterion is exceeded, corrective action is required as described in Section 9.5 and 10.0 and may include re-injection of the calibration verification standard or analysis of a new initial calibration.

11.3.4 For SW-846 Method 8082, each sample analysis must be bracketed with an acceptable initial calibration and CCV standards.

11.3.4.1 If a "closing" CCV standard, which is injected after a group of samples, fails to meet criteria due to being more than 15%D <u>above</u> the mean calibration factor from the initial calibration, and the Aroclor was not detected in that group of samples, then the samples do not require reinjection.

11.3.4.2 If the “closing” CCV standard is more than 15%D below the mean calibration factor from the initial calibration, then re-injection of the group of samples is required.

11.3.5 For SW-846 Method 8082A, each sample analysis must be bracketed with an acceptable initial calibration and CCV standards.

11.3.5.1 If a "closing" CCV standard, which is injected after a group of samples, fails to meet criteria due to being more than 20%D <u>above</u> the mean calibration factor from the initial calibration, and the Aroclor was not detected in that group of samples, then the samples do not require reinjection.

11.3.5.2 If the “closing” CCV standard is more than 20%D <u>below</u> the mean calibration factor from the initial calibration, then re-injection of the group of samples is required.

11.4 Identification and Quantitation

Note: If any of the surrogates or spike compounds are missing or failing, check the peak integration in "Target Review". Changes can be made in Target Review and manual peak integration chromatograms can be generated. Any compound for which manual peak integration has been performed will have an "M" flag displayed on the quantitation report. All manual integration must follow the procedures documented in SOP 13.18, "Manual Chromatographic Peak Integration Procedures." These entries must be assigned a numerical code and the analyst's initials and the date must appear on each quantitation report page containing an "M" flag. For multiple "M" flags appearing on a quantitation report page, a bracket encompassing the flags can be used, with a single entry of the initials and date. The department supervisor or a representative of the QA department must approve of all manual integrations performed on all initial and continuing calibration standards. This is documented by initialing and dating each page of the quantitation report of the raw data containing such manual integrations. See Attachment 5 for definitions of manual integration codes.

11.4.1 Compound identification is based on a second column confirmation, with the second column being of a dissimilar nature. Target analyte peaks must fall within the retention time windows on both columns.

11.4.1.1 Tentative identification of an analyte occurs when three or more of the chosen Aroclor component peaks from a sample extract fall within the retention time windows and the pattern matches that of the Aroclor standard.

11.4.1.2 When samples contain more than one multi-component analyte, a more experienced analyst may be required to process or assess the data. Similar conditions exist when multi-component analytes have been subjected to environmental degradation, resulting in weathered Aroclors that may have significant differences in peak patterns than the standards.

11.4.2 Quantitation is based on the area under the characteristic peaks as compared to the area under the corresponding peaks in the calibration standard at the same retention times. The external standard calibration method is used for quantitation. See Section 12.0 for calculations.

11.4.2.1 Use the external standard calibration procedure to establish mean response factors for each chosen Aroclor component by dividing peak area in the standard by the mass injected. Peak areas from peaks within the chosen Aroclor component's retention time window are used to calculate the quantity of each target Aroclor while retention times are used to identify each component.

11.4.2.2 The analyte concentration reported is the higher of the two concentrations detected on the dual column analyses for Method 8082 and the lower of the two concentrations for Method 8082A, unless overlapping peaks are interfering with the accurate quantitation of the analytes. If interferences are present, the analyte concentration is reported from the column without the interferences. If there is > 40 % difference between the two columns, the data is flagged with a "P" and discussed in the narrative.

11.4.2.2.1 To meet the requirements of the DoD-QSM, the narrative must reference the "Q" flag for results with a > 40% difference between the columns.

11.4.2.3 The Aroclors are quantitated using responses of three to five major peaks of the sample pattern compared to the calibration factors of the same peaks in standard. Those concentrations are averaged to arrive at the reported concentration.

12.0 Data Analysis & Calculations

Calculations must be consistent with the QC SOP: Numerical Data Reduction.

12.1 Calculation of the mean or average of a set of values:

$$\overline{X} = \frac{\sum_{i=1}^{n} X_i}{n}$$

where: n = total number of values
x_i = each individual value used to calculate the mean

x = the mean of n

12.2 Calculation of the standard deviation of a set of values:

$$\text{Standard deviation} = \sqrt{\frac{\sum_{i=1}^{n}\left(X_n - \overline{X}\right)^2}{n-1}}$$

12.3 Calculation of percent recovery:

12.3.1 LCS and surrogates:

$$\%R = \frac{Amount\ found}{Amount\ spiked}\ x\ 100$$

12.3.2 Matrix spikes:

$$\%\ \mathrm{R} = \frac{Amount\ in\ spiked\ sample - Amount\ in\ unspiked\ (native)\ sample}{Amount\ spiked}\ x\ 100$$

12.4 Calculation of % RSD

$$\%\mathrm{RSD} = \left(\frac{Standard\ deviation}{\overline{\mathrm{X}}}\right) \times 100$$

12.5 Calculation of RPD

$$RPD = \frac{|Value\ 1\ -\ Value\ 2|}{\left(Value\ 1\ +\ Value\ 2\right)/2}\ x100$$

12.6 Calculation of %Difference (% D)

$$\%Diff = \frac{Value\ -\ \overline{Reference\ \ value}}{\overline{Reference\ \ value}}\ x\ 100$$

12.7 Calibration factors are calculated by dividing the total peak area for each chosen Aroclor component in the standard by the total mass injected (in nanograms).

$$Calibration\ Factor\ (CF) = \frac{Peak\ area}{Total\ mass\ injected}$$

12.8 Linear Calibration using Least Squares Regression

General linear equation: $y = ax + b$

Where: y = Instrument response (peak area)
a = Slope of the line (coefficient of x)
x = Mass of the analyte in the calibration standard aliquot injected
b = y-intercept

Linear Regression by Least Squares:

$$y_1^{'} = ax_i + b$$

Where: b = intercept
x_i = Mass of the analyte in the ith calibration standard aliquot injected
$y_1^{'}$ = calculated response for the ith calibration standard

The sum of the squares of the differences is minimized to obtain a and b:

$$\sum_{i=1}^{N} (y_i - y_1^{'})^2$$

12.9 Correlation Coefficient r:

$$r = \frac{N\left[\sum_{i=1}^{N}(x_i y_i)\right] - \left[\sum_{i=1}^{N}(x_i)\right]\left[\sum_{i=1}^{N}(y_i)\right]}{\sqrt{N\left[\sum_{i=1}^{N}(x_i^2)\right] - \left[\sum_{i=1}^{N}(x_i)\right]^2} - \sqrt{N\left[\sum_{i=1}^{N}(y_i^2)\right] - \left[\sum_{i=1}^{N}(y_i)\right]^2}}$$

Where: r = Correlation Coefficient
N = number of data points (equals 5 in a 5 point curve)
y = response
i = index variable (first data point i = 1)
x = Mass of the analyte in the calibration standard aliquot injected

12.10 Concentration

12.10.1 Concentration of aqueous samples:

12.10.1.1 Concentration of each peak in an Aroclor using Mean Concentration Factor:

$$\mu g / L = \frac{(Ax)(Vt)(Df)}{(\overline{CF})(Vi)(Vo)}$$ of each peak in the Aroclor

Where: Ax = area response for the analyte
Vt = volume of the concentrated extract (µ**L**)
Df = dilution factor. If no dilution, Df = 1.0
$\overline{CF}$ = mean calibration factor from the initial calibration for each peak in the Aroclor
Vo = volume of water sample extracted (m**L**)
Vi = volume of extract injected (µ**L**)

12.10.1.1.1 Concentration of the Aroclor in the sample:

Concentration ($\mu g / L$) = $\overline{X}$

Where $\overline{X}$ = the mean of concentration all of the peaks; See Section 12.1

12.10.1.2 Concentration of each Aroclor peak in aqueous samples for GC analysis using linear regression:

$$ug / L = \frac{(a(Ax) + b)(Vt)(Df)}{(Vi)(Vo)}$$

Where: Ax = area response for the analyte
Vt = volume of the concentrated extract (µ**L**)
Df = dilution factor. If no dilution, Df = 1.0

a = slope
b = y-intercept
Vo = volume of water sample extracted (**mL**)
Vi = volume of extract injected (µ**L**)

12.10.1.2.1 Concentration of the Aroclor in the sample:

Concentration ($\mu g / L$) = $\overline{X}$

Where $\overline{X}$ = the mean of concentration all of the peaks; See Section 12.1.

12.10.2 Concentration of soil samples <u>(dry weight basis)</u>

12.10.2.1 Concentration of soil samples <u>(dry weight basis)</u> for each peak using Mean Calibration Factor

$$\mu g / kg = \frac{(Ax)(Vt)(Df)}{(\overline{CF})(Vi)(Ws)(D)}$$ for each peak in the Aroclor

Where: Ws = weight of sample extracted, in grams

$$D \text{ (dry weight)} = \frac{100 - \%\text{ moisture}}{100}$$

Ax, Vt, Df, $\overline{CF}$, Vi have the same definitions as for water.

12.10.2.1.1 Concentration of the Aroclor in the sample:

Concentration ($\mu g / kg$) = $\overline{X}$

Where $\overline{X}$ = the mean of concentration all of the peaks; See Section 12.1

12.10.2.2 Concentration for each Aroclor peak in soil samples for GC analysis using linear regression:

$$\mu g / kg = \frac{(a(Ax)+b)(Vt)(Df)}{(Vi)(Ws)(D)}$$

Where: Ws = weight of sample extracted, in grams
D (dry weight) = 100 - % moisture100
Ax = area response for the analyte
Vt = volume of the concentrated extract (µ**L**)
Df = dilution factor. If no dilution, Df = 1.0
a = slope
b = y-intercept
Vo = volume of water sample extracted (**mL**)
Vi = volume of extract injected (µ**L**)

12.10.2.2.1 Concentration of the Aroclor in the sample:

Concentration ($\mu g / kg$) = $\overline{X}$

Where $\overline{X}$ = the mean of concentration all of the peaks; See Section 12.1

12.11 Calculating Dilutions

12.11.1 If the response of the majority of the chosen Aroclor components exceeds the on-column amount of the high level Aroclor 1660 standard, it must be diluted and re-analyzed. Comparing the on-column nanogram amount of the chosen Aroclor components with the nanogram amounts of the same chosen Aroclor components from the high level standard used in the initial calibration will allow you to determine an appropriate dilution.

12.11.2 If a sample concentration exceeds the high level standard a dilution must be performed. Determine a level of dilution that will result in a value within the upper half of the calibration range. This is an acceptable dilution. A 10x dilution is performed using 1 mL sample plus 9 mL diluent for a total volume of 10 mL. It should be recorded on the run log as "10x (1 mL in 10 mL)."

13.0 <u>Method Performance</u>

This method was validated through in-house laboratory studies of method detection limits and precision and accuracy for single analyst. The data are retained by the QA department.

14.0 Pollution Prevention

The solvents used in this procedure pose little threat to the environment when recycled and managed properly. Pollution prevention encompasses any technique that reduces or eliminates the quantity or toxicity of waste at the point of generation. Numerous opportunities for pollution prevention exist in laboratory operation. The EPA has established a preferred hierarchy of environmental management techniques that places pollution prevention as the management option of first choice. Whenever feasible, laboratory personnel should use pollution prevention techniques to address their waste generation. When wastes cannot be feasibly reduced at the source, the Agency recommends recycling as the next best thing.

15.0 Waste Management

It is the laboratory's responsibility to comply with all federal, state, and local regulations governing waste management, particularly the hazardous waste identification rules and land disposal restrictions, and to protect the air, water, and land by minimizing and controlling all releases from fume hoods and bench operations. Compliance with all sewage discharge permits and regulations is also required.

Samples preserved with HCl, HNO_3, or H_2SO_4 to pH < 2 are hazardous and must be neutralized before being disposed, or must be handled as hazardous waste.

Refer to the Hazardous Waste Management and Safety SOPs located in the lab.

16.0 References

16.1 "Test Methods for Evaluating Solid Wastes: Physical/Chemical Methods", SW-846, 3rd Edition, Update III, 12/96, Method 8082

16.2 Standard Methods for the Examination of Water and Wastewater, 20th (1998), Method 1080

16.3 Quality Control SOP 13.6, "Proper Documentation Procedures"

16.4 Quality Control SOP 13.4, "Numerical Data Reduction"

16.5 "Less is Better: Laboratory Chemical Management for Waste Reduction," American Chemical Society Department of Government Relations and Science Policy, 1155 16th Street, N.W., Washington DC, 20036, (202) 872-4477.

16.6 Hazardous Waste Management & Safety SOPs: "Hazardous Waste Disposal" and "Spill Control & Cleanup."

16.7 NELAC Standards, effective July 2003, plus revisions

16.8 CompuChem Quality Manual, Revision **13**, **November 17, 2009**, plus revisions

16.**9** Sample Control SOP 4.6, "Storing Samples"

16.**10** Department of Defense Quality Systems Manual for Environmental Laboratories, Version **4.1**, **4/22/09**

16.**11** "Test Methods for Evaluating Solid Waste, Physical/Chemical Methods," SW-846, 3rd Edition, Update IV, 2/07, Method 8082A, Revision 1

17.0 Attachments as Tables, Diagrams, Flowcharts & Validation Data

17.1 Attachment 1 – Method Reporting Limits

17.2 Attachment 2 – Instrument Maintenance Log

17.3 Attachment 3 – Instrument Run Log

17.4 Attachment 4 – Condition Codes

17.5 Attachment 5 – Manual Integration Codes

ORIGINAL MASTER COPY CONTROLLED COPY
If words above are not highlighted, this is an uncontrolled copy of this document.

Attachment 1

SW-846 Methods 8082 and 8082A Reporting Limits
(The reporting limit is at or above the lowest point in the calibration)

Aroclor	µg/L	µg/Kg
1016	0.50	24.0
1221	1.25	34.0
1232	0.93	17.0
1242	0.50	17.0
1248	0.50	17.0
1254	0.50	17.0
1260	0.50	17.0
1262	0.50	17.0
1268	0.50	17.0

ORIGINAL MASTER COPY CONTROLLED COPY
If words above are not highlighted, this is an uncontrolled copy of this document.

Attachment 2

CompuChem a division of Liberty Analytical Corp. Logbook 4 H(4) 1

GC Extractables Instrument Maintenance Log: 66/67

Date: _____ Time: _____

System: _____

Problem: _____

_____

_____

_____

_____

Action Taken: _____

_____

_____

_____

_____

_____

Parts used:

Part Number	Description	Quantity

File Name Indicating Instrument In Control: _____

Performed By: _____ Date: _____

Reviewed By: _____ Date: _____

2/11/00:mlj

Attachment 3

COMPUCHEM a Division of Liberty Analytical Corporation Instrument ID 86/87 File Path: _____ DATE ___/___/___
GC EXTRACTABLES RUN LOG
LOGBOOK 4N(5) 17 Method: 8081A 8081B 8082 8082A 8151A OLM04.3 OLC03.2 SOM01.2 Other _____ Amt. Inj. 2 µL (1 µL per column)

☐Changed septum ☐Changed liner ☐Baked column ☐Trimmed column

	REJECTED	FILE NUMBER	REPORTED	DATE	COMPUCHEM #	CASE/SDG#	STANDARD ID	CHEMIST	COMMENTS
1				/ /					
2				/ /					
3				/ /					
4				/ /					
5				/ /					
6				/ /					
7				/ /					
8				/ /					
9				/ /					
10				/ /					
11				/ /					
12				/ /					
13				/ /					
14				/ /					
15				/ /					
16				/ /					
17				/ /					
18				/ /					
19				/ /					
20				/ /					

The presence of the Chemist's/Analyst's employee ID number, or signature, on this run log attests that strict compliance with the method's SOP has occurred. Any SOP deviations require documentation by the responsible chemist/analyst together with the chemist's/analyst's initials and the initials of the lab supervisor and a QA department representative, signifying approval of the deviation.

Calibration ID: _____ Sequence ID: _____ Hexane Lot No_____

REVIEWED BY: _____ DATE _____

03/17/09: jr

Attachment 4

Code	Explaination
CS	Carry over Suspected from prior analysis
CT	Contamination verified
DI	Requires Dilution
DW	Diluition Wrong
JS	Reinjection same as prior run
LA	Lab Accident (explain in comments)
OT	Other (explain in coments)
OW	Original wrong for QC sample
RP	Reportable prior run
RT	Retention time shift
RU	Repeated Unnecessarily
SF	Spike recoveries failed (high or low)
SI	Spiked inadvertently
SH	Surrogate recoveries high
SL	Surrogate recoveries low
SM	Surrogate or spike missing
IF	Instrument failure
US	Unacceptable Standard (explain in comments)
VR	Verify results
NM	Did not match prior run or duplicate
RN	Reanalyze neat, was run at a dilution
PC	Poor chromatography
SC	Sulfur clean up required
WS	Wrong standard (SOM PCBs)
MI	Misinjection (bad injection)

Code	Explaination
%R	%RSD failed (Ical)
%B	Breakdown failed
%D	%D (CCV)
RT	Retention time shift
RU	Repeated Unnecessarily
IF	Instrument failure
US	Unacceptable Standard (explain in comments)
PC	Poor chromatography
SC	Sulfur clean up required
LA	Lab Accident (explain in comments)
OT	Other (explain in coments)

ORIGINAL MASTER COPY CONTROLLED COPY
If words above are not highlighted, this is an uncontrolled copy of this document.

Attachment 5

CompuChem
a division of Liberty Analytical Corporation

Notification Regarding Manual Editing/Integration Flags

In some instances, manual adjustments to the software output are necessary to provide accurate data. These manual integrations are performed by the data reviewers, GC/MS operators, or GC chemists. An Extracted Ion Current Profile (EICP) or a GC chromatographic peak has been provided for the manual integration performed on each compound to demonstrate the accuracy of that process. The manual integrations are flagged on the quantitation report in the far right column beyond the FINAL concentration for GC/MS analysis, and in the "Flags" column for GC analysis. The manual editing/integration flags are:

M - Denotes that a manual integration has been performed for this compound. The manual integration was performed in order to provide the most accurate area count possible for the peak.

H - Denotes that the data reviewer, GC/MS operator, or GC Chemist has chosen an alternate peak within the retention time window from that chosen by the software for that compound. No manual integration is performed in choosing an alternate peak. The software still performs the integration.

MH - Denotes that an alternate peak has been chosen within the retention time window from that chosen by the software for that compound and also a manual integration of the chosen peak has been performed. The manual integration was performed in order to provide the most accurate area count possible for the peak.

L - Denotes that a data reviewer or GC/MS operator has selected an alternate library search. This is typically done when an additional tentatively identified compound (TIC) has been added to the number of peaks searched. No manual integration is performed in choosing an alternate peak. The software still performs the integration.

ML - Denotes that an alternate library search has been selected and a manual integration has also been performed. This is typically done when an additional TIC has been added and the TIC peak also required a manual integration.

The EPA CLP SOW documents require additional explanations for manual editing/integration. In the accompanying raw data packages, additional codes have been applied to the "M" flag and carry the following meanings;

M1 - The compound was not found by the automatic integration routine.

M2 - The compound was incorrectly integrated by the automatic integration routine.

M3 - The co-eluting compounds were incorrectly integrated by the automatic integration routine.

These codes will appear in the GC/MS and GC raw data.

Revision 7 (12/6/2005)

ORIGINAL MASTER COPY CONTROLLED COPY
If words above are not highlighted, this is an uncontrolled copy of this document.

CompuChem
A Division Of
Liberty Analytical Corp.

501 Madison Avenue
Cary, NC 27513

NELAP accredited

SOP DOCUMENTATION FORM

This form must accompany all new and revised Standard Operating Procedures (SOPs) when you turn them in to Quality Assurance for review. Please fill out the entire block below (except effective date).

This is a new procedure _____ revised procedure ✓ outdated procedure (archive) _____

- Procedure Code: SPP-079A SOP Section #: 2.5.2.1 Revision #: 13

SOP Title: Preparation of Water Samples for the Analysis of Semivolatiles by SW-846 Method 3510C and EPA 625

Effective date: (QA fills in) 6/16/08

- Procedure prepared by: Valgena Pepaso Date: 6/14/08
- Procedure approved by: (If the manager prepared the SOP, a qualified second party should sign) [signature] Date: 6/16/08
- Reason for change: Periodic review and update
- This procedure meets the requirements of the following approved method references:

SW-846, 3rd Edition, Update III, 12/96 Method 3510C; CFR Title 40, Part 136, Method 625; EPA Memorandum, "~~Recommended~~ Recommended Approved Modifications to EPA Method 625, 11/06 VM 6/16/08

Procedure approved by a QA Representative (unless QA Representative signed above):

_____ Date: _____

On an annual basis: Lab managers are required to review lab practices and revise the SOP if necessary. If no revision is necessary, indicate by your signature that the SOP has been reviewed.

Annual Review—Signature: [signature] Date: 2/11/09

Annual Review—Signature: [signature] Date: 3/8/10

Annual Review—Signature: _____ Date: _____

Annual Review—Signature: _____ Date: _____

Sample Preparation Procedure -079A: Preparation of Water Samples for the Analysis of Semivolatiles by SW-846 **Method 3510C and EPA** 625

Table of Contents

SECTION	PAGE NO.
Section 1.0 – Scope and Application	2
Section 2.0 – Summary of Method	2
Section 3.0 – Definitions	2-3
Section 4.0 – Interferences	3
Section 5.0 – Safety	3-4
Section 6.0 – Equipment and Supplies	4-**5**
Section 7.0 – Reagents Standards	5-6
Section 8.0 - Sample Preservation and Storage	6
Section 9.0 – Quality Control	6-7
Section 10.0 – Calibration and Standardization	7
Section 11.0 – Procedure	7-11
Section 12.0 – Data Analysis and Calculations	11
Section 13.0 – Method Performance	11
Section 14.0 – Pollution Prevention	11-**12**
Section 15.0 – Waste Management	**12**
Section 16.0 – References	12-**13**
Section 17.0 – Attachments as Tables, Diagrams and Flowcharts	**13**
Attachment 1	**14**
Attachment 2	**15-17**
Attachment 3	**18**

ORIGINAL MASTER COPY CONTROLLED COPY
If words above are not highlighted, this is an uncontrolled copy of this document.

Sample Preparation Procedure -079A: Preparation of Water Samples for the Analysis of Semivolatiles by SW-846 **Method 3510C and EPA** 625

1.0 Scope and Application

This **Standard Operating Procedure (SOP) describes** the extraction of semivolatile organic compounds from water samples prior to GC/MS analysis.

Staff members performing the procedures described in this SOP are responsible for reading, understanding, and complying with the SOP requirements. Supervisors are responsible for directing the analyst to the controlled SOP, and providing adequate explanation of the material contained therein.

This procedure is restricted to use by or under the supervision of analysts experienced in the instrumentation or preparative methods and who have demonstrated the ability to generate acceptable results through QC samples and analyst capability studies. See the Quality Manual for demonstration of capability procedures.

2.0 Summary of Method

A 1-liter volume of sample is spiked with the semivolatile surrogate solution, and acid and base/neutral fractions are extracted by separatory funnel with methylene chloride. The extracts are dried, combined, concentrated, and submitted for GC/MS analysis. Alternatively, acid/neutral and base fractions may be generated separately.

3.0 Definitions

3.1 Method detection limit (MDL) – The minimum concentration of an analyte that can be measured and reported with 99% confidence that the analyte concentration is greater than zero and is determined from analysis of a sample in a given matrix containing the analyte (40 CFR, Part 136, Appendix B.)

3.2 Reporting Units – **µ**g/L

3.3 A Sample Delivery Group (SDG) is defined by the following, whichever is more frequent:

- each 20 field samples received within a case, or

- each 7 calendar day period during which field samples in a case are received (14 calendar days if requested by the client) beginning with the receipt of the first sample.

NOTE: The DOD-QSM and SC DHEC do not accept the SDG approach, unless the samples are prepared in a single batch. When a group of up to 20 field samples of a similar matrix are prepared as one batch, method-specified QC samples such as a method blank, laboratory control sample, matrix spike, matrix spike duplicate, and matrix duplicate must also be prepared together. If samples are batched together from different sites, project-specific QC must be processed.

3.4 SC DHEC – South Carolina Department of Health and Environmental Control

3.5 DOD-QSM – Department of Defense Quality Systems Manual

4.0 Interferences

4.1 Method interferences may be caused by contaminants in reagents, solvents, glassware, and other sample-processing hardware that lead to discrete artifacts or elevated baselines in the total ion current profiles (TICPs). All of these materials must be routinely demonstrated to be free of interferences under the conditions of the analysis by preparing and analyzing laboratory reagent blanks.

4.2 Matrix interferences may be caused by contaminants that were inadvertently co-extracted from the sample. The extent of matrix interferences will vary considerably from sample to sample. Matrix spike/matrix spike duplicate (MS/MSD) analyses will be done to determine the possible matrix interferences.

4.2.1 For sample extracts demonstrating matrix interferences, gel permeation cleanup procedure, Method 3640A, is an option.

5.0 Safety

5.1 Appropriate protective equipment and clothing must be used under the assumption that all samples are potentially hazardous. During sample preparation, safety glasses, gloves and lab coats are a minimum requirement. The persistent presence of noxious odors may be indicative of failure of the laboratory ventilation system and must be reported to a supervisor or manager.

5.2 Laboratory staff must review the Chemical Hygiene Plan for general safety policies, and Material Safety Data Sheets (MSDS) for solvents and reagents used in the laboratory. The MSDS are located in the Quality Assurance department.

ORIGINAL MASTER COPY CONTROLLED COPY
If words above are not highlighted, this is an uncontrolled copy of this document.

6.0 Equipment and Supplies

6.1 2-liter separatory funnels (glass or Teflon) with stopper (or screw cap) and stopcock

6.2 1-liter graduated cylinders or graduated glass jars

6.3 Erlenmeyer flasks

6.4 Powder funnels

6.5 Kuderna-Danish apparatus

6.5.1 Concentrator tubes**, 10-mL graduated, Kontes K570050-1025 or equivalent**

6.5.2 **Evaporative** flasks**, 500-mL, Kontes K-57001-0500 or equivalent**

6.5.3 Snyder column, three ball macro, Kontes K-503000-0121 or equivalent

6.5.4 Snyder column, two ball micro, Chemglass CC-0309-031-MS or equivalent

6.6 Glass stirring rods

6.7 Boiling chips (silicon carbide, furnaced at 800° C for 30 minutes)

6.8 Rubber bands

6.9 Nitrogen evaporation device (Organomation, or equivalent)

6.10 pH paper - wide range

6.11 Glass wool

6.11.1 Furnace at 400° C for 4 hours prior to use

6.12 Serological pipettes - 1.0-mL with 1/100 mL graduations

6.13 Amber 2-mL vial with a Teflon-lined screw cap

ORIGINAL MASTER COPY CONTROLLED COPY
If words above are not highlighted, this is an uncontrolled copy of this document.

7.0 Reagents and Standards

Prepare all standards used in this procedure in the Organic Standards Laboratory. Document the preparation of the standards used in this procedure in the Standards Preparation Logbook 22 F. All standards used in this procedure are prepared in optima grade methylene chloride. Standards are stored separate from samples at 4 ± 2°C in the reach in unit in the laboratory when not in use.

7.1 Reagent water – All water used in this procedure must be equivalent to ASTM Type II water (as it relates to specific conductance and specific resistance) which is demonstrated to meet the blank contamination acceptance criteria. It is referred to throughout the remainder of this SOP as reagent water.

7.2 Sodium hydroxide solution**,** 10 N

7.3 Sulfuric acid - concentrated

7.4 Solvents – pesticide residue analysis grade, or equivalent

7.4.1 Acetone

7.4.2 Methanol

7.4.3 Methylene chloride

7.5 Sodium sulfate (ACS) - powdered, anhydrous.

7.5.1 Purify by heating at 400° C for four hours in a shallow tray. Cool in a desiccator, and store in a glass bottle.

7.6 Surrogate Standard Solution #393

7.6.1 NSI Custom Mix Standard WL-371-C Base Neutral Acid Surrogates. See Attachment 1 for surrogate compounds and concentrations.

7.6.2 Add 0.5-mL of surrogate standard solution #393 to each 1000-mL sample aliquot.

7.7 LCS and Matrix Spiking Solutions

7.7.1 Validation Spike I (80-µg/mL) – Add 2.0-mL of NSI 8270 BNA Mix (1000-µg/mL) to methanol in a 25-mL volumetric flask. Dilute to volume with methanol. See Attachment 2 for a list of the compounds included.

7.7.2 Validation Spike II (80-µg/mL) – Add 1.0-mL of Restek Benzidines Mix I (2000-µg/mL) to methanol in a 25-mL volumetric flask. Dilute to volume with methanol. See Attachment 2 for a list of the compounds included.

8.0 Sample Preservation and Storage

8.1 Samples are preserved, and stored according to the tables in Sample Control SOPs 4.1, "Receiving Samples" and 4.6, "Storing Samples." Sample holding times are also listed.

8.2 Aqueous samples must be extracted within 7 days of sampling.

8.3 Samples are obtained from the Custodian out of cold storage. They should be allowed to come to room temperature prior to sample preparation. After preparation, they are returned to the Custodian and placed in the cooler.

9.0 Quality Control

9.1 Method Blank

9.1.1 A method blank is prepared with each extraction batch of up to 20 samples.

9.2 Laboratory Control Sample

9.2.1 A Laboratory Control Sample (LCS) must be prepared with each extraction batch of up to 20 samples.

9.3 Matrix Spike/Matrix Spike Duplicate

9.3.1 A matrix spike and matrix spike duplicate (MS/MSD) are prepared **with each batch of up to 20 samples.**

9.5 Contingency

9.5.1 If due to a lab accident or to QC failure a re-preparation is required for the sample and insufficient volume remains, the Project Manager must be alerted and will contact the client for direction on how to proceed.

ORIGINAL MASTER COPY CONTROLLED COPY
If words above are not highlighted, this is an uncontrolled copy of this document.

9.5.2 If persistent contamination occurs in the laboratory, analyses must be halted until the source can be identified and isolated. When the contamination issue is resolved, sample analyses may proceed.

9.5.3 Any other issues that potentially affect data quality should be addressed with the Project Manager.

10.0 Calibration and Standardization

N/A

11.0 Procedure

Documentation must follow the requirements in Quality Control SOP 13.6, "Proper Documentation Procedures".

11.1 Preparation of Equipment

11.1.1 Cover all work areas with plastic-backed, absorbent table covering, with the plastic side down.

11.1.2 Assemble the following glassware for each sample to be processed:

11.1.2.1 2-liter glass or Teflon separatory funnel with stopper (or screw-cap) and stopcock

11.1.2.2 1-liter graduated cylinder or graduated glass jar

11.1.2.3 Erlenmeyer flask

11.1.2.4 **Powder** funnel

11.1.2.5 Kuderna-Danish apparatus

11.1.2.6 **Glass** stirring rod

11.1.3 Rinse each of the items listed above with methylene chloride. Empty the methylene chloride into a solvent waste container.

11.1.4 Add a small plug of furnaced glass wool to each powder funnel**;** add 1-2 inches of prepared sodium sulfate to each funnel.

11.1.5 Label each piece of glassware with the sample number.

11.2 Sample Preparation and Extraction

11.2.1 Allow the sample to equilibrate to room temperature. Shake the sample container to mix the sample.

11.2.2 Using a 1 liter graduated cylinder or jar, measure 1 liter (nominal) of sample. Record the initial volume on the worksheet. (Attachment 3)

11.2.3 Pour the sample into its **appropriately labeled** separatory funnel.

11.2.4 Use 5 to 10-mL of methylene chloride to rinse the graduated cylinder or jar used to measure the sample. Add the rinse to the separatory funnel.

11.2.4.1 If the entire contents of the sample container are used, use 5 to 10-mL of methylene chloride to rinse the sample container. Add the rinse to the separatory funnel.

11.2.5 Add 0.5-mL of surrogate standard #393 to each field sample using the serological pipet. It is important to add exactly 0.5-mL, since surrogate recoveries are used to judge the efficiency of the extraction.

11.2.6 Prepare a method blank by adding 0.5-mL of surrogate standard #393 to 1000-mL of reagent water.

11.2.7 Prepare the LCS by adding 0.5-mL each of Validation Spike I, Validation Spike II, and surrogate standard #393 to 1000-mL of reagent water.

11.2.8 Prepare the MS/MSD by adding 0.5-mL each of Validation Spike I, Validation Spike II, and surrogate standard #393 to 1000-mL aliquots of the designated field sample.

11.2.9 Record the standard ID numbers, the lot numbers, and volume added on the extraction worksheet for all of the standards used in this procedure.

11.2.10 Slowly add approximately 0.5-mL of concentrated sulfuric acid to each separatory funnel using a serological pipet. Stopper the separatory funnel and shake for 20-30 seconds to mix, venting the stopcock several times.

11.2.11 Check the pH by inserting a disposable pipette into the sample and touching the pipette to a piece of wide range pH paper. If the pH is 2 or

less, note the pH on the extraction worksheet. If the pH is > 2, continue to add acid 1-mL at a time, mixing between additions, until the pH has reached 2 or less. The sample is now ready for the acid-neutral extraction.

11.2.12 **Add 60-mL of methylene chloride to the separatory funnel.** Stopper each funnel and shake vigorously for 2 minutes. Be careful to vent the stopcock frequently under the hood, until the pressure equalizes.

11.2.13 Allow each separatory funnel to hang undisturbed for approximately 10 minutes, to allow the layers to separate. If an emulsion larger than two-thirds the size of the bottom layer (methylene chloride) forms, steps must be taken to break it up. Emulsions may be broken by stirring, passing through the stopcock very slowly, or by centrifugation. The method used is determined by the severity of the emulsion.

11.2.13.1 To break an emulsion using centrifugation, drain the emulsion into a centrifuge bottle. Place the bottle in the centrifuge. (Always use a bottle with approximately the sample volume of methylene chloride as a counter-weight, if only one sample is being centrifuged). Secure the lid of the centrifuge and start. Let the sample(s) spin for 2 minutes at 2000 RPM and turn off the centrifuge. Once the sample(s) have stopped spinning, remove the bottles. Pour the sample extract back into the appropriate separatory funnel. Rinse the bottle with 5 to 10-mL of methylene chloride and pour the rinse into the separatory funnel.

11.2.14 When two distinct layers are obtained, drain the lower layer (methylene chloride) through a powder funnel containing glasswool and sodium sulfate into the Erlenmeyer flask. Close the stopcock when the water layer reaches the stopcock. The object is to collect all of the methylene chloride and none of the water.

11.2.15 **Add 60-mL of methylene chloride to the separatory funnel.** Repeat the steps in sections **11.2.12** through **11.2.14** two more times.

11.2.16 Slowly add approximately 0.5-mL of 10 N sodium hydroxide to each separatory funnel. Stopper the separatory funnel and shake for 20-30 seconds, venting the stopcock under the hood several times.

11.12.17 Check the pH by inserting a disposable pipette into the sample and touching the pipette to a piece of wide range pH paper. If the pH is now

11 or greater, note the pH on the extraction worksheet. If the pH is not 11 or greater, continue to add 1-mL volumes of sodium hydroxide. Shake and measure the pH until a value of 11 or greater is reached.

11.2.18 **Add 60-mL of methylene chloride to the separatory funnel.** Repeat the steps **in** sections **11.2.12** through **11.2.14** two more times.

11.2.19 Pour the combined acid-neutral and base extracts from the Erlenmeyer flask into the K-D flask and transfer the sample label.

11.3 Extract Concentration

11.3.1 Add 2-3 boiling chips to each K-D flask and attach a Snyder column. **A**dd 1-2-mL of methylene chloride to the top of the Snyder column.

11.3.2 Place the K-D apparatus on a water bath set at 85-95° C. Adjust the vertical position of the apparatus and water temperature as required to concentrate the extract in 15-30 minutes.

11.3.3 Remove each K-D flask from the bath as soon as an apparent volume of 4-mL is reached and allow it to drain.

11.4 Final Extract Concentration

11.5.1 Remove the Snyder column and evaporation flask from the concentrator tube.

11.5.2 Place a 2-ball micro Snyder column on the concentration tube. Wet the micro column by placing approximately 1-mL of methylene chloride into the top of the column.

11.5.2.1 Hold the concentrator tube over the hot bath and concentrate the extract to an apparent volume of 0.5-mL.

11.5.2.2 Remove concentrator tube from the bath and allow it to cool and drain.

11.5.3 Alternately, place the concentrator tube containing the extract into the nitrogen concentration device.

11.5.3.1 Using a clean, dry stream of nitrogen, concentrate the extract to approximately 0.5-mL.

11.5.4 **Quantitatively t**ransfer the entire extract volume with a transfer **pipette** to an amber, 2-mL autosampler vial. **Rinse the concentrator tube with approximately 0.5-mL of methylene chloride and add the rinse to the sample vial. Adjust the final extract volume to 1.0-mL and mark the extract volume on the vial with a permanent marker.**

11.5.5 Label the vial **with** CompuChem number, **preparation code (-079A),** and extraction date. At the time of transfer, note the final volume on the Extraction worksheet.

11.5.6 Complete the paperwork**. Record the lot numbers for all reagents used in this procedure on the extraction worksheet. Give the completed worksheet to the supervisor or his/her designee for review and signature.**

11.5.7 **Deliver the sample extracts and copies of the completed worksheets** to the **semivolatile** GC/MS **lab** for analysis.

12.0 Data Analysis and Calculations

N/A

13.0 Method Performance

This method was validated through in-house laboratory studies of method detection limits and precision and accuracy for single analyst. The data are retained by the QA department.

14.0 Pollution Prevention

The solvents used in this procedure pose little threat to the environment when recycled and managed properly. Pollution prevention encompasses any technique that reduces or eliminates the quantity or toxicity of waste at the point of generation. Numerous opportunities for pollution prevention exist in laboratory operation. The EPA has established a preferred hierarchy of environmental management techniques that places pollution prevention as the management option of first choice. Whenever feasible, laboratory personnel should use pollution prevention techniques to address their waste generation. When wastes cannot be feasibly reduced at the source, the Agency recommends recycling as the next best thing. See SOP 12.1, “Hazardous Waste Disposal”, regarding laboratory procedures for recycling solvent waste streams.

15.0 Waste Management

It is the laboratory's responsibility to comply with all federal, state, and local regulations governing waste management, particularly the hazardous waste identification rules and land disposal restrictions, and to protect the air, water, and land by minimizing and controlling all releases from fume hoods and bench operations. Compliance with all sewage discharge permits and regulations is also required.

Samples preserved with HCl, HNO_3, or H_2SO_4 to pH <2 are hazardous and must be handled as hazardous waste.

Refer to the Hazardous Waste Management and Safety SOPs located in the lab.

16.0 References

16.1 Test Methods for Evaluating Solid Waste, Physical/Chemical Methods, SW-846, 3rd Edition, 12/96, Methods 3510C and 8270C

16.2 CFR Title 40, Part 136, "Guidelines for Establishing Test Procedures for Priority Pollutants", Method 625.

16.3 EPA Memorandum, "Recommended Approved Modifications to EPA Method 625", November 1, 2006.

16.4 Standard Methods for the Examination of Water and Wastewater, 20th (1998) Edition, Method 1080

16.5 Quality Control SOP 13.6, "Proper Documentation Procedures"

16.6 NELAC Standards, approved June, 2003

16.7 QA/G6: Guidance for **Preparing** Standard Operating Procedures **(SOPs)** EPA/600/**B-07**/**001**, **April 2007**.

16.8 CompuChem Quality Manual, Revision **10**, **February 19, 2008**

16.9 Sample Control SOP 4.6, "Storing Samples"

17.0 Attachments as Tables, Diagrams and Flowcharts

17.1 Attachment 1 – A Certificate of Analysis for BNA Surrogates

17.2 Attachment 2 - Certificates of Analysis for the Validation Spike Solutions

17.3 Attachment 3 – Extraction Worksheet

Attachment 1

Certificate of Analysis

NSI Solutions, Inc. *7517 Precision Drive, Suite 101* Raleigh, NC 27617 * 1-800-234-7837

Mixture Name: BNA Surrogates (SW 846)
Catalog Number: WL-371-C
Lot Number: 122706-33

Expiration Date: 12/07
Solvent: Methanol
(FLAMMABLE, IRRITANT)

COMPOUND NUMBER	ANALYTE	PURITY (%)	GRAVIMETRIC CONCENTRATION (ug/mL)
W-0193-10	2-Fluorophenol	99.8	200.0
W-0531-26	Phenol-d5	99.3	200.0
W-0875-05	2,4,6-Tribromophenol	99.8	200.0
W-0194-19	2-Fluorobiphenyl	98.1	100.0
W-0168-15	Nitrobenzene-d5	99.8	100.0
W-0909-21	p-Terphenyl-d14	99.9	100.0
	Allura Red Dye		

PREPARATION: Reported concentration value has been corrected for purity. Concentration is calculated from wt/vol or vol/vol measurements using microbalances calibrated with NIST traceable weights and or ASTM Class A volumetric glassware or calibrated equivalent labware.

STORAGE & HANDLING: Store at ≤ 5° C. Allow to equilibrate to room temperature before use.

Kristi Bright, Organic Chemist

Attachment 2

Certificate of Analysis

NSI Solutions, Inc. * 7517 Precision Dr. Ste.101 * Raleigh, NC 27617 * 1-800-234-7837

Mixture Name: 8270 BNA Mix
Mixture Number: C-701-06

Expiration Date: 02/07
Solvent: Methylene chloride/Benzene
(CARCINOGEN, IRRITANT)

COMPOUND NUMBER	ANALYTE	PURITY (%)	GRAVIMETRIC CONCENTRATION (ug/mL)
W-0001-04	Acenaphthene	99.9	1000
W-0075-17	Acenaphthylene	99.5	1000
W-0076-05	Anthracene	99.5	1000
W-0070-03	Benzo(a)anthracene	99.7	1000
W-0071-13	Benzo(a)pyrene	99.6	1000
W-0072-13	Benzo(b)fluoranthene	99.2	1000
W-0073-12	Benzo(k)fluoranthene	99.0	1000
W-0077-11	Benzo(g,h,i)perylene	99.8	1000
W-0074-10	Chrysene	99.2	1000
W-0231-15	Dibenz(a,h)anthracene	99.3	1000
W-0067-04	Fluoranthene	98.8	1000
W-0078-04	Fluorene	98.2	1000
W-0081-17	Indeno(1,2,3-c,d)pyrene	99.8	1000
W-0053-04	Naphthalene	99.0	1000
W-0079-05	Phenanthrene	99.4	1000
W-0092-07	Pyrene	98.4	1000
W-0039-04	4-Bromophenyl phenyl ether	98.9	1002
W-0085-03	Butyl benzyl phthalate	96.3	1000
W-0041-09	bis(2-Chloroethoxy)methane	99.5	999
W-0016-05	bis(2-Chloroethyl)ether	99.9	999
W-0040-17	bis(2-Chloroisopropyl)ether	97.5	1001
W-0038-19	4-Chlorophenyl phenyl ether	99.8	1000
W-0068-05	Diethyl phthalate	98.5	1002
W-0069-04	Dimethyl phthalate	99.6	1000
W-0090-04	Di-n-butyl phthalate	99.9	1001
W-0087-07	Di-n-octyl phthalate	98.5	1026
W-0064-05	bis(2-Ethylhexyl)phthalate	98.0	996
W-0059-05	N-Nitrosodimethylamine	99.8	1001
W-0061-09	N-Nitrosodi-n-propylamine	99.6	1000
W-0283-06	Diphenylamine	99.5	1007
W-1211-03	bis(2-Ethylhexyl)adipate	99.6	1023
W-0542-03	Aniline	99.8	1000
W-1259-01	Azobenzene	98.6	1000
W-0422-05	Carbazole	99.6	1000
W-0305-04	4-Chloroaniline	99.9	1000
W-0324-03	o-Nitroaniline	99.9	1000
W-0325-03	m-Nitroaniline	99.7	1000
W-0342-02	p-Nitroaniline	99.9	1000
W-0326-07	Benzyl alcohol	99.8	1000
W-0018-05	2-Chloronaphthalene	99.9	1000
W-0261-04	Dibenzofuran	99.5	1000
W-0023-03	1,2-Dichlorobenzene	99.1	1011
W-0214-05	1,3-Dichlorobenzene	99.0	1000
W-0025-07	1,4-Dichlorobenzene	99.9	1000

Attachment 2 (continued)

Certificate of Analysis

NSI Solutions, Inc. * 7517 Precision Dr. Ste.101 * Raleigh, NC 27617 * 1-800-234-7837

COMPOUND NUMBER	ANALYTE	PURITY (%)	GRAVIMETRIC CONCENTRATION (ug/mL)
W-0033-05	2,4-Dinitrotoluene	98.7	1000
W-0034-06	2,6-Dinitrotoluene	98.0	1000
W-0008-04	Hexachlorobenzene	99.9	1000
W-0050-05	Hexachlorobutadiene	98.3	1000
W-0051-08	Hexachlorocyclopentadiene	98.0	1001
W-0011-04	Hexachloroethane	99.5	1000
W-0052-04	Isophorone	97.9	1000
W-0592-03	2-Methylnaphthalene	99.0	1000
W-0094-04	Nitrobenzene	99.9	1000
W-0007-02	1,2,4-Trichlorobenzene	99.9	1000
W-0090-05	4-Chloro-3-methylphenol	99.8	1001
W-0022-08	2-Chlorophenol	99.3	1000
W-0250-03	o-Cresol	99.4	1001
W-0251-03	m-Cresol	99.8	499
W-0252-03	p-Cresol	99.9	522
W-0029-07	2,4-Dichlorophenol	99.4	1006
W-0224-07	2,4-Dimethylphenol	99.6	1000
W-0058-04	4,6-Dinitro-2-methylphenol	87.0	996
W-0057-07	2,4-Dinitrophenol	77.4	997
W-0055-04	2-Nitrophenol	99.8	1037
W-0056-05	4-Nitrophenol	99.8	999
W-0062-09	Pentachlorophenol	99.9	1003
W-0063-05	Phenol	99.8	1027
W-0179-07	2,4,5-Trichlorophenol	99.8	998
W-0019-08	2,4,6-Trichlorophenol	99.8	1000
W-0498-08	2,3,4,6-Tetrachlorophenol	95.1	999
W-0552-03	2,3,5,6-Tetrachlorphenol	99.0	999
W-0271-05	Pyridine	99.5	1001
W-1483-01	1,2-Dinitrobenzene	99.0	999
W-0527-03	1,3-Dinitrobenzene	98.5	997
W-1484-01	1,4-Dinitrobenzene	98.0	997
W-1958-01	1-Methylnaphthalene	99.1	1001

PREPARATION: Reported concentration value has been corrected for purity using purity values obtained by NSI analysis. Concentration is calculated from wt/vol or vol/vol measurements using microbalances calibrated with NIST traceable weights to 0.0001 g and or ASTM Class A volumetric glassware or calibrated equivalent labware.

STORAGE & HANDLING: Store in freezer. Allow equilibration to room temperature before use. Mild sonication may be necessary to dissolve any precipitate.

Mike Birckhead, Technical Manager

Attachment 2 (continued)

RESTEK

Certificate of Analysis

110 Benner Circle
Bellefonte, PA 16823-8812
Tel: (800)356-1688
Fax: (814)353-1309

FOR LABORATORY USE ONLY-READ MSDS PRIOR TO USE.

Catalog No.: 31862 Lot No.: A048875

Description: 8270 Benzidines Mix #2

Expiration Date[1]: January 2015 Storage: Refrigerate

Elution Order	Compound	CAS #	Percent Purity[2]	Concentration (weight/volume)[3]	Percent Uncertainty[4]
1	Benzidine	92-87-5	99%	2,000.00 ug/ml	+/-0.10 %
2	3,3'-Dimethylbenzidine (o-tolidine)	119-93-7	99%	2,000.00 ug/ml	+/-0.10 %
3	3,3'-Dichlorobenzidine	91-94-1	99%	2,000.00 ug/ml	+/-0.10 %
Solvent:	Methylene Chloride (MEOH FREE)	75-09-2	99%		

Column: 30m x .25mm x .5um Rtx-5 (cat.#10238)
Carrier Gas: hydrogen @ 40 cm./sec.
Temp. Program: 100°C to 330°C @ 20°C/min.
Inj. Temp: 250°C
Det. Temp: 300°C
Det. Type: FID

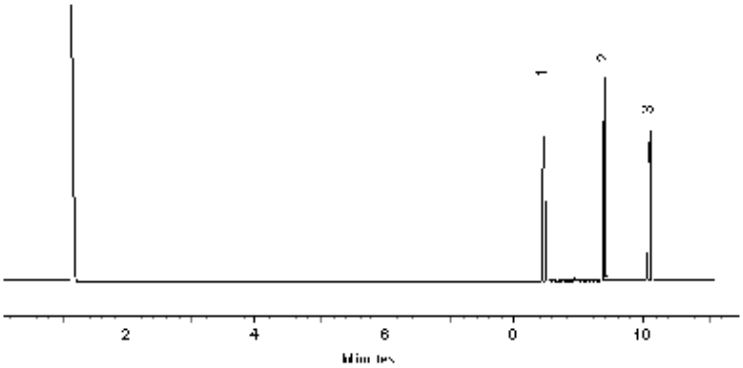

Gera Eyster / QA Analyst

Balance 1113372841

1 Expiration date of the unopened ampul stored at recommended temperature.
2 Purity was determined by one or more of the following techniques: GC/FID, HPLC, GC/ECD, GC/MS. Value rounded to the nearest 100/0 or whole percentage. In addition to detectors listed above, chemical identity and purity are confirmed using one or more of the following: NMR, DSC, acid probe MS, GC/FPD, GC/NPD, GC/TCD, FTIR, melting point, refractive index and Karl Fisher. See data page or contact Restek for further details.
3 Based upon gravimetric preparation with balance calibration verification using NIST traceable weights (seven mass levels).
4 Percent Uncertainty based upon balance AND ASTM Class A volumetric glassware accuracy.

ISO 9001 REGISTERED

Manufactured under Restek ISO 9001 Registered Quality System Certificate #-14001-07

Attachment 3

CompuChem
EXTRACTION WORKSHEET
SEMI-VOLATILE WATER
Method 3510C for 8270C or 625

ASSIGNED TO: _____ DATE EXTRACTED/POSTED: _____

EMP ID NUMBER: _____ BATCH NO.: _____

-079A

	COMPUCHEM NUMBER	CLIENT SAMPLE ID	QC SAMPLE TYPE	SAMPLE VOLUME (mL)	FINAL VOLUME (mL)	Adjusted pH A/N	Adjusted pH BASE	COMMENTS
1								
2								
3								
4								
5								
6								
7								
8								
9								
10								
11								
12								
13								
14								
15								
16								
17								
18								
19								
20								
21								
22								
23								
24								
25								
26								

		S-VOL	8270 or 625
SURROGATE	NO.	393	
	AMT.	0.5 mL	
	LOT		
SPIKE	NO.		VALID.
	AMT.		0.5 mL
	LOT		

FINAL VOLUME VERIFIED: _____

SUPERVISOR REVIEWED: _____

SURROGATE & SPIKE ADDED BY: _____/_____
Initials Date

Analyst initials. Extracted _____ KD _____ N2 _____ Bottle up _____

Witness _____/_____
Initials Date

Manufacturer and lot number of reagents/solvents used _____

REV. 5/25/07: VR

CompuChem
A Division Of
Liberty Analytical Corp.

501 Madison Avenue
Cary, NC 27513

NELAP accredited

SOP DOCUMENTATION FORM

This form must accompany all new and revised Standard Operating Procedures (SOPs) when you turn them in to Quality Assurance for review. Please fill out the entire block below (except effective date).

This is a new procedure _____ revised procedure ✓ outdated procedure (archive) _____

- Procedure Code: SPP-176 SOP Section #: 2.5.2.3 Revision #: 13

SOP Title: Preparation of Soil/Sediment/Sludge Samples by SW-846 Method 3550B and Method 3550C for the Analysis of Low-Level Semivolatiles

Effective date: (QA fills in) 10-14-09

- Procedure prepared by: [signature] Date: 10-13-2009
- Procedure approved by: (If the manager prepared the SOP, a qualified second party should sign) [signature] Date: 10-13-09
- Reason for change: Added LCS/MS/MSD standard composition information
- This procedure meets the requirements of the following approved method references: SW-846, 3rd Edition, Update III, Method 3550B and Method 8270C, 12/96 and Update IV, Method 3550C and Method 8270D, 02/07

Procedure approved by a QA Representative (unless QA Representative signed above):

_____ Date: _____

On an annual basis: Lab managers are required to review lab practices and revise the SOP if necessary. If no revision is necessary, indicate by your signature that the SOP has been reviewed.

Annual Review—Signature: _____ Date: _____

Annual Review—Signature: _____ Date: _____

Annual Review—Signature: _____ Date: _____

Annual Review—Signature: _____ Date: _____

Sample Preparation Procedure -176: Preparation of Soil/Sediment/Sludge Samples **by SW-846 Method 3550B and Method 3550C** for the Analysis of Low-Level Semivolatiles

Table of Contents

SECTION	PAGE NO.
Section 1.0 – Scope and Application	2
Section 2.0 – Summary of Method	2
Section 3.0 – Definitions	2-3
Section 4.0 – Interferences	3-4
Section 5.0 – Safety	4
Section 6.0 – Equipment and Supplies	4-5
Section 7.0 – Reagents and Standards	5-6
Section 8.0 - Sample Preservation and Storage	6
Section 9.0 – Quality Control	6-7
Section 10.0 – Calibration and Standardization	7
Section 11.0 – Procedure	7-**10**
Section 12.0 – Data Analysis and Calculations	10
Section 13.0 – Method Performance	10
Section 14.0 – Pollution Prevention	10
Section 15.0 – Waste Management	10-**11**
Section 16.0 – References	11
Section 17.0 – Attachments as Tables, Diagrams and Flowcharts	1**2**
Attachment 1	1**3**
Attachment 2	**14**
Attachment 3	**15-17**
Attachment 4	**18**

1.0 Scope and Application

This procedure is used to determine the concentration of semivolatile organic compounds in solid samples following the procedure in SW-846 (Methods 3550B and 3550C).

Staff members performing the procedures described in this SOP are responsible for reading, understanding, and complying with the SOP requirements. Supervisors are responsible for directing the analyst to the controlled SOP, and providing adequate explanation of the material contained therein.

This procedure is restricted to use by or under the supervision of analysts experienced in the instrumentation or preparative methods and who have demonstrated the ability to generate acceptable results through QC samples and analyst capability studies.

2.0 Summary of Method

A 30-gram aliquot of sample is mixed with anhydrous sodium sulfate to form a free-flowing powder. This is solvent extracted three times using sonication. The extract is separated from the sample by Buchner funnel filtration. The sample is concentrated for analysis by GC/MS. Optional extract cleanup procedures may be employed.

This procedure encompasses both EPA Methods 3550B and 3550C. All samples for SC DHEC must be processed under EPA 3550C. This SOP is NOT for use with Ohio VAP projects. Please see Ohio VAP specific SOP.

3.0 Definitions

3.1 Method detection limit (MDL) – The minimum concentration of an analyte that can be measured and reported with 99% confidence that the analyte concentration is greater than zero and is determined from analysis of a sample in a given matrix containing the analyte (40 CFR, Part 136, Appendix B.)

3.2 Reporting Limit – The laboratory reporting limit is based on the lowest multipoint calibration standard concentration. For organic methods, values detected below the reporting limit and above the MDL may be reported and qualified as an estimated concentration.

If the low level standard concentration is not at least three times higher than the MDL value, the standard concentration is adjusted upward in order to achieve this minimal ratio. It may be adjusted higher than three times depending on the concentration range of the calibration curve and the ability to meet method linearity requirements.

The reporting limit for CLP is the Contract Required Quantitation Limit (CRQL) for organics.

3.3 Reporting Units – µg/Kg

3.4 An SDG is defined by the following, whichever is more frequent:

- each 20 field samples received within a case, or
- each 7 calendar day period during which field samples in a case are received (14 calendar days if requested by the client) beginning with the receipt of the first sample.

NOTE: The **DoD**-QSM and SC DHEC do not accept the SDG approach, unless the samples are prepared in a single batch. When a group of up to 20 field samples of a similar matrix are prepared as one batch, method-specified QC samples such as a method blank, laboratory control sample, matrix spike, matrix spike duplicate, and matrix duplicate must also be prepared together at a rate of 5%. If samples are batched together from different sites, project-specific QC must be processed.

3.5 SC DHEC – South Carolina Department of Health and Environmental Control

3.6 **DoD**-QSM – Department of Defense-Quality Systems Manual

4.0 Interferences

4.1 Method interferences may be caused by contaminants in reagents, solvents, glassware, and other sample-processing hardware that lead to discrete artifacts or elevated baselines in the total ion current profiles (TICPs). All of these materials must be routinely demonstrated to be free of interferences under the conditions of the analysis by preparing and analyzing laboratory reagent blanks.

4.2 Matrix interferences may be caused by contaminants that were inadvertently coextracted from the sample. The extent of matrix interferences will vary

considerably from sample to sample. Matrix spike/matrix spike duplicate (MS/MSD) analyses will be done to determine the possible matrix interferences.

5.0 Safety

5.1 The degree of toxicity or carcinogenicity of the chemicals used in this method has not been determined. Each chemical should be treated as a potential health hazard, and exposure to these chemicals should be minimized. Each analyst is responsible for ensuring staff awareness of Occupational Safety and Health Administration (OSHA) regulations regarding safe handling of chemicals used in this method. Additional material on laboratory safety is available for the analyst.

5.2 The following parameters covered by this method have been tentatively classified as known or suspected, human or mammalian carcinogens:

- benzo(a)anthracene
- benzidine
- 3,3′-dichlorobenzidine
- benzo(a)pyrene
- dibenz**o**(a,h)anthracene
- N-nitrosodimethylamine

5.3 Appropriate protective equipment and clothing must be used under the assumption that all samples are potentially hazardous. During sample preparation, safety glasses, gloves and lab coats are a minimum requirement. The persistent presence of noxious odors may be indicative of failure of the laboratory ventilation system and must be reported to a supervisor or manager.

5.4 Laboratory staff members are required to review the Chemical Hygiene Plan for general safety policies, and Material Safety Data Sheets (MSDS) for solvents and reagents used in the laboratory. The MSDS are located in the Quality Assurance department.

6.0 Equipment and Supplies

6.1 Ultrasonic Disrupter, having a minimum power wattage of 300 watts, with pulsing capability. Use a 3/4 “horn.”

6.2 Sonabox, to be used with disruptor for decreasing cavitation sound.

6.3 Disposable, graduated, transfer pipets- 0.5 mL, 1.0 mL.

6.4 Teflon® beakers – 250-mL.

6.5 Powder Funnel, 10 cm. diameter with Whatman No. 41 filter paper, or Buchner funnel, or equivalent.

6.6 Kuderna-Danish (K-D) apparatus.

6.6.1 Concentration tube- 10 mL, graduated.

6.6.2 Evaporation flask- 500 mL, attached to concentrator tube with springs or clamps.

6.6.3 Snyder column- three ball macro.

6.7 Boiling chips- solvent extracted (silicon carbide or equivalent).

6.8 Water bath- Heated, capable of temperature control (± 5°C)

6.9 Balance- Platform, capable of weighing to nearest 0.01 g.

6.10 Nitrogen blow-down apparatus-Organomation or equivalent.

6.11 Vials- 2 mL, with screw-top, Teflon-lined septa.

6.12 Spatula- Puritan, Standard Tongue Depressors

7.0 Reagents and Standards

Note: All spiking standard information is entered into the LIMS. To obtain information on any standard, access Element, click on "Laboratory," and scroll down and access "Standards." Standards can be sorted by Department. Select the standard you would like to access. The view will show lot number, prepared dates, solvent, vendor, composition, and concentration.

All standards are prepared in the Organic Standards Laboratory. Standards are stored separately from samples at 2-6 ^{o}C in the laboratory when not in use.

7.1 Reagent water – All water used in this procedure must be equivalent to ASTM Type I water (as it relates to specific conductance and specific resistance) which is demonstrated to meet the blank contamination acceptance criteria contained in this Standard Operating Procedure (SOP). It is referred to throughout the remainder of this SOP as DI water.

7.2 Methylene chloride - Fisher, pesticide-grade, methylene chloride is used for this analysis.

7.3 Acetone - pesticide-grade

7.4 Use methylene chloride and acetone to make a 50/50 solution.

7.5 Sodium sulfate - Use only sodium sulfate labeled "FURNACED SODIUM SULFATE." Furnace the sodium sulfate in a shallow tray prior to use for at least four hour in a 400° C oven.

7.6 Surrogate and Spikes

7.6.1 Semivolatile surrogate solution #393 **- prepared by vendor (Attachment 2)**

7.6.2 8270 **Validation Spike I (Attachment 3)**

7.6.3 8270 Validation Spike II (Attachment 4)

8.0 Sample Preservation and Storage

8.1 Samples are preserved and stored according to the tables in Sample Control SOPs 4.1, "Receiving Samples" and 4.6, "Storing Samples." Sample holding times are also listed.

8.2 All extracts must be extracted within 14 days of collection.

8.3 Prior to analysis, all extracts must be stored under refrigeration at 2-6 °C**.** To meet the requirements of the **DoD**-QSM and the Ohio VAP, extracts must be stored in the freezer at -10 ^{o}C in the laboratory. After analysis, extracts are returned to Sample Control for long-term storage and disposal.

9.0 Quality Control

9.1 Method Blank

9.1.1 A method blank must be prepared with each extraction batch of up to 20 samples.

9.2 Laboratory Control Sample

9.2.1 A laboratory control sample (LCS, or blank spike, BS,) must be prepared with each extraction batch of up to 20 samples.

9.3 Matrix Spike/Matrix Spike Duplicate

9.3.1 A matrix spike and matrix spike duplicate (MS/MSD) are prepared for every sample delivery group (SDG)/ extraction batch.

9.4 Contingency

9.4.1 If due to a lab accident or to QC failure a re-preparation is required for the sample and insufficient volume remains, the Project Manager must be alerted and will contact the client for direction on how to proceed.

9.4.2 If persistent contamination occurs in the laboratory, analyses must be halted until the source can be identified and isolated. When the contamination issue is resolved, sample analyses may proceed.

9.4.3 Any other issues that potentially affect data quality should be addressed with the Project Manager.

10.0 Calibration and Standardization

10.1 Ensure the balance has been calibrated for the day prior to its use following the Quality Control SOP 13.16, "Top Loading Balance Calibration & Maintenance."

11.0 Procedure

Documentation must follow the requirements in QC SOP: Proper Documentation Procedures. The sample preparation technician must complete the extraction worksheet (Attachment 1). Any unused portions must be z'ed out. The laboratory supervisor reviews the completed worksheet for accuracy and completeness and then signs it. The worksheet accompanies the sample to the analytical laboratory. Include on the worksheet the manufacturer and lot number of the reagents/solvents used.

11.1 Preparation of Equipment

11.1.1 Rinse each of the items listed above with methylene chloride. Empty the methylene chloride into a waste container and repeat the process two more times. If the glassware selected for use is wet, it must be rinsed with methanol before the methylene chloride rinses.

11.1.2 Label each piece of glassware with the sample number it is to be used for and the preparation procedure (in this case -176). Use orange labels.

11.2 Sample Preparation and Extraction

11.2.1 Decant and discard any water layer on a sediment sample. Mix thoroughly to achieve homogeneity. Discard any foreign objects such as sticks, stones, and leaves. Samples should be at room temperature. Place a 250 mL Teflon® beaker on the platform balance and press the tare button. This will automatically subtract the weight of the beaker. Using a spatula, weigh 30.0 g (± 0.5 g) of the sample in the beaker and record the exact weight of the sample to one decimal place on the extraction worksheet (Attachment 1).

11.2.2 Two additional 30 g portions from a designated sample are transferred to separate beakers for the matrix spike and matrix spike duplicate.

11.2.3 For the blank and LCS, weigh 90.0 g of sodium sulfate.

11.2.4 Add 60 g of furnaced sodium sulfate to each sample. Mix thoroughly to form a free-flowing powder.

11.2.5 Add 0.5 ml of surrogate standard #393 to each field and QC sample with a 0.5 mL or 1.0 mL graduated pipet. Record the surrogate standard ID number, the lot number, and volume added on the extraction worksheet.

11.2.5.1 Note: For Method 3550C, the surrogate spike and validation spike**s** (for the LCS and MS/MSD) are added prior to the addition of the sodium sulfate.

11.2.6 Add 0.5 ml each of the 8270 validation spike standard**s (8270 Validation Spike I and II)** to the MS/MSD and LCS. Record the standard ID numbers, the lot numbers, and volume added on the extraction worksheet.

11.2.7 Add 100 ml 1:1 methylene chloride/acetone to each sample and sonicate for three minutes using a 3/4-inch horn. (100% power output with 50% duty cycle and 1-second pulse**; please reference SOP 8.2 for Sonication Procedure**) Place the bottom of the horn about 1/2 an inch below the surface of the solvent, but above the sediment layer. Rinse the probe end in the beaker with a small amount of the 1:1 mixture. As each sample finishes sonication, decant into a **Buchner** funnel

containing Whatman 41 filter paper. Use vacuum filtration and collect the extract in a sidearm flask.

11.2.11 Repeat steps 11.2.7 two more times.

11.2.12 After completion of the third extraction, pour the entire sample into the Buchner funnel and rinse with the extraction solvent mixture.

If particulate matter is observed, filter the entire extracted sample again through newly prepared filter paper using the original funnel or filter at a concentrated volume with a .45 µm membrane filter.

11.3 Extract Concentration

11.3.1 For each sample being concentrated, rinse a Snyder column with methylene chloride.

11.3.2 Pour the extract into a KD apparatus. Add 2-3 boiling chips to each K-D flask and attach a Snyder column. If the Snyder column is not still wet from the rinsing process, add 1-2 ml methylene chloride to the top of the column.

11.3.2.1 Note: For Method 3550C, the extract is required to be poured through a powder funnel inserted into the top of the KD apparatus and containing a glass wool plug and 10 g of furnaced sodium sulfate.

11.3.3 Place the K-D apparatus on a water bath set at 80-90°C. The apparatus should be placed in the bath so that the entire lower rounded surface of the flask is bathed in hot vapor. Adjust the vertical position of the apparatus and the water temperature as required to complete the concentration in 10-15 minutes. At the proper rate of distillation the balls of the column will actively chatter but the chambers will not flood with condensed solvent. When the apparent volume of the sample reaches 2-4 ml, remove the K-D apparatus from the water bath and allow it to drain and cool for at least 10 minutes.

11.3.4 Final concentration volume of semivolatile fractions:

11.3.4.1 Remove the Snyder column and K-D, then concentrate the extract to 1.0 ml volume using the nitrogen blowdown technique or microsnyder **concentration**. Transfer the entire 1.0 ml into a 2-ml amber autosampler vial labeled with the sample number,

prep code (-176), and extraction date. Note the final volume on the Extractions Worksheet.

11.3.4.2 Deliver the Extraction Worksheet and extracts to the semivolatile laboratory and complete chain-of-custody documentation.

12.0 Data Analysis and Calculations

Calculations must be consistent with the Quality Control SOP 13.4 "Numerical Data Reduction".

13.0 Method Performance

This method was validated through in-house laboratory studies of method detection limits and precision and accuracy for single analysts. The data are retained by the QA department.

14.0 Pollution Prevention

The solvents used in this procedure pose little threat to the environment when recycled and managed properly. Pollution prevention encompasses any technique that reduces or eliminates the quantity or toxicity of waste at the point of generation. Numerous opportunities for pollution prevention exist in laboratory operation. The EPA has established a preferred hierarchy of environmental management techniques that places pollution prevention as the management option of first choice. Whenever feasible, laboratory personnel should use pollution prevention techniques to address their waste generation. When wastes cannot be feasibly reduced at the source, the Agency recommends recycling as the next best thing. See SOP 12.1, "Hazardous Waste Disposal", regarding laboratory procedures for recycling solvent waste streams.

15.0 Waste Management

It is the laboratory's responsibility to comply with all federal, state, and local regulations governing waste management, particularly the hazardous waste identification rules and land disposal restrictions, and to protect the air, water, and land by minimizing and controlling all releases from fume hoods and bench operations. Compliance with all sewage discharge permits and regulations is also required.

Samples preserved with HCl, HNO_3, or H_2SO_4 to pH <2 are hazardous and must be handled as hazardous waste.

Refer to the Hazardous Waste Management and Safety SOPs located in the lab.

16.0 References

16.1 Test Methods for Evaluating Solid Waste, Physical/Chemical Methods, SW-846, 3rd Edition, Update III, 12/96, Methods 3550B and 8270C; Update IV, Methods 3550C and 8270D, 02/07

16.2 Standard Methods for the Examination of Water and Wastewater, 20th (1998) Editions upon promulgation, Method 1080

16.3 Code of Federal Register, 40 CFR, Part 136, "Guidelines for Establishing Test Procedures for Priority Pollutants"

16.4 Quality Control SOP 13.6, "Proper Documentation Procedures"

16.5 Quality Control SOP 13.4, "Numerical Data Reduction"

16.6 NELAC Standards, effective July 2003**, plus revisions**

16.7 QA/G6: Guidance for Preparing Standard Operating Procedures (SOPs) EPA/600/B-07/001, April, 2007.

16.8 CompuChem Quality Manual, Revision **12**, **August 3, 2009, plus revisions**

16.9 Sample Control SOP 4.6, "Storing Samples"

16.10 Department of Defense Quality Systems Manual for Environmental Laboratories, Version **4.1, April 22, 2009, plus revisions**

16.11 Sample Control SOP 4.6, "Storing Samples"

16.12 Quality Control SOP 13.16, "Top Loading Balance Calibration & Maintenance."

16.13 Instrument Procedure 477, "GC/MS Analysis of Extractable Semivolatiles in Aqueous and Solid Samples by SW846 and NYSASP"

16.14 Organic Extractions Lab SOP 8.2, "Sonication Procedure"

17.0 Attachments as Tables, Diagrams, and Flowcharts

17.1 Attachment 1 - Extraction Worksheet

17.2 Attachment 2 - Semivolatile Surrogate Solution #393 - Example Certificate of Analysis

17.3 Attachment 3 – 8270 Validation Spike I

17.4 Attachment 4 – 8270 Validation Spike II

Attachment 1

EXTRACTION WORKSHEET

ASSIGNED TO: _____

Low Level Soil S-V Methods 3550B/C for 8270C/D

CompuChem

-176

DATE EXTRACTED/POSTED: _____

EMP ID NUMBER: _____

BATCH NO. _____

	COMPUCHEM NUMBER	CLIENT SAMPLE ID	QC SAMPLE TYPE	SAMPLE WEIGHT (g)	FINAL VOLUME (ml)	COMMENTS
1						Add 1.0 mL of validation spike to LCS and SSs unless otherwise noted
2						
3						GPC (3640A) PERFORMED Y / N
4						
5						
6						
7						
8						
9						
10						
11						
12						
13						
14						
15						
16						
17						
18						
19						
20						
21						
22						
23						
24						
25						
26						

		S-VOL	Others
SURROGATE	NO.	393	
	AMT.	0.5 ml	
	LOT		
SPIKE	NO.		VALID.
	AMT.		1.0 ml
	LOT		

FINAL VOLUME VERIFIED: _____

SUPERVISOR REVIEWED: _____

SURROGATE & SPIKE ADDED BY: _____/_____
Initials Date

Witness _____/_____
Initials Date

Analyst initials. Extracted _____ KD _____ N2 _____ Bottle up _____

Manufacturer and lot number of reagents/solvents used _____

Rev. 3/3/09:dce

Attachment 2

Certificate of Analysis

NSI Solutions, Inc. *7517 Precision Drive, Suite 101* Raleigh, NC 27617 * 1-800-234-7837

Mixture Name: BNA Surrogates (SW 846)
Catalog Number: WL-371-C
Lot Number: 032709-36

Expiration Date: 03/11
Solvent: Methanol
(FLAMMABLE, IRRITANT)

COMPOUND NUMBER	ANALYTE	PURITY (%)	GRAVIMETRIC CONCENTRATION (ug/mL)
W-0193-10	2-Fluorophenol	99.8	200.0
W-0531-26	Phenol-d5	99.3	200.0
W-0875-05	2,4,6-Tribromophenol	99.8	200.0
W-0194-21	2-Fluorobiphenyl	99.1	100.0
W-0166-16	Nitrobenzene-d5	99.7	100.0
W-0909-24	p-Terphenyl-d14	99.0	100.0

PREPARATION: Reported concentration value has been corrected for purity. Concentration is calculated from wt/vol or vol/vol measurements using microbalances calibrated with NIST traceable weights and or ASTM Class A volumetric glassware or calibrated equivalent labware.

STORAGE & HANDLING: Store at $\leq 5^{\circ}$ C. Allow to equilibrate to room temperature before use.

Kristi Bright, Organic Chemist

Attachment 3

Analytical Standard Record
COMPUCHEM
8K07006

Description:	8270 Validation I	Expires:	05/06/2009
Standard Type:	Analyte Spike	Prepared:	11/07/2008
Solvent:	Methanol	Prepared By:	Rodney Mckoy
Final Volume (mls):	25	Department:	SVOA
Vials:	1	Last Edit:	11/07/2008 09:45 by RM

61673

Analyte	CAS Number	Concentration	Units
Acenaphthylene	208-96-8	80	ug/mL
Benzo (b) fluoranthene	205-99-2	80	ug/mL
3-Nitroaniline	99-09-2	80	ug/mL
4,6-Dinitro-2-methylphenol	534-52-1	80	ug/mL
4-Bromophenyl phenyl ether	101-55-3	80	ug/mL
4-Chloro-3-methylphenol	59-50-7	80	ug/mL
4-Chloroaniline	106-47-8	80	ug/mL
4-Chlorophenyl-phenylether	7005-72-3	80	ug/mL
2-Nitroaniline	88-74-4	80	ug/mL
Acenaphthene	83-32-9	80	ug/mL
2-Methylnaphthalene	91-57-6	80	ug/mL
Acetophenone	98-86-2	80	ug/mL
Aniline	62-53-3	80	ug/mL
Anthracene	120-12-7	80	ug/mL
Atrazine	1912-24-9	80	ug/mL
Azobenzene	103-33-3	80	ug/mL
Benzaldehyde	100-52-7	80	ug/mL
Benzo (a) anthracene	56-55-3	80	ug/mL
1,2,4-Trichlorobenzene	120-82-1	80	ug/mL
4-Nitroaniline	100-01-6	80	ug/mL
2,4,5-Trichlorophenol	95-95-4	80	ug/mL
1,2-Dichlorobenzene	95-50-1	80	ug/mL
1,2-Dinitrobenzene	528-29-0	80	ug/mL
1,3-Dichlorobenzene	541-73-1	80	ug/mL
1,3-Dinitrobenzene	99-65-0	80	ug/mL
1,4-Dichlorobenzene	106-46-7	80	ug/mL
1,4-Dinitrobenzene	100-25-4	80	ug/mL
1-Methylnaphthalene	90-12-0	80	ug/mL
2-Nitrophenol	88-75-5	80	ug/mL
2,3,5,6-Tetrachlorophenol	935-95-5	80	ug/mL

Reviewed By Date

Page 1 of 3

Attachment 3 (Continued)

Analytical Standard Record
COMPUCHEM
8K07006

Benzo (g,h,i) perylene	191-24-2	80	ug/mL
2,4,6-Trichlorophenol	88-06-2	80	ug/mL
2,4-Dichlorophenol	120-83-2	80	ug/mL
2,4-Dimethylphenol	105-67-9	80	ug/mL
2,4-Dinitrophenol	51-28-5	80	ug/mL
2,4-Dinitrotoluene	121-14-2	80	ug/mL
2,6-Dinitrotoluene	606-20-2	80	ug/mL
2-Chloronaphthalene	91-58-7	80	ug/mL
2-Chlorophenol	95-57-8	80	ug/mL
2,3,4,6-Tetrachlorophenol	58-90-2	80	ug/mL
N-Nitrosodimethylamine	62-75-9	8	ug/mL
Benzo (a) pyrene	50-32-8	80	ug/mL
Hexachlorobenzene	118-74-1	80	ug/mL
Hexachlorobutadiene	87-68-3	80	ug/mL
Hexachlorocyclopentadiene	77-47-4	80	ug/mL
Hexachloroethane	67-72-1	80	ug/mL
Indeno (1,2,3-cd) pyrene	193-39-5	80	ug/mL
Isophorone	78-59-1	80	ug/mL
Fluoranthene	206-44-0	80	ug/mL
N-Nitroso-di-n-propylamine	621-64-7	80	ug/mL
Diphenylamine	122-39-4	80	ug/mL
Naphthalene	91-20-3	80	ug/mL
Nitrobenzene	98-95-3	80	ug/mL
o-Cresol	95-48-7	80	ug/mL
p-Cresol	106-44-5	80	ug/mL
Pentachlorophenol	87-86-5	80	ug/mL
Phenanthrene	85-01-8	80	ug/mL
Phenol	108-95-2	80	ug/mL
Pyrene	129-00-0	80	ug/mL
m-Cresol	108-39-4	80	ug/mL
Caprolactam	105-60-2	80	ug/mL
Benzo (k) fluoranthene	207-08-9	80	ug/mL
Benzyl alcohol	100-51-6	80	ug/mL
Biphenyl	92-52-4	80	ug/mL
Bis(2-chloroethoxy)methane	111-91-1	80	ug/mL
Bis(2-chloroethyl)ether	111-44-4	80	ug/mL
Bis(2-chloroisopropyl)ether	39638-32-9	80	ug/mL
Bis(2-ethylhexyl)phthalate	117-81-7	80	ug/mL
Fluorene	86-73-7	80	ug/mL

Reviewed By _____ Date _____

Page 2 of 3

Attachment 3 (Continued)

Analytical Standard Record
COMPUCHEM
8K07006

Butylbenzylphthalate	85-68-7	80	ug/mL
Pyridine	110-86-1	80	ug/mL
Carbazole	86-74-8	80	ug/mL
Chrysene	218-01-9	80	ug/mL
Di-n-butylphthalate	84-74-2	80	ug/mL
Di-n-octylphthalate	117-84-0	80	ug/mL
Dibenzo (a,h) anthracene	53-70-3	80	ug/mL
Dibenzofuran	132-64-9	80	ug/mL
Diethylphthalate	84-66-2	80	ug/mL
Dimethylphthalate	131-11-3	80	ug/mL
Bis-(2-Ethylhexyl) Adipate	103-23-1	80	ug/mL

Parent Standards used in this standard:

Standard	Description	Prepared	Prepared By	Expires	Last Edit	(mls)
8C14020	NSI C-701 8270 BNA MIX	03/14/200	Rodney Mckoy	07/31/200	03/14/2008 13:41 by RM	2
8C14022	Absolute OLMO4.1 Additionals	03/14/200	Rodney Mckoy	01/30/201	03/14/2008 14:10 by RM	1

Reviewed By Date

Page 3 of 3

Attachment 4

Analytical Standard Record
COMPUCHEM
8K07007

Description:	8270 Validation II Spike	Expires:	05/07/2009
Standard Type:	Analyte Spike	Prepared:	11/07/2008
Solvent:	Methanol	Prepared By:	Rodney Mckoy
Final Volume (mls):	25	Department:	SVOA
Vials:	1	Last Edit:	11/07/2008 09:49 by RM

61674

Analyte	CAS Number	Concentration	Units
o-Toluidine	95-53-4	80	ug/mL
Benzidine	92-87-5	80	ug/mL
3,3´-Dichlorobenzidine	91-94-1	80	ug/mL

Parent Standards used in this standard:

Standard	Description	Prepared	Prepared By	Expires	Last Edit	(mls)
8C14010	Restek@31853 8270 Bezidines Mi	03/14/200	Rodney Mckoy	03/31/201	03/14/2008 12:00 by RM	1

Reviewed By Date

Page 1 of 1

CompuChem
A Division Of
Liberty Analytical Corp.

501 Madison Avenue
Cary, NC 27513

NELAP accredited

SOP DOCUMENTATION FORM

This form must accompany all new and revised Standard Operating Procedures (SOPs) when you turn them in to Quality Assurance for review. Please fill out the entire block below (except effective date).

This is a new procedure _____ revised procedure ✓ outdated procedure (archive) _____

- Procedure Code: IP 477 SOP Section #: 2.5.2.7 Revision #: 14

SOP Title: GCMS Analysis of Extractable Semivolatiles in Aqueous and Solid Sample Extracts by SW-846

Effective date: (QA fills in) 04-05-2010

- Procedure prepared by: Bob McGeen Date: 04-01-2010
- Procedure approved by: (If the manager prepared the SOP, a qualified second party should sign) Date: 04-02-2010
- Reason for change: Address comments from SC DHEC SOP review plus changes from internal review
- This procedure meets the requirements of the following approved method references: SW-846 3rd Edition, Update III, Method 8270C, 12/96; SW-846 3rd Edition, Update IV, Method 8270D, 2/07

Procedure approved by a QA Representative (unless QA Representative signed above):

_____ Date: _____

On an annual basis: Lab managers are required to review lab practices and revise the SOP if necessary. If no revision is necessary, indicate by your signature that the SOP has been reviewed.

Annual Review—Signature: _____ Date: _____

Annual Review—Signature: _____ Date: _____

Annual Review—Signature: _____ Date: _____

Annual Review—Signature: _____ Date: _____

Instrument Procedure 477: GC/MS Analysis of Extractable Semivolatiles in Aqueous and Solid Sample Extracts by SW-846

Table of Contents

SECTION	PAGE NO.
Section 1.0 – Scope and Application	2
Section 2.0 – Summary of Method	2-3
Section 3.0 – Definitions	3-4
Section 4.0 – Interferences	4
Section 5.0 – Safety	4
Section 6.0 – Equipment and Supplies	4-5
Section 7.0 – Reagents and Standards	**5-7**
Section 8.0 - Sample Preservation and Storage	7
Section 9.0 – Quality Control	7-12
Section 10.0 – Calibration and Standardization	**12-20**
Section 11.0 – Procedure	**20-24**
Section 12.0 – Data Analysis and Calculations	**24-29**
Section 13.0 – Method Performance	**29**
Section 14.0 – Pollution Prevention	**30**
Section 15.0 – Waste Management	**30**
Section 16.0 – References	**30-31**
Section 17.0 – Attachments as Tables, Diagrams, and Flowcharts	**31**
Attachment 1	**32-34**
Attachment 2	**35-38**
Attachment 3	**39**
Attachment 4	**40**
Attachment 5	**41-46**
Attachment 6	**47-48**
Attachment 7	**49-50**
Attachment 8	**51-52**
Attachment 9	**53**
Attachment 10	**54**

ORIGINAL MASTER COPY CONTROLLED COPY
If words above are not highlighted, this is an uncontrolled copy of this document.

Instrument Procedure 477: GC/MS Analysis of Extractable Semivolatiles in Aqueous and Solid Sample Extracts by SW-846

1.0 Scope and Application

This method covers the determination of a variety of semivolatile compounds in aqueous and solid samples. These compounds are partitioned into an organic solvent and are amenable to analysis by gas chromatograph/mass spectrometer (GC/MS) instrumentation. The method involves solvent extraction of the matrix, and GC/MS analysis to determine the semivolatile compounds present in the sample. Target compounds for this method are listed in Attachment 1, along with associated internal standards, surrogates and quantitation ions. Reporting limit are included in Attachment 3.

Staff members performing the procedures described in this SOP are responsible for reading, understanding, and complying with the SOP requirements. Supervisors are responsible for directing the analyst to the controlled SOP, and providing adequate explanation of the material contained therein.

This procedure is restricted to use by or under the supervision of analysts experienced in the instrumentation or preparative methods and who have demonstrated the ability to generate acceptable results through QC samples and analyst capability studies.

2.0 Summary of Method

Water samples are extracted prior to analysis following Sample Preparation Procedure –079, "Preparation of Water Samples for the Analysis of Low Level Semivolatile Organic Compounds by SW-846." Soil samples are extracted using Sample Preparation Procedure –176, "Preparation of Soil/Sediment/Sludge Samples for the Analysis of Low-Level Semivolatile Organic Compounds SW-846," Sample Preparation Procedure –236, "Soxhlet Extraction of S/S/S Samples by Method 3540C in SW-846," Sample Preparation Procedure –183, "Medium Level Preparation Procedure for Semivolatile Organics in Soil Samples by SW-846," or Sample Preparation Procedure –247, "Automated Soxhlet Extraction of Soil/Sediment/Sludge and Wipe Samples by SW-846." This procedure encompasses both EPA 8270C and EPA 8270D. All samples for SC DHEC must be analyzed by EPA 8270D. This SOP is NOT for use with Ohio VAP projects. Please see Ohio VAP specific SOP.

Sample extracts are injected into a GC/MS system equipped with a narrow bore, fused silica capillary column. The GC is temperature programmed in order to separate the analytes for detection by the MS. Target compounds are identified in the samples by analyzing standards under the same conditions used for samples, comparing mass spectra with established library spectra, and comparing GC retention times with retention times

from the latest continuing calibration verification standard. Internal standards and surrogate compounds are added to all field and QC samples. An average relative response factor is established for each target and surrogate compound during the initial calibration procedures and this average response factor is used to calculate the analyte concentrations.

3.0 Definitions

3.1 Method detection limit (MDL) – The minimum concentration of an analyte that can be measured and reported with 99% confidence that the analyte concentration is greater than zero and is determined from analysis of a sample in a given matrix containing the analyte (40 CFR, Part 136, Appendix B.)

3.2 Reporting Limit – The laboratory reporting limit is based on the lowest multipoint calibration standard concentration. For organic methods, values detected below the reporting limit and above the MDL may be reported and qualified as an estimated concentration.

To meet the requirements of the DOD-QSM, if the reporting limit is not at least three times higher than the calculated MDL value, the reporting limit is adjusted upward in order to achieve this minimal ratio.

3.3 Reporting Units – µg/L for water, µg/Kg for soil, and ug/wipe for wipe samples

3.4 A Sample Delivery Group (SDG) is defined by the following, whichever is more frequent:

- each 20 field samples received within a case, or
- each 7 calendar day period during which field samples in a case are received (14 calendar days per client request) beginning with the receipt of the first sample.

NOTE: The DOD-QSM and SC DHEC do not accept the SDG approach, unless the samples are prepared in a single batch. When a group of up to 20 field samples of a similar matrix are prepared as one batch, method-specified QC samples such as a method blank, laboratory control sample, matrix spike, and matrix spike duplicate must also be prepared together. If samples are batched together from different sites, project-specific QC must be processed.

3.5 Extraction Batch – a group of to 20 field samples of a similar matrix, method-specified QC samples such as a method blank, laboratory control sample, matrix

spike, matrix spike duplicate, and matrix duplicate prepared together at the same time.

3.6 DOD-QSM – Department of Defense-Quality Systems Manual

3.7 SC DHEC – South Carolina Department of Health and Environmental Control

3.8 Ohio VAP – Ohio Environmental Protection Agency Voluntary Action Program

4.0 Interferences

4.1 Contamination by carryover can occur whenever high concentration and low concentration samples are sequentially analyzed. To reduce carryover, the sample syringe must be rinsed with solvent between sample injections. Whenever an unusually concentrated sample is encountered, the following sample must be evaluated for carryover.

4.2 If any contamination is present in blanks, samples or QC, the source must be identified and re-extraction of part or the entire analytical batch may be required.

5.0 Safety

5.1 Appropriate protective equipment and clothing must be used under the assumption that all samples are potentially hazardous. During sample preparation, i.e., extraction, safety glasses, gloves and lab coats are a minimum requirement. Sample extracts must be prepared under a hood. The persistent presence of noxious odors may be indicative of failure of the laboratory ventilation system and must be reported to a supervisor or manager.

5.2 Laboratory staff members are required to review the Chemical Hygiene Plan for general safety policies and Material Safety Data Sheets (MSDS) for solvents and reagents used in the laboratory. The MSDS are located in the Quality Assurance department.

6.0 Equipment and Supplies

6.1 Analytical Columns

6.1.1 RTX-5MS and RTX-5SilMS, 0.32 mm ID, 0.25 µm film thickness

6.2 GC

6.2.1 Hewlett Packard (HP) 5890 Series with Electronic Pressure Control (EPC)

6.2.2 Hewlett Packard (HP) 6890N Series with Electronic Pressure Control (EPC)

6.3 MS

6.3.1 HP 5972A Mass Selective Detector (MSD)
HP 5973N Mass Selective Detector (MSD)

6.4 AutoSampler

6.4.1 Hewlett Packard 7673 Automated Liquid Sampler
6.4.2 Hewlett Packard 7873B Automated Liquid Sampler

6.5 Data System

6.5.1 A computer is interfaced to the mass spectrometer to allow the continuous acquisition and storage on machine-readable media of all mass spectra obtained throughout the duration of the chromatographic program. HP ChemServer is used for data collection.

6.5.2 The data processing computer has software that searches any GC/MS data file for ions of a specified mass and plots ion abundances versus time or scan number. This type of plot is defined as an Extracted Ion Current Profile (EICP). Also, for the non-target compounds, the software compares sample spectra against reference library spectra. The reference library used is the NIST Mass Spectral library (NBS129K.1).

6.5.3 The Hewlett Packard HP 9000 series 735 Unix Workstation, employed with Target3 software by Thru-Put Systems, are used for data processing and short term data storage.

6.6 Syringes

6.6.1 10 µL Hamilton syringe

7.0 <u>Reagents and Standards</u>

Refer to the Standards Preparation Logbook 22 F and applicable standard preparation SOPs for details on preparation of standards used in this procedure. All standards used in this procedure are prepared in optima grade methylene chloride.

7.1 Reagent water – All water used in this procedure must be reagent-grade Type I with regard to resistivity of > 10 megohm-cm (19th and 20th Editions of Standard

Methods, Method 1080), and is demonstrated to meet the blank criteria contained in this Standard Operating Procedure (SOP). It is referred throughout this SOP as reagent water.

7.2 Methylene Chloride – analytical grade

7.3 Reference Standards

7.3.1 Stock standards

7.3.1.1 Stock standards are prepared from certified, pure standard materials or purchased as certified solutions.

7.3.1.2 Stock standards are stored as recommended by the manufacturer (4 ± 2° C) in the Organic Standards Preparation laboratory.

7.3.1.3 Stock standards are replaced after 1 year or sooner, if problems occur.

7.3.1.4 Please refer to the Promium Element LIMS for standard preparation.

7.3.2 Working Standards

Working standards are stored in the analysis laboratory at 4 ± 2° C separate from sample extracts, when not in use. Working standards are prepared every six months or sooner.

7.3.2.1 Internal standard solution is prepared at a concentration of 800 µg/mL.

7.3.2.2 Initial calibration standard solutions are prepared at concentrations of 5, 10, 25, 40, 60 and 80 µg/mL for the majority of analytes. **The 40 ug/mL standard also serves as the Continuing Calibration Verification (CCV) standard.**

7.3.2.2.1 Attachment 1 lists **the entire** common target analytes included in the 8270 analysis code, in the **Promium** LIMS, calibration.

7.3.2.2.2 Attachment 2 lists **the entire** common target analytes included in the 8270 Appendix IX analysis code, in the **Promium** LIMS, calibration.

7.3.2.3 The Initial Calibration Verification (ICV) standard is at a concentration of 40 ug/mL and is prepared from a second source.

7.3.2.4 Please refer to the Promium Element LIMS for standard preparation.

8.0 Sample Preservation and Storage

8.1 Samples are preserved and stored according to the tables in Sample Control SOPs 4.1, "Receiving Samples" and 4.6, "Storing Samples." Sample holding times are also listed.

8.2 All extracts must be analyzed within 40 days of extraction.

8.3 All sample extracts are stored in the refrigerator in the laboratory at 2 - 6° C prior to analysis except for samples to be analyzed under DOD-QSM or Ohio VAP requirements which must be stored in the freezer at -10° C. After analysis, extracts are returned to Sample Control for long-term storage and disposal.

9.0 Quality Control

9.1 Surrogates

9.1.1 Surrogates are added to all field and QC samples and are used to measure the efficiency and accuracy of the analytical system. For surrogate standard preparation please refer to the appropriate sample preparation procedure or the Promium Element LIMS. Statistical control limits for surrogates are listed in the following table.

Compound	Aqueous (% Recovery)	Soil (% Recovery)
Nitrobenzene-d_5	35-110	28-110
2-fluorobiphenyl	45-110	39-112
Terphenyl-d_{14}	49-120	51-119
Phenol-d_5	10-110	38-110
2-fluorophenol	11-110	33-110
2,4,6-tribromophenol	44-131	34-150

9.1.1.1 If the surrogate recoveries are outside the control limits in 9.1.1, re-analyze the sample neat (undiluted). Do not dilute unless it is necessary to bring target analytes into the calibration range. If the surrogate recoveries are still outside of control limits, re-extract and reanalyze the sample.

9.1.1.2 If insufficient sample volume remains for re-extraction or the holding time has been exceeded, report results and document the failing surrogate results in the narrative.

9.1.2 The surrogate control limits required by the DOD-QSM are listed in the following table and in attachment 6.

Compound	Aqueous (% Recovery)	Soil (% Recovery)
Phenol-d_5	N/A	40-100
2-Fluorobiphenyl	50-110	45-105
Terphenyl-d_{14}	50-135	30-125
2,4,6-Tribromophenol	40-125	35-125
2-Fluorophenol	20-110	35-105
Nitrobenzene-d_5	40-110	35-100

9.1.2.1 If the surrogate recoveries are outside the control limits in 9.1.2, re-analyze the sample. If the surrogate recoveries are still outside of control limits, re-extract and reanalyze the sample, if sufficient sample volume is available.

9.1.2.2 If field sample results are reported with failing surrogate recoveries, qualify the results as estimated concentrations in the narrative. Refer to the DOD-QSM "J" flag.

9.1.2.3 If QC samples results are reported with failing surrogate recoveries, qualify the results as estimated concentrations in the narrative. Refer to the DOD-QSM "Q" flag.

9.2 Internal Standards

9.2.1 Internal standards are added to an aliquot of the extract just prior to analysis in the instrumentation laboratory and are used in the quantitation of target analytes and surrogates.

9.2.2 The internal standard retention times in the continuing calibration standard must not differ more than ± 30 seconds from those in the mid point standard (80 ηg) in the most recent initial calibration. Additionally, the area response of the internal standards in the continuing calibration verification standard must be within -50% and +100% of those in the mid point standard of the most recent initial calibration.

9.2.3 If a sample fails internal standard acceptance criteria, reanalyze neat. Do not dilute unless it is necessary to bring target analytes into the calibration range or there is obvious matrix interference.

9.3 Method Blanks

9.3.1 A method blank is prepared with every analytical batch of up to 20 samples. It is used to indicate extraction efficiency and contamination control within the analytical system. The method blank must be analyzed on each GC/MS system used to analyze the associated samples.

9.3.2 Any target analyte detected in the method blank must be less than the reporting limit. Surrogate and internal standard responses must be within acceptance windows

9.3.2.1 To meet the requirements of the DOD-QSM, all target analytes in the method blank must be at concentrations < half the reporting limit.

9.3.3 If the method blank fails acceptance criteria for surrogate recovery or contamination, the analytical system is considered to be out of control. The source of the contamination must be investigated and appropriate corrective measures taken and documented before more samples are analyzed. All samples processed with a method blank that is out of control must be re-extracted and reanalyzed, unless the method blank meets acceptance criteria upon re-injection.

9.4 Laboratory Control Sample (LCS)

9.4.1 An LCS for an aqueous matrix is reagent water and for a solid matrix is furnaced Ottawa sand, or an additional portion of furnaced sodium sulfate, which has been fortified with target compounds and surrogate standards. The LCS is prepared with each extraction batch of up to 20 samples. The LCS should be analyzed after any method blank associated with the group of samples. The LCS data are used to ensure that any failing spiked target compound in the matrix spike and matrix spike duplicate is due to

interference and not representative of an analytical system that is out of control. All surrogates in an LCS must pass. If any fail the LCS is re-analyzed (neat). Instrument maintenance may be needed (see section 9.7) If reanalysis fails the entire batch must be re-extracted. New surrogate standard preparation may be necessary.

9.4.2 An acceptable LCS will contain all project compounds within the in-house control limits listed in Attachments 5. A certain number of recoveries may be outside of the control limits but within the marginal exceedances listed in Attachment 5 depending on the number of compounds spiked. See the following table.

Number of analytes in the LCS	Allowed number of Marginal Exceedances
>90	5
71-90	4
51-70	3
31-50	2
11-30	1
<11	0

Note: SC DHEC – South Carolina Department of Health and Environmental Control does not allow for marginal exceedance failures in the LCS. All project analytes must pass in the LCS.

9.4.3 To meet the requirements of the DOD-QSM, the LCS must meet the control limits listed in Attachment 6 with allowance for a number of marginal exceedances based on the number of compounds spiked (see table in section 9.4.2). All target compounds must be spiked.

9.4.3.1 If the LCS fails acceptance criteria, re-extract and reanalyze all associated samples (if sufficient sample volume remains).

9.4.3.2 Sample results associated with a failing LCS must be qualified in the narrative. Refer to the DoD-QSM "Q" flag.

9.5 Matrix Spike and Matrix Spike Duplicate

9.5.1 A matrix spike and matrix spike duplicate (MS/MSD) are prepared with each SDG.

9.5.2 The majority of the acid spiked compound recoveries and relative percent differences (RPDs) and the majority of the base/neutral spiked compound recoveries and RPDs should be within the control limits listed in Attachment 5 and the RPD limits listed in Attachment 7. A subset of analytes may be reported depending on specific project requirements.

9.5.2.1 To meet the requirements of the DOD-QSM, the LCS control limits must be applied to the duplicate matrix spikes. The RPD between the duplicate matrix spikes must be ≤ 30%,

9.5.2.2 If the duplicate matrix spikes do not meet DOD-QSM criteria, contact the client for guidance. Results for specific compounds in the original sample associated with failing matrix spikes must be qualified in the narrative as estimated values. Refer to the DOD-QSM "J" flag.

9.5.3 If the sample and its associated MS/MSD show the same recovery trend, then re-extraction is not required. If the original associated with the MS/MSD does not meet QC criteria, it must be reanalyzed neat or re-extracted then reanalyzed, if the MS/MSD surrogate recoveries are within limits. Do not dilute unless dilution is necessary to bring target analytes into the calibration range or there is obvious matrix interference

9.5.4 If the LCS results are acceptable, and the MS/MSD results are consistent with the original, unspiked sample, it can be assumed that the poor recovery is matrix related.

9.6 Contingency

9.6.1 If due to a lab accident or to QC failures, a re-preparation and analysis are required for the sample and insufficient sample volume remains, the Project Manager must be alerted and will contact the client for direction on how to proceed.

9.6.2 If persistent contamination occurs in the laboratory, analysis must be halted until the source of the contamination can be identified and isolated. When the contamination issue is resolved, samples analysis may proceed.

9.6.3 Any other issues that potentially effect data quality should also be addressed with the Project Manager.

9.7 Corrective Actions

9.7.2 Instrument related corrective actions include, but are not limited to changing the liner, septum, cutting or replacing the column, replacing the source, cleaning the injection port and replacing the inlet base seal.

9.7.2.1 If the column or the source is replaced a new initial calibration must be performed.

9.7.3 Standard related corrective action includes preparing new standards from existing stock solutions and preparing new stock solutions.

9.7.3.1 If surrogate or spiking solutions are suspected of needing to be replaced notify the preparation laboratory supervisor as soon as possible.

9.7.3.2 Request an aliquot of the solution and analyze. Report results to the preparation laboratory supervisor.

10.0 Calibration and Standardization

10.1 Tuning the GC/MS

10.1.1 Prior to analysis of any samples, blanks, or calibration standards, the laboratory must establish that the GC/MS system meets the mass spectral ion abundance criteria for a tuning standard performance check solution containing Decafluorotriphenylphosphine (DFTPP).

10.1.1.1 At the time of tuning the instrument, the laboratory clock and instrument system clock must be verified to be in agreement for both time and date. Document that the lab's clock and date (LCD) are the same as the instrument's system clock and date (SCD) by writing "LCD=SCD" in the instrument's run log.

10.1.2 The instrument is standardized (tuned) by analyzing the DFTPP tuning solution every 12 hours. Two µL of the 25-ng/µL DFTPP solution (50-ng) are injected into the GC/MS.

10.1.3 The peak selection criteria for DFTPP analysis are as follows.

10.1.3.1 Acquire and average the apex of the DFTPP peak and one scan immediately before and after the apex. Subtract a single background scan prior to the peak, but no more than 20 scans

prior to the elution of DFTPP. Also, do not subtract part of the DFTPP peak. The DFTPP acceptance criteria are listed in the following table.

Mass	Ion Abundance Criteria
51	30.0-80.0% of mass 198
68	< 2.0% of mass 69
69	present
70	< 2.0% of mass 69
127	25.0-75.0% of mass 198
197	<1.0% of mass 198
198	Base peak, 100% relative abundance(see note)
199	5.0-9.0% of mass 198
275	10.0-30.0% of mass 198
365	Greater than 0.75% of mass 198
441	Present but < mass 443
442	40.0-110.0% of mass 198
443	15.0-24.0% of mass 442

Note: All ion abundances are normalized to m/z 198, the normal base peak.

10.1.4 The DFTPP solution also contains benzidine, pentachlorophenol, and 4,4'-DDT to assess the condition of the column and injection port.

10.1.4.1 Benzidine, pentachlorophenol, and 4,4´-DDT are added as evaluation aids to indicate injector port and GC column efficiencies.

10.1.4.2 4,4´-DDT is used to assess the instrument condition prior to GC/MS confirmations of pesticide analytes.

10.1.4.3 Excessive 4,4´-DDT breakdown and poor peak shape and response for benzidine and pentachlorophenol indicate maintenance is required for the injector port or GC column.

10.1.5 The following breakdown and tailing factor criteria must be met for the DFTPP analysis to be acceptable. (See attachment 4).

10.1.5.1 The % breakdown for DDT into DDE and DDD must not exceed 20%.

10.1.5.2 Acceptance Criteria for the tailing factor for benzidine

10.1.5.2.1 The tailing factor for benzidine must not exceed 3.0 for 8270C.

10.1.5.2.2 The tailing factor for benzidine must not exceed 2.0 for 8270D.

10.1.5.3 Acceptance Criteria for the tailing factor for pentachlorophenol.

10.1.5.3.1 The tailing factor for pentachlorophenol must not exceed 5.0 for 8270C.

10.1.5.3.2 The tailing factor for pentachlorophenol must not exceed 2.0 for 8270D.

Note: When the breakdown or tailing factor criteria are not met it is indicative that instrument maintenance is necessary for the column and/or the injector port.

10.1.6 All valid injections must be made within the 12-hour calibration period that begins with the time of the injection of the DFTPP. Each injection thereafter must be recorded on the instrument run log (Attachment 3).

10.2 Initial Calibration

10.2.1 An initial six-point calibration ("multipoint") must be performed if a valid multipoint for the method has not already been analyzed on the instrument or if the continuing calibration standard (12-hour continuing calibration standard) does not meet all acceptance criteria.

10.2.2 The initial calibration standards are at six concentration levels (the majority of the analytes are at 10, 20, 50, 80, 120, and 160 total ng per 2-µL). The low standard must be at or below the reporting limit. Each calibration standard contains each target compound of interest, internal standards, and each surrogate. Please refer to the Promium Element LIMS for information on preparation of standards.

10.2.3 Allow the calibration standard solutions to equilibrate to room temperature. Place an aliquot of each calibration standard solution in an amber 2-mL autosampler vial and place the vials on the instrument's autosampler.

Note: All injection volumes are 2-µL and are performed with a using cold needle.

10.2.4 Structural isomers must be identified as individual isomers if sufficient resolution can be achieved. Sufficient resolution is defined as having the height of the valley between two peaks less than 50 % of the average of the height of both peaks. Benzo(b) fluoranthene and Benzo(k) fluoranthene are examples of structural isomers that can be resolved. The resolution of such pairs must be verified on the mid-point of the initial calibration and on all subsequent calibration verifications.

10.2.5 Initial Calibration Acceptance Criteria for 8270C

10.2.5.1 The System Performance Check Compounds (SPCCs) N-Nitroso-di-n-propylamine, 2,4-Dinitrophenol, Hexa-chlorocyclopentadiene, and 4-Nitrophenol must have an average response factor of ≥ 0.050.

10.2.5.2 The Calibration Check Compounds (CCCs) Phenol, 1,4-Dichlorobenzene, 2-Nitrophenol, Hexachlorobutadiene, 4-Chloro-3-methylphenol, 2,4-Dichlorophenol, Acenaphthene, Pentachlorophenol, Diphenylamine, 2,4,6-Trichlorophenol, Fluoranthene, Di-n-octylphthalate and Benzo(a)pyrene must have a maximum RSD of 30%.

10.2.5.3 Each of the remaining compounds must have an average RSD of ≤ 15% for the initial calibration to be acceptable.

10.2.5.4 If a short list of compounds is prepared and/or analyzed for the initial calibration, each compound must have an RSD ≤15% or have a linear regression correlation coefficient of ≥ 0.990 (≥ 0.995 for DOD-QSM). The Grand Mean cannot be used for a short list of compounds or DOD -QSM.

10.2.6 Alternate Initial Calibration Acceptance Criteria for 8270C

If the initial calibration criteria in 10.2.**5** are not met, the calibration options in section 10.2.**6**.1 or 10.2.**6**.2 are used.

10.2.6.1 A linear or quadratic regression is used. Quadratic calibration may only be used for analytes which historically exhibit a non-linear response. It is not to be used to extend the calibration range. The correlation coefficient must be

≥ 0.99 for the calibration curve to be acceptable. To meet the requirements of the DOD-QSM the linear regression correlation coefficient must be ≥ 0.995.

Note: DOD-QSM does not accept the use of quadratic regression.

10.2.6.2 The "grand mean" is used. The mean of the RSD for all of the compounds present in the calibration standard is calculated and must be ≤ 15%. The client must be provided with a list of the individual compounds that did not meet the ≤ 15% RSD criteria.

Note: Calibration using the "grand mean" is not allowed by the DOD-QSM.

10.2.7 Initial Calibration Acceptance Criteria for 8270D

10.2.7.1 Each of the compounds must have an RSD of ≤ 20% or have a linear regression correlation coefficient of ≥ 0.990 (≥ 0.995 for DOD-QSM) for the initial calibration for that compound to be acceptable.

10.2.7.1.1 Average response factor must not be used **for compounds** that have an RSD > 20% unless the concentration is reported as estimated.

10.2.7.1.2 If linear regression is used to calibrate a compound, the viability of the quantitation limit should be checked. Requantitate the low point of the calibration curve as an unknown. The concentration must be ± 30% of the true value. Any compound which fails this criterion must only be reported as an estimated value.

10.2.7.1.3 An acceptable initial calibration will contain all project compounds at a minimum response factor, at each level of the calibration curve, listed in Attachment 8.

Note: Any compounds which fail to meet acceptance criteria may only be used as qualified data and reported as estimated or for screening purposes. In order to report non-detects, adequate

sensitivity must be demonstrated at the quantitation limit. Corrective action must be initiated if more than 10 % of the compounds included in the initial calibration fail.

10.2.8 Corrective Actions for the Initial Calibration

10.2.8.**1** Check the instrument operating conditions and perform maintenance as necessary. It may be necessary to clean the ion source, perform column maintenance, change the column, or take other corrective action to achieve the technical acceptance criteria.

10.2.8.2 Compare responses for the analytes in each of the standard levels to verify that a single standard analysis is not presenting results significantly higher or lower then the other standard analyses. If that is the case, the wrong standard may have been injected. Or the standard prepared incorrectly. Reanalyze the standard and calculate the response factors and % RSD.

10.2.8.3 The calibration range may be narrowed to determine if linearity can be achieved. The highest or lowest calibration standard may be replaced with a lower or higher concentration. This may cause more dilution re-analyses, if the high level standard is replaced or change the reporting limit if the lower standard is replaced.

10.2.8.4 If neither of the corrective actions in section 10.2.**8**.2 or 10.2.**8**.3 produces an acceptable calibration, perform instrument maintenance and analyze a new initial calibration.

10.3 Initial Calibration Verification (ICV)

10.3.1 Inject 2 µL of a second source ICV standard immediately after the initial calibration has been completed. The concentration of the standard must be at or near the mid-point of the calibration curve. Multiple ICV standards containing different analytes may be necessary to avoid interactions between certain analytes. For example, nitrosamine compounds should be segregated from **other compounds**.

10.3.2 All analytes must be in the range of ± 30% of the expected value.

10.3.2.1 For 8270C an allowance is made that 10% of the analytes can be within 40% of the expected value.

10.3.2.2 Quantitative sample analysis for 8270D must not proceed for analytes which exceed ± 30% of the expected value or do not meet the minimum response factors listed in attachment 8.

10.3.2.3 To meet the requirements of the DOD-QSM, all analyte recoveries in the ICV must be within ± 25% of the expected value.

10.3.3 If criteria in 10.3.2 are not met, reanalyze the ICV standard. If the ICV criteria are still not met, investigate and correct the problem. A freshly prepared ICV standard may be needed. If instrument maintenance is performed analyze a new initial calibration.

10.4 Continuing Calibration Verification (CCV)

10.4.1 Inject 2 µL of the CCV standard at the beginning of the 12-hour period, after the DFTPP acceptance criteria have been met. The CCV standard is the mid-level initial calibration standard level (40 µg/mL).

10.4.2 CCV Acceptance Criteria for 8270C and Corrective Action

10.4.2.1 The internal standard retention times for the CCV standard must not differ from the corresponding internal standards in the mid-point standard (80 ηg) in the most recent initial calibration by more that ± 0.5 minutes (30 seconds).

10.4.2.2 The internal standard area responses for the CCV standard must be within ± 50 % of the corresponding internal standard area responses in the mid-point standard of the most recent initial calibration.

10.4.2.3 The SPCCs (see 10.2.4.1) must have a minimum response factor of ≥ 0.050.

10.4.2.4 The CCCs (see 10.2.4.2) must have a percent drift/difference of ≤ 20%.

10.4.2.5 The remaining target compounds do not have defined % difference/drift criteria. The lab has established a warning limit of 50% and an action limit of 90% D. These criteria are based

strictly on established U.S. EPA data validation guidelines where values greater than 90% result in rejection of data.

Note: For samples submitted to meet the regulatory requirements of the SC DHEC, the non-CCC have a warning limit of 40% D and an action limit of 50%D.

10.4.2.6 If a short list of compounds is prepared and/or analyzed for the CCV, each compound must have a % D ≤ 20%. No failures are allowed.

10.4.2.7 If the Continuing Calibration Verification (CCV) fails acceptance criteria verify the instrument is performing properly.

10.4.2.7.1 Check gas flow

10.4.2.7.2 Check syringe

10.4.2.7.3 See section 9.7 for possible corrective action.

10.4.2.8 If continuing calibration acceptance criteria cannot be met after inspection and normal maintenance, a new initial calibration is performed.

10.4.3 CCV Acceptance Criteria for 8270D and Corrective Action

10.4.3.1 Each project compound must have a % D ≤ 20% and meet the minimum response factor listed in Attachment 8.

10.4.3.2 If the decision is made to continue a sequence which have project analytes in the CCV with a % D >20% or do not meet the minimum response factor, a calibration verification standard at or below the reporting limit (i.e. the low point of the calibration) must be run prior the analysis of any samples.

Note**:** Any compounds which fail to meet acceptance criteria may only be used as qualified data and reported as estimated or for screening purposes. In order to report non-detects, adequate sensitivity must be demonstrated at the quantitation limit. This is demonstrated by running a calibration verification standard at or below the reporting limit (i.e. the low point of the calibration). If more than 20 % of the compounds included in the initial calibration fail

corrective action must be initiated prior to the analysis of samples.

10.4.3.**3** If the Continuing Calibration Verification (CCV) fails acceptance criteria verify the instrument is performing properly.

10.4.3.3.1 Check gas flow

10.4.3.3.2 Check syringe

10.4.3.3.3 See **Section** 9.7 for possible corrective action.

10.4.4 Corrective action for CCV:

If continuing calibration acceptance criteria cannot be met after inspection and normal maintenance, a new initial calibration is performed. New standard preparation may be necessary.

11.0 Procedure

Documentation must follow the requirements in Quality Control SOP 13.6, "Proper Documentation Procedures". The run log (Attachment 3) must contain the date and time of the injection, the volume of the extract injected, standard identification numbers, sample identification numbers, Case/SDG numbers, any comment relevant to the injection, and any preventive maintenance performed. Condition codes, abbreviations defined in attachment 9, are used to document failed and qualified injections. Preventive maintenance includes clipping the front-end of the column, changing liners and septum. Any major maintenance, i.e., changing the source or column, is recorded in the instrument maintenance logbook.

11.1 Calibrate the GC/MS as outlined in section 10.0

11.2 Instrument settings

11.2.1 GC Conditions

- Injector — Split/Splitless
- Carrier Gas — Helium
- Injection Port Temp (°C) — 280 – 320
- Sweep Flow (ml/min) — 100
- Column Flow (ml/min) — 1.5 – 2.7
- Initial Temp (°C) — 40
- Hold (min) — 2
- Ramp Rate (°C/min) — 15 – 25

- Final Temp (°C) 305 – 315
- Hold (min) 2 – 7
- Transfer Line Temp (°C) 280 – 310

Note: GC conditions may vary with regular instrument maintenance.

11.2.2 Mass Spectrometer Scanning parameters

- Low Mass: 35 amu
- High Mass: 500 amu
- Threshold: 150 amu
- Scan time: ≤ 1 second
- Electron energy: 70 volts (nominal)

11.3 Sample Analysis

11.3.1 Allow the sample extracts to equilibrate to room temperature. Aliquot 100 µL of the sample extract and 2.5 µL of internal standard solution (800 ng/µL) into an autosampler vial. Close each vial with a crimp-top cap containing a Teflon® septa. Transfer vials to the instrument's autosampler for analysis. All injections are made using the cold needle injection technique. The injection volume is 2.0 µL and this will yield 40 ng per 2 µL on column of each of the internal standards.

11.3.2 Type the sample information into the autosampler sequence in HP ChemServer and start the analyses. All valid injections must be made within the 12-hour calibration period that begins at the moment of injection of the DFTPP. The DFTPP and each injection thereafter must be recorded on the instrument run log (Attachment 3).

11.4 Sample Processing

11.4.1 Process each sample by entering the sample preparation information from the extraction worksheet into the corresponding field on the Target3 (Einstein) data system.

11.4.2 If any of the internal standards, surrogates, or spike compounds are missing or failing, check the peak integration in "Target Review". Changes can be made in Target Review and EICPs can be generated. Any compound for which manual peak integration has been performed will have an "M" flag displayed on the quantitation report. These entries must be assigned a numerical code and the analyst's initials and the date must appear on each quantitation report page containing an "M" flag. For

multiple "M" flags appearing on a quantitation report page, a bracket encompassing the flags can be used, with a single entry of the initials and date. The department supervisor or a representative of the QA department must approve of all manual integrations performed on all initial and continuing calibration standards. This is documented by initialing and dating each page of the quantitation report of the raw data containing such manual integrations. See Attachment 10 for definitions of manual integration codes.

11.4.3 The GC/MS analyst has the initial review responsibility. The analyst must ensure that the internal standard, surrogate recovery, and spike recovery acceptance criteria are met for each field and QC sample and that all target analyte concentrations are within the calibration range.

11.4.4 If internal standards do not meet acceptance criteria in **Section** 9.0, the sample must be re-injected to confirm a matrix effect or discount a miss-injection.

11.4.5 If surrogates do not meet acceptance criteria in **Section** 9.0 and there are no problems with the surrogate or internal standard solutions, the sample must be reinjected or scheduled for re-extraction and reanalysis. Re-extraction is not needed, if the sample was used as the original for duplicate matrix spikes and those analyses produced similar surrogate recoveries.

11.4.6 If the on-column amount of any target analyte exceeds the initial calibration range, the extract must be diluted, internal standard added, and the sample reinjected.

11.5. Target Compound Identification

11.5.1 The mass spectrum of the sample compound and a laboratory library-generated spectrum must match according to the following criteria.

- All ions present in the library mass spectrum at a relative intensity >10% must be present in the sample spectrum.
- The relative intensities of ions specified above must agree within ± 20% between the library and sample spectra.
- Ions >10% in the sample spectrum but not present in the library spectrum must be considered and accounted for. (These ions may be a result of co-eluting/closely-eluting compounds.)

- The RRT (relative retention time) of the sample component must be within ± 0.06 RRT units of the RRT of the standard component.
-

$$RRT = \frac{\text{Retention time of the analyte}}{\text{Retention time of the internal standard}}$$

11.5.2 If a compound analyzed by GC/MS techniques cannot be verified by all of the criteria listed above, but in the technical judgment of the mass spectral interpretation specialist the identification is correct, then the laboratory will report that identification.

11.6 Qualitative Analysis of Non-Target Compounds

11.6.1 Tentatively identify all compounds in the sample that have not already been identified as target compounds, or that are not surrogates, internal standards or volatile target compounds, by performing a computer-generated library search using the NIST 129K.1 mass spectral library (See **Section** 6.5.2). The library search must not be normalized.

11.6.2 Up to 30 tentatively identified compounds (TICs), including alkanes, of the greatest concentration are reported for each sample. The number of TICs required may vary, depending on project requirements.

11.6.3 Rules for making tentative identification:

11.6.3.1 TICs receiving a library search match of 85% or higher are considered a "probable match". Report the compound identified.

11.6.3.2 For TICs receiving more than one library search match of 85% or higher, report the compound with the highest percent match.

11.6.3.3 For TICs receiving two or more library search matches of 85% or higher with the same percent match, report the first compound.

11.6.3.4 For TICs that are isomers receiving library search matches of 85% or higher, report the compound with the highest percent match.

Note: If in the opinion of the experienced analyst/data reviewer there is sound technical evidence not to identify the compound as specified in sections 11.6.3.1 to 11.6.3.4 the justification must be documented in the narrative.

11.6.3.5 TICs receiving a library search match of < 85% are given a tentative identification by the analyst/data reviewer, if possible. If no identification can be made the TIC is reported as "unknown". If possible the unknown is further identified as part of a class of compounds (for example "unknown aromatic").

12.0 Data Analysis and Calculations

Calculations must be consistent with the Quality Control SOP 13.4, "Numerical Data Reduction".

12.1 Calculation of the mean or average of a set of values:

$$\overline{X} = \frac{\sum_{i=1}^{n} X_i}{n}$$

where: n = total number of values

x_i = each individual value used to calculate the mean

$\overline{x}$ = the mean of n

12.2 Calculation of the standard deviation of a set of values:

$$\text{Standard deviation} = \sqrt{\frac{\sum_{i=1}^{n}\left(X_n - \overline{X}\right)^2}{n-1}}$$

12.3 Calculation of percent recovery:

12.3.1 LCS and surrogates:

$$\%R = \frac{Amount\ found}{Amount\ spiked}\ x\ 100$$

12.3.2 Matrix spikes:

$$\%\text{R} = \frac{Amount\ in\ spiked\ sample - Amount\ in\ unspiked\ (native)\ sample}{Amount\ spiked}\ x\ 100$$

12.4 Calculation of % RSD

$$\%RSD = \left(\frac{Standard\ deviation}{\overline{X}}\right) \times 100$$

12.5 Calculation of RPD

$$RPD = \frac{|Value\ 1 - Value\ 2|}{(Value\ 1 + Value\ 2)/2} x100$$

12.6 Calculation of %Difference (%D)

$$\%Diff = \frac{Value - Reference\ value}{Reference\ value} x\ 100$$

12.7 Relative Response Factor

$$RRF = \frac{Ax\ x\ C(is)}{A(is)\ x\ Cx}$$

where: Ax = Area of the characteristic ion (EICP) for the compound to be measured
A(is) = Area of the characteristic ion (EICP) for the specific internal standard
C(is) = Concentration of the internal standard (in µg/l)
Cx = Concentration of the compound to be measured

12.8 Linear Calibration using Least Squares Regression

General linear equation: $y = ax + b$

where: y = Instrument response (peak area)
a = Slope of the line (coefficient of x)
x = Mass of the analyte in the calibration standard aliquot injected
b = y-intercept

Linear Regression by Least Squares:

$$y_1' = ax_i + b$$

where: b = intercept
x_i = Mass of the analyte in the ith calibration standard aliquot injected
y_1' = calculated response for the ith calibration standard

The sum of the squares of the differences is minimized to obtain a and b:

$$\sum_{i=1}^{N}(y_i - y_1^{'})^2$$

12.9 Correlation Coefficient r:

$$r = \frac{N\left[\sum_{i=1}^{N}(x_i y_i)\right] - \left[\sum_{i=1}^{N}(x_i)\right]\left[\sum_{i=1}^{N}(y_i)\right]}{\sqrt{N\left[\sum_{i=1}^{N}(x_i^2)\right] - \left[\sum_{i=1}^{N}(x_i)\right]^2} - \sqrt{N\left[\sum_{i=1}^{N}(y_i^2)\right] - \left[\sum_{i=1}^{N}(y_i)\right]^2}}$$

Where: r = Correlation Coefficient
N = number of data points (equals 5 in a 5 point curve)
y = response
i = index variable (first data point i = 1)
x = Mass of the analyte in the calibration standard aliquot injected

12.10 Quadratic Calibration (second order: $y = ax^2 + bx + c$) fit in Target

$$y = [n]\left[b + m^1\ (Rsp) + m^2\ (Rsp\text{^}2)\right]$$

where: b = constant
m^1 = multiplier for the unsquared term
m^2 = multiplier for the squared term
x = area of analyte/area of Internal Standard
n = amount of Internal Standard
y = amount in ng on column
Rsp = area of analyte/area of Internal Standard

12.11 Concentration

1211.1 Concentration of aqueous samples by GC/MS analysis

$$\mu g / L = \frac{(Ax)(Is)(Vt)(Df)}{(Ais)(\overline{RRF})(Vo)(Vi)}$$

where: Ax = area of the characteristic ion from the EICP for the compound to be measured

Ais = area of the characteristic ion for the EICP for the internal standard
Is = amount of internal standard injected (ηg)
$\overline{RRF}$ = mean relative response factor from initial calibration standards
Vo = volume of water extracted (mL)
Vi = volume of extract injected (µL)
Vt = volume of the concentrated extract (µL)
Df = dilution factor. If no dilution, Df = 1.0

12.11.2 Concentration of soil samples (dry weight basis) by GC/MS

$$\mu g / kg = \frac{(Ax)(Is)(Vt)(Df)(2.0)}{(Ais)(\overline{RRF})(Vi)(Ws)(D)}$$

where: Ax, Ais, Is, Vt, Vi, $\overline{RRF}$, and Df are the same as given for water
2.0 = GPC factor (if used)
Ws = weight of sample extracted, in grams
D (dry weight)= $\frac{100 - \%\ moisture}{100}$

12.11.3 Concentration of water and soil samples (dry weight basis) by GC/MS using quadratic (second order) fit in Target:

$$y = [n]\left[b + m^1\ (Rsp) + m^2\ (Rsp\text{^}2)\right]$$

where:
b = constant
m^1 = multiplier for the unsquared term
m^2 = multiplier for the squared term
x = area of analyte/area of Internal Standard
n = amount of Internal Standard
y = amount in ng on column
Rsp = area of analyte/area of Internal Standard

Example:
Area of acenapthene = 35659
Area of IS = 613275
b = -0.0909161
m^1 = 9.605304
m^2 = 7.132688
ηg of IS = 250
response = 35659/613275 = 0.058145

Amount in ηg on column =

$$(250\,ng)\left[-0.090916 + 9.605304 \times 0.058145 + 7.132688 \times 0.058145^{\wedge}2\right] = 1229\,ng$$

$$Concentration\ (water)\,\mu g / L = \frac{(y)(Df)(Vt)}{(Vo)(Vi)}$$

$$Concentration\ (soil)\,\mu g / Kg = \frac{(y)(Df)(Uf)(Vt)}{(Vi)(Ws)(D)}$$

where:

Uf = unit of correction for GPC, if used

12.11.4 Concentration of soil samples (dry weight basis) by GC/MS using linear regression analysis:

$$\frac{A_s C_{is}}{A_{is}} = aC_s + b$$

$$C_s = \frac{\left[\frac{A_s C_{is}}{A_{is}} - b\right]}{a}$$

where:
As = Area of the target analyte peak in the sample
Ais = Area of the internal standard peak
Cs = Concentration of the target analyte on column
Cis = Concentration of the internal standard
a = Slope of the line (coefficient of Cs)
b = The intercept

$$Concentration\ \text{(water)}\,\mu g / L = \frac{(Cs)(Df)(Vt)}{(Vo)(Vi)}$$

$$Concentration\ \text{(soil)}\ \mu g / Kg = \frac{(Cs)(Df)(Uf)(Vt)}{(Vi)(Ws)(D)}$$

12.11.5 Concentration of TICs

$$TIC\ Amount\ (\text{water})\ \mu\text{g/L} = \frac{(Area\,TIC)\ x\ Amount(Std)(Df)(Vt)}{(Area\ IS)\ x\ 1(RF)(Vo)(Vi)}$$

$$TIC\ Amount\ (\text{soil})\ \mu\text{g/Kg} = \frac{(Area\,TIC)\ x\ Amount(Std)(Df)(Uf)(Vt)}{(Area\ IS)\ x\ 1(RF)(Vi)(Ws)(D)}$$

where:	Area (TIC)	=	area response from RIC for non-target compound
	Amount (Std)	=	amount of internal standard added to the sample, in µg/L
	Area (IS)	=	area response of the nearest internal standard in the reconstructed ion chromatogram
	1(RF)	=	assumed response factor of 1

12.12 Calculating Dilutions

If a sample concentration exceeds the high level standard a dilution must be performed. Determine a level of dilution that will result in a value within the upper half of the calibration range. This is an acceptable dilution. A 10x dilution is generally performed using 100 µL sample plus 900 µL diluent for a total volume of 1.0 mL. It should be recorded on the run log as "10x (100 uL in 1000 uL)."

12.13 Percent Breakdown of DDT in DFTPP Solution

$$\%\ DDT = \frac{DDD + DDE\ (Summation\ of\ degradation\ peak\ areas)}{DDT + DDD + DDE\ (Summation\ of\ all\ peak\ areas)}\ x\ 100$$

12.14 Tailing Factor for Benzidine and Pentachlorophenol

12.14.1 See the diagram, Attachment 4.

13.0 <u>Method Performance</u>

This method was validated through in-house laboratory studies of method detection limits and precision and accuracy for single analyst. The data are retained by the QA department.

14.0 Pollution Prevention

The solvents used in this procedure pose little threat to the environment when recycled and managed properly. Pollution prevention encompasses any technique that reduces or eliminates the quantity or toxicity of waste at the point of generation. Numerous opportunities for pollution prevention exist in laboratory operation. The EPA has established a preferred hierarchy of environmental management techniques that places pollution prevention as the management option of first choice. Whenever feasible, laboratory personnel should use pollution prevention techniques to address their waste generation. When wastes cannot be feasibly reduced at the source, the Agency recommends recycling as the next best thing. See SOP 12.1, Hazardous Waste Disposal, regarding laboratory procedures for recycling solvent waste streams.

15.0 Waste Management

It is the laboratory's responsibility to comply with all federal, state, and local regulations governing waste management, particularly the hazardous waste identification rules and land disposal restrictions, and to protect the air, water, and land by minimizing and controlling all releases from fume hoods and bench operations. Compliance with all sewage discharge permits and regulations is also required. See SOP 12.1, Hazardous Waste Disposal, regarding laboratory procedures for recycling solvent waste streams.

Samples preserved with HCl, HNO_3, or H_2SO_4 to pH <2 are hazardous and must be handled as hazardous waste.

Refer to the Hazardous Waste Management and Safety SOPs located in the lab.

16.0 References

16.1 Test Methods for Evaluating Solid Waste, Physical/Chemical Methods. SW-846, 3rd Edition, Update 3, December, 1996, Method 8270C

16.2 Standard Methods for the Examination of Water and Wastewater, 20th (1998) Edition, Method 1080

16.3 Code of Federal Register, 40 CFR, Part 136, "Guidelines for Establishing Test Procedures for Priority Pollutants"

16.4 Quality Control SOP 13.6, "Proper Documentation Procedures"

16.5 Quality Control SOP 13.4, "Numerical Data Reduction"

16.6 NELAC Standards, effective July 2003, plus revisions

16.7 QA/G6: Guidance for Preparing Standard Operating Procedures (SOPs) EPA/600/B-07/001, April, 2007.

16.8 CompuChem Quality Manual, Revision **13**, **November 17, 2009**, plus revisions

16.9 Sample Control SOP 4.6, "Storing Samples"

16.10 **Department of Defense Quality Systems Manual for Environmental Laboratories, Version 4.1, 4/22/2009**

16.11 Test Methods for Evaluating Solid Waste, Physical/Chemical Methods. SW-846 3rd Edition, Update 4, February, 2007, Method 8270D

17.0 Attachments as Tables, Diagrams, Flowcharts

17.1 Attachment 1 – Target Compounds, Corresponding Internal Standards, and Quantitation Ions

17.2 Attachment 2 – Additional Appendix IX Analytes

17.3 Attachment 3 – Semivolatile Instrument Run Log

17.4 Attachment 4 - Peak Tailing Factor Demonstration

17.5 Attachment 5 - In-house LCS Control Limits

17.6 Attachment 6 – DOD-QSM LCS Control Limits

17.8 Attachment 7 - Matrix Spike Relative Percent Differences

17.9 Attachment 8 - Minimum Response Factors for 8270D

17.10 Attachment 9 - Condition Codes

17.11 Attachment 10 - Definitions of Manual Integration Codes

Attachment 1
8270 Compounds

Compounds	Internal Standard	Primary Quantitation Ion	Secondary Quantitation Ion(s)
1,4-dichlorobenzene-d_4 *	1	152	150, 115
2-Fluorophenol $	1	112	64, 92
Phenol-d_5 $	1	99	71, 42
N-Nitrosodimethylamine	1	42	74, 43
Pyridine	1	79	52, 78
Benzaldehyde	1	77	105,106
Phenol	1	94	66, 65
bis(2-Chloroethyl)ether	1	93	95, 63
2-Chlorophenol	1	128	130, 64
1,3-Dichlorobenzene	1	146	148, 111
1,4-Dichlorobenzene	1	146	148, 111
Benzyl alcohol	1	108	77, 79
1,2-Dichlorobenzene	1	146	148, 111
2-Methylphenol	1	107	108, 77
2,2'-oxybis[1-chloropropane]	1	45	121, 77
Acetophenone	2	105	77, 51
3/4-Methylphenol	1	107	108, 77
N-Nitroso-di-n-propylamine	1	70	130, 42
Hexachloroethane	1	117	201, 199
Naphthalene-d_8 *	2	136	68, 137
Nitrobenzene-d_5 $	2	82	128, 54
Nitrobenzene	2	77	123, 65
Vernolate	2	128	86, 146
Isophorone	2	82	138, 95
2,4-Dimethylphenol	2	122	107, 121
2-Nitrophenol	2	139	109, 65
2,4-Dimethylphenol	2	122	107, 121
bis(2-Chloroethoxy)methane	2	93	95, 123
2,4-Dichlorophenol	2	162	164, 98
1,2,4-Trichlorobenzene	2	180	182, 145
Naphthalene	2	128	129, 127
4-Chloroanaline	2	127	129, 65
Hexachlorobutadiene	2	225	227, 223
Caprolactam	2	113	55, 56
4-Chloro-3-methylphenol	2	107	144, 142
2-Methylnaphthalene	2	141	142, 115
1-Methylnaphthalene	2	142	141, 115
Acenaphthene-d_{10} *	3	164	162, 181
2-Fluorobiphenyl $	3	172	171, 174

Attachment 1 (continued)
8270 Compounds

Compounds	Internal Standard	Primary Quantitation Ion	Secondary Quantitation Ion(s)
2,4,6-Tribromophenol $	3	330	332, 141
Hexachlorocyclopentadiene	3	237	272, 235
2,4,6-Trichlorophenol	3	196	198, 200
2,4,5-Trichlorophenol	3	196	198, 200
1,1-Biphenyl	3	154	153, 76
2-Chloronaphthalene	3	162	164, 127
Phenyl Ether	3	170	141, 77
2-Nitroaniline	3	65	138, 92
Dimethyl phthalate	3	163	194, 164
2,6-Dinitrotoluene	3	165	63, 89
Acenaphthylene	3	152	151, 153
3-Nitroaniline	3	138	92, 108
Acenaphthene	3	154	153, 152
2,4-Dinitrophenol	3	184	154,63
4-Nitrophenol	3	139	109, 65
2,4-Dinitrotoluene	3	165	89, 63
Dibenzofuran	3	168	139, 169
Diethyl phthalate	3	149	177, 150
4-Chlorophenyl phenyl ether	3	204	206, 141
Fluorene	3	166	165, 167
4-Nitroaniline	3	138	108, 65
Phenanthrene-d_{10} *	4	188	94, 80
4,6-Dinitro-2-methylphenol	4	198	51, 105
N-Nitrosodiphenylamine[1]	4	169	168, 167
1,2-Diphenylhydrazine[2]	4	77	182, 105
4-Bromophenyl phenyl ether	4	248	250, 141
Hexachlorobenzene	4	284	249, 142
Atrazine	4	200	173, 215
Pentachlorophenol	4	266	268, 264
Phenanthrene	4	178	176, 89
Anthracene	4	178	176, 89
Carbazole	4	167	166, 139
Di-n-butyl phthalate	4	149	150, 104
Fluoranthene	4	202	101, 203
Chrysene-d_{12} *	5	240	120, 236
Benzidine	5	184	185, 92
Pyrene	5	202	200,203

ORIGINAL MASTER COPY CONTROLLED COPY
If words above are not highlighted, this is an uncontrolled copy of this document.

Attachment 1 (continued)
8270 Compounds

Compounds	Internal Standard	Primary Quantitation Ion	Secondary Quantitation Ion(s)
Butylbenzyl phthalate	5	149	206, 91
3,3'-Dichlorobenzidine	5	252	254, 126
Bis(2-ethylhexyl) phthalate	5	149	167, 279
Benzo(a)anthracene	5	228	226, 229
Chrysene	5	228	226, 229
Perylene-d_{12} *	6	264	260, 265
Terphenyl-d_{14} $	5	244	122, 212
Di-n-octyl phthalate	6	149	167, 4
Benzo(b)fluoranthene	6	252	253, 125
Benzo(k)fluoranthene	6	252	253, 125
Benzo(a)pyrene	6	252	253, 125
Indeno(1,2,3-c,d)pyrene	6	276	138, 277
Dibenzo(a,h)anthracene	6	278	139, 279
Benzo(g,h,i)perylene	6	276	138, 277

$ Surrogate
* Internal Standard
[1] N-nitrosodiphenylamine decomposes diphenylamine
[2] 1,2-diphenylhydrazine decomposes to azobenzene

Attachment 2
Appendix IX Compounds (includes additional non-routine/project-specific analytes)

Compounds	Internal Standard	Primary Quantitation Ion	Secondary Quantitation Ion(s)
1,4-dichlorobenzene-d_4 *	1	152	150, 115
2-Fluorophenol $	1	112	64, 92
Phenol-d_5 $	1	99	71, 42
N-Nitrosodimethylamine	1	42	74, 43
Pyridine	1	79	52, 78
Ethylmethacrylate	1	69	99, 114
2-Picoline	1	93	66, 92
N-Nitrosomethylethylamine	1	88	56, 71
Methyl Methanesulfonate	1	80	79, 65
N-Nitrosodiethylamine	1	102	56, 42
Ethyl Methanesulfonate	1	79	109, 97
Phenol	1	94	66, 65
Aniline	1	93	66, 65
Pentachloroethane	1	167	165, 117
Bis(2-Chloroethyl)ether	1	93	95, 63
2-Chlorophenol	1	128	130, 64
1,3-Dichlorobenzene	1	146	148, 111
1,4-Dichlorobenzene	1	146	148, 111
Benzyl alcohol	1	108	77, 79
1,2-Dichlorobenzene	1	146	148, 111
2-Methylphenol	1	108	107, 77
2,2'-oxybis[1-chloropropane]	1	45	121, 77
N-Nitrosopyrrolidine	1	100	41, 68
3/4-Methylphenol	1	107	108, 77
Acetophenone	2	105	77, 51
N-Nitroso-di-n-propylamine	1	70	130, 42
o-Toluidine	1	106	107, 77
Hexachloroethane	1	117	201, 199
Naphthalene-d_8 *	2	136	68, 137
Nitrobenzene-d_5 $	2	82	128, 54
Nitrobenzene	2	77	123, 65
N-Nitrosopiperidine	2	114	55, 42
Isophorone	2	82	138, 95
2-Nitrophenol	2	139	109, 65
2,4-Dimethylphenol	2	122	107, 121
Benzoic Acid	2	122	105, 77
Bis(2-chloroethoxy)methane	2	93	95, 123
2,4-Dichlorophenol	2	162	164, 98
1,2,4-Trichlorobenzene	2	180	182, 145
Naphthalene	2	128	129, 127

Attachment 2 (continued)
Appendix IX Compounds (includes additional non-routine/project-specific analytes)

Compounds	Internal Standard	Primary Quantitation Ion	Secondary Quantitation Ion(s)
4-Chloroanaline	2	127	129, 65
2,6-Dichlorophenol	2	162	164, 126
Hexachloropropene	2	213	215, 211
Hexachlorobutadiene	2	225	227, 223
N-Nitroso-di-n-butylamine	2	84	57, 41
p-Phenylenediamine	2	108	80, 54
4-Chloro-3-methylphenol	2	107	144, 142
Safrole	2	162	104, 77
2-Methylnaphthalene	2	141	142, 115
1-Methylnaphthalene	2	142	141, 115
Acenaphthene-d_{10} *	3	164	162, 181
2-Fluorobiphenyl $	3	172	171, 174
2,4,6-Tribromophenol $	3	330	332, 141
Hexachlorocyclopentadiene	3	237	272, 235
2,4,6-Trichlorophenol	3	196	198, 200
2,4,5-Trichlorophenol	3	196	198, 200
Isosafrole	3	162	104, 131
2-Chloronaphthalene	3	162	164, 127
2-Nitroaniline	3	65	138, 92
1,4-Naphthoquinone	3	158	102, 104
Dimethylphthalate	3	163	194, 164
1,3-Dinitrobenzene	3	168	76, 50
2,6-Dinitrotoluene	3	165	63, 89
Acenaphthylene	3	152	151, 153
3-Nitroaniline	3	138	92, 108
Acenaphthene	3	154	153, 152
2,4-Dinitrophenol	3	184	154,63
4-Nitrophenol	3	139	109, 65
Pentachlorobenzene	3	250	252, 108
2,4-Dinitrotoluene	3	165	89, 63
Dibenzofuran	3	168	139, 169
1-Naphthylamine	3	143	115, 89
2,3,4,6-Tetrachlorophenol	3	232	166, 230
2-Naphthylamine	3	143	115, 116
Diethyl phthalate	3	149	177, 150
Zinophos	3	97	143, 77
4-Chlorophenyl-phenyl ether	3	204	206, 141
5-Nitro-o-toluidine	3	152	77, 79
Fluorene	3	166	165, 167
4-Nitroaniline	3	138	108, 65
Phenanthrene-d_{10} *	4	188	94, 80
4,6-Dinitro-2-methylphenol	4	198	51, 105
N-Nitrosodiphenylamine[1]	4	169	168, 167

Attachment 2 (continued)
Appendix IX Compounds (includes additional non-routine/project-specific analytes)

Compounds	Internal Standard	Primary Quantitation Ion	Secondary Quantitation Ion(s)
1,2-Diphenylhydrazine[2]	4	77	182, 105
Sulfotep	4	322	202, 75
1,3,5-Trinitrobenzene	4	75	213, 74
Diallate (trans)	4	86	234, 43
Phoroate	4	75	121, 97
Phenacetin	4	108	180, 179
Diallate (cis)	4	86	234, 43
4-Bromophenyl- phenyl ether	4	248	250, 141
Hexachlorobenzene	4	284	249, 142
Dimethoate	4	87	125, 93
4-Aminobiphenyl	4	169	168, 170
Pentachlorophenol	4	266	268, 264
Pentachloronitrobenzene	4	237	214, 142
Pronamide	4	173	175, 145
Disulfoton	4	88	97, 89
Phenanthrene	4	178	176, 89
Anthracene	4	178	176, 89
Carbazole	4	167	166, 139
Methyl parathion	4	109	125, 263
Di-n-butyl phthalate	4	149	150, 104
Parathion	4	109	97, 291
4-Nitroquinoline-1-oxide	4	174	101, 128
Methapyrilene	4	97	191, 50
Isodrin	4	193	66, 195
Fluoranthene	4	202	101, 203
Chrysene-d_{12} *	5	240	120, 236
Benzidine	5	184	185, 92
Pyrene	5	202	200,203
p-Dimethylaminoazobenzene	5	225	120, 77
Chlorobenzilate	5	251	139, 253
Kepone	5	272	274, 237
Famfur	5	237	218, 93
Butylbenzyl phthalate	5	149	206, 91
3,3'-Dimethylbenzidine	5	212	106, 196
2-Acetylaminofluorene	5	181	180, 223
3,3'-Dichlorobenzidine	5	252	254, 126
Bis(2-ethylhexyl) phthalate	5	149	167, 279
Benzo(a)anthracene	5	228	226, 229
Chrysene	5	228	226, 229
Perylene-d_{12} *	6	264	260, 265
Terphenyl-d_{14} $	5	244	122, 212
Di-n-octyl phthalate	6	149	167, 4
Benzo(b)fluoranthene	6	252	253, 125

Attachment 2 (continued)
Appendix IX Compounds (includes additional non-routine/project-specific analytes)

Compounds	Internal Standard	Primary Quantitation Ion	Secondary Quantitation Ion(s)
Benzo(k)fluoranthene	6	252	253, 125
Benzo(a)pyrene	6	252	253, 125
Indeno(1,2,3-c,d)pyrene	6	276	138, 277
Dibenzo(a,h)anthracene	6	278	139, 279
Benzo(g,h,i)perylene	6	276	138, 277

$ Surrogate
* Internal Standard
[1] N-nitrosodiphenylamine decomposes diphenylamine
[2] 1,2-diphenylhydrazine decomposes to azobenzene

Attachment 3

COMPUCHEM a Division of Liberty Analytical Corp DATE ___/___/___INITIAL TIME OF TUNE_____ SHIFT/S (A) ____(B)_____(C)____
GC/MS SEMIVOLATILE RUN LOG TIME TUNE EXPIRES_____ METHOD_____
LOGBOOK 4X(4) 18 (5972hp66)

PREVENTIVE MAINTENANCE_____

	SEQUENCE#	REJECTED	FILENAME	REPORTED	DATE	TIME	CLIENT ID	SDG#	AMOUNT INJECTED	CHEMIST	COMMENTS
1					/ /						
2					/ /						
3					/ /						
4					/ /						
5					/ /						
6					/ /						
7					/ /						
8					/ /						
9					/ /						
10					/ /						
11					/ /						
12					/ /						
13					/ /						
14					/ /						
15					/ /						
16					/ /						
17					/ /						
18					/ /						
19					/ /						
20					/ /						
21					/ /						
22					/ /						
23					/ /						
24					/ /						

DFTPP Lot #/Exp. Date: _____ Calibration STD Lot#/Exp. Date: _____ Internal STD Lot#/Exp. Date: _____ Methylene Chloride Lot#/Exp. Date: _____ Column Type: _____

The presence of the Chemist's/Analyst's employee ID number, or signature, on this run log attests that strict compliance with the method's SOP has occurred. Any SOP deviations require documentation by the responsible chemist/analyst together with the chemist's/analyst's initials and the initials of the lab supervisor and a QA department representative, signifying approval of the deviation.

REVIEWED BY: _____ DATE _____
5/5/08: vr

Attachment 4

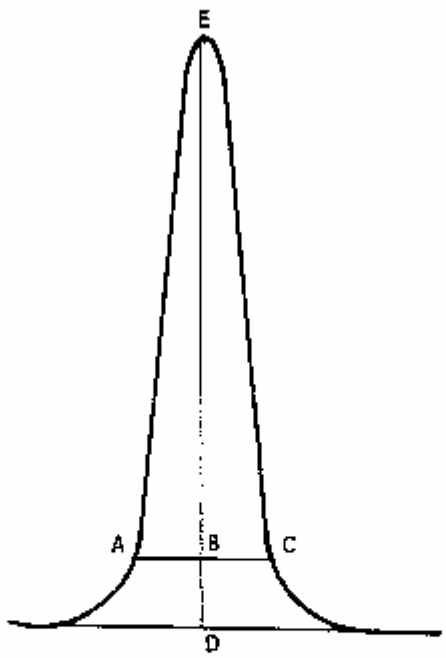

TAILING FACTOR= $\frac{BC}{AB}$

Example calculation: Peak Height = DE = 100 mm
10% Peak Height = BD = 10 mm
Peak Width at 10% Peak Height = AC = 23 mm
AB = 11 mm
BC = 12 mm

Therefore: Tailing Factor = $\frac{12}{11}$ = 1.1

Tailing factor calculation.

Attachment 5

In-House LCS Recovery Limits

Semivolatile Compound	Soil (% Recovery)	Marginal Exceedance (% Recovery)
N-Nitrosodimethylamine	20-118	10-135
Pyridine	20-100	10-160
Benzaldehyde	20-100	10-160
Phenol	38-112	26-123
bis (2-Chloroethyl)ether	30-112	16-125
2-Chlorophenol	30-100	10-160
1,3-Dichlorobenzene	21-104	10-118
1,4-Dichlorobenzene	21-104	10-118
Benzyl alcohol	40-107	29-118
1,2-Dichlorobenzene	24-108	10-122
2-Methylphenol	42-110	30-121
2,2'-Oxybis (1-chloropropane)	24-107	10-121
Acetophenone	32-105	20-117
3/4-Methylphenol	38-114	26-127
n-Nitroso-di-n-propylamine	23-130	10-147
Hexachloroethane	20-105	10-120
Nitrobenzene	20-135	10-156
Isophorone	39-114	27-126
2-Nitrophenol	33-119	19-133
2,4-Dimethylphenol	43-117	31-130
bis (2-Chloroethoxy)methane	39-107	24-118
2,4-Dichlorophenol	42-119	29-132
1,2,4-Trichlorobenzene	32-112	19-126
Naphthalene	38-118	24-132
4-Chloroaniline	26-129	10-146
Hexachlorobutadiene	31-118	16-132
Caprolactam	45-122	32-134
4-Chloro-3-methylphenol	46-120	34-132
2-Methylnaphthalene	39-111	27-123
1-Methylnaphthalene	39-112	27-124
Hexachlorocyclopentadiene	20-134	10-160
2,4,6-Trichlorophenol	46-127	33-141
2,4,5-Trichlorophenol	52-122	40-134
1,1'-Biphenyl	42-116	30-126
2-Chloronaphthalene	11-112	33-123
2-Nitroaniline	50-109	40-118

ORIGINAL MASTER COPY CONTROLLED COPY
If words above are not highlighted, this is an uncontrolled copy of this document.

Attachment 5 (continued)

In-House LCS Recovery Limits

Semivolatile Compound	Soil (% Recovery)	Marginal Exceedance (% Recovery)
Dimethylphthalate	50-120	39-132
2,6-Dinitrotoluene	47-119	35-131
Acenaphthylene	50-125	38-137
3-Nitroaniline	43-100	34-160
Acenaphthene	50-126	37-138
2,4-Dinitrophenol	20-121	10-140
4-Nitrophenol	26-145	10-160
2,4-Dinitrotoluene	50-125	37-137
Dibenzofuran	47-116	36-127
Diethylphthalate	51-123	39-135
4-Chlorophenyl-phenylether	52-123	40-135
Fluorene	52-128	40-141
4-Nitroaniline	42-100	32-160
4,6-Dinitro-2-methylphenol	32-127	16-143
n-Nitrosodiphenylamine	46-125	33-125
1,2-Diphenylhydrazine	48-110	38-110
4-Bromophenyl-phenylether	53-122	42-134
Hexachlorobenzene	49-126	36-139
Atrazine	22-100	10-160
Pentachlorophenol	35-132	19-148
Phenanthrene	51-129	38-143
Carbazole	45-135	30-150
Anthracene	53-136	40-149
di-n-Butylphthalate	49-121	37-133
Fluoranthene	56-134	43-147
Benzidine	20-150	10-160
Pyrene	48-136	34-151
Butylbenzylphthalate	42-137	36-153

ORIGINAL MASTER COPY CONTROLLED COPY
If words above are not highlighted, this is an uncontrolled copy of this document.

Attachment 5 (continued)

In-House LCS Recovery Limits

Semivolatile Compound	Soil (% Recovery)	Marginal Exceedance (% Recovery)
3,3'-Dichlorobenzidine	21-100	10-160
Bis (2-Ethylhexyl) phthalate	37-133	21-149
Benzo(a)anthracene	57-134	44-147
Chrysene	53-135	39-148
Di-n-Octylphthalate	43-138	26-154
Benzo(b)fluoranthene	48-130	35-143
Benzo(k)fluoranthene	61-141	47-155
Benzo(a)pyrene	60-131	48-142
Indeno(1,2,3-cd)pyrene	47-137	32-152
Dibenz(a,h)anthracene	51-127	38-139
Benzo(g,h,i)perylene	43-129	29-142

Note: LCS recovery limits are based on in-house performance statistics. A subset of analytes may be reported, depending on project requirements. While the limits were statistically derived, from actual laboratory data, it is expected that a minimum of 40% recovery is achieved for the vast majority of analytes.

Attachment 5 (continued)

Semivolatile Compound	Aqueous (% Recovery)	Marginal Exceedance (% Recovery)
N-Nitrosodiphenylamine	20-100	10-120
Pyridine	20-100	10-120
Benzaldehyde	20-100	10-117
Phenol	20-100	10-120
bis (2-Chloroethyl)ether	31-100	20-120
2-Chlorophenol	23-100	15-120
1,3-Dichlorobenzene	24-100	13-120
1,4-Dichlorobenzene	25-100	15-120
Benzyl alcohol	29-100	19-120
1,2-Dichlorobenzene	27-100	16-101
2-Methylphenol	25-100	13-120
2,2'-Oxybis (1-chloropropane)	24-100	13-120
Acetophenone	39-100	29-105
3/4-Methylphenol	24-100	15-120
N-Nitroso-di-n-propylamine	34-101	23-112
Hexachloroethane	28-100	18-120
Nitrobenzene	20-131	10-150
Isophorone	43-105	32-115
2-Nitrophenol	39-103	28-113
2,4-Dimethylphenol	19-109	10-120
bis (2-Chloroethoxy)methane	35-110	25-106
2,4-Dichlorophenol	39-103	28-113
1,2,4-Trichlorobenzene	36-101	25-111
Naphthalene	40-104	29-114
4-Chloroaniline	25-115	10-130
Hexachlorobutadiene	29-103	17-115
Caprolactam	20-100	10-120
4-Chloro-3-methylphenol	41-103	30-113
2-Methylnaphthalene	40-100	30-110
1-Methylnaphthalene	39-100	29-109
Hexachlorocyclopentadiene	20-123	10-143
2,4,6-Trichlorophenol	46-113	35-124
2,4,5-Trichlorophenol	41-119	29-132
1,1'-Biphenyl	49-109	36-119
2-Chloronaphthalene	46-105	36-115
2-Nitroaniline	34-107	22-119

Attachment 5 (continued)

Semivolatile Compound	Aqueous (% Recovery)	Marginal Exceedance (% Recovery)
Dimethylphthalate	53-116	43-127
2,6-Dinitrotoluene	51-115	40-126
Acenaphthylene	50-115	39-126
3-Nitroaniline	20-110	10-125
Acenaphthene	53-118	43-128
2,4-Dinitrophenol	20-102	10-118
4-Nitrophenol	10-100	10-120
2,4-Dinitrotoluene	52-119	41-131
Dibenzofuran	50-107	41-129
Diethylphthalate	52-118	45-111
4-Chlorophenyl-phenylether	51-117	40-128
Fluorene	53-121	41-132
4-Nitroaniline	20-110	10-129
4,6-Dinitro-2-methylphenol	38-116	25-129
N-Nitrosodiphenylamine	52-117	41-127
1,2-Diphenylhydrazine	38-105	27-117
4-Bromophenyl-phenylether	51-115	41-125
Hexachlorobenzene	52-116	41-126
Atrazine	20-100	10-120
Pentachlorophenol	20-100	10-150
Phenanthrene	56-121	45-131
Carbazole	39-115	27-127
Anthracene	55-127	43-139
Di-n-butylphthalate	51-114	41-124
Fluoranthene	58-124	47-134
Benzidine	20-150	10-160
Pyrene	48-131	34-145
Butylbenzylphthalate	41-118	28-131

ORIGINAL MASTER COPY CONTROLLED COPY
If words above are not highlighted, this is an uncontrolled copy of this document.

Attachment 5 (Continued)

Semivolatile Compound	Aqueous (% Recovery)	Marginal Exceedance (% Recovery)
3,3'-Dichlorobenzidine	20-100	10-120
Bis (2-Ethylhexyl) phthalate	47-121	35-133
Benzo(a)anthracene	53-128	41-140
Chrysene	50-130	36-143
Di-n-octylphthalate	30-148	10-160
Benzo(b)fluoranthene	41-130	26-145
Benzo(k)fluoranthene	39-150	19-160
Benzo(a)pyrene	46-135	31-150
Indeno(1,2,3-cd)pyrene	47-138	32-154
Dibenz(a,h)anthracene	47-134	32-148
Benzo(g,h,i)perylene	42-132	27-147

Attachment 6

LCS Control Limits for 8270C required by the DoD-QSM

Compound	Aqueous Recovery Limits	Aqueous Marginal Exceedance	Solid Recovery Limits	Solid Marginal Exceedance
n-Nitrosodiphenylamine	50-110	35-120	50-115	40-125
Phenol	0-115	0-135	40-100	30-110
Bis(2-chloroethyl]ether	35-110	25-120	40-105	25-115
2-Chlorophenol	35-105	25-115	45-105	35-115
1,3-Dichlorobenzene	30-100	20-110	40-100	30-110
1,4-Dichlorobenzene	30-110	20-110	35-105	25-115
Benzyl alcohol	30-110	15-125	20-125	10-140
1,2-Dichlorobenzene	35-100	20-115	45-95	35-105
2-Methylphenol	40-110	25-120	40-105	30-115
2,2'-oxybis[1-chloropropane]	25-130	10-150	20-115	10-130
3/4-Methylphenol	30-110	20-125	40-105	30-120
n-Nitroso-di-n-propylamine	35-130	20-145	40-115	30-125
Hexachloroethane	30-95	15-105	35-110	20-120
Nitrobenzene	45-110	35-120	40-115	30-125
Isophorone	50-110	40-125	45-110	30-125
2-Nitrophenol	40-115	25-125	40-110	30-120
2,4-Dimethylphenol	30-110	15-125	30-105	20-115
Bis[2-chloroethoxy]methane	45-105	35-115	45-110	30-120
2,4-Dichlorophenol	50-105	40-115	45-110	35-120
1,2,4-Trichlorobenzene	35-105	25-120	45-110	30-110
Naphthalene	40-110	30-115	40-105	30-120
4-Chloroaniline	15-110	10-125	10-95	0-110
Hexachlorobutadiene	25-105	15-115	40-115	25-130
4-Chloro-3-methylphenol	45-110	35-120	45-115	35-125
2-Methylnaphthalene	45-105	35-115	45-105	30-115
2,4,6-Trichlorophenol	50-115	40-125	50-115	40-120
2,4,5-Trichlorophenol	50-110	40-120	50-110	40-120
2-Chloronaphthalene	50-105	40-115	50-105	40-115
2-Nitroaniline	50-115	35-125	50-115	35-125
Dimethylphthalate	25-125	10-145	25-125	10-145
2,6-Dinitrotoluene	50-115	35-130	50-115	35-130
Acenaphthylene	50-105	40-115	50-105	40-115
3-Nitroaniline	20-125	10-145	20-125	10-145
Acenaphthene	45-110	35-120	45-110	35-120
2,4-Dinitrophenol	15-140	10-160	15-130	10-150
4-Nitrophenol	0-125	0-145	15-140	10-160
2,4-Dinitrotoluene	20-120	40-130	50-115	35-130
Dibenzofuran	55-105	45-115	50-105	40-110
Diethyl phthalate	40-120	30-130	50-105	40-125
4-Chlorophenyl-phenylether	50-110	40-120	45-115	35-125
Fluorene	50-110	40-120	50-110	40-115
4-Nitroaniline	35-120	20-130	35-115	20-125
4,6-Dinitro-2-methylphenol	40-130	25-145	20-135	10-155

ORIGINAL MASTER COPY CONTROLLED COPY
If words above are not highlighted, this is an uncontrolled copy of this document.

Attachment 6 (continued)

Compound	Aqueous Recovery Limits	Aqueous Marginal Exceedance	Solid Recovery Limits	Solid Marginal Exceedance
1,2-Diphenylhydrazine	55-115	45-120	N/A	N/A
4-Bromophenyl-phenylether	50-115	40-125	45-115	35-130
Hexachlorobenzene	50-110	40-120	45-120	35-130
Pentachlorophenol	40-115	25-130	25-120	10-135
Phenanthrene	50-115	40-130	50-110	40-120
Carbazole	50-115	35-130	45-115	30-130
Anthracene	55-110	45-120	55-105	45-115
Di-n-butyl phthalate	55-115	45-125	55-110	45-120
Fluoranthene	55-115	45-125	55-115	45-120
Pyrene	50-130	35-140	45-125	35-135
Butyl benzyl phthalate	45-115	35-130	50-125	35-135
3,3'-Dichlorobenzidine	20-110	10-125	10-130	0-145
Bis[2-ethylhexyl]phthalate	40-125	30-140	45-125	35-140
Benzo[a]anthracene	45-120	35-130	50-110	40-120
Chrysene	55-110	45-120	55-110	45-120
Di-n-octyl phthalate	35-135	20-155	40-130	25-145
Benzo[b]fluoranthene	45-120	35-130	45-115	35-125
Benzo[k]fluoranthene	45-125	30-135	45-125	30-135
Benzo[a]pyrene	55-110	45-120	50-110	40-120
Indeno[1,2,3-cd]pyrene	45-125	30-140	40-125	25-140
Dibenz[a,h]anthracene	40-125	30-140	40-125	25-140
Benzo [g,h,i]perylene	40-125	25-135	40-125	25-140

Surrogate recovery limits for 8270C required by the DoD-QSM

Compound	Aqueous (% Recovery)	Soil (% Recovery)
Nitrobenzene-d_5	40-110	35-100
2-fluorobiphenyl	50-110	45-105
Terphenyl-d_{14}	50-135	30-125
Phenol-d_5	N/A	40-100
2-fluorophenol	20-110	35-105
2,4,6-tribromophenol	40-125	35-125

Attachment 7

Matrix Spike Relative Percent Differences

Semivolatile Compound	Aqueous	Solid
N-Nitrosodiphenylamine	50	50
Pyridine	50	50
Benzaldehyde	50	42
Phenol	46	39
bis (2-Chloroethyl)ether	46	39
2-Chlorophenol	42	37
1,3-Dichlorobenzene	50	47
1,4-Dichlorobenzene	50	46
Benzyl alcohol	41	36
1,2-Dichlorobenzene	50	42
2-Methylphenol	50	32
2,2'-Oxybis (1-chloropropane)	48	40
Acetophenone	47	41
3/4-Methylphenol	50	40
N-Nitroso-di-n-propylamine	50	42
Hexachloroethane	50	43
Nitrobenzene	44	37
Isophorone	50	40
2-Nitrophenol	47	39
2,4-Dimethylphenol	50	31
2,4-Dinitrophenol	50	46
4-Nitrophenol	50	35
2,4-Dinitrotoluene	44	34
Dibenzofuran	45	33
Diethylphthalate	45	31
4-Chlorophenyl-phenylether	47	33
Fluorene	49	32
4-Nitroaniline	50	42
4,6-Dinitro-2-methylphenol	50	38
N-Nitrosodiphenylamine	50	31
1,2-Diphenylhyhydrazine	50	28
4-Bromophenyl-phenylether	47	37
Hexachlorobenzene	42	32
Atrazine	50	31
Pentachlorophenol	50	48
Phenanthrene	50	33

ORIGINAL MASTER COPY CONTROLLED COPY
If words above are not highlighted, this is an uncontrolled copy of this document.

Attachment 7 (continued)

Matrix Spike Relative Percent Differences

Semivolatile Compound	Aqueous	Solid
Anthracene	50	31
Carbazole	50	32
Di-n-butylphthalate	40	29
Fluoranthene	50	36
Benzidine	50	50
Pyrene	50	31
Butyl benzylphthalate	48	27
3,3'-Dichlorobenzidine	50	50
Bis (2-ethylhexyl)phthalate	49	44
Benzo(a)anthracene	50	35
Chrysene	50	35
Di-n-octylphthalate	50	33
Benzo(b)fluoranthene	50	39
Benzo(k)fluoranthene	50	40
Benzo(a)pyrene	50	29
Indeno(1,2,3-cd)pyrene	50	29
Dibenzo(a,h)anthracene	50	31
Benzo(g,h,i)perylene	50	31

ORIGINAL MASTER COPY CONTROLLED COPY
If words above are not highlighted, this is an uncontrolled copy of this document.

Attachment 8

Minimum Response Factors for 8270D

Semivolatile Compound	Minimum Response Factor
Benzaldehyde	0.010
Phenol	0.800
bis (2-Chloroethyl)ether	0.700
2-Chlorophenol	0.800
2-Methylphenol	0.700
2,2'-Oxybis (1-chloropropane)	0.010
Acetophenone	0.010
4-Methylphenol	0.600
N-Nitroso-di-n-propylamine	0.500
Hexachloroethane	0.300
Nitrobenzene	0.200
Isophorone	0.400
2-Nitrophenol	0.100
2,4-Dimethylphenol	0.200
bis (2-Chloroethoxy)methane	0.300
2,4-Dichlorophenol	0.200
Naphthalene	0.700
4-Chloroaniline	0.010
Hexachlorobutadiene	0.010
Caprolactam	0.010
4-Chloro-3-methylphenol	0.200
2-Methylnaphthalene	0.400
Hexachlorocyclopentadiene	0.050
2,4,6-Trichlorophenol	0.200
2,4,5-Trichlorophenol	0.200
1,1'-Biphenyl	0.010
2-Chloronaphthalene	0.800
2-Nitroaniline	0.010
Dimethylphthalate	0.010
2,6-Dinitrotoluene	0.200
Acenaphthylene	0.900
3-Nitroaniline	0.010
Acenaphthene	0.900
2,4-Dinitrophenol	0.010
4-Nitrophenol	0.010
Dibenzofuran	0.800
2,4-Dinitrotoluene	0.200
Diethylphthalate	0.010
1,2,4,5-Tetrachlorobenzene	0.010
4-Chlorophenyl-phenylether	0.400

ORIGINAL MASTER COPY CONTROLLED COPY
If words above are not highlighted, this is an uncontrolled copy of this document.

Attachment 8(continued)

Minimum Response Factors for 8270D

Semivolatile Compound	Minimum Response Factor
Fluorene	0.900
4-Nitroaniline	0.010
4,6-Dinitro-2-methylphenol	0.010
4-Bromophenyl-phenylether	0.100
N-Nitrosodiphenylamine	0.010
Hexachlorobenzene	0.100
Atrazine	0.010
Pentachlorophenol	0.050
Phenanthrene	0.700
Anthracene	0.700
Carbazole	0.010
Di-n-butylphthalate	0.010
Fluoranthene	0.600
Pyrene	0.600
Butyl benzylphthalate	0.010
3,3'-Dichlorobenzidine	0.010
Benzo(a)anthracene	0.800
Chrysene	0.700
Bis (2-ethylhexyl)phthalate	0.010
Di-n-octylphthalate	0.010
Benzo(b)fluoranthene	0.700
Benzo(k)fluoranthene	0.700
Benzo(a)pyrene	0.700
Indeno(1,2,3-cd)pyrene	0.500
Dibenzo(a,h)anthracene	0.400
Benzo(g,h,i)perylene	0.500
2,3,4,6-Tetrachlorophenol	0.010

Attachment 9

Condition Codes Used for Documentation in Logbooks

Condition Code	Definition
CS	Contamination Suspected
CT	Contamination Verified
DA	Dilution Acceptable
DI	Requires Dilution
DW	Dilution Wrong
ES	Extraction Same
EF2JS	Ending Standard Failed Second Tune Injection Same
JS	Injection Same
IH	Internals High
IL	Internals Low
IM	Internals Missing
LA	Lab Accident (Must Explain)
OT	Other (Must Explain)
OQ	Original Run Qualified
OW	Original Wrong for QC Sample
RP	Reportable Prior Run
RT	Retention Time Shift
RU	Run Unnecessarily
SF	Spike Recoveries Failed
SH	Surrogate Recoveries Failed High
SI	Spiked Inadvertently
SL	Surrogate Recoveries Failed Low
SM	Surrogate or Spike Missing
IF	Instrument Failure (Must Explain)
US	Unacceptable Standard (Must Explain)
VR	Verify Results (Must Explain)
NM	Did Not Match Prior Run or Duplicate
RN	Reanalyze Neat
PC	Poor Chromatography
WS	Wrong Standard

ORIGINAL MASTER COPY CONTROLLED COPY
If words above are not highlighted, this is an uncontrolled copy of this document.

Attachment 10

CompuChem
a division of Liberty Analytical Corporation

Notification Regarding Manual Editing/Integration Flags

In some instances, manual adjustments to the software output are necessary to provide accurate data. These manual integrations are performed by the data reviewers, GC/MS operators, or GC chemists. An Extracted Ion Current Profile (EICP) or a GC chromatographic peak has been provided for the manual integration performed on each compound to demonstrate the accuracy of that process. The manual integrations are flagged on the quantitation report in the far right column beyond the FINAL concentration for GC/MS analysis, and in the "Flags" column for GC analysis. The manual editing/integration flags are:

M - Denotes that a manual integration has been performed for this compound. The manual integration was performed in order to provide the most accurate area count possible for the peak.

H - Denotes that the data reviewer, GC/MS operator, or GC Chemist has chosen an alternate peak within the retention time window from that chosen by the software for that compound. No manual integration is performed in choosing an alternate peak. The software still performs the integration.

MH - Denotes that an alternate peak has been chosen within the retention time window from that chosen by the software for that compound and also a manual integration of the chosen peak has been performed. The manual integration was performed in order to provide the most accurate area count possible for the peak.

L - Denotes that a data reviewer or GC/MS operator has selected an alternate library search. This is typically done when an additional tentatively identified compound (TIC) has been added to the number of peaks searched. No manual integration is performed in choosing an alternate peak. The software still performs the integration.

ML - Denotes that an alternate library search has been selected and a manual integration has also been performed. This is typically done when an additional TIC has been added and the TIC peak also required a manual integration.

The EPA CLP SOW documents require additional explanations for manual editing/integration. In the accompanying raw data packages, additional codes have been applied to the "M" flag and carry the following meanings;

M1 - The compound was not found by the automatic integration routine.

M2 - The compound was incorrectly integrated by the automatic integration routine.

M3 - The co-eluting compounds were incorrectly integrated by the automatic integration routine.

These codes will appear in the GC/MS and GC raw data.

Revision 7 (12/6/2005)

ORIGINAL MASTER COPY CONTROLLED COPY
If words above are not highlighted, this is an uncontrolled copy of this document.

CompuChem
A Division Of
Liberty Analytical Corp.

501 Madison Avenue
Cary, NC 27513

NELAP accredited

SOP DOCUMENTATION FORM

This form must accompany all new and revised Standard Operating Procedures (SOPs) when you turn them in to Quality Assurance for review. Please fill out the entire block below (except effective date).

This is a new procedure _____ revised procedure ✓ outdated procedure (archive) _____

- Procedure Code: SPP-1080 SOP Section #: 3.2.1.4 Revision #: 4

SOP Title: Digestion Block Preparation of Aqueous Samples for ICP Analysis of total or Dissolved Metals by SW-846, MCAWW, and Standard Methods

Effective date: (QA fills in) 6/10/08

- Procedure prepared by: Yalgena Respass Date: 5/27/08
- Procedure approved by: (If the manager prepared the SOP, a qualified second party should sign) _____ Date: 061008
- Reason for change: periodic review and update
- This procedure meets the requirements of the following approved method references: SW-846, 3rd Edition, Update III, 12/96, 3010A; Methods for Chemical Analysis of Water and Wastes, 3/83, Method 200.7; Standard Methods for the Examination of Water and Wastewater, 20th Edition, 1998

Procedure approved by a QA Representative (unless QA Representative signed above):

_____ Date: _____

On an annual basis: Lab managers are required to review lab practices and revise the SOP if necessary. If no revision is necessary, indicate by your signature that the SOP has been reviewed.

Annual Review—Signature: _____ Date: 062509

Annual Review—Signature: _____ Date: _____

Annual Review—Signature: _____ Date: _____

Annual Review—Signature: _____ Date: _____

Sample Preparation Procedure -1080: Digestion Block Preparation of Aqueous Samples for ICP Analysis of Total or Dissolved Metals by SW-846, MCAWW, **and** Standard Methods

Table of Contents

SECTION	PAGE NO.
Section 1.0 – Scope and Application	2
Section 2.0 – Summary of Method	2
Section 3.0 – Definitions	2-3
Section 4.0 – Interferences	3
Section 5.0 – Safety	4
Section 6.0 – Equipment and Supplies	4
Section 7.0 – Reagents **and** Standards	4-5
Section 8.0 - Sample Preservation **and** Storage	5-6
Section 9.0 – Quality Control	6
Section 10.0 – Calibration **and** Standardization	7
Section 11.0 – Procedure	7-**9**
Section 12.0 – Data Analysis **and** Calculations	10
Section 13.0 – Method Performance	10
Section 14.0 – Pollution Prevention	10
Section 15.0 – Waste Management	10
Section 16.0 – References	**10**-11
Section 17.0 – Attachments as Tables, Diagrams, **and** Flowcharts	**11**
Attachment 1	**12**
Attachment 2	**13-15**
Attachment 3	16
Attachment 4	**17**
Attachment 5	**18**

ORIGINAL MASTER COPY CONTROLLED COPY
If words above are not highlighted, this is an uncontrolled copy of this document.

Sample Preparation Procedure -1080: Digestion Block Preparation of Aqueous Samples for ICP Analysis of Total or Dissolved Metals by SW-846, MCAWW, **and** Standard Methods

1.0 Scope and Application

This **Standard Operating P**rocedure **(SOP)** describes the digestion block preparation of aqueous samples for ICP determination of total or dissolved metals. The procedure is based on SW-846 Method 3010A, Standard Methods for the Examination of Water and Wastewater, 20th Edition **Methods 3030C and 3030F**, and **Methods for Chemical Analysis of Water and Wastes (MCAWW), Method 200.7**. This procedure incorporates a reduced sample aliquot **of one half the normal aliquot (**50-mL**). All** reagent volumes are proportionately reduced by one-half.

Staff members performing the procedures described in this SOP are responsible for reading, understanding, and complying with the SOP requirements. Supervisors are responsible for directing the analyst to the controlled SOP, and providing adequate explanation of the material contained therein.

This procedure is restricted to use by or under the supervision of analysts experienced in the instrumentation or preparative methods and who have demonstrated the ability to generate acceptable results through QC samples and analyst capability studies.

2.0 Summary of Method

To determine total metal concentrations, an accurately measured, well-mixed aliquot of the sample is treated with **HNO_3** and HCl and heated in a continuously monitored digestion block to solubilize all metals. The **resulting** solution is cooled, filtered, and brought to volume for subsequent analysis by ICP.

Samples requiring dissolved metals analysis undergo an initial filtration and preservation, without digestion, prior to analysis.

Samples requiring pretreatment for acid-extractable metals are exposed to a more moderate digestion procedure.

3.0 Definitions

3.1 Method detection limit (MDL) – The minimum concentration of an analyte that can be measured and reported with 99% confidence that the analyte concentration is greater than zero and is determined from analysis of a sample in a given matrix containing the analyte (40 CFR, Part 136, Appendix B.)

3.3 Reporting Units – **µ**g/L for water

3.4 A **Sample Delivery Group (**SDG**)** is defined by the following, whichever is more frequent:

- each 20 field samples received within a case, or
- each 7 calendar day period during which field samples in a case are received (14 calendar days if requested by the client) beginning with the receipt of the first sample.

NOTE: The **DOD-QSM** and SC DHEC do not accept the SDG approach, unless the samples are prepared in a single batch. When a group of up to 20 field samples of a similar matrix are prepared as one batch, method-specified QC samples such as a method blank, laboratory control sample, matrix spike, matrix spike duplicate, and matrix duplicate must also be prepared together. If samples are batched together from different sites, project-specific QC must be processed.

3.5 DOD-QSM – Department of Defense Quality Systems Manual

3.6 SC DHEC – South Carolina Department of Health and Environmental Control

3.7 NCDENR – North Carolina Department of Environment and Natural Resources

4.0 Interferences

4.1 Physical interferences are generally considered to be effects associated with the ICP analysis, especially with samples containing high dissolved solids and/or acid concentrations.

4.2 Chemical interferences are characterized by molecular compound formation, ionization effects, and solute vaporization effects.

4.3 Interferences are highly dependent on matrix type and the specific analyte element. Further detail on managing interferences is found in Instrument Procedure SOP 309, "Inductively Coupled Plasma Atomic Emission Spectroscopy by SW-846."

5.0 Safety

5.1 Appropriate protective equipment and clothing must be used under the assumption that all samples are potentially hazardous. During sample preparation, **safety** glasses, gloves and lab coats are a minimum requirement. The persistent presence of noxious odors may be indicative of failure of the laboratory ventilation system and must be reported to a supervisor or manager.

5.2 Laboratory staff **must** review the Chemical Hygiene Plan for general safety policies, and Material Safety Data Sheets (MSDS) for solvents and reagents used in the laboratory. The **Chemical Hygiene plan and** MSDS are located in the Quality Assurance department.

6.0 Equipment **and** Supplies

6.1 Polypropylene digestion cups-50 mL

6.2 Watch glasses-ribbed

6.3 Environmental Express 36 and 54 well digestion block

6.4 membrane filter - 0.40 to 0.45 µm

7.0 Reagents and Standards

7.1 Reagent Water-All water used during preparation should be reagent-grade Type I with regard to resistivity of > 10 megohm-cm (20th Edition of Standard Methods, Method 1080), and referred throughout this SOP as **reagent** water.

7.2 Nitric acid (HNO_3) -concentrated, ultra-pure grade

7.2.1 Baker "Instra-analyzed" (BIA) or equivalent

7.2.2 Prepare a 1:1 solution by slowly adding the concentrated acid to water under a fume hood in the ratio of 100-mL acid to 100-mL **reagent** water.

7.2.2.1 Always add acid to water.

7.3 Hydrochloric acid (HCl) – concentrated, ultra-pure grade

7.3.1 Baker "Instra-analyzed" (BIA) or equivalent

7.3.2 Prepare a 1:1 solution by slowly adding the concentrated acid to water under the fume hood in the ratio of 100-mL acid to 100-mL **reagent** water.

7.4 **Laboratory Control Sample (LCS) spiking solution**

7.4.1 XCL-LCS-10XA and XCL-LCS-10XB - purchased, certified, aqueous standards for ICP laboratory control sample (LCS)

7.5 **Matrix Spiking Solution**

7.5.1 XCL-20 - purchased, certified, aqueous standard for spiking the MS/MSD for ICP.

7.6 TCLP STD-500 - purchased standard with concentrations at the regulatory limits

7.6.1 **Used** for spiking the TCLP LCS and TCLP MS/MSD

7.7 Silver-100 **µ**g/**mL**, purchased, High Purity Standard

7.7.1 **Used** for spiking the TCLP LCS and TCLP MS/MSD

7.8 All purchased chemicals and reagents that do not arrive with an expiration date, must be assigned an expiration date three years from receipt. All lab prepared re**a**gents must be assigned an expiration date one year from preparation.

8.0 Sample Preservation **and** Storage

8.1 Samples are preserved and stored according to the tables in Sample Control SOP 4.1, "Receiving Samples" and 4.6, "Storing Samples." Sample holding times are also listed.

8.2 **Aqueous samples received for trace metals analyses are checked for acid preservation upon receipt.** Metals **samples not** preserved at the time of collection with HNO_3 to a pH <2 **may be preserved in-house**. **Samples must be preserved at least 24 hours prior to analysis.**

8.3 Aqueous metals samples must be analyzed within 180 days from sampling in order to meet the method holding time.

8.4 Samples are obtained from the Custodian out of **ambient** storage. After preparation, they are returned to the Custodian for long-term storage and disposal.

ORIGINAL MASTER COPY CONTROLLED COPY
If words above are not highlighted, this is an uncontrolled copy of this document.

8.4.1 TCLP extracts are stored in the cooler at 4°C ± 2°C.

9.0 Quality Control **(QC)**

9.1 **Method** Blank

9.1.1 Prepare a method blank for each batch of up to 20 samples.

9.2 Laboratory Control Sample

9.2.1 Prepare a LCS with each batch of up to 20 samples.

9.3 Matrix Spike and Matrix Spike Duplicate

9.3.1 Prepare a matrix spike (MS) and matrix spike duplicate (MSD) for each **batch of up to 20 samples**.

9.4 Duplicate

9.4.1 The NCDENR requires **a** 10% duplicate frequency **which is met by the 5%** MS/MSD frequency requirement.

9.5 All QC samples are digested at the same time as the batch samples.

10.0 Calibration **and** Standardization

Automated pipettes used to add standards to sample aliquots during sample preparation are calibration monthly. See SOP 9.1, "Calibrating Automatic Pipettes in the Inorganic Laboratory".

11.0 Procedure

Documentation must follow the requirements in Q**uality** C**ontrol** SOP **13.6, "**Proper Documentation Procedures**"**. Complete the Metals Preparation Log (Attachment **1**) as you proceed through the sample preparation. All traceability documentation must be recorded in the Standards/QC Preparation for Trace ICP log (Attachment **2**)

11.1 Sample Preparation

11.1.1 Prepare the method blank using 50-mL reagent water.

11.1.2 Prepare the LCS by adding 0.5-mL of XCL-LCS-10XA and 0.5-mL of XCL-LCS-10XB to 50-mL of reagent water.

11.1.2.1 Prepare the TCLP LCS by adding 0.5-mL of TCLP STD-500 and 0.50-mL of the 100-µg/mL Silver standard to 50-mL of reagent water.

11.1.3 Prepare the MS/MSD by adding 0.5-mL of XCL-20 solution to two separate 50-mL aliquots of the sample designated as the original.

11.1.3.1 Prepare the TCLP matrix spikes by adding 0.5-mL of TCLP STD-500 and 0.50-mL of the 100-µg/mL Silver standard to two separate aliquots of the TCLP sample extract designated as the original.

11.2 Request samples scheduled to be prepped for the day from the Sample Custodian with a Sample Request Form (Internal Chain of Custody, COC) (Attachment 5). This form will accompany the raw samples when they are delivered to the preparation laboratory and remains with them until they are returned to the Sample Custodian. The preparation technician must sign and date the COC record.

11.3 Check the pH of each sample to ensure that each has been acidified to <2. If the sample has not been properly acidified, notify Customer Service who will contact the client for instructions on how to proceed.

11.4 Dissolved Metals **(Method EPA 200.7)**

11.3.1 Samples not filtered and preserved **at collection, are filtered and preserved to pH <2 with a 1:1 HNO_3 solution** upon sample receipt. This process is recorded on the sample filtration worksheet (Attachment **3**). **Analyses by** Inductively Coupled Plasma Atomic Emission Spectroscopy **(ICP-AES) may proceed after 24 hours.**

11.3.2 Prepare QC samples for dissolved metals at the instrument bench following instructions provided in the Standards/QC Preparation Log **and in section 11.1**.

11.4 Digestion Procedure

11.4.1 Read the operating instructions for the block (Attachment **4**) prior to turning it on for the first time. **Turn on the digestion blocks.** The set temperature is approximately 100°-103° C for the maintenance of 95° C sample temperature.

11.4.2 Monitor the temperature of each block **by placing** a calibrated alcohol thermometer **into on of the sample cups. Fill this cup with reagent water and place it in the** block **with the samples being digested.** Periodically **refill the cup** with **reagent** water. Keep a thermometer in each block whenever samples are being digested. Record the temperature on the Metals Preparation Log.

11.4.3 Prepare labels for each sample. The label should contain the laboratory identifier and any QC designation.

11.4.4 For samples submitted to meet the regulatory requirements of the NCDENR, follow the steps in this section. This is Standard Methods for the Examination of Water and Wastewater, Method 3030C, "Preliminary Treatment for Acid-Extractable Metals". For all other samples, **perform the Method 3010A digestion procedure starting with section 11.5.1**.

11.4.4.1 Samples must be treated and filtered within 72 hour of sampling to minimize acid contact and digestion of any sediment in the sample. At collection in the field, samples are acidified by adding 5-mL concentrated HNO_3 to 1 liter sample.

11.4.4.2 Thoroughly mix the sample **by shaking the container** before **removing an** aliquot.

11.4.4.3 Transfer 50-mL of sample to a properly labeled digestion cup.

11.4.4.4 Add 2.5-mL of 1:1 HCl and cover with a ribbed watch cover.

11.4.4.5 Heat for 15 minutes in the digestion block.

11.4.4.6 Cool the sample**s** and filter through a membrane filter (0.45 **µ**m).

11.4.4.7 Dilute to the 50-mL mark with **reagent** water.

11.4.4.8 Relinquish samples to the ICP Chemist **or ICP analysis storage area outside the ICP instrument lab.**

11.4.4.9 **Prepare the** QC samples at the instrument bench following the directions provided in the Standards and QC Log **and in section 11.1**.

11.4.5 Thoroughly mix the sample **by shaking the container** before **removing an aliquot**.

11.4.6 Transfer 50-mL of sample to a properly labeled polypropylene digestion cup. Add 1.5-mL concentrated nitric acid.

11.4.6.1 Prepare QC samples as described in Section **11.1**. Add 1.5mL of concentrated nitric acid.

11.4.7 **Place the sample cups in the rack.** Place ribbed watch covers on the cups and place into a 95° C digestion block. Monitor the digestion block temperature and record it on the Metals Preparation Log.

11.4.8 **Heat** samples for one hour **with out boiling**. **Allow the samples to reduce but not to dry.** At the end of the first hour, remove the cups from the digestion block. Remove and discard the watch cover.

11.4.9 Add 1.5-mL of concentrated nitric acid to each sample. Cover the samples with new **non-ribbed** watch covers and return the rack to the digestion block.

11.4.10 **Gently reflux the samples, adding HNO_3 until the sample is clear of there is no change in appearance with continued refluxing**. **R**emove the rack from the digestion block. Allow the samples to cool.

11.4.11 Add 2.5-mL of **1:1** HCl and **reflux** the **samples** in the digestion block for another 15 minutes to dissolve any precipitate produced during the evaporation process.

Note: If samples have evaporated to less than about 30-mL, add 10-mL of **reagent** water prior to the addition of HCl. This will help to prevent the precipitation of elements, specifically Ag, that are sensitive to high concentrations of chlorides.

11.4.12 **Adjust the** sample volume**s to** 50-mL mark with **reagent** water. Attach **screw**-caps securely.

11.4.13 **Deliver** copies of the completed Sample Preparation Log with the samples to the ICP Chemist **of ICP sample storage area.**

12.0 Data Analysis **and** Calculations

Calculations must be consistent with the Q**uality** C**ontrol** SOP **13.4, "**Numerical Data Reduction**"**.

13.0 Method Performance

This method was validated through in-house laboratory studies of method detection limits and precision and accuracy for single analyst. The data are retained by the QA department.

14.0 Pollution Prevention

The solvents used in this procedure pose little threat to the environment when recycled and managed properly. Pollution prevention encompasses any technique that reduces or eliminates the quantity or toxicity of waste at the point of generation. Numerous opportunities for pollution prevention exist in laboratory operation. The EPA has established a preferred hierarchy of environmental management techniques that places pollution prevention as the management option of first choice. Whenever feasible, laboratory personnel should use pollution prevention techniques to address their waste generation. When wastes cannot be feasibly reduced at the source, the Agency recommends recycling as the next best thing. **See SOP 12.1, "Hazardous Waste Disposal" requiring laboratory procedures for recycling waste streams.**

15.0 Waste Management

It is the laboratory's responsibility to comply with all federal, state, and local regulations governing waste management, particularly the hazardous waste identification rules and land disposal restrictions, and to protect the air, water, and land by minimizing and controlling all releases from fume hoods and bench operations. Compliance with all sewage discharge permits and regulations is also required.

Samples preserved with HCl, HNO_3, or H_2SO_4 are hazardous and must be handled as hazardous waste.

16.0 References

16.1 "Test Methods for Evaluating Solid Wastes: Physical/Chemical Methods", SW846, 3rd Edition, Update III, 12/96, 3010A.

16.3 Methods for Chemical Analysis of Water and Wastes, March 1983, Method 200.7

16.4 Standard Methods for the Examination of Water and Wastewater, 20th (1998) Edition, Method 1080, 3030C, 3030F

16.5 Code of Federal Register, 40 CFR, Part 136, "Guidelines for Establishing Test Procedures for Priority Pollutants"

16.6 Q**uality** C**ontrol** SOP **13.6, "**Proper Documentation Procedures**"**

16.7 NELAC Standards, **2003**

16.8 QA/G6: Guidance for Prepar**ing** Standard Operating Procedures **(SOPs)** EPA/600/**B-07**/0**01**, **April 2007**.

16.9 CompuChem Quality Manual, Revision **10, February 19, 2008.**

16.10 Sample Control SOP 4.6, "Storing Samples"

17.0 Attachments as Tables, Diagrams, **and** Flowcharts

17.1 Attachment **1** - Metals Preparation Run Log

17.2 Attachment **2** - Standards/QC Preparation Log

17.3 Attachment **3** - Sample Filtration Worksheet

17.4 Attachment **4** - Operating Instructions for Environmental Express Hot Blocks

17.5 Attachment **5** – Sample Request Form/Internal Chain-of-Custody (C-O-C)

Attachment **1**

CompuChem, a Division of Liberty Analytical Corp.

METALS/MERCURY PREPARATION LOG

Blue Water

Metals Method: 3010A / 6010B

Mercury Method: 7470A

Date Prepped:

Batch No.:

Prepared by:

COMPUCHEM NUMBER	CLIENT SAMPLE ID	SAMPLE TYPE	ICP Initial mL	ICP Final (mL)	HG Initial mL	HG Final (mL)	*Description Before	*Description After ICP	pH
							/	/	
							/	/	
							/	/	
							/	/	
							/	/	
							/	/	
							/	/	
							/	/	
							/	/	
							/	/	
							/	/	
							/	/	
							/	/	
							/	/	
							/	/	
							/	/	
							/	/	
							/	/	
							/	/	
							/	/	
							/	/	
							/	/	
							/	/	
							/	/	
							/	/	
							/	/	
							/	/	
							/	/	
							/	/	
							/	/	
							/	/	
							/	/	
							/	/	
							/	/	
							/	/	
							/	/	
							/	/	

Mercury Standards and QC

S0 S0.2 S0.5 S1 S5 S10
ICV ICB CRI CCV CCB

Hot Block Temp In:	
Hot Block Temp Out:	

Time Hg in water bath:	
Time Hg out water bath:	
Water Bath Temp In:	
Water Bath Temp Out:	

Reviewed by:

Date:

Sample Spike(SS) Ref:

ICAP: 0.5mL XCL-20

Ref #:

HG: 1.0mL 100ppb Hg

Ref#

LCS Ref:

ICAP: 0.5mL XCL LCS 10XA

Ref #:

ICAP: 0.5mL XCL LCS 10XB

Ref #:

HG: 3.0mL 100ppb Hg

Ref#

09/09/06TMG

NOTE: All standards and QC for mercury were prepared at the same day as the associated samples. Refer to the attached Standard/QC Preparation Log, with date matching the above preparation date, for preparation method and instruction.

* R=red, BL=blue, Y=yellow, G=green, O=orange, V=violet, W=white, CS=colorless, BR=brown, BK=black, GY=grey

F=fine M=medium C=coarse CL=clear, CY=cloudy, OP=opaque

"The presence of the Chemist/analyst's employee ID number, or signature, on this log attests that strict compliance with the method's SOP has occurred. Any SOP deviations require documentation by the responsible chemist/analyst together with the chemist/analyst's initials and the initials of the lab supervisor and a QA department representative, signifying approval of the deviation."

Shading has been applied to unused portions of this worksheet as a substitute for 'Z-out.

Attachment **2**

Standards/QC Preparation Log for ICP Metals/Mercury Page 1 of 3 **Case/SDG:**_____
COMPUCHEM a division of Liberty Analytical Corp. Worksheet 1Q (1) 2

REAGENTS	REF#[1]	MANUFACTURER	LOT#	EXPIRATION DATE
SULFURIC ACID (H_2SO_4)	1m2-183-02	CALEDON	62000	08/10
NITRIC ACID (HNO_3)	1m2-184-12	JT BAKER	E27027	11/10
POTASSIUM PERMANGANATE ($KMnO_4$)	1m2-182-19	JT BAKER	C46630	04/10
HYDROCHLORIC ACID (HCL)	1m2-183-12	CALEDON	62448	08/10
POTASSIUM PERSULFATE ($K_2S_2O_8$)	1m2-181-4	CALEDON	60064	06/09
HYDROGEN PEROXIDE (H_2O_2)	1m2-183-10	CALEDON	63404	02/10
STANDARDS				
XCL 20	1m2-183-1	HIGH PURITY	0716527	06/08
XCL LCS 10X A	1m2-182-27	HIGH PURITY	0716427	06/08
XCL LCS 10X B	1m2-182-28	HIGH PURITY	0716428	06/08
EPA PPT (540)	1m2-183-13	ERA	540	08/10
EPA LCS (0405)	1m2-182-5	EPA	0405	09/08
ICV-1 (1201)	7m1-39-01	EPA	1201	11/10
ILMO5.3 MATRIX SPIKE	1m2-183-06	HIGH PURITY	0720117	07/08
TCLP 500	1m2-183-15	HIGH PURITY	0720720	07/08
SILVER	1m2-183-14	HIGH PURITY	0719407	01/09
LEAD (Pb) 1000ppm	7m1-39-08	HIGH PURITY	0723203	03/09
ARSENIC (As) 1000ppm	7m-39-07	HIGH PURITY	0718613	03/09
MERCURY (Hg) 20ppm	1m2-182-22	HIGH PURITY	0713510	05/08
ICV-5 (1104) Hg	1m2-182-23	EPA	1104	05/10

[1]Ref#=Logbook ID, Page number, and item number from Materials Receipt Log
[2]Standard Lot Number consist of standard ID, date prepared, and initials of preparer

STANDARD SOLUTIONS PREPARED BY:_____ DATE:_____

ENTERED BY:_____ DATE:_____

REVIEWED BY:_____ DATE:_____

The presence of the Chemist's/Analyst's employee ID number, or signature, on this worksheet attests that strict compliance with the method's SOP has occurred. Any SOP deviations require documentation by the responsible chemist/analyst together with the chemist's/analyst's initials and the initials of the lab supervisor and a QA department representative, signifying approval of the deviation.

12/03/07:RM

Attachment **2** (continued)

Standards/QC Preparation Log for ICP Metals/Mercury Page 2 of 3 **Case/SDG:**_____
COMPUCHEM a division of Liberty Analytical Corp. Worksheet 1Q (1) 2

STANDARD LOT NUMBER[2]	PREPARATION INSTRUCTIONS
Hg 100ppb- 12 03 07 - JP	Place in a 100mL volumetric flask: 0.5mL of 20ppm Hg stock solution 2.5mL of concentrated HNO_3 Baker instra-analyzed Trace Metals grade or equivalent Dilute to 100mL volume with reagent water (**PREPARE DAILY**)
$K_2S_2O_8$- 12 01 07 - JP Potassium Persulfate	Place in a 1000mL Erlenmeyer flask: 50.0g of $K_2S_2O_8$ Baker instra-analyzed Trace Metals grade or equivalent Dilute to 1000mL with reagent water. Transfer to a re-pipettor bottle (**PREPARE AS NEEDED**)
$KmnO_4$- 12 01 07 - JP Potassium Permanganate	Place in a 2000mL volumetric flask: 100.0g of $KmnO_4$ Baker instra-analyzed Trace Metals grade or equivalent Dilute to 2000mL with reagent water (**PREARE AS NEEDED**)
HNO_3- 11 29 07 - JP Nitric Acid	Place in a 2000mL volumetric flask: 500mL of Deionized water 1000mL of concentrated HNO_3 Baker instra-analyzed Trace Metals grade or equivalent Dilute to 2000mL with reagent water (**PREPARE AS NEEDED**)
HCl- 11 29 07 - JP Hydrochloric Acid	Place in a 500mL volumetric flask: 200mL of Deionized water 250mL of concentrated HCl Baker instra-analyzed Trace Metals grade or equivalent Dilute to 500mL with reagent water (**PREPARE AS NEEDED**)

[1]Ref#=Logbook ID, Page number, and item number from Materials Receipt Log
[2]Standard Lot Number consist of standard ID, date prepared, and initials of preparer

STANDARD SOLUTIONS PREPARED BY:_____ DATE:_____

ENTERED BY:_____ DATE:_____

REVIEWED BY:_____ DATE:_____

The presence of the Chemist's/Analyst's employee ID number, or signature, on this worksheet attests that strict compliance with the method's SOP has occurred. Any SOP deviations require documentation by the responsible chemist/analyst together with the chemist's/analyst's initials and the initials of the lab supervisor and a QA department representative, signifying approval of the deviation.

12/03/07:RM

Attachment **2** (continued)

Standards/QC Preparation Log for ICP Metals/Mercury Page 3 of 3 **Case/SDG:**_____
COMPUCHEM a division of Liberty Analytical Corp. Worksheet 1Q (1) 2

STANDARD LOT NUMBER[2]	PREPARATION INSTRUCTIONS	Resultant Analyte Concentration
ICV-5- 12 03 07 - JP	Pipet into a 300mL BOD Bottle 1.0mL of ICV-5 and 99mL of reagent water. Digest according to sample preparation instructions	4.1µg/L
S0/ICB/CCB- 12 03 07 - JP	Pipet into a 300mL BOD Bottle 100mL of reagent water Digest according to sample preparation instructions	0.0µg/L
S0.2/CRA/CRI- 12 03 07 - JP	Pipet into a 300mL BOD Bottle 0.2mL of Hg 100ppb and 99.8mL of reagent water Digest according to sample preparation instructions	0.2µg/L
S0.5- 12 03 07 - JP	Pipet into a 300mL BOD Bottle 0.5mL of Hg 100ppb and 99.5mL of reagent water Digest according to sample preparation instructions	0.5µg/L
S1.0- 12 03 07 - JP	Pipet into a 300mL BOD Bottle 1.0mL of Hg 100ppb and 99mL of reagent water Digest according to sample preparation instructions	1.0µg/L
S5.0/CCV- 12 03 07 - JP	Pipet into a 300mL BOD Bottle 5.0mL of Hg 100ppb and 95mL of reagent water Digest according to sample preparation instructions	5.0µg/L
S10.0- 12 03 07 - JP	Pipet into a 300mL BOD Bottle 10mL of Hg 100ppb and 90mL of reagent water Digest according to sample preparation instructions	10.0µg/L

[1]Ref#=Logbook ID, Page number, and item number from Materials Receipt Log
[2]Standard Lot Number consist of standard ID, date prepared, and initials of preparer

STANDARD SOLUTIONS PREPARED BY:_____ DATE:_____

ENTERED BY:_____ DATE:_____

REVIEWED BY:_____ DATE:_____

The presence of the Chemist's/Analyst's employee ID number, or signature, on this worksheet attests that strict compliance with the method's SOP has occurred. Any SOP deviations require documentation by the responsible chemist/analyst together with the chemist's/analyst's initials and the initials of the lab supervisor and a QA department representative, signifying approval of the deviation.

12/03/07:RM

Attachment **3**

Metals Filtration Preparation Log
Metals Method : Filtration
CompuChem a Division of Liberty Analytical Corp.

Case/SDG:_____Prepared by:_____ Date:_____

#	CCN (Lab ID)	Client ID	Date Rec'd	FILTRATION PERFORMED (CHECK)	pH
1					
2					
3					
4					
5					
6					
7					
8					
9					
10					
11					
12					
13					
14					
15					
16					
17					
18					
19					
20					

Reagent Manufacturer & Lot #'s:

ORIGINAL MASTER COPY CONTROLLED COPY
If words above are not highlighted, this is an uncontrolled copy of this document.

Attachment **4**

Operating Instructions

Catalog Number:

36 well Digestion Block	SC100
Polypropylene Digestion Cups,500/pk.	SC500
18 Cup Tray	SC200

The HOT BLOCK

Specifications

Size: 15" X 15"
Voltage: 120 VAC
Well Size: 3.14" X 2.75"
Weight: 43 lb.
Current: 5 amps maximum
Cup Capacity: 50mL
Max. Cup Temperature: 130°C
Temperature Range: Ambient - 165°C
Controller: Ogden ETR -3020
Temperature Stability: ± 0.1°C
Temperature Uniformity: ± 1°C
Time to Heatup (empty): 13 minutes
Time to Heatup (loaded): 25 minutes

Environmental Express, Ltd..
490 Wando Park Blvd.
Mt. Pleasant, SC 29464
800-343-5319 (o)
803-881-3964 (f)
www. envexp.com

The Environmental Express® Hot Block™ provides an elegant and efficient method of digesting and storing water, wastewater, soil and sludge samples for metals analysis. This innovative system allows samples to be digested in a corrosion free environment. In addition, samples are handled in a small area with minimal radiant heat loss.

Construction
The Hot Block contains almost no metal components. Only the thermocouple (buried and sealed in the graphite), and the controller contacts (sealed with acrylic), are metal. A nitride coating prevents oxidative agents from attacking the integrity of graphite surfaces, and standard digestion agents such as HCL and HNO3 demonstrate no adverse effect on graphite or the fire resistant, box construction material, Kydex®. Box fasteners are PVC. The internal assembly is encased with 1" of thermal insulation.

Location
Locate the Hot Block under a fume hood with a minimum face velocity of 100 fpm, and allow a minimum of 2" of space on all sides.

Temperature Setting
The preset factory "Control Point" temperature is 115°C. Tests have shown that acid solutions in the polypropylene digestion cups with a Control Point temperature of 115°C will achieve 95°C at 760mm of Mercury (sea level). If digestions are being performed at higher elevations it may be necessary to reduce the set point temperature.
Note: The maximum use temperature of the polypropylene cup is 130° C.

To Adjust Temperature
(1) Turn the Hot Block on and wait until the display shows the current block temperature.

(2) Press the left arrow key. The display will show the Control Point temperature. The flashing digit can be changed with the up or down arrow keys.

(3) To change to another flashing digit, press the left arrow key.

(4) When the proper Control Point is reached, press the set key to return to the current temperature display.

Temperature Limit
The controller of the Hot Block has an upper control limit of 150°C. This upper control limit may be changed if desired (see the accompanying controller manual). There is a non-serviceable safety fuse set at 168°C. If the block temperature rises above 168°C, this fuse will melt. (A complete guide to the controller is included with your Hot Block). It is important to note that different liquids may achieve different temperature at the same Hot Block temperature setting. This is due to different vapor pressures of different liquids. When performing standard acid digestions of environmental samples, samples with high oil content will achieve higher temperatures than aqueous samples.

Maintenance
The Hot Block has no serviceable parts. Any service inquiries should be directed to Environmental Express. The unit should be cleaned regularly with water to remove acid residue. Acid that is spilled directly in the digestion wells should be neutralized and removed.

Warranty
This product is warranted against defects in materials and workmanship when used in accordance with the applicable instructions for a period of one year from the date of purchase. The warranty remedy is limited to product repair. If Environmental Express is unable to repair the Hot Block, the customer may, at his/her option receive a replacement unit or a full refund. **Operating the Hot Block at temperatures higher than 160°C will void the warranty.**

Attachment **5**

Internal COC Metals/Mercury Samples

CompuChem, a Division of Liberty Analytical Corp.

INTERNAL COC

DEPT: METALS _____ Date needed : _____

Batch No.: _____

	COMPUCHEM NUMBER	CLIENT SAMPLE ID	DATE REC.	CONTAINER TYPE	PARAMETER	BOTTLE NUMBER
1						
2						
3						
4						
5						
6						
7						
8						
9						
10						
11						
12						
13						
14						
15						
16						
17						
18						
19						
20						
21						
22						
23						
24						
25						
26						

	RELINQUISHED BY	DATE/TIME	REC. BY	DATE/TIME	REASON

Rev. 3/19/07:TMG

CompuChem
A Division Of
Liberty Analytical Corp.

501 Madison Avenue
Cary, NC 27513

NELAP accredited

SOP DOCUMENTATION FORM

This form must accompany all new and revised Standard Operating Procedures (SOPs) when you turn them in to Quality Assurance for review. Please fill out the entire block below (except effective date).

This is a new procedure _____ revised procedure ✓ outdated procedure (archive) _____

- Procedure Code: SPP-240 SOP Section #: 3.2.1.5 Revision #: 7

SOP Title: Digestion Block Preparation of Solid Samples for ICP Determination of Total Metals by SW-846 Method 3050B

Effective date: (QA fills in) 6/17/08

- Procedure prepared by: Yalgema Lopez Date: 6/5/08
- Procedure approved by: (If the manager prepared the SOP, a qualified second party should sign) Date: 061708
- Reason for change: Period review and update
- This procedure meets the requirements of the following approved method references: SW-846, 3rd Edition, Update III 12/96, Method 3050B

Procedure approved by a QA Representative (unless QA Representative signed above):

_____ Date: _____

On an annual basis: Lab managers are required to review lab practices and revise the SOP if necessary. If no revision is necessary, indicate by your signature that the SOP has been reviewed.

Annual Review—Signature: _____ *Date:* 062409

Annual Review—Signature: _____ *Date:* _____

Annual Review—Signature: _____ *Date:* _____

Annual Review—Signature: _____ *Date:* _____

Sample Preparation Procedure -240: Digestion Block Preparation of Solid Samples for ICP Determination of Total Metals by SW-846 **Method 3050B**

Table of Contents

SECTION	PAGE NO.
Section 1.0 – Scope and Application	2
Section 2.0 – Summary of Method	2
Section 3.0 – Definitions	2-3
Section 4.0 – Interferences	3
Section 5.0 – Safety	**3**-4
Section 6.0 – Equipment and Supplies	4
Section 7.0 – Reagents **and** Standards	**4**-5
Section 8.0 - Sample Preservation **and** Storage	**5**
Section 9.0 – Quality Control	**5-6**
Section 10.0 – Calibration **and** Standardization	**6**
Section 11.0 – Procedure	**6-10**
Section 12.0 – Data Analysis **and** Calculations	**10**
Section 13.0 – Method Performance	**10**
Section 14.0 – Pollution Prevention	11
Section 15.0 – Waste Management	**11**
Section 16.0 – References	**11**
Section 17.0 – Attachments as Tables, Diagrams **and** Flowcharts	**12**
Attachment 1	**13**
Attachment 2	**14**
Attachment 3	**15**
Attachment 4	**16**

ORIGINAL MASTER COPY CONTROLLED COPY
If words above are not highlighted, this is an uncontrolled copy of this document.

Sample Preparation Procedure -240: Digestion Block Preparation of Solid Samples for ICP Determination of Total Metals by SW-846 **Method 3050B**

1.0 Scope and Application

This method describes the digestion procedure for the preparation of solid samples, including soil, sediment, sludge, and biota, for **Inductively Coupled Plasma Atomic Emission Spectrometry** (ICP-**AES**). Sample volume and reagent volumes do not differ from the volumes used in the traditional beaker preparation procedure. This procedure is based upon SW-846 Method 3050B.

Staff members performing the procedures described in this SOP are responsible for reading, understanding, and complying with the SOP requirements. Supervisors are responsible for directing the analyst to the controlled SOP, and providing adequate explanation of the material contained therein.

This procedure is restricted to use by or under the supervision of analysts experienced in the instrumentation or preparative methods and who have demonstrated the ability to generate acceptable results through QC samples and analyst capability studies.

2.0 Summary of Method

A representative 0.95-1.9 gram sample aliquot is digested with repeated additions of nitric acid and hydrogen peroxide. Biota samples must first be homogenized. Hydrochloric acid is added to the initial digestate and the sample is refluxed. The digestate is diluted to a final volume of 100-m**L**.

3.0 Definitions

3.1 Method detection limit (MDL) – The minimum concentration of an analyte that can be measured and reported with 99% confidence that the analyte concentration is greater than zero and is determined from analysis of a sample in a given matrix containing the analyte (40 CFR, Part 136, Appendix B.)

3.2 Reporting Units – mg/Kg

3.3 A **Sample Delivery Group (**SDG**)** is defined by the following, whichever is more frequent:

- each 20 field samples received within a case, or

- each 7 calendar day period during which field samples in a case are received (14 calendar days if requested by the client) beginning with the receipt of the first sample.

NOTE: The **DOD-QSM** does not accept the SDG approach, unless the samples are prepared in a single batch. When a group of up to 20 field samples of a similar matrix are prepared as one batch, method-specified QC samples such as a method blank, laboratory control sample, matrix spike, matrix spike duplicate, and matrix duplicate must also be prepared together. If samples are batched together from different sites, project-specific QC must be processed.

3.4 DOD-QSM – Department of Defense Quality Systems Manual

4.0 Interferences

4.1 Chemical interferences are characterized by molecular compound formation, ionization effects, and solute vaporization effects.

4.2 Interferences are highly dependent on matrix type and the specific analyte element. Further detail on managing interferences is found in Instrument Procedure SOP 309, "Inductively Coupled Plasma Atomic Emission Spectroscopy by SW846."

5.0 Safety

5.1 Care should be taken when handling acids. Always use acids under approved fume hoods. Always pour acid into water.

5.2 Appropriate protective equipment and clothing must be used under the assumption that all samples are potentially hazardous. Safety glasses, gloves and lab coats are a minimum requirement. The persistent presence of noxious odors may be indicative of failure of the laboratory ventilation system and must be reported to a supervisor or manager.

5.3 In this prep method, the 50-mL cup requires the technician to closely monitor sample reaction to reagents in order to avoid sample overflow.

5.4 Laboratory staff **must** review the Chemical Hygiene Plan for general safety policies, and Material Safety Data Sheets **(MSDS)** for reagents used in the laboratory. **The Chemical Hygiene Plan and MSDS are located in the quality assurance department.**

6.0 Equipment **and** Supplies

6.1 Polypropylene digestion cups - 50-mL

6.2 Ribbed polypropylene watch glasses

6.3 Environmental Express 36 and 54 well digestion blocks

6.4 Whatman No. 41 filter paper or equivalent.

6.5 Analytical balance--capable of accurately weighing to the nearest 0.01 g.

6.6 **Volumetric flasks – 100-mL**

6.7 Blender for homogenizing biota samples.

6.8 Small plastic funnel

7.0 Reagents **and** Standards

7.1 All purchased chemicals and reagents that do not arrive with an expiration date, must be assigned an expiration date three years from receipt. All lab prepared regents must be assigned an expiration date one year from preparation.

7.2 Reagent Water-All water used during preparation should be reagent-grade Type I with regard to resistivity of > 10 megohm-cm (18th and 19th Editions of Standard Methods, Method 1080), and referred throughout this SOP as **reagent** water.

7.3 Nitric acid (HNO_3) – concentrated, ultra-pure reagent.

7.3.1 All concentrated nitric acid used in preparations should be Baker "Instra-analyzed" (BIA) or an equivalent.

7.3.2 1:1 HNO_3

7.3.2.1 Prepare a 1:1 solution by slowly adding one part acid to one part **reagent** water.

7.4 Hydrochloric acid (HCl) – concentrated, ultra-pure reagent

7.4.1 All concentrated hydrochloric acid used in preparations should be Baker "Instra-analyzed" (BIA) or an equivalent.

7.4 Hydrogen peroxide (30%) - purified and preserved with tin.

7.5 ERA PPT **(540)** Soil**,** purchased, certified LCS soil standard.

7.5.1 This standard will be used **as the Laboratory Control Sample (LCS)**.

7.6 **High-Purity Standards** XCL-20**,** purchased, certified aqueous standard

7.6.1 For use in spiking the **duplicate matrix spikes**

7.7 Dry ice for the homogenization of biota

8.0 Sample Preservation **and** Storage

8.1 Samples are preserved and stored according to the tables in Sample Control SOP 4.1, "Receiving Samples" and 4.6, "Storing Samples." Sample holding times are also listed.

8.3 Soil samples are stored under refrigeration at 4 **ºC ± 2º**C.

8.4 All samples must be digested and analyzed within 180 days of collection.

8.5 Samples are obtained from the Custodian out of cold storage. They should be allowed to come to room temperature prior to sample preparation. After preparation, they are returned to the Custodian and placed in the cooler at **4 ºC ± 2ºC** for long-term storage and disposal.

8.6 After analysis, the residual digestates are boxed up and stored in the ICP laboratory **and** Sample Control. After three months they are disposed of in the acid waste stream.

9.0 Quality Control **(QC)**

9.1 **Method** Blank

9.1.1 Prepare a blank for each digestion batch of up to 20 samples.

9.2 Laboratory Control Sample

9.2.1 Prepare a LCS for each preparation batch of up to 20 samples.

9.3 Matrix Spike/Matrix Spike Duplicate

9.3.1 Prepare a matrix spike (MS) and matrix spike duplicate (MSD) for each **sample batch of up to 20 samples**.

9.4 Duplicate

9.4.1 For NC DENR, duplicates are required at a 10% frequency. The duplicate frequency is satisfied with the **duplicate matrix spikes**.

10.0 Calibration **and** Standardization

10.1 Ensure that the balance has been calibrated for the day before weighing out samples. Refer to Quality Control SOP 13.16, "Top Loading Balance Calibration and Maintenance."

10.2 Automated pipettes used to add standards to sample aliquots during sample preparation are calibration monthly. See SOP 9.1, "Calibrating Automatic Pipettes in the Inorganic Laboratory".

11.0 Procedure

Documentation must follow the requirements in Q**uality** C**ontrol** SOP **13.6, "**Proper Documentation Procedures**"**.

11.1 Refer to the operating instructions for the block (Attachment 2) prior to turning it on for the first time. **Turn on the digestion blocks.** The set temperature for our elevation is approximately 100°-103° C for the maintenance of 95° C sample temperature.

11.2 Monitor the temperature of each block during sample digestion using a calibrated alcohol thermometer. **Place a digestion** cup **filled with reagent** contain**ing** a thermometer **in each block digestion**. Periodically **refill** the cups with **reagent** water. Record the temperature on the Metals/Mercury Preparation Log (Attachment **2**).

11.3 Request samples to be prepared for the day **from** the Sample Custodian **using** properly completed Sample Request Form (Attachment **3**). **The preparation technician must sign and date the COC record.** The form accompanies the samples until preparation is completed and they are returned to the Custodian.

11.4 Prepare labels for each sample. The label should contain the laboratory-assigned sample ID and any QC designation.

11.5 Soil Sample Preparation

11.5.1 Prepare the method blank using a clean solid matrix when available or an empty digestion cup to which the sample volumes of all reagents are added as the other samples in the batch.

11.5.2 Prepare the LCS adding 1.0 g of ERA PPT (540) Soil into a digestion cup. For MPCA samples, prepare two duplicate LCSs.

11.5.3 Prepare the MS/MSD by weighing two additional 0.95-1.9 g aliquots of the sample designated as the original into separate digestion cups. Add 1.0-mL of XCL-20 to each sample aliquot.

11.5.4 Allow field sample to equilibrate to room temperature. Discard any foreign objects such as sticks, stones/rocks, and leaves **from the sample container**. **Mix the sample, using a clean spatula, inside the sample container breaking any clumps. If necessary, sieve the sample using USS #10 sieve.**

11.5.5 Prepare the field sample by weighing a **0.95 - 1.9 gram** representative sample aliquot into a 50-mL digestion cup. Record the weight of the aliquot on the preparation log **(Attachment 1)**.

11.6 Biota Sample Preparation

11.6.1 If the same biota samples are being prepared for other analyses that require homogenizing, an aliquot of the sample **must** be taken after homogenizing (but before drying).

11.6.2 Weigh and record the entire sample **weight**. Freeze the sample at –10° C for 2 hours prior to homogenization.

11.6.3 Pack the blender below the blades with dry ice. Cut the frozen sample into small pieces and place them in the blender. Cover with dry ice and allow them to sit for one minute to refreeze.

11.6.4 Blend the sample. Pour the **blended** sample into a sample container and place the container in the freezer at –10° C **overnight**. Leave the lid loose so the dry ice can sublimate overnight. The sample will then be ready for the **preparation** procedure.

Note: Do not air dry the sample.

Note: Biota sample instructions do not pertain to **Ohio** VAP work.

11.7 Digestion Procedure

11.7.1 Add 10-m**L** of 1:1 nitric acid **to the sample in the digestion cup**. Swirl **to mix.**

11.7.2 Place the digestion cups in the sample rack and place the rack into the digestion block. Place a watch glass on the digestion cup.

11.7.3 Heat at 95° C for 10-15 minutes without boiling. Remove the sample **rack from the digestion**. Allow the sample to cool.

11.7.4 Add 5-m**L** concentrated nitric acid, and replace the watch glass. **Reflux the sample** for another 30 minutes. Remove the sample cup rack from the block. Allow the samples to cool.

11.7.4.1 If oxidation of the sample by the HNO_3 occurs (indicated by the generation brown fumes), add HNO_3 in 5-mL volumes until no brown fumes are generated by the sample.

11.7.5 Place the sample rack in the digestion block and heat the samples for 30 minutes without boiling. <u>Do not allow the sample to dry.</u>

11.7.6 Remove the sample rack for the digestion block and allow the sample to cool.

11.7.7 After the sample**s have** cooled, add **2-mL of reagent water and 3-mL** of 30% hydrogen peroxide **to the sample**. **Place the sample rack back in the digestion block to warm the samples and start the peroxide reaction. W**atch the sample**s** for vigorous reaction to the peroxide. **Care should be taken to avoid losses due to vigorous effervescence.** Continue **adding 30% peroxide in 1-mL volumes with** heating until effervescence subsides, remove from the digestion block, and cool the solution.

Note: Do not add more than a total of 10-mL of 30% peroxide to each sample.

11.7.8 Add 10mL of concentrated HCL to the sample and replace the watch glass. Place the sample rack back in the digestion block and reflux for 15 minutes.

11.7.9 Remove the sample rack and allow the sample**s** to cool.

11.8 Sample Filtration

11.8.1 Place **a** Whatman #41 paper in a clean funnel that rests atop a properly cleaned 100-mL volumetric flask (Class A). Prepare the filter and glassware with 1:1 nitric acid followed by a **reagent** water rinse.

11.12.1.1 See Glassware Preparation SOP 10.2, "Preparing Glassware for the Inorganics Laboratory" for glassware cleaning procedures.

11.8.2 Pour the contents of the sample cup into the filter. Thoroughly rinse the insides of the sample cup into the filter using **reagent** water. Ensure that the rinse volume does not cause the sample to rise above the top of the filter.

11.9 Dilute the digestate in the flask to a final volume of 100-m**L** with **reagent** water.

11.10 Place the sample label from the digestion cup on a 100-mL sample cup and transfer the sample to the cup. The sample digestion is now ready for analysis.

11.11 Deliver the samples and copies of the preparation worksheet to the ICP analyst or ICP lab sample storage area. Sign and date the internal chain-of-custody relinquishing the samples.

11.12 The following <u>optional</u> procedure may be used to improve **solubility** and recoveries for antimony, barium, lead, and silver.

11.12.1 Add 2.5-m**L** concentrated HNO_3 and 10-m**L** concentrated HCl to a 0.95-1.9 gram sample (wet weight) and cover with a watch glass. Place the sample in the heating block and heat for 15 minutes at 95° C.

11.12.2 Filter the digestate through Whatman No. 41 filter paper and collect the filtrate in a 100-m**L** volumetric flask. Wash the filter paper, while still in the funnel with no more than 5-m**L** of hot (~95° C) HCl, then with 20-**mL** of hot (~95° C) **reagent** water. Collect the washings in the same 100-m**L** volumetric flask.

11.12.3 Remove the filter and residue from the funnel, and place them back in the vessel. Add 5-m**L** of concentrated HCl, place the vessel back on the heating block, and heat at 95° C ± 5° C until the filter paper dissolves. Remove the vessel from the heating block and wash the

cover and sides with **reagent** water. Filter the residue and collect the filtrate in the same 100-**mL** volumetric flask. Allow the filtrate to cool, then dilute to volume.

Note: High concentrations of metal salts with temperature sensitive **solubility** can result in the formation of precipitates upon cooling of primary and/or secondary filtrates. If precipitation occurs in the flask upon cooling, do not dilute to volume.

11.12.4 If a precipitate forms on the bottom of the flask, add up to 10-m**L** of concentrated HCl to dissolve the precipitate. After the precipitate is dissolved, dilute to volume with **reagent** water.

11.12.5 The sample is now ready for analysis. Follow steps in section 11.10 and 11.11

12.0 Data Analysis **and** Calculations

12.1 Calculations must be consistent with the Q**uality** C**ontrol** SOP **13.4, "**Numerical Data Reduction**"**.

12.2 Sample results are based upon dry weight of the sample. The dry weight of the sample must be determined according to Sample Preparation Procedure –143, "% Moisture Determination (Undecanted) (EPA CLP, SW846, and NYSASP)." This value used as a correction factor for the determination of the dry weight value.

13.0 Method Performance

This method was validated through in-house laboratory studies of method detection limits and precision and accuracy for single analyst. The data are retained by the QA department.

14.0 Pollution Prevention

The solvents used in this procedure pose little threat to the environment when recycled and managed properly. Pollution prevention encompasses any technique that reduces or eliminates the quantity or toxicity of waste at the point of generation. Numerous opportunities for pollution prevention exist in laboratory operation. The EPA has established a preferred hierarchy of environmental management techniques that places pollution prevention as the management option of first choice. Whenever feasible, laboratory personnel should use pollution prevention techniques to address their waste

generation. When wastes cannot be feasibly reduced at the source, the Agency recommends recycling as the next best thing. **See SOP 12.1, "Hazardous Waste Disposal" requiring laboratory procedures for recycling waste streams.**

15.0 Waste Management

It is the laboratory's responsibility to comply with all federal, state, and local regulations governing waste management, particularly the hazardous waste identification rules and land disposal restrictions, and to protect the air, water, and land by minimizing and controlling all releases from fume hoods and bench operations. Compliance with all sewage discharge permits and regulations is also required.

Samples preserved with HCl, HNO_3, or H_2SO_4 to pH <2 are hazardous and must be handled as hazardous waste.

16.0 References

16.1 "Test Methods for Evaluating Solid Wastes: Physical/Chemical Methods", SW846, 3rd Edition, Update III, 12/96, Method 3050B.

16.2 Q**uality** C**ontrol** SOP **13.6, "**Proper Documentation Procedures**"**

16.3 Q**uality** C**ontrol** SOP **13.4, "**Numerical Data Reduction**"**

16.4 NELAC Standards, **2003**

16.5 QA/G6: Guidance for the **Preparing** Standard Operating Procedures **(SOPs)** EPA/600/ **B-07/001**, **April 2007**.

16.6 CompuChem Quality Manual, Revision **10**, **February 19, 2008**

17.0 Attachments as Tables, Diagrams, **and** Flowcharts

17.1 Attachment 1 – **Digestion Block Operating Instructions**

17.2 Attachment 2 – **Metals/Mercury Preparation Log**

17.3 Attachment 3 – **Internal Chain of Custody (ICP Analysis)**

17.4 Attachment 4 – **Internal Chain of Custody (Raw Sample)**

Attachment 1

Operating Instructions

The HOT BLOCK

Catalog Number:

36 well Digestion Block	SC100
Polypropylene Digestion Cups,500/pk.	SC500
18 Cup Tray	SC200

Specifications

Size: 15" X 15"
Voltage: 120 VAC
Well Size: 3.14" X 2.75"
Weight: 43 lb.
Current: 5 amps maximum
Cup Capacity: 50mL
Max. Cup Temperature: 130°C
Temperature Range: Ambient - 165°C
Controller: Ogden ETR -3020
Temperature Stability: ± 0.1°C
Temperature Uniformity: ± 1°C
Time to Heatup (empty): 13 minutes
Time to Heatup (loaded): 25 minutes

Environmental Express, Ltd..
490 Wando Park Blvd.
Mt. Pleasant, SC 29464
800-343-5319 (o)
803-881-3964 (f)
www. envexp.com

The Environmental Express® Hot Block™ provides an elegant and efficient method of digesting and storing water, wastewater, soil and sludge samples for metals analysis. This innovative system allows samples to be digested in a corrosion free environment. In addition, samples are handled in a small area with minimal radiant heat loss.

Construction
The Hot Block contains almost no metal components. Only the thermocouple (buried and sealed in the graphite), and the controller contacts (sealed with acrylic), are metal. A nitride coating prevents oxidative agents from attacking the integrity of graphite surfaces, and standard digestion agents such as HCL and HNO3 demonstrate no adverse effect on graphite or the fire resistant, box construction material, Kydex®. Box fasteners are PVC. The internal assembly is encased with 1" of thermal insulation.

Location
Locate the Hot Block under a fume hood with a minimum face velocity of 100 fpm, and allow a minimum of 2" of space on all sides.

Temperature Setting
The preset factory "Control Point" temperature is 115°C. Tests have shown that acid solutions in the polypropylene digestion cups with a Control Point temperature of 115°C will achieve 95°C at 760mm of Mercury (sea level). If digestions are being performed at higher elevations it may be necessary to reduce the set point temperature.
Note: The maximum use temperature of the polypropylene cup is 130° C.

To Adjust Temperature
(1) Turn the Hot Block on and wait until the display shows the current block temperature.

(2) Press the left arrow key. The display will show the Control Point temperature. The flashing digit can be changed with the up or down arrow keys.
(3) To change to another flashing digit, press the left arrow key.
(4) When the proper Control Point is reached, press the set key to return to the current temperature display.

Temperature Limit
The controller of the Hot Block has an upper control limit of 150°C. This upper control limit may be changed if desired (see the accompanying controller manual). There is a non-serviceable safety fuse set at 168°C. If the block temperature rises above 168°C, this fuse will melt. (A complete guide to the controller is included with your Hot Block). It is important to note that different liquids may achieve different temperature at the same Hot Block temperature setting. This is due to different vapor pressures of different liquids. When performing standard acid digestions of environmental samples, samples with high oil content will achieve higher temperatures than aqueous samples.

Maintenance
The Hot Block has no serviceable parts. Any service inquiries should be directed to Environmental Express. The unit should be cleaned regularly with water to remove acid residue. Acid that is spilled directly in the digestion wells should be neutralized and removed.

Warranty
This product is warranted against defects in materials and workmanship when used in accordance with the applicable instructions for a period of one year from the date of purchase. The warranty remedy is limited to product repair. If Environmental Express is unable to repair the Hot Block, the customer may, at his/her option receive a replacement unit or a full refund. **Operating the Hot Block at temperatures higher than 160°C will void the warranty.**

Attachment **2**

CompuChem, a Division of Liberty Analytical Corp.

METALS/MERCURY PREPARATION LOG

Blue Soil

Metals Method: 3050B / 6010B

Mercury Method: 7471A

Prepared by:

Date Prepped:

Batch No.:

COMPUCHEM NUMBER	CLIENT SAMPLE ID	SAMPLE TYPE	ICP Initial g	ICP Final (mL)	HG Initial g	HG Final (mL)	*Description Before	*Description After ICP	
							/	/	
							/	/	
							/	/	
							/	/	
							/	/	
							/	/	
							/	/	
							/	/	
							/	/	
							/	/	
							/	/	
							/	/	
							/	/	
							/	/	
							/	/	
							/	/	
							/	/	
							/	/	
							/	/	
							/	/	
							/	/	
							/	/	
							/	/	
							/	/	
							/	/	
							/	/	
							/	/	
							/	/	
							/	/	
							/	/	
							/	/	
							/	/	
							/	/	
							/	/	

Mercury Standards and QC

S0 S0.2 S0.5 S1 S5 S10

ICV ICB CRI CCV CCB

Hot Block Temp In:	
Hot Block Temp Out:	

Time Hg in water bath:	
Time Hg out water bath:	
Water Bath Temp In:	
Water Bath Temp Out:	

Reviewed by:

Date:

Sample Spike(SS) Ref:

ICAP: 1.0mL XCL-20

Ref#:

HG: 1.0mL 100ppb Hg

Ref#

LCS Ref:

ICAP: 1.0g ERA PPT (640)

Ref#:

HG: 0.2g ERA PPT (640)

Ref#

8/7/2006TMG

NOTE: All standards and QC for mercury were prepared at the same day as the associated samples. Refer to the attached Standard/QC Preparation Log, with date matching the above preparation date, for preparation method and instruction.

* R=red, BL=blue, Y=yellow, G=green, O=orange, V=violet, W=white, CS=colorless, BR=brown, BK=black, GY=grey

F=fine M=medium C=coarse CL=clear, CY=cloudy, OP=opaque

"The presence of the Chemist/analyst's employee ID number, or signature, on this log attests that strict compliance with the method's SOP has occurred. Any SOP deviations require documentation by the responsible chemist/analyst together with the chemist/analyst's initials and the initials of the lab supervisor and a QA department representative, signifying approval of the deviation."

Shading has been applied to unused portions of this worksheet as a substitute for '//-out'.

Attachment **3**

Compuchem a Division of Liberty Analytical
Internal Chain of Custody

ICP ANALYSIS

Project:_____

Case:_____ SDG:_____

Matrix:_____

COC for: raw sample extract digestates leachates aliquots other(explain):_____

CompuChem Numbers for Associated Samples

Released by	Received by	Date	Reason

This form generated on:

Attachment **4**

CompuChem a Division of Liberty Analytical
Internal Chain of Custody

RAW SAMPLE

Laboratory:_____ Requested By:_____

Water_____ Soil_____ P.E._____ Date:_____

EPA_____ Commercial_____ Shift: 1 2 3

This form generated on:

	CCN	Receipt Date	Preservation	Analysis Parameter	Bottle Number (receiving use only)
1				METALS HG	of
2				METALS HG	of
3				METALS HG	of
4				METALS HG	of
5				METALS HG	of
6				METALS HG	of
7				METALS HG	of
8				METALS HG	of
9				METALS HG	of
10				METALS HG	of
11				METALS HG	of
12				METALS HG	of
13				METALS HG	of
14				METALS HG	of
15				METALS HG	of
16				METALS HG	of
17				METALS HG	of
18				METALS HG	of
19				METALS HG	of
20				METALS HG	of

Relinquished By:_____ Date:_____ Received By:_____ Date:_____

Relinquished By:_____ Date:_____ Received By:_____ Date:_____

Relinquished By:_____ Date:_____ Received By:_____ Date:_____

CompuChem
A Division Of
Liberty Analytical Corp.

501 Madison Avenue
Cary, NC 27513

NELAP accredited

SOP DOCUMENTATION FORM

This form must accompany all new and revised Standard Operating Procedures (SOPs) when you turn them in to Quality Assurance for review. Please fill out the entire block below (except effective date).

This is a new procedure _____ revised procedure ✓ outdated procedure (archive) _____

- Procedure Code: IP 309 SOP Section #: 3.2.1.6 Revision #: 17

SOP Title: Inductively Coupled Plasma-Atomic Emission Spectroscopy by SW-846 Methods 6010B/6010C

Effective date: (QA fills in) 10-02-09

- Procedure prepared by: Bob Meuer Date: 8/31/09
- Procedure approved by: (If the manager prepared the SOP, a qualified second party should sign) ✓ Date: 090209
- Reason for change: Include requirements for Method 6010C and changes from review
- This procedure meets the requirements of the following approved method references: SW-846, 3rd Edition, Update III, 12/96, Method 6010B and Update IV, February 2007, Method 6010C, Revision 3

Procedure approved by a QA Representative (unless QA Representative signed above):

_____ Date: _____

On an annual basis: Lab managers are required to review lab practices and revise the SOP if necessary. If no revision is necessary, indicate by your signature that the SOP has been reviewed.

Annual Review—Signature: _____ Date: _____

Annual Review—Signature: _____ Date: _____

Annual Review—Signature: _____ Date: _____

Annual Review—Signature: _____ Date: _____

Instrument Procedure 309: Inductively Coupled Plasma Atomic Emission Spectroscopy by SW-846 Method**s** 6010B **and 6010C**

Table of Contents

SECTION	PAGE NO.
Section 1.0 – Scope and Application	2
Section 2.0 – Summary of Method	2-3
Section 3.0 – Definitions	3-4
Section 4.0 – Interferences	**5-6**
Section 5.0 – Safety	6
Section 6.0 – Equipment and Supplies	**6-7**
Section 7.0 – Reagents and Standards	7-8
Section 8.0 - Sample Preservation and Storage	8
Section 9.0 – Quality Control	**9-12**
Section 10.0 – Calibration and Standardization	**12-15**
Section 11.0 – Procedure	**15-20**
Section 12.0 – Data Analysis and Calculations	**21-23**
Section 13.0 – Method Performance	**23**
Section 14.0 – Pollution Prevention	**23**
Section 15.0 – Waste Management	**23-24**
Section 16.0 – References	**24**
Section 17.0 – Attachments as Tables, Diagrams, and Flowcharts	**24-25**
Attachment 1	**26**
Attachment 2	**27-29**
Attachment 3	**30**
Attachment 4	**31-32**
Attachment 5	**33**

ORIGINAL MASTER COPY CONTROLLED COPY
If words above are not highlighted, this is an uncontrolled copy of this document.

Instrument Procedure 309: Inductively Coupled Plasma Atomic Emission Spectroscopy by SW-846 Method**s** 6010B **and 6010C**

1.0 Scope and Application

This Standard Operating Procedure (SOP) describes the determination of elements in solution including metals by Inductively Coupled Plasma Atomic Emission Spectroscopy (ICP/AES). This SOP is applicable to a large number of metals and wastes. All matrices, including groundwater, aqueous samples, EP extracts, industrial wastes, soils, sludges, sediments, TCLP leachates, and other solid wastes, require digestion prior to analysis.

Method**s** 6010B **and 6010C are** applicable to the elements listed in Attachment 5. The elements determined for TCLP analysis are listed in **Section 3.6.** Detection limits, sensitivity, and optimum ranges of the metals will vary with the matrices and model of spectrometer. The data shown in these attachments are provided from clean aqueous samples.

Staff members performing the procedures described in this SOP are responsible for reading, understanding, and complying with the SOP requirements. Supervisors are responsible for directing the analyst to the controlled SOP, and providing adequate explanation of the material contained therein.

This procedure is restricted to use by or under the supervision of analysts experienced in the instrumentation or preparative methods and who have demonstrated the ability to generate acceptable results through QC samples and analyst capability studies. Use of this method is restricted to spectroscopists who are knowledgeable in the correction of spectral, chemical, and physical interferences.

2.0 Summary of Method

Prior to analysis, samples must be solubilized or digested following Sample Preparation Procedure –1080, "Digestion Block Preparation of Aqueous Samples for the ICP Determination of Total or Dissolved Metals by SW-846, MCAWW, and Standard Methods" or Sample Preparation Procedure –240, "Digestion Block Preparation of Solid Samples for ICP Determination of Total Metals by SW-846 Method 3050" TCLP samples must be leached following Sample Preparation Procedure –814, "Toxicity Characteristic Leaching Procedure (TCLP)" after which the leachates are digested as liquid samples using the TCLP spiking levels.

Method**s** 6010B **and 6010C are** executed by the laboratory using the simultaneous, multielemental determination of elements by ICP. The method measures element-

emitted light by optical spectrometry. Samples are nebulized and the resulting aerosol is transported to the plasma torch. Element-specific atomic-line emission spectra are produced by a radio-frequency inductively coupled plasma. The spectra are dispersed by a grating spectrometer, and the intensities of the lines are monitored by photomultiplier tubes. Background correction is required for trace element determination. Background must be measured adjacent to analyte lines on samples during analysis. The position selected for the background-intensity measurement, on either or both sides of the analytical line, will be determined by the complexity of the spectrum adjacent to the analyte line. The position used must be free of spectral interference and reflect the same change in background intensity as occurs at the analyte wavelength measured. Background correction is not required in cases of line broadening where a background correction measurement would actually degrade the analytical result. The possibility of additional interferences should also be recognized and appropriate corrections made. Three exposures are averaged to obtain a final result.

3.0 Definitions

3.1 Method detection limit (MDL) – The minimum concentration of an analyte that can be measured and reported with 99% confidence that the analyte concentration is greater than zero and is determined from analysis of a sample in a given matrix containing the analyte (40 CFR, Part 136, Appendix B.)

3.2 Instrument Detection Limits (IDLs) – IDLs are helpful to evaluate the instrument noise level and response changes over time for each analyte. They aren't to be confused with the lower limit of quantitation and should not be used in establishing that limit.

3.**3** Reporting Limit – The laboratory reporting limit is based on the lowest multipoint calibration standard concentration. For some inorganic methods, the reporting limit is based on the MDL, and is usually 4-8 times higher than the MDL. This is referred to as the Practical Quantitation Limit (PQL).

3.**3**.1 To meet the requirements of the DOD-QSM, the reporting limit concentration must be at least three times higher than the MDL value. If the ratio is not achieved, the reporting limit concentration is adjusted upward in order to achieve this minimal ratio. It may be adjusted higher than three times depending on the concentration range of the calibration curve and the ability to meet method linearity requirements.

3.**4** Reporting Units – µg/L for water and mg/Kg for soil

3.**5** A Sample Delivery Group (SDG) is defined by the following, whichever is more frequent:

- each 20 field samples received within a case, or
- each 7 calendar day period during which field samples in a case are received (14 calendar days if requested by the client) beginning with the receipt of the first sample.

NOTE: The DOD-QSM and SC DHEC do not accept the SDG approach, unless the samples are prepared in a single batch. When a group of up to 20 field samples of a similar matrix are prepared as one batch, method-specified QC samples such as a method blank, laboratory control sample, matrix spike, matrix spike duplicate, and matrix duplicate must also be prepared together. If samples are batched together from different sites, project-specific QC must be processed.

3.6 Toxicity characteristics constituents and regulatory levels for TCLP

Constituent (mg/L)	**Chronic toxicity reference level (mg/L)**	**Regulatory level (mg/L)**
Arsenic	0.05	5.0
Barium	1.0	100.0
Cadmium	0.01	1.0
Chromium	0.05	5.0
Lead	0.05	5.0
Mercury	0.002	0.2
Selenium	0.01	1.0
Silver	0.05	5.0

3.**7** SC DHEC – South Carolina Department of Health and Environmental Control

Note: For samples submitted to meet the regulatory requirements of the SC DHEC, analyses have to be performed using Method 6010C.

3.**8** DOD-QSM – Department of Defense Quality Systems Manual

4.0 Interferences

4.1 Spectral Interferences are caused by: (1) overlap of a spectral line from another element; (2) unresolved overlap of molecular band spectra; (3) background contribution from continuous or recombination phenomena; and (4) stray light from the line emission of high-concentration elements. Spectral overlap can be compensated for by computerized correction of the raw data after monitoring and measuring the interfering element. Unresolved overlap requires selection of an alternate wavelength. Background contribution and stray light can usually be compensated for by a background correction adjacent to the analyte line.

Users of simultaneous multi-element instruments must verify the absence of spectral interference from an element in a sample for which there is no instrument detection channel. Potential spectral interferences for the recommended wavelengths are given in the table in Attachment 1. The data are intended as rudimentary guides for indicating potential interferences; for this purpose, linear relations between concentration and intensity for the analytes and the interferences can be assumed.

4.1.1 The interference is expressed as analyte concentration equivalents (i.e., false analyte concentrations) arising from 100-mg/L of determined As (at 193,696 nm) in a sample containing approximately 10-mg/L of Al. According to Attachment 1, 100-mg/L of Al would yield a false signal for As equivalent to approximately 1.3-mg/L. Therefore, the presence of 10-mg/L of A1 would result in a false signal for As equivalent to approximately 0.13-mg/L. The user is cautioned that other instruments may exhibit somewhat different effects and must be evaluated individually since the intensities will vary with operating conditions, power, viewing height, argon flow rate, etc.

4.1.2 The dashes in Attachment 1 indicate that no measurable interferences were observed even at higher interference concentrations. Generally, interferences were discernible if they produced peaks, or background shifts, corresponding to 2 to 5% of the peaks generated by the analyte concentrations.

4.1.3 At present, information on the listed silver and potassium wavelengths is not available, but it has been reported that second-order energy from the magnesium 393.231 nm wavelength interferes with the listed potassium line at 766.491 nm.

4.2 Physical Interferences are effects associated with the sample nebulization and transport processes. Changes in viscosity and surface tension can cause significant inaccuracies, especially in samples containing high dissolved solids or high acid concentrations. If physical interferences are present, they must be reduced by diluting the sample, by using a peristaltic pump or by using the standard additions method. Another problem that can occur with high dissolved solids is salt buildup at the tip of the nebulizer, which affects aerosol flow rate and causes instrumental drift. The problem can be controlled by wetting the argon using a tip washer prior to nebulization or by diluting the sample. Also, it has been reported that better control of the argon flow rate improves instrument performance; this is accomplished with the use of mass flow controllers.

4.3 Chemical Interferences include molecular compound formation, ionization effects, and solute vaporization effects. Normally, these effects are not significant with the ICP technique. If observed, they can be minimized by careful selection of operating conditions (incident power, observation position, and so forth), by buffering of the sample, by matrix matching, and by standard addition procedures. Chemical interferences are highly dependent on matrix type and the specific analyte element.

4.4 The Thermo Jarrell Ash ICAP Trace Analyzer uses yttrium as an internal standard and takes into account any interference by ratioing the elements detected against the yttrium detected. All standards, blanks, and samples are spiked with yttrium.

5.0 Safety

5.1 Appropriate protective equipment and clothing must be used under the assumption that all samples are potentially hazardous. During sample preparation, safety glasses, gloves and lab coats are a minimum requirement. The persistent presence of noxious odors may be indicative of failure of the laboratory ventilation system and must be reported to a supervisor or manager.

5.2 Laboratory staff must review the Chemical Hygiene Plan for general safety **policies** and Material Safety Data Sheets (MSDS) for solvents and reagents used in the laboratory. The Chemical Hygiene Plan and MSDS are located in the Quality Assurance department.

6.0 Equipment and Supplies

6.1 Inductively coupled argon plasma emission spectrometer

6.1.1 Computer-controlled emission spectrometer with background correction

6.1.2 Radio frequency generator

6.1.3 Argon gas supply: Welding grade or better

6.2 Disposable sample tubes,

6.3 Automated pipette

6.4 Plastic screw-top bottles, various sizes

7.0 Reagents and Standards

Note: All standards and reagents are subject to change in vendor and in concentration. The Reporting Limits are also subject to change, but must remain at or above the Low Range Standard (LRS)/low-level continuing calibration verification (LLCCV), at the PQL.

Refer to the Standards/QC Preparation Log for Trace **ICP (**Attachment 2) for details of all standard preparations. Label each standard bottle with the lot number as described in the log.

7.1 Reagent Water-All water used during preparation should be reagent-grade Type I with regard to resistivity of > 10 megohm-cm (20th Edition of Standard Methods, Method 1080), and referred throughout this SOP as reagent water.

7.2 Concentrated acids – ultra high-purity grade

7.2.1 Hydrochloric acid (HCl), Caledon, Trace Metal Grade

7.2.2 Nitric acid (HNO_3), J.T. Baker, Instra-Analyzed® Reagent, or equipment

7.2.3 The same grade/purity of acids is to be used for all sample preparation, calibration standards, blanks, and QC samples.

7.3 Stock standard solutions – commercially available

7.3.1 The following table contains the stock standards used for ICP-AES analysis. Stock standard expiration dates are provided by the manufacturer.

Manufacturer	Standard
High Purity	SM-770-027 multi-element standard mix (RSTD-1)
High Purity	SM-770-028 part A multi-element standard mix (RSTD-2A)
High Purity	SM-770-028 part B multi-element standard mix (RSTD-2B)
High Purity	SM-770-029 part A multi-element standard mix (RSTD-3A)
High Purity	SM-770-029 part B multi-element standard mix (RSTD-3B)
High Purity	SM-770-030 multi-element standard mix (RSTD-4)
High Purity	SPEX-R multi-element standard mix
High Purity	ICP-AES-CRQL-R multi-element standard mix
EPA	ICV1 multi-element standard mix
EPA	ICSA multi-element standard mix
EPA	ICSB multi-element standard mix
High Purity	SM-770-031 multi-element standard mix (PDS-R)
High Purity	IRON (Fe) 10,000 PPM single-element standard
High Purity	CHROMIUM (Cr) 1,000 PPM single-element standard
High Purity	LEAD (Pb) 1,000 PPM single-element standard
High Purity	ARSENIC (As) 1,000 PPM single-element standard
High Purity	ZINC (Zn) 1,000 PPM single-element standard
High Purity	Internal Mix
High Purity**	XCL LCS **10XR** multi-element mix
High Purity**	XCL 20**R** multi-element mix

7.4 Intermediate and working standards are prepared at the bench by the analyst as needed. Intermediate and stock standard expiration dates do not exceed the expiration date of the stock standards used.

7.5 Calibration standards are prepared as needed as described on the Standards/QC Preparation Log for Trace ICP.

8.0 Sample Preservation and Storage

8.1 Samples are preserved and stored according to the tables in Sample Control SOP 4.1, "Receiving Samples" and 4.6, "Storing Samples." Sample holding times are also listed.

8.2 All samples must be preserved to a pH <2 with HNO_3.

8.3 Samples must be digested and analyzed within 180 days of collection.

8.4 Soil samples must be stored under refrigeration **at 4** ^{o}C ± 2 ^{o}C. Aqueous samples may be stored at ambient temperature.

8.5 After analysis residual digestate is maintained in the ICP room for three months then returned to the Custodian for storage until disposal into the acid waste stream.

9.0 Quality Control

9.1 Instrument Detection Limit (IDL)

9.1.1 IDLs are determined quarterly for each wavelength used for sample analyses.

9.1.2 Calculate the IDL for each analyte by multiplying by three, the average of the standard deviations calculated from the analysis of seven consecutive standard solutions (containing each analyte in reagent water) on three non-consecutive days (e.g., Monday, Wednesday, and Friday). The concentration of the standard analyzed should be at three to five times the most recently determined IDL values.

9.1.3 The IDL for each analyte must be less than the analyte reporting limit.

9.1.3.1 To meet the requirements of the DOD-QSM, the IDL must be less than or equal to the MDL for each analyte.

9.2 Linear **Dynamic** Range

9.2.1 The **upper limit of the** linear **dynamic** range for each ICP-AES instrument **needs to be established for each wavelength used, by determining the signal response from a minimum of three, preferably five, different concentration standards across the range and** must be verified **every six months.**.

9.2.2 Analyze a high concentration standard, linear range standard (LRS), during a routine analytical sequence. This concentration is the upper limit of the ICP-AES linear range.

9.2.3 The recovery of the LRS must be within ± **10**% of the expected value.

9.2.4 Samples with concentrations exceeding the linear range must be diluted.

9.2.5 For DOD-QSM and North Carolina compliance reporting, the linear range is defined by the highest calibration standard.

9.2.5.1 A high calibration standard that encompasses the concentration of the samples may be used to bracket the sample analyses.

This high standard must meet the acceptance criteria in 9.2.3 or 9.2.5.

9.3 Method Blank

9.3.1 A method blank **is** prepared **in every** batch of up to 20 samples **and is carried through the entire sample preparation and analytical process**. This blank is used to ascertain whether sample concentrations reflect contamination.

9.3.2 The method blank must contain absolute values of analyte concentrations below the reporting limit (PQL) **or below the applicable action level**. If the method blank concentrations exceed the reporting limit, the entire sample batch must be re-prepared along with a new method blank.

9.3.3 To meet the requirements of the DOD-QSM, the concentration of the target analytes in the method blank must be <½ the reporting limit.

9.3.3 For samples submitted for North Carolina compliance reporting, the concentration**s** of target analytes detected are reported between the MDL and PQL with a "J" flag. Any analytes detected in preparation blanks cannot be > ½ the PQL.

9.4 Matrix Spike

9.4.1 One matrix spike/matrix spike duplicate (MS/MSD) pair **or matrix spike/sample duplicate (depending on project requirements)** must be prepared with each batch of up 20 samples.

9.4.2 If the sample spikes do not meet the acceptance criteria of 75-125% recovery, the corresponding element is flagged with an "N" on the Form 1 to indicate that the element did not recover in the matrix spike acceptably. A post-digestion spike is performed for those elements that fall outside the limit.

9.4.2.1 To meet the requirements of the DOD-QSM, the recoveries of the matrix spike should meet the LCS control limits of 80 – 120%.

9.4.3 The Relative Percent Difference (RPD) between the MS/MSD **or sample and sample duplicate must** be ≤ 20%. If the criteria is not met, the affected element is flagged with an "*" to indicate poor duplication of results.

9.4.3.1 To meet the requirements of the DOD-QSM, report the specific analytes in the original sample as estimated values if the matrix spike and duplicate sample criteria are not met.

9.5 Post Digestion Spike (PDS)

9.5.2.1 Prepare and analyze a PDS, if matrix spike recovery criteria are not met. The spike addition should result in a value that is 2x the PQL.

9.5.2.2 The PDS results should be within 75% to 125% **for Method 6010B and within 80% to 120% for Method 6010C.** If not, the data are reported and discussed in the SDG narrative.

9.6 Laboratory Control Sample

9.6.1 A Laboratory Control Sample (LCS) is prepared with every digestion batch of up to 20 samples.

9.6.2 The manufacturer supplies the certified acceptance limits for the solid LCS. **A recovery limit of 80 – 120% is required for the aqueous LCS.** If the LCS falls outside these control limits, the analysis must be terminated, the problem corrected, and the samples associated with that LCS re-digested and reanalyzed.

9.6.2.1 To meet the requirements of the DOD-QSM, the LCS recoveries must be within 80 – 120% of the expected result.

9.7 Serial Dilution

9.7.1 One serial dilution must be performed for each batch.

9.7.2 Prepare a 5x dilution on a sample with an analyte concentration ≥ 50x o**f** the instrument detection limit in the original sample. The results of the dilution must then agree within ± 10% of the original sample results. If the dilution does not met this criteria, then flag the appropriate elements with an "E" to indicate that interference exists.

9.7.2.1 To meet the requirements of the DOD-QSM, a PDS must be prepared and analyzed when the serial dilution acceptance

criteria are not met or all sample analyte concentrations are less than 50 times the MDL.

9.8 Field and/or Equipment Blanks

9.8.1 Samples identified as field and/or equipment blanks should not be used for sample spike, duplicate, or serial dilution analysis. They are supplied to the laboratory at the discretion of the client.

9.9 Contingency

9.9.1 If due to a lab accident or to QC failures, a re-preparation and analysis are required for the sample and insufficient sample volume remains, the Project Manager must be alerted and will contact the client for direction on how to proceed.

9.9.2 If persistent contamination occurs in the laboratory, analysis must be halted until the source of the contamination can be identified and isolated. When the contamination issue is resolved, samples analysis may proceed.

9.9.3 Any other issues that potentially effect data quality should also be addressed with the Project Manager.

10.0 Calibration and Standardization

10.1 For Method 6010C, a lower limit of quantitation check (LLQC) is analyzed after the PQL is determined and on an as-needed basis to demonstrate the desired detection capability. The LLQC and the Low Range Standard (LRS) are prepared at the same concentration. The only difference is that the LLQC is carried through the entire sample preparation and analytical procedure. Lower limits of quantitation are verified when all analytes in the LLQC are detected within ± 30% of their true values.

10.1.1 The LRS, for Method 6010B, is a standard at the PQL, with advisory acceptance criteria of ± 50%.

10.1.2 To meet the requirements of the DOD-QSM, the recovery of each analyte in the LRS must fall within ± 20% of the expected value.

10.**2** The instrument calibration standards are analyzed at the beginning of the analytical sequence **and entered on** the Trace ICP run log (Attachment 3). Calibration is further discussed in the Procedure section that follows.

10.**3** Initial Calibration

10.**3**.1 The initial calibration consists of a zero concentration standard or calibration blank (ICB) and calibration standard. The analytes are divided into the following four standard solutions and analyte concentrations:

Standard Name	Analyte – concentration in µg/L
RSTD-1	Cd, Cr, Cu, Pb, Ni, Se, Tl, and Zn = 2,000; Ag = 200,
RSTD-2	As, Ba, Be, Co, Mn, Mo, and V = 2,000; Fe = 50,000
RSTD-3	K, Na, Al, Mg, and Ca = 100,000
RSTD-4	Sn, Bi, Ti, Sb, and B = 2, 000

10.3.2 The calibration blank consists of 5% HCl and 6% HNO_3 in reagent water.

10.**3**.2.1 A calibration blank is analyzed as part of both the initial calibration (ICB) and continuing calibration (CCB).

10.4 Initial Calibration Verification (ICV)

10.4.1 The ICV consists of second source **mid-level** calibration standard.

10.4.1.1 For Method 6010C, a low-level initial calibration verification (LLICV) standard is also prepared, at the PQL, and is from the same source as the ICV.

10.4.2 The EPA ICV1 solution is used to prepare the ICV **and LLICV** standard**s** and contain all of the standards in the table in section 10.**3**.

10.4.3 The results of the ICV must agree within ± 10% of the **true value** for each component. If this criterion is not met, terminate the run and re-calibrate the instrument. If the re-calibration does not produce acceptable ICV results, shut down the instrument and perform instrument maintenance.

10.4.3.1 The suggested acceptance criterion for the LLICV is ± 30% of its true vale.

10.4.3.2 To meet the requirements of the DOD-QSM, the recovery of each analyte in the LLICV must fall within ± 20% of the expected value.

10.4.4 Follow the ICV/**LLICV** with the ICB**.** The absolute value of the blank must be less than the laboratory reporting limit (PQL). If not, repeat the blank analysis. If still above the reporting limit, terminate the analysis and recalibrate. If re-calibration does not produce acceptable ICB results, shut down the instrument and perform instrument maintenance.

10.3.4.1 To meet the requirements of the DOD-QSM, the analyte concentration in the ICB must be ≤ **LOD**.

10.**5** Continuing Calibration Verification (CCV)

10.**5**.1 The CCV consists of a calibration blank (CCB) and a continuing calibration standard. The continuing calibration standard consists of the same standard solutions **presented** in section 10.**3**. The concentrations of the analytes is ½ that of the initial calibration standard.

10.5.1.1 For Method 6010C, a low-level continuing calibration verification (LLCCV) standard is also prepared, at the PQL, and is from the same source as the ICV. It is analyzed every 19 samples and at the end of the analytical run.

10.**5**.2 Verify the calibration every 10 samples and at the end of analytical run.

10.**5**.3 The results of the CCV must agree within ± 10% of the expected value. If not, terminate the analysis, correct the problem, and recalibrate the instrument.

10.4.3.1 The suggested acceptance criterion for the LLICV is ± 30% of its true vale.

10.**5**.4 A CCB must be analyzed at each wavelength used for analysis immediately after every continuing calibration standard and every 10 samples.

10.**5**.5 The acceptance criteria stated in sections 10.**4**.4 and 10.**4**.4.1 also apply to the CCB.

10.**6** Interference Check Sample (ICS)

10.**6**.1 The ICS consists of the ICSA and ICSAB solutions. Analyze the ICSA and ICSAB consecutively at the beginning the analytical run.

10.6.2 The results of the ICS must agree within ± 20% of the accepted values. If not terminate the analysis and recalibrate the instrument. If re-calibration does not fix the problem, shut down the instrument and perform instrument maintenance.

10.**6**.2.1 To meet the requirements of the DOD-QSM, the absolute value of the concentration of all the non-spiked analytes in the ICS-A must be < **LOD** (unless the analyte is a verified trace impurity from one of the spiked analytes).

11.0 Procedure

Documentation must follow the requirements in Quality Control SOP 13.6, "Proper Documentation Procedures".

11.1 TJA Trace Analyzer Set Up and Operating Procedure

11.1.1 Cooling Water

11.1.1.1 Turn on the recirculation pump. Thirty (30) psig is required at a flow rate of 700 mL/min.

11.1.2 Argon Supply

11.1.2.1 Open the argon supply to the instrument.

11.1.2.2 A volume rate of 30 SCFH and delivery pressure of 60 psig is required.

11.1.3 Venting System

11.1.3.1 A permanent vent has been installed to provide a proper draft in the torch compartment. A torch fan is permanently installed to force a 22 mph-draft across the end of the plasma torch.

11.1.4 Water in Drain Barrel

11.1.4.1 A hose is connected to the drain outlet from the spray chamber to allow the flow of unused sample waste from the chamber. This drain line acts as a positive seal to the spray chamber; therefore, liquid must always be present in the drain line.

11.2 Power Up (TJA Trace Analyzer)

11.2.1 To start the ICP Trace Analyzer, turn on the video display, the printer, the computer, and the autosampler.

11.2.2 At the "C" prompt, Type "P" and press "ENTER." This will start the Thermospec™ software and bring up the main menu.

11.2.3 To start the RF generator and the plasma torch, select "SETUP." Then select "PLASMA CONTROL PANEL" and press "ENTER." Select "F1."

11.2.4 The default startup time, during which argon purges the spray chamber and the plasma torch, is 90 seconds. The purge time can be reduced to as little as 20 seconds by pressing "PURGE TIME" if the plasma has been off for less than 15 minutes.

11.2.5 After the purge time and power have been set, the automated plasma startup sequence is initiated by pressing "CONTINUE."

11.2.6 If the pump and gas have not been started, select "F2" and start the pump rate at 99 RPM and switch the nebulizer gas to "ON."

11.2.7 The total flush time and rinse time between samples is set at 60 seconds.

11.2.8 Press "LEVELS" if you want to change any of the plasma operating conditions.

11.2.9 The plasma torch should be allowed to run for at least 30 minutes after ignition to reach optimum stability.

11.2 Analysis

11.2.1 Profile

11.2.1.1 Profiling the instrument assures that the optical pathway is clean and in alignment. Emission intensities are essential to accurate data.

11.2.1.2 At the THERMOSPEC main menu, select setup and highlight profile then enter.

11.2.1.3 Begin aspirating 1ppm As standard for analysis.

11.2.1.4 Press F3 to Automatic Profile. When the sample is sufficiently saturating the spray chamber and torch (60 seconds), press "F1", "RUN".

11.2.1.4.1 At the end of the integration, a peak graph will be displayed. Note the intensity reading. This will indicate a need to clean the optical path or adjust the alignment.

11.2.1.4.2 Also note the peak position on the graph. This value should be between 0.1 and –0.1. If it is not, the spectrum shifter must be adjusted, and the profile rerun. Continue this process until the peak position is acceptable.

11.2.1.5 Discontinue the arsenic when profiling is complete. Exit profile to the main menu.

11.3 Autosampler Table Setup

11.3.1 Obtain all data necessary from each case that will be set up on the run, i.e. preparation logs, log-in chain of custody reports from the LIMS. The information contained on these sheets will be used to create the autosampler table.

11.3.2 From the main menu of Thermospec, select "OPERATION," and then "Autosampler Setup," then press enter. The software will prompt for an autosampler table name. An existing table can be edited from this point, or a new autosampler table name can be typed in at this point. Press enter. Press F3 "Add Set." Enter the appropriate run parameters to be used. Parameters that should always be entered here are Method Name, Rinse Time (60 seconds), # of Unknowns in this set, Default Limit Check Table Name (Sample). Press the F1 "EdSamples" key. This will allow for sample IDs to be entered.

11.3.3 Under the column titled "Sample Name," enter the CompuChem sample ID. Be certain the proper check table is selected for each analysis that is assigned. The "F" key allow for various modifications to the autosampler table. Use these keys as necessary. It is <u>very important</u> that the proper QC samples be inserted into the table at the necessary frequencies. See section 9.0 for a description of necessary QC and frequencies.

11.3.4 Also, if the "Alt" key on the keyboard is pressed, additional options will appear. One of these options is "EdSampInfo." This option is selected by pressing the "Alt" key and the "F2" key simultaneously. From this screen, additional comments can be added that will appear on the raw data printout. Under the column titled "Comment," the SDG, client sample ID and dilution of the sample should be entered.

11.3.5 When all entries are finished, press the "F9," Done/Keep key to save the table. It is important to remember the name of the table created, as this will be used to start the analysis.

11.3.6 Create a configuration file to store all analytical data. From the main menu of THERMOSPEC select "SETUP" and highlight "CONFIGURATION." Press "Enter" twice then "F9" four times. This will provide the screen to enter the configuration file name. Configuration file names should identify the analyst and the date of the analysis, as well as the instrument being used (P3 or P4). Use the following scheme (iimmdd) to construct the file name. The letter "i" for initials, the "m" for the month, and the letter "d" for the day. If there are more runs in a day, letters of the alphabet are used as a suffix. In this example: P3JC0922B, identifies a third run on September 22 by analyst JC on instrument P3. JUNK files should be used between analyses to prevent files from being corrupted with other data.

11.3.7 Proceed to analysis. From the main menu of THERMOSPEC select "OPERATION." Highlight "ANALYSIS" then "Enter." Confirm that the correct method is being used and select the autosampler table to be used. Continue to follow on-screen instructions to initiate the run.

IMPORTANT: If the run should fail at any time, remember to change the configuration file name before restarting the analytical run.

11.4 Standardization and Analysis

11.4.1 Start autosampler table and follow the instructions.

11.4.1.1 Select "Operation" and highlight "Analysis."

11.4.1.2 Enter the correct method of analysis and select the autosampler table for samples to be analyzed.

11.4.2 Solid samples and liquid samples have different matrices due to sample preparation procedures. Calibration standards and quality control standards should be prepared to match the matrix of the samples being analyzed. While constructing autosampler tables, give consideration to the matrix of the samples.

11.4.3 Fill all standards cups and QC cups with the appropriate solutions **and enter the information on** the Trace ICP Run Log (Attachment **3**.) The autosampler table provides the information for cup positions. Standards cups positioning may change depending on the number of samples.

Caution: Accuracy of the sequence setup is extremely important. Improper cup positioning will seriously affect analysis to the point that there may not be any salvageable data.

11.4.4 Press "F1" to begin the analytical run.

Caution: Sample racks should be loaded accurately following the rows and positions provided by the autosampler table. Samples in the wrong position can produce erroneous data that may not be detectable.

11.4.5 Although, software drives the instrument operation, if possible the instrument should not be left completely unattended. In the course of the run, matrix spike analyses must be evaluated to determine percent recoveries. Some samples will have concentrations of analytes that are beyond the established linear ranges and will need to be diluted and reanalyzed within those ranges. For samples submitted for North Carolina compliance reporting, dilutions and re-analyses are required whenever target analytes exceed the highest calibration standard. Serial dilution analyses should be evaluated for proper dilution. Responding to the need for dilutions or a PDS analysis quickly within the same analytical run saves time by not requiring an additional run and improves productivity.

11.4.6 Attention should be given to the QC analyses. Analytes may be found to be outside of their established control limits. The loss of one or more analytes does not necessarily mean the run has ended. Early detection of failed analytes by the analyst will prevent lost time and productivity.

11.4.7 Standards cups have limited capacity and should be filled frequently and monitored at all times.

11.4.8 The analytical run is not complete until all final paperwork is complete. The run log must be completed by the analyst and the QC/Standards Preparation log completed for the day, as well as completing the internal chain of custody form **(Attachment 4).**

11.5 Transferring Data

11.5.1 At the completion of the analytical run, exit analysis and return to the THERMOSPEC main menu. Change the configuration file name.

11.5.2 Exit THERMOSPEC and return to Desktop. Double-click on the Explorer icon. While in Explorer, open the STATION directory in the left column, and then open the BIN directory. In the right column, find the name of the file from the analytical run that was just finished. Next, find the MARRS directory in the left column and open that directory. Click on the file name in the right column and copy it to the appropriate directory in MARRS (P3 ICP Trace Files or P4 ICP Trace Files.) Explorer can then be closed.

11.5.3 Transfer the file to the computer used to run the SQUEEZE program. The squeeze function combines two pages of data onto one page. Type "SQZ61E" and follow the instructions to squeeze the data file, and then print the .SQZ file.

11.6 Instrument Shutdown

11.6.1 TJA Trace Analyzer (P3 or P4)

11.6.1.1 Aspirate reagent water for approximately one minute.

11.6.1.2 From the MAIN MENU go to SETUP and PLASMA CONTROL PANEL and press enter.

11.6.1.3 Press F7 for PLASMA SHUT off.

11.6.1.4 Remove pump tubing from peristaltic pumps.

12.0 Data Analysis and Calculations

Calculations must be consistent with the Quality Control SOP 13.4, "Numerical Data Reduction".

12.1 Calculation of the mean or average of a set of values:

$$\overline{X} = \frac{\sum_{i=1}^{n} X_i}{n}$$

where: n = total number of values
x_i = each individual value used to calculate the mean
x = the mean of n

12.2 Calculation of the standard deviation of a set of values:

$$Standard\ deviation = \sqrt{\frac{\sum_{i=1}^{n}\left(X_n - \overline{X}\right)^2}{n-1}}$$

12.3 Calculation of percent recovery:

12.3.1 LCS and surrogates:

$$\%R = \frac{Amount\ found}{Amount\ spiked}\ x\ 100$$

12.3.2 Matrix spikes:

$$\%\ R = \frac{Amount\ in\ spiked\ sample - Amount\ in\ unspiked\ (native)\ sample}{Amount\ spiked}\ x\ 100$$

12.4 Calculation of % RSD

$$\%RSD = \left(\frac{Standard\ deviation}{\overline{X}}\right) \times 100$$

12.5 Calculation of RPD

$$RPD = \frac{|Value\ 1 - Value\ 2|}{(Value\ 1 + Value\ 2)/2} x100$$

12.6 Calculation of %Difference (%D)

$$\%Diff = \frac{Value - \overline{Reference\ value}}{\overline{Reference\ value}} x\ 100$$

12.7 Calculating Dilutions

12.7.1 If a sample concentration exceeds the linear range of the instrument, a dilution reanalysis must be performed. For samples submitted for DOD-QSM and North Carolina compliance reporting, dilutions and re-analyses are required whenever target analytes exceed the highest calibration standard.

12.7.2 Determine a level of dilution that will result in a value within the upper half of the linear range or, for samples submitted for DOD-QSM and North Carolina compliance reporting, within the upper half of the calibration range. This is an acceptable dilution.

12.7.3 A 10x dilution is performed using 1-mL sample plus 9-mL diluent for a total volume of 10 mL. It should be recorded on the run log as "10x (1 mL in 10 mL)."

12.8 Concentration

12.8.1 All results for aqueous samples are reported in µg/L as follows.

$$\text{Concentration } (\mu g/L) = \frac{C \times V \times D}{W}$$

Where: C = Concentration (µg/L) from curve
V = Final volume of digestate (L)
W = Volume of sample (L)
D = Dilution factor

12.8.2 All results for solid samples are reported in mg/Kg as follows.

12.8.2.1 A separate determination of percent solids must be performed.

12.8.2.2 The concentration determined in the digestate is to be reported on the basis of the dry weight of the sample.

$$\text{Concentration (mg/Kg)} = \frac{C * V}{W * S}$$

Where:
C = Concentration (μg/L)
V = Final volume of digestate (L)
W = Weight of wet sample (gm)
S = % Solid / 100
D = Dilution factor

13.0 Method Performance

This method was validated through in-house laboratory studies of method detection limits, instrument detection limits, and precision and accuracy for single analyst. The data are retained by the QA department.

14.0 Pollution Prevention

The solvents used in this procedure pose little threat to the environment when recycled and managed properly. Pollution prevention encompasses any technique that reduces or eliminates the quantity or toxicity of waste at the point of generation. Numerous opportunities for pollution prevention exist in laboratory operation. The EPA has established a preferred hierarchy of environmental management techniques that places pollution prevention as the management option of first choice. Whenever feasible, laboratory personnel should use pollution prevention techniques to address their waste generation. When wastes cannot be feasibly reduced at the source, the Agency recommends recycling as the next best thing. See SOP 12.1, "Hazardous Waste Disposal" requiring laboratory procedures for recycling waste streams.

15.0 Waste Management

It is the laboratory's responsibility to comply with all federal, state, and local regulations governing waste management, particularly the hazardous waste identification rules and land disposal restrictions, and to protect the air, water, and land by minimizing and controlling all releases from fume hoods and bench operations. Compliance with all sewage discharge permits and regulations is also required.

Samples preserved with HCl, HNO_3, or H_2SO_4 to pH <2 are hazardous and must be handled as hazardous waste.

Refer to the Hazardous Waste Management and Safety SOPs located in the lab.

16.0 References

16.1 "Test Methods for Evaluating Solid Wastes: Physical/Chemical Methods", SW-846, 3rd Edition, Update III, 12/96, Method 6010B**, Update IV, February 2007, Method 6010C, Revision 3**

16.2 Standard Methods for the Examination of Water and Wastewater, 20th (1998) Edition, Method 1080

16.3 Code of Federal Register, 40 CFR, Part 136, "Guidelines for Establishing Test Procedures for Priority Pollutants"

16.4 Quality Control SOP 13.6, "Proper Documentation Procedures"

16.5 Quality Control SOP 13.4, "Numerical Data Reduction"

16.6 NELAC Standards, **effective July** 2003

16.7 EPA QA/G6: Guidance for the Preparing of Standard Operating Procedures (SOPs) EPA/600/B-07/001, April 2008.

16.8 CompuChem Quality Manual, Revision **11**, **June 23, 2008 and Revision 12, August 3, 2009**

16.9 Sample Control SOP 4.6, "Storing Samples"

16.10 TJA Trace Analyzer Set-up and Operating Manual

16.11 Department of Defense Quality Systems Manual of Environmental Laboratories, Final Version 3, January 2006

17.0 Attachments as Tables, Diagrams, and Flowcharts

17.1 Attachment 1 – Analyte Concentration Equivalents Arising from Interference at the 100 mg/L Level

17.2 Attachment 2 – Daily Standards/QC Preparation for Trace ICP (P3&P4)

17.3 Attachment 3 – Example Trace ICP Run Log (P3)

17.4 Attachment 4 – Internal Chain of Custodies for Metals Analysis

17.5 Attachment 5 – **Target Analytes**

Attachment 1

Analyte Concentration Equivalents Arising from Interference at the 100-mg/L Level

Analyte	Wavelength (ηm)	Al	Ca	Cr	Cu	Fe	Mg	Mn	Ni	Tl	V
Aluminum	308.215	--	--	--	--	--	0.21	--	--	_--	1.4
Antimony	206.833	0.47	--	2.9	--	0.08	--	--	--	0.25	0.45
Arsenic	193.696	1.3	--	0.44	--	--	--	--	--	--	1.1
Barium	455.403	--	--	--	--	--	--	--	--	--	--
Beryllium	313.042	--	--	--	--	--	--	--	--	0.04	0.05
Boron	249.773	0.04	--	--	--	0.32	--	--	--	--	--
Cadmium	226.502	--	--	--	--	0.03	--	--	0.02	--	--
Calcium	317.933	--	--	0.08	--	0.01	0.01	0.04	--	0.03	0.03
Chromium	267.716	--	--	--	--	0.003	--	0.004	--	--	0.04
Cobalt	228.616	--	--	0.03	--	0.005	--	--	0.03	0.15	--
Copper	324.754	--	--	--	--	0.003	--	--	--	0.05	0.02
Iron	259.940	--	--	--	--	--	0.12	--	--	--	--
Lead	220.353	0.17	--	--	--	--	--	--	--	--	--
Magnesium	231.604	--	0.02	0.11	--	0.13	--	0.25	--	0.07	0.12
Manganese	196.026	0.005	--	0.01	--	0.002	0.002	--	--	--	--
Molybedenum	202.030	0.05	--	--	--	0.03	--	--	--	--	--
Nickel	279.079	--	--	--	--		--	--	--	--	--
Selenium	257.610	0.23	--	--	--	0.09	--	--	--	--	--
Silicon	288.158	--	--	0.07	--	--	--	--	--	--	0.01
Sodium	588.995	--	--		--	--	--	--	--	0.08	--
Thallium	190.864	0.30	--		--	--	--	--	--	--	--
Vanadium	292.402	--	--	0.05	--	0.005	--	--	--	0.02	--
Zinc	213.856	--	--	--	0.14	--	--	--	0.29	--	--

[a] Dashes indicate that no interference was observed even when interferents were introduced at the following levels:

Al, Ca, Mg - 1000 mg/L; Ca, Fe - 1000 mg/L; Cr, Cu, Mn, Tl, V - 200 mg/L

[b] The figures recorded as analyte concentrations are not the actual observed concentrations; to obtain those figures, add the listed concentration to the interferent figure.

ORIGINAL MASTER COPY CONTROLLED COPY
If words above are not highlighted, this is an uncontrolled copy of this document.

Attachment 2

Daily Standards/QC Preparation Log for Trace ICP (P3 & P4) 1 of 3 CompuChem a division of Liberty Analytical Corp. Worksheet 1 P(6)

STANDARDS and REAGENTS TRACEABILITY

Seq. File Name:_____

	Ref #*	Manufacturer	Lot #	Expiration Date
HNO_3 [Baker Instra-analyzed Trace-Metals grade]	1M2-182-01	JT Baker	C47031	03/10
HCl [Baker Instra-analyzed Trace-Metals grade]	1M2-182-02	Caledon	60544	03/10
SM-770-027 multi-element standard mix (RSTD-1)	9G08002	High Purity**	0916328	06/15/10
SM-770-028 part A multi-element standard mix (RSTD-2A)	8K07003	High Purity**	0830416	10/31/09
SM-770-028 part B multi-element standard mix (RSTD-2B)	8K07004	High Purity**	0830417	10/31/09
SM-770-029 part A multi-element standard mix (RSTD-3A)	9G08004	High Purity**	0805135	04/16/10
SM-770-029 part B multi-element standard mix (RSTD-3B)	9G08005	High Purity**	0906204	10/16/10
SM-770-030 multi-element standard mix (RSTD-4)	9G08001	High Purity**	0916327	06/15/10
SPEX-R multi-element standard mix	9G04010	High Purity**	0916301	06/15/10
ICP-AES-CRQL-R multi-element standard mix	8K07005	High Purity**	0830420	10/31/09
ICV1 multi-element standard mix	1M2-187-5	EPA	0307	03/10
ICSA multi-element standard mix	7M1-40-26	EPA	1206	03/10
ICSB multi-element standard mix	7M1-40-27	EPA	0203	03/10
SM-770-031 multi-element standard mix (PDS-R)	7M1-41-1	High Purity**	0826013	09/17/09
ARSENIC (As) 1,000 PPM single-element standard	9F17001	High Purity**	0911221	12/05/10
Internal Mix	9G08003	High Purity**	0910711	04/20/10
XCL-LCS-10X R multi-element mix	8H31001	High Purity**	0832331	11/20/09
XCL-20 multi-element mix	1M2-186-12	High Purity**	0825902	09/17/09
SM-770-040 multi-element CCV mix (Soln A)	9F09004	High Purity**	0912103	05/01/10
SM-770-040 multi-element CCV mix (Soln B)	9F09004	High Purity**	0912104	05/01/10

Multi-Element Stock Standard Concentrations:

Stock Standard	Analyte Concentrations (µg/mL)
RSTD-1 multi-element standard mix	Cd:1,000 Cr:1,000 Cu:1,000 Pb:1,000 Ni:1,000 Se:1,000 Ag:100 Tl:1,000 Zn:1,000
RSTD-2A/2B multi-element standard mix	Part A: As:1,000 Ba:1,000 Be:1,000 Co:1,000 Mn:1,000 Mo:1,000 V:1,000 Part B: Fe:25,000
RSTD-3A/3B multi-element standard mix	Part A: Ca:10,000 Mg:10,000 K:10,000 Na:10,000 Part B: Al:10,000
RSTD-4 multi-element standard mix	Sb:1,000 Bi:1,000 B:1,000 Sn:1,000 Ti:1,000
SPEX-R multi-element standard mix	Mo:1,000 Sn:1,000 Bi:1,000 Ti:1,000 B:1,000
ICP-AES-CRQL-R multi-element standard mix	Ag:10 Be:5 Cd:5 Co:50 Cr:10 Cu:25 Mn:15 Ni:40 Tl:25 V:50 Zn:60 Pb:10 Se:35 As:10 Sb:60
PDS-R multi-element standard mix	Al:400 Ba:400 Ag:20 Be:10 Cd:10 Co:100 Cr:20 Cu:50 Fe:200 Mn:30 Ni:80 Tl:20 V:100 Zn:40 Pb:6 Se:10 As:20 Sb:120
Internal Mix	Li:50,000 Y:250

Entered By: B LAKE

Reviewed By: _____ Date: _____

*Ref# = Logbook ID, Page number, and item number from Materials Receipt Log

**High Purity is abbreviated "HP" on reporting forms

05/23/07:jbb

Attachment 2 (continued)

Daily Standards/QC Preparation Log for Trace ICP (P3 & P4) 2 of 3 CompuChem a division of Liberty Analytical Corp. Worksheet 1 P(6)

Standard Lot Number*	Preparation instructions	Resultant Analyte Conc. (µg/L)
S0/ICB/CCB–08 2409 - BWL	Place in a 500 mL volumetric flask: 100 mL deionized water, 20 mL concentrated HNO_3, and 100 mL concentrated HCl. Bring up to volume with deionized water. Transfer to a 2L Teflon bottle and add 1.5L deionized water. Final volume 2 L. Prepare as needed.	N/A
RSTD-1– 08 24 09 - BWL	In a 200 mL volumetric flask, combine 150 mL deionized water, 2 mL concentrated HNO_3, and 10 mL concentrated HCl. Pipet 0.4 mL RSTD-1 into flask. Bring up to 200 mL volume with deionized water. Prepare as needed.	Cd:2,000 Cr:2,000 Cu:2,000 Pb:2,000 Ni:2,000 Se:2,000 Ag:200 Tl:2,000 Zn:2,000
RSTD-2– 08 24 09 - BWL	In a 2 00 mL volumetric flask, combine 150 mL deionized water, 2 mL concentrated HNO_3, and 10 mL concentrated HCl. Pipet 0.4 mL each RSTD-2A and RSTD-2B into flask. Bring up to 200 mL volume with deionized water. Prepare as needed.	As:2,000 Ba:2,000 Be:2,000 Co:2,000 Fe:50,000 Mn:2,000 Mo:2,000 V:2,000
RSTD-3– 08 24 09 - BWL	In a 200 mL volumetric flask, combine 150 mL deionized water, 2 mL concentrated HNO_3, and 10 mL concentrated HCl. Pipet 2.0 mL each RSTD-3A and RSTD-3B into flask. Bring up to 200 mL volume with deionized water. Prepare as needed.	K:100,000 Na:100,000 Al:100,000 Mg:100,000 Ca:100,000
RSTD-4– 08 24 09 - BWL	In a 200 mL volumetric flask, combine 150 mL deionized water, 2 mL concentrated HNO_3, and 10 mL concentrated HCl. Pipet 0.4 mL RSTD-4 into flask. Bring up to 200 mL volume with deionized water. Prepare as needed.	Sn:2,000 Bi:2,000 Ti:2,000 Sb:2,000 B:2,000
ICV1–08 24 09 - BWL	Place in a 500 mL volumetric flask: 300 mL deionized water, 5 mL concentrated HNO_3, and 25 mL concentrated HCl. Pipet 50.0 mL ICV1 into flask and 0.55 mL Compuchem SPEX-R. Bring up to volume with deionized water. Transfer to a 500mL Teflon bottle. Final volume 500 mL. Prepare as needed.	Al:2,521 Ba:497 K:10,021 Mg:6,074 Na:10,097 Ca:10,026 Ag:501 Be:495 Cd:496 Co:499 Cr:490 Cu:492 Fe:5,082 Mn:499 Ni:503 Tl:1,028 V:501 Zn:1,025 Pb:1002 Se:1,029 As:999 Sb:994 Mo:1,100 Sn:1,100 Bi:1,100 Ti:1,100 B:1,100
CCV/CVS1–08 25 09 - BWL	Place in a 500-mL volumetric flask: 300 mL deionized water, 20 mL concentrated HNO_3 and 100 mL concentrated HCl. Add 50 ml of SM-770-40 Soln A and Soln B. Bring up to volume with deionized water. Transfer to a 2000mL Teflon bottle and add 1.5 L of deionized water. Prepare as needed.	Al:50,000 Ba:1,000 K:50,000 Mg:50,000 Na:50,000 Ca:50,000 Ag:100 Be:1,000 Cd:1,000 Co:1,000 Cr:1,000 Cu:1,000 Fe:25,000 Mn:1,000 Ni:1,000 Tl:1,000 V:1,000 Zn:1,100 Pb:1,000 Se:1,000 As:1,000 Mo:1,000 Sn:1,000 Bi:1,000 Ti:1,000 Sb:1,000 B:1,000
LRS– 08 17 09 - BWL	In a 500 mL volumetric flask, combine 200 mL deionized water, 5 mL concentrated HNO_3 and 25 mL concentrated HCl. Pipet 0.25 mL PDS-R, 0.1 mL RSTD-3A, and 10 µL Compuchem SPEX-R into flask. Bring up to volume with deionized water and transfer to a 500mL Teflon bottle. Final volume 500 mL. Prepare as needed.	Al:200 Ba:200 K:2,000 Mg:2,000 Na:2,000 Ca:2,000 Ag:10 Be:5 Cd:5 Co:50 Cr:10 Cu:25 Fe:100 Mn:15 Ni:40 Tl:10 V:50 Zn:20 Pb:3 Se:5 As:10 Mo:20 Sn:20 Bi:20 Ti:20 Sb:60 B:20
As– 08 17 09 - BWL	In a 100 mL volumetric flask, combine 50 mL deionized water, 1 mL concentrated HNO_3, 5 mL concentrated HCl, and 0.1 mL 1000-ppm As standard. Bring to final 100 mL volume with deionized water and transfer to Teflon bottle.	As:1,000

Standard Solutions Prepared By: _____

Entered By: _____ B LAKE _____

Reviewed By: _____ Date: _____

*Standard Lot Number consists of standard ID, date prepared, and initials of preparer.

05/23/07:jbb

Attachment 2 (continued)

Daily Standards/QC Preparation Log for Trace ICP (P3 & P4) 3 of 3 CompuChem a division of Liberty Analytical Corp. Worksheet 1 P(6)

Standard Lot Number*	Preparation instructions	Resultant Analyte Conc. (µg/L)
ICSA-_08 24 09-BWL_	In a 500-mL volumetric flask, combine 350 mL deionized water, 5 mL concentrated HNO_3, and 25 mL concentrated HCl. Pipet 50.0 mL ICSA into flask. Bring up to volume with deionized water and transfer to a 500mL Teflon bottle. Final volume 500 mL.	Al:244,100 Ba:2 Ca:234,900 Co:4 Cr:43 Cu:23 Fe:95,600 Mg:247,500 Mn:19 Ni:21 Zn:28 Pb:10
ICSAB-_08 24 09-BWL_	In a 500-mL volumetric flask, combine 350 mL deionized water, 5 mL concentrated HNO_3, and 25 mL concentrated HCl. Pipet 50.0 mL ICSA and 50.0 mL ICSB into flask. Add 0.5 mL Compuchem SPEX-R. Bring up to volume with deionized water and transfer to a 500mL Teflon bottle. Final volume 500 mL.	Ag:206 Al:241,100 Ba:495 Be:475 Ca:231,100 Cd:940 Co:461 Cr:511 Cu:548 Fe:94,800 Mg:251,100 Mn:502 Ni:984 Tl:103 V:494 Zn:1028 Pb:61 Se:53 Sb:589 As:101 Sn:1,000 Bi:1,000 Mo:1,000 Ti:1,000 B:1,000
EPA-CRI-_08 24 09-BWL_	In a 500 mL volumetric flask, combine 300 mL deionized water, 5 mL concentrated HNO_3 and 25 mL concentrated HCl. Pipet 0.50 mL ICP-AES-CRQL-R and 5 µL Compuchem SPEX-R into flask. Bring up to volume with deionized water and transfer to a 500mL Teflon bottle. Final volume 500 mL. Prepare as needed.	Ag:10 Be:5 Cd:5 Co:50 Cr:10 Cu:25 Mn:15 Ni:40 Tl:25 V:50 Zn:60 Pb:10 Se:35 As:10 Sb:60 Sn:10 B:10 Mo:10 Bi:10 Ti:10
EPA-ASPB-_11 14 08-QF_	In a 200 mL volumetric flask, combine 100 mL deionized water, 2 mL concentrated HNO_3 and 10 mL concentrated HCl. From 1,000-ppm standards, pipet 100 µL Pb and 20 µL As into flask. Bring up to volume with deionized water. Final volume 200 mL. Prepare as needed.	Pb:500 As:100 (CRI for FLEX 1341.1 and 1342.0)
COMM-CRI-_06 23 09-EAM_	In a 500 mL volumetric flask, combine 300 mL deionized water, 5 mL concentrated HNO_3 and 25 mL concentrated HCl. Pipet 0.50 mL PDS-R and 25 µL Compuchem SPEX-R into flask. Bring up to volume with deionized water and transfer to a 500mL Teflon bottle. Final volume 500 mL. Prepare as needed.	Al:400 Ba:400 Ag:20 Be:10 Cd:10 Co:100 Cr:20 Cu:50 Fe:200 Mn:30 Ni:80 Tl:20 V:100 Zn:40 Pb:6 Se:10 As:20 Mo:50 Sn:50 Bi:50 Ti:50 Sb:120 B:50
P3INTSTD-_08 04 09-BWL_	In a 10 L container, combine 8 L deionized water, 400 mL concentrated HNO_3, and 200 mL Internal Mix. Fill with deionized water. Final volume 10 L.	Li:1,000,000 Y:5,000
P4INTSTD-_07 08 09-JCF_	In a 10 L container, combine 8 L deionized water, 400 mL concentrated HNO_3, and 200 mL Internal Mix. Fill with deionized water. Final volume 10 L.	Li:1,000,000 Y:5,000

Dissolved Metals only:	Prepared By	Date Prepared	Preparation Instructions
LCS	NA	NA	Add 5.0 mL of XCL-LCS-10XR solution to 45.0 mL acidified water (1% HNO_3 + 5% HCl).
Prep Blank	NA	NA	Use acidified water (S0/ICB/CCB).
Sample Spike	NA	NA	Add 0.1 mL of XCL-20 to 9.9 mL of sample.

Standard Solutions Prepared By: _____

Entered By: _____ B LAKE _____

Reviewed By: _____ Date: _____

*Standard Lot Number consists of standard ID, date prepared, and initials of preparer.

05/23/07:jbb

Attachment 3

Daily Instrument Profile: **Maintenance**:_____
Nebulizer pressure:_____ _____
Peak position:_____ _____
Peak intensity:_____ _____
Vernier position:_____ _____

Page___of____

Method(s) (circle): ILM04.1 ILM05.4 SW-846 MCAWW 200.7 _____

Operator:_____ **Date/Time**:_____ to _____

Legend	
↑	Specified element(s) fail(s) high
↓	Specified element(s) fail(s) low
RR	Re-run sample(s) neat
RR #x	Re-run at a #-fold dilution
#x	Sample run at a #-fold dilution (aliquot of sample diluted with acidified water)
L	Matrix = leachate
W	Matrix = water
S	Matrix = solid

SDG	Matrix	Comments

ICP Run Log (P4)

File Name:

Sample ID	Client ID	Sample Type	DF	Date	Time	SDG	Action Needed

Reviewed By: _____ Date: _____

The presence of the Chemist's/Analyst's employee ID number, or signature, on this run log attests that strict compliance with the method's SOP has occurred. Any SOP deviations require documentation by the responsible chemist/analyst together with the chemist's/analyst's initials and the initials of the lab supervisor and a QA department representative, signifying approval of the deviation.

Attachment 4

Internal COC for Metals Analysis

CompuChem, a Division of Liberty Analytical Corp.

DIGESTATE COC

DEPT: INORGANICS

BATCH: _____

	COMPUCHEM NUMBER	CLIENT SAMPLE ID	PARAMETER	
1			METALS	
2			METALS	
3			METALS	
4			METALS	
5			METALS	
6			METALS	
7			METALS	
8			METALS	
9			METALS	
10			METALS	
11			METALS	
12			METALS	
13			METALS	
14			METALS	
15			METALS	
16			METALS	
17			METALS	
18			METALS	
19			METALS	
20			METALS	
21			METALS	
22			METALS	
23			METALS	
24			METALS	
25			METALS	

	RELINQUISHED BY	RECEIVED BY	DATE/TIME	REASON

Attachment 4 (continued)

Internal COC for Mercury Analysis

CompuChem, a Division of Liberty Analytical Corp.

DIGESTATE COC

DEPT: INORGANICS

BATCH: _____

	COMPUCHEM NUMBER	CLIENT SAMPLE ID	PARAMETER	
1			HG	
2			HG	
3			HG	
4			HG	
5			HG	
6			HG	
7			HG	
8			HG	
9			HG	
10			HG	
11			HG	
12			HG	
13			HG	
14			HG	
15			HG	
16			HG	
17			HG	
18			HG	
19			HG	
20			HG	
21			HG	
22			HG	
23			HG	
24			HG	
25			HG	

	RELINQUISHED BY	RECEIVED BY	DATE/TIME	REASON

Attachment 5

Analyte	
Aluminum	Al
Antimony	Sb
Arsenic	As
Barium	Ba
Beryllium	Be
Cadmium	Cd
Calcium	Ca
Chromium	Cr
Cobalt	Co
Copper	Cu
Iron	Fe
Lead	Pb
Magnesium	Mg
Manganese	Mn
Nickel	Ni
Potassium	K
Selenium	Se
Silver	Ag
Sodium	Na
Thallium	Tl
Vanadium	V
Zinc	Zn
Bismuth	Bi
Molybdenum	Mo
Tin	Sn
Titanium	Ti
Boron	B

CompuChem
A Division Of
Liberty Analytical Corp.

501 Madison Avenue
Cary, NC 27513

NELAP accredited

SOP DOCUMENTATION FORM

This form must accompany all new and revised Standard Operating Procedures (SOPs) when you turn them in to Quality Assurance for review. Please fill out the entire block below (except effective date).

This is a new procedure _____ revised procedure ✓ outdated procedure (archive) _____

- Procedure Code: SPP -074 SOP Section #: 3.3.1 Revision #: 21

SOP Title: Mercury in Water, Manual Digestion Procedure for EPA CLP, SW-846, and MCAWW

Effective date: (QA fills in) 04-05-2010

- Procedure prepared by: Bob Mencia Date: 03-31-2010
- Procedure approved by: (If the manager prepared the SOP, a qualified second party should sign) Date: 04-02-2010
- Reason for change: Address comment from SC DHEC SOP review plus changes from internal review
- This procedure meets the requirements of the following approved method references: USEPA CLP SOW ILM04.1 and ILM05.4; SW 846 Update III, 3rd Edition, Method 7470A, Revision 1, 9/94; MCAWW, Method 245.1, Revision 3.0, 1994

Procedure approved by a QA Representative (unless QA Representative signed above):

_____ Date: _____

On an annual basis: Lab managers are required to review lab practices and revise the SOP if necessary. If no revision is necessary, indicate by your signature that the SOP has been reviewed.

Annual Review—Signature: _____ Date: _____

Annual Review—Signature: _____ Date: _____

Annual Review—Signature: _____ Date: _____

Annual Review—Signature: _____ Date: _____

Sample Preparation Procedure -074: Mercury in Water, Manual Digestion Procedure for EPA CLP, SW-846, and MCAWW

Table of Contents

SECTION	PAGE NO.
Section 1.0 – Scope and Application	2
Section 2.0 – Summary of Method	2
Section 3.0 – Definitions	2-3
Section 4.0 – Interferences	4
Section 5.0 – Safety	4
Section 6.0 – Equipment and Supplies	4
Section 7.0 – Reagents and Standards	4-6
Section 8.0 - Sample Preservation and Storage	6-7
Section 9.0 – Quality Control	7
Section 10.0 – Calibration and Standardization	8
Section 11.0 – Procedure	8-10
Section 12.0 – Data Analysis and Calculations	10
Section 13.0 – Method Performance	10
Section 14.0 – Pollution Prevention	10
Section 15.0 – Waste Management	10-11
Section 16.0 – References	11
Section 17.0 – Attachments as Tables, Diagrams and Flowcharts	11-12
Attachment 1	13-15
Attachment 2	16
Attachment 3	17
Attachment 4	18

ORIGINAL MASTER COPY CONTROLLED COPY
If words above are not highlighted, this is an uncontrolled copy of this document.

Sample Preparation Procedure -074: Mercury in Water, Manual Digestion Procedure for EPA CLP, SW8-46, and MCAWW

1.0 Scope and Application

This Standard Operating Procedure (SOP) describes the preparation of samples for the determination of mercury in drinking, surface, domestic, and industrial waste water. The SOP is compliant with the requirements of the EPA Contract Laboratory Program (CLP) SOW, SW-846, and Methods of Chemical Analysis of Water and Waste (MCAWW).

Staff members performing the procedures described in this SOP are responsible for reading, understanding, and complying with the SOP requirements. Supervisors are responsible for directing the analyst to the controlled SOP, and providing adequate explanation of the material contained therein.

This procedure is restricted to use by or under the supervision of analysts experienced in the instrumentation or preparative methods and who have demonstrated the ability to generate acceptable results through QC samples and analyst capability studies.

2.0 Summary of Method

The samples and standards are digested in a water bath at 95 ^{o}C. Potassium permanganate and potassium persulfate are added to the acidified sample to ensure complete oxidation of any form of mercury that may be present in the sample. The sample volume at the end of the sample prep is not adjusted. The final volume is an effective volume. All samples and standards are digested using the same total volumes of reagents.

3.0 Definitions

3.1 Mercury – as analyzed by this method, both inorganic and organic forms of mercury are detected. Since organo-mercury compounds do not respond to the cold vapor atomic absorption technique, they must first be broken down and converted to mercuric ions.

3.2 Method detection limit (MDL) – The minimum concentration of an analyte that can be measured and reported with 99% confidence that the analyte concentration is greater than zero and is determined from analysis of a sample in a given matrix containing the analyte (40 CFR, Part 136, Appendix B.) The test concentration used to determine the MDL must be greater than the calculated MDL and less than ten times the calculated MDL. The test concentration must not exceed the Reporting Limit (RL) (See Section 3.2). The calculated MDL must be less than the Reporting Limit. Method detection limits are subject to change.

ORIGINAL MASTER COPY CONTROLLED COPY
If words above are not highlighted, this is an uncontrolled copy of this document.

3.3 Reporting Limit – The laboratory reporting limit is based on the lowest multipoint calibration standard concentration. The RL is subject to change (except for the EPA CLP), but must remain at or above the lowest point in the calibration. Any elevation of the RL must be discussed with the project manager to ensure compliance with client requirements. For samples analyzed under DoD-QSM, the RL must be greater than or equal to three times the MDL. For the EPA CLP the reporting limit is the Contract Required Quantitation Limit (CRQL) for ILM05.4 and the Contract Required Detection Limit (CRDL) for ILM04.1.

3.4 Reporting Units – µg/L for water

3.5 Sample Delivery Group (SDG) – whichever is the most frequent of the following:

- each 20 field samples within a case, or
- each 7 calendar day period (14 calendar days if requested by the client) during which field samples in a case are received beginning with the receipt of the first sample in the SDG.

NOTE: The DOD-QSM and SC DHEC do not accept the SDG approach, unless the samples are prepared in a single batch. When a group of up to 20 field samples of a similar matrix are prepared as one batch, method-specified QC samples such as a method blank, laboratory control sample, matrix spike, matrix spike duplicate, and matrix duplicate must also be prepared together. If samples are batched together from different sites, project-specific QC must be processed.

3.5 Digestion Batch – a group of up to 20 field samples of a similar matrix, method-specified QC samples such as a method blank, laboratory control sample, matrix spike, matrix spike duplicate, and matrix duplicate prepared together at the same time.

3.6 SC DHEC – South Carolina Department of Health and Environmental Control

3.7 DOD-QSM – Department of Defense Quality Systems Manual

3.8 NCDENR – North Carolina Department of Environment and Natural Resources

4.0 Interferences

4.1 Samples high in chloride require additional permanganate (as much as 25 mL). Care must be taken so that the free chlorine evolved during the oxidation step is absent before the sample is analyzed. This may be accomplished by the excess addition of hydroxylamine hydrochloride at the instrument and the purging of the headspace in the reaction vessel before the addition of the stannous chloride during the reduction step immediately prior to analysis.

Warning: A false positive mercury signal will result if this step is not maintained since chlorine absorbs mercury radiation at the 253.7 ηm wavelength.

5.0 Safety

5.1 Appropriate protective equipment and clothing must be used under the assumption that all samples are potentially hazardous. During sample preparation, safety glasses, gloves and lab coats are a minimum requirement. The persistent presence of noxious odors may be indicative of failure of the laboratory ventilation system and must be reported to a supervisor or manager. Perform all digestions in a fume hood.

5.2 Laboratory staff must review the Chemical Hygiene Plan for general safety policies, and Material Safety Data Sheets (MSDS) for reagents used in the laboratory. The Chemical Hygiene Plan and the MSDS are located in the quality assurance department.

6.0 Equipment and Supplies

6.1 300 mL BOD bottles

6.2 Commercially available turkey roaster (hot plate equivalent) – Adjustable and capable of maintaining a temperature of 90 – 95 ^{o}C.

6.3 Watch glasses

6.4 100 – mL Volumetric flasks

6.5 Graduated cylinders

7.0 Reagents and Standards

Note: All purchased chemicals and reagents that do not arrive with an expiration date, must be assigned an expiration date three years from receipt. All lab prepared regents must be assigned an expiration date one year from preparation. All standards and reagents are subject to change in vendor and in concentration.

ORIGINAL MASTER COPY CONTROLLED COPY
If words above are not highlighted, this is an uncontrolled copy of this document.

Record all reagent and standard preparations on the Standards/QC Preparation Log (Attachment 1). Follow instructions for appropriate standard lot number assignment.

7.1 Reagent water - All water used during preparation should be reagent-grade Type I with regard to resistivity of >10 megohm (20th Edition of Standards Methods, Method 1080), and referred throughout this SOP as reagent water.

7.2 Concentrated sulfuric acid (H_2SO_4) - J.T. Baker, Instra-analyzed or equivalent

7.3 Concentrated nitric acid (HNO_3) - J.T. Baker, Instra-analyzed or equivalent

7.4 Potassium permanganate - J.T. Baker, Instra-analyzed or equivalent

7.4.1 Potassium permanganate (5% solution, w/v) – Dissolve 100 grams of $KMnO_4$ crystals in 2000 mL of reagent water.

7.5 Potassium persulfate - J.T. Baker, Instra-analyzed or equivalent

7.5.1 Potassium persulfate (5% solution, w/v) – Dissolve 50 grams of $K_2S_2O_8$ crystals in 1000 mL of reagent water.

7.6 Mercury stock solution – commercially available custom standard with a concentration of 20 μg/mL mercury.

7.7 Mercury intermediate standard (100 ppb) -- To a 100 mL volumetric flask add 0.5 mL of the mercury stock solution, 2.5 mL concentrated HNO_3, and bring to volume with reagent water. Prepare daily.

7.7.1 Prepare a calibration curve daily. This curve must be prepped along with the samples. This curve consists of the following, all prepared to 100 mL final volume:

- 0 ppb - Blank 100 mL of reagent water. The (0) standard is used as the ICB/CCB
- 0.2 ppb - 200 μL of 100 ppb standard. The (0.2) standard is used as the CRI/CRA or reporting limit standard.
- 0.5 ppb - 500 μL of 100 ppb standard.
- 1.0 ppb - 1.0 mL of 100 ppb standard.

- 5.0 ppb - 5.0 mL of 100 ppb standard. The (5.0) standard is used as the CCV.

- 10.0 ppb - 10.0 mL of 100 ppb standard.

The standards have all reagents added to them and are prepped in the water bath along with the samples.

7.7.2 Prepare an ICV for each day. The ICV is a separate source standard that is used to verify the validity of the calibration curve.

- (ICV) -1.0 mL of ICV-5 standard and 99 mL of reagent water.

Add reagents and prep in the water bath in the same manner as the samples.

7.8 The laboratory Control Sample (LCS) is prepared by adding 100 mL of reagent water and 3.0 mL of 100 ppb mercury solution to a properly cleaned and labeled BOD bottle. (An aqueous LCS is not required for CLP analyses.)

7.9 The matrix spike is prepared by adding 1.0 mL of 100 ppb mercury solution to 100 mL of the designated field sample.

7.10 The duplicate sample is prepared by aliquoting an additional 100ml of a field sample in the SDG.

8.0 <u>Sample Preservation and Storage</u>

8.1 Samples are preserved and stored according to the tables in Sample Control SOP 4.1, "Receiving Samples" and 4.6, "Storing Samples." Sample holding times are also listed.

8.2 Aqueous samples received for mercury analyses are checked for acid preservation upon receipt. Metals samples not preserved at the time of collection with HNO_3 to a pH <2 may be preserved in-house. Samples must be preserved, with thorough mixing, at least 24 hours prior to analysis.

8.2 For MCAWW, it is recommended that samples be sent to the lab as soon as possible after collection and acid preserved upon receipt. After acidification, the samples should be mixed, held for 16 hours, and then the pH verified to be ≤ 2. If the sample pH is > 2, repeat the process.

8.3 Aqueous samples are stored at 4°C ± 2°C until sample preparation.

8.3 Samples (other than those received for CLP analysis) must be digested and analyzed within 28 days of sampling. CLP samples must be digested and analyzed within 26 day of the validated time of sample receipt (VTSR).

9.0 Quality Control

Acceptance criteria and corrective action for QC samples is detailed in the instrument procedure SOP, IP 005, "Automated Cold Vapor Determination for Mercury by SW-846 7470A and 7471A/7471B."

9.1 Prepare one blank per preparation batch of up to 20 samples to determine if any contamination is occurring.

9.2 Prepare one aqueous Laboratory Control Sample (LCS) for every preparation batch of up to 20 samples.

9.3 Prepare one duplicate sample for every preparation batch of up to 20 samples.

9.4.1 The NCDENR requires a 10% duplicate frequency which is met by the 5% MS/MSD frequency requirement.

9.4 Prepare two matrix spikes for every SW-846 preparation batch of up to 20 samples. Prepare one matrix spike for every CLP SDG. For MCAWW, prepare one matrix spike for a minimum of 10% of the samples or one matrix spike per preparation batch, whichever is more frequent.

9.6 Contingency

9.6.1 If due to a lab accident or to QC failure a re-preparation is required for the sample and insufficient volume remains, the Project Manager must be alerted and will contact the client for direction on how to proceed.

9.6.2 If persistent contamination occurs in the laboratory, analyses must be halted until the source can be identified and isolated. When the contamination issue is resolved, sample analyses may proceed.

9.6.3 Any other issues that potentially affect data quality should be addressed with the Project Manager.

10.0 Calibration and Standardization

10.1 Ensure that the automated pipette has been calibrated within the month. If not, calibrate the pipette using the procedure in SOP 9.1, "Calibrating Automatic Pipettes in the Inorganic Laboratory".

11.0 Procedure

11.1 Documentation must follow the requirements in Quality Control SOP 13.6, "Proper Documentation Procedures".

11.2 Be careful not to contaminate samples in the laboratory. Samples should not be exposed to any condition that could result in mercury contamination.

11.3 Glassware to be used for mercury sample preparation should be prepared following Glassware Preparation SOP 10.2, "Preparing Glassware for the Inorganics Laboratory."

11.4 Inspect all glassware before use. Do not use any glassware with visible residues, dust, or discoloration in this preparation procedure.

11.5 Immediately prior to use, rinse glassware with 1:1 nitric acid, followed by reagent water.

CAUTION: Do not touch the inside walls of any glassware, even with gloves on. Allow the glassware to drain thoroughly. Do not attempt to wipe out or dry the glassware.

11.6 Turn on the turkey roaster. Fill it approximately one quarter full with water. Set the temperature for the maintenance of 95° C ± 5°C sample temperature. Monitor the temperature of sample digestion using a calibrated alcohol thermometer.

11.6.1 Insert the thermometer through the top of the turkey roaster. Ensure that the thermometer is submerged in the water but is not in contact with the turkey roaster. Record the temperature on the Metals/Mercury Preparation Log (Attachment 2).

11.7 Request samples scheduled to be prepared that day from the sample custodian. A properly completed internal chain-of-custody form is given to the sample custodian (Attachment 3). The form is placed with the samples when they are delivered to the preparation work area. The form is to remain with the samples at all times and it must be properly signed and dated by the preparation personnel as having received the samples listed. The form must be signed and dated again as samples are relinquished back to the sample custodian.

11.8 Transfer 100 mL or an appropriate aliquot of the sample diluted to 100 mL into a 300-mL BOD bottle. Thoroughly shake the sample container before aliquoting.

11.81. For a sample with low volume, adjust the sample volume to maintain the required sample to reagent ratios.

11.8.2 If multi-phase samples are received, notify the Project Manager who will contact the client for directions on how to proceed.

11.8.3 The Method Blank is prepared by adding 100 mL of reagent water to a properly cleaned and labeled BOD bottle.

11.8.4 The Laboratory Control Sample (LCS) is prepared by adding 100 mL of reagent water and 3.0 mL of 100 ppb mercury solution (see Section 7.7) to a properly cleaned and labeled BOD bottle.

11.8.5 The Matrix Spike (MS) and the Matrix Spike Duplicate (MSD) are prepared by adding 1.0 mL of 100 ppb mercury solution to 100 mL of the designated field sample.

11.8.6 The Duplicate Sample is prepared by aliquoting an additional 100 ml of the designated field sample to another 300-mL BOD bottle.

11.9 Add 5 mL of concentrated sulfuric acid and mix. Add 2.5 mL of concentrated nitric acid and mix.

11.10 Add 15 mL of the potassium permanganate solution and mix well. Add additional permanganate (as much as 25 mL) if the color does not persist for 15 minutes. If any one (or more) sample(s) require additional permanganate, that amount of permanganate must be added to the entire batch of samples being prepped, including the method blank and standards, and that addition must be noted in the preparation log.

11.11 Add 8 mL of the potassium persulfate solution. **The addition of the potassium persulfate solution will not be used for samples submitted to meet the regulatory requirements of the SC DEHC.**

11.12 Cover each BOD bottle with a watch glass and place in a water bath maintained at 95 °C for 2 hours.

11.13 Complete the Mercury Preparation Log (Attachment 2). Be sure to note the time in and out of the water bath as well as the water bath temperature.

ORIGINAL MASTER COPY CONTROLLED COPY
If words above are not highlighted, this is an uncontrolled copy of this document.

11.14 Remove BOD bottle from bath and inspect color of sample. The purple color from the permanganate should be present. If not, add more permanganate solution and digest further.

11.15 Cool to room temperature. The total effective volume of each sample is 100 mL.

11.16 Sign and date the Chain of Custody form for the digested samples (Attachment 4) relinquishing samples to the analyst performing the Cold Vapor analysis. This form must accompany samples to the analysis laboratory.

12.0 Data Analysis and Calculations

Calculations must be consistent with the Quality Control SOP 13.4, "Numerical Data Reduction".

13.0 Method Performance

This method was validated through in-house laboratory studies of method detection limits and precision and accuracy for single analyst. The data are retained by the QA department.

14.0 Pollution Prevention

The solvents used in this procedure pose little threat to the environment when recycled and managed properly. Pollution prevention encompasses any technique that reduces or eliminates the quantity or toxicity of waste at the point of generation. Numerous opportunities for pollution prevention exist in laboratory operation. The EPA has established a preferred hierarchy of environmental management techniques that places pollution prevention as the management option of first choice. Whenever feasible, laboratory personnel should use pollution prevention techniques to address their waste generation. When wastes cannot be feasibly reduced at the source, the Agency recommends recycling as the next best thing.

15.0 Waste Management

It is the laboratory's responsibility to comply with all federal, state, and local regulations governing waste management, particularly the hazardous waste identification rules and land disposal restrictions, and to protect the air, water, and land by minimizing and controlling all releases from fume hoods and bench operations. Compliance with all sewage discharge permits and regulations is also required. See SOP 12.1, "Hazardous Waste Disposal", regarding laboratory procedures for recycling solvent waste streams.

ORIGINAL MASTER COPY CONTROLLED COPY
If words above are not highlighted, this is an uncontrolled copy of this document.

Samples preserved with HCl, HNO_3, or H_2SO_4 to pH <2 are hazardous and must be handled as hazardous waste.

Refer to the Hazardous Waste Management and Safety SOPs located in the lab.

16.0 References

16.1 U.S. EPA CLP SOW ILM04.1 and ILM05.4

16.3 Methods for Chemical Analysis of Water and Waste, Method 245.1, Revision 3.0, 1994

16.4 SW-846 Method, Update III, Method 7470A, Revision 1, 9/94.

16.5 Standard Methods for the Examination of Water and Wastewater, 20th (1998) Edition, Method 1080

16.5 Code of Federal Register, 40 CFR, Part 136, "Guidelines for Establishing Test Procedures for Priority Pollutants"

16.6 Quality Control SOP 13.6, "Proper Documentation Procedures"

16.7 NELAC Standards, effective July 2003**, plus revisions**

16.8 QA/G6: Guidance for Preparing Standard Operating Procedures (SOPs) EPA/600/B-07/001, April 2007.

16.9 CompuChem Quality Manual, **Revision 13**, **November 17, 2009, plus revisions**

16.10 Sample Control SOP 4.6, "Storing Samples"

16.11 Department of Defense Quality Systems Manual for Environmental Laboratories, Version **4.1, 4/22/2009**

17.0 Attachments as Tables, Diagrams and Flowcharts

17.1 Attachment 1 - Standards/QC Preparation Log for ICP Metals/Mercury

17.2 Attachment 2 – Metals/Mercury Preparation Log

17.3 Attachment 3 - Internal Chain of Custody Form

17.4 Attachment 4 - Digestion Chain of Custody Form

ORIGINAL MASTER COPY CONTROLLED COPY
If words above are not highlighted, this is an uncontrolled copy of this document.

Attachment 1

Standards/QC Preparation Log for ICP Metals/Mercury Page 1 of 3 **Case/SDG:_____**
COMPUCHEM a division of Liberty Analytical Corp. Worksheet 1Q (1) 2

REAGENTS	REF#[1]	MANUFACTURER	LOT#	EXPIRATION DATE
SULFURIC ACID (H_2SO_4)	1m2-186-9	CALEDON	65758	08/11
NITRIC ACID (HNO_3)	1m2-186-26	JT BAKER	G41034	12/11
POTASSIUM PERMANGANATE ($KMnO_4$)	1m2-186-4	JT BAKER	G10663	07/11
HYDROCHLORIC ACID (HCL)	1m2-186-25	CALEDON	68273	12/11
POTASSIUM PERSULFATE ($K_2S_2O_8$)	1m2-184-10	CALEDON	64278	11/10
HYDROGEN PEROXIDE (H_2O_2)	1m2-186-8	CALEDON	65827	08/11
STANDARDS				
XCL 20R	1m2-186-12	HIGH PURITY	0825902	09/22/09
XCL LCS 10XR	8K21001	HIGH PURITY	0832331	11/21/09
ERA PPT (540)	1m2-186-16	ERA	540	09/30/09
EPA LCS (0405)	1m2-184-27	EPA	0405	11/25/09
ICV-1 (0307)	1m2-187-5	EPA	0307	02/16/10
ILM05.3 MATRIX SPIKE	1m2-186-7	HIGH PURITY	0821413	08/04/09
SILVER (Ag) 1000ppm	1m2-183-14	HIGH PURITY	0719407	01/27/09
TCLP 500	1m2-186-27	HIGH PURITY	0835022	12/18/09
ARSENIC (As) 1000ppm	7m1-39-21	HIGH PURITY	0731224	11/11/09
MERCURY (Hg) 20ppm	1m2-186-15	HIGH PURITY	0826123	09/19/09
ICV-5 (0508) Hg	1m2-186-22	EPA	0508	11/20/09

[1]Ref#=Logbook ID, Page number, and item number from Materials Receipt Log
[2]Standard Lot Number consist of standard ID, date prepared, and initials of preparer

STANDARD SOLUTIONS PREPARED BY:_____ DATE:_____

ENTERED BY:_____ DATE:_____

REVIEWED BY:_____ DATE:_____

The presence of the Chemist's/Analyst's employee ID number, or signature, on this worksheet attests that strict compliance with the method's SOP has occurred. Any SOP deviations require documentation by the responsible chemist/analyst together with the chemist's/analyst's initials and the initials of the lab supervisor and a QA department representative, signifying approval of the deviation.

12/03/07:RM

Attachment 1(continued)

Standards/QC Preparation Log for ICP Metals/Mercury Page 2 of 3 **Case/SDG:**_____
COMPUCHEM a division of Liberty Analytical Corp. Worksheet 1Q (1) 2

STANDARD LOT NUMBER[2]	**PREPARATION INSTRUCTIONS**
Hg 100ppb- 02-20-09 – NB	Place in a 100mL volumetric flask: 0.5mL of 20ppm Hg stock solution 2.5mL of concentrated HNO_3 Baker instra-analyzed Trace Metals grade or equivalent Dilute to 100mL volume with reagent water (**PREPARE DAILY**)
$K_2S_2O_8$- 02-06-09 - DD Potassium Persulfate	Place in a 1000mL Erlenmeyer flask: 50.0g of $K_2S_2O_8$ Baker instra-analyzed Trace Metals grade or equivalent Dilute to 1000mL with reagent water. Transfer to a re-pipettor bottle (**PREPARE AS NEEDED**)
$KmnO_4$- 02-06-09 - DD Potassium Permanganate	Place in a 2000mL volumetric flask: 100.0g of $KmnO_4$ Baker instra-analyzed Trace Metals grade or equivalent Dilute to 2000mL with reagent water (**PREARE AS NEEDED**)
HNO_3- 02-02-09 - DD Nitric Acid	Place in a 2000mL volumetric flask: 500mL of Deionized water 1000mL of concentrated HNO_3 Baker instra-analyzed Trace Metals grade or equivalent Dilute to 2000mL with reagent water (**PREPARE AS NEEDED**)
HCl- 02-02-09 - DD Hydrochloric Acid	Place in a 500mL volumetric flask: 200mL of Deionized water 250mL of concentrated HCl Baker instra-analyzed Trace Metals grade or equivalent Dilute to 500mL with reagent water (**PREPARE AS NEEDED**)

[1]Ref#=Logbook ID, Page number, and item number from Materials Receipt Log
[2]Standard Lot Number consist of standard ID, date prepared, and initials of preparer

STANDARD SOLUTIONS PREPARED BY:_____ DATE:_____

ENTERED BY:_____ DATE:_____

REVIEWED BY:_____ DATE:_____

The presence of the Chemist's/Analyst's employee ID number, or signature, on this worksheet attests that strict compliance with the method's SOP has occurred. Any SOP deviations require documentation by the responsible chemist/analyst together with the chemist's/analyst's initials and the initials of the lab supervisor and a QA department representative, signifying approval of the deviation.

12/03/07:RM

Attachment 1 (Continued)

Standards/QC Preparation Log for ICP Metals/Mercury Page 3 of 3 **Case/SDG:**_____

COMPUCHEM a division of Liberty Analytical Corp. Worksheet 1Q (1) 2

STANDARD LOT NUMBER[2]	**PREPARATION INSTRUCTIONS**	Resultant Analyte Concentration
ICV-5- 02-20-09-NB	Pipet into a 300mL BOD Bottle 1.0mL of ICV-5 and 99mL of reagent water. Digest according to sample preparation instructions	4.1µg/L
S0/ICB/CCB- 02-20-09-NB	Pipet into a 300mL BOD Bottle 100mL of reagent water Digest according to sample preparation instructions	0.0µg/L
S0.2/CRA/CRI- 02-20-09-NB	Pipet into a 300mL BOD Bottle 0.2mL of Hg 100ppb and 99.8mL of reagent water Digest according to sample preparation instructions	0.2µg/L
S0.5- 02-20-09-NB	Pipet into a 300mL BOD Bottle 0.5mL of Hg 100ppb and 99.5mL of reagent water Digest according to sample preparation instructions	0.5µg/L
S1.0- 02-20-09-NB	Pipet into a 300mL BOD Bottle 1.0mL of Hg 100ppb and 99mL of reagent water Digest according to sample preparation instructions	1.0µg/L
S5.0/CCV- 02-20-09-NB	Pipet into a 300mL BOD Bottle 5.0mL of Hg 100ppb and 95mL of reagent water Digest according to sample preparation instructions	5.0µg/L
S10.0- 02-20-09-NB	Pipet into a 300mL BOD Bottle 10mL of Hg 100ppb and 90mL of reagent water Digest according to sample preparation instructions	10.0µg/L

[1]Ref#=Logbook ID, Page number, and item number from Materials Receipt Log
[2]Standard Lot Number consist of standard ID, date prepared, and initials of preparer

STANDARD SOLUTIONS PREPARED BY:_____ DATE:_____

ENTERED BY:_____ DATE:_____

REVIEWED BY:_____ DATE:_____

The presence of the Chemist's/Analyst's employee ID number, or signature, on this worksheet attests that strict compliance with the method's SOP has occurred. Any SOP deviations require documentation by the responsible chemist/analyst together with the chemist's/analyst's initials and the initials of the lab supervisor and a QA department representative, signifying approval of the deviation.

12/03/07:RM

Attachment 2

CompuChem, a Division of Liberty Analytical Corp.

METALS/MERCURY PREPARATION LOG

Metals Method: ILM05.4 / HW1 — *Green Water* — Date Prepped: _____

Mercury Method: ILM05.4 / CW1 — *or Red* — Batch No.: _____

Case/SDG: _____ Prepared By: _____

COMPUCHEM NUMBER	CLIENT SAMPLE ID	SAMPLE TYPE	ICP Initial (mL)	ICP Final (mL)	Hg Initial (mL)	Hg Final (mL)	*Description Before	*Description After (ICP)	pH
							N/A	/	N/A
							/	/	N/A
							/	/	
							/	/	
							/	/	
							/	/	
							/	/	
							/	/	
							/	/	
							/	/	
							/	/	
							/	/	
							/	/	
							/	/	
							/	/	
							/	/	
							/	/	
							/	/	
							/	/	
							/	/	
							/	/	
							/	/	
							/	/	
							/	/	
							/	/	
							/	/	
							/	/	
							/	/	

Mercury Standards and QC
S0 S0.2 S0.5 S1 S5 S10
ICV ICB CRI CCV CCB

Hot Block Temp In:	
Hot Block Temp Out:	

Time Hg in water bath:	
Time Hg out water bath:	
Water Bath Temp In:	
Water Bath Temp Out:	

Reviewed by: _____

Date: _____

Sample Spike(SS) Ref:
ICP: 0.5mL ILM05.3 MATRIX SPIKE
Ref #:
HG: 1.0mL 100ppb Hg
Ref#
LCS Ref:
ICP: 6.0mL ICV-1 (1201)
Ref #:

NOTE: All standards and QC for mercury were prepared at the same day as the associated samples. Refer to the attached Standard/QC Preparation Log, with date matching the above preparation date, for preparation method and instruction.

* R=red, BL=blue, Y=yellow, G=green, O=orange, V=violet, W=white, CS=colorless, BR=brown, BK=black, GY=grey

F=fine M=medium C=coarse CL=clear, CY=cloudy, OP=opaque

"The presence of the Chemist/analyst's employee ID number, or signature, on this log attests that strict compliance with the method's SOP has occurred. Any SOP deviations require documentation by the responsible chemist/analyst together with the chemist's/analyst's initials and the initials of the lab supervisor and a QA department representative, signifying approval of the deviation."

Shading has been applied to unused portions of this worksheet as a substitute for 'Z-out'.

03/19/07: JBB

Attachment 3

Internal Chain of Custody

CompuChem a division of Liberty Analytical Corp. *RAW SAMPLE*

Laboratory:_____ Requested By:_____

Water_____ Soil_____ P.E._____ Date:_____

EPA_____ Commercial_____ Shift: 1 2 3

This form generated on: 4/10/2006

	CCN	Receipt Date	Preservation	Analysis Parameter	Bottle Number (receiving use only)	
1						
2						
3						
4						
5						
6						
7						
8						
9						
10						
11						
12						
13						
14						
15						
16						
17						
18						
19						
20						

Relinquished By:_____ Received By:_____ Date:_____ Time:_____

Relinquished By:_____ Received By:_____ Date:_____ Time:_____

Relinquished By:_____ Received By:_____ Date:_____ Time:_____

Attachment 4

Internal COC Mercury Digestions

INTERNAL DIGESTION COC

9051328

COMPUCHEM

Printed: 5/13/2009 3:24:02PM

Matrix: Soil **Prepared using: METALS - CS1**

Lab Number	Client ID	Sample Type	

Relinquished By	Date	Received By	Date
Relinquished By	Date	Received By	Date
Relinquished By	Date	Received By	Date
Relinquished By	Date	Received By	Date

Page 1 of 1

CompuChem
A Division of
Liberty Analytical Corp.

501 Madison Avenue
Cary, NC 27513

NELAP accredited

SOP DOCUMENTATION FORM

This form must accompany all new and revised Standard Operating Procedures (SOPs) when you turn them in to Quality Assurance for review. Please fill out the entire block below (except effective date).

This is a new procedure _____ revised procedure ✓ outdated procedure (archive) _____

- Procedure Code: SPP-162 SOP Section #: 3.3.2 Revision #: 17

SOP Title: Solid Sample Mercury Digestion by SW-846 Methods 7471A and 7471B

Effective date: (QA fills in) 10-02-09

- Procedure prepared by: Bob McCann Date: 9/2/09
- Procedure approved by: (If the manager prepared the SOP, a qualified second party should sign) Date: 090207
- Reason for change: Include requirements for Method 7471B and changes from review
- This procedure meets the requirements of the following approved method references: SW-846, 3rd Edition, Update III, method 7471A, Revision 1, ~~1994~~ and Update IV, Method 7471B, Revision 2, February 2007 1994 ~~BM~~ 9-2-09

Procedure approved by a QA Representative (unless QA Representative signed above):

_____ Date: _____

On an annual basis: Lab managers are required to review lab practices and revise the SOP if necessary. If no revision is necessary, indicate by your signature that the SOP has been reviewed.

Annual Review—Signature: Norma S. Burton Date: 9/2/09

Annual Review—Signature: Dwight D. Dickens Date: 9-2-09

Annual Review—Signature: John R. Reacher Date: 9-2-09

Annual Review—Signature: _____ Date: _____

Sample Preparation Procedure -162: Solid Sample Mercury Digestion by SW-846 Methods 7471A **and 7471B**

Table of Contents

SECTION	PAGE NO.
Section 1.0 – Scope and Application	2
Section 2.0 – Summary of Method	2
Section 3.0 – Definitions	**3-4**
Section 4.0 – Interferences	**4**
Section 5.0 – Safety	**4**
Section 6.0 – Equipment and Supplies	**4-5**
Section 7.0 – Reagents and Standards	**5-7**
Section 8.0 - Sample Preservation and Storage	**7**
Section 9.0 – Quality Control	**7-8**
Section 10.0 – Calibration and Standardization	**8**
Section 11.0 – Procedure	**9-11**
Section 12.0 – Data Analysis and Calculations	**11**
Section 13.0 – Method Performance	**12**
Section 14.0 – Pollution Prevention	**12**
Section 15.0 – Waste Management	**12**
Section 16.0 – References	**12-13**
Section 17.0 – Attachments as Tables, Diagrams, and Flowcharts	**13**
Attachment 1	**14-16**
Attachment 2	**17**
Attachment 3	**18**
Attachment 4	**19**

ORIGINAL MASTER COPY CONTROLLED COPY
If words above are not highlighted, this is an uncontrolled copy of this document.

Sample Preparation Procedure -162: Solid Sample Mercury Digestion by SW-846 Methods 7471A **and 7471B**

1.0 Scope and Application

This Standard Operating Procedure (SOP) describes the preparation of soils, sediments, bottom deposits, biota and sludge for the determination of total mercury by Cold Vapor. All samples must be exposed to a dissolution step prior to analysis. If this dissolution procedure is not sufficient to dissolve a specific matrix type or sample, then this method is not applicable for that matrix.

The concentration range of the method is 0.03 – 1.7 mg/Kg. This range may be extended above or below the normal range by increasing or decreasing sample size or through instrument and recorder adjustments.

Staff members performing the procedures described in this SOP are responsible for reading, understanding, and complying with the SOP requirements. Supervisors are responsible for directing the analyst to the controlled SOP, and providing adequate explanation of the material contained therein.

This procedure is restricted to use by or under the supervision of analysts experienced in the instrumentation or preparative methods and who have demonstrated the ability to generate acceptable results through QC samples and analyst capability studies.

2.0 Summary of Method

2.1 **A 0.6 gram aliquot of solid sample is digested with aqua regia, mixed with potassium permanganate solution, and heated at 95º C for 30 minutes. The resulting sample is cooled and hydroxylamine hydrochloride is added, at the instrument, to reduce the excess permanganate. The sample volume at the end of the sample prep is not adjusted. The final volume is an effective volume. All samples and standards are digested using the same total volumes of reagents.**

2.2 Aqueous standards used for the calibration curve are also digested with the samples according to the water Sample Preparation Procedure –074, “Mercury in Water, Manual Digestion Procedure”.

3.0 Definitions

3.1 Method detection limit (MDL) – The minimum concentration of an analyte that can be measured and reported with 99% confidence that the analyte concentration is greater than zero and is determined from analysis of a sample in a given matrix containing the analyte (40 CFR, Part 136, Appendix B.) **The test concentration used to determine the MDL must be greater than the calculated MDL and less than ten times the calculated MDL. The test concentration must not exceed the Reporting Limit (RL) (See Section 3.2). The calculated MDL must be less than the Reporting Limit. Method detection limits are subject to change.**

3.2 Reporting Limit – The laboratory reporting limit is based on the lowest multipoint calibration standard concentration. The RL is subject to change, but must remain at or above the lowest point in the calibration. Any elevation of the reporting limit must be discussed with the project manager to ensure compliance with client requirements. For samples analyzed under DoD-QSM, the Reporting Limit must be greater than or equal to three times the MDL.

3.3 Reporting Units – mg/Kg

3.4 A Sample Delivery Group (SDG) is defined by the following, whichever is more frequent:

- each 20 field samples received within a case, or
- each 7 calendar day period during which field samples in a case are received (14 calendar days if requested by the client) beginning with the receipt of the first sample.

NOTE: The DOD-QSM and SC DHEC do not accept the SDG approach, unless the samples are prepared in a single batch. When a group of up to 20 field samples of a similar matrix are prepared as one batch, method-specified QC samples such as a method blank, laboratory control sample, matrix spike, matrix spike duplicate, and matrix duplicate must also be prepared together. If samples are batched together from different sites, project-specific QC must be processed.

3.5 **Digestion Batch – a group of up to 20 field samples of a similar matrix, method-specified QC samples such as a method blank, laboratory control sample, matrix spike, matrix spike duplicate, and matrix duplicate prepared together at the same time.**

3.6 DOD-QSM – Department of Defense-Quality Systems Manual

3.7 SC DHEC – South Carolina Department of Health and Environmental Control

Note: For samples submitted to meet the regulatory requirements of the SC DHEC, analyses have to be performed using Method 7471B.

4.0 Interferences

4.1 Potassium permanganate is added to eliminate possible interference from sulfide.

4.2 Samples with high concentration of chloride require additional permanganate to insure that free chlorine is absent during the oxidation step. Free chlorine absorbs radiation of 253 nm. An excess of hydroxylamine hydrochloride reagent is added to take up free chlorine. This is added prior to instrument analysis by the analyst.

5.0 Safety

5.1 A face shield must be worn when pouring concentrated acids. Always add acid to water when preparing aqueous acid solutions. Perform all concentrated acid additions and digestions in a fume hood.

5.2 Appropriate protective equipment and clothing must be used under the assumption that all samples are potentially hazardous. Safety glasses, gloves and lab coats are a minimum requirement. The persistent presence of noxious odors may be indicative of failure of the laboratory ventilation system and must be reported to a supervisor or manager.

5.3 Laboratory staff must review the Chemical Hygiene Plan for general safety policies, and Material Safety Data Sheets (MSDS) for reagents used in the laboratory. The Chemical Hygiene Plan and MSDS are located in the quality assurance department.

6.0 Equipment and Supplies

6.1 BOD bottles, 300-mL

6.2 Watch glasses

6.3 Volumetric flasks, 100-mL and 1-L

6.4 Commercially available turkey roaster (hot plate equivalent) – Adjustable and capable of maintaining a temperature of 90 - 95° C.

6.5 Analytical balance capable of accurately weighing to the nearest 0.01g.

6.6 Blender for homogenizing biota samples.

7.0 Reagents and Standards

Note: All purchased chemicals and reagents that do not arrive with an expiration date, must be assigned an expiration date three years from receipt. All lab prepared reagents must be assigned an expiration date one year from preparation. All standards and reagents are subject to change in vendor and in concentration.

Record all reagent and standard preparations in the Standards/QC Preparation Log (Attachment 1.) Follow instructions for appropriate standard lot number assignment.

7.1 Reagent Water - All water used during preparation should be reagent-grade Type I with regard to resistivity of > 10 megohm-cm (20th Edition of Standard Methods, Method 1080), and referred throughout this SOP as reagent water.

7.2 **Aqua Regia – Prepare just prior to use by carefully adding three volumes of concentrated hydrochloric acid (trace metal grade) to one volume of concentrated nitric acid (trace metal grade).**

7.**3** Potassium permanganate ($KMnO_4$), J.T. Baker, mercury-free, 5% solution (w/v) or equivalent

7.**3**.1 Dissolve 100 g of potassium permanganate in 2000-mL of reagent water.

7.**4** Dry ice for the homogenization of biota. Biota samples do not apply to Ohio VAP work.

7.**5** Mercury stock solution

7.8.1 High-Purity Standards, custom standard at a concentration of 20-µg/mL of mercury. The expiration date is provided by the manufacturer.

7.**6** Mercury Intermediate Standard (100 ppb)

7.9.1 Prepare the mercury intermediate standard daily by adding 0.5-mL of the mercury stock solution and 2.5-mL of concentrated HNO_3 to a 100-mL volumetric flask. Dilute to volume with reagent water. Also use this solution to spike the matrix spike and matrix spike duplicate (MS/MSD).

7.**7** Calibration Standards

7.**7**.1 Prepare the calibration standards daily using the mercury intermediate standard.

7.**7**.2 Prepare each standard by adding the following intermediate standard volumes for a total solution volume of 10-mL to separate BOD bottles. Measure the intermediate standard volume using an automated pipette.

7.**7**.2.1 0 ppb – blank consisting of 10-mL of reagent water; Also Used for the initial and continuing calibration blanks (ICB and CCB).

7.**7**.2.2 0.2 ppb – 200-µL of 100 ppb standard; Also used for the reporting limit standard.

7.**7**.2.3 0.5 ppb – 500-µL 100 ppb standard

7.**7**.2.4 1.0 ppb - 1.0-mL of 100 ppb standard

7.**7**.2.5 5.0 ppb - 5.0-mL of 100 ppb standard; Also used for the continuing calibration verification (CCV).

7.7.2.6 10.0 ppb - 10.0-mL of 100 ppb standard

Note: Due to the fact that additional reagent water is added during the digestion process and at the instrument, the total effective volume of each undigested standard would be 100 mL.

7.**7**.**3** Initial Calibration Verification (ICV) Standard (EPA ICV-5)

7.**7**.**3**.1 The ICV stock standard is **obtained** from the EPA and is used to verify the initial calibration curve.

7.**7.3**.2 Prepare an ICV standard for each day. Prepare the ICV standard by adding 1.0-mL of ICV-5 standard solution **plus 9**-mL of reagent water **to-** a BOD bottle.

7.7.3.3 The concentration varies depending on the lot number.

7.**8** ERA PPT Soil, purchased, certified LCS soil standard.

7.**8**.1 This standard is used as the Laboratory Control Sample (LCS).

7.8.2 The concentration varies, depending on the lot number.

8.0 Sample Preservation and Storage

8.1 Samples are preserved and stored according to the tables in Sample Control SOP 4.1, "Receiving Samples" and 4.6, "Storing Samples." Sample holding times are also listed.

8.2 Solid samples are stored at 4°C ± 2°C in order to meet the regulatory requirement of the NC DENR.

8.3 Samples must be digested and analyzed within 28 days of collection.

8.4 After preparation, the raw sample is returned to the sample custodian for long-term storage and disposal. After analysis residual digestate is disposed of the in the acid waste stream.

9.0 Quality Control (**QC**)

Acceptance criteria and corrective action for QC samples are detailed in the instrument procedure SOP, IP 005, "Automated Cold Vapor Determination for Mercury by SW-846 7470A and 7471A/7471B.

9.1 Method Blank

9.1.1 Prepare one method blank per batch of up to 20 samples to monitor contamination.

9.2 **Laboratory Control Sample (LCS)**

9.2.1 Prepare one LCS for each batch of up to 20 samples. The LCS is used to assess performance of the analytical system including all preparation and analysis.

9.3 **Matrix Spike/Matrix Spike Duplicate (MS/MSD)**

9.3.1 Prepare a MS/MSD pair for each **digestion** batch of up to 20 samples. The duplicate matrix spikes indicate the effect of the matrix on the accuracy and precision of the analytical procedure.

9.4 Sample Duplicate

9.4.1 Prepare one duplicate sample for each digestion batch of up to 20 samples.

9.**5** Contingency

9.**5**.1 If due to a lab accident or to QC failure a re-preparation is required for the sample and insufficient volume remains, the Project Manager must be alerted and will contact the client for direction on how to proceed.

9.**5**.2 If persistent contamination occurs in the laboratory, analyses must be halted until the source can be identified and isolated. When the contamination issue is resolved, sample analyses may proceed.

9.**5**.3 Any other issues that potentially affect data quality should be addressed with the Project Manager.

10.0 Calibration and Standardization

10.1 Ensure the balance is calibrated for the day before weighing samples or reagents. If not, calibrate the balance following the procedure in Quality Control SOP 13.16, "Top Loading Balance Calibration and Maintenance."

10.2 Ensure that the automated pipette has been calibrated within the month. If not, calibrate the pipette using the procedure in SOP SOP 9.1, "Calibrating Automatic Pipettes in the Inorganic Laboratory".

11.0 Procedure

11.1 Documentation must follow the requirements in Quality Control SOP 13.6, "Proper Documentation Procedures".

11.2 Be careful not to contaminate samples in the laboratory. Samples should not be exposed to any condition that could result in mercury contamination.

11.3 Glassware to be used for mercury sample preparation should be prepared following Glassware Preparation SOP 10.2, "Preparing Glassware for the Inorganics Laboratory."

11.4 Inspects all glassware before use. Do not use any glassware with visible residues, dust, or discoloration in this preparation procedure.

11.5 Immediately prior to use, rinse glassware with 1:1 nitric acid, followed by reagent water.

CAUTION: Do not touch the inside walls of any glassware, even with gloves on. Allow the glassware to drain thoroughly. Do not attempt to wipe out or dry the glassware.

11.6 Turn on the turkey roaster. Fill it approximately one quarter full with water. Set the temperature for the maintenance of 95° C ± 5°C sample temperature. Monitor the temperature of sample digestion using a calibrated alcohol thermometer.

11.6.1 Insert the thermometer through the top of the turkey roaster. Ensure that the thermometer is submerged in the water but is not in contact with the turkey roaster. Record the temperature on the Metals/Mercury Preparation Log (Attachment 3).

11.7 Request samples scheduled to be prepared that day from the sample custodian using a completed internal chain-of-custody (COC) form (Attachment 2). The form accompanies the samples when they are delivered to the preparation work area and remains with the samples at all times. Sign and date the COC upon receipt of the samples and when samples are retuned to the custodian.

11.8 Sample Preparation

11.8.1 Allow field samples to equilibrate to room temperature. Discard any foreign objects such as sticks, stones/rocks, and leaves from the sample container. Mix the sample, using a clean spatula, inside the sample container breaking any clumps. If necessary, sieve the sample using USS #10 sieve.

11.8.2 **Prepare the method blank using 0.6 grams of a <u>clean</u> solid matrix, when available, or an empty digestion cup to which the sample volumes of all reagents are added as the other samples in the batch.**

11.8.3 Prepare the LCS by weighing 0.2 g of LCS reference material into a BOD bottle.

11.8.4 Prepare field samples by weighing 0.6 – 0.69 grams of sample into a BOD bottle. .

11.8.5 Prepare the MS/MSD by weighing 0.6 – 0.69 grams of the designated sample onto separate BOD bottles. Add 1.0-mL of the 100 ppb mercury intermediate standard from section 7.

11.8.6 Record the sample weights to the nearest 0.01g on the Metals/Mercury Preparation Log (Attachment 3).

11.8.7 Add enough reagent water to each BOD bottle for total a volume of **5**-mL.

11.9 Biota Sample Preparation

11.9.1 If the same biota samples are being prepared for other analyses that require homogenizing, <u>an aliquot of the sample must be taken after homogenizing (but before drying)</u>.

11.9.2 Weigh and record the entire sample. Freeze the sample at –10° C for 2 hours prior to homogenization. Pack the blender below the blades with dry ice. Cut the frozen sample into small pieces and place in the blender. Cover with dry ice and let sit for one minute to refreeze.

11.9.3 Blend the sample. Pour the sample into a sample container and place the container in the freezer at –10° C. Leave the lid loose so the dry ice can sublimate overnight. The sample will then be ready for extraction.

Note: Do not air dry. Add sodium sulfate, if necessary, to dry.

Note: Biota samples do not pertain to Ohio Voluntary Action Program (VAP).

11.10 Sample Digestion

11.10.1 Carefully add 5-mL of **Aqua Regia** to each sample and calibration standard in the BOD bottles.

11.10.2 After the water bath in the turkey roaster has reached 95° C, heat the **digestion vessels** for two minutes.

11.10.3 **Remove the samples/standards from the water bath and allow them** to cool. Add 50-mL of reagent water and 15-mL of potassium permanganate to each sample. Mix thoroughly by swirling each BOD bottle **and let stand for 15 minutes.**

11.10.4 Place the **digestion vessels** back into in the 95° C water bath for 30 minutes.

Note: The countdown for the 30 minute digestion period does not start until the temperature of the water bath has reached 95° C after placement of samples.

11.11 Remove the samples**/standards** from the water bath and allow them to cool. Observe their color. The samples should remain a dark purple color from the excess potassium permanganate present in the solution. If the color has faded in any of the samples, add more potassium permanganate solution to all of the samples including the calibration standards. Note the volume added on the preparation log. Repeat step 11.10.4.

11.12 Complete the Metals Mercury Preparation Log (Attachment 3). Be sure to note the time in and out of the water bath as well as the water bath temperature.

11.13 Sign and date the COC form for the digested samples (Attachment 4) relinquishing samples to the analyst performing the Cold Vapor analysis. This form must accompany samples to the analysis laboratory.

12.0 Data Analysis and Calculations

Calculations must be consistent with the Quality Control SOP 13.6 “Numerical Data Reduction”.

13.0 Method Performance

This method was validated through in-house laboratory studies of method detection limits and precision and accuracy for a single analyst. The data are retained by the QA department.

14.0 Pollution Prevention

The solvents used in this procedure pose little threat to the environment when recycled and managed properly. Pollution prevention encompasses any technique that reduces or eliminates the quantity or toxicity of waste at the point of generation. Numerous opportunities for pollution prevention exist in laboratory operation. The EPA has established a preferred hierarchy of environmental management techniques that places pollution prevention as the management option of first choice. Whenever feasible, laboratory personnel should use pollution prevention techniques to address their waste generation. When wastes cannot be feasibly reduced at the source, the Agency recommends recycling as the next best thing. See SOP 12.1, "Hazardous Waste Disposal", regarding laboratory procedures for recycling solvent waste streams.

15.0 Waste Management

It is the laboratory's responsibility to comply with all federal, state, and local regulations governing waste management, particularly the hazardous waste identification rules and land disposal restrictions, and to protect the air, water, and land by minimizing and controlling all releases from fume hoods and bench operations. Compliance with all sewage discharge permits and regulations is also required.

Samples preserved with HCl, HNO_3, or H_2SO_4 to pH <2 are hazardous and must be handled as hazardous waste.

Refer to the Hazardous Waste Management and Safety SOPs located in the lab.

16.0 References

16.1 "Test Methods for Evaluating Solid Waste, Physical/Chemical Methods," SW-846, 3rd edition, Update III, Method 7471A, Revision 1, 9/94 **and Update IV, Method 7471B, Revision 2, February 2007**

16.2 Quality Control SOP 13.6 "Proper Documentation Procedures"

16.3 Quality Control SOP13.4 "Numerical Data Reduction"

16.4 NELAC Standards, **effective** 2003

16.5 QA/G6: Guidance for the Preparing Standard Operating Procedures (SOPs) EPA/600/B-07/001, April 2007.

16.6 CompuChem Quality Manual, Revision **12, August 3, 2009**

16.7 Glassware Preparation SOP, "Preparing Glassware for the Inorganics Laboratory."

17.0 Attachments as Tables, Diagrams, Flowcharts & Validation Data

17.1 Attachment 1 – Standards/QC Preparation Log for Cold Vapor Mercury

17.2 Attachment 2 – Internal Chain of Custody (Raw Sample)

17.3 Attachment 3 – Metals/Mercury Preparation Log

17.4 Attachment 4 – Internal Chain of Custody (Mercury Digestates)

Attachment 1

Standards/QC Preparation Log for ICP Metals/Mercury Page 1 of 3 **Case/SDG:**_____

COMPUCHEM a division of Liberty Analytical Corp. Worksheet 1Q (1) 2

REAGENTS	REF#[1]	MANUFACTURER	LOT#	EXPIRATION DATE
SULFURIC ACID (H_2SO_4)	1m2-187-13	CALEDON	67048	03/12
NITRIC ACID (HNO_3)	1m2-187-12	JT BAKER	H02026	03/12
POTASSIUM PERMANGANATE ($KMnO_4$)	1m2-186-4	JT BAKER	G10663	07/11
HYDROCHLORIC ACID (HCL)	1m2-187-17	CALEDON	68763	04/12
POTASSIUM PERSULFATE ($K_2S_2O_8$)	1m2-184-10	CALEDON	64278	11/10
HYDROGEN PEROXIDE (H_2O_2)	1m2-186-8	CALEDON	65827	08/11
STANDARDS				
XCL 20R	1m2-186-12	HIGH PURITY	0825902	09/22/09
XCL LCS 10XR	8K21001	HIGH PURITY	0832331	11/21/09
ERA PPT (540)	1m2-187-4	ERA	540	03/03/10
EPA LCS (0405)	1m2-184-27	EPA	0405	11/25/09
ICV-1 (0307)	1m2-187-5	EPA	0307	02/16/10
ILM05.3 MATRIX SPIKE	1m2-186-7	HIGH PURITY	0821413	08/04/09
SILVER (Ag) 100ppm	7m1-42-6	HIGH PURITY	0815526	12/15/09
TCLP 500	1m2-186-27	HIGH PURITY	0835022	12/18/09
ARSENIC (As) 1000ppm	7m1-39-21	HIGH PURITY	0731224	11/11/09
MERCURY (Hg) 20ppm	1m2-186-15	HIGH PURITY	0826123	09/19/09
ICV-5 (0508) Hg	1m2-186-22	EPA	0508	11/20/09

[1]Ref#=Logbook ID, Page number, and item number from Materials Receipt Log
[2]Standard Lot Number consist of standard ID, date prepared, and initials of preparer

STANDARD SOLUTIONS PREPARED BY:_____ DATE:_____

ENTERED BY:_____ DATE:_____

REVIEWED BY:_____ DATE:_____

The presence of the Chemist's/Analyst's employee ID number, or signature, on this worksheet attests that strict compliance with the method's SOP has occurred. Any SOP deviations require documentation by the responsible chemist/analyst together with the chemist's/analyst's initials and the initials of the lab supervisor and a QA department representative, signifying approval of the deviation.

12/03/07:RM

ORIGINAL MASTER COPY CONTROLLED COPY
If words above are not highlighted, this is an uncontrolled copy of this document.

Attachment 1 (Continued)

Standards/QC Preparation Log for ICP Metals/Mercury Page 2 of 3 **Case/SDG:**_____

COMPUCHEM a division of Liberty Analytical Corp. Worksheet 1Q (1) 2

STANDARD LOT NUMBER[2]	**PREPARATION INSTRUCTIONS**
Hg 100ppb- 05-11-09 – DD	Place in a 100mL volumetric flask: 0.5mL of 20ppm Hg stock solution 2.5mL of concentrated HNO_3 Baker instra-analyzed Trace Metals grade or equivalent Dilute to 100mL volume with reagent water (**PREPARE DAILY**)
$K_2S_2O_8$- 05-08-09 - DD Potassium Persulfate	Place in a 1000mL Erlenmeyer flask: 50.0g of $K_2S_2O_8$ Baker instra-analyzed Trace Metals grade or equivalent Dilute to 1000mL with reagent water. Transfer to a re-pipettor bottle (**PREPARE AS NEEDED**)
$KmnO_4$- 05-08-09 - NB Potassium Permanganate	Place in a 2000mL volumetric flask: 100.0g of $KmnO_4$ Baker instra-analyzed Trace Metals grade or equivalent Dilute to 2000mL with reagent water (**PREARE AS NEEDED**)
HNO_3- 05-08-09 - DD Nitric Acid	Place in a 2000mL volumetric flask: 500mL of Deionized water 1000mL of concentrated HNO_3 Baker instra-analyzed Trace Metals grade or equivalent Dilute to 2000mL with reagent water (**PREPARE AS NEEDED**)
HCl- 05-08 -09 - DD Hydrochloric Acid	Place in a 500mL volumetric flask: 200mL of Deionized water 250mL of concentrated HCl Baker instra-analyzed Trace Metals grade or equivalent Dilute to 500mL with reagent water (**PREPARE AS NEEDED**)

[1]Ref#=Logbook ID, Page number, and item number from Materials Receipt Log
[2]Standard Lot Number consist of standard ID, date prepared, and initials of preparer

STANDARD SOLUTIONS PREPARED BY:_____ DATE:_____

ENTERED BY:_____ DATE:_____

REVIEWED BY:_____ DATE:_____

The presence of the Chemist's/Analyst's employee ID number, or signature, on this worksheet attests that strict compliance with the method's SOP has occurred. Any SOP deviations require documentation by the responsible chemist/analyst together with the chemist's/analyst's initials and the initials of the lab supervisor and a QA department representative signifying approval of the deviation.

12/03/07:RM

ORIGINAL MASTER COPY CONTROLLED COPY
If words above are not highlighted, this is an uncontrolled copy of this document.

Attachment 1 (Continued)

Standards/QC Preparation Log for ICP Metals/Mercury Page 3 of 3 **Case/SDG:**_____

COMPUCHEM a division of Liberty Analytical Corp. Worksheet 1Q (1) 2

STANDARD LOT NUMBER[2]	**PREPARATION INSTRUCTIONS**	Resultant Analyte Concentration
ICV-5- 05-11-09-DD	Pipet into a 300mL BOD Bottle 1.0mL of ICV-5 and 99mL of reagent water. Digest according to sample preparation instructions	4.0µg/L
S0/ICB/CCB- 05-11-09-DD	Pipet into a 300mL BOD Bottle 100mL of reagent water Digest according to sample preparation instructions	0.0µg/L
S0.2/CRA/CRI- 05-11-09-DD	Pipet into a 300mL BOD Bottle 0.2mL of Hg 100ppb and 99.8mL of reagent water Digest according to sample preparation instructions	0.2µg/L
S0.5- 05-11-09-DD	Pipet into a 300mL BOD Bottle 0.5mL of Hg 100ppb and 99.5mL of reagent water Digest according to sample preparation instructions	0.5µg/L
S1.0- 05-11-09-DD	Pipet into a 300mL BOD Bottle 1.0mL of Hg 100ppb and 99mL of reagent water Digest according to sample preparation instructions	1.0µg/L
S5.0/CCV- 05-11-09-DD	Pipet into a 300mL BOD Bottle 5.0mL of Hg 100ppb and 95mL of reagent water Digest according to sample preparation instructions	5.0µg/L
S10.0- 05-11-09-DD	Pipet into a 300mL BOD Bottle 10mL of Hg 100ppb and 90mL of reagent water Digest according to sample preparation instructions	10.0µg/L

[1]Ref#=Logbook ID, Page number, and item number from Materials Receipt Log
[2]Standard Lot Number consist of standard ID, date prepared, and initials of preparer

STANDARD SOLUTIONS PREPARED BY:_____ DATE:_____

ENTERED BY:_____ DATE:_____

REVIEWED BY:_____ DATE:_____

The presence of the Chemist's/Analyst's employee ID number, or signature, on this worksheet attests that strict compliance with the method's SOP has occurred. Any SOP deviations require documentation by the responsible chemist/analyst together with the chemist's/analyst's initials and the initials of the lab supervisor and a QA department representative, signifying approval of the deviation.

12/03/07:RM

ORIGINAL MASTER COPY CONTROLLED COPY
If words above are not highlighted, this is an uncontrolled copy of this document.

Attachment 2

Internal Chain of Custody

CompuChem a division of Liberty Analytical Corp. *RAW SAMPLE*

Laboratory:_____ Requested By:_____

Water_____ Soil_____ P.E._____ Date:_____

EPA_____ Commercial_____ Shift: 1 2 3

This form generated on: 4/10/2006

	CCN	Receipt Date	Preservation	Analysis Parameter	Bottle Number (receiving use only)	
1						
2						
3						
4						
5						
6						
7						
8						
9						
10						
11						
12						
13						
14						
15						
16						
17						
18						
19						
20						

Relinquished By:_____ Received By:_____ Date:_____ Time:_____

Relinquished By:_____ Received By:_____ Date:_____ Time:_____

Relinquished By:_____ Received By:_____ Date:_____ Time:_____

Attachment 3

CompuChem, a Division of Liberty Analytical Corp.

METALS/MERCURY PREPARATION LOG

Blue Soil

Metals Method: 3050B / 6010B

Mercury Method: 7471A

Prepared by:

Date Prepped:

Batch No.:

COMPUCHEM NUMBER	CLIENT SAMPLE ID	SAMPLE TYPE	ICP Initial g	ICP Final (mL)	HG Initial g	HG Final (mL)	*Description Before	*Description After ICP	
							/	/	
							/	/	
							/	/	
							/	/	
							/	/	
							/	/	
							/	/	
							/	/	
							/	/	
							/	/	
							/	/	
							/	/	
							/	/	
							/	/	
							/	/	
							/	/	
							/	/	
							/	/	
							/	/	
							/	/	
							/	/	
							/	/	
							/	/	
							/	/	
							/	/	
							/	/	
							/	/	
							/	/	
							/	/	
							/	/	
							/	/	
							/	/	

Mercury Standards and QC

S0 S0.2 S0.5 S1 S5 S10

ICV ICB CRI CCV CCB

Hot Block Temp In:

Hot Block Temp Out:

Time Hg in water bath:	
Time Hg out water bath:	
Water Bath Temp In:	
Water Bath Temp Out:	

Reviewed by:

Date:

Sample Spike(SS) Ref:

ICAP: 1.0mL XCL-20

Ref#:

HG: 1.0mL 100ppb Hg

Ref#

LCS Ref:

ICAP: 1.0g ERA PPT (640)

Ref#:

HG: 0.2g ERA PPT (640)

Ref#

8/7/2006TMG

NOTE: All standards and QC for mercury were prepared at the same day as the associated samples. Refer to the attached Standard/QC Preparation Log, with date matching the above preparation date, for preparation method and instruction.

* R=red, BL=blue, Y=yellow, G=green, O=orange, V=violet, W=white, CS=colorless, BR=brown, BK=black, GY=grey

F=fine M=medium C=coarse CL=clear, CY=cloudy, OP=opaque

"The presence of the Chemist/analyst's employee ID number, or signature, on this log affects that strict compliance with the method's SOP has occurred. Any SOP deviations require documentation by the responsible chemist/analyst together with the chemist/analyst's initials and the initials of the lab supervisor and a QA department representative, signifying approval of the deviation."

Shading has been applied to unused portions of this worksheet as a substitute for '//-out'.

Attachment 4

Internal COC Mercury Digestions

CompuChem, a Division of Liberty Analytical Corp.

DIGESTATE COC

DEPT: INORGANICS

BATCH: _____

	COMPUCHEM NUMBER	CLIENT SAMPLE ID	PARAMETER	
1			HG	
2			HG	
3			HG	
4			HG	
5			HG	
6			HG	
7			HG	
8			HG	
9			HG	
10			HG	
11			HG	
12			HG	
13			HG	
14			HG	
15			HG	
16			HG	
17			HG	
18			HG	
19			HG	
20			HG	
21			HG	
22			HG	
23			HG	
24			HG	
25			HG	

	RELINQUISHED BY	RECEIVED BY	DATE/TIME	REASON

CompuChem
A Division Of
Liberty Analytical Corp.

501 Madison Avenue
Cary, NC 27513

NELAP accredited

SOP DOCUMENTATION FORM

This form must accompany all new and revised Standard Operating Procedures (SOPs) when you turn them in to Quality Assurance for review. Please fill out the entire block below (except effective date).

This is a new procedure _____ revised procedure ✓ outdated procedure (archive) _____

- Procedure Code: IP005 SOP Section #: 3.3.4 Revision #: 22

SOP Title: Automated Cold Vapor Determination for Mercury by CLP, SW-846, and MCAWW

Effective date: (QA fills in) 11-23-2009

- Procedure prepared by: Bob Maurer Date: October 12, 2009
- Procedure approved by: (If the manager prepared the SOP, a qualified second party should sign) 2 Date: 101309
- Reason for change: New instrumentation, incorporate Method 7471B, and minor corrections based on review
- This procedure meets the requirements of the following approved method references: USEPA CLP SOW ILM04.1 and ILM05.4; SW-846 3rd Edition, Update III and IV, Method 7470A, Methods 7471A/7471B; MCAWW, 1994, Method 245.1, Revision 3.0

Procedure approved by a QA Representative (unless QA Representative signed above):

_____ Date: _____

On an annual basis: Lab managers are required to review lab practices and revise the SOP if necessary. If no revision is necessary, indicate by your signature that the SOP has been reviewed.

Annual Review—Signature: [signature] Date: 10-30-09

Annual Review—Signature: _____ Date: _____

Annual Review—Signature: _____ Date: _____

Annual Review—Signature: _____ Date: _____

Instrument Procedure 005: Automated Cold Vapor Determination for Mercury by CLP, SW-846, **and** MCAWW

Table of Contents

SECTION	PAGE NO.
Section 1.0 – Scope and Application	2
Section 2.0 – Summary of Method	**2**
Section 3.0 – Definitions	**3-4**
Section 4.0 – Interferences	4
Section 5.0 – Safety	4
Section 6.0 – Equipment and Supplies	4
Section 7.0 – Reagents and Standards	**4-5**
Section 8.0 - Sample Preservation and Storage	**5-6**
Section 9.0 – Quality Control	**6-9**
Section 10.0 – Calibration and Standardization	**9-12**
Section 11.0 – Procedure	**12-14**
Section 12.0 – Data Analysis and Calculations	**14-17**
Section 13.0 – Method Performance	**17**
Section 14.0 – Pollution Prevention	**17-18**
Section 15.0 – Waste Management	**18**
Section 16.0 – References	**18-19**
Section 17.0 – Attachments as Tables, Diagrams and Flowcharts	**19**
Attachment 1	**20-22**
Attachment 2	**23**
Attachment 3	**24**

ORIGINAL MASTER COPY CONTROLLED COPY
If words above are not highlighted, this is an uncontrolled copy of this document.

Instrument Procedure 005: Automated Cold Vapor Determination for Mercury by CLP, SW-846, **and** MCAWW

1.0 Scope and Application

1.1 This Standard Operating Procedure (SOP) describes the determination mercury in drinking and surface waters, as well as soil and sediment samples after appropriate preparation. It may be applicable also to saline waters, waste waters, effluents, and domestic sewages, providing potential interferences are not present.

1.2 The working range is 0.20 to 10.0 µg Hg/L

1.3 Staff members performing the procedures described in this SOP are responsible for reading, understanding, and complying with the SOP requirements. Supervisors are responsible for directing the analyst to the controlled SOP, and providing adequate explanation of the material contained therein.

1.4 This procedure is restricted to use by or under the supervision of analysts experienced in the instrumentation or preparative methods and who have demonstrated the ability to generate acceptable results through QC samples and analyst capability studies.

2.0 Summary of Method

2.1 The flameless AA procedure is a physical method based on the absorption of radiation at 253.7 ηm by mercury vapor. The mercury is reduced to the elemental state and aerated from solution. The mercury vapor passes through a cell positioned in the light path of an atomic absorption spectrophotometer. Absorbance (peak height) is measured as a function of mercury concentration.

2.2 In addition to inorganic forms of mercury, organic mercurials may also be present. These organo-mercury compounds will not respond to the flameless atomic absorption technique unless they are first broken down and converted to mercuric ions. Potassium permanganate oxidizes many of these compounds, but recent studies have shown that a number of organic mercurials, including phenyl mercuric acetate and methyl mercuric chloride, are only partially oxidized by the reagent. Potassium persulfate has been found to give approximately 100% recovery when used as the oxidant for these compounds.

Therefore, a persulfate oxidation step following the addition of the permanganate was included during digestion to ensure that organo-mercury compound(s), if present, will be oxidized to the mercuric ion before measurement.

ORIGINAL MASTER COPY CONTROLLED COPY
If words above are not highlighted, this is an uncontrolled copy of this document.

3.0 Definitions

3.1 Method detection limit (MDL) – The minimum concentration of an analyte that can be measured and reported with 99% confidence that the analyte concentration is greater than zero and is determined from analysis of a sample in a given matrix containing the analyte. **The test concentration used to determine the MDL must be greater than the calculated MDL and less than ten times the calculated MDL. The test concentration must not exceed the Reporting Limit (RL) (see Section 3.2). The calculated MDL must be less than the Reporting Limit.**

3.2 Reporting Limit – The laboratory reporting limit is based on the lowest multipoint calibration standard concentration.

3.3 Reporting Units – µg/L for water and mg/Kg for soil

3.4 A Sample Delivery Group (SDG) is defined by the following, whichever is more frequent:

- each 20 field samples received within a case, or
- each 7 calendar day period during which field samples in a case are received (14 calendar days if requested by the client) beginning with the receipt of the first sample.

NOTE: The DoD-QSM and SC DHEC do not accept the SDG approach, unless the samples are prepared in a single batch. When a group of up to 20 field samples of a similar matrix are prepared as one batch, method-specified QC samples such as a method blank, laboratory control sample, matrix spike, matrix spike duplicate, and matrix duplicate must also be prepared together. If samples are batched together from different sites, project-specific QC must be processed.

3.5 SC DHEC – South Carolina Department of Health and Environmental Control

3.6 CRDL – Contract Required Detection Limit (for ILM04.1)

3.7 CRQL – Contract Required Quantitation Limit (for ILM05.4)

3.8 DOD-QSM – Department of Defense Quality Systems Manual

3.9 Digestion Batch – a group of up to 20 field samples of a similar matrix, method-specified QC samples such as a method blank, laboratory control

sample, matrix spike, matrix spike duplicate, and matrix duplicate prepared together at the same time.

4.0 Interferences

4.1 Some sea waters, waste waters, and sediment samples which are high in chlorides have shown a positive interference, probably due to the formation of free chlorine which will absorb radiation at 253 ηm.

4.2 Interference from certain volatile organic materials that will absorb at this wavelength is also possible. A preliminary run under oxidizing conditions, without stannous chloride, would determine if this type of interference is present.

5.0 Safety

5.1 Appropriate protective equipment and clothing must be used under the assumption that all samples are potentially hazardous. During sample preparation, glasses, gloves and lab coats are a minimum requirement. The persistent presence of noxious odors may be indicative of failure of the laboratory ventilation system and must be reported to a supervisor or manager.

5.2 Laboratory staff must review the Chemical Hygiene Plan for general safety policies, and Material Safety Data Sheets for reagents used in the laboratory. The Chemical Hygiene Play and the MSDS are located in the Quality Assurance department.

6.0 Equipment and Supplies

6.1 Atomic Absorption Spectrophotometer: Leeman Labs**, Inc. HYDRA AA/PS200II Automated Mercury Analysis System**

6.2 Volumetric flasks **(100-mL, 1-L, and 2-L)**

7.0 Reagents and Standards

Record all reagent and standard preparations in the Standards/QC Preparation Log for Cold Vapor Mercury (Attachment 1). **All purchased chemicals and reagents that do not arrive with an expiration date, must be assigned an expiration date three years from receipt date. All lab prepared regents must be assigned an expiration date one year from preparation date.**

7.1 Reagent water- All water used during preparation should be reagent-grade Type I with regard to resistivity of >10 megohm-cm (20th Edition of standards Methods, Method 1080), and referred throughout this SOP as reagent water.

7.2 Stannous chloride (10%) - Dissolve 100 grams into 500 mL of reagent water contained in a 1 L volumetric flask. Add 250 mL of concentrated HCl and dilute to volume with reagent water. Pour this solution into the reductant bottle and connect the reductant line from the pump. (Stannous sulfate may be substituted.)

7.3 NH_2OH-HCl (24%) - Dissolve 240 grams of hydroxylamine chloride and 240 grams sodium chloride in 2000 mL reagent water. (Sodium chloride-hydroxylamine sulfate may be used instead.)

7.4 Hydrochloric Acid (Concentrated) - J. T. Baker, "Instra-Pure"

7.4.1 Hydrochloric acid (10%) - Add 200 mL concentrated HCl to a 2 L volumetric flask containing 1 L of reagent water. Dilute to volume with reagent water.

CAUTION: Always pour acid into water.

7.5 The calibration standards are prepared by the inorganics sample preparation technician and are digested before use, following the appropriate sample preparation procedure (SPP).

8.0 Sample Preservation and Storage

8.1 Samples preserved and stored according to the tables in Sample Control SOP 4.1, "Receiving Samples" and 4.6, "Storing Samples." Sample holding times are also listed.

8.2 Aqueous samples should be preserved by acidification with nitric acid to a pH of ≤ 2 at the time of collection. **Mercury samples not preserved at the time of collection with nitric acid to a pH of < 2 are preserved in-house. Samples must be preserved with nitric acid to a pH of <2, with thorough mixing, at least 24 hours prior to analysis.** If only dissolved mercury is to be determined, the sample **is** filtered before the acid is added. For total mercury, the filtration step is omitted. Aqueous samples for all methods except ILM05.4 **must** be stored at room temperature or may be refrigerated **at 2-6 ^{o}C.**

8.3 Aqueous samples received for analysis using the ILM05.4 statement of work must be refrigerated at **2-6** ^{o}C**.**

8.4 For MCAWW, it is recommended that samples be sent to the lab as soon as possible after collection and acid preserved upon receipt. After acidification, the samples should be mixed, held for 16 hours, and then the pH verified to be ≤ 2. If the sample pH is > 2, repeat the process.

8.5 Soil samples are not preserved with acid. The soil samples are stored at **–2-6** ^{o}C until sample preparation.

9.0 Quality Control

9.1 Preparation Blank

9.1.1 For every 20 samples or for each digestion batch, whichever is more frequent, analyze a preparation blank. This blank is used to ascertain whether sample concentrations reflect contamination.

9.1.1.1 For CLP the blank must not contain mercury at a level above the CRDL/CRQL

9.1.1.2 For SW-846 the blank must not contain mercury at a level above the reporting limit (PQL).

9.1.1.3 For the DOD-QSM, the preparation blank must not contain mercury at a level above one-half the reporting limit (PQL).

9.1.1.4 For MCAWW, the blank must not contain mercury at a level ≥ 10% of the analyte concentration determined in the sample or > 2.2X the analyte MDL, whichever is greater.

9.1.2 If the blank does not meet the applicable criteria above, the entire sample batch associated with the preparation blank must be re-prepared along with a new blank.

9.2.2.1 The only circumstance under which the preparation blank can be reported with values greater than the CRDL/CRQL for CLP is when the concentration of mercury in the sample exceeds the blank concentration by a factor of 10 or more.

9.1.3 Values between **the** CRDL/CRQL and the MDL or PQL and IDL are reported with a “B” flag (“J” flag for ILM05.4).

9.2 Matrix Spike

9.2.1 A matrix spike shall be prepared with every 20 samples or each digestion, whichever is more frequent. For MCAWW, the matrix spike is prepared every 10 water samples.

9.2.1.1 A matrix spike duplicate is also prepared with every 20 samples for SW-846.

9.2.2 The spike recovery of the matrix spike should be within 70-130% for MCAWW and within 75-125% for CLP**,** and **80-120% for** SW-846. The relative percent difference (RPD) between the duplicated matrix spikes should be ± 20.

9.2.2.1 If the sample concentration is less than four times the amount spiked and the recovery of the spike is less than 75% or greater than 125%, the corresponding element is flagged with an "N" on Form I to indicate that the element did not recover the matrix spike acceptably.

9.2.3 To meet the requirements of the DoD-QSM, the matrix spike recovery should meet the LCS control limits. The RPD between the matrix spikes should be ≤ 20%.

9.2.3.1 If the DOD-QSM acceptance limits are not met for the matrix spikes, contact the client for guidance.

92.3.2 If the results are reported that are associated with failing matrix spikes, indicate the specific analytes in the original sample in the narrative. Refer to the DoD-QSM “J” flag.

9.3 Sample Duplicate

9.3.1 A duplicate sample is prepared with every 20 samples or each digestion, whichever is more frequent. A duplicate sample is not required for MCAWW.

9.3.2 If the sample and duplicate do not agree within 20% RPD, then the affected element is flagged with an "*" on Form I to indicate poor results duplication.

9.4 Laboratory Control Sample (LCS)

9.4.1 An LCS is prepared with every 20 samples or each digestion **batch**, whichever is more frequent. (An LCS is not required for CLP waters.)

9.4.2 The solid EPA LCS/ERA PPT has special control limits, which have been provided by EPA/ERA. The true value and acceptance range are subject to change without notice based upon the current lot purchased. See the certificate of analysis or the standard preparation log for the current lot in use.

9.4.3 For SW-846, in-house determined statistical limits are used. The statistical control limits are ± 20% for aqueous LCS. The solid LCS has special control limits, which have been provided by ERA. The true value is subject to change without notice based upon the current lot purchased. See the certificate of analysis or the standard preparation log for the current lot in use.

9.4.4 To meet the requirements for the DoD-QSM, the LCS must meet the recovery control limits of 80-120%.

9.4.5 To meet the requirements of the MCAWW, the LCS must meet the recovery limits of 85-115%. In calculating the recovery results for the MCAWW, the analyte concentration from the preparation blank must be subtracted form the LCS.

9.4.6 If the LCS fails acceptance criteria, re-analyze. If the LCS continues to fail and no instrument malfunctions or calibration failures are detected, the LCS and all associated samples and QC samples are re-digested.

9.5 CRQL/CRDL Check Standard (CRA/CRI)

9.5.1 Analyze the CRA (ILM04.1) and CRI (ILM05.4) at the CRDL/CRQL at the beginning of each sample analysis sequence to verify linearity near the CRDL/CRQL. The CRA/CRI is repeated as the 20th sample, 40th sample, etc.

9.5.2 The acceptance criterion is ± 50% for ILM04.1 and ± 30% for ILM05.4.

9.6 Serial Dilution

9.6.1 For SW-846, perform a serial dilution (1:5) on one sample per analytical batch (or when a new or unusual matrix is encountered) when **the** analyte concentration **is greater than** 25 times the MDL.

9.6.2 The recovery of the analyte in the diluted sample must be within ± 10% of that in the undiluted sample.

9.6.3 If the serial dilution fails, prepare and analyze a spiked portion of the sample at 2.5 times the analyte level.

9.6.4 If the recovery is not between 85-110%, **calculate the concentration of mercury in all samples in the batch by the method of standard additions. See Section 12.9.**

9.7 Contingency

9.7.1 If, due to a lab accident or to QC failure, a re-preparation is required for the sample and insufficient volume remains, the Project Manager must be alerted and will contact the client for direction on how to proceed.

9.7.2 If persistent contamination occurs in the laboratory, analyses must be halted until the source can be identified and isolated. When the contamination issue is resolved, sample analyses may proceed.

9.7.3 Any other issues that potentially affect data quality **must** be addressed with the Project Manager.

10.0 Calibration and Standardization

See Section 11.0 for instrument procedures.

Note: Only one read (burn) is obtained for each analytical run.

Note: The laboratory reporting limit is at or above the lowest initial calibration standard concentration.

10.1 Initial Calibration

10.1.1 The PS200II must be calibrated before you can run samples. The following procedure is performed after the start-up (11.4) and before

running samples. Calibration standards are digested along with samples.

10.1.2 To perform a standard calibration, click on the WinHG icon on the desktop. The WinHG runner 1.7 screen will appear. Tighten the tubing clamps on the pump. Under the Control tab, turn pump on. The lamp should already be on, as well as the gas (0.10 LPM). Under the sample tab, select the rack to be run. Racks are built in the Rack Editor and batches are transferred from the Sample Table on the desktop. When the Sample Table icon is clicked on, a list of sample batches appears. Click on the batch to be run and click on the Build Hg Table button at the bottom of the page. A blank table appears; press Ctrl-Shift-L and the batch will appear. Copy and paste the batch to the Rack Editor. The Client ID will be in the first columns and the laboratory ID numbers in the second column. The calibration standards will be in the far right column. A template with the opening sequence is stored in the Rack Editor. Click on File and then open Rack 1. The continuing calibration standards can be added in the right column, where needed. Name the Rack by clicking File-Save As (usually V4mmddyy or V4mmddyA or V4mmddyB, etc.). When the rack is ready to run, select it from the drop-down list on the WinHg runner, under the Sample tab, and set the beginning and end cups. Under the Move Tip tab, press To Rinse. Click on the Run Auto button and the system will run the standards and then the samples. It is assumed that the six standards have been loaded as standards 1-6 on the standards screen.

10.1.3 The results of the calibration are automatically stored. To review the results, open the Data Base by clicking on the DB button at the top of the WinHg runner screen, then the calibration tab. The instrument generates a calibration curve based on linear regression.

10.1.3.1 The correlation coefficient must be ≥ 0.995. A forced intercept calibration model is not utilized.

10.1.3.2 For ILM05.4, standards must be within 5% of the true value (except the CRQL standard).

10.1.3.3 If above criteria are not met, check for outliers or reanalyze the entire curve. It may only be necessary to reanalyze a single outlier in order to verify the initial results. See section 10.5.

10.2 Initial Calibration Verification/Initial Calibration Blank (ICV/ICB)

10.2.1 The ICV is digested with samples and prepared with each sample batch. The results of the ICV must agree within 10% for SW-846, 5% for MCAWW, and 20% for CLP, of the "true" values. If not, the run must be terminated and the instrument recalibrated. If recalibration does not fix the problem, shut down the instrument, label with an "OUT OF CALIBRATION" tag, and request instrument service.

10.2.2 Follow the ICV with the initial calibration blank (ICB). The mercury results for the blank must be less than the EPA CRDL/CRQL for CLP or less than the reporting limit (PQL) for SW-846. If not, terminate the analysis and recalibrate. A reanalysis of the ICB may be performed for SW-846 prior to recalibration. If recalibration does not fix the problem, shut down the instrument, label with an "OUT OF CALIBRATION" tag, and request instrument service.

10.2.2.1 The DOD-QSM and MCAWW require that the results for the ICB must be less than the MDL/LOD.

10.3 Continuing Calibration Verification/Continuing Calibration Blank (CCV/CCB)

10.3.1 Verify the calibration every 10 samples and at the end of the analytical sequence using the 5.0 µg/L level calibration standard. The results of the check standard must agree within ± 20% of the true value. If not, terminate the analysis, correct the problem, and recalibrate the instrument.

10.3.1.1 For North Carolina regulatory work and for MCAWW, the check standard must agree within ± 10%.

10.3.2 Follow the CCV with the continuing calibration blank (CCB).The results for the CCB must be less than the CRDL/CRQL for CLP or less than the reporting limit (PQL) for SW-846. If not, terminate the analysis and recalibrate. A reanalysis of the ICB may be performed for SW-846 prior to recalibration. If recalibration does not fix the problem, shut down the instrument, label with an "OUT OF CALIBRATION" tag, and request instrument service.

10.3.2.1 The DOD-QSM and the MCAWW require that the results for the CCB must be less than the MDL.

10.4 If the calibration results are acceptable, begin running samples.

10.5 If the calibration results are unacceptable**,** rerun the standards to verify results. When an acceptable calibration is achieved, you can begin running the samples. **If an acceptable calibration is not achieved upon reanalysis of the initial calibration, ICV, CCV, or CCB the entire batch must be re-digested and reanalyzed. If re-digestion and reanalysis, including all procedures in Section 11.0 regarding instrument set up and maintenance, does not yield acceptable results, shut down the instrument, label with an "OUT OF CALIBRATION" tag, and request instrument service. After appropriate service, the entire batch must be re-digested and reanalyzed.**

10.5.1 Samples bracketed by an acceptable Initial Calibration, ICV, ICB, CCV and CCB do not need to be re-digested and reanalyzed if subsequent closing CCVs/CCBs fail.

11.0 Procedure

Documentation must follow the requirements in Quality Control SOP 13.6, "Proper Documentation Procedures"

Note: Only one read (burn) is obtained for each analytical run.

11.1 Powering up the system

11.1.1 **Bring up the WinHg runner screen, go to the Control tab, and press "On," under Hg Lamp. Let the lamp warm up for at least an hour. (This should only be done if the system has been off, such as after a power failure. Otherwise the system should remain on at all times.**

11.1.2 Press the "Power On" button on the **back of the PS200II unit if the unit is powered off.**

11.1.3 **Check the reductant volume and refresh, if needed.**

11.1.4 **Clean the rinse tank using standard lab cleaning practices, and add fresh rinse.**

11.**2** Sample Analysis

Prior to analysis all samples and standards are digested following the appropriate method sample preparation procedure (SPP). The soil SOP is SPP –162, "Solid Sample Mercury Digestion by SW-846 and NYSASP." The water SOP is SPP –074, "Mercury in Water, Manual Digestion Procedure for EPA CLP, NYSASP, and SW-846, and MCAWW."

Note: The **PS200II** must be calibrated before you can run samples. The calibration procedure is given in section 10.0. Autosampler tables automatically go through the calibration process and proceed to run the samples.

Note: See section 9.0 for QC samples, acceptance criteria, and corrective actions for QC failures.

11.**2**.1 Just before analysis, add **55** mL of DI water to all soil samples **and 50 mL of reagent water to all standards.** Next, add 6 mL of hydroxylamine hydrochloride solution to reduce excess permanganate, and mix until the sample is clear. The Leeman **HYDRA AA/PS200II** automatically adds the appropriate amount of stannous chloride during analysis. Pour standards and samples into **tubes** and load into autosampler racks based upon the set-up of the **Rack Editor**.

11.**2**.2 Arrange standards in increasing concentrations and calibrate instrument.

11.**2**.3 Analyze a solution from a different **stock source** than the standards for **the** initial calibration verification (ICV). Determine that the measured value is in agreement with the certified value. If not, recalibrate after determining the problem.

11.**2**.4 Analyze the calibration blank and preparation blank(s). If the calibration blank contains mercury at a value that is greater than the reporting limit terminate the analysis, correct the problem, and recalibrate. **The DOD-QSM requires that the results for the calibration blank must be < the MDL/LOD and < ½ RL for the preparation blank.**

11.**2**.5 Analyze the CRA/CRI standard at the beginning of each sample analysis to verify linearity near the CRDL/CRQL.

11.**2**.6 Analyze samples, sample spike(s), and duplicate(s) monitoring quality control requirements. A serial dilution must also be analyzed for SW-846

methods. This should be a dilution of one sample within each SDG, and/or each sample matrix. This dilution is 1 in 5 (5x).

11.**2**.7 Verify the calibration every 10 samples and at the end of the analytical run with a CCV followed by the CCB. Samples must be bracketed by passing CCV/CCB samples. Samples associated with a failing CCV or CCB must be re-analyzed.

11.**2**.8 **Generate** the mercury run log (Attachment 4). When sample analysis is complete, the run log and original raw data is copied and placed in all associated SDG folders.

11.**3** Transferring Data

11.**3**.1 **In Database, go to the Report tab and press Generate Report. Click on Generate and the raw data will print. Highlight the PRN button and name the file as the run was named (e.g., V4mmddyy, etc.) and click Generate again. The PRN file is then used to generate the Mercury Run Log. Go to the ICP Check icon (Instrument Data Review) on the desktop and locate the PRN file from the drop-down list. Click on Mercury Run Log. The run log screen will appear and then print.**

11.**4** Shutdown Procedure

In routine operation, where the system is likely to be used daily, **just turn the pump off under the WinHg runner control tab, move the tip To Air under the Sample tab, loosen the clamps on the pump housing, and take the lines out of the reagent vessels. For long term shut down, turn off the analyzer by flipping the switch on the back of the unit.**

NOTE**:** Before shutting down the instrument, **word "Idle" should appear in the field on the top of the WinHg runner screen. To interrupt or stop an ongoing procedure, press the STOP key. The instrument can then be shut down.**

12.0 Data Analysis and Calculations

Calculations must be consistent with the QC SOP: Numerical Data Reduction.

12.1 Linear Calibration using Least Squares Regression

$$y = ax + b$$

where: y = Instrument response (peak area)
a = Slope of the line (coefficient of x)
x = Concentration of the calibration standard
b = The intercept

Linear Regression by Least Squares:

$$y_1^{'} = \mathbf{ax_i + b}$$

Where: **b = intercept**
x_i = Mass of the analyte in the ith calibration standard aliquot injected
$y_1^{'}$ = calculated response for the ith calibration standard

The sum of the squares of the differences is minimized to obtain a and b:

$$\sum_{i=1}^{N}(y_i - y_1^{'})^2$$

12.2 Correlation Coefficient r:

$$r = \frac{N\left[\sum_{i=1}^{N}(x_i y_i)\right] - \left[\sum_{i=1}^{N}(x_i)\right]\left[\sum_{i=1}^{N}(y_i)\right]}{\sqrt{N\left[\sum_{i=1}^{N}(x_i^2)\right] - \left[\sum_{i=1}^{N}(x_i)\right]^2} - \sqrt{N\left[\sum_{i=1}^{N}(y_i^2)\right] - \left[\sum_{i=1}^{N}(y_i)\right]^2}}$$

Where: **r = Correlation Coefficient**
N = number of data points (equals 5 in a 5 point curve)
y = response
i = index variable (first data point i = 1)
x = Mass of the analyte in the calibration standard aliquot injected

12.3 Concentration Calculations: read the 'digestion concentration" from the calibration curve, directly from the instrument read-out or from the method of standard additions (see Section 12.10).

12.**3**.1 Concentration of Mercury in aqueous samples =

$$\frac{\text{(digestion concentration (µg/L)) (digestate volume (L))(dilution factor)}}{\text{(sample volume (L))}}$$

12.**3**.2 Concentration of Mercury in soil samples =

$$\frac{\text{(digestion concentration (µg/L)) (digestate volume (L)) (dilution factor)}}{\text{(sample weight (g)) (\% solid)}}$$

12.**4** Calculation of percent recovery:

12.**4**.1 LCS and surrogates:

$$\%R = \frac{Amount\ found}{Amount\ spiked}\ x\,100$$

12.**4**.2 Matrix spikes:

$$\%\,R = \frac{Amount\ in\ spiked\ sample - Amount\ in\ unspiked\ (native)\ sample}{Amount\ spiked}\ x\,100$$

12.**5** Calculation of % RSD

$$\%RSD = \left(\frac{Standard\ deviation}{\overline{X}}\right) \times 100$$

12.**6** Calculation of RPD

$$RPD = \frac{|Value\ 1\ -\ Value\ 2|}{(Value\ 1\ +\ Value\ 2)/2}\ x100$$

12.**7** Calculation of %Difference (%D)

$$\%Diff = \frac{Value\ -\ \overline{Reference\ \ value}}{\overline{Reference\ \ value}}\ x\ 100$$

12.**8** Dilutions

12.**8**.1 Sample concentrations falling above the analytical range, i.e. highest calibration standard concentration, must be diluted.

12.**8**.2 A sample dilution must yield a value within the upper half of the analytical concentration range to be acceptable.

12.**8**.3 The level of dilution selected is determined by the detected concentration and the expertise of the analyst.

12.**8**.4 Samples are analyzed undiluted unless in the analyst's technical judgement a dilution is required based on the appearance of the sample, prior knowledge of the client or site, instrument problems related to analysis of a particular sample set, etc.

12.9 Method of Standard Additions:

To equal volumes of the sample are added a series of standard solutions containing different known quantities of mercury. All solutions are diluted to the same final volume.

Prepare addition one so that the resulting concentration is approximately 50 percent of the expected absorbance from the indigenous (from the sample matrix) analyte in the sample.

Prepare additions 2 and 3 so that the concentrations are approximately 100 and 150 percent of the expected endogenous (from the sample itself) sample absorbance.

The absorbance of each solution is determined and the result plotted on the vertical axis of a graph with the concentrations of the known standards on the horizontal axis. Extrapolate the resulting line to zero absorbance. The point of the interception with the abscissa (x-coordinate) is the endogenous concentration of the sample. See Attachment 3.

13.0 Method Performance

This method was validated through in-house laboratory studies of method detection limits and precision and accuracy for single analyst. The data are retained by the QA department.

14.0 Pollution Prevention

The solvents used in this procedure pose little threat to the environment when recycled and managed properly. Pollution prevention encompasses any technique that reduces or eliminates the quantity or toxicity of waste at the point of generation. Numerous opportunities for pollution prevention exist in laboratory operation. The EPA has established a preferred hierarchy of environmental management techniques that places

pollution prevention as the management option of first choice. Whenever feasible, laboratory personnel should use pollution prevention techniques to address their waste generation. When wastes cannot be feasibly reduced at the source, the Agency recommends recycling as the next best thing.

15.0 Waste Management

It is the laboratory's responsibility to comply with all federal, state, and local regulations governing waste management, particularly the hazardous waste identification rules and land disposal restrictions, and to protect the air, water, and land by minimizing and controlling all releases from fume hoods and bench operations. Compliance with all sewage discharge permits and regulations is also required. See SOP 12.1, "Hazardous Waste Disposal", regarding laboratory procedures for recycling solvent waste streams.

Samples preserved with HCl, HNO_3, or H_2SO_4 to pH <2 are hazardous and must be must be handled as hazardous waste.

Refer to the Hazardous Waste Management and Safety SOPs located in the lab.

16.0 References

16.1 "Leeman PS200 Set-up and Operation Manual"

16.2 U.S. EPA CLP SOW for Inorganic Analysis, ILM04.1, ILM05.4

16.3 Test Methods for Evaluating Solid Waste, Physical/Chemical Methods, SW-846, Methods 7470A and 7471A/**7471B**

16.4 Chemical Analysis of Water and Wastes, Method 245.1 , Revision 3.0, 1994

16.5 Quality Control SOP, 13.6, "Proper Documentation Procedures"

16.6 Quality Control SOP 13.4, "Numerical Data Reduction"

16.7 "Less is Better: Laboratory Chemical Management for Waste Reduction," American Chemical Society Department of Government Relations and Science Policy, 1155 16th Street, N.W., Washington DC, 20036, (202) 872-4477.

16.8 NELAC Standards, **effective, July 2003**

16.9 QA-G6: Guidance for the Preparation of Standard Operating Procedures for Quality-Related Operations EPA/600/R-96/027, November 1995.

16.10 Standard Methods for the Examination of Water and Wastewater, 20th (1998) Edition, Method 1080

16.11 Code of Federal Register, 40 CFR, Part 136, "Guidelines for Establishing Test Procedures for Priority Pollutants"

16.12 CompuChem Quality Manual, Revision **12**, **August 3, 2009, plus revisions**

16.13 Sample Control SOP 4.6, "Storing Samples"

16.14 Department of Defense Quality Systems Manual of Environmental Laboratories, Version 3 Final, January 2006

17.0 Attachments as Tables, Diagrams and Flowcharts

17.1 Attachment 1 – Standards/QC Preparation Log for Cold Vapor Mercury

17.2 Attachment 2 – Mercury Run Log

17.3 Attachment 3 – Standard Addition Plot from SW-846 7000B

ORIGINAL MASTER COPY CONTROLLED COPY
If words above are not highlighted, this is an uncontrolled copy of this document.

Attachment 1

Standards/QC Preparation Log for ICP Metals/Mercury Page 1 of 3 **Case/SDG:**_____

COMPUCHEM a division of Liberty Analytical Corp. Worksheet 1Q (1) 2

REAGENTS	REF#[1]	MANUFACTURER	LOT#	EXPIRATION DATE
SULFURIC ACID (H_2SO_4)	1m2-187-13	CALEDON	67048	03/12
NITRIC ACID (HNO_3)	1m2-187-12	JT BAKER	H02026	03/12
POTASSIUM PERMANGANATE ($KMnO_4$)	1m2-186-4	JT BAKER	G10663	07/11
HYDROCHLORIC ACID (HCL)	1m2-187-17	CALEDON	68763	04/12
POTASSIUM PERSULFATE ($K_2S_2O_8$)	1m2-184-10	CALEDON	64278	11/10
HYDROGEN PEROXIDE (H_2O_2)	1m2-186-8	CALEDON	65827	08/11
STANDARDS				
XCL 20R	1m2-186-12	HIGH PURITY	0825902	09/22/09
XCL LCS 10XR	8K21001	HIGH PURITY	0832331	11/21/09
ERA PPT (540)	1m2-187-4	ERA	540	03/03/10
EPA LCS (0405)	1m2-184-27	EPA	0405	11/25/09
ICV-1 (0307)	1m2-187-5	EPA	0307	02/16/10
ILM05.3 MATRIX SPIKE	1m2-186-7	HIGH PURITY	0821413	08/04/09
SILVER (Ag) 100ppm	7m1-42-6	HIGH PURITY	0815526	12/15/09
TCLP 500	1m2-186-27	HIGH PURITY	0835022	12/18/09
ARSENIC (As) 1000ppm	7m1-39-21	HIGH PURITY	0731224	11/11/09
MERCURY (Hg) 20ppm	1m2-186-15	HIGH PURITY	0826123	09/19/09
ICV-5 (0508) Hg	1m2-186-22	EPA	0508	11/20/09

[1]Ref#=Logbook ID, Page number, and item number from Materials Receipt Log
[2]Standard Lot Number consist of standard ID, date prepared, and initials of preparer

STANDARD SOLUTIONS PREPARED BY:_____ DATE:_____

ENTERED BY:_____ DATE:_____

REVIEWED BY:_____ DATE:_____

The presence of the Chemist's/Analyst's employee ID number, or signature, on this worksheet attests that strict compliance with the method's SOP has occurred. Any SOP deviations require documentation by the responsible chemist/analyst together with the chemist's/analyst's initials and the initials of the lab supervisor and a QA department representative, signifying approval of the deviation.

12/03/07:RM

ORIGINAL MASTER COPY CONTROLLED COPY
If words above are not highlighted, this is an uncontrolled copy of this document.

Attachment 1 (Continued)

Standards/QC Preparation Log for ICP Metals/Mercury Page 2 of 3 **Case/SDG:**_____

COMPUCHEM a division of Liberty Analytical Corp. Worksheet 1Q (1) 2

STANDARD LOT NUMBER[2]	PREPARATION INSTRUCTIONS
Hg 100ppb- 05-11-09 – DD	Place in a 100mL volumetric flask: 0.5mL of 20ppm Hg stock solution 2.5mL of concentrated HNO_3 Baker instra-analyzed Trace Metals grade or equivalent Dilute to 100mL volume with reagent water (**PREPARE DAILY**)
$K_2S_2O_8$- 05-08-09 - DD Potassium Persulfate	Place in a 1000mL Erlenmeyer flask: 50.0g of $K_2S_2O_8$ Baker instra-analyzed Trace Metals grade or equivalent Dilute to 1000mL with reagent water. Transfer to a re-pipettor bottle (**PREPARE AS NEEDED**)
$KmnO_4$. 05-08-09 - NB Potassium Permanganate	Place in a 2000mL volumetric flask: 100.0g of $KmnO_4$ Baker instra-analyzed Trace Metals grade or equivalent Dilute to 2000mL with reagent water (**PREARE AS NEEDED**)
HNO_3- 05-08-09 - DD Nitric Acid	Place in a 2000mL volumetric flask: 500mL of Deionized water 1000mL of concentrated HNO_3 Baker instra-analyzed Trace Metals grade or equivalent Dilute to 2000mL with reagent water (**PREPARE AS NEEDED**)
HCl- 05-08 -09 - DD Hydrochloric Acid	Place in a 500mL volumetric flask: 200mL of Deionized water 250mL of concentrated HCl Baker instra-analyzed Trace Metals grade or equivalent Dilute to 500mL with reagent water (**PREPARE AS NEEDED**)

[1]Ref#=Logbook ID, Page number, and item number from Materials Receipt Log
[2]Standard Lot Number consist of standard ID, date prepared, and initials of preparer

STANDARD SOLUTIONS PREPARED BY:_____ DATE:_____

ENTERED BY:_____ DATE:_____

REVIEWED BY:_____ DATE:_____

The presence of the Chemist's/Analyst's employee ID number, or signature, on this worksheet attests that strict compliance with the method's SOP has occurred. Any SOP deviations require documentation by the responsible chemist/analyst together with the chemist's/analyst's initials and the initials of the lab supervisor and a QA department representative, signifying approval of the deviation.

12/03/07:RM

ORIGINAL MASTER COPY CONTROLLED COPY
If words above are not highlighted, this is an uncontrolled copy of this document.

Attachment 1 (Continued)

Standards/QC Preparation Log for ICP Metals/Mercury Page 3 of 3 **Case/SDG:**_____

COMPUCHEM a division of Liberty Analytical Corp. Worksheet 1Q (1) 2

STANDARD LOT NUMBER[2]	PREPARATION INSTRUCTIONS	Resultant Analyte Concentration
ICV-5- 05-11-09-DD	Pipet into a 300mL BOD Bottle 1.0mL of ICV-5 and 99mL of reagent water. Digest according to sample preparation instructions	4.0µg/L
S0/ICB/CCB- 05-11-09-DD	Pipet into a 300mL BOD Bottle 100mL of reagent water Digest according to sample preparation instructions	0.0µg/L
S0.2/CRA/CRI- 05-11-09-DD	Pipet into a 300mL BOD Bottle 0.2mL of Hg 100ppb and 99.8mL of reagent water Digest according to sample preparation instructions	0.2µg/L
S0.5- 05-11-09-DD	Pipet into a 300mL BOD Bottle 0.5mL of Hg 100ppb and 99.5mL of reagent water Digest according to sample preparation instructions	0.5µg/L
S1.0- 05-11-09-DD	Pipet into a 300mL BOD Bottle 1.0mL of Hg 100ppb and 99mL of reagent water Digest according to sample preparation instructions	1.0µg/L
S5.0/CCV- 05-11-09-DD	Pipet into a 300mL BOD Bottle 5.0mL of Hg 100ppb and 95mL of reagent water Digest according to sample preparation instructions	5.0µg/L
S10.0- 05-11-09-DD	Pipet into a 300mL BOD Bottle 10mL of Hg 100ppb and 90mL of reagent water Digest according to sample preparation instructions	10.0µg/L

[1]Ref#=Logbook ID, Page number, and item number from Materials Receipt Log
[2]Standard Lot Number consist of standard ID, date prepared, and initials of preparer

STANDARD SOLUTIONS PREPARED BY:_____ DATE:_____

ENTERED BY:_____ DATE:_____

REVIEWED BY:_____ DATE:_____

The presence of the Chemist's/Analyst's employee ID number, or signature, on this worksheet attests that strict compliance with the method's SOP has occurred. Any SOP deviations require documentation by the responsible chemist/analyst together with the chemist's/analyst's initials and the initials of the lab supervisor and a QA department representative, signifying approval of the deviation.

12/03/07:RM

ORIGINAL MASTER COPY CONTROLLED COPY
If words above are not highlighted, this is an uncontrolled copy of this document.

Attachment 2

Maintenance: _____

Method(s) (circle one): **ILM04.1** **ILM05.4** **Others** 7470A 7471A

Operator(s): _____ **Date/Time** _____ **to** _____

Printed: 5/14/2009

↑	Specified element(s) fail(s) high
↓	Specified element(s) fail(s) low
RR	Re-run sample(s) neat
RR #X	Re-run at a #-fold dilution
#X	Sample run at a #-fold dilution (aliquot of sample diluted with acidified water)
L	Matrix = leachate
W	Matrix = water
S	Matrix = solid
B	Matrix = biological tissue

SDG	Matrix	Comments

Batch

HG Run Log

File Name:

Cup	Sample ID	Client ID	Sample Type	DF	Date	Time	Results	Comments

The presence of the Chemist's/Analyst's employee ID number, or signature, on this run log attests that strict compliance with the method's SOP has occurred. Any SOP deviations require documentation by the responsible chemist/analyst together with the chemist's/analyst's initials and the initials of the lab supervisor and a QA department representative, signifying approval of the deviation.

Reviewed By: _____ Date: _____ Page 1 of 1

ORIGINAL MASTER COPY CONTROLLED COPY
If words above are not highlighted, this is an uncontrolled copy of this document.

Attachment 3

FIGURE 1

STANDARD ADDITION PLOT

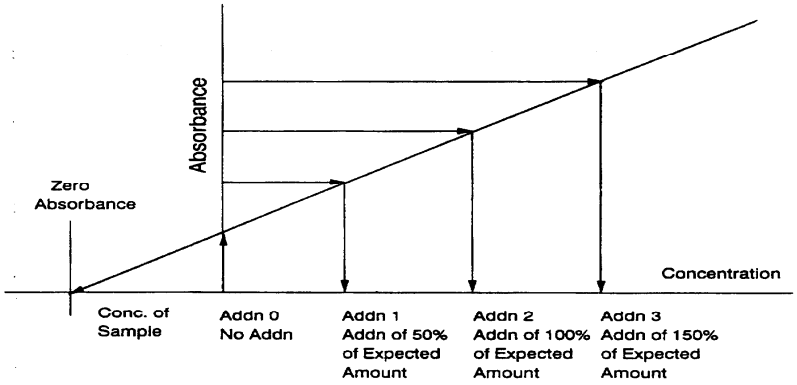

ORIGINAL MASTER COPY CONTROLLED COPY
If words above are not highlighted, this is an uncontrolled copy of this document.

CompuChem
A Division Of
Liberty Analytical Corp.

501 Madison Avenue
Cary, NC 27513

NELAP accredited

SOP DOCUMENTATION FORM

This form must accompany all new and revised Standard Operating Procedures (SOPs) when you turn them in to Quality Assurance for review. Please fill out the entire block below (except effective date).

This is a new procedure _____ revised procedure ✓ outdated procedure (archive) _____

- Procedure Code: IP-559 SOP Section #: 3.5.1.1 Revision #: 9

SOP Title: Alkalinity in Waters and Leachates by MCAWW Method 310.2 and Lachat Method 10-303-31-1-A

Effective date: (QA fills in) 09-30-09

- Procedure prepared by: [signature] Date: 09-11-2009
- Procedure approved by: (If the manager prepared the SOP, a qualified second party should sign) [signature] Date: 09-28-2009
- Reason for change: Annual Review
- This procedure meets the requirements of the following approved method references: Methods for Chemical Analysis of Water and Wastes, March 1983, Method 310.2, 1971, Editorial Revision 1974

Procedure approved by a QA Representative (unless QA Representative signed above):

_____ Date: _____

On an annual basis: Lab managers are required to review lab practices and revise the SOP if necessary. If no revision is necessary, indicate by your signature that the SOP has been reviewed.

Annual Review—Signature: _____ Date: _____

Annual Review—Signature: _____ Date: _____

Annual Review—Signature: _____ Date: _____

Annual Review—Signature: _____ Date: _____

Instrument Procedure 559: Alkalinity in Waters and Leachates by MCAWW **Method 310.2** and Lachat **Method 10-303-31-1-A**

Table of Contents

SECTION	PAGE NO.
Section 1.0 – Scope and Application	2
Section 2.0 – Summary of Method	2
Section 3.0 – Definitions	2-3
Section 4.0 – Interferences	3
Section 5.0 – Safety	**3-4**
Section 6.0 – Equipment and Supplies	4
Section 7.0 – Reagents and Standards	**4-6**
Section 8.0 - Sample Preservation and Storage	**6**
Section 9.0 – Quality Control	6-**8**
Section 10.0 – Calibration and Standardization	8
Section 11.0 – Procedure	**9**
Section 12.0 – Data Analysis and Calculations	9-1**1**
Section 13.0 – Method Performance	1**1**
Section 14.0 – Pollution Prevention	11
Section 15.0 – Waste Management	11-**12**
Section 16.0 – References	12
Section 17.0 – Attachments as Tables, Diagrams and Flowcharts	12
Attachment 1	13
Attachment 2	14
Attachment 3	15

ORIGINAL MASTER COPY CONTROLLED COPY
If words above are not highlighted, this is an uncontrolled copy of this document.

Instrument Procedure 559: Alkalinity in Waters and Leachates by MCAWW **Method 310.2 and Lachat Method 10-303-31-1-A**

1.0 Scope and Application

This automated method is applicable to potable and surface waters and to domestic and industrial waste waters. The applicable range is 10-500 mg of calcium carbonate ($CaCO_3$).

Staff members performing the procedures described in this Standard Operating Procedure (SOP) are responsible for reading, understanding, and complying with the SOP requirements. Supervisors are responsible for directing the analyst to the controlled SOP, and providing adequate explanation of the material contained therein.

This procedure is restricted to use by or under the supervision of analysts experienced in the instrumentation or preparative methods and who have demonstrated the ability to generate acceptable results through QC samples and analyst capability studies.

2.0 Summary of Method

Methyl orange is used as a color reagent for this method because its pH range is the same as the pH of the equivalence point for a total alkalinity titration. The methyl orange indicator is in a weak buffer pH 3.1, which is just below its color change pH. When an alkaline sample is injected, the weakly buffered methyl orange changes color in proportion to the change in pH of the weak buffer, and thus in proportion to the alkalinity of the sample.

3.0 Definitions

3.1 Method detection limit (MDL) – The minimum concentration of an analyte that can be measured and reported with 99% confidence that the analyte concentration is greater than zero and is determined from analysis of a sample in a given matrix containing the analyte (40 CFR, Part 136, Appendix B.)

3.2 Reporting Limit **(RL)** – The laboratory reporting limit is based on the lowest multipoint calibration standard concentration. **The RL is subject to change, but must remain at or above the lowest point in the calibration. Any elevation of the reporting limit must be discussed with the project manager to ensure compliance with client requirements. For samples analyzed under DoD-**

QSM, the Reporting Limit must be greater than or equal to three times the MDL.

3.3 Reporting Units – mg/L

3.4 A Sample Delivery Group (SDG) is defined by the following, whichever is more frequent:

- each 20 field samples received within a case, or
- each 7 calendar day period during which field samples in a case are received (14 calendar days if requested by the client) beginning with the receipt of the first sample.

NOTE: The **DoD**-QSM and SC DHEC do not accept the SDG approach, unless the samples are prepared in a single batch. When a group of up to 20 field samples of a similar matrix are prepared as one batch, method-specified QC samples such as a method blank, laboratory control sample, matrix spike, matrix spike duplicate, and matrix duplicate must also be prepared together at a rate of 5% for **DoD**-QMS and 10% for SC DHEC. If samples are batched together from different sites, project-specific QC must be processed.

3.5 SC DHEC – South Carolina Department of Health and Environmental Control

3.6 **DoD**-QSM – Department of Defense Quality Systems Manual

4.0 Interferences

4.1 Turbidity and color will interfere. Turbidity can be removed by filtration. If the sample is filtered, this method is not approved for NPDES monitoring.

4.2 Chlorine will interfere unless it is reduced by the addition of sodium thiosulfate. This may be added in-stream before the addition of the methyl orange reagent.

5.0 Safety

Appropriate protective equipment and clothing must be used under the assumption that all samples are potentially hazardous. During sample preparation, safety glasses, gloves and lab coats are a minimum requirement. The persistent presence of noxious odors may be indicative of failure of the laboratory ventilation system and must be reported to a supervisor or manager.

ORIGINAL MASTER COPY CONTROLLED COPY
If words above are not highlighted, this is an uncontrolled copy of this document.

Laboratory staff must review the Chemical Hygiene Plan for general safety **policies** and Material Safety Data Sheets (MSDS) for solvents and reagents used in the laboratory. The Chemical Hygiene Plan and MSDS are located in the Quality Assurance department.

6.0 Equipment and Supplies

6.1 A Lachat QuikChem Automatic Flow Injection Ion Analyzer which includes:

6.1.1 Automatic sampler

6.1.2 Proportioning pump

6.1.3 Injection module with a 45 cm sample loop

6.1.4 Colorimeter--interference filter wavelength: 550 nm; Flow cell: 10 mm, 80 µL

6.1.5 Alkalinity (methyl orange) reaction manifold 10-303-31-1-A

6.2 Injection Timing

- pump speed: 35
- cycle period: **52** sec
- load period: 15 sec
- inject period: **37** sec
- inject to start of peak period: **14** sec
- inject to end of peak period: 44 sec
- sample loop length: 10 cm
- gain: 275 x 1

7.0 Reagents and Standards

Preparation of all reagents and standards is documented in the Standards/QC Preparation Log for Alkalinity on Lachat (Attachment 1).

Note: All standards and reagents are subject to change in vendor and in concentration

7.1 Reagent water – All water used during preparation must be reagent-grade Type I with regard to resistivity of > 10 megohm-cm (19th and 20th Editions of Standard

Methods, Method 1080),which is demonstrated to meet the blank contamination acceptance criteria contained in this SOP. It is referred to throughout the remainder of this SOP as reagent water.

7.2 Carbon dioxide-free water

7.2.1 Bring 6 liters of water to a boil and boil for 5 min. Cool before using or the volumetric measurements will be wrong.

7.3 Hydrochloric acid (HCl), 0.1 M

7.3.1 In a 1 liter volumetric flask, dilute 8.3 mL of concentrated HCl to the mark with carbon dioxide-free reagent water. Invert three times to mix.

7.4 KHP Buffer, 25 mM, pH 3.1

7.4.1 In a 1 liter container, dissolve 5.00 g of potassium acid phthalate in 850 mL (± 10 mL) of carbon dioxide-free water. Add 85 mL of 0.1 M HCl, then add acid to bring the pH to 3.1 (± 0.05). If you overrun the endpoint, re-prepare the solution. Pour the solution into a glass storage bottle. Prepare weekly.

7.5 Methyl Orange Reagent

7.5.1 In a **500 mL** volumetric flask, dissolve **62.5 m**g of methyl orange (indicator grade or equivalent) in **250** mL of carbon dioxide-free water. Dilute to the mark **with carbon dioxide-free water** and invert three times. Store the solution in a glass container.

7.6 Stock Standard - 5000 mg of $CaCO_3$/L as sodium carbonate (Na_2CO_3).

7.6.1 In a 200 mL volumetric flask, dissolve 1.060 g of anhydrous primary standard grade sodium carbonate, dried at 250° C for 4 hr, in 900 mL of carbon dioxide-free water. Dilute to the mark and invert three times to mix. Prepare fresh monthly and protect it from the atmosphere because it will absorb carbon dioxide.

7.7 Working Standards

7.7.1 To six 100 mL flasks add, respectively, 10.0, 7.5, 5.0, **2.5,** 0.5, and 0.2 mL of the 5000 mg/l stock standard. A seventh should contain reagent water only for the blank (0 ppm) standard. Dilute each to the mark with carbon dioxide-free water and invert three times to mix. This makes working standards with the respective concentrations of 500, 375, 250, **125,** 25, and 10 mg of $CaCO_3$/L.

8.0 Sample Preservation and Storage

8.1 Samples are preserved and stored according to the tables in Sample Control SOPs 4.1, "Receiving Samples" and 4.6, "Storing Samples."

8.2 Samples must be refrigerated at 4 °C ± **2° C** and analyzed as soon as **possible**. Do not open the sample bottles before analysis. The holding time is 14 days **from sampling**. Sample bottles need to be filled completely for zero head space. If not, **it must be addressed with the Project Manager who will contact the client for guidance. If the client directs the laboratory to proceed with the analysis, the lack of head space must be narrated in the final report.**.

9.0 Quality Control

9.2 Analyze a calibration blank following the initial calibration. The absolute value of calibration blank must not be greater than one half the reporting limit. If that criterion is not met, then determine where the problem is occurring. Correct the problem, recalibrate and reanalyze. Document any instrument maintenance in the maintenance log.

9.3 A continuing calibration blank (CCB) must be analyzed after the CCV at a 10% frequency throughout the analytical run. The CCB control limits and corrective actions are the same as those of the ICB described above. Reanalyze all affected samples.

9.4 For every preparation batch of up to 20 samples or for each SDG, whichever is more frequent, analyze a method blank. This blank is used to ascertain whether sample concentrations reflect contamination. This blank must be free from analyte impurities and must not contain an analytical result greater than the reporting limit. If the blank exceeds the reporting limit, stop the analysis, determine and correct the problem, recalibrate the instrument, and reanalyze any affected samples.

NOTE: Carbon dioxide-free water must be used for all blanks (including ICB and CCB).

9.5 A laboratory control sample (LCS) must be prepared with every 20 samples or with each SDG, whichever is more frequent. The LCS is prepared from the same solution as the ICV. The results of the LCS must fall within 90-110% of the true value. If, after re-analysis, the LCS still falls outside these control limits, determine and correct the problem; recalibrate and reanalyze the entire batch.

9.6 A matrix spike and matrix spike duplicate (MS/MSD) may be prepared for every 20 samples or for each SDG, if requested by the client. **The MS/MSD may be used to fulfill that requirement. The percent recovery should be 75 - 125% and the RPD (relative percent difference) should be ≤ 20%.**

If the MS/MSD recovery is not within the control limits of 75-125%, and the results of the LCS are acceptable, a quality assurance notice or narrative discussion is required to indicate that matrix interference is present, otherwise, reanalysis is required.

Note: DoD-QSM requires that the same limits be applied to the MS/MSD as the LCS. Therefore, for DoD-QSM the percent recovery should be 90 - 110% and the RPD (relative percent difference) should be ≤ 20%.

9.7 Samples identified as field blanks must not be used for MS/MSD analysis.

9.**8** A duplicate must be prepared once per batch. For SC DHEC a duplicate is required every 10 samples. The duplicate may be a matrix spike and matrix spike duplicate (MS/MSD) or a sample and sample duplicate. The RPD between the MS/MSD or sample and duplicate should be within 20%.

9.**9** Contingency

9.**9**.1 If due to a lab accident or to QC failure a re-preparation is required for the sample and insufficient volume remains, the Project Manager must be alerted and will contact the client for direction on how to proceed.

9.**9**.2 If persistent contamination occurs in the laboratory, analyses must be halted until the source can be identified and isolated. When the contamination issue is resolved, sample analyses may proceed.

9.**9**.3 Any other issues that **could** potentially affect data quality **must** be addressed with the Project Manager.

10.0 Calibration and Standardization

10.1 Set up the instrument as detailed in section 11.0.

10.2 Analyze the calibration standards prepared in section 7.7.7 in descending concentration order.

10.3 After the instrument has been calibrated and before any samples can be analyzed, the correlation coefficient must be determined to be 0.995 or greater. The lowest reporting level (RL) for this analysis is the concentration of the lowest point of calibration curve (10 mg/L).

10.4 A calibration verification solution (ICV) must be analyzed after the initial calibration before and samples are analyzed. This certified solution may be obtained for the EPA of other vender. The control limits for the ICV are 90-110% of the true value. If the control limits for the ICV are not met, reanalyze the ICV. If the ICV continues to fail, recalibrate.

10.5 A continuing calibration verification (CCV) solution must be analyzed at a 10% frequency throughout the analytical run. The CCV is the mid-range standard (250 mg/L). **SC DHEC requires a low-level CCV, at the reporting limit, be analyzed every ten samples.** The CCV control limits and corrective actions are the same as those of the ICV described above. Reanalyze all affected samples.

11.0 Procedure

Documentation must follow the requirements in Quality Control SOP 13.6, "Proper Documentation Procedures".

11.1 Using the manifold diagram table (Attachment 2) as a guide:

11.1.1 Inspect the modules for proper connections.

11.2 Turn on the power for all modules.

11.3 Place the reagent transmission lines in the proper reagents.

11.4 Pump the system until a stable baseline is attained.

11.5 Program the data system to initial parameters (or those empirically determined).

11.6 Place the calibration standards and the blank in the sample tray in descending order of concentration followed by check standards and samples. Print out the alkalinity run log (Attachment 3).

11.7 At the end of the run, place all feed-lines in reagent water, flush the system, and pump dry.

11.8 Turn off the pump and all modules, and release the tube cassettes.

Note: Thoroughly mix sample before aliquotting.

12.0 Data Analysis and Calculations

Calculations must be consistent with the Quality Control SOP 13.4, "Numerical Data Reduction."

12.1 Calculation of the mean or average of a set of values:

$$\overline{X} = \frac{\sum_{i=1}^{n} X_i}{n}$$

where: n = total number of values
x_i = each individual value used to calculate the mean
x = the mean of n

12.2 Calculation of the standard deviation of a set of values:

$$\text{Standard deviation} = \sqrt{\frac{\sum_{i=1}^{n}\left(X_n - \overline{X}\right)^2}{n-1}}$$

12.3 Calculation of percent recovery:

12.3.1 LCS:

$$\%R = \frac{Amount\ found}{Amount\ spiked}\ x\ 100$$

12.3.2 Matrix spikes:

$$\%\ R = \frac{Amount\ in\ spiked\ sample - Amount\ in\ unspiked\ (native)\ sample}{Amount\ spiked}\ x\ 100$$

12.4 Calculation of % RSD

$$\%RSD = \left(\frac{Standard\ deviation}{\overline{X}}\right) \times 100$$

12.5 Calculation of RPD

$$RPD = \frac{|Value\ 1\ -\ Value\ 2|}{(Value\ 1\ +\ Value\ 2)/2}\ x100$$

12.6 Calculation of %Difference (%D)

$$\%Diff = \frac{Value\ -\ \overline{Reference\ \ value}}{\overline{Reference\ \ value}}\ x\ 100$$

12.7 Alkalinity (mg/L) concentration

Concentration = [sample concentration (mg/L)] x [dilution factor]

12.8 Calculating Dilutions

If a sample concentration exceeds the high level standard a dilution must be performed. Determine a level of dilution that will result in a value within the upper half of the calibration range.

12.8.1 Dilution factor

$$Dilution\ factor = \frac{\mu L\ most\ conc.\ extract\ used\ to\ make\ dilution + \mu L\ clean\ solvent}{\mu L\ most\ conc.\ extract\ used\ to\ make\ dilution}$$

13.0 Method Performance

This method was validated through in-house laboratory studies of method detection limits and precision and accuracy for single analyst. The data are retained by the QA department.

14.0 Pollution Prevention

The solvents used in this procedure pose little threat to the environment when recycled and managed properly. Pollution prevention encompasses any technique that reduces or eliminates the quantity or toxicity of waste at the point of generation. Numerous opportunities for pollution prevention exist in laboratory operation. The EPA has established a preferred hierarchy of environmental management techniques that places pollution prevention as the management option of first choice. Whenever feasible, laboratory personnel should use pollution prevention techniques to address their waste generation. When wastes cannot be feasibly reduced at the source, the Agency recommends recycling as the next best thing.

15.0 Waste Management

It is the laboratory's responsibility to comply with all federal, state, and local regulations governing waste management, particularly the hazardous waste identification rules and land disposal restrictions, and to protect the air, water, and land by minimizing and controlling all releases from fume hoods and bench operations. Compliance with all sewage discharge permits and regulations is also required. See SOP 12.1, Hazardous Waste Disposal, regarding laboratory procedures for recycling solvent waste streams.

Samples preserved with HCl, HNO_3, H_2SO_4, NaOH, ZN acetate are hazardous and must be handled as hazardous waste.

Refer to the Hazardous Waste Management and Safety SOPs located in the lab.

16.0 References

16.1 Lachat Autoanalyzer QuikChem Method 10-303-31-1-A, January 2001

16.2 Methods for Chemical Analysis of Water and Wastes, March 1983, Method 310.2, **1971,** Editorial Revision **1974**

16.3 Standard Methods for the Examination of Water and Wastewater, 20th (1998) Edition, Method 1080

16.4 Code of Federal Register, 40 CFR, Part 136, "Guidelines for Establishing Test Procedures for Priority Pollutants"

16.5 Quality Control SOP 13.6, "Proper Documentation Procedures"

16.6 Quality Control SOP 13.4, "Numerical Data Reduction"

16.7 "Less is Better: Laboratory Chemical Management for Waste Reduction," American Chemical Society Department of Government Relations and Science Policy, 1155 16th Street, N.W., Washington DC, 20036, (202) 872-4477.

16.9 NELAC Standards, **effective July** 2003**, plus revisions**

16.10 QA-G6: Guidance for the Preparation of Standard Operating Procedures for Quality-Related Operations EPA/600/R-96/027, November 1995.

16.12 CompuChem Quality Manual, Revision **12, August 3, 2009, plus revisions**

17.0 Attachments as Tables, Diagrams, Flowcharts

17.1 Attachment 1 – Standards/QC Preparation Log

17.2 Attachment 2 – Alkalinity Manifold Diagram

17.3 Attachment 3 – Alkalinity Determination Run Log Example

Attachment 1

Standards/QC Preparation for Alkalinity on Lachat

File Sequence# _____

COMPUCHEM a Division of Liberty Analytical Corporation WORKSHEET 1 UUU 1

STANDARDS AND REAGENTS TRACEABILITY*	REF#	MANUCTURER	LOT#	EXPIRATION DATE
Hydrochloric Acid (HCl) 0.1 M	1M2-182-2	Caledon	60544	3/11/10
Potassium acid phthalate (KPH Buffer)	1U(6)1-6-28	EM Science	41303232	9/10/11
Methyl Orange Reagent	1U(6)1-15-14	JT Baker	E24603	09/10/11
Sodium Carbonate dried (anhydrous-primary standards grade)	1U(6)1-15-7	JT Baker	G06153	9/10/11
Alkalinity ICV/LCS (SECOND SOURCE)Standard Solution Concentration =100mg/L dilution = 300mg/L	1U(6)1-15-15	NSI Solutions	060508	06/10

STANDARD/REAGENT LOT NUMBER**	PREPARATION INSTRUCTIONS
KHP Buffer, 25 mM, pH 3.1 – 08 14 09 jm	Place in a 1000-mL volumetric flask: 5.00g potassium acid phthalate. Dissolve in carbon dioxide free water. Add 85-mLof 0.1 M HCl, then add acid to pH of 3.1 (± 0.05). Dilute to volume with carbon dioxide free water. Prepare fresh weekly.
Methyl Orange – 08 03 09 jm	87.5 mg of the Methyl Orange Sodium Salt, Powder into 500ml of DI water
Na_2Co_3 (5000 ppm) – 08 12 09 jm (Stock Solution)	Place in a 200-mL volumetric flask: 1.060g of dried sodium carbonate Dilute to the mark with carbon dioxide free water. Prepare fresh monthly or more often as needed.
Na_2Co_3 (500 ppm) – 08 12 09 jm	Place 10-mL of stock solution in a 100-mL volumetric flask Dilute to mark with deionized water. Prepare fresh weekly or more often as needed.
Na_2Co_3 (375 ppm) - 08 12 09 jm	Place 7.5-mL of stock solution in a 100-mL volumetric flask Dilute to mark with deionized water. Prepare fresh weekly or more often as needed.
Na_2Co_3 (250 ppm) – 08 12 09 jm USE FOR CCV	Place 5-mL of stock solution in a 100-mL volumetric flask Dilute to mark with deionized water. Prepare fresh weekly or more often as needed.
Na_2Co_3 (25 ppm) – 08 12 09 jm	Place 0.5-mL of stock solution in a 100-mL volumetric flask Dilute to mark with deionized water. Prepare fresh weekly or more often as needed.
Na_2Co_3 (10 ppm) 08 12 09 jm	Place 0.2-mL of stock solution in a 100-mL volumetric flask Dilute to mark with deionized water. Prepare fresh weekly or more often as needed.

*Ref# = Logbook ID, Page number, and item number from Materials Receipt Log / **Standard Lot Number consists of standard ID, date prepared, and initials of preparer.

The presence of the Chemist's employee ID number, or signature, on this run log attests that strict compliance with the method's SOP has occurred. Any SOP deviations require documentation by the responsible chemist together with the chemist's initials and the initials of the lab supervisor and a QA department representative, signifying approval of the deviation.

Standard Sclutions Prepared and Entered By: _____ Date: _____

Reviewed By: _____ Date: _____

04/14/09: jm

ORIGINAL MASTER COPY CONTROLLED COPY
If words above are not highlighted, this is an uncontrolled copy of this document.

Attachment 2

17.3. ALKALINITY MANIFOLD DIAGRAM

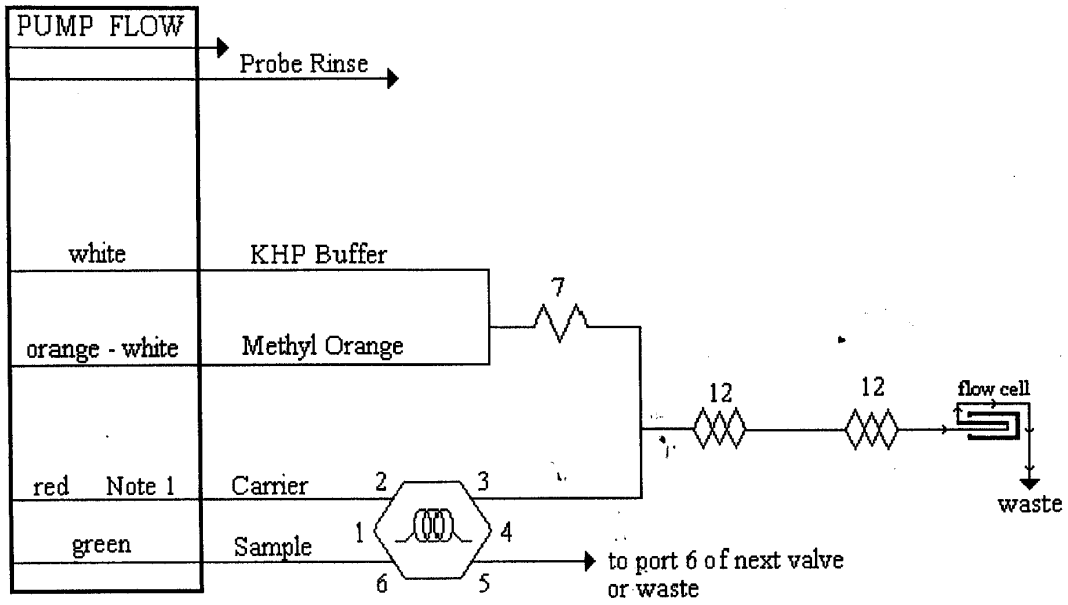

Carrier: DI water (CO_2 free)
Manifold Tubing: 0.8 mm (0.032 in) i.d. This is 5.2 µL/cm.
AE Sample Loop: 100 cm of 0.8 mm (0.032 in) i.d. This is 5.2 µL/cm
QC8000 Sample Loop: 100 cm of 0.8 mm (0.032 in) i.d. This is 5.2 µL/cm
Interference Filter: 550 nm

Apparatus: An injection valve, a 10 mm path length flow cell, and a colorimetric detector module is required.

7: 135 cm of tubing on a 7 cm coil support
12: 255 cm of tubing on a 12 cm alternating coil support

Note 1: Remove the steel pins from the carrier reagent line.
Note 2: **PVC PUMP TUBES MUST BE USED FOR THIS METHOD.**

Attachment 3

LACHAT C2 Run Log

Printed: 2/22/2009

Analyst(s): _____ Analysis: ALKALINITY 310.2 File Name: 0204ALK1

Date/Time _____ Instrument: LACHAT C2 Units: _____

SDG	Matrix	Comments
0901052	Water	

Batch
9012139

Cup	Sample ID	Client Id	Sample Type	Dilut	Date	Time	Results	Comments
1	500	500	CAL	1	02/04/2009	13:55:00	32098304.0	
2	375	375	CAL	1	02/04/2009	13:55:53	19749710.0	
3	250	250	CAL	1	02/04/2009	13:56:46	10120141.0	
4	125	125	CAL	1	02/04/2009	13:57:40	4268007.0	
5	25	25	CAL	1	02/04/2009	13:58:33	469453.0	
6	10	10	CAL	1	02/04/2009	13:59:26	294899.0	
7	0	0	CAL	1	02/04/2009	14:00:20	19917.0	
13	ICV	ICV	ICV	1	02/04/2009	14:02:20	312.3808	
14	ICB	ICB	ICB	1	02/04/2009	14:03:14	3.6845	
1	9012139-BLK1	9012139-BLK1	BLANK	1	02/04/2009	14:05:14	3.5762	
2	9012139-BS1	9012139-BS1	LCS	1	02/04/2009	14:06:08	313.2499	
3	9012139-BSD1	9012139-BSD1	LCS DUP	1	02/04/2009	14:07:01	311.1429	
4	0901052-17	PEI-136	SAMPLE	1	02/04/2009	14:07:53	55.8524	
5	MDL-1	MDL-1	SAMPLE	1	02/04/2009	14:08:45	5.3405	
6	MDL-2	MDL-2	SAMPLE	1	02/04/2009	14:09:38	5.4474	
7	MDL-3	MDL-3	SAMPLE	1	02/04/2009	14:10:30	9.9371	
8	MDL-4	MDL-4	SAMPLE	1	02/04/2009	14:11:22	13.1735	
9	MDL-5	MDL-5	SAMPLE	1	02/04/2009	14:12:14	9.6884	
10	MDL-6	MDL-6	SAMPLE	1	02/04/2009	14:13:07	9.0449	
3	CCV	CCV	CCV	1	02/04/2009	14:14:00	257.3218	
7	CCB	CCB	CCB	1	02/04/2009	14:14:53	4.6562	
11	MDL-7	MDL-7	SAMPLE	1	02/04/2009	14:16:52	6.9300	
12	MDL-8	MDL-8	SAMPLE	1	02/04/2009	14:17:45	4.5781	
3	CCV	CCV	CCV	1	02/04/2009	14:18:38	257.1589	
7	CCB	CCB	CCB	1	02/04/2009	14:19:31	8.0508	

The presence of the Chemist's/Analyst's employee ID number, or signature, on this run log attests that strict compliance with the method's SOP 8.0508has occurred. Any SOP deviations require documentation by the responsible chemist/analyst together with the chemist's/analyst's initials and the initials of the lab supervisor and a QA department representative, signifying approval of the deviation.

Reviewed By: _____ Date: _____ Page 1 of 1

ORIGINAL MASTER COPY CONTROLLED COPY
If words above are not highlighted, this is an uncontrolled copy of this document.

CompuChem
A Division Of
Liberty Analytical Corp.

501 Madison Avenue
Cary, NC 27513

NELAP accredited

SOP DOCUMENTATION FORM

This form must accompany all new and revised Standard Operating Procedures (SOPs) when you turn them in to Quality Assurance for review. Please fill out the entire block below (except effective date).

This is a new procedure _____ revised procedure ✓ outdated procedure (archive) _____

- Procedure Code: IP 609 SOP Section #: 3.5.19.2 Revision #: 10

SOP Title: Fiterable Residue: Total Dissolved Solids by Standard Methods for the Examination of Water and Wastewater

Effective date: (QA fills in) August 7, 2007

- Procedure prepared by: Bob Meierer Date: 7/20/07
- Procedure approved by: (If the manager prepared the SOP, a qualified second party should sign) Date: 8-7-07
- Reason for change: Update SOP based on revised method reference
- This procedure meets the requirements of the following approved method references: Standard Method for the Examination of Water and Wastewater, 20th Edition (1998), Method 2540C

Procedure approved by a QA Representative (unless QA Representative signed above):

_____ Date: _____

On an annual basis: Lab managers are required to review lab practices and revise the SOP if necessary. If no revision is necessary, indicate by your signature that the SOP has been reviewed.

Annual Review—Signature: _____ Date: _____

Annual Review—Signature: _____ Date: _____

Annual Review—Signature: _____ Date: _____

Annual Review—Signature: _____ Date: _____

Instrument Procedure 609: Filterable Residue, Total Dissolved Solids, by **Standard Method for the Examination of Water and Wastewater**

Table of Contents

SECTION	PAGE NO.
Section 1.0 – Scope and Application	2
Section 2.0 – Summary of Method	2
Section 3.0 – Definitions	2-3
Section 4.0 – Interferences	3
Section 5.0 – Safety	3-4
Section 6.0 – Equipment and Supplies	4
Section 7.0 – Reagents **and** Standards	4
Section 8.0 - Sample Preservation **and** Storage	**5**
Section 9.0 – Quality Control	**5**-6
Section 10.0 – Calibration **and** Standardization	6
Section 11.0 – Procedure	6-7
Section 12.0 – Data Analysis **and** Calculations	7-8
Section 13.0 – Method Performance	8
Section 14.0 – Pollution Prevention	8
Section 15.0 – Waste Management	**8**
Section 16.0 – References	**8-9**
Section 17.0 – Attachments as Tables, Diagrams **and** Flowcharts	**9**
Attachment 1	**10**

ORIGINAL MASTER COPY CONTROLLED COPY
If words above are not highlighted, this is an uncontrolled copy of this document.

Instrument Procedure 609: Filterable Residue, Total Dissolved Solids, by **Standard Method for the Examination of Water and Wastewater**

1.0 Scope and Application

This **Standard Operating Procedure (SOP) describes the determination of filterable residue in** drinking, surface, and saline waters. The practical range of the determination is 10 to 20,000 mg/L.

Staff members performing the procedures described in this SOP are responsible for reading, understanding, and complying with the SOP requirements. Supervisors are responsible for directing the analyst to the controlled SOP, and providing adequate explanation of the material contained therein.

This procedure is restricted to use by or under the supervision of analysts experienced in the instrumentation or preparative methods and who have demonstrated the ability to generate acceptable results through QC samples and analyst capability studies.

2.0 Summary of Method

A well-mixed sample is filtered through a glass fiber filter. The filtrate is evaporated and dried to a constant weight at 180° C.

3.0 Definitions

3.1 Filterable Residue - solids that will pass through a glass fiber filter and are then dried to a constant weight at 180° C.

3.2 Method detection limit (MDL) – The minimum concentration of an analyte that can be measured and reported with 99% confidence that the analyte concentration is greater than zero and is determined from analysis of a sample in a given matrix containing the analyte (40 CFR, Part 136, Appendix B.)

3.3 Reporting Units – mg/L

3.4 A **Sample Delivery Group (**SDG**)** is defined by the following, whichever is more frequent:

- each 20 field samples received within a case, or

- each 7 calendar day period during which field samples in a case are received (14 calendar days if requested by the client) beginning with the receipt of the first sample.

NOTE: The DOD-QSM and SC DHEC do not accept the SDG approach, unless the samples are prepared in a single batch. When a group of up to 20 field samples of a similar matrix are prepared as one batch, method-specified QC samples such as a method blank, laboratory control sample, matrix spike, matrix spike duplicate, and matrix duplicate must also be prepared together**.** If samples are batched together from different sites, project-specific QC must be processed.

3.5 SC DHEC – South Carolina Department of Health and Environmental Control

3.6 DOD-QSM – Department of Defense Quality Systems Manual

4.0 Interferences

4.1 Mineralized water containing large concentrations of calcium, magnesium, chloride, and/or sulfate may be hygroscopic and will require longer drying and desiccation time and rapid weighing.

4.2 Samples containing high concentrations of bicarbonate will require careful, and possibly prolonged, drying at 180° C to ensure that all bicarbonate is converted to carbonate.

4.3 Too much residue in the evaporating dish will crust over and entrap water that will not be driven off during drying. Total residue should be limited to about 200 mg.

4.4 Exclude large floating particles/suspended non-homogeneous material, if not representative of the sample.

5.0 Safety

Appropriate protective equipment and clothing must be used under the assumption that all samples are potentially hazardous. During sample preparation safety glasses, gloves and lab coats are a minimum requirement. The persistent presence of noxious odors may be indicative of failure of the laboratory ventilation system and must be reported to a supervisor or manager.

Laboratory staff **must** review the Chemical Hygiene Plan for general safety policies, and Material Safety Data Sheets **(MSDS)** for reagents used in the laboratory. **The Chemical Hygiene Plan and the MSDS are located in the quality assurance department.**

6.0 Equipment and Supplies

6.1 **Glass** fiber filter discs - 4.7 cm or 2.1 cm, without organic binder

6.2 **Filter** holder -membrane filter funnel or Gooch crucible adapter

6.3 **Suction** flask - 500 mL

6.4 Gooch crucibles - 25 mL (if 2.1 cm is used)

6.5 **Evaporating** dishes - porcelain, 100 mL volume (Vycor or platinum dishes may be substituted)

6.6 **Drying** oven - 180° C ± 2° C

6.7 **Desiccator, provided with desiccant contain color indicator of moisture concentration**

6.8 **Analytical** balance - capable of weighing to 0.1 mg.

6.9 Muffle furnace for operation at 550 ºC

6.10 Magnetic stirrer with TFE stirring bar

6.11 Wide-bore pipettes

6.12 Graduated cylinder

7.0 Reagents and Standards

7.1 Reagent water - All water used during preparation should be reagent-grade Type I with regard to resistivity of >10 megohm-cm (20th Edition of Standard Methods, Method 1080), and referred throughout this SOP as reagent water.

8.0 Sample Preservation and Storage

8.1 Samples are preserved and stored according to the tables in Sample Control SOP 4.1, "Receiving Samples" and 4.6, "Storing Samples." Sample holding times are also listed.

8.2 Analysis of the sample should begin as soon as possible since sample preservation is not practical. Refrigerate the samples at 4° C to reduce microbiological decomposition. The holding time is 7 days.

9.0 Quality Control

9.1 A method blank is analyzed with every batch of up to 20 samples. SC DHEC requires a **method blank with** every 10 samples.

9.1.1 The **method** blank must measure less than 10 mg/L of filterable residue. If the **method** blank exceeds 10 mg/L, the entire sample batch associated with the blank must be re-prepared and reanalyzed.

9.2 For every **10** samples**,** at least one duplicate sample analysis should be performed. The sample and duplicate should agree within **5%** **of the average weight.**

9.2.1 If the sample and the duplicate do not agree within **5%** **of the average weight**, a Quality Assurance (QA) notice is required.

9.3 A laboratory control sample (LCS) is analyzed with every batch of up to 20 samples. SC DHEC requires an LCS every 10 samples. The LCS is purchased with a certificate of traceability to NIST.

9.3.1 Acceptance limits are 90 - 110% of the true value. If the LCS recovery falls outside acceptance limits, the entire batch must be evaluated and repeated as needed.

9.4 The balance calibration is checked at the end of each weighing sequence. This is done by weighing a class 1 weight and recording the result in the logbook (Attachment **1**).

9.5 Contingency

9.5.1 If due to a lab accident or to QC failures a re-preparation and re-analysis are required for the sample and insufficient volume remains, the Project

Manager must be alerted and will contact the client for directions on how to proceed.

9.5.2 If persistent contamination occurs in the laboratory, analyses must be halted until the source can be identified and isolated. When the contamination issue is resolved, sample analysis may proceed.

9.5.4 Any other issues that potentially affect data quality should also be addressed with the Project Manager.

10.0 Calibration and Standardization

10.1 Ensure the analytical balance has been calibration for the day prior to use. Refer to Quality Control SOP 13.17, "Analytical Balance Calibration and Maintenance."

10.2 The balance, oven, and weight set serial numbers are recorded in the log for reference.

11.0 Procedure

Documentation must follow the requirements in Quality Control SOP 13.6, "Proper Documentation Procedures". Record the weights described in the procedure below in the Residue Determination Log (Attachment 1).

11.1 Preparing glass fiber filter discs: Place the disc on the membrane filter apparatus or insert it into the bottom of a suitable Gooch crucible. While the vacuum is applied, wash the disc with three successive 20 mL volumes of reagent water. Remove all traces of water by continuing to apply the vacuum after the water has passed through. Discard the washings.

11.2 Preparing evaporating dishes: If volatile residue is to be measured, heat the clean dishes to 550° C for 1 hour in a muffle furnace. If only filterable residue is to be measured, heat the clean dishes to 180° C ± 2° C for 1 hour. Cool them in the desiccator and store until needed. Weigh immediately before use.

11.3 Assemble the filtering unit and begin suction **while thoroughly mixing the sample (magnetic stirrer/TFR stirring bar), pipet a measured volume onto the glass-fiber filter**. If the total filterable residue is low, a larger volume should be used. Sufficient volume of sample should be used to yield at least **2.5** mg of residue. Conversely, because excess residue in the dish may form a water-trapping crust, limit sample to no more than 200 mg. **If more than 10 minutes**

are required to complete filtration, increase the filter size or decrease sample volume.

11.4 Filter the sample through the glass fiber filter and rinse with three 10 mL portions of reagent water **allowing complete drainage between washes**. Continue to vacuum for about 3 minutes after filtration is complete to remove as much water as possible.

11.5 Transfer the volume of the sample to a weighed evaporation dish and evaporate to dryness **in a drying oven**.

11.6 To avoid splattering, place the sample in the oven set at ~ 98° C until the sample reaches dryness. Then increase the temperature to 180° C, being careful not to exceed 180° C. Dry the evaporated sample for at least 1 hr at 180° C ± 2° C and cool in a desiccator. Weigh the dried sample. Repeat the drying procedure until a constant weight is obtained or until the weight **change** is less than **4% of the previous weight or** 0.5 mg. The drying procedure includes re-heating, re-desiccating, and re-weighing.

11.7 If the results are greater than 200 mg, a smaller volume must be filtered to obtain a result less than 200 mg. If the result is less than **2.5** mg, a larger volume, up to 1000 mL, must be filtered to obtain a result greater than **2.5** mg. If 1000 mL sample has less than **2.5** mg residue on the filter, the sample should be reported as < **2.5**mg/L.

If an entire liter must be filtered for a sample designated by the client as QC, an additional liter bottle would be needed by the laboratory to perform the duplicate analysis.

12.0 <u>Data Analysis and Calculations</u>

Calculations must be consistent with the Q**uality** C**ontrol** SOP **13.4, "**Numerical Data Reduction**"**.

12.1 Calculation of filterable residue concentration:

$$\text{filterable residue, mg/}\mathbf{L} = \frac{(A-B) \times 1{,}000}{C}$$

where: A = weight of dish + residue in mg
B = weight of dish in mg
C = volume of sample in mL

13.0 Method Performance

This method was validated through in-house laboratory studies of method detection limits and precision and accuracy for single analyst. The data are retained by the QA department.

14.0 Pollution Prevention

The solvents used in this procedure pose little threat to the environment when recycled and managed properly. Pollution prevention encompasses any technique that reduces or eliminates the quantity or toxicity of waste at the point of generation. Numerous opportunities for pollution prevention exist in laboratory operation. The EPA has established a preferred hierarchy of environmental management techniques that places pollution prevention as the management option of first choice. Whenever feasible, laboratory personnel should use pollution prevention techniques to address their waste generation. When wastes cannot be feasibly reduced at the source, the Agency recommends recycling as the next best thing.

15.0 Waste Management

It is the laboratory's responsibility to comply with all federal, state, and local regulations governing waste management, particularly the hazardous waste identification rules and land disposal restrictions, and to protect the air, water, and land by minimizing and controlling all releases from fume hoods and bench operations. Compliance with all sewage discharge permits and regulations is also required. **See SOP 12.1, "Hazardous Waste Disposal", regarding laboratory procedures for recycling solvent waste streams.**

Samples preserved with HCl, HNO_3, or H_2SO_4 to pH <2 are hazardous and must be handled as hazardous waste.

Refer to the Hazardous Waste Management and Safety SOPs located in the lab.

16.0 References

16.1 **Standards Methods for the Examination of Water and Wastewater, 20th Edition (1998), Method 2540C.**

16.2 Standard Methods for the Examination of Water and Wastewater, 20th (1998) Editions, Method 1080

16.3 Quality Control SOP 13.6, "Proper Documentation Procedures"

16.4 Quality Control SOP 13.4, "Numerical Data Reduction"

16.5 "Less is Better: Laboratory Chemical Management for Waste Reduction," American Chemical Society Department of Government Relations and Science Policy, 1155 16th Street, N.W., Washington DC, 20036, (202) 872-4477.

16.6 NELAC Standards, **June** 2003

16.7 QA-G6: Guidance for the Preparation of Standard Operating Procedures for Quality-Related Operations EPA/600/R-96/027, November 1995.

16.8 CompuChem Quality Manual, Revision **9**, **June 5, 2007**

16.9 Department of Defense Quality Systems Manual for Environmental Laboratories, Final Version 3, January 2006

16.10 Quality Control SOP 13.17, "Analytical Balance Calibration and Maintenance"

17.0 Attachments as Tables, Diagrams **and** Flowcharts

17.1 Attachment **1** – Residue Determination Log

Attachment 1

CompuChem a division of Liberty Analytical Corporation

Worksheek No. 1 S(5)

Filterable Residue (TDS) Method 2450C

Batch Number _____

Page __1___ of ___1_____

Oven Temp: (°C)	Temp In	Date	Time	Temp Out	Date	Time

SDG: _____

Analyst No.: _____ Date: 7/23/2007

Cond	Dish No.	CompuChem No.	Sample Type	Dish Tare - First Weight (g)	Dish Tare - Second Weight (g)	Dish Tare - Third Weight (g)	Sample Volume (mL)	Weight - First Reading (g)	Weight - Second Reading (g)	Weight - Third Reading (g)	Net Residue (Final weight - dish) (g)	Results (net residue / sample vol) (mg/L)	Comment
					NA	NA	100		NA	NA	0.0000	0.0	
		Balance Check											TV =

LCS Acceptance Range = ±10% LCS TV= _____ LCS Reference No.: _____

_____ Date: _____

The presence of the Chemist's employee ID number, or signature, on this run log attests that strict compliance with the method's SOP has occurred. Any SOP deviations require documentation by the responsible chemist together with the chemist's initials and the initials of the lab supervisor and a QA department representative, signifying approval of the deviation.

Balance used for weights: Denver Instr Serial #B034903 S class weights for balance calibration:Serial #NCSN050 Fisher Oven Serial #472 7/23/07: VR

CompuChem
A Division Of
Liberty Analytical Corp.

501 Madison Avenue
Cary, NC 27513

NELAP accredited

SOP DOCUMENTATION FORM

This form must accompany all new and revised Standard Operating Procedures (SOPs) when you turn them in to Quality Assurance for review. Please fill out the entire block below (except effective date).

This is a new procedure _____ revised procedure ✓ outdated procedure (archive) _____

- Procedure Code: IP-801 SOP Section #: 3.6.2.1 Revision #: 14

SOP Title: Total Organic Carbon (TOC) in Water by Standard Methods 5310B and SW-846 Methods 9060 and 9060A

Effective date: (QA fills in) 09-17-2009

- Procedure prepared by: [signature] Date: 09-03-2009
- Procedure approved by: (If the manager prepared the SOP, a qualified second party should sign) [signature] Date: 09/11/09
- Reason for change: Revised based upon procedural review
- This procedure meets the requirements of the following approved method references: Standard Methods for the Examination of Water and Wastewater, 20th Ed, 1998, Method 5310B, SW-846, 3rd Edition, 9/86, Method 9060 and Update IIIB, 11/04, Method 9060A

Procedure approved by a QA Representative (unless QA Representative signed above):

_____ Date: _____

On an annual basis: Lab managers are required to review lab practices and revise the SOP if necessary. If no revision is necessary, indicate by your signature that the SOP has been reviewed.

Annual Review—Signature: _____ Date: _____

Annual Review—Signature: _____ Date: _____

Annual Review—Signature: _____ Date: _____

Annual Review—Signature: _____ Date: _____

Instrument Procedure 801: Total Organic Carbon (TOC) in Water by Standard Methods **5310B** and SW-846 **Methods 9060 and 9060A**

Table of Contents

SECTION	PAGE NO.
Section 1.0 – Scope and Application	2
Section 2.0 – Summary of Method	2
Section 3.0 – Definitions	2-3
Section 4.0 – Interferences	3-**4**
Section 5.0 – Safety	4
Section 6.0 – Equipment and Supplies	4
Section 7.0 – Reagents and Standards	4-6
Section 8.0 - Sample Preservation and Storage	6
Section 9.0 – Quality Control	6-7
Section 10.0 – Calibration and Standardization	8-**9**
Section 11.0 – Procedure	9
Section 12.0 – Data Analysis and Calculations	10-**11**
Section 13.0 – Method Performance	11
Section 14.0 – Pollution Prevention	11
Section 15.0 – Waste Management	11-**12**
Section 16.0 – References	1**2**
Section 17.0 – Attachments as Tables, Diagrams, and Flowcharts	12
Attachment 1	13
Attachment 2	**14**
Attachment 3	**15-16**

Instrument Procedure 801: Total Organic Carbon (TOC) in Water by Standard Methods **5310B and SW-846 Methods 9060 and 9060A**

1.0 Scope and Application

This method includes the measurement of organic carbon in surface and saline waters, domestic and industrial wastes. The method is most applicable to measurement of organic carbon above 10 µg/L.

Staff members performing the procedures described in this SOP are responsible for reading, understanding, and complying with the SOP requirements. Supervisors are responsible for directing the analyst to the controlled SOP, and providing adequate explanation of the material contained therein.

This procedure is restricted to use by or under the supervision of analysts experienced in the instrumentation or preparative methods and who have demonstrated the ability to generate acceptable results through QC samples and analyst capability studies.

2.0 Summary of Method

Water samples are analyzed using the combustion catalytic oxidation non-dispersive infrared (NDIR) detector method. Carrier gas is passed through a total carbon combustion tube filled with oxidation catalyst. The water sample is injected into the combustion tube, after addition of acid and sample purging, both performed automatically by the instrument to remove inorganic carbon. The remaining carbon in the sample is oxidized or decomposes into carbon dioxide (CO_2). The CO_2 is cooled and dehumidified before it passes through the halogen scrubbers into the NDIR detector. The NDIR detector's analog signal forms a peak and the data processor determines the peak area and calculates the TOC result.

3.0 Definitions

3.1 Method detection limit (MDL) – The minimum concentration of an analyte that can be measured and reported with 99% confidence that the analyte concentration is greater than zero and is determined from analysis of a sample in a given matrix containing the analyte (40 CFR, Part 136, Appendix B.)

3.2 Reporting Limit – The laboratory reporting limit is based on the lowest multipoint calibration standard concentration. **The RL is subject to change, but must remain at or above the lowest non-zero point in the calibration. Any elevation of the reporting limit must be discussed with the project manager to ensure compliance with client requirements. For samples analyzed under**

DoD-QSM, the Reporting Limit must be greater than or equal to three times the MDL. For organic methods, values detected below the reporting limit and above the MDL may be reported and qualified as an estimated concentration.

3.3 Reporting Units – mg/L

3.4 An SDG is defined by the following, whichever is more frequent:

- each 20 field samples received within a case, or
- each 7 calendar day period during which field samples in a case are received (14 calendar days if requested by client) beginning with the receipt of the first sample.

NOTE: The **DoD**-QSM and SC DHEC do not accept the SDG approach, unless the samples are prepared in a single batch. When a group of up to 20 field samples of a similar matrix are prepared as one batch, method-specified QC samples such as a method blank, laboratory control sample, matrix spike, matrix spike duplicate, and matrix duplicate must also be prepared together at a rate of 5% for **DoD**-QSM. If samples are batched together from different sites, project-specific QC must be processed.

3.6 CCV = Continuing Calibration Verification

3.7 ICV = Initial Calibration Verification

3.8 SC DHEC – South Carolina Department of Health and Environmental Control

3.9 **DoD**-QSM – Department of Defense Quality Systems Manual

3.10 Nonpurgeable Organic Carbon – This is commonly referred to as TOC and is the organic carbon remaining in an acidified sample after purging the sample with a gas.

4.0 <u>Interferences</u>

4.1 Carbonate and bicarbonate carbon represent interference under the terms of this test and must be removed or accounted for in the final calculation.

4.2 This procedure is applicable only to homogenous samples that can be injected into the apparatus reproducibly by means of a microliter type syringe or pipette.

The openings of the syringe or pipette limit the maximum size of particles that may be included in the sample.

5.0 Safety

5.1 Appropriate protective equipment and clothing must be used under the assumption that all samples are potentially hazardous. During sample preparation safety glasses, gloves and lab coats are a minimum requirement. The persistent presence of noxious odors may be indicative of failure of the laboratory ventilation system and must be reported to a supervisor or manager.

5.2 Laboratory staff must review the Chemical Hygiene Plan for general safety policies, and Material Safety Data Sheets for reagents used in the laboratory.

6.0 Equipment and Supplies

6.1 TOC analyzer - Shimadzu, TOC-VCSH, model # H51104335168

6.1.1 Automatic sample injector - ASI-V, model # H52104301622

61.2 Solid sample analyzer – SMM-5000A, model # H525043

6.2 Glassware is prepared by hand washing with a non-phosphate biodegradable detergent, then rinsed 3 times with deionized water.

6.3 Automatic Pipeters – various

6.4 40 mL glass vials with Teflon®-lined screw caps, purchased pre-cleaned from vendor

7.0 Reagents and Standards

Standards and reagent traceability information must be documented on the Standards/QC Sample Preparation for TOC Waters log sheet **(See Attachment 2)**.

Note: All standards and reagents are subject to change in vendor and in concentration. The Reporting Limits are also subject to change, but must remain at or above the lowest point in the calibration.

7.1 Reagent water - All water used during preparation should be reagent-grade Type I with regard to resistivity of >10 megohm-cm (20th Edition of Standard Methods, Method 1080), and referred throughout this SOP as DI water.

7.2 Phosphoric acid - reagent grade, for all acidifications

7.3 Potassium hydrogen phthalate (KHP) - reagent grade, for standards. This standard can be used to prepare standards if a commercially prepared standard is not available.

7.4 Stock Standards

7.4.1 TOC Stock Standard

A 10,000 ppm stock standard can be prepared by dissolving 4.251 g of KHP (potassium hydrogen phthalate) in 200 mL of DI water. Alternately, it may be purchased with Certificate of Analysis (COA) from a vendor, which is the approach used by the laboratory. The laboratory purchases a 10,000 ppm stock standard from Science Stuff, Inc. (Part # 9578).

7.4.2 TOC Check Stock Standard

A 2,000 ppm stock standard can be prepared by dissolving 0.850 g of KHP in 200 mL of DI water. Alternately, it may be purchased with a COA from a second source vendor, which is the approach used by the laboratory. The laboratory purchases a 2,000 ppm stock standard from Science Stuff, Inc. (Part # 9575).

7.4.3 TOC Second Source Standard

A 1,000 ppm second source standard is purchase, with a COA from Alfa Aesar (Specpure Stock # 42562). This material is used to prepare the ICV and LCS.

7.5 Calibration Standard

7.5.1 A 100 ppm standard is prepared by diluting 5 mL of the **2**,000 ppm standard to **100** mL of DI water and adding 100 µL of concentrated sulfuric as a preservative. This standard is automatically diluted by the instrument's autosampler to 0.0, **1.0, 5.0,** 25, 50, and 100 ppm and used to calibrate the instrument. Make fresh monthly.

7.6 Calibration Verification (ICV, CCV**s**), Laboratory Control Sample (LCS), & Matrix Spikes (MS/MSD)

7.6.1 The second source standard is used to verify the integrity of the initial calibration curve. This 75 ppm standard is referred to as the ICV and also serves as the laboratory control sample (LCS). The 75 ppm standard is prepared by diluting 7.5 mL of the 1,000 ppm second source standard to 100 mL of DI water and adding approximately 100 µL of concentrated sulfuric as a preservative. Make fresh monthly.

7.6.2 The 50 ppm CCV standard is prepared each calibration day by diluting 1.25 mL of the 2,000 ppm TOC Check Stock Standard to 50 mL of DI water and adding approximately 100 µL of concentrated sulfuric acid as a preservative.

7.6.3 The 1.00 ppm CCV standard is prepared each calibration day by diluting 0.5 mL of the 100 ppm Standard to 50 mL of DI water and adding 100 µL of concentrated sulfuric acid as a preservative.

7.7 Purge and Carrier Gas

7.7.1 Oxygen is used as both the purge and carrier gas for the procedure.

8.0 <u>Sample Preservation and Storage</u>

8.1 Samples are preserved and stored according to the tables in Sample Control SOP 4.1, "Receiving Samples" and 4.6, "Storing Samples." Sample holding times are also listed.

8.2 Sampling and storage of samples in glass bottles is preferable although plastic is permissible, provided if free of organic contaminants.

8.3 Samples **must** be kept cool at $4^{o}C$ **± 2°C** and protected from sunlight and atmospheric oxygen with no headspace due to the possibility of oxidation or bacterial decomposition.

8.4 The sample must be acidified to a pH <2 with H_2SO_4.

8.5 Samples must be analyzed within 28 days of collection.

9.0 Quality Control

9.1 A 75 ppm initial calibration verification (ICV) standard, prepared from a second source, is run immediately after the instrument is calibrated.

9.1.1 The ICV also serves as the laboratory control sample (LCS). A laboratory control sample is prepared and analyzed after every 10 samples to meet the requirements of Standard Methods 5310B and every 15 samples to meet the requirements of SW-846 Method 9060.

9.1.2 The acceptance criteria for the LCS tests are recoveries between 90% and 110%. If the LCS recovery is not between 90% and 110%, re-analyze the LCS. If confirmed out of range, re-calibrate the instrument and re-analyze. All samples associated with that LCS must also be reanalyzed. An LCS is analyzed for each **batch of up to 20 samples**.

9.2 An initial calibration blank (ICB) consisting of reagent water is run after the ICV. This result must not be greater than the reporting limit or reanalysis is required.

9.2.1 The ICB also serves as the method blank. A method blank must be analyzed with **every batch of up to 20 samples**. The analyte content must be less than the reporting limit. If the blank contains TOC greater than the reporting limit, reanalyze the blank. If the result is confirmed high, recalibrate the instrument and re-analyze.

9.2.1.1 To meet the requirements of the DOD-QSM, the contents of the analyte in the blank has to be ≤ one-half the reporting limit.

9.3 A matrix spike (MS) and matrix spike duplicate (MSD) are prepared and analyzed with every batch of up to 20 samples. The MS/MSD samples are prepared by adding 500 μL of the 2,000 ppm standard to a 20 mL sample aliquot, yielding a spike amount of 50 ppm. Note: 500 μL should be entered into the analyzer to make the calculation correct.

The acceptance criteria for the MS/MSD samples are 75 - 125% spike recovery and ≤ 20% Relative Percent Difference (RPD). If the MS/MSD does not meet the acceptance criteria, the LCS must be evaluated to determine if the process is in control and to confirm a sample matrix effect. In cases of confirmed matrix effect the data will be reported.

9.4 Contingency

9.4.1 If due to a lab accident or to QC failures, a re-preparation and analysis are required for the sample and insufficient sample volume remains, the Project Manager must be alerted and will contact the client for direction on how to proceed.

9.4.2 If persistent contamination occurs in the laboratory, analysis must be halted until the source of the contamination can be identified and isolated. When the contamination issue is resolved, samples analysis may proceed.

9.4.3 Any other issues that potentially effect data quality should also be addressed with the Project Manager.

10.0 Calibration and Standardization

10.1 Calibration

10.1.1 The TOC analyzer is calibrated using aqueous TOC standard solutions at concentrations of 0.0 (calibration blank), **1.0,** 5**.0**, 25**.0**, 50**.0** and 100 ppm.

10.1.2 Turn on the TOC-VCSH TOC analyzer. Adjust the oxygen flow rate to 40 psi. If necessary, verify a gas flow rate of 200 cc/minute, or 40 psi, coming out of the detector using a flow meter. Verify the baseline is stable and low (less than 20 ppm).

10.1.3 Load a 40 mL vial containing the 100ppm TOC stock standard solution onto the instrument's autosampler.

10.1.4 Set up the instrument's sample table to perform the proper dilutions of the TOC standard stock solution to complete the initial calibration. The total injection volume is 500 µL.

10.1.5 The calibration curve must have a correlation coefficient of ≥ 0.995. **(See Attachment 3 for an example Calibration Curve)**

10.2 Verifying the Calibration

10.2.1 The initial calibration is verified by analyzing the 75 ppm ICV standard and a blank or ICB. The ICV results must be within ± 10% of the true value and the ICB < the reporting limit. If the ICV fails, re-analyze. If the re-analysis, analyze a new initial calibration.

10.2.1.1 To meet the requirements of the DOD-QSM, the **concentration** of the analyte in the blank **must** be ≤ one-half the reporting limit.

10.2.2 A 50 ppm continuing calibration verification (CCV) standard**, a 1.0 ppm continuing calibration verification (CCV) and** a continuing calibration blank (CCB) are analyzed, after every 10 samples, and at the end of the analytical sequence. The results of the CCV**s** must be within ± 10% of the true value and the CCB < the reporting limit. If **either** CCV**s** fails, reanalyze it once. If it still fails, the instrument must be recalibrated and the previous samples since the last passing CCV**s**/CCB must be reanalyzed.

10.2.2.1 To meet the requirements of the DOD-QSM, the **concentration** of the analyte in the blank **must** be ≤ one-half the reporting limit.

11.0 Procedure

Documentation must follow the requirements in Quality Control SOP 13.6, "Proper Documentation Procedures".

11.1 Turn on the TOC-VCSH TOC analyzer.

11.2 Adjust the oxygen flow rate to 40 psi.

11.3 Verify that sample pH is < 2.

11.3.1 Samples that require dissolved organic carbon (DOC) analysis must be filtered through a 0.45 micron filter before analysis

11.4 Place the 40 mL vial containing the sample into the autosampler after thoroughly shaking the vial.

11.3 On the instrument's computer, open a new file in the TOC-Control V sample table. Select run, then TOC system. Save the file name and create a sample table.

11.3.1 View the ASI/8port sampler vials and insert samples (in the order that they are loaded onto the autosampler) into the sample table.

11.4 Upon completion of the analytical run, print and complete the Run Log (See Attachment 1).

12.0 Data Analysis and Calculations

Calculations must be consistent with the Quality Control SOP 13.6 "Numerical Data Reduction".

12.1 Calculation of the mean or average of a set of values:

$$\overline{X} = \frac{\sum_{i=1}^{n} X_i}{n}$$

where: n = total number of values
x_i = each individual value used to calculate the mean
x = the mean of n

12.2 Calculation of the standard deviation of a set of values:

$$\text{Standard deviation} = \sqrt{\frac{\sum_{i=1}^{n}\left(X_n - \overline{X}\right)^2}{n-1}}$$

12.3 Calculation of percent recovery:

12.3.1 LCS and surrogates:

$$\%R = \frac{Amount\ found}{Amount\ spiked}\ x\ 100$$

12.3.2 Matrix spikes:

$$\%\,\mathrm{R} = \frac{Amount\ in\ spiked\ sample\ -\ Amount\ in\ unspiked\ (native)\ sample}{Amount\ spiked}\ x\ 100$$

12.4 Calculation of % RSD

$$\%\mathrm{RSD} = \left(\frac{Standard\ deviation}{\overline{\mathrm{X}}}\right) \times 100$$

12.5 Calculation of RPD

$$RPD = \frac{|Value\ 1 - Value\ 2|}{(Value\ 1 + Value\ 2)/2} x100$$

12.6 Calculation of %Difference (%D)

$$\%Diff = \frac{Value - \overline{Reference\ value}}{\overline{Reference\ value}} x\ 100$$

12.7 Concentration

$$mg/L = \frac{peak\ area\ of\ sample}{peak\ area\ from\ standard} x\ concentration\ of\ standard$$

The TOC-VCSH TOC analyzer calculates the concentration of organic carbon automatically.

13.0 Method Performance

This method was validated through in-house laboratory studies of method detection limits and precision and accuracy for single analyst. The data are retained by the QA department.

14.0 Pollution Prevention

The solvents used in this procedure pose little threat to the environment when recycled and managed properly. Pollution prevention encompasses any technique that reduces or eliminates the quantity or toxicity of waste at the point of generation. Numerous opportunities for pollution prevention exist in laboratory operation. The EPA has established a preferred hierarchy of environmental management techniques that places pollution prevention as the management option of first choice. Whenever feasible, laboratory personnel should use pollution prevention techniques to address their waste generation. When wastes cannot be feasibly reduced at the source, the Agency recommends recycling as the next best thing.

15.0 Waste Management

It is the laboratory's responsibility to comply with all federal, state, and local regulations governing waste management, particularly the hazardous waste identification rules and land disposal restrictions, and to protect the air, water, and land by minimizing and controlling all releases from fume hoods and bench operations. Compliance with all

sewage discharge permits and regulations is also required. See SOP 12.1, Hazardous Waste Disposal, regarding laboratory procedures for recycling solvent waste streams.

Samples preserved with H_2SO_4 to pH <2 are hazardous and must be handled as hazardous waste.

Refer to the Hazardous Waste Management and Safety SOPs located in the lab.

16.0 References

16.1 Standard Methods for the Examination of Water and Wastewater, 20th Edition (1998), Method 1080 and Method 5310B.

16.2 "Test Methods for Evaluating Solid Wastes: Physical/Chemical Methods", SW-846, 3rd Edition, **9/86, Method 9060 and** Update III**B**, **11**/**04**, Method 9060**A**

16.3 Quality Control SOP 13.6, "Proper Documentation Procedures"

16.4 Quality Control SOP 13.4, "Numerical Data Reduction"

16.5 NELAC Standards, **effective** Ju**ly** 2003

16.6 EPA QA/G6: Guidance for Preparing Standard Operating Procedures (SOPs) EPA/600/B-07/001, April, 2007

16.7 CompuChem Quality Manual, Revision **12**, **August 3, 2009, plus revisions**

16.8 Department of Defense Quality Systems Manual for Environmental Laboratories, Final Version 3, January 2006

17.0 Attachments as Tables, Diagrams, and Flowcharts

17.1 TOC **Run L**og

17.2 Standards/QC Sample Preparation for TOC in Water

17.3 Example of Instrument Calibration Report

Attachment 1

TOC Run Log

Printed: 9/10/2009 4:47:35 PM

Analyst(s): _____ Analysis: TTL ORGNC CRBN (TOC) 9060 File Name: TOCW_2009_08_

Date/Time _____ Instrument: TOC Units: _____

SDG	Matrix	Comments
0908094	Water	

Batch
9082419

Cup	Sample ID	Client ID	Sample Type	DF	Date	Time	Results	Comments
2	ICAL	ICAL	CALIB STD	1.00	8/26/2009	3:03:47 PM	0.000	
67	ICAL	ICAL	CALIB STD	1.00	8/26/2009	3:12:23 PM	1.000	
68	ICAL	ICAL	CALIB STD	1.00	8/26/2009	3:21:19 PM	5.000	
68	ICAL	ICAL	CALIB STD	1.00	8/26/2009	3:28:39 PM	25.00	
68	ICAL	ICAL	CALIB STD	1.00	8/26/2009	3:35:41 PM	50.00	
68	ICAL	ICAL	CALIB STD	1.00	8/26/2009	3:42:22 PM	100.0	
4	ICV	ICV	ICV	1.00	8/26/2009	3:50:46 PM	76.95	
3	ICB	ICB	ICB	1.00	8/26/2009	4:00:15 PM	0.3898	
1	CCV	CCV	CCV	1.00	8/26/2009	4:09:04 PM	45.11	
2	CCB	CCB	CCB	1.00	8/26/2009	4:16:44 PM	0.6090	
3	9082419-BLK1	9082419-BLK1	BLANK	1.00	8/26/2009	4:24:08 PM	0.1352	
4	9082419-BS1	9082419-BS1	LCS	1.00	8/26/2009	4:32:55 PM	74.97	
4	9082419-BSD1	9082419-BSD1	LCS DUP	1.00	8/26/2009	4:38:40 PM	76.10	
5	0908094-01	SP11 081809	SAMPLE	1.00	8/26/2009	4:46:19 PM	0.9028	
6	0908094-02	SP2A 081809	SAMPLE	1.00	8/26/2009	4:53:51 PM	1.094	
7	0908094-03	SP10I 081809	SAMPLE	1.00	8/26/2009	5:01:08 PM	0.2227	
1	CCV	CCV	CCV	1.00	8/26/2009	5:09:56 PM	49.68	
2	CCB	CCB	CCB	1.00	8/26/2009	5:17:32 PM	0.5768	

The presence of the Chemist's/Analyst's employee ID number, or signature, on this run log attests that strict compliance with the method's SOP has occurred. Any SOP deviations require documentation by the responsible chemist/analyst together with the chemist's/analyst's initials and the initials of the lab supervisor and a QA department representative, signifying approval of the deviation.

Reviewed By: _____ Date: _____ Page 1 of 1

Attachment 2

Standards/QC Preparation for Total Organic Carbon (TOC) in Water

COMPUCHEM, a Division of Liberty Analytical Corporation WORKSHEET 1G(8) 1 Sequence Filename: _____

STANDARDS AND REAGENTS TRACEABILITY	*REF #:	MANUFACTURER	LOT#	EXPIRATION DATE
TOC Calibration Stock Standard (2000 ppm)	1U(6)1-14-4	NSI Solutions	021208	2/28/10
TOC 2nd Source Stock Standard (1000 ppm)	1U(6)1-13-15	Specpure	71-07-1098C	10/4/2009
Concentrated Phosphoric Acid (H_2PO_4)	1U(6) 1-14-10	Sigma-Aldrich	11917KD	8/31/11
Concentrated Sulfuric Acid (H_2SO_4)	1M2-182-3	Caledon	160220	3/11/10

REAGENT/STANDARD LOT NUMBER**	PREPARATION INSTRUCTIONS
Calibration Standard – 08 26 09 JM	A 100 ppm standard is prepared by diluting 0.5-mL of the TOC Calibration Stock standard to 50-mL of reagent water and adding approximately 100-µL of concentrated sulfuric as a preservative. Dilute to volume with reagent water. Prepare fresh each calibration day.
TOC-ICV/LCS – 08 26 09 JM (75 ppm)	Dilute 7.5-mL of the 1,000 ppm TOC 2nd Source Standard into a 100-mL volumetric flask.
TOC CCV – 08 26 09 JM (50ppm)	Dilute 1.25-mL of the TOC Calibration Stock standard into 50-mL of reagent water. Add approximately 100-µL of concentrated sulfuric as a preservative and dilute to volume with reagent water. Prepare fresh each calibration day.
TOC MS / MSDs 08 26 09 JM (yields 50ppm)	Add approximately 500-µL of TOC Calibration Stock standard into 20 mLs of the original qc sample

The presence of the Chemist's/Analyst's employee ID number, or signature, on this run log attests that strict compliance with the method's SOP has occurred. Any SOP deviations require documentation by the responsible chemist/analyst together with the chemist's/analyst's initials and the initials of the lab supervisor and a QA department representative, signifying approval of the deviation.

Standard Solutions Prepared and Entered By: _____ Date: _____

Reviewed By: _____ Date: _____

08/26/08: vr

ORIGINAL MASTER COPY CONTROLLED COPY
If the words above are not highlighted, this is an uncontrolled copy of this document.

CompuChem, a Division of Liberty Analytical Corporation

Attachment 3

TOC-V Cal Curve Information
TEST_TOC_CAL.2009_08_26_14_55_12.cal

Date of Creation 5:06:55 PM 4/20/2009
User
System TOC

Cal. Curve

Sample Name: TOC
Sample ID: CAL
Cal. Curve: TEST_TOC_CAL.2009_08_26_14_55_12.cal
Status Completed
Comment:

Type	Anal.
Standard	NPOC

Conc: 0.000mg/L

No.	Area	Inj. Vol.	Aut. Dil.	Rem.	Ex.	Date / Time
1	1.166	50uL	1	*******		8/26/2009 3:03:47 P

Acid Add. 0.000%
Sp. Time 90.00sec
Mean Area 1.166
SD Area 0.000
CV Area 0.00%
Vial 2

Conc: 1.000mg/L

No.	Area	Inj. Vol.	Aut. Dil.	Rem.	Ex.	Date / Time
1	7.896	50uL	10	*******		8/26/2009 3:12:23 P

Acid Add. 0.000%
Sp. Time 90.00sec
Mean Area 7.896
SD Area 0.000
CV Area 0.00%
Vial 67

Conc: 5.000mg/L

No.	Area	Inj. Vol.	Aut. Dil.	Rem.	Ex.	Date / Time
1	32.15	50uL	20	*******		8/26/2009 3:21:19 P

Acid Add. 0.000%
Sp. Time 90.00sec
Mean Area 32.15
SD Area 0.000
CV Area 0.00%
Vial 68

Conc: 25.00mg/L

No.	Area	Inj. Vol.	Aut. Dil.	Rem.	Ex.	Date / Time
1	171.5	50uL	4	*******		8/26/2009 3:28:39 P

1/2

Attachment 3 (Continued)

Acid Add.	0.000%
Sp. Time	90.00sec
Mean Area	171.5
SD Area	0.000
CV Area	0.00%
Vial	68

Conc: 50.00mg/L

No.	Area	Inj. Vol.	Aut. Dil.	Rem.	Ex.	Date / Time
1	345.7	50uL	2	*******		8/26/2009 3:35:41 P

Acid Add.	0.000%
Sp. Time	90.00sec
Mean Area	345.7
SD Area	0.000
CV Area	0.00%
Vial	68

Conc: 100.0mg/L

No.	Area	Inj. Vol.	Aut. Dil.	Rem.	Ex.	Date / Time
1	682.9	50uL	1	*******		8/26/2009 3:42:22 P

Acid Add.	0.000%
Sp. Time	90.00sec
Mean Area	682.9
SD Area	0.000
CV Area	0.00%
Vial	68

Slope:	6.837
Intercept	0.000
r^2	0.999944
r	0.999972
Zero Shift	Yes

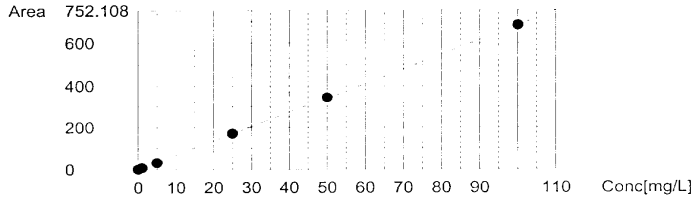

2/2

CompuChem
A Division Of
Liberty Analytical Corp.

501 Madison Avenue
Cary, NC 27513

NELAP accredited

SOP DOCUMENTATION FORM

This form must accompany all new and revised Standard Operating Procedures (SOPs) when you turn them in to Quality Assurance for review. Please fill out the entire block below (except effective date).

This is a new procedure _____ revised procedure ✓ outdated procedure (archive) _____

- Procedure Code: IP 802 and 809 SOP Section #: 3.6.2.2 Revision #: 15

SOP Title: Analysis of Soil Samples for Total Organic Carbon (TOC) by SW-846 Method 9060A, Modified for Soils and Lloyd Kahn

Effective date: (QA fills in) 10-30-2009

- Procedure prepared by: _____ Date: 10-06-2009
- Procedure approved by: (If the manager prepared the SOP, a qualified second party should sign) _____ Date: 10/30/09
- Reason for change: Updated standard information and revised QC limits for DOD
- This procedure meets the requirements of the following approved method references: SW-846 3rd Edition, Update III B, 11/04, Method 9060A, modified for soils and Lloyd Kahn Method, "Determination of Total Organic Carbon in Sediment," July 1988, Modified for Soil

Procedure approved by a QA Representative (unless QA Representative signed above):

_____ Date: _____

On an annual basis: Lab managers are required to review lab practices and revise the SOP if necessary. If no revision is necessary, indicate by your signature that the SOP has been reviewed.

Annual Review—Signature: _____ Date: _____

Annual Review—Signature: _____ Date: _____

Annual Review—Signature: _____ Date: _____

Annual Review—Signature: _____ Date: _____

Instrument Procedure 802 and 809: Analysis of Soil Samples for Total Organic Carbon (TOC) by SW-846 **Method 9060A, modified for Soils,** and Lloyd Kahn

Table of Contents

SECTION	PAGE NO.
Section 1.0 – Scope and Application	2
Section 2.0 – Summary of Method	2
Section 3.0 – Definitions	**3**
Section 4.0 – Interferences	**4**
Section 5.0 – Safety	**4**
Section 6.0 – Equipment and Supplies	**4**
Section 7.0 – Reagents and Standards	**5-6**
Section 8.0 - Sample Preservation and Storage	**6**
Section 9.0 – Quality Control	**6-7**
Section 10.0 – Calibration and Standardization	**7-8**
Section 11.0 – Procedure	**9-10**
Section 12.0 – Data Analysis and Calculations	**10-11**
Section 13.0 – Method Performance	1**1**
Section 14.0 – Pollution Prevention	1**1**
Section 15.0 – Waste Management	**12**
Section 16.0 – References	1**2**
Section 17.0 – Attachments as Tables, Diagrams, and Flowcharts	1**2**
Attachment 1	1**3**
Attachment 2	**14-15**

Instrument Procedure 802 and 809: Analysis of Soil Samples for Total Organic Carbon (TOC) by SW-846 **Method 9060A, modified for Soils,** and Lloyd Kahn

1.0 Scope and Application

Soil and sediment samples are analyzed using the SSM-5000A Solid Sample Module that is interfaced with the TOC-VCSH analyzer. The instrument converts any organic carbon to carbon dioxide (CO_2) by catalytic combustion. The carbon dioxide is measured directly with a non-dispersive infrared detector.

A reporting limit of 100 mg/Kg is required for the Lloyd Kahn method.

Staff members performing the procedures described in this SOP are responsible for reading, understanding, and complying with the SOP requirements. Supervisors are responsible for directing the analyst to the controlled SOP, and providing adequate explanation of the material contained therein.

This procedure is restricted to use by or under the supervision of analysts experienced in the instrumentation or preparative methods and who have demonstrated the ability to generate acceptable results through QC samples and analyst capability studies.

2.0 Summary

TOC in soil is composed of a variety of organic compounds in various oxidation states. A high temperature combustion method is used to measure TOC in soil. The sample is acidified to remove inorganic carbon, and introduced to a combustion oven (900°C) where all carbonaceous matter is oxidized to carbon dioxide. The carbon dioxide is bubbled through an acidified liquid and then routed through a mist trap to remove water and scrub out any corrosive species formed. The gas is swept to a non-dispersive infrared detector which is specific for carbon dioxide measurement.

For the Lloyd Kahn method, one sample in a 20 sample batch is analyzed in quadruplicate. Quadruplicate analyses are required by **Method 9060A. Perform quadruplicate analyses** unless instructed otherwise by the client. When run in quadruplicate, both the average and the range are reported.

3.0 Definitions

3.1 Method detection limit (MDL) – The minimum concentration of an analyte that can be measured and reported with 99% confidence that the analyte concentration is greater than zero and is determined from analysis of a sample in a given matrix containing the analyte (40 CFR, Part 136, Appendix B.)

3.2 Reporting Limit – The laboratory reporting limit is based on the lowest multipoint calibration standard concentration **The RL is subject to change, but must remain at or above the lowest non-zero point in the calibration. Any elevation of the reporting limit must be discussed with the project manager to ensure compliance with client requirements. For organic methods, values detected below the reporting limit and above the MDL may be reported and qualified as an estimated concentration. A reporting limit of 100 mg/Kg is required for the Lloyd Kahn method.**

3.3 Reporting Units – mg/Kg

3.4 An SDG is defined by the following, whichever is more frequent:

- each 20 field samples received within a case, or
- each 7 calendar day period during which field samples in a case are received (14 calendar days if requested by the client) beginning with the receipt of the first sample.

NOTE: The **DoD**-QSM and SC DHEC do not accept the SDG approach, unless the samples are prepared in a single batch. When a group of up to 20 field samples of a similar matrix are prepared as one batch, method-specified QC samples such as a method blank, laboratory control sample, matrix spike, matrix spike duplicate, and matrix duplicate must also be prepared together **at a rate of 5% for DoD-QSM.** If samples are batched together from different sites, project-specific QC must be processed.

3.5 **DoD**-QSM – Department of Defense Quality Systems Manual

3.6 SC DHEC – South Carolina Department of Health and Environmental Control

4.0 Interferences

4.1 Volatile organics can be lost during sample blending, particularly if temperature is allowed to rise.

4.2 Avoid contaminated glassware, plastic containers, and rubber tubing.

5.0 Safety

Appropriate protective equipment and clothing must be used under the assumption that all samples are potentially hazardous. Safety glasses, gloves and lab coats are a minimum requirement. The persistent presence of noxious odors may be indicative of failure of the laboratory ventilation system and must be reported to a supervisor or manager.

Laboratory staff must review the Chemical Hygiene Plan for general safety policies, and Material Safety Data Sheets for reagents used in the laboratory.

6.0 Equipment & Supplies

6.1 Total organic analyzer-- Shimadzu, TOC-VCSH, model # H51104335168

6.1.1 Automatic sample injector - ASI-V, model # H52104301622

6.1.2 Solid Sample Module – SMM-5000A, model # H525043

6.2 Analytical balance capable of weighing to 0.001g for weighing samples and preparation of standards

6.3 Glassware – Prepare by handwashing with a non-phosphate biodegradable detergent, then rinsing three times with DI water.

6.3.1 100 **mL** volumetric flasks

6.3.2 Volumetric pipettes

7.0 Reagents and Standards

Standards and reagent traceability information must be documented on the Standards/QC Sample Preparation for TOC Soil log sheet. (Attachment **1**)

Note: All standards and reagents are subject to change in vendor and in concentration. The Reporting Limits are also subject to change, but must remain at or above the lowest point in the calibration.

7.1 Reagent Water-All water used during preparation **must** be reagent-grade Type I with regard to resistivity of > 10 megohm-cm (18th and 19th Editions of Standard Methods, Method 1080), and referred throughout this SOP as **DI water**.

7.2 Carrier gas: purified oxygen, carbon dioxide free, and containing less than 1 ppm hydrocarbon.

7.3 Quartz Wool (Used as soil media for standards and instrument blank)

7.4 Sulfuric acid (20%)-reagent grade – Cautiously add 200 ml of concentrated sulfuric acid to a one liter volumetric containing approximately 500 mL DI water. After cooling, dilute to the mark with DI water. This solution is used to prepare the calibration standards.

7.5 Phosphoric acid – 1:1 by volume solution used for Lloyd Kahn procedure

7.6 10,000 ppm Stock Calibration Standard

7.6.1 Potassium hydrogen phthalate (KHP), reagent grade, 10,000 ppm. This aqueous standard is purchased from Tekmar-Dohrman and is used as the primary stock standard.

7.7 **10**,000 ppm **Second Source Stock Standard used for the** Initial Calibration Verification (ICV) **and the Laboratory Control Sample (LCS).**

7.7.1 The ICV (6000 ppm) is prepared by adding 60 uL of the Second Source Stock Standard (10,000ppm) to a sample boat containing a portion of quarts wool.

7.7.**2** **The LCS (6000 ppm) is prepared at by adding 60 uL of the Second Source Stock Standard (10,000ppm) to a sample boat containing a portion of quarts wool.**

7.8 5,000 ppm Continuing Calibration Verification (CCV) Standard

7.8.1 The concentration of the continuing calibration standard is 5,000 ppm. This standard is prepared by adding 50 µL of the 10,000 ppm stock standard to a sample boat containing a **of** portion quarts wool.

7.**9** Matrix Spike

7.**9**.1 The matrix spike and matrix spike duplicate (MS/MSD) are spiked using the 10,000 ppm stock standard. Based upon the results of the original un-spiked sample, the MS/MSD samples are then spiked at 1 to 5 times the sample concentration.

8.0 Sample Preservation and Storage

8.1 Samples are preserved, and stored according to the tables in Sample Control SOP 4.1, "Receiving Samples" and 4.6, "Storing Samples." Sample holding times are also listed.

8.2 Soil samples are not preserved. They **must be** refrigerated at **4°C ± 2°C** in amber glass containers with TFE lined caps. Samples must be analyzed within 28 days of sampling.

9.0 Quality Control

9.1 The ICV is run immediately after the instrument is calibrated with a separate source KHP standard. Acceptance criteria are ± 10% of the true value.

9.1.1 If the ICV fails, reanalyze. If it still fails, re-calibrate and reanalyze.

9.2 An initial calibration blank (ICB) is run after the ICV. This result must not be greater than the reporting limit. If the result is above the reporting limit, repeat the calibration.

9.2.1 To meet the requirements of the DoD-QSM, the concentration of the analyte in the blank must be < one-half the reporting limit.

9.3 The method blank or preparation blank (PB) is prepared with each batch of not more than 20 field samples. The results of the method blank must not exceed the

reporting limit. If the result is above the reporting limit, reanalyze the blank. If the result is still above the reporting limit, recalibrate and reanalyze.

9.3.1 The **DoD**-QSM requires that the content of the method blank must be less than one-half of the reporting limit.

9.4 The LCS is prepared with each preparation batch of not more than 20 field samples. The recovery in the LCS must be within ± 10% of the true value. If the LCS fails reanalyze. If is still fails, recalibrate and reanalyze the entire batch.

9.5 A CCV and continuing calibration blank (CCB) are run after every 10 samples and at the end of the sequence. Acceptance criteria are the same as the ICV/ICB. If the CCV or CCB fails, the previous 10 samples must be reanalyzed.

9.6 A MS/MSD are prepared (if requested by the client) in a batch of not more than 20 field samples. The spike recovery should be between 75 and 125% and a relative percent difference should be $\leq$ 20%. If the duplicate matrix spike acceptance criteria are not met, but the LCS is acceptable, a sample matrix effect is indicated and the batch is in control.

10.0 Calibration and Standardization

10.1 Prepare the sample boat for analysis by heating it in the TC furnace of the Shimadzu, TOC-VCSH TOC analyzer at 900 °C for 20 minutes.

10.2 Calibrate the instrument at five levels using the 10,000 ppm **Stock Standard Solution (Section 7.6).**.

10.2.1 Create a calibration curve by selecting “new calibration curve” on the instruments PC.

10.2.2 Select the “ssm system” (soil sample module)

10.2.3 Select “edit cal points manually”.

10.2.4 Name your calibration curve and select “linear regression”

10.2.5 Using Quartz Wool as the soil matrix for the standards, analyze the calibration curve at 0 (ICB), 25, 50, 75, and 100 **uL of the 10,000 ppm Stock Solution (Section 7.6)**.

10.3 A correlation coefficient of ≥ 0.995 must be achieved in order for the calibration to be acceptable**. (See Attachment 3 for an example Calibration Curve)**

10.4 Verifying the Calibration

10.4.1 The initial calibration is verified by analyzing the 6000 ppm ICV standard and a blank or ICB. The ICV results must be within ± 10% of the true value and the ICB < the reporting limit. If the ICV fails, re-analyze. If the re-analysis, analyze a new initial calibration.

10.4.1.1 To meet the requirements of the DoD-QSM, the concentration of the analyte in the blank must be < one-half the reporting limit.

10.4.2 A 5000 ppm continuing calibration verification (CCV) standard and a continuing calibration blank (CCB) are analyzed, after every 10 samples, and at the end of the analytical sequence. The results of the CCV must be within ± 10% of the true value and the CCB < the reporting limit. If the CCV fails, reanalyze it once. If it still fails, the instrument must be recalibrated and the previous samples since the last passing CCV/CCB must be reanalyzed.

10.5 To meet the requirements of the DoD-QSM, the concentration of the analyte in the blank must be < one-half the reporting limit.

10.**6** Refer to the TOC-V Series SSM-5000A "Solid Sample Module for Total Organic Carbon Analyzer" Users Manual for instrument operation instructions for calibration.

10.**7** Pipette Calibration

10.**7**.1 Ensure pipettes have been calibrated at the required frequency before use according to Inorganics SOP 9.1, "Calibrating Automatic Pipettes in the Inorganics Laboratory."

10.**8** Balance Calibration

10.**8**.1 Ensure the balance has been calibrated for the day prior to use following Quality Control SOP 13.17, "Analytical Balance Calibration and Maintenance."

11.0 Procedure

Documentation must follow the requirements in Quality Control SOP 13.6, "Proper Documentation Procedures."

11.1 Discard any foreign objects such as sticks, stones, and leaves. Thoroughly mix the sample, reducing any clumps, with a metal spatula in a plastic weighing boat to create a homogeneous, representative sample.

11.2 Prepare the sample boat using the procedure in section 10.1. Remove the sample boat; add a tuft of quartz wool, then place it on the analytical balance. Tare the balance and transfer 10 to 20 mg of soil sample to the boat.

11.3 Add one drop of 20% sulfuric acid to the top of the sample in the boat. For Lloyd Kahn samples, add 1:1 phosphoric acid. Allow the sample to stand at room temperature for 3-5 minutes or until effervescence ceases.

11.4 Place the sample boat into the hatch port. Close the hatch, and allow the detector baseline to stabilize. Press "run." Enter the sample ID, press enter. Enter the sample weight in mg, and press "start."

11.5 Slowly push the boat into the combustion tube during the period "inject now." When the run is complete, pull the boat to the cooling position..

11.6 After completion of the integration, select "next" for the next sample and repeat steps 11.2 through 11.6.

11.6.1 One in twenty Lloyd Kahn samples is analyzed in quadruplicate. **Both the average and the range are reported.** A RSD of 20% must be achieved for quad samples or the analysis must be repeated.

11.6.2 Method 9060**A** requires samples to be analyzed in quadruplicate**. Both the average and the range are reported.**

11.6.3 Perform quadruplicate analyses unless instructed otherwise by the client. Both the average and the range are reported.

11.7 Refer to the TOC-V Series SSM-5000A "Solid Sample Module for Total Organic Carbon Analyzer" users manual for instrument operation instructions for sample analysis.

11.8 Calculating Dilutions

11.8.1 Determine a level of dilution that will result in a value within the upper half of the calibration range. This is an acceptable dilution.

11.8.2 For example, 7.0 mg silica gel mixed with 2.9 mg sample yields a dilution factor of 3.41. A 10 mg aliquot of this mixture is transferred to the boat. It should be recorded on the run log as "3.41x (7.0 mg silica gel + 2.9 mg sample)."

12.0 Data Analysis and Calculations

Calculations must be consistent with the Quality Control SOP13.4, "Numerical Data Reduction."

12.1 The Shimadzu, TOC-VCSH TOC Analyzer automatically calculates the concentration of organic carbon. When carbon is detected, an electronic peak is generated and integrated by the Shimadzu, TOC-VCSH computer where its area is calculated. The computer then plots the area of the peak on the calibration curve.

12.4 Calculation of the mean or average of a set of values:

$$\overline{X} = \frac{\sum_{i=1}^{n} X_i}{n}$$

where: n = total number of values
x_i = each individual value used to calculate the mean
x = the mean of n

12.5 Calculation of the standard deviation of a set of values:

$$Standard\ deviation = \sqrt{\frac{\sum_{i=1}^{n}\left(X_n - \overline{X}\right)^2}{n-1}}$$

12.6 Calculation of percent recovery:

12.6.1 LCS:

$$\%R = \frac{Amount\ found}{Amount\ spiked}\ x\ 100$$

12.6.2 Matrix spikes:

$$\%\ R = \frac{Amount\ in\ spiked\ sample - Amount\ in\ unspiked\ (native)\ sample}{Amount\ spiked}\ x\ 100$$

12.7 Calculation of % RSD

$$\%RSD = \left(\frac{Standard\ deviation}{\overline{X}}\right) \times 100$$

12.8 Calculation of RPD

$$RPD = \frac{|Value\ 1\ -\ Value\ 2|}{(Value\ 1\ +\ Value\ 2)/2}\ x100$$

13.0 Method Performance

This method was validated through in-house laboratory studies of method detection limits and precision and accuracy for single analyst. The data are retained by the QA department.

14.0 Pollution Prevention

The solvents used in this procedure pose little threat to the environment when recycled and managed properly. Pollution prevention encompasses any technique that reduces or eliminates the quantity or toxicity of waste at the point of generation. Numerous opportunities for pollution prevention exist in laboratory operation. The EPA has established a preferred hierarchy of environmental management techniques that places pollution prevention as the management option of first choice. Whenever feasible, laboratory personnel should use pollution prevention techniques to address their waste generation. When wastes cannot be feasibly reduced at the source, the Agency recommends recycling as the next best thing. See SOP 12.1, Hazardous Waste Disposal, regarding laboratory procedures for recycling solvent waste streams.

15.0 Waste Management

It is the laboratory's responsibility to comply with all federal, state, and local regulations governing waste management, particularly the hazardous waste identification rules and land disposal restrictions, and to protect the air, water, and land by minimizing and controlling all releases from fume hoods and bench operations. Compliance with all sewage discharge permits and regulations is also required.

Samples preserved with H_2SO_4 to pH <2 are hazardous and must be neutralized before being disposed, or must be handled as hazardous waste.

Refer to the Hazardous Waste Management and Safety SOPs located in the lab.

16.0 References

16.1 Test Methods for Evaluating Solid Waste, Physical/Chemical Methods, SW-846; 3rd Edition, **Update IIIB, 11/04, Method 9060A**, modified for soils, based on the TOC-V Series SSM-5000A "Solid Sample Module for Total Organic Carbon Analyzer" Users Manual.

16.2 Quality Control SOP, 13.6 "Proper Documentation Procedures"

16.3 Quality Control SOP, 13.4 "Numerical Data Reduction"

16.4 **NELAC Standards, effective July 2003**

16.5 QA/G6: Guidance for Preparing Standard Operating Procedures (SOPs) EPA/600/B-07/001, April 2007.

16.6 CompuChem Quality Manual, **Revision 12, August 3, 2009, plus revisions**

16.7 Lloyd Kahn Method, "Determination of Total Organic Carbon in Sediment," July 1988, modified for soils

17.0 Attachments as Tables, Diagrams, and Flowcharts

17.1 Standards/QC Sample Preparation for TOC Log

17.2 Example Calibration Curve

Attachment 1

Standards/QC Preparation for TOC Soil File Seq. Name: _____

COMPUCHEM a division of Liberty Analytical Corp WORKSHEET 1 H (8)

STANDARDS AND REAGENTS TRACEABILITY*	**REF #:**
TOC Stock 10,000 ppm Standard	1U(6) 1-11-3
TOC (Second Source) 10,000 ppm Standard	1U96)14-2
TOC Check 2,000 ppm (Second Source) Standard	1U(6)1-14-4
Conc.: H2SO4	1M2-182-3
Conc.: H3PO4 (LLOYD KAHN)	1U(6)1-14-10
REAGENT/STANDARD LOT NUMBER**	**PREPARATION INSTRUCTIONS**
H2SO4 Acid (20%) 08 11 09 jm	Add 20ml H2S04 to 80ml H2O
H3P04 Acid (50%) – 08 14 09 jm	Add 20 mL H2O and of concentrated sulfuric acid to a 40ml vial.
6,000 ppm ICV – 08 14 09 jm	1U(6)1-14-4
LCS Std 6,000 ppm. – 08 14 09 jm (Second Source)	1U(6)1-11-3
MS/MSD = 15,789 ppm 08 14 09 jm	TOC Stock 10,000 ppm Standard / sample weight(mg) x volume(uL) of spike solution = MS/MSD True value
5,000 ppm CCV . – 08 11 09 jm	Dilute 10 mL of the 10,000-ppm stock standard in a 100 mL volumetric flask with DI water. Prepare fresh monthly.

Standard Solutions Prepared By: _____ Date: _____

Reviewed By: _____ Date: _____

*Ref# = Logbook ID, Page number, and item number from Materials Receipt Log

**Standard Lot Number consists of standard ID, date prepared, and initials of preparer.

The presence of the Chemist's/Analyst's employee ID number, or signature, on this run log attests that strict compliance with the method's SOP has occurred. Any SOP deviations require documentation by the responsible chemist/analyst together with the chemist's/analyst's initials and the initials of the lab supervisor and a QA department representative, signifying approval of the deviation.

10/2/06:jad

Attachment 2

TOC-V Cal Curve Information
SSMCAL.2009_08_14_10_49_52.cal

Date of Creation	3:29:38 PM 8/15/2006
User	
System	SSM

Cal. Curve

Sample Name:	CAL
Sample ID:	10000
Cal. Curve:	SSMCAL.2009_08_14_10_49_52.cal
Status	Completed
Comment:	

Type	Anal.	Density
Standard	SSM-TC	1.000mg/uL

AbsC: 0.000ug

No.	Area	CNV	Abs C	Weight	Volume	Rem.	Ex.	Date / Time
1	0.000	0.000	0.000ug	0.000mg	0uL	*******		8/14/2009 11:29:51

Mean Area	0.000
Mean CNV	0.000
SD Area	0.000
CV Area	0.00%

AbsC: 250.0ug

No.	Area	CNV	Abs C	Weight	Volume	Rem.	Ex.	Date / Time
1	27.12	27.12	250.0ug	25.00mg	25uL	*******		8/14/2009 11:42:03

Mean Area	27.12
Mean CNV	27.12
SD Area	0.000
CV Area	0.00%

AbsC: 500.0ug

No.	Area	CNV	Abs C	Weight	Volume	Rem.	Ex.	Date / Time
1	53.60	53.60	500.0ug	50.00mg	50uL	*******		8/14/2009 11:54:27

Mean Area	53.60
Mean CNV	53.60
SD Area	0.000
CV Area	0.00%

AbsC: 750.0ug

No.	Area	CNV	Abs C	Weight	Volume	Rem.	Ex.	Date / Time
1	78.25	78.25	750.0ug	75.00mg	75uL	*******		8/14/2009 12:09:15

Mean Area	78.25
Mean CNV	78.25
SD Area	0.000
CV Area	0.00%

1/2

Attachment 2 (Continued)

AbsC: 1000ug

No.	Area	CNV	Abs C	Weight	Volume	Rem.	Ex.	Date / Time
1	105.9	105.9	1000ug	100.0mg	100uL	*******		8/14/2009 12:25:22 I

Mean Area	105.9
Mean CNV	105.9
SD Area	0.000
CV Area	0.00%

Slope:	0.1052
Intercept	0.000
r^2	0.999727
r	0.999864
Zero Shift	Yes

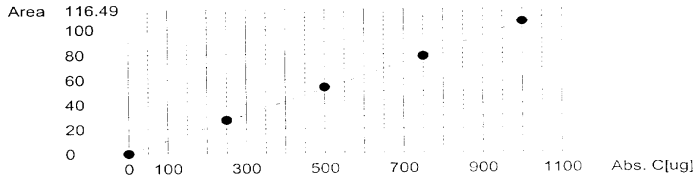

2/2

Analyte	CAS Number	EPA Method	Solid Accuracy % Recovery	Aqueous Accuracy % Recovery	Solid Precision RPD	Aqueous Precision RPD	Solid LOQ	Solid LOD	Solid DL	Solid LOQ	Solid LOD	Solid DL	Aqueous LOQ	Aqueous LOD	Aqueous DL
Volatile Organic Compounds							(mg/kg)	(mg/kg)	(mg/kg)	(ug/kg)	(ug/Kg)	(ug/Kg)	(µg/L)	(µg/L)	(µg/L)
1,1,1-Trichloroethane	71-55-6	8260B	70-135	65-130	≤30	≤30									
1,1,1,2-Tetrachloroethane	630-20-6	8260B	75-125	80-130	≤30	≤30									
1,1,2,2-Tetrachloroethane	79-34-5	8260B	55-130	65-130	≤30	≤30									
1,1,2-Trichloroethane	79-00-5	8260B	60-125	75-125	≤30	≤30									
1,1,2-Trichloro-1,2,2-trifluoroethane	76-13-1	8260B	50-150	78-150	≤30	≤30									
1,2,3-Trichloropropane	96-18-4	8260B	65-130	75-125	≤30	≤30									
1,1-Dichloroethane	75-34-3	8260B	75-125	70-135	≤30	≤30									
1,1-Dichloroethene	75-35-4	8260B	65-135	70-130	≤30	≤30									
1,2-Dibromo-3-chloropropane	96-12-8	8260B	40-135	50-130	≤30	≤30									
1,2-Dibromoethane	106-93-4	8260B	70-125	80-120	≤30	≤30									
1,2-Dichlorobenzene	95-50-1	8260B	75-120	70-120	≤30	≤30									
1,2-Dichloroethane	107-06-2	8260B	70-135	70-130	≤30	≤30									
1,2-Dichloropropane	78-87-5	8260B	70-120	75-125	≤30	≤30									
1,2,4-Trichlorobenzene	120-82-1	8260B	65-130	75-130	≤30	≤30									
1,3-Dicholorobenzene	541-73-1	8260B	70-125	75-125	≤30	≤30									
1,4-Dichlorobenzene	106-46-7	8260B	70-125	75-125	≤30	≤30									
1,4-Dioxane	123-91-1	8260B	50-150	50-150	≤30	≤30									
2-Butanone (MEK)	78-93-3	8260B	30-160	30-150	≤30	≤30									
2-Chloro-1,3-butadiene (Chloroprene)	126-99-8	8260B	50-150	50-150	≤30	≤30									
2-Hexanone	591-78-6	8260B	45-145	55-130	≤30	≤30									
4-Methyl-2-pentanone (MIBK)	108-10-1	8260B	45-130	60-135	≤30	≤30									
Acetone	67-64-1	8260B	20-160	40-140	≤30	≤30									
Acetonitrile	75-05-8	8260B	50-150	50-150	≤30	≤30									
Acrolein	107-02-8	8260B	50-150	50-150	≤30	≤30									
Acrylonitrile	107-13-1	8260B	50-150	50-150	≤30	≤30									
Allyl chloride (3-chloro-1-propene)	107-18-6	8260B	50-150	50-150	≤30	≤30									
Benzene	71-43-2	8260B	75-125	80-120	≤30	≤30									
Bromodichloromethane	75-27-4	8260B	70-130	75-120	≤30	≤30									
Bromoform	75-25-2	8260B	55-135	70-130	≤30	≤30									
Bromomethane	74-83-9	8260B	30-160	30-145	≤30	≤30									
Carbon disulfide	75-15-0	8260B	45-160	35-160	≤30	≤30									
Carbon tetrachloride	56-23-5	8260B	65-135	65-140	≤30	≤30									
Chlorobenzene	108-90-7	8260B	75-125	80-120	≤30	≤30									
Chloroethane	75-00-3	8260B	40-155	30-135	≤30	≤30									
Chloroform	67-66-3	8260B	70-125	65-135	≤30	≤30									
Chloromethane	74-87-3	8260B	50-130	40-125	≤30	≤30									
Cyclohexane	110-82-7	8260B	50-150	50-150	≤30	≤30									
cis-1,2-Dichloroethene	156-59-2	8260B	65-125	70-125	≤30	≤30									
cis-1,3-Dichloropropene	10061-01-5	8260B	70-125	70-130	≤30	≤30									
Dibromochloromethane	124-48-1	8260B	65-130	60-135	≤30	≤30									
Dibromomethane	74-95-3	8260B	75-130	75-125	≤30	≤30									
Dichlorodifluoromethane	75-71-8	8260B	35-135	30-155	≤30	≤30									
Ethylbenzene	100-41-4	8260B	75-125	75-125	≤30	≤30									
Ethyl methacrylate	97-63-2	8260B	50-150	50-150	≤30	≤30									
Isobutanol	78-83-1	8260B	50-150	50-150	≤30	≤30									
Isopropylbenzene	98-82-8	8260B	75-130	75-125	≤30	≤30									

Analyte	CAS Number	EPA Method	Solid Accuracy % Recovery	Aqueous Accuracy % Recovery	Solid Precision RPD	Aqueous Precision RPD	Solid LOQ	Solid LOD	Solid DL	Solid LOQ	Solid LOD	Solid DL	Aqueous LOQ	Aqueous LOD	Aqueous DL
Volatile Organic Compounds							(mg/kg)	(mg/kg)	(mg/kg)	(ug/kg)	(ug/Kg)	(ug/Kg)	(µg/L)	(µg/L)	(µg/L)
Methacrylonitrile	126-98-7	8260B	50-150	50-150	≤30	≤30									
Methyl acetate	79-20-9	8260B	50-150	50-150	≤30	≤30									
Methylcyclohexane	108-87-2	8260B	50-150	50-150	≤30	≤30									
Methylene chloride	75-09-2	8260B	55-140	55-140	≤30	≤30									
Methyl iodide	74-88-4	8260B	50-150	50-150	≤30	≤30									
Methyl methacrylate	80-62-6	8260B	50-150	50-150	≤30	≤30									
Methyl-tert-butyl ether (MTBE)	1634-04-4	8260B	50-150	65-125	≤30	≤30									
Pentachloroethane	76-01-7	8260B	50-150	50-150	≤30	≤30									
Propionitrile	107-12-0	8260B	50-150	50-150	≤30	≤30									
Styrene	100-42-5	8260B	75-125	65-135	≤30	≤30									
Tetrachloroethene	127-18-4	8260B	65-140	45-150	≤30	≤30									
Toluene	108-88-3	8260B	70-125	75-120	≤30	≤30									
trans-1,2-Dichloroethene	156-60-5	8260B	65-135	60-140	≤30	≤30									
trans-1,3-Dichloropropene	10061-02-6	8260B	65-125	55-140	≤30	≤30									
trans-1,4-Dichloro-2-butene	110-57-6	8260B	50-150	50-150	≤30	≤30									
Trichloroethene	79-01-6	8260B	75-125	70-125	≤30	≤30									
Trichlorofluoromethane	75-69-4	8260B	25-185	60-145	≤30	≤30									
Vinyl acetate	108-05-4	8260B	50-150	50-150	≤30	≤30									
Vinyl chloride	75-01-4	8260B	60-125	50-145	≤30	≤30									
Total Xylenes	1330-20-7	8260B	50-150	50-150	≤30	≤30									
Xylene, Meta + Para	108-38-3	8260B	80-125	75-130	≤30	≤30									
Xylene, Ortho	95-47-6	8260B	75-125	80-120	≤30	≤30									
Surrogates							(mg/kg)	(mg/kg)	(mg/kg)	(ug/kg)	(ug/Kg)	(ug/Kg)	(µg/L)	(µg/L)	(µg/L)
1,2-Dichloroethane-d4	95-50-1	8260B	70-139	70-120	n.a.	n.a.	n.a.		n.a.				n.a.		n.a.
4-Bromofluorobenzene	460-00-4	8260B	85-120	75-120	n.a.	n.a.	n.a.		n.a.				n.a.		n.a.
Dibromofluoromethane	1686-53-7	8260B	71-141	85-115	n.a.	n.a.	n.a.		n.a.				n.a.		n.a.
Toluene-d8	2037-26-5	8260B	85-115	85-120	n.a.	n.a.	n.a.		n.a.				n.a.		n.a.
Semivolatile Organic Compounds							(mg/kg)	(mg/kg)	(mg/kg)	(ug/kg)	(ug/Kg)	(ug/Kg)	(µg/L)	(µg/L)	(µg/L)
1,1'-Biphenyl	92-52-4	8270C	42-116	49-109	≤30	≤30									
1,2,4,5-Tetrachlorobenzene	95-94-3	8270C	20-150	20-150	≤30	≤30									
1,2,4-Trichlorobenzene	120-82-1	8270C	45-110	35-150	≤30	≤30									
1,2-Dichlorobenzene	95-50-1	8270C	45-95	35-100	≤30	≤30									
1,3-Dichlorobenzene	541-73-1	8270C	40-100	30-100	≤30	≤30									
1,4-Dichlorobenzene	106-46-7	8270C	35-105	30-110	≤30	≤30									
1,4-Naphthoquinone	130-15-4	8270C	20-150	20-150	≤30	≤30									
1,4-Phenylenediamine	106-50-3	8270C	20-150	20-150	≤30	≤30									
1-Naphthylamine	134-32-7	8270C	20-150	20-150	≤30	≤30									
2,3,4,6-Tetrachlorophenol	58-90-2	8270C	20-150	20-150	≤30	≤30									
2,4,5-Trichlorophenol	95-95-4	8270C	50-110	50-110	≤30	≤30									
2,4,6-Trichlorophenol	88-06-2	8270C	50-115	50-115	≤30	≤30									
2,4-Dichlorophenol	120-83-2	8270C	45-110	50-105	≤30	≤30									
2,4-Dimethylphenol	105-67-9	8270C	30-105	30-110	≤30	≤30									
2,4-Dinitrophenol	51-28-5	8270C	15-130	14-140	≤30	≤30									

Analyte	CAS Number	EPA Method	Solid Accuracy % Recovery	Aqueous Accuracy % Recovery	Solid Precision RPD	Aqueous Precision RPD	Solid LOQ	Solid LOD	Solid DL	Solid LOQ	Solid LOD	Solid DL	Aqueous LOQ	Aqueous LOD	Aqueous DL
Volatile Organic Compounds							(mg/kg)	(mg/kg)	(mg/kg)	(ug/kg)	(ug/Kg)	(ug/Kg)	(µg/L)	(µg/L)	(µg/L)
2,4-Dinitrotoluene	121-14-2	8270C	50-115	20-120	≤30	≤30									
2,6-Dichlorophenol	87-65-0	8270C	20-150	20-150	≤30	≤30									
2,6-Dinitrotoluene	606-20-2	8270C	50-115	50-115	≤30	≤30									
2-Acetylaminofluorene	53-96-3	8270C	20-150	20-150	≤30	≤30									
2-Chloronaphthalene	91-58-7	8270C	50-105	50-105	≤30	≤30									
2-Chlorophenol	95-57-8	8270C	45-105	35-105	≤30	≤30									
2-Methylnaphthalene	91-57-6	8270C	45-105	45-105	≤30	≤30									
2-Methylphenol	95-48-7	8270C	40-105	40-110	≤30	≤30									
2-Naphthylamine	91-59-8	8270C	20-150	20-150	≤30	≤30									
2-Nitroaniline	88-74-4	8270C	50-115	50-115	≤30	≤30									
2-Nitrophenol	88-75-5	8270C	40-110	40-115	≤30	≤30									
2-Picoline	109-06-8	8270C	20-150	20-150	≤30	≤30									
3,3'-Dichlorobenzidine	91-94-1	8270C	10-130	20-110	≤30	≤30									
3,3'-Dimethylbenzidine	119-93-7	8270C	20-150	20-150	≤30	≤30									
3-Methylcholanthrene	56-49-5	8270C	20-150	20-150	≤30	≤30									
3-Methylphenol(3)	108-39-4	8270C	40-105	30-110	≤30	≤30									
4-Methylphenol(3)	106-44-5	8270C	40-105	30-110	≤30	≤30									
3-Nitroaniline	99-09-2	8270C	20-125	20-125	≤30	≤30									
4,6-Dinitro-2-methylphenol	534-52-1	8270C	20-135	40-130	≤30	≤30									
4-Aminobiphenyl	92-67-1	8270C	20-150	20-150	≤30	≤30									
4-Bromophenyl phenyl ether	101-55-3	8270C	45-115	50-115	≤30	≤30									
4-Chloro-3-methylphenol	59-50-7	8270C	45-115	50-110	≤30	≤30									
4-Chloroaniline	106-47-8	8270C	Oct-95	15-110	≤30	≤30									
4-Chlorophenyl phenyl ether	7005-72-3	8270C	45-115	50-110	≤30	≤30									
4-Nitroaniline	100-01-6	8270C	35-115	35-120	≤30	≤30									
4-Nitrophenol	100-02-7	8270C	15-140	0-125	≤30	≤30									
4-Nitroquinoline-1-oxide	56-57-5	8270C	20-150	20-150	≤30	≤30									
5-Nitro-o-toluidine	99-55-8	8270C	20-150	20-150	≤30	≤30									
7,12-Dimethylbenz(a)-anthracene	57-97-6	8270C	20-150	20-150	≤30	≤30									
Acenaphthene	208-96-8	8270C	45-110	45-110	≤30	≤30									
Acenphthylene	83-32-9	8270C	50-105	50-105	≤30	≤30									
Acetophenone	98-86-2	8270C	20-100	39-100	≤30	≤30									
Aniline	62-53-3	8270C	20-150	20-150	≤30	≤30									
Anthracene	120-12-7	8270C	55-105	55-110	≤30	≤30									
Aramite	140-57-8	8270C	20-150	20-150	≤30	≤30									
Atrazine	1912-24-9	8270C	22-100	20-100	≤30	≤30									
Benzaldehyde	100-52-7	8270C	20-100	20-100	≤30	≤30									
Benzo(a)anthracene	56-55-3	8270C	50-110	45-120	≤30	≤30									
Benzo(a)pyrene	50-32-8	8270C	50-110	55-110	≤30	≤30									

Analyte	CAS Number	EPA Method	Solid Accuracy % Recovery	Aqueous Accuracy % Recovery	Solid Precision RPD	Aqueous Precision RPD	Solid LOQ	Solid LOD	Solid DL	Solid LOQ	Solid LOD	Solid DL	Aqueous LOQ	Aqueous LOD	Aqueous DL
Volatile Organic Compounds							(mg/kg)	(mg/kg)	(mg/kg)	(ug/kg)	(ug/Kg)	(ug/Kg)	(µg/L)	(µg/L)	(µg/L)
Benzo(b)fluoranthene	2052-99-2	8270C	45-115	45-120	≤30	≤30									
Benzo(g,h,i)perylene	191-24-2	8270C	40-125	40-125	≤30	≤30									
Benzo(k)fluoranthene	207-08-9	8270C	45-125	45-125	≤30	≤30									
Benzyl alcohol	100-51-6	8270C	20-125	30-110	≤30	≤30									
bis(2-chloroethoxy)methane	111-91-1	8270C	45-110	45-105	≤30	≤30									
bis(2-chloroethyl)ether	111-44-4	8270C	40-105	35-110	≤30	≤30									
bis(2-chloroisopropyl)ether	39638-32-9	8270C	20-115	25-130	≤30	≤30									
bis(2-ethylhexyl)phthalate	117-81-7	8270C	45-125	40-125	≤30	≤30									
Butyl benzyl phthalate	85-68-7	8270C	50-125	45-115	≤30	≤30									
Caprolactam	105-60-2	8270C	45-122	20-100	≤30	≤30									
Carbazole	86-74-8	8270C	45-115	50-115	≤30	≤30									
Chlorobenzilate	510-15-6	8270C	20-150	20-150	≤30	≤30									
Chrysene	218-01-9	8270C	55-110	55-110	≤30	≤30									
Diallate	2303-16-4	8270C	20-150	20-150	≤30	≤30									
Di-n-butyl phthalate	84-74-2	8270C	55-110	55-115	≤30	≤30									
Di-n-octyl phthalate	117-84-0	8270C	40-130	35-135	≤30	≤30									
Dibenzofuran	132-64-9	8270C	50-105	55-105	≤30	≤30									
Dibenzo(a,h)anthracene	53-70-3	8270C	40-125	40-125	≤30	≤30									
Diethyl phthalate	84-66-2	8270C	50-105	40-120	≤30	≤30									
Dimethyl phthalate	131-11-3	8270C	25-125	25-125	≤30	≤30									
p-(Dimethylamino) azobenzene	60-11-7	8270C	20-150	20-150	≤30	≤30									
a,a-Dimethyl phenethylamine	122-09-8	8270C	20-150	20-150	≤30	≤30									
Dimethyl phthalate	131-11-3	8270C	25-125	25-125	≤30	≤30									
Diphenylamine(4)	122-39-4	8270C	50-115	50-110	≤30	≤30									
Ethyl methane sulfonate	62-50-0	8270C	20-150	20-150	≤30	≤30									
Fluoranthene	206-44-0	8270C	55-115	55-115	≤30	≤30									
Fluorene	86-73-7	8270C	50-110	50-110	≤30	≤30									
Hexachlorobenzene	118-74-1	8270C	45-120	50-110	≤30	≤30									
Hexachlorobutadiene	87-68-3	8270C	40-115	25-105	≤30	≤30									
Hexachlorocyclopentadi-ene	77-47-4	8270C	20-134	20-123	≤30	≤30									
Hexachloroethane	67-72-1	8270C	35-110	30-95	≤30	≤30									
Hexachlorophene	70-30-4	8270C	TIC Only	TIC Only	TIC Only	TIC Only									
Hexachloropropene	1888-71-7	8270C	20-150	20-150	≤30	≤30									
Isodrin	465-73-6	8270C	20-150	20-150	≤30	≤30									
Indeno(1,2,3-cd)pyrene	193-39-5	8270C	40-125	45-125	≤30	≤30									
Isophorone	78-59-1	8270C	45-110	50-110	≤30	≤30									
Isosafrole	120-58-1	8270C	20-150	20-150	≤30	≤30									
Kepone	143-50-0	8270C	20-150	20-150	≤30	≤30									
Methapyrilene	91-80-5	8270C	20-150	20-150	≤30	≤30									
Methyl methane sulfonate	66-27-3	8270C	20-150	20-150	≤30	≤30									

Analyte	CAS Number	EPA Method	Solid Accuracy % Recovery	Aqueous Accuracy % Recovery	Solid Precision RPD	Aqueous Precision RPD	Solid LOQ	Solid LOD	Solid DL	Solid LOQ	Solid LOD	Solid DL	Aqueous LOQ	Aqueous LOD	Aqueous DL
Volatile Organic Compounds							(mg/kg)	(mg/kg)	(mg/kg)	(ug/kg)	(ug/Kg)	(ug/Kg)	(µg/L)	(µg/L)	(µg/L)
n-Nitrosodi-n-butylamine	62-75-9	8270C	20-150	20-150	≤30	≤30									
n-Nitrosodiethylamine	55-18-5	8270C	20-150	20-150	≤30	≤30									
n-Nitrosodimethylamine	62-75-9	8270C	20-118	20-100	≤30	≤30									
n-Nitroso-diphenylamine	86-30-6	8270C	50-115	50-110	≤30	≤30									
n-Nitrosodi-n-propylamine	924-16-3	8270C	40-115	35-130	≤30	≤30									
n-Nitrosomethylethylamine	10595-95-6	8270C	20-150	20-150	≤30	≤30									
n-Nitrosomorpholine	59-89-2	8270C	20-150	20-150	≤30	≤30									
n-Nitrosopiperidine	100-75-4	8270C	20-150	20-150	≤30	≤30									
n-Nitrosopyrrolidine	930-55-2	8270C	20-150	20-150	≤30	≤30									
Naphthalene	91-20-3	8270C	40-105	40-110	≤30	≤30									
Nitrobenzene	98-95-3	8270C	40-115	45-110	≤30	≤30									
Pentachlorobenzene	608-93-5	8270C	20-100	20-100	≤30	≤30									
Pentachloronitrobenzene	82-68-8	8270C	20-150	20-150	≤30	≤30									
Pentachlorophenol	87-86-5	8270C	25-120	40-115	≤30	≤30									
Phenacetin	62-44-2	8270C	20-150	20-150	≤30	≤30									
Phenanthrene	85-01-8	8270C	50-110	50-115	≤30	≤30									
Phenol	108-95-2	8270C	40-100	0-115	≤30	≤30									
Pronamide	23950-58-5	8270C	20-150	20-150	≤30	≤30									
Pyrene	129-00-0	8270C	45-125	50-130	≤30	≤30									
Pyridine	110-86-1	8270C	20-100	20-100	≤30	≤30									
Safrole	94-59-7	8270C	20-150	20-150	≤30	≤30									
o-Toluidine	95-53-4	8270C	20-150	20-150	≤30	≤30									
O,O,O-Triethyl phosphorothioate	126-68-1	8270C	20-150	20-150	≤30	≤30									
Disulfoton	298-04-4	8270C	20-150	20-150	≤30	≤30									
Phorate	298-02-2	8270C	20-150	20-150	≤30	≤30									
Famphur	52-85-7	8270C	20-150	20-150	≤30	≤30									
Methyl Parathion	298-00-0	8270C	20-150	20-150	≤30	≤30									
Surrogates															
Nitrobenzene-d5	4165-60-0	8270C	35-110	40-110	n.a.	n.a.									
2-Fluorobiphenyl	321-60-8	8270C	45-105	50-110	n.a.	n.a.									
Terphenyl-d14	98904-43-9	8270C	30-125	50-135	n.a.	n.a.									
Phenol-d5	4165-62-6	8270C	40-100	10-110	n.a.	n.a.									
2-Fluorophenol	367-12-4	8270C	35-105	20-110	n.a.	n.a.									
2,4,6-Tribromophenol	118-79-6	8270C	35-125	40-125	n.a.	n.a.									
Semivolatile Organic Compounds SIM							(mg/kg)	(mg/kg)	(mg/kg)	(ug/kg)	(ug/Kg)	(ug/Kg)	(µg/L)	(µg/L)	(µg/L)
Naphthalene	91-20-3	8270C	40-105	40-110	≤ 30	≤ 30									
Acenaphthylene	208-96-8	8270C	50-105	50-105	≤ 30	≤ 30									
Acenaphthene	83-32-9	8270C	45-110	45-110	≤ 30	≤ 30									
Fluorene	86-73-7	8270C	50-110	50-110	≤ 30	≤ 30									
Phenanthrene	85-01-8	8270C	50-110	50-115	≤ 30	≤ 30									
Anthracene	120-12-7	8270C	55-105	55-110	≤ 30	≤ 30									

Analyte	CAS Number	EPA Method	Solid Accuracy % Recovery	Aqueous Accuracy % Recovery	Solid Precision RPD	Aqueous Precision RPD	Solid LOQ	Solid LOD	Solid DL	Solid LOQ	Solid LOD	Solid DL	Aqueous LOQ	Aqueous LOD	Aqueous DL
Volatile Organic Compounds							(mg/kg)	(mg/kg)	(mg/kg)	(ug/kg)	(ug/Kg)	(ug/Kg)	(µg/L)	(µg/L)	(µg/L)
Fluoranthene	206-44-0	8270C	55-115	55-115	≤ 30	≤ 30									
Pyrene	129-00-0	8270C	45-125	50-130	≤ 30	≤ 30									
Benzo(a)anthracene	56-55-3	8270C	50-110	45-120	≤ 30	≤ 30									
Chrysene	218-01-9	8270C	55-110	55-110	≤ 30	≤ 30									
Benzo(b)fluoranthene	205-99-2	8270C	45-114	45-120	≤ 30	≤ 30									
Benzo(k)fluoranthene	207-08-9	8270C	45-125	45-125	≤ 30	≤ 30									
Benzo(a)pyrene	50-32-8	8270C	50-110	55-110	≤ 30	≤ 30									
Indeno(1,2,3-cd)pyrene	193-39-5	8270C	40-125	45-125	≤ 30	≤ 30									
Benzo(g,h,i)perylene	191-24-2	8270C	40-125	45-125	≤ 30	≤ 30									
Dibenz(a,h)anthracene	53-70-3	8270C	40-125	40-125	≤ 30	≤ 30									
2-Methylnaphthalene	91-57-6	8270C	45-105	45-105	≤ 30	≤ 30									
1-Methylnaphthalene	90-12-0	8270C	39-112	39-100	≤ 30	≤ 30									
SIM Surrogates							(mg/kg)	(mg/kg)	(mg/kg)	(ug/kg)	(ug/Kg)	(ug/Kg)	(µg/L)	(µg/L)	(µg/L)
Nitrobenzene-d5	4165-60-0	8270C	35-110	40-110	n.a.	n.a.									
2-Fluorobiphenyl	321-60-8	8270C	45-105	50-110	n.a.	n.a.									
Terphenyl-d14	98904-43-9	8270C	30-125	50-135	n.a.	n.a.									
Pesticides							(mg/kg)	(mg/kg)	(mg/kg)	(ug/kg)	(ug/Kg)	(ug/Kg)	(µg/L)	(µg/L)	(µg/L)
Aldrin	309-00-2	8081A	45-140	25-140	≤30	≤30									
Alpha-BHC	319-84-6	8081A	60-125	60-130	≤30	≤30									
Alpha-chlordane	5103-71-9	8081A	65-120	65-125	≤30	≤30									
Beta-BHC	319-85-7	8081A	60-125	60-130	≤30	≤30									
4,4'-DDD	72-54-8	8081A	30-135	25-150	≤30	≤30									
4,4'-DDE	72-55-9	8081A	70-125	35-140	≤30	≤30									
4,4'-DDT	50-29-3	8081A	45-140	45-140	≤30	≤30									
Delta-BHC	319-86-8	8081A	55-130	45-135	≤30	≤30									
Dieldrin	60-57-1	8081A	65-125	60-130	≤30	≤30									
Endosulfan I	959-98-8	8081A	15-135	50-110	≤30	≤30									
Endosulfan II	33213-65-9	8081A	35-140	30-130	≤30	≤30									
Endosulfan sulfate	1031-07-8	8081A	60-135	55-135	≤30	≤30									
Endrin	72-20-8	8081A	60-135	55-135	≤30	≤30									
Endrin aldehyde	7421-93-4	8081A	35-145	55-135	≤30	≤30									
Gamma-BHC (Lindane)	58-89-9	8081A	60-125	25-135	≤30	≤30									
Gamma-chlordane	5103-74-2	8081A	65-125	60-125	≤30	≤30									
Heptachlor	76-44-8	8081A	50-140	40-130	≤30	≤30									
Heptachlor epoxide	1024-57-3	8081A	65-130	60-130	≤30	≤30									
Methoxychlor	72-43-5	8081A	55-145	55-150	≤30	≤30									
Toxaphene	8001-35-2	8081A	50-150	50-150	≤30	≤30									
Surrogates							(mg/kg)	(mg/kg)	(mg/kg)	(ug/kg)	(ug/Kg)	(ug/Kg)	(µg/L)	(µg/L)	(µg/L)
Decachlorobiphenyl	2051-24-3	8081A	55-130	30-135	n.a.	n.a.									
Tetrachloro-m-xylene	877-09-8	8081A	70-125	25-140	n.a.	n.a.									
PCBs							(mg/kg)	(mg/kg)	(mg/kg)	(ug/kg)	(ug/Kg)	(ug/Kg)	(µg/L)	(µg/L)	(µg/L)
Aroclor-1016	12674-11-2	8082	40-140	25-145	≤30	≤30									
Aroclor-1221	11104-28-2	8082	n.a.	n.a.	n.a.	n.a.									

Analyte	CAS Number	EPA Method	Solid Accuracy % Recovery	Aqueous Accuracy % Recovery	Solid Precision RPD	Aqueous Precision RPD	Solid LOQ	Solid LOD	Solid DL	Solid LOQ	Solid LOD	Solid DL	Aqueous LOQ	Aqueous LOD	Aqueous DL
Volatile Organic Compounds							(mg/kg)	(mg/kg)	(mg/kg)	(ug/kg)	(ug/Kg)	(ug/Kg)	(µg/L)	(µg/L)	(µg/L)
Aroclor-1232	11141-16-5	8082	n.a.	n.a.	n.a.	n.a.									
Aroclor-1242	53469-21-9	8082	n.a.	n.a.	n.a.	n.a.									
Aroclor-1248	12672-29-6	8082	n.a.	n.a.	n.a.	n.a.									
Aroclor-1254	11097-69-1	8082	n.a.	n.a.	n.a.	n.a.									
Aroclor-1260	11096-82-5	8082	60-130	30-145	≤30	≤30									
Surrogates							(mg/kg)	(mg/kg)	(mg/kg)	(ug/kg)	(ug/Kg)	(ug/Kg)	(µg/L)	(µg/L)	(µg/L)
Decachlorobiphenyl	2051-24-3	8082	60-125	40-135	n.a.	n.a.									
Herbicides							(mg/kg)	(mg/kg)	(mg/kg)	(ug/kg)	(ug/Kg)	(ug/Kg)	(µg/L)	(µg/L)	(µg/L)
Dalapon	75-99-0	8151A	30-150	40-110	≤30	≤30									
4-Nitrophenol	100-02-1	8151A	30-150	30-150	≤30	≤30									
Dicamba	1918-00-9	8151A	55-110	60-110	≤30	≤30									
Dichloroprop	120-36-5	8151A	75-140	70-120	≤30	≤30									
2,4-DB	94-82-6	8151A	50-155	45-130	≤30	≤30									
2,4-D	94-75-7	8151A	35-145	35-115	≤30	≤30									
2,4,5-T	93-76-5	8151A	45-135	35-110	≤30	≤30									
2,4,5-TP (Silvex)	93-72-1	8151A	45-125	50-115	≤30	≤30									
Dinoseb	88-85-7	8151A	n.a.	20-95	≤30	≤30									
Pentachlorophenol	87-86-5	8151A	30-150	50-150	≤30	≤30									
Surrogates							(mg/kg)	(mg/kg)	(mg/kg)	(ug/kg)	(ug/Kg)	(ug/Kg)	(µg/L)	(µg/L)	(µg/L)
2,4-dichlorophenylacetic acid	19719-28-9	8151A	40-135	50-148	n.a.										
Metals							(mg/kg)	(mg/kg)	(mg/kg)	(ug/kg)	(ug/Kg)	(ug/Kg)	(µg/L)	(µg/L)	(µg/L)
Aluminum	7429-90-5	6010B	80-120	80-120	≤20	≤20									
Antimony	7440-36-0	6010B	80-120	80-120	≤20	≤20									
Arsenic	7440-38-2	6010B	80-120	80-120	≤20	≤20									
Barium	7440-39-3	6010B	80-120	80-120	≤20	≤20									
Beryllium	7440-41-7	6010B	80-120	80-120	≤20	≤20									
Cadmium	7440-43-9	6010B	80-120	80-120	≤20	≤20									
Calcium	7440-70-2	6010B	80-120	80-120	≤20	≤20									
Chromium	7440-47-3	6010B	80-120	80-120	≤20	≤20									
Cobalt	7440-48-4	6010B	80-120	80-120	≤20	≤20									
Copper	7440-50-8	6010B	80-120	80-120	≤20	≤20									
Iron	7439-89-6	6010B	80-120	80-120	≤20	≤20									
Lead	7439-92-1	6010B	80-120	80-120	≤20	≤20									
Magnesium	7439-95-4	6010B	80-120	80-120	≤20	≤20									
Manganese	7439-96-5	6010B	80-120	80-120	≤20	≤20									
Mercury	7439-97-6	7470A/71A	80-120	80-120	≤20	≤20									
Nickel	7440-02-0	6010B	80-120	80-120	≤20	≤20									
Potassium	9/7/7440	6010B	80-120	80-120	≤20	≤20									
Selenium	7782-49-2	6010B	80-120	80-120	≤20	≤20									
Silver	7440-22-4	6010B	80-120	80-120	≤20	≤20									
Sodium	7440-23-5	6010B	80-120	80-120	≤20	≤20									
Thallium	7440-28-0	6010B	80-120	80-120	≤20	≤20									
Vanadium	7440-62-2	6010B	80-120	80-120	≤20	≤20									
Zinc	7440-66-6	6010B	80-120	80-120	≤20	≤20									
Tin	7440-31-5	6010B	80-120	80-120	≤20	≤20									
Antimony	7440-36-0	6020	n.a.	80-120	n.a.	≤20	n.a.		n.a.						

Analyte	CAS Number	EPA Method	Solid Accuracy % Recovery	Aqueous Accuracy % Recovery	Solid Precision RPD	Aqueous Precision RPD	Solid LOQ	Solid LOD	Solid DL	Solid LOQ	Solid LOD	Solid DL	Aqueous LOQ	Aqueous LOD	Aqueous DL
Volatile Organic Compounds							(mg/kg)	(mg/kg)	(mg/kg)	(ug/kg)	(ug/Kg)	(ug/Kg)	(µg/L)	(µg/L)	(µg/L)
Arsenic	7440-38-2	6020	n.a.	80-120	n.a.	≤20	n.a.		n.a.						
Barium	7440-39-3	6020	n.a.	80-120	n.a.	≤20	n.a.		n.a.						
Beryllium	7440-41-7	6020	n.a.	80-120	n.a.	≤20	n.a.		n.a.						
Cadmium	7440-43-9	6020	n.a.	80-120	n.a.	≤20	n.a.		n.a.						
Chromium	7440-47-3	6020	n.a.	80-120	n.a.	≤20	n.a.		n.a.						
Cobalt	7440-48-4	6020	n.a.	80-120	n.a.	≤20	n.a.		n.a.						
Copper	7440-50-8	6020	n.a.	80-120	n.a.	≤20	n.a.		n.a.						
Lead	7439-92-1	6020	n.a.	80-120	n.a.	≤20	n.a.		n.a.						
Manganese	7439-96-5	6020	n.a.	80-120	n.a.	≤20	n.a.		n.a.						
Nickel	7440-02-0	6020	n.a.	80-120	n.a.	≤20	n.a.		n.a.						
Selenium	7782-49-2	6020	n.a.	80-120	n.a.	≤20	n.a.		n.a.						
Silver	7440-22-4	6020	n.a.	80-120	n.a.	≤20	n.a.		n.a.						
Thallium	7440-28-0	6020	n.a.	80-120	n.a.	≤20	n.a.		n.a.						
Vanadium	7440-62-2	6020	n.a.	80-120	n.a.	≤20	n.a.		n.a.						
Zinc	7440-66-6	6020	n.a.	80-120	n.a.	≤20	n.a.		n.a.						
Cyanide							(mg/Kg)		(mg/Kg)				(µg/L)		(µg/L)
Cyanide	57-12-5	9012A	80-125	80-115	≤20	≤20	0.5		0.053						
Sulfide							(mg/Kg)		(mg/Kg)				(mg/L)		(mg/L)
Sulfide	12597-04-5	SM 4500 S2F	90-110	90-110	≤20	≤20	n.a.		n.a.						
Anions							(mg/Kg)		(mg/Kg)				(mg/L)		(mg/L)
Chloride		300.0	n.a.	90-110	n.a.	≤20	n.a.		n.a.						
Bromide		300.0	n.a.	90-110	n.a.	≤20	n.a.		n.a.						
Fluoride		300.0	n.a.	90-110	n.a.	≤20	n.a.		n.a.						
Sulfate		300.0	n.a.	90-110	n.a.	≤20	n.a.		n.a.						
Nitrate		300.0	n.a.	90-110	n.a.	≤20	n.a.		n.a.						
Nitrite		300.0	n.a.	90-110	n.a.	≤20	n.a.		n.a.						
Orthophosphate		300.0	n.a.	90-110	n.a.	≤20	n.a.		n.a.						
Explosives							(mg/kg)	(mg/kg)	(mg/kg)	(ug/kg)	(ug/kg)	(ug/kg)	(µg/L)	(µg/L)	(µg/L)
HMX	2691-41-0	8330	75-125	80-115	≤30	≤30									
RDX	121-82-4	8330	70-135	50-160	≤30	≤30									
1,3,5-Trinitrobenzene	99-35-4	8330	75-125	65-140	≤30	≤30									
1,3-Dinitrobenzene	99-65-0	8330	80-125	45-160	≤30	≤30									
Nitrobenzene	98-95-3	8330	75-125	50-140	≤30	≤30									
Tetryl	479-45-8	8330	n.a.	20-175	≤30	≤30									
2,4,6-Trinitrotoluene	118-96-7	8330	55-140	40-145	≤30	≤30									
4-Amino-2,6-dinitrotoluene	1946-51-0	8330	80-125	55-155	≤30	≤30									
2-Amino-4,6-dinitrotoluene	35572-78-2	8330	80-125	50-155	≤30	≤30									
2,6-Dinitrotoluene	606-20-2	8330	80-120	60-135	≤30	≤30									
2,4-Dinitrotoluene	121-14-2	8330	80-125	60-135	≤30	≤30									
2-Nitrotoluene	88-72-2	8330	80-125	45-135	≤30	≤30									
4-Nitrotoluene	99-99-0	8330	75-125	55-155	≤30	≤30									
3-Nitrotoluene	99-08-1	8330	75-120	50-130	≤30	≤30									
Nitroglycerin	55-63-0	8332	50-150	50-150	≤30	≤30									
Polynuclear Aromatic Hydrocarbons							(mg/kg)	(mg/kg)	(mg/kg)	(ug/kg)	(ug/kg)	(ug/kg)	(µg/L)	(µg/L)	(µg/L)
Naphthalene	91-20-3	8310	35-105	50-110	≤30	≤30	42								
Acenaphthylene	208-96-8	8310	35-115	35-115	≤30	≤30	42								

Analyte	CAS Number	EPA Method	Solid Accuracy % Recovery	Aqueous Accuracy % Recovery	Solid Precision RPD	Aqueous Precision RPD	Solid LOQ	Solid LOD	Solid DL	Solid LOQ	Solid LOD	Solid DL	Aqueous LOQ	Aqueous LOD	Aqueous DL
Volatile Organic Compounds							(mg/kg)	(mg/kg)	(mg/kg)	(ug/kg)	(ug/Kg)	(ug/Kg)	(µg/L)	(µg/L)	(µg/L)
1-Methylnaphthalene	90-12-0	8310	50-150	50-150	≤30	≤30	42								
2-Methylnaphthalene	90-57-6	8310	50-150	50-150	≤30	≤30	42								
Acenaphthene	83-32-9	8310	35-105	35-110	≤30	≤30	42								
Fluorene	86-73-7	8310	35-105	45-105	≤30	≤30	42								
Phenanthrene	85-01-8	8310	40-120	55-125	≤30	≤30	42								
Anthracene	120-12-7	8310	40-110	45-125	≤30	≤30	42								
Fluoranthene	206-44-0	8310	50-115	40-135	≤30	≤30	8.3								
Pyrene	129-00-0	8310	50-110	50-115	≤30	≤30	8.3								
Benzo(a)anthracene	56-55-3	8310	50-110	50-105	≤30	≤30	8.3								
Chrysene	218-01-9	8310	50-115	55-102	≤30	≤30	8.3								
7,12-Dimethylbenz(a)anthracene	57-97-6	8310	20-150	20-150	≤30	≤30	8.3								
Benzo(b)fluoranthene	205-99-2	8310	50-110	55-120	≤30	≤30	8.3								
Benzo(k)fluoranthene	207-08-9	8310	50-110	50-120	≤30	≤30	4.15								
Benzo(a)pyrene	50-32-8	8310	45-115	40-135	≤30	≤30	8.3								
Dibenzo(a,h)anthracene	53-70-3	8310	20-110	45-115	≤30	≤30	8.3								
3-Methylcolanthrene	56-49-3	8310			≤30	≤30	8.3								
Benzo(g,h,i)perylene	191-24-2	8310	35-102	55-115	≤30	≤30	8.3								
Indeno(1,2,3-cd)pyrene	193-39-5	8310	45-110	55-135	≤30	≤30	8.3								
Oil and Grease							(mg/Kg)	(mg/Kg)	(mg/Kg)	n.a.	n.a.	n.a.	(mg/L)		(mg/L)
Oil and Grease		9071B	90-110	n.a.	≤25	n.a.							n.a.		n.a.
Oil and Grease HEM		1664A	n.a.	78-114	n.a.	≤18	n.a.	n.a.	n.a.						
Oil and Grease SGTM		1664A	n.a.	64-132	n.a.	≤34	n.a.	n.a.	n.a.						
Phenolics							n.a.	n.a.	n.a.	n.a.	n.a.	n.a.			
Phenolics		9066	n.a.	90-110	n.a.	≤20	n.a.	n.a.	n.a.						
RSK SOP 175							n.a.	n.a.	n.a.	n.a.	n.a.	n.a.			
Methane		RSK SOP 175	n.a.	58-120	n.a.	≤20	n.a.	n.a.	n.a.						
Ethane		RSK SOP 175	n.a.	61-134	n.a.	≤20	n.a.	n.a.	n.a.						
Ethene		RSK SOP 175	n.a.	58-129	n.a.	≤20	n.a.	n.a.	n.a.						
Gas Range Organics/Diesel Range Organics							(mg/Kg)	(mg/Kg)	(mg/Kg)	n.a.	n.a.	n.a.	(mg/L)		(mg/L)
GRO		8015B	75-125	75-125	≤30	≤30									
DRO		8015B	50-150	50-139	≤30	≤30									
TOC							(mg/Kg)	(mg/Kg)	(mg/Kg)						
Total Organic Carbon		9060/9060M	90-110	90-110	≤20	≤20									
Ignitability															
Ignitability		1010A	81° + 2° F	81° + 2° F	± 2° F	± 2° F	n.a.	n.a.	n.a.				n.a.		n.a.
Corrosivity															
Corrosivity		9040B	Eff. 90-105	Eff. 90-105	± 0.10 pH	± 0.10 pH	n.a.	n.a.	n.a.				n.a.		n.a.
pH															
pH		9045C/9045D	Eff. 90-105	Eff. 90-105	± 0.10 pH	± 0.10 pH	n.a.	n.a.	n.a.				n.a.		n.a.

QC Summary DoD QSM

Analyte	CAS Number	EPA Method	Solid Accuracy % Recovery	Aqueous Accuracy % Recovery	Solid Precision RPD	Aqueous Precision RPD	Solid LOQ	Solid LOD	Solid DL	Solid LOQ	Solid LOD	Solid DL	Aqueous LOQ	Aqueous LOD	Aqueous DL
Volatile Organic Compounds							(mg/kg)	(mg/kg)	(mg/kg)	(ug/kg)	(ug/Kg)	(ug/Kg)	(µg/L)	(µg/L)	(µg/L)
Sulfide													(mg/L)		(mg/L)
Sulfide		SM 4500S2F	n.a.	90-110	n.a.	≤ 20	n.a.	n.a.	n.a.						
Total Solids													(mg/L)		(mg/L)
Total Solids		SM 2450B	n.a.	90-110	n.a.	≤ 5	n.a.	n.a.	n.a.						
Total Dissolved Solids													(mg/L)		(mg/L)
Total Dissolved Solids		SM 2540C	n.a.	90-110	n.a.	≤ 5	n.a.	n.a.	n.a.						
Total Suspended Solids													(mg/L)		(mg/L)
Total Suspended Solids		SM 2450D	n.a.	90-110	n.a.	≤ 5	n.a.	n.a.	n.a.						