N00102.AR.002503
NSY PORTSMOUTH
5090.3a

FINAL ENGINEERING EVALUATION/COST ANALYSIS FOR SITE 30 REVISION 2 NSY PORTSMOUTH ME

10/1/2010

TETRA TECH NUS

Engineering Evaluation/ Cost Analysis (EE/CA)

for

Site 30

Portsmouth Naval Shipyard

Kittery, Maine

Naval Facilities Engineering Command Mid-Atlantic

Contract Number N62472-03-D-0057

Contract Task Order 55

October 2010

031010/P

ENGINEERING EVALUATION/ COST ANALYSIS (EE/CA) FOR SITE 30

PORTSMOUTH NAVAL SHIPYARD KITTERY, MAINE

COMPREHENSIVE LONG-TERM ENVIRONMENTAL ACTION NAVY (CLEAN) CONTRACT

Submitted to:
Naval Facilities Engineering Command Mid-Atlantic
9742 Maryland Avenue
Norfolk, Virginia 23511-3095

Submitted by:
Tetra Tech NUS, Inc.
234 Mall Boulevard, Suite 260
King of Prussia, Pennsylvania 19406

CONTRACT NUMBER N62472-03-D-0057
CONTRACT TASK ORDER 55

OCTOBER 2010

PREPARED UNDER DIRECTION OF:

DEBORAH J. COHEN, P.E.
PROJECT MANAGER
TETRA TECH NUS, INC.
PITTSBURGH, PENNSYLVANIA

APPROVED FOR SUBMISSION BY:

JOHN J. TREPANOWSKI, P.E.
PROGRAM MANAGER
TETRA TECH NUS, INC.
KING OF PRUSSIA, PENNSYLVANIA

The professional opinions rendered in this engineering document identified as the Engineering Evaluation/Cost Analysis (EE/CA) for Site 30, Former Galvanizing Plant, Portsmouth Naval Shipyard, Kittery, Maine, were developed in accordance with commonly accepted procedures consistent with applicable standards of practice. This document was prepared under the supervision of the signing engineer and is based on information obtained from others. If conditions are determined to exist differently than those described in this document, then the undersigned professional engineer should be notified to evaluate the effects of any additional information on the project described in this document.

STATE OF MAINE
TIMOTHY
W.
SMITH
No. 11862
LICENSED
PROFESSIONAL ENGINEER

October 2010
Timothy W. Smith, P.E.
State of Maine Professional Engineer 11862

TABLE OF CONTENTS

SECTION **PAGE NO.**

ACRONYMS AND ABBREVIATIONS v

EXECUTIVE SUMMARY ES-1

1.0 INTRODUCTION 1-1
1.1 PURPOSE AND SCOPE 1-1
1.2 REGULATORY FRAMEWORK 1-1
1.3 ORGANIZATION OF THE EE/CA 1-2

2.0 FACILITY DESCRIPTION AND SITE CHARACTERIZATION 2-1
2.1 BACKGROUND INFORMATION 2-1
2.2 SITE LOCATION AND DESCRIPTION 2-1
2.3 PREVIOUS REMOVAL ACTIONS 2-3
2.4 PREVIOUS INVESTIGATIONS 2-4
2.4.1 Historical Observations 2-4
2.4.2 Site Screening Report 2-5
2.4.3 Test Pitting Investigation 2-5
2.4.4 Engineering Evaluation/Cost Analysis 2-6
2.4.5 Groundwater Evaluation 2-6
2.5 NATURE OF TANK VAULT CONTENTS AND SOURCE OF CRYSTAL GROWTH 2-7

3.0 IDENTIFICATION OF REMOVAL ACTION OBJECTIVES 3-1
3.1 APPLICABLE OR RELEVANT AND APPROPRIATE REQUIREMENTS 3-1
3.2 REMOVAL ACTION OBJECTIVES 3-2
3.3 REMOVAL ACTION SCOPE 3-2
3.4 REMOVAL ACTION SCHEDULE 3-3

4.0 IDENTIFICATION, DEVELOPMENT, AND ANALYSIS OF REMOVAL ACTION ALTERNATIVES 4-1
4.1 IDENTIFICATION AND DEVELOPMENT OF ALTERNATIVES 4-1
4.1.1 Alternative 1 – No Action 4-1
4.1.2 Alternative 2 – Excavation and Off-yard Disposal 4-2
4.2 EVALUATION CRITERIA 4-4
4.3 EVALUATION OF ALTERNATIVES 4-4
4.3.1 Alternative 1 – No Action 4-4
4.3.2 Alternative 2 – Excavation and Off-yard Disposal 4-5
4.4 COMPARISON OF ALTERNATIVES 4-6
4.4.1 Effectiveness 4-6
4.4.2 Implementability 4-6
4.4.3 Cost 4-6

5.0 RECOMMENDED REMOVAL ACTION ALTERNATIVE 5-1

REFERENCES R-1

TABLE OF CONTENTS (Continued)

APPENDICES

A **TEST PITTING INVESTIGATION RESULTS (Tables from the Test Pitting Investigation Report)**
B **GROUNDWATER TECHNICAL EVALUATION**
C **QUANTITY CALCULATIONS AND ASSUMPTIONS FOR COSTING INPUT**
D **COST ESTIMATES**
E **RESPONSES TO COMMENTS**

TABLES

NUMBER

3-1 Chemical-Specific ARARs and TBCs
3-2 Location-Specific ARARs and TBCs
4-1 Screening of Technologies and Process Options

FIGURES

NUMBER

2-1 PNS and Site Location Map
2-2 Building 184 Location Map
2-3 1943 As-Built Building Conditions Plan and Sections
2-4 General Building Layout and Test Pit Material Physical Characteristics
4-1 Alternative 2 Conceptual Excavation and Grading Plan

ACRONYMS AND ABBREVIATIONS

AM	Action Memorandum
ARAR	Applicable or Relevant and Appropriate Requirement
CAA	Clean Air Act
CERCLA	Comprehensive Environmental Response, Compensation, and Liability Act
CFR	Code of Federal Regulations
CLEAN	Comprehensive Long-Term Environmental Action Navy
CMR	Code of Maine Rules
COC	Chemical of Concern
CTO	Contract Task Order
CSF	Cancer Slope Factor
CWA	Clean Water Act
cy	Cubic yard
DRO	Diesel Range-Organic
EE/CA	Engineering Evaluation/Cost Analysis
FFA	Federal Facility Agreement
GRO	Gasoline Range-Organic
ICP	Inductively-Coupled Plasma
IRIS	Integrated Risk Information System
LUCs	Land Use Controls
MEDEP	Maine Department of Environmental Protection
mg/kg	Milligram per kilogram
MRSA	Maine Revised Statutes Annotated
NAAQS	National Ambient Air Quality Standards
NCP	National Oil and Hazardous Substance Pollution Contingency Plan
NHPA	National Historic Preservation Act
NOAA	National Oceanic and Atmospheric Administration
NPL	National Priorities List
O&M	Operation and Maintenance
OSHA	Occupational Safety and Health Act
PNS	Portsmouth Naval Shipyard
POTW	Publicly owned treatment works
RAB	Restoration Advisory Board
RAO	Removal action objective
RCRA	Resource Conservation and Recovery Act
RfD	Reference Dose

RI/FS	Remedial Investigation/Feasibility Study
SARA	Superfund Amendments and Reauthorization Act
SVOC	Semivolatile organic compound
TAL	Target Analyte List
TBC	To Be Considered
TCLP	Toxicity Characteristic Leaching Procedure
TSD	Treatment, Storage, and Disposal
TtNUS	Tetra Tech NUS, Inc.
USC	United States Code
USEPA	United States Environmental Protection Agency
VOC	Volatile Organic Compound

EXECUTIVE SUMMARY

This second revision of the Engineering Evaluation/Cost Analysis (EE/CA) report for Site 30 (Former Galvanizing Plant, Building 184) at Portsmouth Naval Shipyard (PNS), Kittery, Maine has been prepared by Tetra Tech NUS, Inc. (TtNUS) to provide the documentation necessary to support a non-time-critical removal action at Site 30. The EE/CA and subsequent actions focus on the former tank vault beneath a portion of the interior floor of Building 184 at Site 30. The EE/CA was previously finalized in December 2002; however, the Navy determined that a revised EE/CA (Revision 1) was required for evaluating removal action alternatives that would minimize potential impacts to the mission-critical activities in Building 184. The revised EE/CA (Revision 1) provided an interim remedy until PNS could relocate the activities from Building 184 and a final remedy could be conducted. The welding school has since relocated and Building 184 is vacant, aside from welding booths that will be removed, as necessary, as part of the removal action. This revised EE/CA (Revision 2) evaluates removal action alternatives for the final remedy at Site 30.

The Navy has determined that the non-time-critical removal action is necessary to abate potential exposure to nearby human populations, to mitigate the potential threat of a release to the environment of hazardous substances associated with the former tank vault within Building 184, and to allow use of the site with no use restrictions. The non-time-critical removal action is to be conducted under guidance provided by the Comprehensive Environmental Response, Compensation, and Liability Act (CERCLA) as amended by the Superfund Amendments and Reauthorization Act (SARA).

A crystalline substance was noticed along the edge of the former acid pit in 1973 and again in 1994 and 1996. Examination showed that the material was predominantly a white, needle-like, water-soluble crystal. Multiple samples of the substance have been collected from the base of the interior wall along the eastern edge of the tank vault and analyzed. Analysis indicates the material may be considered a hazardous waste based on the Resource Conservation and Recovery Act (RCRA) characteristic of corrosivity (pH less than 2.0). Additional investigations of the former tank vault were conducted to more accurately assess potential past environmental releases. Among these additional investigations was a test pitting investigation to obtain an indication of the nature of soil used to backfill the former tank vault. The former tank vault contents were sampled at one location to provide only an indication of its chemical nature. The test pitting investigation showed crystals with low pH in the tank vault. Based on the findings of the test pitting investigation, the Navy recommended that a non-time critical removal action be implemented (TtNUS, May 2002)

The following RAO for Site 30, Building 184 tank vault, was developed based on the potential risks for exposure to contaminated material in the tank vault.

- Mitigate human health and environmental risks associated with the tank vault in a manner such that the property can be used for unrestricted use/unlimited exposure.

Because the RAO to remediate Site 30 was for un-restricted use and because of the types (fill, bricks, concrete) and small volume of contaminated material, excavation and disposal was the only available technologies to develop into remedial alternatives. Therefore, only two alternatives were developed for evaluation for Site 30. These two removal actions include:

Alternative 1: No Action
Alternative 2: Excavation and Off-yard Disposal

Under Alternative 1, included as a baseline for comparison as required by the CERCLA process, no activities to abate the potential risks or mitigate the potential threat of a release would be conducted. Under Alternative 2, all tank vault contents, lining materials, associated piping within the limits of excavation, and associated contaminated soil would be excavated and sent off-yard for disposal.

The alternatives were compared for their predicted effectiveness in meeting the RAO, implementability, and cost. Alternative 1 would not be effective in meeting the RAOs. Alternative 2 would be effective in meeting the RAO. Alternative 2 would eliminate the source of crystal growth and remove the soluble constituents in the tank vault from the site resulting in an area available for use with no restrictions, by eliminating site contamination. Alternative 2 offers the greatest certainty of removal of site contamination removing the sources of crystal growth and pit water contaminants.

Regarding implementability concerns, Alternative 2 would require the transportation of impacted and clean material to and from the building during implementation, leading to an increase in truck traffic within the local roads of PNS. The facilities, equipment, and processes necessary to implement Alternative 2 are readily available. Alternative 1 would not require any implementation.

The present-worth costs of the alternatives are estimated to be as follows:

Alternative 1: $0
Alternative 2: $1,023,274

Of the two alternatives, Alternative 2, Excavation and Off-yard Disposal, is recommended as the alternative capable of meeting the RAO.

1.0 INTRODUCTION

Tetra Tech NUS, Inc. (TtNUS) has prepared this second revision of the Engineering Evaluation/Cost Analysis (EE/CA) report for Site 30 (Former Galvanizing Plant, Building 184) at Portsmouth Naval Shipyard (PNS) in Kittery, Maine. The EE/CA was previously finalized in December 2002; however, the Navy determined that a revised EE/CA (Revision 1) was required for evaluating removal action alternatives that would minimize potential impacts to the mission-critical activities in Building 184 (TtNUS, 2002 and 2005). The revised EE/CA (Revision 1) (TtNUS, 2005) provided an interim remedy until activities at Building 184 could be relocated and a final remedy could be conducted. This EE/CA (Revision 2) evaluates removal action alternatives for the final remedy at Site 30. This report was prepared for the Naval Facilities Engineering Command Mid-Atlantic under the Comprehensive Long-Term Environmental Action Navy (CLEAN), Contract Number N62472-03-D-0057, Contract Task Order (CTO) 0055. The Navy has determined that the non-time-critical removal action is necessary to abate potential human exposure to hazardous substances and to mitigate the potential threat of a release to the environment of hazardous substances associated with the former tank vault within Building 184, as described in this report. This revised EE/CA has been prepared in general accordance with procedures developed under the Comprehensive Environmental Response, Compensation, and Liability Act (CERCLA) as amended by the Superfund Amendments and Reauthorization Act (SARA).

1.1 PURPOSE AND SCOPE

This EE/CA has been prepared to provide the CERCLA documentation necessary to support a non-time-critical removal action at Site 30. The EE/CA and subsequent actions focus on contamination within the former tank vault beneath a portion of the interior floor of Building 184.

1.2 REGULATORY FRAMEWORK

Pursuant to CERCLA, the PNS was added to the National Priorities List (NPL) by the United States Environmental Protection Agency (USEPA) on May 31, 1994. Site 30 was included as a site screening area and is listed in Appendix C of the Federal Facility Agreement (FFA), which requires further investigation to determine whether no further action or a Remedial Investigation/Feasibility Study (RI/FS) is necessary for the site. Given the conditions that exist at Site 30, the Navy has determined that a non-time-critical removal action is appropriate for Site 30 before determining whether an RI/FS is necessary. Under the CERCLA program, an EE/CA is prepared to document the decision-making process to conduct a non-time-critical removal action. This study has been prepared using USEPA's Guidance on Conducting Non-Time-Critical Removal Actions Under CERCLA (USEPA, August 1993).

Based on the guidance document, an EE/CA is prepared for non-time-critical removal actions at sites when the lead agency determines, based on the evaluation of the site, that a removal action is appropriate. The term “removal action” does not necessarily imply that the remedy selected will actually involve the physical removal of the materials at the site. As listed in the guidance and outlined in Section 300.415(b)(2)(i)-(viii) of the National Oil and Hazardous Substances Pollution Contingency Plan (NCP), a removal action may potentially include the following:

- Prevention or abatement of actual or potential exposure to nearby human populations, animals, or the food chain from hazardous substances, pollutants, or contaminants.

- Prevention or abatement of actual or potential contamination of drinking water supplies or sensitive ecosystems.

- Stabilization or elimination of hazardous substances in drums, barrels, tanks, or other bulk storage containers that may pose a threat of release.

- Treatment or elimination of high levels of hazardous substances, pollutants, or contaminants in soils largely at or near the surface that may migrate.

- Minimization or elimination of the effects of weather conditions that may cause hazardous substances, pollutants, or contaminants to migrate or to be released.

- Elimination of threat of fire or explosion.

- Determination of availability of other appropriate federal or state response mechanisms to respond to the release.

- Mitigation or abatement of other situations or factors that may pose threats to public health, welfare, or the environment.

The first and last bulleted items pertain to the conditions associated with Site 30 and are considered in this report.

1.3 ORGANIZATION OF THE EE/CA

The report is organized into five sections and five appendices as follows:

- Section 1.0 provides an introduction to the report, including the purpose, organization, and the regulatory framework.

- Section 2.0 presents the facility description and site characterization.

- Section 3.0 identifies the removal action objectives (RAOs).

- Section 4.0 discusses potential removal technologies and alternatives and compares the removal action alternatives with respect to their ability to achieve the objectives presented in Section 3.0.

- Section 5.0 presents the recommended alternative.

- Appendix A provides the results of the Test Pitting Investigation.

- Appendix B provides the Groundwater Evaluation for Site 30.

- Appendix C provides the volume calculations associated with the removal action alternatives.

- Appendix D provides the cost estimates for the removal action alternatives.

- Appendix E provides the responses to regulator comments received during the development of this document.

A list of references is also included in the report.

2.0 FACILITY DESCRIPTION AND SITE CHARACTERIZATION

Information about the facility and site location, previous removal actions, contamination, and the risk evaluation are presented in this section.

2.1 BACKGROUND INFORMATION

PNS is a military facility with restricted access located on an island in the Piscataqua River, as shown on Figure 2-1. PNS is referred to on National Oceanic and Atmospheric Administration (NOAA) nautical charts as Seavey Island. The Piscataqua River is a tidal estuary that forms the southern boundary between Maine and New Hampshire. PNS is located in Kittery, Maine, north of Portsmouth, New Hampshire, at the mouth of the Great Bay Estuary (commonly referred to as Portsmouth Harbor).

PNS is engaged in the conversion, overhaul, and repair of submarines for the Navy. The long history of shipbuilding in Portsmouth Harbor dates back to 1690, when the first warship launched in North America, the Falkland, was built. PNS was first established as a government facility in 1800, and it served as a repair and building facility for ships during the Civil War. The first government-built submarine was designed and constructed at PNS during World War I. A large number of submarines have been designed, constructed, and repaired at this facility since 1917. PNS continues to service submarines as its primary military focus.

2.2 SITE LOCATION AND DESCRIPTION

The location of Site 30 at PNS is shown on Figure 2-1 and the location of Building 184 is shown on Figure 2-2. Building 184 was constructed in 1943 as a galvanizing plant to accommodate the shipyard's increased production schedule in support of the World War II war effort. Before the war, all galvanizing was conducted off yard by a private contractor. Specific equipment requirements included in the galvanizing area were a pit for a galvanizing furnace and a zinc kettle, a water tank, and a pit for a centrifugal machine.

The focus of this report is the former tank vault within Building 184. The tank vault was constructed at the approximate center of the building, along the eastern wall. The eastern wall of the tank vault was constructed against the exterior wall of the building. The tank vault, measuring approximately 52 feet long by 35 feet wide by a maximum of approximately 4 feet deep, was constructed as a concrete vault lined with acid-proof bricks set in acid-proof cement. The bottom of the tank vault was sloped to a drain at the center of the western side of the vault. The original drain was plumed to the Shipyard's sanitary sewer system on the western side of the building. The tank vault originally contained pickling tanks

including a flux tank, a water tank, an acid tank, and a caustic tank. These tanks were used to remove oxide scale from metal surfaces by immersion in a diluted acid bath to obtain a chemically clean surface in preparation for plating and galvanizing. Details regarding the location, size, and cross-sectional views of the pits and floor can be found in the Industrial History of Building 184 (Dolph and Hall, September 1995).

During peak production, between 1943 and 1945, up to 500,000 pounds of material were galvanized per month. In 1945, one of the pickling tanks was replaced and an additional tank was installed. By the end of the war, the shipyard's production requirements were reduced dramatically, and galvanizing was once again performed off yard by a private contractor.

In 1946, Building 184 was converted from a galvanizing plant to the shipyard's electrical testing laboratory. The tank vault was partially filled with gravel, and the drain was covered with a piece of wood and burlap. Four cement foundations were laid over the former tank vault to support large shock-testing and vibration-testing machines. The conditions of the tank vault and tank at the time of covering are unknown. Molds and dies were also stored in this area at the time. Sometime between 1954 and 1956, the building was converted into a Clean Room Facility and used for cleaning and assembling metal parts. The pickling tanks were uncovered, and agitation pumps and heating coils were installed to be used for metal parts assembly. The tanks were filled with various chemicals, including large amounts of sulfuric acid, trisodium phosphate, alcohol, and acetone. The heat and vapors that were produced from the cleaning tanks were so strong that condensation was produced that dripped from the walls. An overhead ventilation system was installed to prevent this problem. The acid tank was periodically used for cleaning carbon steel piping. The pipe cleaning work that was in progress was disrupted due to excessive fumes when the acid tank was first filled. A separate ventilation system to address these fumes was not justified because of the limited amount of acid cleaning that was done in the building.

In the early 1960s, the building was converted into a welding school, and a flame-spray galvanizing system was installed in the building. The former tank vault was again covered over to accommodate the installation of electric welding machines and booths. The conditions of the former tank vault and tank at the time of covering are unknown. Between 1973 and 1975, the building was renovated and an office was constructed over the former tank vault area. In 1982, an aluminum louver was installed along with 440-volt electrical service (Dolph and Hall, September 1995). The welding school has since relocated, and the building is currently vacant.

The specific types and quantities of chemicals used throughout the history of Building 184 are largely unknown. However, chemicals used in industrial cleaning operations similar to these performed at the shipyard include caustic solutions (sodium hydroxide, sodium carbonate, trisodium phosphate, and

tetrasodium pyrophosphate), acid solutions (hydrochloric and sulfuric), and flux solutions (sodium silicate). These chemicals were most likely used when Building 184 was a galvanizing plant and when the tanks were used as industrial cleaning tanks.

According to drawings contained within the industrial history report for Building 184 (Dolph and Hall, September 1995), the plumbing for the building appears to exit the building along the western side, where it ties into the sewers. Detailed sewer drawings are not contained in the historical report.

Building 184 has been determined to be a historically significant building. An evaluation of the need for work to be performed near or within Building 184 to comply with Section 106 of the National Historic Preservation Act (NHPA) is discussed further in Section 2.4.1.

The 1943 as-built information available at PNS has been compiled onto Figure 2-3. It is assumed that the elevations shown on the 1943 as-built drawing are based on PNS Mean High Water Datum value of 100.32 feet. The PNS 2002 vertical datum equates mean high water to 100.36 feet. This information is used throughout this report for the development and evaluation of the removal action alternatives.

The general location of the former tank vault, as shown on Figure 2-4, is currently covered by a concrete floor slab. The former tank vault is clearly delineated by a slightly raised floor slab and by the joints between the original adjacent floor and the slab placed over the former tank vault area. A wood-framed office structure, welding training booths, and various equipment are located on the former tank vault area floor slab. Additionally, two floor drains and a clean-out plug are present within the concrete slab in the area of the former tank vault. Another important feature is a utility trough that transects the entire width of the northern end of the former tank vault.

During a site visit to Building 184 in December 2001, TtNUS noted that the surface drainage on the exterior of the building was poor. The ground surfaces exterior to both the eastern and western sides of the building were paved with asphalt. Standing water was observed against the exterior of the eastern wall of the building. Peeling paint and evidence of water damage were also observed on the interior and exterior of this wall. A small shed roof was connected to the eastern wall for the protection of welding generators. This roof appeared to allow water to drain directly to the pavement. As discussed in Section 2.3, drainage concerns were addressed as part of the interim removal action activities.

2.3 PREVIOUS REMOVAL ACTIONS

No documented CERCLA removal actions were conducted at Building 184 prior to 2005. The former acid tanks that were located within the tank vault are believed to have been removed prior to the backfilling of the tank vault. Documentation of these activities has not been found.

A revised EE/CA (Revision 1) was finalized in August 2005 and an interim removal action alternative was recommended (TtNUS, August 2005). The recommended alternative was Alternative 4, Long-Term Periodic Crystal Removal, Minimization of Water Entering Pit, and Pit Dewatering. To prevent exposure to crystalline growth periodic removal of the crystal growth from the eastern wall/floor interface and covering of the crystal growth with a plastic-coated canvas called herculite was conducted. During the removal action conducted for Site 34, a new drainage pattern was installed around Building 184 to direct stormwater away from the building. This work included the removal of an existing concrete slab in the parking lot, installing an underground collection drain, and installing new asphalt pavement (Shaw, July 2008).

2.4 PREVIOUS INVESTIGATIONS

This section describes the site-specific field investigation tasks conducted at Site 30. The investigations at Site 30 focused on the former galvanizing and metal cleaning facility (specifically, the tank vault), active from the 1940s through the early 1960s.

2.4.1 Historical Observations

In 1973, a crystalline substance was noticed along the edge of the former tank vault (Dolph and Hall, September 1995). The crystalline material was reportedly removed through normal housekeeping methods following the reported investigation. In 1994, a crystalline substance was again noticed along the edges of the former tank vault. Samples of the substance were collected along the eastern edge of the tank vault at the base of the interior wall and analyzed. A Toxicity Characteristic Leaching Procedure (TCLP) analysis was conducted by Environmental Science Services. Visual observations, ion chromatography, and Inductively-Coupled Plasma (ICP) spectroscopy were conducted by PNS Material Testing Laboratory. The results of these observations and analyses are presented in Appendix G of the Site Screening Report for Sites 30, 31, and 32 (TtNUS, May 2000). As reported by the laboratory, microscopic examination showed that the material was predominantly a white, needle-like, water-soluble crystal. The material had a pH of 1.0, which exceeds the Resource Conservation and Recovery Act (RCRA) corrosivity criterion to be classified as a hazardous waste, based on this characteristic. Analysis by ion chromatography indicated that the material was composed of sulfur compounds. ICP spectroscopy analytical results indicated that the material contained the following metals: magnesium, aluminum, iron, sodium, zinc, manganese, nickel, copper, and chromium. The TCLP analysis detected low concentrations of arsenic, barium, cadmium, chromium, and lead. With the exception of pH, the crystalline material did not exceed TCLP criteria. As a result of the high acidic readings (pH less than 2.0), the crystalline material was classified as a RCRA hazardous waste and was reportedly removed and

disposed of as a hazardous waste. Concentrations did not exceed TCLP criteria to be classified as a RCRA hazardous waste based on the leachability characteristic.

In 1996, a crystalline substance was again observed along the base of the wall along the tank vault. A sample of the crystalline substance was collected in 1997 from the interior of the building, along the eastern side at the edge of the former tank vault. The sample was analyzed for Target Analyte List (TAL) metals, hexavalent chromium, sulfate, and pH, based on previous analytical data reported by the Navy. Analytical results similar to those obtained for the 1994 sample were reported for the 1997 sample. The results of these analyses indicated that sulfate was the predominant anionic constituent [approximately 830,000 milligram/kilogram (mg/kg) dry weight] and aluminum was the predominant metal constituent (approximately 48,000 mg/kg dry weight) of the crystalline sample. Other metals (magnesium at 36,300 mg/kg dry weight, iron at 25,600 mg/kg dry weight, and manganese at 12,600 mg/kg dry weight) comprised the other constituents. Therefore, the crystalline material predominantly consisted of sulfate and metals. The pH of the crystalline sample collected in 1997 was 2.1.

These data indicate the material may be considered a hazardous waste based on the RCRA characteristic of corrosivity (pH less than 2.0).

2.4.2 Site Screening Report

In 1998, an investigation of the surface soil, subsurface soil, and groundwater was conducted in the vicinity of Building 184. The results of this investigation were presented in the Site Screening Report for Sites 30, 31, and 32 (TtNUS, May 2000). The report recommended that it might be necessary to perform additional investigation activities at the former tank vault within Building 184 to more accurately assess potential past environmental releases.

2.4.3 Test Pitting Investigation

A test pitting investigation was conducted in 2001 based on the recommendation in the Site Screening Report. During the planning of this investigation, it was determined that limited sampling should be conducted to obtain additional data on the source area (i.e., the former tank vault) in order to make recommendations for further action or no further action. However, investigation of the subsurface soil beneath the former tank vault substructure was not considered necessary for the additional investigation. The test pitting investigation for Building 184 included collection of four crystal samples from different locations, five former tank vault fill material samples, and four former tank vault water samples for analysis. The sample locations are shown on Figure 2-4. The former tank vault contents were sampled at one location only to provide an indication of its chemical nature and not to characterize the entire tank vault contents. The water level in the tank vault was measured at 2.4 feet. Results from the Test Pitting

Investigation were used to make assumptions regarding disposal of materials for cost estimating purposes. Test Pitting Investigation data are included in Appendix A.

The investigation report stated that the pit water is not expected to be hydraulically connected to the groundwater at the site as indicated by the difference in groundwater elevations between the pit water and a monitoring well outside the building.

The Navy recommended that a non-time-critical removal action be implemented to address the former tank vault (TtNUS, May 2002). The Navy also recommended that the need for additional investigation to assess soil and groundwater potentially impacted by the tank vault contents be evaluated following the removal action.

2.4.4 Engineering Evaluation/Cost Analysis

The Navy originally finalized the EE/CA (TtNUS, December 2002, Revision 0) and held a public comment period from January 21, 2003 to February 19, 2003. The Navy then prepared the draft Action Memorandum (AM) (Navy, March 2003) to support the selection of a non-time-critical removal action. The recommended alternative in the original EE/CA was excavation/off-site disposal of the former tank vault contents followed by site restoration. Following receipt of public comments and the determination by the Navy that mission-critical activities within Building 184 could not be interrupted, the Navy issued a letter dated July 25, 2003 (Navy, July 2003) explaining the need to prepare a revised EE/CA and AM.

Subsequently, a revised EE/CA (TtNUS, August 2005) was finalized and a removal action alternative that would not require relocation activities and excavation of tank vault materials within Building 184 was recommended. The recommended alternative was Alternative 4, Long-Term Periodic Crystal Removal, Minimization of Water Entering Pit, and Pit Dewatering. The crystalline growth was removed and the area covered in 2006. Paving to direct stormwater away from the building was conducted in 2007.

2.4.5 Groundwater Evaluation

To support Revision 2 of the EE/CA, a technical evaluation of the groundwater at Site 30 was conducted based on data provided during investigations from Site 30 and Site 32. This groundwater evaluation was conducted to provide the most current understanding of geology, hydrogeology, and groundwater quality at Site 30. The data indicate that contamination in the tank vault has not adversely impacted groundwater at, or downgradient of, Site 30 based on pH, water level elevations, and metals concentrations in groundwater. In addition, groundwater data for Site 30 and nearby downgradient wells indicate that the groundwater at, and in the vicinity of, Site 30 is brackish and would not be a source of drinking water. The technical evaluation is included as Appendix B.

2.5 NATURE OF TANK VAULT CONTENTS AND SOURCE OF CRYSTAL GROWTH

Organic compounds were generally infrequently detected or were present at relatively minor concentrations compared to inorganic constituents in the former tank vault fill material and tank vault water. Volatile organic compounds (VOCs) and semivolatile organic compounds (SVOCs) were generally not detected or were present at low concentrations. Among pesticides, only 4,4'-DDT was detected, at low levels. Diesel Range-Organics (DROs) were detected in the former tank vault fill material and tank vault water. Gasoline Range-Organics (GROs) were detected in the tank vault water. The predominant anion detected in each of the samples (crystal, tank vault fill material, and tank vault water) was sulfate. Aluminum, iron, and magnesium were the metals consistently detected at the highest concentrations in the samples. Other metals were also present but not at concentrations as high as aluminum and magnesium.

An evaluation of the origin of the crystal growth indicated that a direct pathway of chemical migration from the former tank vault fill material to the crystals could not be established with the available data. However, based on the similarity of the highest metal and sulfate components, it was possible to indirectly indicate that the crystals could be originating from the former tank vault fill material.

Historically and as noted during the recent investigations, the crystals have been observed to grow at several locations along the length of the former tank vault. This occurrence tends to support the historical information on tank vault use and that the tank vault fill material is expected to have similar chemical constituents throughout. Therefore, it is likely that the entire contents of the former tank vault may need to be addressed in order to minimize or eliminate the potential source of crystal growth.

A suspected mechanism for crystal growth is capillary migration of dissolved acidic salts from the tank vault contents to the surface via the interface and zone between the fill material and the acid-proof bricks. The acid-proof lining brick may also have absorbed salts during the former operations within the tank vault, which may in turn, be leaching these salts into the adjacent tank vault fill material and tank vault water. Possibly, leachate may have also penetrated the substructure concrete walls. The tank vault water forming the leachate may be resulting from the infiltration of surface water along the exterior wall of the building. This eastern wall of the building also forms the back wall of the tank vault and appears from archive drawings to be in direct contact with the brick lining of the tank vault. This assumed mechanism of leachate formation and crystal growth is supported by the observation of the growth of crystals along the exterior wall and not at other surface locations on the other three floor joints of the former tank vault. Based on the above observations, it is inferred that infiltration of water via the original tank vault drain at the western edge sump is not the main source of water within the former tank vault. Furthermore, based on the findings of the Test Pitting Investigation (TtNUS, May 2002), the groundwater is not the suspected

source of water within the former tank vault. This conclusion is based on the difference in water elevations between the tank vault water (which was higher) and groundwater within a nearby monitoring well (B184-MW02), as noted during the investigation. The water level last measured in the tank vault by TtNUS in March 2001 indicated there was 2.4 feet of water in the tank vault. However, the potential exists for the tank vault water to migrate through cracks or gaps, if any exist in the brick lining and the concrete containment, to the groundwater beneath the site.

It is not known if any or all of the acid-proof brick lining materials were removed from the tank vault prior to the backfilling and concrete floor placement over the tank vault. However, field observations during the test pitting investigation indicate the presence of some of these bricks.

The presence of crystals within the building constitutes a potential for corrosive effects to the exposed skin of receptors. The removal of the contaminated materials in the tank vault in conjunction with the removal of any acid-proof brick in contact with walls or floor surfaces is expected to stop the growth of crystals.

The following summarizes the potential exposure pathways and risks related to the contaminated fill in the tank vault based on current site use (industrial):

- There is potential risk to occupational workers in Building 184 from exposure to crystals with low pH in the tank vault and on the nearby building wall if the crystals were uncovered.

- There is potential risk to a construction worker exposed to crystals with low pH and metals in the tank vault water.

- There is future potential for contaminants in the tank vault to adversely impact underlying soil and groundwater if any cracks or gaps are present in the brick lining and the concrete containment.

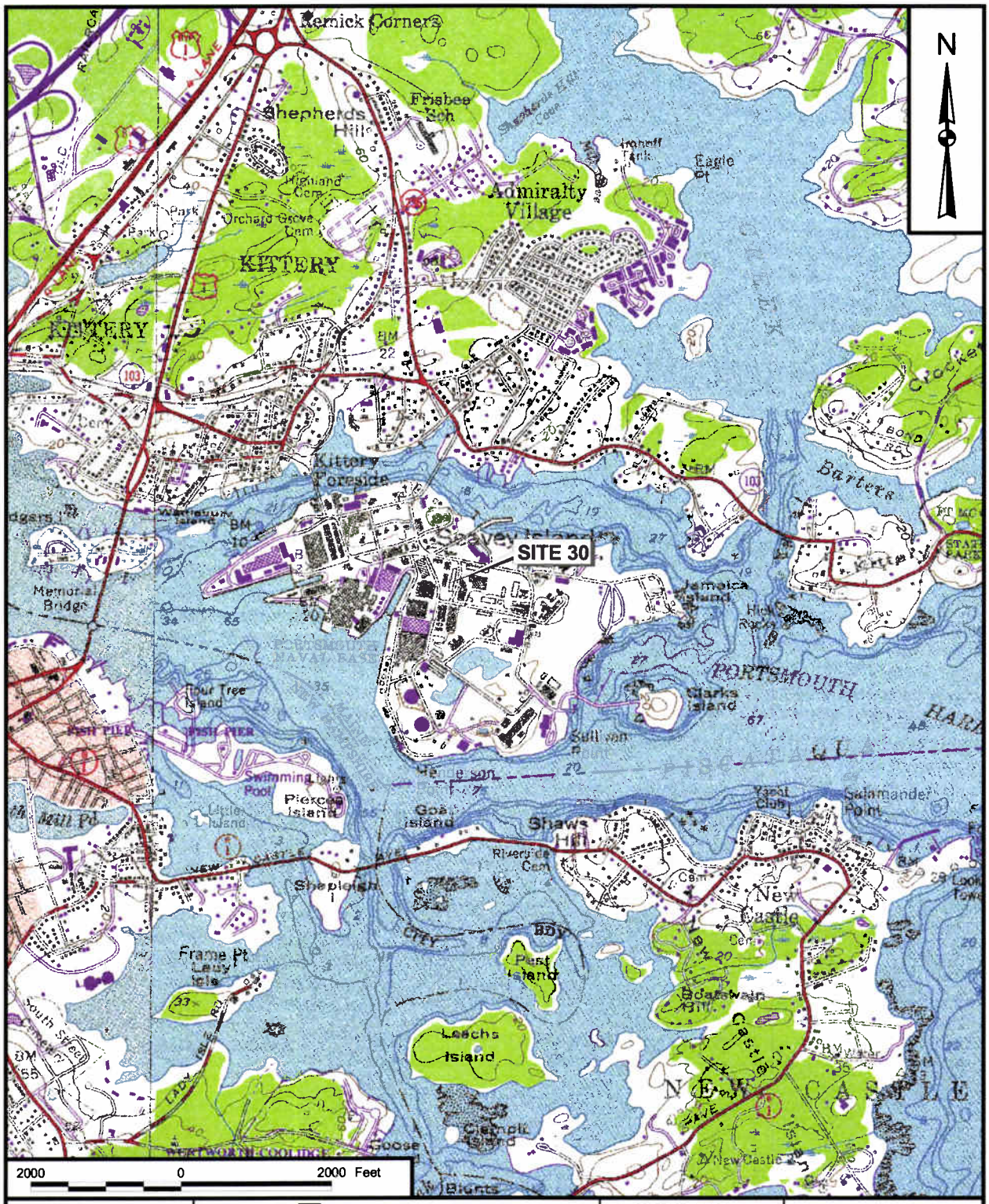

DRAWN BY	DATE	Tetra Tech NUS, Inc.	CONTRACT NUMBER	OWNER NO.
J. LAMEY	3/23/04		0383	0055
CHECKED BY	DATE	PNS AND SITE LOCATION MAP PORTSMOUTH NAVAL SHIPYARD KITTERY, MAINE	APPROVED BY	DATE
M. GRAY	1/21/10			
COST/SCHEDULE-AREA			APPROVED BY	DATE
SCALE			DRAWING NO.	REV
AS NOTED			FIGURE 2-1	0

P:\GIS\PORTSMOUTH_NSY\APR\SITE30.APR SITE LOCATION 1/21/10 SP

ACAD: 4169CM09.dwg 03/22/10 ND PIT

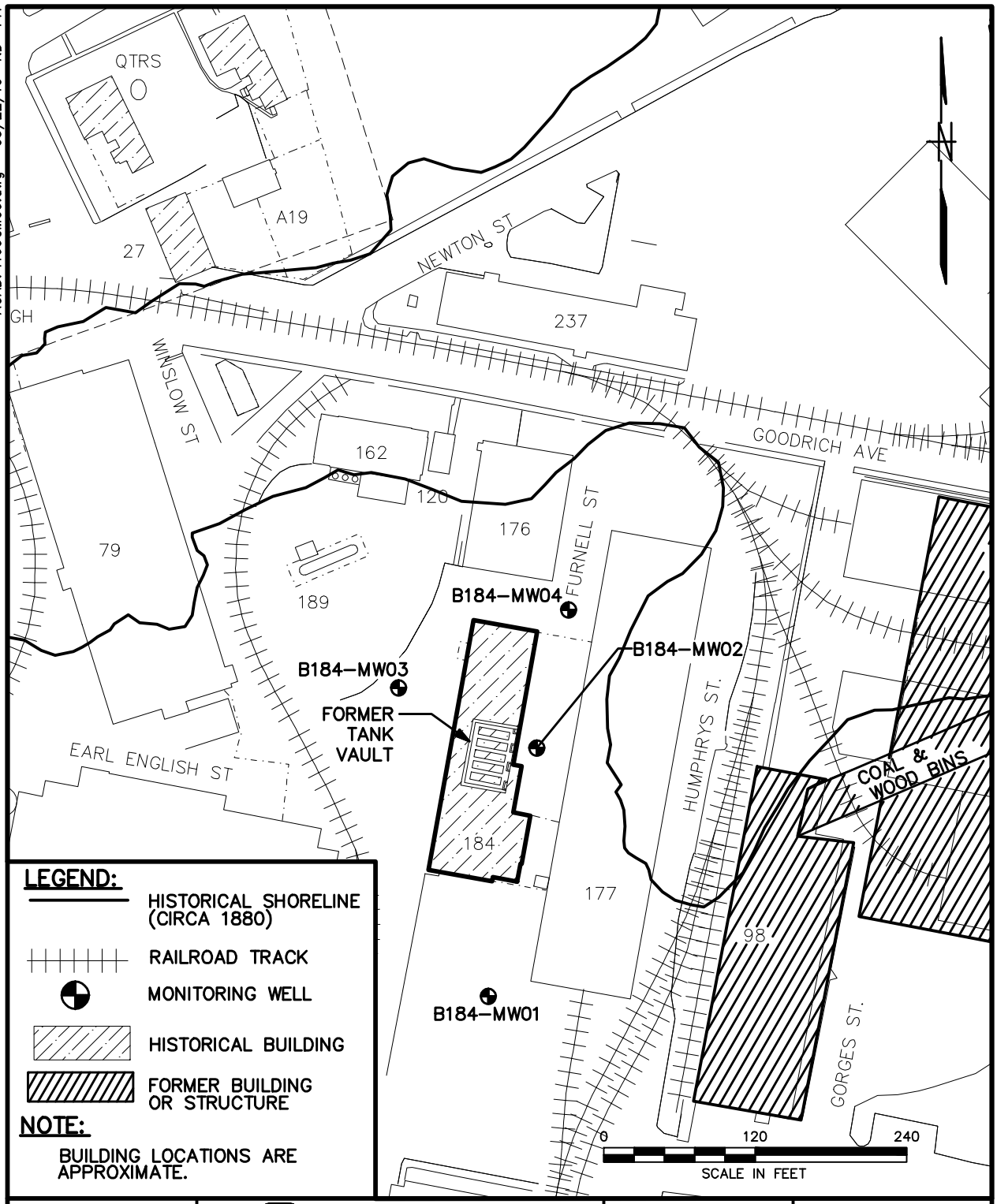

DRAWN BY / DATE	Tetra Tech NUS, Inc.	CONTRACT NO.	OWNER NO.
ND 3/22/10		0383	0055
CHECKED BY / DATE	BUILDING 184 LOCATION MAP SITE 30 PORTSMOUTH NAVAL SHIPYARD KITTERY, MAINE	APPROVED BY / DATE	
COST/SCHED-AREA		APPROVED BY / DATE	
SCALE: AS NOTED		DRAWING NO. FIGURE 2-2	REV. 0

FORM CADD NO. TtNUS_AV.DWG - REV 0 - 1/22/98

ACAD: 4169CP05.dwg 01/25/10 CK PIT

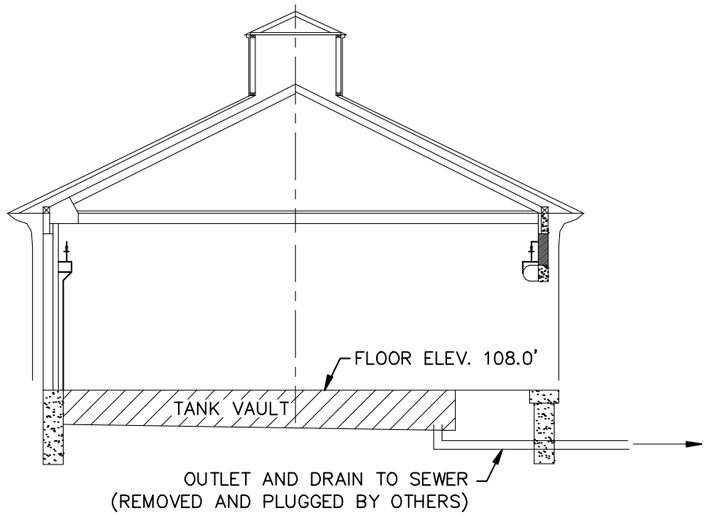

SECTION A–A

0 15 30
SCALE IN FEET

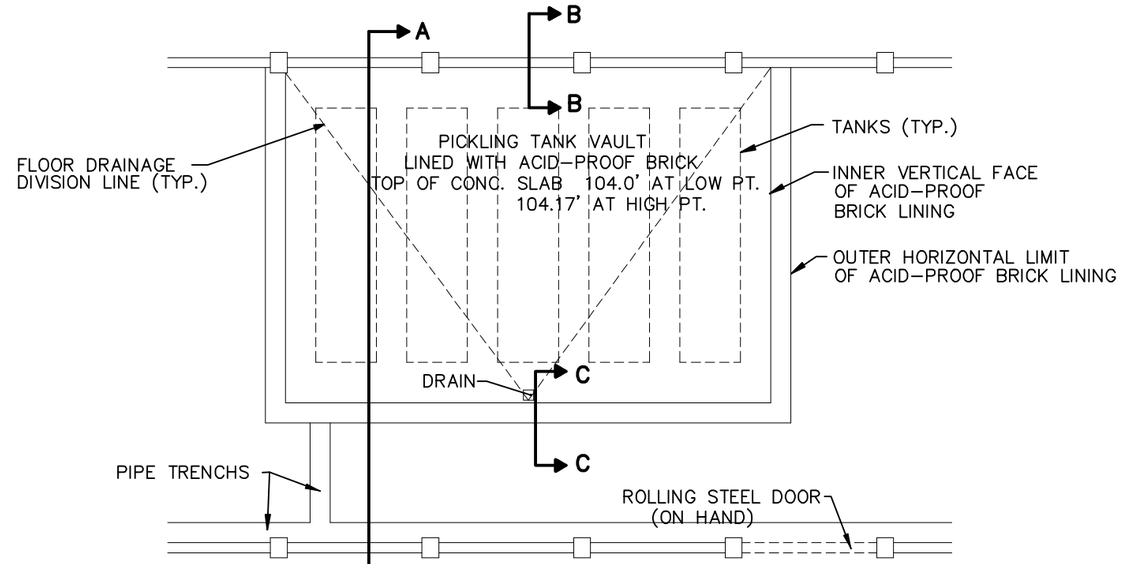

1943 FIRST FLOOR PLAN

0 15 30
SCALE IN FEET

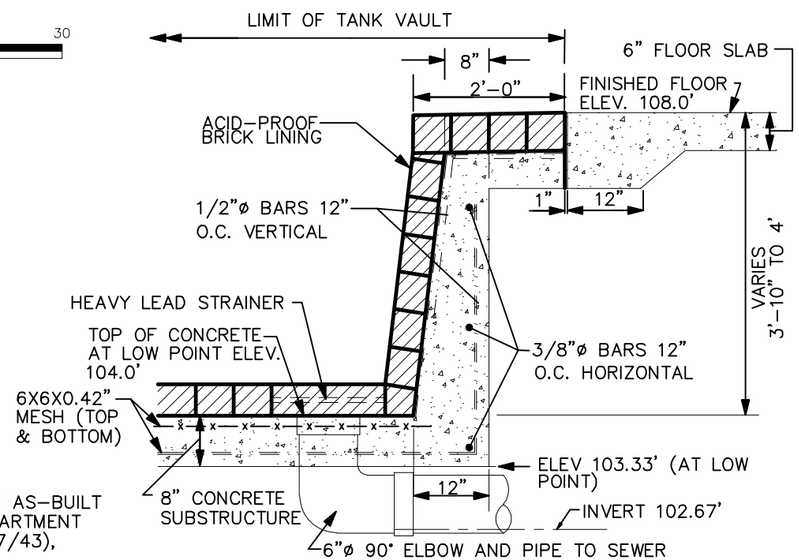

SECTION C–C

N.T.S.

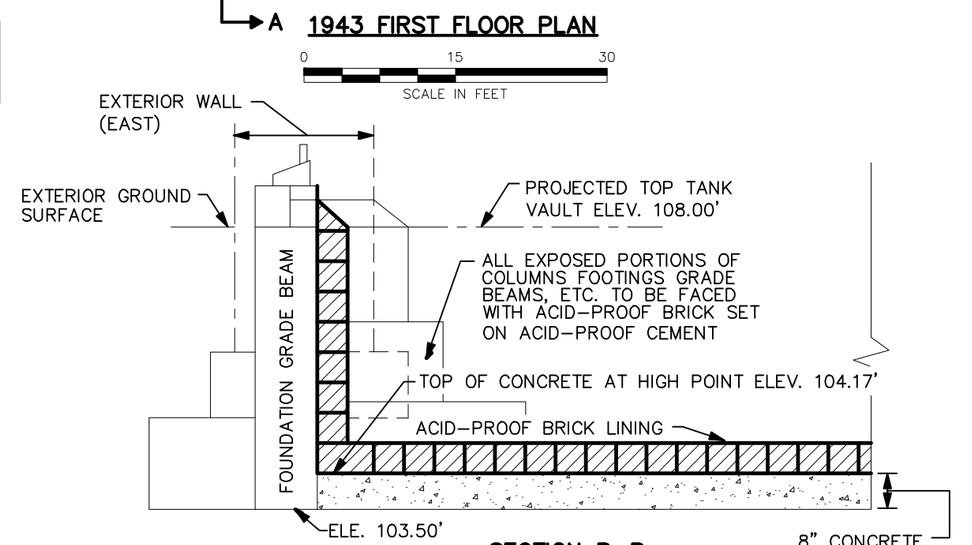

SECTION B–B

N.T.S.

NOTES:

INFORMATION ON THIS FIGURE IS COMPILED FROM AS–BUILT DRAWINGS REVIEWED AT THE PUBLIC WORKS DEPARTMENT AT PNS, DRAWINGS USED ARE: 184–43–11 (6/17/43), 184–43–18 (10/12/43), 184–43–10 (6/5/43), 184–43–3 (3/27/43), 184–43–13 (6/21/43), AND 184–43–2 (3/27/43)

NO.	DATE	REVISIONS	BY	CHKD	APPD	REFERENCES

DRAWN BY DM DATE 5/10/02
CHECKED BY DATE
COST/SCHED–AREA
SCALE AS NOTED

Tetra Tech NUS, Inc.

1943 AS–BUILT BUILDING CONDITIONS
PLAN AND SECTIONS
SITE 30 (BUILDING 184)
PORTSMOUTH NAVAL SHIPYARD
KITTERY, MAINE

CONTRACT NO. 0383
OWNER NO. 0055
APPROVED BY DATE
APPROVED BY DATE
DRAWING NO. **FIGURE 2–3**
REV. 0

FORM CADD NO. TtNUS_BH.DGN – REV 0 – 1/20/98

ACAD: 4169CM07.dwg 01/25/10 CK PIT

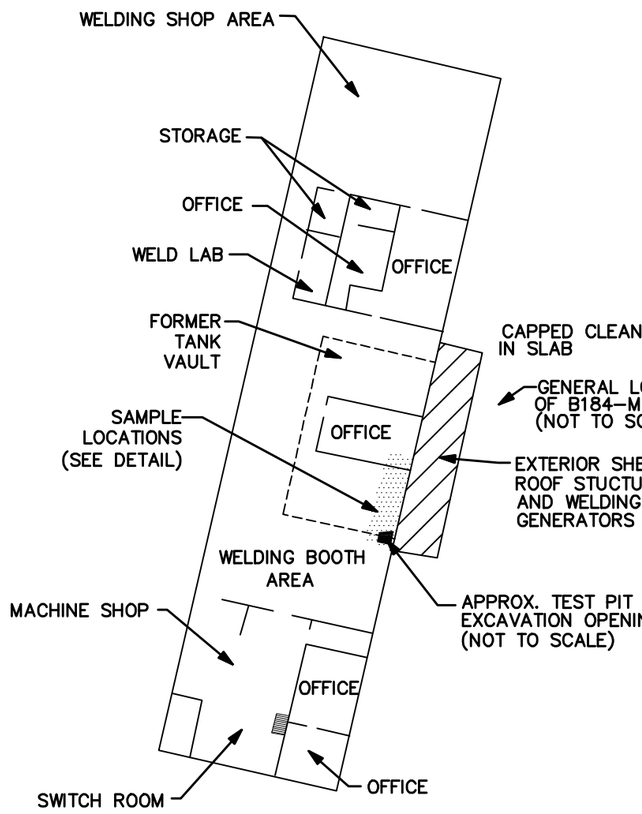

CURRENT LAYOUT
BUILDING 184 (SITE 30)

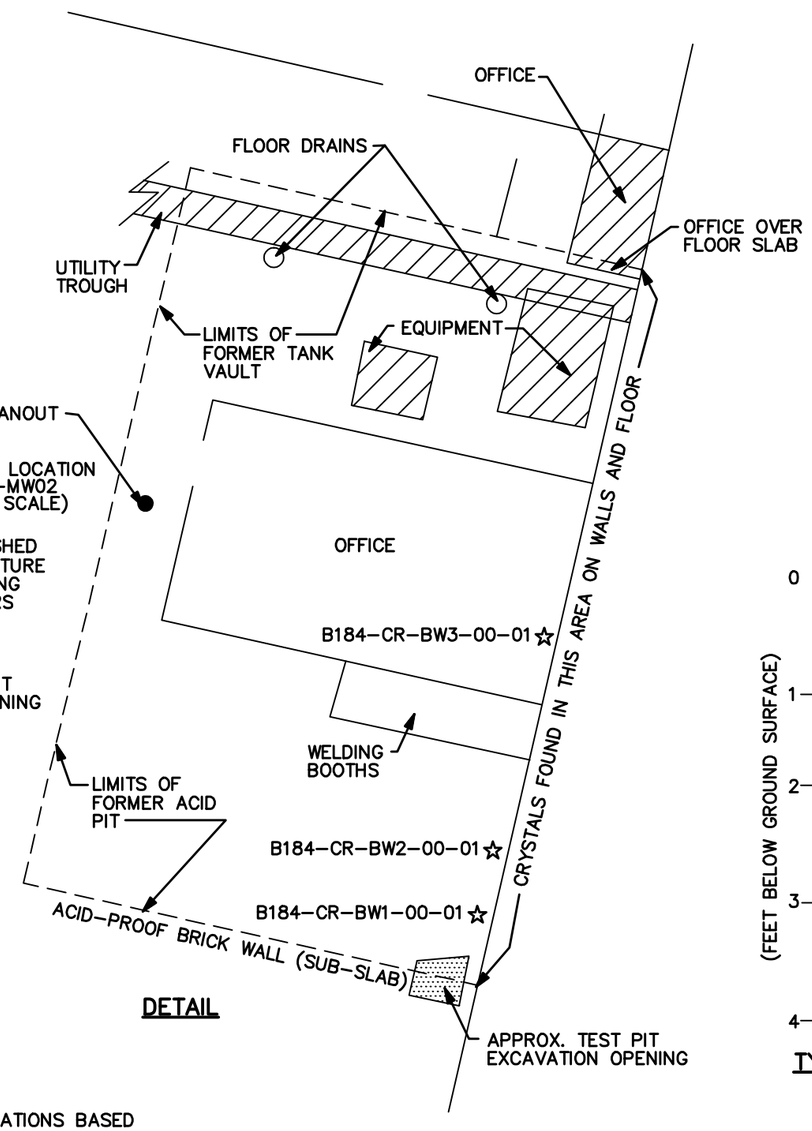

DETAIL

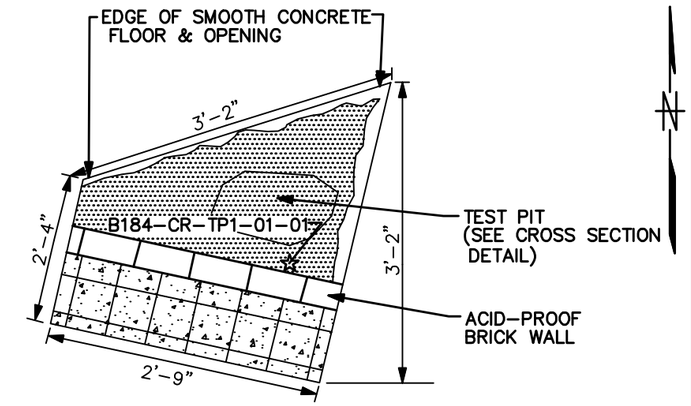

TEST PIT DETAIL IN PLAN VIEW

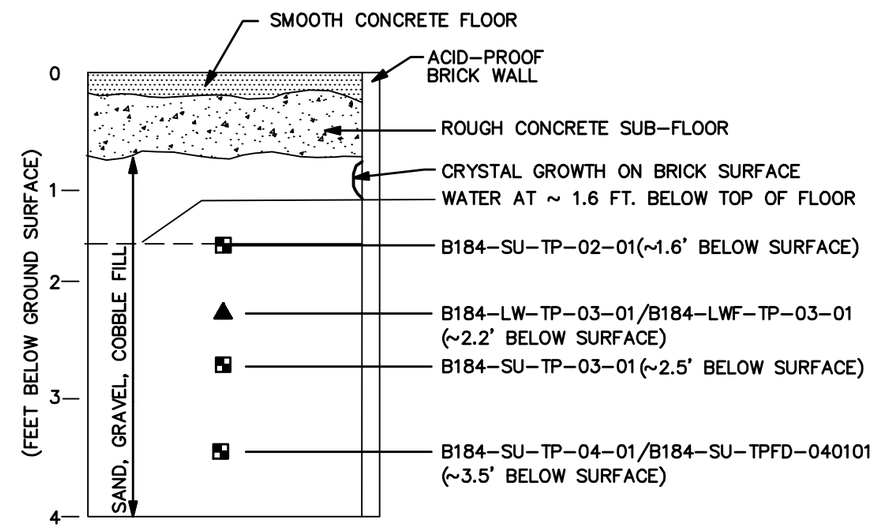

TYPICAL CROSS SECTION DETAIL

LEGEND:

- SOIL SAMPLE
- LIQUID WASTE SAMPLE
- CRYSTAL SAMPLE

NOTE:

NOT TO SCALE – FEATURES ARE ESTIMATED USING LOCATIONS BASED ON NOTES FROM SITE VISIT ON DECEMBER 11, 2001 BY TTNUS.

NO.	DATE	REVISIONS	BY	CHKD	APPD	REFERENCES

DRAWN BY DM DATE 5/10/02
CHECKED BY DATE
COST/SCHED-AREA
SCALE NOT TO SCALE

Tetra Tech NUS, Inc.

GENERAL BUILDING LAYOUT AND TEST PIT MATERIAL PHYSICAL CHARACTERISTICS
SITE 30 (BUILDING 184)
PORTSMOUTH NAVAL SHIPYARD
KITTERY, MAINE

CONTRACT NO. 0383
OWNER NO. 0055
APPROVED BY DATE
APPROVED BY DATE
DRAWING NO. FIGURE 2-4
REV. 0

FORM CADD NO. TtNUS_BH.DGN - REV 0 - 1/20/98

3.0 IDENTIFICATION OF REMOVAL ACTION OBJECTIVES

RAOs are developed to determine guidance for the removal action and to ensure that the action complies with regulatory requirements. This section provides an identification of Applicable or Relevant and Appropriate Requirements (ARARs), identification of RAOs, a discussion of the removal action scope, and a proposed schedule.

3.1 APPLICABLE OR RELEVANT AND APPROPRIATE REQUIREMENTS

ARARs are regulatory requirements and guidance that may potentially govern remedial activities and are defined as follows:

- any standard, requirement, criterion, or limitation under federal environmental law; or
- any promulgated standard, requirement, criterion, or limitation under a state environmental or facility-siting law that is more stringent than the associated federal standard, requirement, criterion, or limitation, that either is legally applicable to the CERCLA hazardous substance(s) at the site or is relevant and appropriate under the circumstances of the hazardous substance release.

One of the primary concerns during the development of RAOs for hazardous waste sites under CERCLA or Superfund is the degree of human health and environmental protection afforded by a given remedy. Section 121 of CERCLA requires that primary consideration be given to remedial alternatives that attain or exceed ARARs. The purpose of this requirement is to ensure that CERCLA response actions are consistent with other pertinent federal and state environmental requirements.

Definitions of the two types of ARARs, as well as To Be Considered (TBC) criteria, are as follows:

- Applicable requirements are those cleanup standards, standards of control, and other substantive environmental protection requirements, criteria, or limitations promulgated under federal or state law that specifically address a hazardous substance, pollutant, contaminant, remedial action, location, or other circumstance at a CERCLA site.

- Relevant and appropriate requirements are those cleanup standards, standards of control, and other substantive environmental protection requirements, criteria, or limitations promulgated under federal or state law that, although not "applicable," address problems or situations sufficiently similar (relevant) to those encountered at the CERCLA site, that their use is well suited (appropriate) to the particular site.

- TBC criteria are non-promulgated, non-enforceable guidelines or criteria that may be useful for developing remedial action alternatives and for determining action levels that are protective of human health and/or the environment. Examples of TBC criteria include USEPA Drinking Water Health Advisories, carcinogenic potency factors, and reference doses.

ARARs and TBCs can be divided into three categories, although many requirements are combinations of the three types of ARARs and TBCs. These categories are as follows:

- Chemical specific: Health- or risk-based numerical values or methodologies that establish concentration or discharge limits for particular contaminants. In absence of ARARs, site-based criteria may be developed using guidance provided under USEPA risk Reference Dose (RfD) guidance or USEPA Human Health Assessment Group Cancer Slope Factor (CSFs).

- Location specific: Restrictions based on the concentrations of hazardous substances or the conduct of activities in specific locations. These may restrict or preclude certain remedial actions or may apply only to certain portions of sites. Location-specific ARARs pertain to special site features. Examples of location-specific ARARs include historic preservation requirements for buildings.

- Action specific: Technology- or activity-based controls or restrictions on activities related to management of hazardous substances. Action-specific ARARs pertain to implementing a given remedy.

Chemical- and location-specific ARARs and TBCs for Site 30 are presented in Tables 3-1 and 3-2, respectively. Action-specific ARARs and TBCs are discussed with the removal action alternatives descriptions presented in Section 4.0.

3.2 REMOVAL ACTION OBJECTIVES

The following RAO for Site 30 was developed based on the potential risks as discussed in Section 2.5.

- Mitigate human health and environmental risks associated with the tank vault in a manner such that the property can be used for unrestricted use/unlimited exposure.

3.3 REMOVAL ACTION SCOPE

The focus of this EE/CA and a subsequent removal action is the former acid tank vault contents and the crystals growing within the building and former acid tank vault. Based on the physical dimensions provided in the 1943 as-built drawings and the results of the single test pit excavation, an estimated

400 cubic yards (cy) of former acid tank vault fill material, brick and concrete lining, existing concrete floor, and crystalline growth are expected to be present at Site 30. The estimate of tank vault contents is presented in the conceptual design calculations in Appendix C. The volume of existing crystals that may be present below the herculite liner is expected to be less than 1 cy.

3.4 REMOVAL ACTION SCHEDULE

The Navy completed moving personnel and required equipment from Building 184. Therefore, it is anticipated that work plans for the removal action would be prepared and submitted fall or winter 2010/2011 and that construction would commence winter 2010/2011.

TABLE 3-1

CHEMICAL-SPECIFIC ARARs AND TBCs[1]
SITE 30 EE/CA
PORTSMOUTH NAVAL SHIPYARD, KITTERY, MAINE

Medium/Activity	Requirement/Citation	Status	Synopsis	Evaluation/Action To Be Taken
FEDERAL				
Acid Crystals	RCRA Subtitle C – Identification and Listing of Hazardous Wastes (40 CFR 261)	TBC	These requirements identify criteria (maximum concentrations, ignitability, corrosivity, etc.), which would render wastes hazardous because of RCRA characteristics.	This guidance was considered in the human health risk assessment for the acid crystals. These crystals are considered potentially corrosive to exposed human skin because of its pH is below the RCRA characteristic limit of 2.0.
Vault Water	USEPA Human Health Assessment Group CSFs from IRIS	TBC	CSFs present the most up-to-date information on cancer risk potency for known and suspected carcinogens.	CSFs were used to calculate PNS-specific construction worker risk screening levels for exposure to contaminants in groundwater. The screening levels were used to evaluate potential risks for exposure to water in the tank vault.
Vault Water	USEPA Risk RfDs from IRIS	TBC	RfDs are estimates of daily exposure for human populations (including sensitive subpopulations) considered unlikely to cause significant adverse health effects associated with a threshold mechanism of action in human exposure over a lifetime.	RfDs were used to calculate PNS-specific construction worker risk screening levels for exposure to contaminants in groundwater. The screening levels were used to evaluate potential risks for exposure to water in the tank vault.

TABLE 3-1

CHEMICAL-SPECIFIC ARARs AND TBCs(1)
SITE 30 EE/CA
PORTSMOUTH NAVAL SHIPYARD, KITTERY, MAINE

Medium/Activity	Requirement/Citation	Status	Synopsis	Evaluation/Action To Be Taken
STATE				
Vault Water	Revised Guidance for Human Health Risk Assessments for Hazardous Substance Sites n Maine, State of Maine Department of Environmental protection and Center for Disease Control, July 2009.	TBC	This guidance manual provides acceptable carcinogenic and non-carcinogenic risk levels ($1x10^{-5}$ and 1, respectively).	This guidance manual can be used for risk management decisions at Site 30.

1 No chemical-specific ARARs were identified for the Site 30 EE/CA

ARAR – Applicable or Relevant and Appropriate Requirement
CFR – Code of Federal Regulations
CSF – Cancer Slope Factor
IRIS – Integrated Risk Information System
MEDEP – Maine Department of Environmental Protection
PNS – Portsmouth Naval Shipyard
RCRA – Resource Conservation and Recovery Act
RfD- Reference Dose
SSL – Soil Screening Level
TBC – To Be Considered
USEPA – United States Environmental Protection Agency

TABLE 3-2

LOCATION-SPECIFIC ARARs AND TBCs
SITE 30 EE/CA
PORTSMOUTH NAVAL SHIPYARD, KITTERY, MAINE

Requirement	Citation	Status	Synopsis	Evaluation/Action To Be Taken
FEDERAL				
Historic Preservation	National Historic Preservation Act (16 USC 470 et seq., 36 CFR 800)	Applicable	Provides requirements relating to potential loss or destruction of significant scientific, historical, or archaeological data due to remedial actions at a site.	Historical archeological resource sensitivity for Site 30 suggests the potential presence of items of historical value. If excavation activities are included in a remedial action at Site 30, measures would be needed to protect resources of historical value, if present.

ARAR – Applicable or Relevant and Appropriate Requirement
CFR - Code of Federal Regulations
TBC – To Be Considered
USC - United States Code

4.0 IDENTIFICATION, DEVELOPMENT, AND ANALYSIS OF REMOVAL ACTION ALTERNATIVES

4.1 IDENTIFICATION AND DEVELOPMENT OF ALTERNATIVES

Several technologies and process options were evaluated to assemble alternatives that would achieve the RAOs for Site 30. Table 4-1 summarizes the technology screening process. The following is a summary of the technologies (with descriptions) retained from the technology screening process for development into removal action alternatives:

- **No action** - The no action response is retained as required by the NCP. The no action response provides a comparative baseline against which other alternatives can be evaluated. Under this response, no remedial action is taken. The contaminated medium is left "as is" without the implementation of any monitoring, land use controls, containment, removal, treatment, or other mitigating actions.

- **Removal (Excavation)** – Removal is used to remove a contaminated medium from its current location for treatment and return to the site, for treatment and disposal elsewhere, or for disposal elsewhere without treatment. Removal actions are combined with other technologies such as treatment or disposal to develop remedial alternatives.

- **Disposal (Off-yard Landfilling/Recycling)** - Disposal actions include placement of excavated materials within a permanent, approved, and permitted disposal facility. Disposal actions are combined with removal actions and could be combined with treatment actions to develop alternatives. Although the location of the contaminant may change, the toxicity, mobility, and volume of the contaminants are not reduced through the implementation of disposal without a treatment process.

These technologies were used to develop two removal action alternatives. These alternatives are discussed in the following sections. Because the RAO developed is to remediate Site 30 for un-restricted residential use and because of the types (fill, bricks, concrete) and small volume of contaminated material, excavation and disposal were the only available technologies to develop into remedial alternatives. Therefore, additional alternatives were not developed for evaluation.

4.1.1 <u>Alternative 1 – No Action</u>

It is assumed that no remedial action would be taken for this alternative at the former tank vault and that any occasional actions that may have been taken in the past (i.e., crystal growth removal) would not

continue. As outlined in CERCLA guidance for the evaluation of remedial alternatives, the No Action response provides a comparative baseline against which other alternatives can be evaluated. The contaminated media would be left in place, without the implementation of any additional containment, removal, treatment, or other mitigating actions. The No Action alternative does not provide for the implementation of administrative or institutional controls to reduce the potential for exposure.

4.1.2 Alternative 2 – Excavation and Off-yard Disposal

This alternative would involve the excavation and removal of all tank vault contents, lining materials, drain, and associated contaminated soil. Figure 4-1 depicts this conceptual layout of the alternative. Following excavation, the site would be backfilled and restored to the desired use or pre-removal action conditions. Quantity calculations (excavation/backfill volume estimates, site restoration area, and volume estimates, etc.) and excavation areas assumed for the costing of this alternative are provided in Appendix C. Specific design considerations would be provided in the removal action design document or removal action work plan document.

The main construction tasks used to implement Alternative 2 consist of the following:

- Concrete Floor Removal – Currently there is a concrete floor that covers the former tank vault. After the removal of all Navy equipment (performed by the Navy during the welding school move) all remaining office equipment and welding equipment would be removed from the area above the former tank vault. Following the cleaning of the area the concrete floor over the former tank vault would be removed. For purposes of this EE/CA it is assumed that remaining office and welding equipment would be easily moved and that the removal of the concrete slab would be performed using equipment capable of entering Building 184. This material would be stockpiled for characterization and loaded into trucks for off-yard disposal. For purposes of this EE/CA it is assumed that this material would be disposed of within a permitted, Navy approved, off-yard hazardous waste disposal facility.

- Water Removal – Following, or prior to, the removal of the concrete slab above the former tank vault, the liquid in the tank vault would be removed using a well point. The removed water would be containerized for characterization and off-yard disposal. For purposes of this EE/CA it is assumed that this water would be disposed of as non-hazardous waste within a permitted, Navy approved, disposal/treatment facility.

- Excavation – Following the removal of the concrete floor and the removal of the liquid from within the former tank vault, the sandy material reportedly used to fill in the former tank vault would be excavated using equipment capable of entering Building 184. This material would be stockpiled for

characterization and loaded into trucks for off-yard disposal. For purposes of this EE/CA it is assumed that this material would be disposed of within a permitted, Navy approved, off-yard hazardous waste disposal facility.

- Tank Vault Brick Liner Removal – Following the removal of the sandy material used to fill the former tank vault, the acid proof brick lining on the tank vault walls and floor would be removed, using equipment capable of entering Building 184. Based on construction drawings the tank vault walls and floors are concrete overlaid with one layer of acid proof bricks. The acid proof bricks would be removed, stockpiled for characterization, and disposed off-yard. For purposes of this EE/CA, it is assumed that the acid proof brick would be disposed of within a permitted, Navy approved, off-yard hazardous waste disposal facility.

- Tank Vault Concrete Liner Inspection and Removal - Following the removal of the acid proof brick, the concrete floor and walls would be inspected for staining and to determine if any breaches in the acid proof brick have occurred. The concrete tank vault floor and the three walls in the interior of the building that do not act as part of the foundation would be removed, using equipment capable of entering Building 184. Portions of the concrete that show staining (if any) would be removed and stockpiled separately from the concrete not showing signs of staining. Both stockpiles would be characterized for off-yard disposal. For purposes of this EE/CA, it is assumed that the removed concrete floor and walls would show no signs of staining and would be disposed of within a permitted, Navy approved, off-yard solid waste disposal facility (non-hazardous). Following concrete tank vault floor removal the former drain piping, if found would be removed to the limits of the excavation, then plugged and capped.

- Wall Washing – Due to the construction of the building, the eastern tank vault concrete wall is also a portion of the Building 184 foundation wall. Therefore, the tank vault removal would not include the eastern concrete tank vault wall. This wall would be inspected and would be power washed if needed to remove any contamination. For the purposes of this EE/CA it is assumed that a structural engineer would take part in the inspection of this wall prior to the removal of other concrete tank vault walls and floor, to determine if portions of the north and south tank vault wall and portions of the tank vault floor would need to remain in place for building stability.

- Confirmation Sampling – Following the complete removal of the tank vault, confirmation samples will be collected from the exposed soil walls and floor to determine if additional action needs to be conducted. For the purposes of this EE/CA confirmation sampling would include the collection of one composite soil sample from the three exposed soil walls, and two composite soil samples from the exposed soil floor. Three wipe/chip samples would be collected from the remaining concrete wall.

The samples would be analyzed for TAL Metals and TCLP. In the event that the results of confirmation sampling indicate that the soil under the tank has been impacted, the Navy and regulators would discuss if further actions would be required to achieve site closeout. A confirmation sampling plan would be prepared as part of the implementation of this alternative and this document would indicate the actual number and types of samples collected to verify the removal of the tank vault and associated contaminants.

- Characterization Sampling – Materials removed from within and around the former tank vault would be characterized for disposal using TCLP and any other methods required by the selected disposal facility or facilities. A characterization sampling plan would be prepared as part of the implementation of this alternative and this document would indicate the actual number and types of samples collected to determine the appropriate disposal methods.

- Restoration – Following confirmation of the tank vault removal and the removal of any associated contamination (if found), the excavation would be backfilled using certified clean common fill material and the concrete floor would be replaced.

The action-specific ARARs associated with Alternative 2 are presented in Table 4-2.

4.2 EVALUATION CRITERIA

The following criteria were used to evaluate the removal action alternatives (Alternatives 1 and 2):

- Effectiveness: Short-term and long-term protection of human health and the environment, the degree of protection achieved, and the reliability of the alternative.

- Implementability: The degree of difficulty of implementation, associated risks and limitations, feasibility, and limitations of the technology process.

- Cost: Removal action costs including capital cost and maintenance cost.

4.3 EVALUATION OF ALTERNATIVES

4.3.1 Alternative 1 – No Action

Effectiveness

The No Action alternative would not meet the RAO for the site. The source of the crystals and impacted pit material would not be removed or treated; therefore, acidic constituents would continue to be

transported to the surface through crystal growth, thereby increasing risk to human receptors. Moreover, fill material within the tank vault and the tank vault lining material would continue to pose a future potential threat of release of contaminants to the groundwater at the site.

Implementability

The No Action alternative is immediately implementable. No implementability concerns exist.

Cost

No cost is associated with this alternative.

4.3.2 Alternative 2 – Excavation and Off-yard Disposal

Effectiveness

Alternative 2 would be effective in eliminating the source and mechanisms of crystalline growth and would effectively eliminate long-term risk to human health and the environment. All contaminated material would be removed and properly disposed.

Implementability

Removal of the floor slab and excavation of waste and associated contaminated soils is routinely performed by experienced contractors using commonly available equipment for site remediation work. Excavation is applicable to almost all site conditions. Depths from approximately 3 to 4 feet are being considered for removal at this site.

The complete removal of all facilities within the limits of the former tank vault and the excavation of all tank vault fill, acid-proof brick lining, concrete substructure, and concrete floor over the former tank vault would render the area unusable for the duration of the project. Complete excavation and restoration of the area would be expected to take two to three months. Full use of the interior and exterior of the building can be restored upon completion of this alternative.

Due to the implementation of the alternative within a building, the interior clearance within the building would create restrictions on the type of equipment use and the need to establish ventilation and a dust suppression system. Many effective pieces of smaller equipment could be used to perform this remedy and ventilation and dust suppression systems are commonly employed.

Cost

The estimated costs for Alternative 2 would be as follows:

Capital: $1,023,000
Operation and Maintenance (O&M): Not applicable
Present worth: $1,023,000

Details of the cost estimates are provided in Appendix D. Quantities and assumptions supporting the cost estimate are provided in Appendix C.

4.4 COMPARISON OF ALTERNATIVES

The removal action alternatives were compared to each other using the same criteria used in the evaluation of each alternative in the previous section (i.e., effectiveness, implementability, and cost).

4.4.1 Effectiveness

Alternative 1 would not meet the RAO for Site 30. Alternative 2 would be the most effective alternative based on the complete excavation and removal of all former tank vault contents. Alternative 2 would minimize future crystal growth and reduce or eliminate the source of potential release of contaminants to groundwater thereby meeting the RAO for the site.

4.4.2 Implementability

Alternative 1 would not require any implementation and would therefore be the easiest to implement. Alternative 2 would be more difficult to implement than Alternative 1; however, the facilities, equipment, and procedures required to implement Alternative 2 are readily available. Alternative 2 would require increased traffic through PNS but would not disturb any facility activities.

The interior clearance within the building would create restrictions to the use of large excavation equipment for Alternatives 2.

4.4.3 Cost

Alternative 1: $0
Alternative 2: $1,023,000

A summary of the comparison of the alternatives is provided in Table 4-3.

TABLE 4-1

SCREENING OF TECHNOLOGIES AND PROCESS OPTIONS
SITE 30 EE/CA
PORTSMOUTH NAVAL SHIPYARD, KITTERY, MAINE

General Action	Technology	Process Options	Description	General Screening	
No Action	No Action	No Action	No activities conducted at site to address contamination.	Retain for baseline comparison.	Retained
Minimal Action	Institutional Controls	LUCs	Administrative action used to restrict future site activities.	LUCs would be required to prohibit exposure to contaminated material if the tank vault were to remain in place. However, achieving the RAO of unrestricted use will eliminate the need to implement LUCs.	Eliminated
	Monitoring	Groundwater Monitoring	Sampling and analysis to evaluate the potential migration of contaminants to groundwater.	Groundwater monitoring is viable for assessing the effectiveness of containment or treatment measures, during and following remediation.	Retained
	Scrubbing	Pressure Washing	Pressure washing surfaces, which can not be excavated, to remove contaminants.	Because one of the tank vault walls is a load bearing wall for Building 184 this wall cannot be removed. As a result, any residual contamination found on this wall must be washed from the wall.	Retained
Containment	Capping	Capping	Capping is the use of impermeable materials (e.g., concrete, grout) to cover the tank vault fill material.	An impermeable cover would be successful in preventing capillary movement of water out of the fill. However, this option would not be compatible with current and planned uses of the building.	Eliminated
		Waterproofing	Use of waterproofing, coating, or sealing material to prevent surface runoff from entering tank vault.	May be useful in reducing the accumulation of water in the tank vault although the pathway from surface water runoff has not been determined.	Eliminated

TABLE 4-1

SCREENING OF TECHNOLOGIES AND PROCESS OPTIONS
SITE 30 EE/CA
PORTSMOUTH NAVAL SHIPYARD, KITTERY, MAINE

General Action	Technology	Process Options	Description	General Screening	
Containment (Continued)	Lining (Bottom/Sides)	Liner/Waterproofing	Placement of an impervious synthetic material to line the bottom of the tank vault to provide a barrier to vertical migration and use of water proofing on side walls to provide a barrier to horizontal migration of water.	A liner or waterproofing cannot be installed with fill material in place, and removing the fill material would require a greater disruption of building activities compared to water proofing the outside of the building. Conversely, if the building is vacated, this technology does not offer a significant advantage over removal of the tank vault fill material.	Eliminated
Removal	Bulk Excavation	Excavation/Scraping/ Chipping	Mechanical removal of solid materials using construction equipment or hand-operated tools.	Excavation would be effective at removing contaminated fill and bricks; however, it would require a vacant building. Scraping/chipping would be effective in removing crystals from the floor	Retained
Disposal	Landfill	Hazardous or Nonhazardous Waste Landfill	Disposal of excavated material or wastes from treatment in an off-site landfill.	Off-yard non-hazardous waste landfills may be utilized as a primary technology for disposal of tank vault fill material. As a secondary technology, off-yard hazardous waste landfills may be used for disposal of crystals, concentrated residuals from fill, or waste treatment residues. Eliminate on-site landfilling because suitable area is not available.	Retained
	Recycling and Salvage	Recycling and Salvage	Recycling of fill material components instead of disposal.	No recyclable material is expected from this site.	Eliminated
	Consolidation	Consolidation	Segregation of wastes for administrative purposes or technical reasons.	Segregation of tank vault fill material is not expected to offer any benefit.	Eliminated

TABLE 4-1

SCREENING OF TECHNOLOGIES AND PROCESS OPTIONS
SITE 30 EE/CA
PORTSMOUTH NAVAL SHIPYARD, KITTERY, MAINE

General Action	Technology	Process Options	Description	General Screening	
Disposal (Continued)	Beneficial Reuse	Beneficial Reuse as Fill Material	On-site reuse of treated fill.	Beneficial reuse as fill material for returning treated material to the site as backfill material. This option would not be economical based on the limited size and volume of the former acid-proof tank vault contents.	Eliminated
Ex-Situ Treatment	Physical/ Chemical	Chemical Fixation/ Solidification	Immobilization of constituents of crystal growth by reacting with cement, fly ash, kiln dust, and other additives followed by formation of a solid matrix.	Solidification is feasible for minimizing the solubility of crystal constituents, which are inorganics. Bricks would have to be crushed for effectiveness. This option would not be economical based on the limited size and volume of the former acid-proof tank vault contents.	Eliminated
	Physical/ Chemical	Soil Washing/Solvent Extraction	Separation of contaminants from a medium by intimate contact with water and/or alkaline extractant.	Removal of crystal constituents from the source is feasible. This option would generate residual material and has limited benefit over disposal without washing.	Eliminated
		Dewatering	Removal of free water from wastes using gravity (dewatering pad) or equipment such as a filter press.	Dewatering would be required prior to disposal of saturated contaminated fill or backfilling of treated material from soil washing.	Retained
	Thermal	Incineration/Low-Temperature Thermal Stripping	Volatilization and oxidation of organic compounds via conveyance through high temperature.	This technology is not generally applied to non-hazardous wastes and is not applicable to inorganic contaminants.	Eliminated

TABLE 4-1

SCREENING OF TECHNOLOGIES AND PROCESS OPTIONS
SITE 30 EE/CA
PORTSMOUTH NAVAL SHIPYARD, KITTERY, MAINE

General Action	Technology	Process Options	Description	General Screening	
Ex-Situ Treatment (Continued)	Biological	Landfarming/Bioslurry Treatment	Tilling of contaminated material in layers or treatment of contaminated material in a slurry reactor to remove VOCs and biodegrade organics.	Not applicable to inorganic contaminants.	Eliminated
	Chemical	Neutralization	Use of bases to counteract low pH.	Could be used for both the liquid phase and solid phase. Has been considered under soil washing/solvent extraction. This option is considered under the in-situ options.	Eliminated
		Dechlorination	Use of chemicals to remove chlorine from chlorinated compounds.	This technology is effective for concentrated halogenated compounds and not applicable to inorganic contaminants.	Eliminated
		Oxidation	Use of strong oxidizers such as ozone, peroxide, chlorine, or permanganate to chemically oxidize materials.	Not applicable to inorganic contaminants.	Eliminated
	Solids Processing	Crushing and Grinding	Use of crushing and grinding to reduce the size of an object.	Crushing and grinding may be required for alternatives that involve treatment of excavated material.	Retained
Ex-Situ Treatment (Continued)	Solids Processing (Continued)	Magnetic Separation	Separation of ferromagnetic debris.	Magnetic separation is not expected to be viable for fill material because significant ferromagnetic materials are not expected to be present.	Eliminated
		Screening	Separation of material into fractions of the same size by passing through screens or mesh.	Screening may be warranted for alternatives that involve excavation.	Retained

TABLE 4-1

SCREENING OF TECHNOLOGIES AND PROCESS OPTIONS
SITE 30 EE/CA
PORTSMOUTH NAVAL SHIPYARD, KITTERY, MAINE

General Action	Technology	Process Options	Description	General Screening	
In-Situ Treatment	Thermal	Vitrification/Radio Frequency/ Electromagnetic/ Electrical Resistance Heating; Immersion Heaters/Steam Injection/Hot Air Injection	Melting of solids using electrically generated heat to glassify metals and combust organics.	High temperatures would likely damage building and utilities. Thermal processes typically applied to organic contaminants.	Eliminated
	Biological	Biosparging/ Bioremediation	Air is injected into the groundwater to provide oxygen to promote aerobic degradation.	Biological processes are not applicable to inorganic contamination.	Eliminated
	Dewatering	Pumping	Water is pumped from tank vault for treatment, disposal, or re-use.	Removal of water will be necessary to prevent crystal growth within building. Low pH will require additional treatment prior to disposal.	Retained
In-Situ Treatment (Continued)	Physical/ Chemical	Soil Flushing	Flushing of contaminants using injection and extraction well system and above-ground treatment system.	Water that is removed and neutralized can be returned to the tank vault to further neutralize and/or extract acidity. Alternatively, clean water can be returned to the tank vault and subsequently removed and treated. Pilot-scale studies would be required for determining design and operational parameters.	Eliminated
		Vapor Extraction	Removal of VOCs using an induced vacuum created by an extraction well system.	Not applicable to inorganics.	Eliminated

TABLE 4-1

SCREENING OF TECHNOLOGIES AND PROCESS OPTIONS
SITE 30 EE/CA
PORTSMOUTH NAVAL SHIPYARD, KITTERY, MAINE

General Action	Technology	Process Options	Description	General Screening	
	Physical/ Chemical	Chemical Fixation/Solidification	Pressure injection of cement or other pozzolanic materials and/or additives to immobilize constituents of crystal growth and to promote formation of an impermeable solid. Alternatively, concrete floor can be removed and cement/pozzolans/ additives mixed in place.	Pilot tests would be needed to determine quantity of grout, chemical additives, and number/spacing of injection points. Mixing in place after removal of the floor would allow better monitoring and testing of mixing and setting of fill material within the tank vault. However, crystal constituents that are absorbed in the bricks may not be effectively fixated.	Eliminated

LUCs – Land Use Controls
VOCs – Volatile Organic Compounds

TABLE 4-2

ALTERNATIVE 2: EXCAVATION AND OFF-YARD DISPOSAL
ACTION SPECIFIC ARARs AND TBCs
SITE 30 EE/CA
PORTSMOUTH NAVAL SHIPYARD, KITTERY, MAINE

Medium/Activity	Requirement/Citation	Status	Synopsis	Evaluation/Action To Be Taken
FEDERAL ACTION-SPECIFIC ARARs and TBCs				
Hazardous Waste	RCRA Subtitle C – Standards for Hazardous Waste (TSD) Facilities (40 CFR 264)	Applicable	Establishes standards for acceptable management of hazardous waste.	These standards would pertain to off-yard waste disposal facilities. Wastes generated during remedial actions would be disposed at appropriately licensed and permitted facilities.
	Land Disposal Restrictions (40 CFR 268)	Applicable	Applicable to alternatives involving land disposal of hazardous wastes and requires treatment to diminish a waste's toxicity and/or minimize contaminant migration. Treatment standards are provided.	Pertains to offsite waste disposal facilities. Wastes generated during remedial actions would be disposed at appropriately licensed and permitted facilities.
Solid Waste/Remediation Activities	RCRA Subtitle C – Identification and Listing of Hazardous Wastes (40 CFR 261)	Applicable	These requirements identify criteria (maximum concentrations, ignitability, corrosivity, etc.), that would render wastes hazardous because of RCRA characteristics.	Wastes generated during remedial actions, if any, would be analyzed to determine whether they are RCRA characteristic hazardous waste. If analytical results exceed the standards in 40 CFR 261, the waste would be managed in accordance with RCRA Subtitle C requirements.
	RCRA Standards (40 CFR 264, Subpart S)	Relevant and Appropriate	Provides special standards for cleanup at Corrective Action Management Units.	This requirement is potentially relevant and appropriate for management of remediation wastes (i.e., staging piles) if remedial action involves excavation and staging of hazardous wastes at Site 30.
	RCRA Subtitle C – Miscellaneous Unit Requirements/40 CFR 264, Subpart X	Applicable	These requirements apply to owners and operators of facilities that treat, store, or dispose of hazardous waste in miscellaneous units.	If miscellaneous units are used to treat or store materials that are hazardous wastes, the units would be managed according to these requirements.

TABLE 4-2

ALTERNATIVE 2: EXCAVATION AND OFF-YARD DISPOSAL
ACTION SPECIFIC ARARs AND TBCs
SITE 30 EE/CA
PORTSMOUTH NAVAL SHIPYARD, KITTERY, MAINE

Medium/Activity	Requirement/Citation	Status	Synopsis	Evaluation/Action To Be Taken
Solid Waste	RCRA Subtitle D (40 CFR 258)	Applicable	Applicable to the management and disposal of non-hazardous wastes.	These regulations would be relevant and appropriate if soil disposed off-yard is non-hazardous.
Health and Safety	OSHA Regulations, General Industry Standards 29 USC Sections 651-678	Applicable	Requires establishment of programs to assure worker health and safety, including employee training requirements.	These regulations would apply to response activities.
Air Emissions	Air/Superfund National Technical Guidance EPA 450/1-89/001-EPA 450/1-89/004	Applicable	This guidance describes methodologies for predicting risks due to air releases at a Superfund site.	These guidance documents would be considered for air releases of fugitive dust during excavation.
	CAA Regulations, NAAQSs\ 40 CFR Part 50	Applicable	Establishes primary (health-based) and secondary (welfare-based) air quality standards for carbon monoxide, lead, nitrogen dioxide, particulate matter, ozone, and sulfur oxides emitted from a major source of air emissions. The NAAQSs form the basis for regulations promulgated under the CAA. However, the NAAQSs themselves are nonenforceable and are not ARARs.	Site remediation activities must comply with NAAQS. The principal application of these standards is during remedial activities resulting in exposures to dust or vapors. In general, emissions from CERCLA activities are not expected to qualify as a major source and are, therefore, not expected to be ARARs. However, the requirements may be determined to be relevant and appropriate for non-major sources with significantly similar emissions.

TABLE 4-2

ALTERNATIVE 2: EXCAVATION AND OFF-YARD DISPOSAL
ACTION SPECIFIC ARARs AND TBCs
SITE 30 EE/CA
PORTSMOUTH NAVAL SHIPYARD, KITTERY, MAINE

Medium/Activity	Requirement/Citation	Status	Synopsis	Evaluation/Action To Be Taken
Surface Water	CWA Regulations, National Pretreatment Standards (40 CFR Part 403)	Relevant and Appropriate	These regulations set pretreatment standards through the National Categorical Standards of the General Pretreatment Regulations for the introduction of pollutants from non-domestic sources into POTWs in order to control pollutants that pass through, cause interference, or are otherwise incompatible with treatment processes at a POTW.	If any wastewater is discharged to a POTW, the discharge must meet local limits imposed by the POTW. A discharge from a CERCLA site must meet the POTW's pretreatment standards in the effluent of the POTW. Discharge to a POTW is considered an off-site activity and is, therefore subject to the substantive requirements of this rule.
STATE ACTION SPECIFIC ARARs and TBCs				
Hazardous Waste	Maine Hazardous Waste Management Rules [06-096 CMR 800-802, 850, 851, 853-857]	Relevant and Appropriate	These regulations provide standards for the generation, transportation, treatment, storage, and disposal of hazardous waste. They set forth the State definition and criteria for establishing whether waste materials are hazardous and subject to associated hazardous waste regulations. They also provide standards for the location of facilities in a floodplain or within 300 feet of the floodplain and detail groundwater monitoring requirements for hazardous waste facilities. The regulations outline general groundwater monitoring standards for detection monitoring, compliance monitoring, and corrective action monitoring.	State requirements more stringent than federal requirements would take precedence and may be relevant and appropriate if onsite treatment includes the use of hazardous chemicals or generation of hazardous wastes.

TABLE 4-2

ALTERNATIVE 2: EXCAVATION AND OFF-YARD DISPOSAL
ACTION SPECIFIC ARARs AND TBCs
SITE 30 EE/CA
PORTSMOUTH NAVAL SHIPYARD, KITTERY, MAINE

Medium/Activity	Requirement/Citation	Status	Synopsis	Evaluation/Action To Be Taken
Surface Water	Maine Water and Navigation Statutes [38 (MRSA) Chapters 3, 11, and 12] Maine Waste Discharge Permitting Program (06-096 CMR 520 through 529)	Applicable	These rules describe the requirements for industrial discharges to POTWs.	If wastewater is discharged to a POTW, the discharge must meet local limits imposed by the POTW. A discharge from a CERCLA site must meet the POTW's pretreatment standards in the effluent of the POTW. Discharge to a POTW is considered an off-site activity and is therefore subject to the substantive requirements of this rule.
Emissions	Maine Air Pollution Control Law – Classification of Air Quality Control Regions (38 MRSA 583; 06-096 CMR 114)	Relevant and Appropriate	Air quality regions and classification of each region and ambient air quality and emission standards are established.	These regulations would be followed for remedial alternatives that involve emissions of criteria air pollutants.
	Maine Ambient Air Quality Standards (38 MRSA 584;06-096 CMR 110)	Relevant and Appropriate	Ambient air quality standards are established for particulate matter, sulfur dioxide, carbon monoxide, ozone, hydrocarbon, nitrogen dioxide, lead, and total chromium. Ambient increments are defined for the maximum ambient increase of a particular pollutant that can be permitted for a given area.	These standards would be used if any of the alternatives result in emission of unacceptable levels of airborne particulates, lead, or chromium to the atmosphere.
	Maine Air Pollution Control Laws – Maine Emission License Requirements (38 MRSA 585 and 590; 06-096 CMR 115)	Relevant and Appropriate	Requires new sources of air emissions to demonstrate that their emissions do not violate ambient air quality standards. New sources must meet pre-construction monitoring and post-construction monitoring requirements.	These regulations would be followed if any of the remedial alternatives involves emissions of criteria air pollutants.

TABLE 4-2

ALTERNATIVE 2: EXCAVATION AND OFF-YARD DISPOSAL
ACTION SPECIFIC ARARs AND TBCs
SITE 30 EE/CA
PORTSMOUTH NAVAL SHIPYARD, KITTERY, MAINE

Medium/Activity	Requirement/Citation	Status	Synopsis	Evaluation/Action To Be Taken
Waste	Maine Solid Waste Management Regulations (06-096 CMR 400, 401, 405, 411)	Applicable	Provides standards for generation, transportation, treatment, storage, and disposal of solid and special wastes.	These regulations are applicable for the transport of solid waste.

CAA – Clean Air Act
CERCLA - Comprehensive Environmental Response, Compensation, and Liability Act
CFR - Code of Federal Regulations.
CMR - Code of Maine Regulations
CWA – Clean Water Act
MEDEP - Maine Department of Environmental Protection
MRSA - Maine Revised Statutes Annotated
NAAQS – National Ambient Air Quality Standards
OSHA – Occupational Safety and Health Act
POTW - Publicly owned treatment works
RCRA - Resource Conservation and Recovery Act
TSD – Treatment, storage, and disposal
USC – United States Code

TABLE 4-3

COMPARATIVE ANALYSIS OF ALTERNATIVES
SITE 30 EE/CA
PORTSMOUTH NAVAL SHIPYARD, KITTERY, MAINE

Alternative	Effectiveness		Implementability			Cost
	Protectiveness	Ability to Achieve RAOs	Technical Feasibility	Availability	Administrative Feasibility	
1 – No Action	This alternative would not be protective of human health because crystal growth would continue to pose a risk. This alternative would allow the potential threat to groundwater to remain.	No treatment would occur and residual chemicals would remain continuing to allow crystal growth. This alternative would not minimize the potential for a future release to the groundwater.	This alternative is readily implementable.	This alternative is readily implementable.	This alternative is readily implementable.	This alternative would have no cost.
2 – Excavation and Off-yard Disposal	This alternative would eliminate the crystals and remove all site contamination.	This alternative would not employ treatment, but the source of crystal growth would be permanently removed from the site. The source of soluble constituents in the pit water would be removed.	This alternative is implementable. Action-specific ARARs for off-yard transportation/ disposal of vault material would apply.	This technology is readily available and widely implemented. Disposal facilities for vault material are available.	This alternative would require the temporary disruption of the activities within the pit area; with Building 184 operations being relocated this is no longer a concern. Remedial activities are expected to take approximately 2 to 3 months to complete.	This alternative would have moderate remedial action costs.

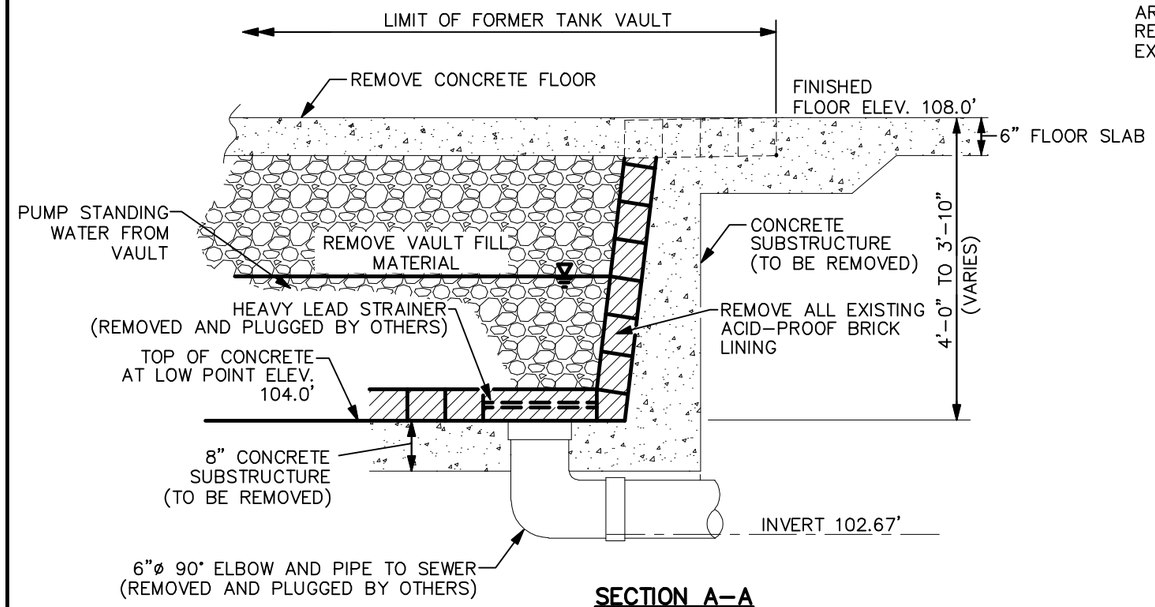

SECTION A–A
N.T.S.

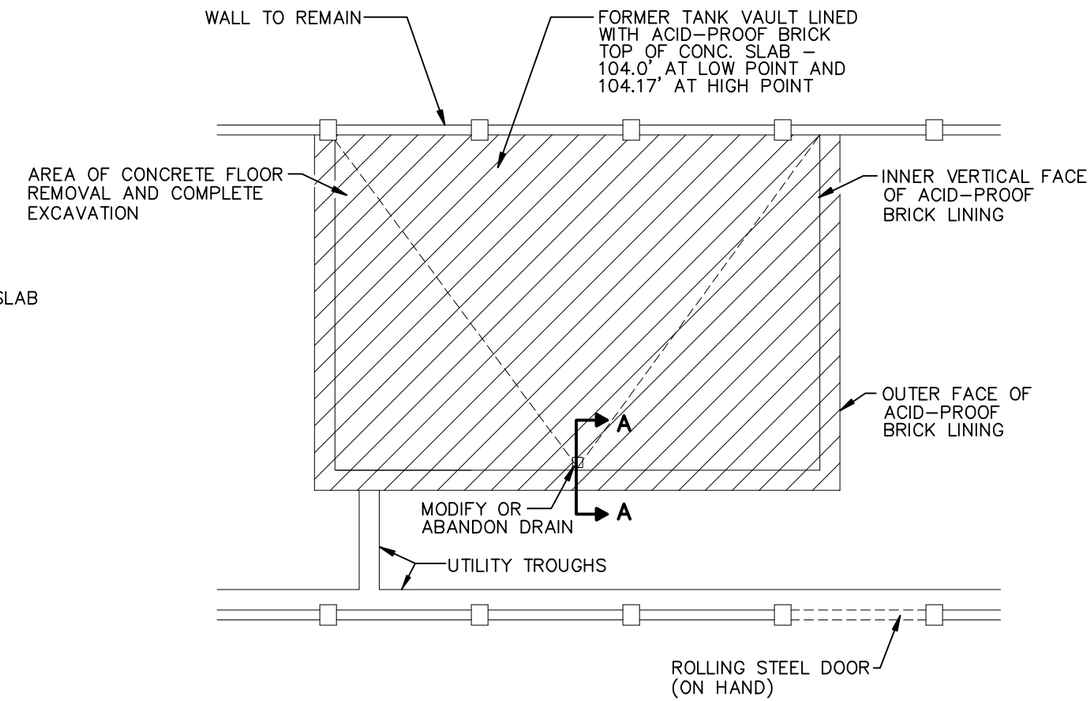

PLAN VIEW

0 15 30
SCALE IN FEET

NOTE:

SEE FIGURE 2–4 FOR 1943 AS–BUILT DETAILS

NO.	DATE	REVISIONS	BY	CHKD	APPD	REFERENCES

DRAWN BY DM DATE 5/10/02
CHECKED BY DATE
COST/SCHED–AREA
SCALE AS NOTED

Tetra Tech NUS, Inc.

ALTERNATIVE 2
CONCEPTUAL EXCAVATION AND GRADING PLAN
BUILDING 184 EE/CA
PORTSMOUTH NAVAL SHIPYARD
KITTERY, MAINE

CONTRACT NO. 0383
OWNER NO. 0055
APPROVED BY DATE
APPROVED BY DATE
DRAWING NO. **FIGURE 4–1**
REV. 0

5.0 RECOMMENDED REMOVAL ACTION ALTERNATIVE

Alternative 2 is the recommended removal action alternative for implementation at Site 30. Of the two alternatives, Alternative 2, Excavation and Off-yard Disposal is recommended because it is the only alternative that achieves the RAO.

As outlined in Section 4.0, the main components of this alternative would consist of the following components:

- Concrete Floor Removal – Currently there is a concrete floor that covers the former tank vault. After the removal of all Navy equipment (performed by the Navy during the welding school move) all remaining office equipment and welding equipment would be removed from the area above the former tank vault. Following the cleaning of the area the concrete floor over the former tank vault would be removed. For purposes of this EE/CA it is assumed that remaining office and welding equipment would be easily moved and that the removal of the concrete slab would be performed using equipment entering Building 184 with a pneumatic attachment. This material would be stockpiled for characterization and loaded into trucks for off-yard disposal. For purposes of this EE/CA it is assumed that this material would be disposed of within a permitted, Navy approved, off-yard hazardous waste disposal facility.

- Water Removal – Following, or prior to, the removal of the concrete slab above the former tank vault, the liquid in the tank vault would be removed using a well point. The removed water would be containerized for characterization and off-yard disposal. For purposes of this EE/CA it is assumed that this water would be disposed of as non-hazardous waste within a permitted, Navy approved, disposal/treatment facility.

- Excavation – Following the removal of the concrete floor and the removal of the liquid from within the former tank vault, the sandy material reportedly used to fill in the former tank vault would be excavated using a small excavator capable of entering Building 184. This material would be stockpiled for characterization and loaded into trucks for off-yard disposal. For purposes of this EE/CA it is assumed that this material would be disposed of within a permitted, Navy approved, off-yard hazardous waste disposal facility.

- Tank Vault Brick Liner Removal – Following the removal of the sandy material used to fill the former tank vault, the acid proof brick lining on the tank vault walls and floor would be removed, using equipment capable of entering Building 184. Based on construction drawings the tank vault walls and floors are concrete overlaid with one layer of acid proof bricks. The acid proof bricks would be

removed, stockpiled for characterization, and disposed off-yard. For purposes of this EE/CA, it is assumed that the acid proof brick would be disposed of within a permitted, Navy approved, off-yard hazardous waste disposal facility.

- Tank Vault Concrete Liner Inspection and Removal - Following the removal of the acid proof brick, the concrete floor and walls would be inspected for staining and to determine if any breaches in the acid proof brick have occurred. The concrete tank vault floor and the three walls in the interior of the building that do not act as part of the foundation would be removed, using equipment capable of entering Building 184. Portions of the concrete that show staining (if any) would be removed and stockpiled separately from the concrete not showing signs of staining. Both stockpiles would be characterized for off-yard disposal. For purposes of this EE/CA, it is assumed that the removed concrete floor and walls would show no signs of staining and would be disposed of within a permitted, Navy approved, off-yard solid waste disposal facility (non-hazardous). Following concrete tank vault floor removal the former drain piping, if found would be removed to the limits of the excavation, then plugged and capped.

- Wall Washing – Due to the construction of the building, the eastern tank vault concrete wall is also a portion of the Building 184 foundation wall. Therefore, the tank vault removal would not include the eastern concrete tank vault wall. This wall would be inspected and would be power washed if needed to remove any contamination. For the purposes of this EE/CA it is assumed that a structural engineer would take part in the inspection of this wall prior to the removal of other concrete tank vault walls and floor, to determine if portions of the north and south tank vault wall and portions of the tank vault floor would need to remain in place for building stability.

- Confirmation Sampling – Following the complete removal of the tank vault, confirmation samples will be collected from the exposed soil walls and floor to determine if additional action needs to be conducted. For the purposes of this EE/CA confirmation sampling would include the collection of one composite soil sample from the three exposed soil walls, and two composite soil samples from the exposed soil floor. Three wipe/chip samples would be collected from the remaining concrete wall. The samples would be analyzed for TAL Metals and TCLP. In the event that the results of confirmation sampling indicate that the soil under the tank has been impacted, the Navy and regulators would discuss if further actions would be required to achieve site closeout. A confirmation sampling plan would be prepared as part of the implementation of this alternative and this document would indicate the actual number and types of samples collected to verify the removal of the tank vault and associated contaminants.

- Characterization Sampling – Materials removed from within and around the former tank vault would be characterized for disposal using TCLP and any other methods required by the selected disposal facility or facilities. A characterization sampling plan would be prepared as part of the implementation of this alternative and this document would indicate the actual number and types of samples collected to determine the appropriate disposal methods.

- Restoration – Following confirmation of the tank vault removal and the removal of any associated contamination (if found), the excavation would be backfilled using certified clean common fill material and the concrete floor would be replaced.

REFERENCES

Dolph, James E. (Shipyard Historian) and Heather W. Hall (Assistant), September 1995. Industrial History of Building 184, Portsmouth Naval Shipyard, Portsmouth, New Hampshire.

MEDEP (Maine Department of Environmental Protection), and Maine Department of Human Services, June 1994. Guidance Manual for Human Health Risk Assessments at Hazardous Substance Sites.

Navy (U.S. Navy), March 2003. Draft Action Memorandum for Non-Time-Critical Removal Action for Site 30, Portsmouth Naval Shipyard, Kittery, Maine.

Navy, July 2003. Correspondence from F. Evans (Navy) to M. Audet (USEPA) and I. McLeod (MEDEP), on the Site 30 Action Memorandum, Portsmouth NSY, Kittery, Maine, dated July 25, 2003.

Shaw, July 2008. Contractor Closeout Report for Site 34 Shoreline Stabilization and Removal Action. Shaw Environmental, Inc., Norfolk, Virginia.

TtNUS (Tetra Tech NUS, Inc.), May 2000. Site Screening Report Site 30 (Building 184), Site 31 (West Timber Basin), and Site 32 (Topeka Pier) for Portsmouth Naval Shipyard, Kittery, Maine. Tetra Tech NUS, Inc., King of Prussia, Pennsylvania (see correspondence dated May 25, 2000 from M. Mengel, TtNUS to M. Cassidy [USEPA] and I. McLeod [MEDEP]).

TtNUS, May 2002. Test Pitting Investigation Report, Building 184, Site 30, March/April 2001 Activity, Portsmouth Naval Shipyard, Kittery, Maine. Tetra Tech NUS, Inc., King of Prussia, Pennsylvania.

TtNUS, December 2002 (Revision 0). Engineering Evaluation/Cost Analysis (EE/CA), Site 30 (Building 184), Portsmouth Naval Shipyard, Kittery, Maine, Revision 0. Tetra Tech NUS, Inc., King of Prussia, Pennsylvania.

TtNUS, January 2004. Site 32 Phase I Remedial Investigation Data Package for Portsmouth Naval Shipyard, Kittery, Maine. Tetra Tech NUS, Inc., King of Prussia, Pennsylvania.

TtNUS, August 2005 (Revision 1). Engineering Evaluation/Cost Analysis (EE/CA), Site 30 (Building 184), Portsmouth Naval Shipyard, Kittery, Maine, Revision 1. Tetra Tech NUS, Inc., King of Prussia, Pennsylvania.

TtNUS, November 2008. Site 32 Remedial Investigation Quality Assurance Project Plan for Portsmouth Naval Shipyard, Kittery, Maine. Tetra Tech NUS, Inc., King of Prussia, Pennsylvania

TtNUS, June 2009. Site 32 Phase II Remedial Investigation Data Package for Portsmouth Naval Shipyard, Kittery, Maine. Tetra Tech NUS, Inc., King of Prussia, Pennsylvania.

USEPA (United States Environmental Protection Agency), August 1993. Guidance on Conducting Non-Time Critical Removal Actions Under CERCLA, EPA 540-R-93-057.

APPENDIX A

TEST PITTING INVESTIGATION RESULTS
(Tables from the Test Pitting Investigation Report)

Test Pitting Investigation Report
Building 184, Site 30
March/April 2001 Activity

Portsmouth Naval Shipyard
Kittery, Maine

Engineering Field Activity Northeast
Contract Number N62472-90-D-1298

Contract Task Order 0232

May 2002

TABLE 2-7

CRYSTAL METAL AND ANION RESULTS
BUILDING 184 TEST PITTING INVESTIGATION
PORTSMOUTH NAVAL SHIPYARD, KITTERY, MAINE

PARAMETER	B184-CR-BW1-00-01	B184-CR-BW2-00-01	B184-CR-BW3-00-01	B184-CR-TP1-01-01
Metals (mg/Kg)				
Aluminum	61800	53600	49600	3630
Antimony	0.97 U	0.94 U	5.9	1.8 J
Arsenic	0.99 U	1.8 U	6.6	8.6
Barium	3.2	39.6	13.1	36.3
Beryllium	2.7	2.9	3.2	0.11 U
Cadmium	4.7	12.4	1.3 J	0.29 U
Calcium	1180	1270	3600	65300
Total Chromium	45.3	66.9	139	15.8
Cobalt	208	201	162	3.5
Copper	394	345	4780	41.1
Hexavalent Chromium	0.697 U	0.668 U	0.633 U	0.615 U
Iron	1980	13400	35800	19600
Lead	8.7	11.6	39.6	21.8
Magnesium	45000	45500	35700	1490
Manganese	11800	16500	2210	218
Mercury	0.01 U	0.4	0.02 U	0.01 U
Nickel	754	682	13000	22.9
Potassium	1720	910	2670	2800
Selenium	3.5 U	3.92 UJ	1.7 U	1.2 U
Silver	1.4	1.5	0.31 J	0.52 J
Sodium	14800	14200	11000	881
Thallium	0.25 U	0.26 U	0.25 U	0.25 U
Vanadium	2	22	74.1	18.7
Zinc	875	1550	914	97.8
Anions				
Orthophosphate (mg/Kg)	1 UR	1 UR	2.8 J	1 UR
Total Cyanide (mg/Kg)	NA	NA	NA	NA
Chloride (mg/Kg) *	2700 UJ	2600 UJ	2500 UJ	40 UJ
Sulfate (mg/Kg)	560000 J	610000 J	610000 J	36600 J
Miscellaneous				
pH (units)	2.8 J	2 J	1.4 J	4.2 J

Notes:

Within the sample identification, the sample location designation is "BW" for "building wall" or "TP" for "test pit".

U - The analyte was analyzed for but was not detected above the reported sample quantitation limit.
J - The analyte was positively identified; the associated numerical value is the approximate concentration of the analyte in the sample.
UJ - The analyte was not detected above the reported sample quantitation limit. However, the reported quantitation limit is approximate and may or may not represent the actual limit of quantitation necessary to accurately and precisely measure the analyte in the sample.
UR - The analyte was not detected above the reported sample quantitation limit. However, the sample results are rejected due to serious deficiencies in the ability to analyze the sample and meet quality control criteria.
NA - The analyte was not analyzed.
* Detection limits are high because of high dilution required in the preparation for sulfate analysis. See Appendix C (Data Validation) for details.

TABLE 2-8

PIT FILL MATERIAL METAL AND ANION RESULTS
BUILDING 184 TEST PITTING INVESTIGATION
PORTSMOUTH NAVAL SHIPYARD, KITTERY, MAINE

PARAMETER	B184-SU-TP-02-01 (mg/kg)	B184-SU-TP-03-01 (mg/kg)	B184-SU-TP-04-01 (mg/kg)	B184-SU-TPFD-040101 Duplicate of B184-SU-TP-04-01 (mg/kg)	B184-SU-TP-0204-01 TCLP (mg/L)
Metals					
Aluminum	10300	10600	6820	8900	
Antimony	0.68 UJ	0.79 UJ	0.7 UJ	0.74 UJ	
Arsenic	13.4	13.4	10.4	13.6	6.8 U
Barium	31.9	33.9	25.1	32.4	64 U
Beryllium	0.39 U	0.33 U	0.21 U	0.27 U	
Cadmium	0.07 U	0.19 U	1.5	0.16 U	3.3 U
Calcium	1790	1500	915	1100	
Total Chromium	26.8	40.8	22.3	31.8	9.3 U
Cobalt	8.3	6.8	6	5.5	
Copper	23	23.7	22.1	27	
Hexavalent Chromium	0.602 UJ	0.6 UJ	0.621 UJ	0.616 UJ	NA
Lead	7.2	8.6	7.1	9.8	3.7 U
Magnesium	5220	5920	3970	5250	
Manganese	385	319	306	256	
Mercury	0.02 U	0.02 U	0.01 U	0.02 U	0.06
Nickel	31.9	28.6	24.1	28.2	
Potassium	1460	1490	1150	1390	
Selenium	0.72 U	0.66 UJ	0.58 UJ	0.62 UJ	7.6 UJ
Silver	1.5	0.22 U	4.8	6.1	2.58 U
Sodium	222	266	256	234	
Thallium	0.23 U	0.22 U	0.21 U	0.21 U	
Vanadium	22.9	29.7	18.4	25.3	
Zinc	42.5	42.8	33.7	37.4	
Anions					
Orthophosphate	1 UR	1 UR	1 UR	NA	NA
Total Cyanide	1 U	1.2 U	1.2 U	1.2 U	NA
Chloride	40 UJ	40 UJ	40 UJ	NA	NA
Sulfate	8300 J	7500 J	19400 J	NA	NA
Miscellaneous					
pH (units)	4.4 J	3.8 J	3.8 J	NA	NA

Notes:

Sample depth corresponding to each sample identification is shown on Figure 2-1.

U - The analyte was analyzed for but was not detected above the reported sample quantitation limit.
J - The analyte was positively identified; the associated numerical value is the approximate concentration of the analyte in the sample.
UJ - The analyte was not detected above the reported sample quantitation limit. However, the reported quantitation limit is approximate and may or may not represent the actual limit of quantitation necessary to accurately and precisely measure the analyte in the sample.
UR - The analyte was not detected above the reported sample quantitation limit. However, the sample results are rejected due to serious deficiencies in the ability to analyze the sample and meet quality control criteria.
NA - The analyte was not analyzed.
TCLP - Toxicity Characteristic Leaching Procedure

TABLE 2-9

PIT WATER METAL AND ANION RESULTS
BUILDING 184 TEST PITTING INVESTIGATION
PORTSMOUTH NAVAL SHIPYARD, KITTERY, MAINE

PARAMETER	B184-LW-TP-03-01	B184-LWF-TP-03-01	B184-LW-TPFD-040101 Duplicate of B184-LW-TP-03-01	B184-LWF-TPFD-040101 Duplicate of B184-LWF-TP-03-01
Metals (ug/L)				
Aluminum	1260000	1400000	1280000	1300000
Antimony	36.5 U	36.5 U	36.5 U	36.5 U
Arsenic	119 U	84.2 U	110 U	79.4 U
Barium	206	3.2 U	189	3.1 U
Beryllium	68.5	74.8	70.6	69.7
Cadmium	246	329	251	298
Calcium	446000	473000	452000	461000
Total Chromium	526	730	526	562
Cobalt	7130	8180	7270	7750
Copper	2590	2750	2630	2560
Hexavalent Chromium (mg/L)	10 UR	30 J	10 UR	20 J
Lead	152	46.3	126	55.6
Magnesium	1220000	1400000	1240000	1280000
Manganese	537000	618000	543000	586000
Mercury	2.5 J	0.2 U	0.7 J	0.12 U
Nickel	22700	27800	23400	25100
Potassium	26000	24200	25800	21100
Selenium	30.4 UJ	33.1 U	30.4 UJ	30.4 UJ
Silver	73.6	18.2	71.9	18.5
Sodium	419000	479000	427000	444000
Thallium	2.4 J	2 U	2 U	2 U
Vanadium	212	294	207	208
Zinc	26600	33600	27200	29900
Anions				
Orthophosphate (mg/L)	NA	0.05 UJ	NA	NA
Total Cyanide (ug/L)	10 UJ	10 UJ	10 UJ	10 UJ
Total Phosphorus (mg/L)	NA	4.4	NA	NA
Chloride (mg/L)	NA	20	NA	NA
Sulfate (mg/L)	NA	7100 J	NA	NA
Miscellaneous				
pH (units)	3.7 J	3.4 J	NA	NA

Notes:

Designation "LWF" corresponds to filtered sample.

U - The analyte was analyzed for but was not detected above the reported sample quantitation limit.
J - The analyte was positively identified; the associated numerical value is the approximate concentration of the analyte in the sample.
UJ - The analyte was not detected above the reported sample quantitation limit. However, the reported quantitation limit is approximate and may or may not represent the actual limit of quantitation necessary to accurately and precisely measure the analyte in the sample.
UR - The analyte was not detected above the reported sample quantitation limit. However, the sample results are rejected due to serious deficiencies in the ability to analyze the sample and meet quality control criteria.
NA - The analyte was not analyzed.

APPENDIX B

GROUNDWATER TECHNICAL EVALUATION

APPENDIX B

Groundwater Evaluation for Site 30 – Former Galvanizing Plant, Building 184
Portsmouth Naval Shipyard, Kittery Maine
January 2010

Introduction

This groundwater evaluation was conducted to provide the most current understanding of geology, hydrogeology, and groundwater quality at Site 30 to support the Engineering Evaluation/Cost Analysis (EE/CA), Revision 2 for Site 30 at Portsmouth Naval Shipyard (PNS), Kittery, Maine.

Data provided in the Site Screening Investigation (SSI) Report (TtNUS, May 2000), Test Pitting Investigation Report (TtNUS, May 2002), Site 30 EE/CA Revisions 0 and 1 (TtNUS, December 2002 and August 2005), and data packages for Phases I and II of the Site 32 Remedial Investigation (RI) (TtNUS, January 2004 and June 2009) were used for the evaluation as discussed herein.

The evaluation focuses on providing information to support resolution of regulatory concerns raised regarding the understanding of groundwater flow and potential impact from Site 30. The concerns were raised in comments on the SSI Report, Site 30 EE/CA (Revisions 0 and 1), and draft Site 30 Action Memorandum Revision 0. The major concern was that groundwater flow direction for Site 30 had not been adequately characterized to appropriately locate downgradient monitoring wells for evaluation of potential groundwater impacts from Site 30. As part of the development of the data quality objectives (DQOs) for the RI for Site 32, monitoring wells were located at Site 32 that were downgradient of Site 30 to provide the additional information for assessment of groundwater flow direction. The monitoring wells (TP-MW10 and TP-MW12) were installed as part of the Phase I and Phase II Site 32 RI field activities. Water level measurements in Site 30 and Site 32 monitoring wells were collected as part of the Site 32 RI field activities. In addition, as part of the Phase II Site 32 RI field work, groundwater samples for inorganic analysis were collected at Site 30 monitoring wells to provide additional chemical data for Site 30. Additional information on the data collected and used as part of this evaluation are provided herein.

Vertical elevations discussed herein are based on PNS 2002 datum, except where indicated. (Since 2002, the standard vertical elevation for the Shipyard equates mean high water (MHW) to 100.36 feet and is referred to as the PNS 2002 vertical datum. Before 2002, mean high water was equated to 100.32 feet and is referred to as the PNS MHW vertical datum.)

Geology

The Site 30 surface is primarily asphalt and concrete and is at an elevation of between 107 to 108 feet (Figure 1). Unconsolidated material in the shallow subsurface is, from shallow to deep: fill materials (silt with varying amount of sand, gravel, and brick), clayey silt, and silt to sandy silt with trace metamorphic rock fragments (TtNUS, May 2000). Metamorphic rock fragment fill is also present in the northern portion of the site. The cross section in Figure 2 shows information on the extents and thicknesses of the materials in the unconsolidated shallow subsurface.

Bedrock at Site 30 is composed of the dark gray calcareous quartzite of the Kittery Formation. Depth to bedrock varies from approximately 4 feet below ground surface (bgs) at B184-MW01 to 14 to 20.5 feet bgs at B184-MW03 and B184-MW04, respectively. Under Building 184, the bedrock surface undulates from south to north, with a bedrock low at monitoring well B184-MW02 and a bedrock high at B184-MW04 (Figure 2). The bedrock surface slopes downward from west to east in the area of the tank vault (Figure 3). The depth of the vault bottom as shown on construction drawings is at 103.33 feet (likely based on PNS MHW), which is at least 10 feet higher than bedrock surface in the vicinity of the vault.

Hydrology

Groundwater elevations have been measured during multiple events (July 1998, May 2003, June 2008, and December 2008). Table 1 provides the depths to groundwater and groundwater elevations measured at Site 30 and downgradient Site 32 wells. Figures showing the potentiometric groundwater surface elevation based on the various water level measurements are provided on Figures 4 through 13. For the figures that were previously presented in other documents, the source of the figure is provided. As shown on the Figures 4 through 13, groundwater flow direction in the area of Site 30 is primarily towards the north-northeast. Depth to groundwater at Site 30 is generally between 4 and 6 feet bgs. From the data in Table 1, no indication of tidal influence is apparent in wells at Site 30. Differences in groundwater levels between the rounds are likely a result of seasonal variation.

Groundwater levels in wells at and downgradient of Site 30 have been lower than the elevation of the floor of the tank vault (103.33 feet in PNS MHW or 103.37 feet in PNS 2002 datum) except for groundwater levels at upgradient monitoring well B184-MW01 and one groundwater level at downgradient well B184-MW04. The higher water level measurement at B184-MW01 is expected because this well is located upgradient of Site 30. The one measurement at B184-MW04 (103.39 feet at high tide on December 15, 2008) is anomalous compared to the other four rounds of groundwater level measurements collected from this well; the measurement may be related to pressure head due to the well being screened in bedrock. Groundwater level measurements at B184-MW02, the well closest to the tank vault, have been lower in elevation than the floor of the tank vault at all times the well was measured.

During the Test Pitting Investigation in 2001 (TtNUS, May 2002), water was observed in the tank vault, approximately 1.6 feet below the floor surface (at an elevation of approximately 105 to 106 feet). Because the groundwater level at monitoring well B184-MW02 (elevation approximately 102 feet) was lower than the water level in the vault, it was inferred that there was no direct hydraulic connection between the water in the vault and groundwater in the vicinity of the building (TtNUS, May 2002).

Previous Sampling Results

Field parameters for groundwater at Site 30 and Site 32 wells were reported in the Site Screening Report (TtNUS, 2000), Site 32 Phase I RI Data Package (TtNUS, 2004), and Site 32 Phase II RI Data Package (TtNUS, 2009). Table 2 contains the field parameter data for the wells discussed in this evaluation for each investigation. Building 184 wells MW01, MW02, MW03, and MW04 were sampled as a part of the SSI and as part of the Site 32 Phase II RI field work. FA-01, FA-01B, and TP-MW10 were sampled as a part of the Site 32 Phase I and Phase II RI field work. Monitoring well TP-MW12 was installed and sampled as a part of the Site 32 Phase II RI field work. A database print out of the groundwater data from the SSI and Site 32 RI investigations for the wells included in the evaluation are provided as an attachment to the evaluation.

The analytical results of samples collected from vault fill material, vault water, and crystalline material in or around the vault, provided in the Test Pitting Investigation Report, were also reviewed. The tables are included in Appendix A of the Revision 2 EE/CA. The vault sample results were used to provide an indication of chemicals that were most likely of concern for migration to groundwater. Information provided in the Test Pitting Investigation Report (TtNUS, May 2002) was also considered as part of the evaluation provided herein. The following is a summary of the analytical findings for the materials in the vault:

- The predominant chemicals detected were sulfate, aluminum, iron, and magnesium based on concentrations. Other metals were also detected to a lesser degree.

- Concentrations of chemicals in the fill material samples were less than screening levels for a typical industrial worker and soil screening levels for protection of groundwater (based on groundwater as a drinking water source).

- Several inorganic contaminants (in particular manganese) in the water sample were present at concentrations exceeding the screening levels that were developed for a construction worker.

- The main human health risk concern was related to the acidic nature of the crystals.

Evaluation of Data

Salinity, pH, and chemical concentrations were evaluated for Site 30 monitoring wells and downgradient Site 32 monitoring wells to determine whether groundwater shows an adverse impact from Site 30. Monitoring wells are located upgradient of (B184-MW01), at (B184-MW02 and B184-MW03), and downgradient of (B814-MW04, TP-MW10, TP-MW12, and FA-01) Site 30 as shown on Figure 1.

Groundwater is considered fresh if salinity readings are less than 0.5 ppt, brackish if salinity is between 0.5 ppt and 30 ppt, and saline if salinity is greater than 30 ppt. Salinity readings in the Site 30 wells ranged from 0.28 to 0.85 ppt, as shown on Table 2. No Site 30 well was consistently fresh or brackish. Salinity readings for the wells located downgradient within Site 32 (located outside the original island boundary) range from approximately 6 to 26 ppt. Based on the salinity in the Site 30 wells, groundwater at Site 30 would not be considered suitable for drinking. Therefore, for evaluation of chemical data, only risk-based numbers for construction worker exposure to groundwater were used to evaluate potential risks.

Groundwater pH values were in the neutral range; values for Site 30 wells ranged from 6.48 to 8.8 and for Site 32 downgradient wells from 7.35 to 7.71. In contrast, tank pit water was acidic with a pH of 3.6.

Table 3 provides the chemicals detected in Site 30 monitoring wells and the range of detections. Comparison of these chemicals to construction worker risk-based numbers shows that there were no exceedances of the risk-based numbers for any of the chemicals in Site 30 wells. There were also no exceedances of the risk-based numbers for any of these chemicals in Site 32 wells.

Conclusions

- Groundwater flow direction has been adequately characterized at Site 30 with the addition of the downgradient monitoring wells within Site 32 (TP-MW10 and TP-MW12). Monitoring wells are sufficiently located upgradient of (B184-MW01), at (B184-MW02 and B184-MW03), and downgradient of (B814-MW04, TP-MW10, TP-MW12, and FA-01) Site 30.

- Groundwater in the area of Site 30 is not significantly tidally influenced.

- Contamination in the tank vault has not adversely impacted groundwater at or downgradient of Site 30 based on pH, water level elevations, and metals concentrations in groundwater.

References

TtNUS, May 2000. Site Screening Report Site 30 (Building 184), Site 31 (West Timber Basin), and Site 32 (Topeka Pier) for Portsmouth Naval Shipyard Kittery, Maine.

TtNUS, May 2002. Test Pitting Investigation Report, Building 184, Site 30, March/April 2001 Activitiy for Portsmouth Naval Shipyard, Kittery, Maine.

TtNUS, December 2002. Site 30 (Building 184) Engineering Evaluation/Cost Analysis for Portsmouth Naval Shipyard, Kittery Maine. Revision 0.

TtNUS, January 2004. Site 32 Phase I Remedial Investigation Data Package for Portsmouth Naval Shipyard, Kittery Maine.

TtNUS, August 2005. Site 30 (Building 184) Engineering Evaluation/Cost Analysis for Portsmouth Naval Shipyard, Kittery Maine. Revision 1.

TtNUS, November 2008. Site 32 Remedial Investigation Quality Assurance Project Plan for Portsmouth Naval Shipyard, Kittery, Maine. Revision 1

TtNUS, June 2009. Site 32 Phase II Remedial Investigation Data Package for Portsmouth Naval Shipyard, Kittery Maine.

By affixing my seal to the "*Groundwater Evaluation for Site 30 – Former Galvanizing Plant, Building 184, Portsmouth Naval Shipyard, Kittery, Maine,*" prepared by Tetra Tech NUS, Inc., and dated October 2010, I am certifying that the geologic information and interpretations herein are true and correct to the best of my knowledge. I further certify that I am licensed to practice in the State of Maine and that it is within my professional expertise to verify the correctness of the information.

STATE OF MAINE
TIMOTHY S.
EVANS
GE505
GEOLOGIST

Table 1
Summary of Groundwater Level Measurements for Site 30 and Downgradient Monitoring Wells
Site 30 Groundwater Evaluation
Portsmouth Naval Shipyard, Kittery, Maine

Well ID[1]	Original Datum	Original Datum Reference Elevation	Reference Elevation in PNS 2002 Datum	New reference elevation in for wells converted in 2008 (in PNS 2002 Datum)[1]	`July 1998 (Elevations are shown in MHW Datum) [2]				`May 2003 (Elevations are shown in PNS 2002 Datum) [3]				`June 2008 (Elevations are shown in PNS 2002 Datum) [4]				`December 15, 2008 (Elevations are shown in PNS 2002 Datum) [5]				`December 16, 2008 (Elevations are shown in PNS 2002 Datum) [5]			
					Low Tide		High Tide		Low Tide		High Tide		Low Tide		High Tide		Low Tide		High Tide		Low Tide		High Tide	
					Water Depth	GW Elevation	Water Depth	GW Elevation	Water Depth	GW Elevation	Water Depth	GW Elevation	Water Depth	GW Elevation	Water Depth	GW Elevation	Water Depth	GW Elevation	Water Depth	GW Elevation	Water Depth	GW Elevation	Water Depth	GW Elevation
FA-01	MHW	109.21	109.25	106.32	NA	NA	NA	NA	10.9	98.35	10.75	98.5	10.73	98.52	11.61	97.64	7.97	98.35	7.71	98.61	8.15	98.17	7.92	98.4
FA-01B	MHW	108.87	108.91	106.18	NA	NA	NA	NA	11.16	97.75	9.68	99.23	10.84	98.07	9.45	99.46	8.67	97.51	6.06	100.12	8.77	97.41	6.6	99.58
TP-MW10	2002 Datum	106.47	106.47	NC	NA	NA	NA	NA	9.1	97.37	8.71	97.76	8.66	97.81	8.54	97.93	8.51	97.96	7.62	98.85	8.78	97.69	8.63	97.84
TP-MW11	2002 Datum	105.16	105.16	NC	NA	NA	NA	NA	NA	NA	NA	NA	NA	NA	NA	NA	5.2	99.96	6.22	98.94	7.55	97.61	7.16	98
TP-MW12	2002 Datum	106.36	106.36	NC	NA	NA	NA	NA	NA	NA	NA	NA	NA	NA	NA	NA	7.98	98.38	7.75	98.61	8.18	98.18	8.02	98.34
B184-MW01	MHW	108.36	108.4	NC	4.89	103.47	4.83	103.53	no access	no access	no access	no access	3.92	**104.48**	3.81	**104.59**	3.97	**104.43**	3.92	**104.48**	3.88	**104.52**	3.89	**104.51**
B184-MW02	MHW	107.32	107.36	NC	5.63	101.69	5.61	101.71	6.9	100.46	5.25	102.11	4.65	102.71	4.74	102.62	NA	NA	4.61	102.75	4.75	102.61	4.8	102.56
B184-MW03	MHW	107.43	107.47	NC	6.17	101.26	6.22	101.21	5.5	101.97	5.4	102.07	5.4	102.07	5.38	102.09	6.15	101.32	5	102.47	5.11	102.36	5.13	102.34
B184-MW04	MHW	107.43	107.47	NC	7.28	100.15	7.32	100.11	7.52	99.95	6.75	100.72	5.97	101.5	6.02	101.45	5.03	102.44	4.08	**103.39**	6.22	101.25	6.23	101.24

Notes:

Bold text indicates groundwater elevation is higher than the floor of the tank vault. The eelevation of the tank vault floor is shown as 103.33 feet (assumed to be PNS MHW datum) on the 1943 as-built drawing, which is 103.37 feet in PNS 2002 datum.

PNS MHW datum equates mean high water to 100.32 feet.

PNS 2002 datum equates mean high water to 100.36 feet.

NA: Data not available

NC: Well not converted. PNS 2002 Reference elevation used to calculate WL elevations (except for 1998 data where MHW= 100.32 ft datum is used to calculate WL elevations)

No access: The well was not able to be accessed.

1. FA wells were converted from stick-up completion to flush-mount completion in December 2008.
2. Water depth and elevations as provided in the SSI Report.
3. Water level data provided in the Site 32 Phase I Remedial Investigation Data Package
4. Water level data provided in Appendix I of the Site 32 RI QAPP, Revision 1.
5. Water level data provided in the Site 32 Phase II Remedial Investigation Data Package. Water levels from FA-01 and FA-0B taken after wells converted to flush mount.

Table 2
Field Parameter Data for Site 30 and Downgradient Monitoring Wells
Site 30 Groundwater Evaluation
Portsmouth Naval Shipyard, Kittery, Maine

Monitoring Well ID	Date	Dissolved Oxygen mg/L	ORP mV	PH S.U.	Salinity ppt	Specific Conductance mS/cm	Temperature °C	Turbidity NTU
B184-MW01	August 1998	1.21	NA	7.29	0.63	1.253	19.03	2.1
	December 2008	4.72	130.2	8.8	0.28	0.58	12.01	3.3
B184-MW02	August 1998	1.11	NA	6.92	0.48	0.964	16.76	26
	December 2008	0.79	23.5	6.66	0.85	1.673	12.98	4.96
B184-MW03	August 1998	1.88	NA	7.31	0.58	1.161	21.41	15
	December 2008	0.61	22.4	7.06	0.77	1.522	11.16	0.3
B184-MW04	August 1998	5.66	NA	6.79	0.28	0.578	18.66	0.85
	December 2008	6.31	151.5	6.48	0.75	1.48	10.52	6.59
FA-01	May 2003	9.27	277	7.71	23.87	37.85	8.22	0
	December 2008	6.66	111.3	7.44	23.97	25.943	8.35	0
FA-01B	May 2003	2.76	226.9	7.53	5.3	9.42	8.89	0
	December 2008	1.27	-70.3	7.55	6.77	11.922	7.58	0.1
TP-MW10	May 2003	9.36	247.8	7.35	20.29	37.85	8.22	1.4
	December 2008	5.99	153.9	7.6	18.46	29.923	9.77	0
TP-MW12	December 2008	4.39	60.6	7.63	26.06	41.186	7.02	4.61

Table 3
Site 30 Groundwater Positive Detection Summary
Site 30 Groundwater Evaluation
Portsmouth Naval Shipyard, Kittery, Maine

PARAMETER	Frequency of Detection (1)	Minimum Detection	Maximum Detection	Location of Maximum Detection	Sample with Maximum Detection (1)	PNS Construction Worker Risk-Based Number for Groundwater (2)
Semivolatile Organics (ug/L)						
BIS(2-ETHYLHEXYL)PHTHALATE	3/4	1 J	6 J	B184-MW01	B184-MW-01-11	3200
BUTYL BENZYL PHTHALATE	2/4	0.6 J	0.9 J	B184-MW01	B184-MW-01-11-D	5.4
BUTYL BENZYL PHTHALATE	2/4	0.6 J	0.9 J	B184-MW03	B184-MW-03-11	5.4
DI-N-BUTYL PHTHALATE	4/4	0.9 J	2 J	B184-MW02	B184-MW-02-11	31000
PHENOL	1/4	0.9 J	0.9 J	B184-MW04	B184-MW-04-11	1300000
Inorganics (ug/L)						
ANTIMONY	1/8	12.3	12.3	B184-MW01	B184GWMW011208	1550
BARIUM	4/8	29.3	69	B184-MW04	B184GWMW041208	361000
CALCIUM	8/8	19800	132000	B184-MW02	B184GWMW021208	NA
CHROMIUM	1/8	2.1 J	2.1 J	B184-MW01	B184GWMW011208	258000
IRON	1/8	2120	2120	B184-MW03	B184-MW-03-11	18100000
LEAD	4/8	1.3 J	3.6	B184-MW04	B184-MW-04-11	1340
MAGNESIUM	6/8	3820	25400	B184-MW02	B184GWMW021208	NA
MANGANESE	4/8	66.2	2290	B184-MW02	B184GWMW021208	24800
POTASSIUM	8/8	3350	8760	B184-MW03	B184-MW-03-11	NA
SELENIUM	4/8	6.6 J	15.6	B184-MW04	B184GWMW041208	129000
SODIUM	8/8	38600	306000	B184-MW03	B184GWMW031208	NA
ZINC	3/8	5.1	11	B184-MW04	B184-MW-04-11	12900000
Filtered Inorganics (ug/L)						
BARIUM	4/4	24.6	63.6	B184-MW04	B184GWMW041208	361000
CALCIUM	4/4	20200	137000	B184-MW02	B184GWMW021208	NA
CHROMIUM	1/4	1.8 J	1.8 J	B184-MW01	B184GWMW011208	258000
COBALT	1/4	2.7	2.7	B184-MW02	B184GWMW021208	19400
COPPER	1/4	6.8 J	6.8 J	B184-MW01	B184GWMW011208	1030000
IRON	1/4	102 J	102 J	B184-MW02	B184GWMW021208	18100000
MAGNESIUM	4/4	1030	25500	B184-MW02	B184GWMW021208	NA
MANGANESE	1/4	2310	2310	B184-MW02	B184GWMW021208	24800
NICKEL	2/4	5	10.6	B184-MW04	B184GWMW041208	103000
POTASSIUM	4/4	3400	8290	B184-MW04	B184GWMW041208	NA
SODIUM	4/4	97600	340000	B184-MW03	B184GWMW031208	NA
VANADIUM	1/4	2.1	2.1	B184-MW01	B184GWMW011208	129000
ZINC	4/4	10.8 J	25.1	B184-MW01	B184GWMW011208	12900000
Miscellaneous Parameters						
CARBONATE ALKALINITY MG/L	4/4	160	230	B184-MW02	B184-MW-02-11	NA
CHLORIDE MG/L	4/4	14	240	B184-MW01	B184-MW-01-11-D	NA
HEXAVALENT CHROMIUM MG/L	2/4	0.011	0.011	B184-MW03	B184-MW-03-11	NA
HEXAVALENT CHROMIUM MG/L	2/4	0.011	0.011	B184-MW02	B184-MW-02-11	NA
NITRATE MG/L	3/4	0.83 J	4.9 J	B184-MW04	B184-MW-04-11	NA
PH S.U.	4/4	7	7.6	B184-MW01	B184-MW-01-11-D	NA
SALINITY PPT	4/4	0.18	0.8	B184-MW01	B184-MW-01-11	NA
SULFATE MG/L	4/4	16	53	B184-MW04	B184-MW-04-11	NA
TOTAL ORGANIC CARBON MG/L	4/4	1.9	2.7	B184-MW01	B184-MW-01-11	NA

1 - The average and duplicate sample are counted as one when determining the frequency of detection and considered as unique samples for determining minimum and maximum concentrations.

2 - Based on 10^{-5} for carcinogens and HI of 1 for non-carcinogens.

Associated Samples:

B184-MW-01-11	B184-MW-02-11	B184GWMW011208
B184-MW-01-11-AVG	B184-MW-03-11	B184GWMW021208
B184-MW-01-11-D	B184-MW-04-11	B184GWMW031208
		B184GWMW041208

	SITE 30 UPGRADIENT WELL			SITE 30 GROUNDWATER WELLS			
SAMPLE ID	B184-MW-01-11	B184-MW-01-11-D	B184GWMW011208	B184-MW-02-11	B184GWMW021208	B184-MW-03-11	B184GWMW031208
LOCATION ID	B184-MW01	B184-MW01	B184-MW01	B184-MW02	B184-MW02	B184-MW03	B184-MW03
SAMPLE DATE	19980804	19980804	20081215	19980805	20081217	19980805	20081217
SAMPLE TYPE	NORMAL	NORMAL	NORMAL	NORMAL	NORMAL	NORMAL	NORMAL
QC TYPE	NM	FD	NM	NM	NM	NM	NM
SACODE	ORIG	DUP	NORMAL	NORMAL	NORMAL	NORMAL	NORMAL
MATRIX	GW	GW	GW	GW	GW	GW	GW
DUPLICATE		B184-MW-01-11					
TOP	3.5	3.5	3.5	10	10	3.5	3.5
BOTTOM	13.5	13.5	13.5	20	20	13.5	13.5
DEPTH UNIT	FT	FT	FT	FT	FT	FT	FT
Volatile Organics (ug/L)							
1,1,1-TRICHLOROETHANE	10 U	10 U		10 U		10 U	
1,1,2,2-TETRACHLOROETHANE	10 U	10 U		10 U		10 U	
1,1,2-TRICHLOROETHANE	10 U	10 U		10 U		10 U	
1,1,2-TRICHLOROTRIFLUOROETHANE	10 U	10 U		10 U		10 U	
1,1-DICHLOROETHANE	10 U	10 U		10 U		10 U	
1,1-DICHLOROETHENE	10 U	10 U		10 U		10 U	
1,2-DICHLOROETHANE	10 U	10 U		10 U		10 U	
1,2-DICHLOROPROPANE	10 U	10 U		10 U		10 U	
2-BUTANONE	10 U	10 U		10 U		10 U	
2-HEXANONE	10 U	10 U		10 U		10 U	
4-METHYL-2-PENTANONE	10 U	10 U		10 U		10 U	
ACETONE	10 UJ	10 UJ		10 U		10 UJ	
BENZENE	10 U	10 U		10 U		10 U	
BROMODICHLOROMETHANE	10 U	10 U		10 U		10 U	
BROMOFORM	10 U	10 U		10 U		10 U	
BROMOMETHANE	10 U	10 U		10 U		10 U	
CARBON DISULFIDE	10 U	10 U		10 U		10 U	
CARBON TETRACHLORIDE	10 U	10 U		10 U		10 U	
CHLOROBENZENE	10 U	10 U		10 U		10 U	
CHLORODIBROMOMETHANE	10 U	10 U		10 U		10 U	
CHLOROETHANE	10 U	10 U		10 U		10 U	
CHLOROFORM	10 U	10 U		10 U		10 U	
CHLOROMETHANE	10 UJ	10 UJ		10 U		10 U	
CIS-1,3-DICHLOROPROPENE	10 U	10 U		10 U		10 U	
ETHYLBENZENE	10 U	10 U		10 U		10 U	
METHYLENE CHLORIDE	10 U	10 U		10 U		10 U	
STYRENE	10 U	10 U		10 U		10 U	
TETRACHLOROETHENE	10 U	10 U		10 U		10 U	
TOLUENE	10 U	10 U		10 U		10 U	
TOTAL 1,2-DICHLOROETHENE	10 U	10 U		10 U		10 U	
TOTAL XYLENES	10 U	10 U		10 U		10 U	
TRANS-1,3-DICHLOROPROPENE	10 U	10 U		10 U		10 U	
TRICHLOROETHENE	10 U	10 U		10 U		10 U	
VINYL CHLORIDE	10 UJ	10 UJ		10 U		10 U	
Semivolatile Organics (ug/L)							
1,2,4-TRICHLOROBENZENE	10 U	11 U		11 U		10 U	
1,2-DICHLOROBENZENE	10 U	11 U		11 U		10 U	
1,3-DICHLOROBENZENE	10 U	11 U		11 U		10 U	
1,4-DICHLOROBENZENE	10 U	11 U		11 U		10 U	
2,2'-OXYBIS(1-CHLOROPROPANE)	10 U	11 U		11 U		10 U	
2,4,5-TRICHLOROPHENOL	25 U	28 U		28 U		25 U	
2,4,6-TRICHLOROPHENOL	10 U	11 U		11 U		10 U	
2,4-DICHLOROPHENOL	10 U	11 U		11 U		10 U	
2,4-DIMETHYLPHENOL	10 U	11 U		11 U		10 U	
2,4-DINITROPHENOL	25 U	28 U		28 U		25 U	
2,4-DINITROTOLUENE	10 U	11 U		11 U		10 U	
2,6-DINITROTOLUENE	10 U	11 U		11 U		10 U	
2-CHLORONAPHTHALENE	10 U	11 U		11 U		10 U	
2-CHLOROPHENOL	10 U	11 U		11 U		10 U	
2-METHYLNAPHTHALENE	10 U	11 U		11 U		10 U	
2-METHYLPHENOL	10 U	11 U		11 U		10 U	
2-NITROANILINE	25 U	28 U		28 U		25 U	
2-NITROPHENOL	10 U	11 U		11 U		10 U	

	SITE 30 UPGRADIENT WELL			SITE 30 GROUNDWATER WELLS			
SAMPLE ID	B184-MW-01-11	B184-MW-01-11-D	B184GWMW011208	B184-MW-02-11	B184GWMW021208	B184-MW-03-11	B184GWMW031208
LOCATION ID	B184-MW01	B184-MW01	B184-MW01	B184-MW02	B184-MW02	B184-MW03	B184-MW03
SAMPLE DATE	19980804	19980804	20081215	19980805	20081217	19980805	20081217
SAMPLE TYPE	NORMAL	NORMAL	NORMAL	NORMAL	NORMAL	NORMAL	NORMAL
QC TYPE	NM	FD	NM	NM	NM	NM	NM
SACODE	ORIG	DUP	NORMAL	NORMAL	NORMAL	NORMAL	NORMAL
MATRIX	GW	GW	GW	GW	GW	GW	GW
DUPLICATE		B184-MW-01-11					
TOP	3.5	3.5	3.5	10	10	3.5	3.5
BOTTOM	13.5	13.5	13.5	20	20	13.5	13.5
DEPTH UNIT	FT	FT	FT	FT	FT	FT	FT
3,3'-DICHLOROBENZIDINE	10 U	11 UJ		11 UJ		10 U	
3-NITROANILINE	25 U	28 U		28 U		25 U	
4,6-DINITRO-2-METHYLPHENOL	25 U	28 U		28 U		25 U	
4-BROMOPHENYL PHENYL ETHER	10 U	11 U		11 U		10 U	
4-CHLORO-3-METHYLPHENOL	10 U	11 U		11 U		10 U	
4-CHLOROANILINE	10 U	11 U		11 U		10 U	
4-CHLOROPHENYL PHENYL ETHER	10 U	11 U		11 U		10 U	
4-METHYLPHENOL	10 U	11 U		11 U		10 U	
4-NITROANILINE	25 UJ	28 U		28 U		25 UJ	
4-NITROPHENOL	25 U	28 U		28 U		25 U	
ACENAPHTHENE	10 U	11 U		11 U		10 U	
ACENAPHTHYLENE	10 U	11 U		11 U		10 U	
ANTHRACENE	10 U	11 U		11 U		10 U	
BENZO(A)ANTHRACENE	10 U	11 U		11 U		10 U	
BENZO(A)PYRENE	10 U	11 U		11 U		10 U	
BENZO(B)FLUORANTHENE	10 U	11 U		11 U		10 U	
BENZO(G,H,I)PERYLENE	10 U	11 UJ		11 UJ		10 U	
BENZO(K)FLUORANTHENE	10 U	11 U		11 U		10 U	
BIS(2-CHLOROETHOXY)METHANE	10 U	11 U		11 U		10 U	
BIS(2-CHLOROETHYL)ETHER	10 U	11 U		11 U		10 U	
BIS(2-ETHYLHEXYL)PHTHALATE	6 J	5 J		2 J		1 J	
BUTYL BENZYL PHTHALATE	0.6 J	0.9 J		11 U		0.9 J	
CARBAZOLE	10 U	11 U		11 U		10 U	
CHRYSENE	10 U	11 U		11 U		10 U	
DI-N-BUTYL PHTHALATE	0.9 J	1 J		2 J		1 J	
DI-N-OCTYL PHTHALATE	10 U	11 U		11 U		10 U	
DIBENZO(A,H)ANTHRACENE	10 U	11 U		11 U		10 U	
DIBENZOFURAN	10 U	11 U		11 U		10 U	
DIETHYL PHTHALATE	10 U	11 U		11 U		10 U	
DIMETHYL PHTHALATE	10 U	11 U		11 U		10 U	
FLUORANTHENE	10 U	11 U		11 U		10 U	
FLUORENE	10 U	11 U		11 U		10 U	
HEXACHLOROBENZENE	10 U	11 U		11 U		10 U	
HEXACHLOROBUTADIENE	10 U	11 U		11 U		10 U	
HEXACHLOROCYCLOPENTADIENE	10 U	11 U		11 U		10 U	
HEXACHLOROETHANE	10 U	11 U		11 U		10 U	
INDENO(1,2,3-CD)PYRENE	10 U	11 U		11 U		10 U	
ISOPHORONE	10 U	11 U		11 U		10 U	
N-NITROSO-DI-N-PROPYLAMINE	10 U	11 U		11 U		10 U	
N-NITROSODIPHENYLAMINE	10 U	11 U		11 U		10 U	
NAPHTHALENE	10 U	11 U		11 U		10 U	
NITROBENZENE	10 U	11 U		11 U		10 U	
PENTACHLOROPHENOL	25 U	28 U		28 U		25 U	
PHENANTHRENE	10 U	11 U		11 U		10 U	
PHENOL	10 U	11 U		11 U		10 U	
PYRENE	10 U	11 U		11 U		10 U	

	SITE 30 UPGRADIENT WELL			SITE 30 GROUNDWATER WELLS			
SAMPLE ID	B184-MW-01-11	B184-MW-01-11-D	B184GWMW011208	B184-MW-02-11	B184GWMW021208	B184-MW-03-11	B184GWMW031208
LOCATION ID	B184-MW01	B184-MW01	B184-MW01	B184-MW02	B184-MW02	B184-MW03	B184-MW03
SAMPLE DATE	19980804	19980804	20081215	19980805	20081217	19980805	20081217
SAMPLE TYPE	NORMAL	NORMAL	NORMAL	NORMAL	NORMAL	NORMAL	NORMAL
QC TYPE	NM	FD	NM	NM	NM	NM	NM
SACODE	ORIG	DUP	NORMAL	NORMAL	NORMAL	NORMAL	NORMAL
MATRIX	GW	GW	GW	GW	GW	GW	GW
DUPLICATE		B184-MW-01-11					
TOP	3.5	3.5	3.5	10	10	3.5	3.5
BOTTOM	13.5	13.5	13.5	20	20	13.5	13.5
DEPTH UNIT	FT	FT	FT	FT	FT	FT	FT
Pesticides/PCBs (ug/L)							
4,4'-DDD	0.11 U	0.1 U		0.11 U		0.11 U	
4,4'-DDE	0.11 U	0.1 U		0.11 U		0.11 U	
4,4'-DDT	0.11 U	0.1 U		0.11 U		0.11 U	
ALDRIN	0.053 U	0.051 U		0.054 U		0.053 U	
ALPHA-BHC	0.053 U	0.051 U		0.054 U		0.053 U	
ALPHA-CHLORDANE	0.053 U	0.051 U		0.054 U		0.053 U	
AROCLOR-1016	1.1 U	1 U		1.1 U		1.1 U	
AROCLOR-1221	2.1 U	2 U		2.2 U		2.1 U	
AROCLOR-1232	1.1 U	1 U		1.1 U		1.1 U	
AROCLOR-1242	1.1 U	1 U		1.1 U		1.1 U	
AROCLOR-1248	1.1 U	1 U		1.1 U		1.1 U	
AROCLOR-1254	1.1 U	1 U		1.1 U		1.1 U	
AROCLOR-1260	1.1 U	1 U		1.1 U		1.1 U	
BETA-BHC	0.053 U	0.051 U		0.054 U		0.053 U	
DELTA-BHC	0.053 UJ	0.051 UJ		0.054 UJ		0.053 UJ	
DIELDRIN	0.11 U	0.1 U		0.11 U		0.11 U	
ENDOSULFAN I	0.053 U	0.051 U		0.054 U		0.053 U	
ENDOSULFAN II	0.11 U	0.1 U		0.11 U		0.11 U	
ENDOSULFAN SULFATE	0.11 U	0.1 U		0.11 U		0.11 U	
ENDRIN	0.11 U	0.1 U		0.11 U		0.11 U	
ENDRIN ALDEHYDE	0.11 U	0.1 U		0.11 U		0.11 U	
ENDRIN KETONE	0.11 U	0.1 U		0.11 U		0.11 U	
GAMMA-BHC (LINDANE)	0.053 U	0.051 U		0.054 U		0.053 U	
GAMMA-CHLORDANE	0.053 U	0.051 U		0.054 U		0.053 U	
HEPTACHLOR	0.053 U	0.051 U		0.054 U		0.053 U	
HEPTACHLOR EPOXIDE	0.053 U	0.051 U		0.054 U		0.053 U	
METHOXYCHLOR	0.53 U	0.51 U		0.54 U		0.53 U	
TOXAPHENE	5.3 U	5.1 U		5.4 U		5.3 U	
Inorganics (ug/L)							
ALUMINUM	72.5 U	142 U	101 U	843 U	56 U	999 U	392 U
ANTIMONY	2 U	2 U	12.3	2 U	4.6 U	2 U	4.6 U
ARSENIC	1.9 U	1.9 U	5.3 U	1.9 U	5.3 U	1.9 U	5.3 U
BARIUM	38.1 U	41.1 U	29.4	42.4 U	41.6	41 U	29.3
BERYLLIUM	0.17 U	0.25 U	0.18 U	0.52 U	0.13 U	0.17 U	0.13 U
CADMIUM	2.3 U	2.3 U	0.28 U	2.3 U	0.21 U	2.3 U	0.14 U
CALCIUM	53600	59200	19800	97100	132000	66800	31000
CHROMIUM	3.4 U	3.4 U	2.1 J	14.3 U	1.1 U	19.7 U	1.1 U
COBALT	2.7 U	2.7 U	1.6 U	4 U	1.9 U	2.9 U	1.2 U
COPPER	3.1 U	2.1 U	12.8 U	1.8 U	5 U	5.4 U	5 U
IRON	117 U	314 U	61 U	1510 U	111 U	2120	61 U
LEAD	1.3 J	1.3 U	2.2 U	2.8	2.2 U	1.5 J	2.2 U
MAGNESIUM	4200 U	4570 U	1020 U	15900	25400	11700	3820
MANGANESE	22.7 U	23.6 U	4 U	1100	2290	150	8.8 U
MERCURY	0.05 U	0.12 U	0.032 UJ	0.13 U	0.032 UJ	0.09 U	0.032 UJ
NICKEL	9 U	9.6 U	2.1 U	20.4 U	3.9 U	22.4 U	1.5 U
POTASSIUM	5760	5930	7030	6670	3700	8760	3350
SELENIUM	3.2 U	3.2 U	6.6 J	3.2 U	13.4	3.2 U	8.5 J
SILVER	2.7 U	2.7 U	0.59 U	2.7 U	0.59 U	2.7 U	0.59 U
SODIUM	230000	239000	98300	112000	138000	236000	306000
THALLIUM	3.2 U	3.2 U	4.2 U	3.2 U	4.2 U	3.2 U	4.2 U
VANADIUM	3.2 U	3.2 U	3.4 U	3.2 U	0.96 U	3.4 U	0.96 U
ZINC	7	5.1	32.4 U	6.4 U	15.5 U	9.8	20 U

	SITE 30 UPGRADIENT WELL			SITE 30 GROUNDWATER WELLS			
SAMPLE ID	B184-MW-01-11	B184-MW-01-11-D	B184GWMW011208	B184-MW-02-11	B184GWMW021208	B184-MW-03-11	B184GWMW031208
LOCATION ID	B184-MW01	B184-MW01	B184-MW01	B184-MW02	B184-MW02	B184-MW03	B184-MW03
SAMPLE DATE	19980804	19980804	20081215	19980805	20081217	19980805	20081217
SAMPLE TYPE	NORMAL	NORMAL	NORMAL	NORMAL	NORMAL	NORMAL	NORMAL
QC TYPE	NM	FD	NM	NM	NM	NM	NM
SACODE	ORIG	DUP	NORMAL	NORMAL	NORMAL	NORMAL	NORMAL
MATRIX	GW	GW	GW	GW	GW	GW	GW
DUPLICATE		B184-MW-01-11					
TOP	3.5	3.5	3.5	10	10	3.5	3.5
BOTTOM	13.5	13.5	13.5	20	20	13.5	13.5
DEPTH UNIT	FT	FT	FT	FT	FT	FT	FT
Filtered Inorganics (ug/L)							
ALUMINUM			121 U		56 U		56 U
ANTIMONY			4.6 U		4.6 U		4.6 U
ARSENIC			5.3 U		5.3 U		5.3 U
BARIUM			24.6		37.6		25.7
BERYLLIUM			0.13 U		0.13 U		0.13 U
CADMIUM			0.14 U		0.14 U		0.14 U
CALCIUM			20200		137000		30200
CHROMIUM			1.8 J		1.1 U		1.1 U
COBALT			1.2 U		2.7		1.2 U
COPPER			6.8 J		5 U		5 U
IRON			61 U		102 J		61 U
LEAD			2.2 U		2.2 U		2.2 U
MAGNESIUM			1030		25500		3660
MANGANESE			3.5 U		2310		7.3 U
MERCURY			0.032 U		0.032 U		0.032 U
NICKEL			1.5 U		5		1.5 U
POTASSIUM			6650		4890		3400
SELENIUM			6.6 U		6.6 U		6.6 U
SILVER			1.8 U		1.8 U		1.6 U
SODIUM			97600		163000		340000
THALLIUM			4.2 U		4.2 U		4.2 U
VANADIUM			2.1		0.96 U		0.96 U
ZINC			25.1		11 J		17.2
Miscellaneous Parameters							
ALKALINITY MG/L							
BROMIDE MG/L	2 U	2 U		2 U		2 U	
CARBONATE ALKALINITY MG/L	190	190		230		170	
CHLORIDE MG/L	230	240		130		230	
CYANIDE	10 U	10 U		10 U		10 U	
HEXAVALENT CHROMIUM MG/L	0.01 U	0.01 U		0.011		0.011	
NITRATE MG/L	3.3 J	3.1 J		0.05 UJ		0.83 J	
PH S.U.	7.5	7.6		7		7.5	
SALINITY PPT	0.8	0.68		0.39		0.52	
SULFATE MG/L	24	25		16		26	
TOTAL ORGANIC CARBON MG/L	2.7	2.5		2		2.6	
TOTAL SUSPENDED SOLIDS MG/L			10 U		10 U		10 U

	SITE 30 DOWNGRADIENT WELL (not at Site 32)		SITE 32 WELLS DOWNGRADIENT OF SITE 30					
SAMPLE ID	B184-MW-04-11	B184GWMW041208	FA-01-GW-10	TPGWFA010503	TPGWFA010503-F	TPGWFA011208	FA-01B-GW-10	TPGWFA01B0503
LOCATION ID	B184-MW04	B184-MW04	FA-01	FA-01	FA-01	FA-01	FA-01B	FA-01B
SAMPLE DATE	19980806	20081216	19971101	20030508	20030508	20081215	19971101	20030508
SAMPLE TYPE	NORMAL	NORMAL	NORMAL	NORMAL	NORMAL	NORMAL	NORMAL	NORMAL
QC TYPE	NM	NM	NM	NM	NM	NM	NM	NM
SACODE	NORMAL	NORMAL	NORMAL	NORMAL	NORMAL	NORMAL	NORMAL	NORMAL
MATRIX	GW	GW	GW	GW	GW	GW	GW	GW
DUPLICATE								
TOP	8	8	4	4	4	4	40	40
BOTTOM	18	18	14	14	14	14	55	55
DEPTH UNIT	FT	FT	FT	FT	FT	FT	FT	FT
Volatile Organics (ug/L)								
1,1,1-TRICHLOROETHANE	10 U							
1,1,2,2-TETRACHLOROETHANE	10 U							
1,1,2-TRICHLOROETHANE	10 U							
1,1,2-TRICHLOROTRIFLUOROETHANE	10 U							
1,1-DICHLOROETHANE	10 U							
1,1-DICHLOROETHENE	10 U							
1,2-DICHLOROETHANE	10 U							
1,2-DICHLOROPROPANE	10 U							
2-BUTANONE	10 U							
2-HEXANONE	10 U							
4-METHYL-2-PENTANONE	10 U							
ACETONE	29 U							
BENZENE	10 U							
BROMODICHLOROMETHANE	10 U							
BROMOFORM	10 U							
BROMOMETHANE	10 U							
CARBON DISULFIDE	10 U							
CARBON TETRACHLORIDE	10 U							
CHLOROBENZENE	10 U							
CHLORODIBROMOMETHANE	10 U							
CHLOROETHANE	10 U							
CHLOROFORM	10 U							
CHLOROMETHANE	10 U							
CIS-1,3-DICHLOROPROPENE	10 U							
ETHYLBENZENE	10 U							
METHYLENE CHLORIDE	10 U							
STYRENE	10 U							
TETRACHLOROETHENE	10 U							
TOLUENE	10 U							
TOTAL 1,2-DICHLOROETHENE	10 U							
TOTAL XYLENES	10 U							
TRANS-1,3-DICHLOROPROPENE	10 U							
TRICHLOROETHENE	10 U							
VINYL CHLORIDE	10 U							
Semivolatile Organics (ug/L)								
1,2,4-TRICHLOROBENZENE	10 U			0.9 U				0.9 U
1,2-DICHLOROBENZENE	10 U			0.7 U				0.7 U
1,3-DICHLOROBENZENE	10 U			0.6 U				0.6 U
1,4-DICHLOROBENZENE	10 U			0.8 U				0.8 U
2,2'-OXYBIS(1-CHLOROPROPANE)	10 U			1 UJ				1 UJ
2,4,5-TRICHLOROPHENOL	25 U			2 U				2 U
2,4,6-TRICHLOROPHENOL	10 U			2 U				2 U
2,4-DICHLOROPHENOL	10 U			2 U				2 U
2,4-DIMETHYLPHENOL	10 U			2 U				2 U
2,4-DINITROPHENOL	25 U			5 UJ				5 UJ
2,4-DINITROTOLUENE	10 U			0.7 UJ				0.7 UJ
2,6-DINITROTOLUENE	10 U			2 U				2 U
2-CHLORONAPHTHALENE	10 U			3 U				3 U
2-CHLOROPHENOL	10 U			2 U				2 U
2-METHYLNAPHTHALENE	10 U			0.08 U		0.1 U		0.08 U
2-METHYLPHENOL	10 U			1 U				1 U
2-NITROANILINE	25 U			0.8 U				0.8 U
2-NITROPHENOL	10 U			2 U				2 U

	SITE 30 DOWNGRADIENT WELL (not at Site 32)		SITE 32 WELLS DOWNGRADIENT OF SITE 30					
SAMPLE ID	B184-MW-04-11	B184GWMW041208	FA-01-GW-10	TPGWFA010503	TPGWFA010503-F	TPGWFA011208	FA-01B-GW-10	TPGWFA01B0503
LOCATION ID	B184-MW04	B184-MW04	FA-01	FA-01	FA-01	FA-01	FA-01B	FA-01B
SAMPLE DATE	19980806	20081216	19971101	20030508	20030508	20081215	19971101	20030508
SAMPLE TYPE	NORMAL	NORMAL	NORMAL	NORMAL	NORMAL	NORMAL	NORMAL	NORMAL
QC TYPE	NM	NM	NM	NM	NM	NM	NM	NM
SACODE	NORMAL	NORMAL	NORMAL	NORMAL	NORMAL	NORMAL	NORMAL	NORMAL
MATRIX	GW	GW	GW	GW	GW	GW	GW	GW
DUPLICATE								
TOP	8	8	4	4	4	4	40	40
BOTTOM	18	18	14	14	14	14	55	55
DEPTH UNIT	FT	FT	FT	FT	FT	FT	FT	FT
3,3'-DICHLOROBENZIDINE	10 U			2 UJ				2 UJ
3-NITROANILINE	25 U			2 U				2 U
4,6-DINITRO-2-METHYLPHENOL	25 U			7 U				7 U
4-BROMOPHENYL PHENYL ETHER	10 U			1 U				1 U
4-CHLORO-3-METHYLPHENOL	10 U			1 U				1 U
4-CHLOROANILINE	10 U			1 U				1 U
4-CHLOROPHENYL PHENYL ETHER	10 U			1 U				1 U
4-METHYLPHENOL	10 U			2 U				2 U
4-NITROANILINE	25 UJ			2 UJ				2 UJ
4-NITROPHENOL	25 U			3 U				3 U
ACENAPHTHENE	10 U			0.08 U		0.1 U		0.08 U
ACENAPHTHYLENE	10 U			0.05 U		0.1 U		0.05 U
ANTHRACENE	10 U			0.08 U		0.1 U		0.08 U
BENZO(A)ANTHRACENE	10 U			0.1 U		0.1 U		0.1 U
BENZO(A)PYRENE	10 U			0.08 U		0.1 U		0.08 U
BENZO(B)FLUORANTHENE	10 U			0.08 U		0.1 U		0.08 U
BENZO(G,H,I)PERYLENE	10 U			0.08 U		0.1 U		0.08 U
BENZO(K)FLUORANTHENE	10 U			0.08 U		0.1 U		0.08 U
BIS(2-CHLOROETHOXY)METHANE	10 U			0.8 U				0.8 U
BIS(2-CHLOROETHYL)ETHER	10 U			1 U				1 U
BIS(2-ETHYLHEXYL)PHTHALATE	10 U			9 U				9 U
BUTYL BENZYL PHTHALATE	10 U			0.7 U				0.7 U
CARBAZOLE	10 U			0.8 U				0.8 U
CHRYSENE	10 U			0.07 U		0.1 U		0.07 U
DI-N-BUTYL PHTHALATE	1 J			2 U				2 U
DI-N-OCTYL PHTHALATE	10 U			1 U				1 U
DIBENZO(A,H)ANTHRACENE	10 U			0.1 U		0.1 U		0.1 U
DIBENZOFURAN	10 U			1 U				1 U
DIETHYL PHTHALATE	10 U			0.6 U				0.6 U
DIMETHYL PHTHALATE	10 U			0.7 U				0.7 U
FLUORANTHENE	10 U			0.1 U		0.1 U		0.1 U
FLUORENE	10 U			0.06 U		0.1 U		0.06 U
HEXACHLOROBENZENE	10 U			0.7 U				0.7 U
HEXACHLOROBUTADIENE	10 U			2 U				2 U
HEXACHLOROCYCLOPENTADIENE	10 U			1 U				1 U
HEXACHLOROETHANE	10 U			2 U				2 U
INDENO(1,2,3-CD)PYRENE	10 U			0.09 U		0.1 U		0.1 U
ISOPHORONE	10 U			0.8 U				0.8 U
N-NITROSO-DI-N-PROPYLAMINE	10 U			2 U				2 U
N-NITROSODIPHENYLAMINE	10 U			2 U				2 U
NAPHTHALENE	10 U			0.05 U		0.1 U		0.05 U
NITROBENZENE	10 U			1 U				1 U
PENTACHLOROPHENOL	25 U			5 U				5 U
PHENANTHRENE	10 U			0.08 U		0.1 U		0.08 U
PHENOL	0.9 J			2 U				2 U
PYRENE	10 U			0.08 U		0.1 U		0.08 U

	SITE 30 DOWNGRADIENT WELL (not at Site 32)		SITE 32 WELLS DOWNGRADIENT OF SITE 30					
SAMPLE ID	B184-MW-04-11	B184GWMW041208	FA-01-GW-10	TPGWFA010503	TPGWFA010503-F	TPGWFA011208	FA-01B-GW-10	TPGWFA01B0503
LOCATION ID	B184-MW04	B184-MW04	FA-01	FA-01	FA-01	FA-01	FA-01B	FA-01B
SAMPLE DATE	19980806	20081216	19971101	20030508	20030508	20081215	19971101	20030508
SAMPLE TYPE	NORMAL	NORMAL	NORMAL	NORMAL	NORMAL	NORMAL	NORMAL	NORMAL
QC TYPE	NM	NM	NM	NM	NM	NM	NM	NM
SACODE	NORMAL	NORMAL	NORMAL	NORMAL	NORMAL	NORMAL	NORMAL	NORMAL
MATRIX	GW	GW	GW	GW	GW	GW	GW	GW
DUPLICATE								
TOP	8	8	4	4	4	4	40	40
BOTTOM	18	18	14	14	14	14	55	55
DEPTH UNIT	FT	FT	FT	FT	FT	FT	FT	FT
Pesticides/PCBs (ug/L)								
4,4'-DDD	0.1 U		0.1 U	0.026 U			0.11 U	0.026 U
4,4'-DDE	0.1 U		0.1 U	0.026 U			0.11 U	0.026 U
4,4'-DDT	0.1 U		0.1 U	0.028 U			0.11 U	0.028 U
ALDRIN	0.051 U		0.051 U	0.02 U			0.053 U	0.02 U
ALPHA-BHC	0.051 U		0.051 U	0.023 U			0.053 U	0.023 U
ALPHA-CHLORDANE	0.051 U		0.051 U	0.018 U			0.053 U	0.018 U
AROCLOR-1016	1 U		1 U	0.11 U			1.1 U	0.11 U
AROCLOR-1221	2 U		2 U	0.28 U			2.1 U	0.28 U
AROCLOR-1232	1 U		1 U	0.3 U			1.1 U	0.3 U
AROCLOR-1242	1 U		1 U	0.23 U			1.1 U	0.23 U
AROCLOR-1248	1 U		1 U	0.12 U			1.1 U	0.12 U
AROCLOR-1254	1 U		1 U	0.15 U			1.1 U	0.15 U
AROCLOR-1260	1 U		1 U	0.11 U			1.1 U	0.11 UJ
BETA-BHC	0.051 U		0.051 U	0.039 U			0.053 U	0.039 U
DELTA-BHC	0.051 UJ		0.051 U	0.027 UJ			0.053 U	0.027 UJ
DIELDRIN	0.1 U		0.1 U	0.016 U			0.11 U	0.016 U
ENDOSULFAN I	0.051 U		0.051 U	0.017 U			0.053 U	0.017 U
ENDOSULFAN II	0.1 U		0.1 U	0.015 U			0.11 U	0.015 U
ENDOSULFAN SULFATE	0.1 U		0.1 U	0.021 UJ			0.11 U	0.021 UJ
ENDRIN	0.1 U		0.1 U	0.017 U			0.11 U	0.017 U
ENDRIN ALDEHYDE	0.1 U		0.1 U	0.02 U			0.11 U	0.02 U
ENDRIN KETONE	0.1 U		0.1 U	0.019 U			0.11 U	0.019 U
GAMMA-BHC (LINDANE)	0.051 U		0.051 U	0.02 U			0.053 U	0.02 U
GAMMA-CHLORDANE	0.051 U		0.051 U	0.018 U			0.053 U	0.018 U
HEPTACHLOR	0.051 U		0.051 U	0.022 U			0.053 U	0.022 U
HEPTACHLOR EPOXIDE	0.051 U		0.051 U	0.021 U			0.053 U	0.021 U
METHOXYCHLOR	0.51 U		0.51 U	0.042 U			0.53 U	0.042 U
TOXAPHENE	5.1 U		5.1 U	0.86 U			5.3 U	0.86 U
Inorganics (ug/L)								
ALUMINUM	42.4 U	56 U	77.7 U	101 U		56 U	10 UJ	101 U
ANTIMONY	2 U	4.6 U	2.5 UJ	6.7 U		4.6 U	2.5 UJ	1.3 U
ARSENIC	1.9 U	5.3 U	2.5 U	9 U		5.3 U	2.5 U	2.6 J
BARIUM	40.3 U	69	12.5 J	9.8		12.8 J	46.7	31
BERYLLIUM	0.17 U	0.13 U	0.11 UJ	1.6 U		0.13 U	0.11 UJ	0.23 U
CADMIUM	2.3 U	0.22 U	0.22 U	1.4 U		0.44 U	0.22 U	0.33 J
CALCIUM	60600	101000	363000 J	337000		267000	180000 J	108000
CHROMIUM	10.1 U	1.1 U	2.3 J	7.1 U		1.1 U	0.68 UJ	0.86 U
COBALT	2.7 U	1.2 U	0.8 UJ	4 U		1.2 UJ	0.8 UJ	1.1 U
COPPER	2.3 U	5 U	14.7 J	22.9 U		5 U	2.7 U	3 U
IRON	79.2 U	61 U	229	303 U		61 U	282	51 U
LEAD	3.6	2.2 U	1.7 J	4.6 UJ		2.2 U	1.3 U	0.91 UJ
MAGNESIUM	7320	15400	1240000	1020000		901000	282000	163000
MANGANESE	66.2	0.96 U	3 J	3.1 U		0.96 U	290	79.2
MERCURY	0.09 U	0.032 UJ	0.13 U	0.13 U		0.032 UJ	0.09 U	0.03 U
NICKEL	24.4 U	9.7 U	3.2 J	5.4 J		1.5 U	9.3 J	7.1
POTASSIUM	8050	8310	422000	302000		269000	81800	59300
SELENIUM	3.2 U	15.6	1.9 UJ	10.5 U		19.8 J	1.9 UJ	2.1 U
SILVER	2.7 U	0.59 U	6.2 J	2.9 U		0.59 UJ	1.4 J	0.57 U
SODIUM	38600	168000	10300000	8530000		7510000	2270000	1700000
THALLIUM	3.2 U	4.2 U	4.8 UJ	0.4 U		26.7 J	4.8 UJ	0.2 U
VANADIUM	3.2 U	0.96 U	0.68 J	1.8 U		1.1 U	0.55 UJ	0.4 U
ZINC	11	13.7 U	53.2 U	21.2		21.6 U	12.3 U	5

	SITE 30 DOWNGRADIENT WELL (not at Site 32)		SITE 32 WELLS DOWNGRADIENT OF SITE 30					
SAMPLE ID	B184-MW-04-11	B184GWMW041208	FA-01-GW-10	TPGWFA010503	TPGWFA010503-F	TPGWFA011208	FA-01B-GW-10	TPGWFA01B0503
LOCATION ID	B184-MW04	B184-MW04	FA-01	FA-01	FA-01	FA-01	FA-01B	FA-01B
SAMPLE DATE	19980806	20081216	19971101	20030508	20030508	20081215	19971101	20030508
SAMPLE TYPE	NORMAL	NORMAL	NORMAL	NORMAL	NORMAL	NORMAL	NORMAL	NORMAL
QC TYPE	NM	NM	NM	NM	NM	NM	NM	NM
SACODE	NORMAL	NORMAL	NORMAL	NORMAL	NORMAL	NORMAL	NORMAL	NORMAL
MATRIX	GW	GW	GW	GW	GW	GW	GW	GW
DUPLICATE								
TOP	8	8	4	4	4	4	40	40
BOTTOM	18	18	14	14	14	14	55	55
DEPTH UNIT	FT	FT	FT	FT	FT	FT	FT	FT
Filtered Inorganics (ug/L)								
ALUMINUM		56 U			40.9 U	56 U		
ANTIMONY		4.6 U			6.7 U	4.6 U		
ARSENIC		5.3 U			9 U	5.3 U		
BARIUM		63.6			9.8	8.7 J		
BERYLLIUM		0.13 U			1.2 U	0.13 U		
CADMIUM		0.14 U			1.4 U	0.15 J		
CALCIUM		104000			342000	236000		
CHROMIUM		1.1 U			2.9 U	1.1 U		
COBALT		1.2 U			4.5 U	1.7 J		
COPPER		5 U			18.6 U	5 U		
IRON		61 U			6.1 U	61 U		
LEAD		2.2 U			4.6 UJ	2.2 UJ		
MAGNESIUM		15500			1000000	916000		
MANGANESE		0.96 U			0.75 U	0.96 U		
MERCURY		0.032 U			0.16 U	0.032 U		
NICKEL		10.6			3.7 J	4.8 J		
POTASSIUM		8290			373000	282000		
SELENIUM		6.6 U			10.5 U	6.6 U		
SILVER		1.8 U			2.9 U	1 U		
SODIUM		173000			8320000	8150000		
THALLIUM		4.2 U			0.4 U	4.2 U		
VANADIUM		0.96 U			1.8 U	0.96 U		
ZINC		10.8 J			19.3	19.6		
Miscellaneous Parameters								
ALKALINITY MG/L			110				180	
BROMIDE MG/L	2 U		48				13	
CARBONATE ALKALINITY MG/L	160		110				180	
CHLORIDE MG/L	14		19000 J				2500 J	
CYANIDE	10 U		20 U				20 U	
HEXAVALENT CHROMIUM MG/L	0.01 U							
NITRATE MG/L	4.9 J		0.29 J				0.05 UJ	
PH S.U.	7		7.7				7.9	
SALINITY PPT	0.18							
SULFATE MG/L	53		2100				500	
TOTAL ORGANIC CARBON MG/L	1.9		1.7 J				4.7 J	
TOTAL SUSPENDED SOLIDS MG/L		10 U		17 J		34		4 UJ

	SITE 32 WELLS DOWNGRADIENT OF SITE 30					
SAMPLE ID	TPGWFA01B0503-F	TPGWFA01B1208	TPGWMW100503	TPGWMW100503-F	TPGWMW1012008	TPGWMW121208
LOCATION ID	FA-01B	FA-01B	TP-MW10	TP-MW10	TP-MW10	TP-MW12
SAMPLE DATE	20030508	20081216	20030509	20030509	20081218	20081218
SAMPLE TYPE	NORMAL	NORMAL	NORMAL	NORMAL	NORMAL	NORMAL
QC TYPE	NM	NM	NM	NM	NM	NM
SACODE	NORMAL	NORMAL	NORMAL	NORMAL	NORMAL	NORMAL
MATRIX	GW	GW	GW	GW	GW	GW
DUPLICATE						
TOP	40	40	6	6	6	8
BOTTOM	55	55	13	13	13	18
DEPTH UNIT	FT	FT	FT	FT	FT	FT
Volatile Organics (ug/L)						
1,1,1-TRICHLOROETHANE						
1,1,2,2-TETRACHLOROETHANE						
1,1,2-TRICHLOROETHANE						
1,1,2-TRICHLOROTRIFLUOROETHANE						
1,1-DICHLOROETHANE						
1,1-DICHLOROETHENE						
1,2-DICHLOROETHANE						
1,2-DICHLOROPROPANE						
2-BUTANONE						
2-HEXANONE						
4-METHYL-2-PENTANONE						
ACETONE						
BENZENE						
BROMODICHLOROMETHANE						
BROMOFORM						
BROMOMETHANE						
CARBON DISULFIDE						
CARBON TETRACHLORIDE						
CHLOROBENZENE						
CHLORODIBROMOMETHANE						
CHLOROETHANE						
CHLOROFORM						
CHLOROMETHANE						
CIS-1,3-DICHLOROPROPENE						
ETHYLBENZENE						
METHYLENE CHLORIDE						
STYRENE						
TETRACHLOROETHENE						
TOLUENE						
TOTAL 1,2-DICHLOROETHENE						
TOTAL XYLENES						
TRANS-1,3-DICHLOROPROPENE						
TRICHLOROETHENE						
VINYL CHLORIDE						
Semivolatile Organics (ug/L)						
1,2,4-TRICHLOROBENZENE			0.9 U			
1,2-DICHLOROBENZENE			0.7 U			
1,3-DICHLOROBENZENE			0.6 U			
1,4-DICHLOROBENZENE			0.8 U			
2,2'-OXYBIS(1-CHLOROPROPANE)			1 U			
2,4,5-TRICHLOROPHENOL			2 U			
2,4,6-TRICHLOROPHENOL			2 U			
2,4-DICHLOROPHENOL			2 U			
2,4-DIMETHYLPHENOL			2 U			
2,4-DINITROPHENOL			5 U			
2,4-DINITROTOLUENE			0.7 U			
2,6-DINITROTOLUENE			2 U			
2-CHLORONAPHTHALENE			3 U			
2-CHLOROPHENOL			2 U			
2-METHYLNAPHTHALENE		0.1 U	0.08 U		0.1 U	0.1 U
2-METHYLPHENOL			1 U			
2-NITROANILINE			0.8 U			
2-NITROPHENOL			2 U			

	SITE 32 WELLS DOWNGRADIENT OF SITE 30					
SAMPLE ID	TPGWFA01B0503-F	TPGWFA01B1208	TPGWMW100503	TPGWMW100503-F	TPGWMW1012008	TPGWMW121208
LOCATION ID	FA-01B	FA-01B	TP-MW10	TP-MW10	TP-MW10	TP-MW12
SAMPLE DATE	20030508	20081216	20030509	20030509	20081218	20081218
SAMPLE TYPE	NORMAL	NORMAL	NORMAL	NORMAL	NORMAL	NORMAL
QC TYPE	NM	NM	NM	NM	NM	NM
SACODE	NORMAL	NORMAL	NORMAL	NORMAL	NORMAL	NORMAL
MATRIX	GW	GW	GW	GW	GW	GW
DUPLICATE						
TOP	40	40	6	6	6	8
BOTTOM	55	55	13	13	13	18
DEPTH UNIT	FT	FT	FT	FT	FT	FT
3,3'-DICHLOROBENZIDINE			2 U			
3-NITROANILINE			2 U			
4,6-DINITRO-2-METHYLPHENOL			7 U			
4-BROMOPHENYL PHENYL ETHER			1 U			
4-CHLORO-3-METHYLPHENOL			1 U			
4-CHLOROANILINE			1 U			
4-CHLOROPHENYL PHENYL ETHER			1 U			
4-METHYLPHENOL			2 U			
4-NITROANILINE			2 U			
4-NITROPHENOL			3 U			
ACENAPHTHENE		0.1 U	0.08 U		0.1 U	0.1 U
ACENAPHTHYLENE		0.1 U	0.05 U		0.1 U	0.1 U
ANTHRACENE		0.1 U	0.08 U		0.1 U	0.1 U
BENZO(A)ANTHRACENE		0.1 U	0.1 U		0.1 U	0.1 U
BENZO(A)PYRENE		0.1 U	0.08 U		0.1 U	0.1 U
BENZO(B)FLUORANTHENE		0.1 U	0.08 U		0.1 U	0.1 U
BENZO(G,H,I)PERYLENE		0.1 U	0.08 U		0.1 U	0.1 U
BENZO(K)FLUORANTHENE		0.1 U	0.08 U		0.1 U	0.1 U
BIS(2-CHLOROETHOXY)METHANE			0.8 U			
BIS(2-CHLOROETHYL)ETHER			1 U			
BIS(2-ETHYLHEXYL)PHTHALATE			9 U			
BUTYL BENZYL PHTHALATE			0.7 U			
CARBAZOLE			0.8 U			
CHRYSENE		0.1 U	0.07 U		0.1 U	0.1 U
DI-N-BUTYL PHTHALATE			2 U			
DI-N-OCTYL PHTHALATE			1 U			
DIBENZO(A,H)ANTHRACENE		0.1 U	0.1 U		0.1 U	0.1 U
DIBENZOFURAN			1 U			
DIETHYL PHTHALATE			0.6 U			
DIMETHYL PHTHALATE			0.7 U			
FLUORANTHENE		0.1 U	0.1 U		0.1 U	0.1 U
FLUORENE		0.1 U	0.06 U		0.1 U	0.1 U
HEXACHLOROBENZENE			0.7 U			
HEXACHLOROBUTADIENE			2 U			
HEXACHLOROCYCLOPENTADIENE			1 U			
HEXACHLOROETHANE			2 U			
INDENO(1,2,3-CD)PYRENE		0.1 U	0.1 U		0.1 U	0.1 U
ISOPHORONE			0.8 U			
N-NITROSO-DI-N-PROPYLAMINE			2 U			
N-NITROSODIPHENYLAMINE			2 U			
NAPHTHALENE		0.1 U	0.05 U		0.1 U	0.1 U
NITROBENZENE			1 U			
PENTACHLOROPHENOL			5 U			
PHENANTHRENE		0.1 U	0.08 U		0.1 U	0.1 U
PHENOL			2 U			
PYRENE		0.1 U	0.08 U		0.1 U	0.1 U

	SITE 32 WELLS DOWNGRADIENT OF SITE 30					
SAMPLE ID	TPGWFA01B0503-F	TPGWFA01B1208	TPGWMW100503	TPGWMW100503-F	TPGWMW1012008	TPGWMW121208
LOCATION ID	FA-01B	FA-01B	TP-MW10	TP-MW10	TP-MW10	TP-MW12
SAMPLE DATE	20030508	20081216	20030509	20030509	20081218	20081218
SAMPLE TYPE	NORMAL	NORMAL	NORMAL	NORMAL	NORMAL	NORMAL
QC TYPE	NM	NM	NM	NM	NM	NM
SACODE	NORMAL	NORMAL	NORMAL	NORMAL	NORMAL	NORMAL
MATRIX	GW	GW	GW	GW	GW	GW
DUPLICATE						
TOP	40	40	6	6	6	8
BOTTOM	55	55	13	13	13	18
DEPTH UNIT	FT	FT	FT	FT	FT	FT
Pesticides/PCBs (ug/L)						
4,4'-DDD			0.026 UJ			
4,4'-DDE			0.026 U			
4,4'-DDT			0.028 UJ			
ALDRIN			0.02 U			
ALPHA-BHC			0.023 U			
ALPHA-CHLORDANE			0.018 U			
AROCLOR-1016			0.11 U			
AROCLOR-1221			0.28 U			
AROCLOR-1232			0.3 U			
AROCLOR-1242			0.23 U			
AROCLOR-1248			0.12 U			
AROCLOR-1254			0.15 U			
AROCLOR-1260			0.11 UJ			
BETA-BHC			0.039 U			
DELTA-BHC			0.027 UJ			
DIELDRIN			0.016 U			
ENDOSULFAN I			0.017 U			
ENDOSULFAN II			0.015 U			
ENDOSULFAN SULFATE			0.021 UJ			
ENDRIN			0.017 U			
ENDRIN ALDEHYDE			0.02 UJ			
ENDRIN KETONE			0.019 UJ			
GAMMA-BHC (LINDANE)			0.02 U			
GAMMA-CHLORDANE			0.018 U			
HEPTACHLOR			0.022 U			
HEPTACHLOR EPOXIDE			0.021 U			
METHOXYCHLOR			0.042 U			
TOXAPHENE			0.86 U			
Inorganics (ug/L)						
ALUMINUM		56 U	86.1 U		56 U	56 U
ANTIMONY		4.6 U	6.7 U		4.6 U	4.6 U
ARSENIC		5.3 U	9 U		5.3 U	5.3 U
BARIUM		41.1	32.4		20.2 J	15.9 J
BERYLLIUM		0.13 U	1.2 U		0.13 U	0.13 U
CADMIUM		0.38 U	1.4 U		0.18 J	0.14 U
CALCIUM		145000	297000		212000	283000
CHROMIUM		1.1 U	2.9 U		1.1 U	1.1 U
COBALT		1.2 U	2.2 U		1.2 U	1.2 U
COPPER		5 U	4.6 U		5 U	5 U
IRON		111 U	34.3 U		61 U	61 U
LEAD		2.2 U	4.6 U		2.2 UJ	2.2 UJ
MAGNESIUM		217000	776000		727000	1020000
MANGANESE		58	25.8 U		0.96 U	0.96 U
MERCURY		0.032 UJ	0.12 U		0.032 UJ	0.032 UJ
NICKEL		13.9 U	11.7 U		3.5	1.5 U
POTASSIUM		73400	280000		218000	309000
SELENIUM		13.5	10.5 U		11.7 J	6.6 UJ
SILVER		0.59 U	2.9 U		0.59 U	0.59 U
SODIUM		2120000	6840000		6060000	8740000
THALLIUM		4.2 U	9.6 U		4.2 UJ	7.5 J
VANADIUM		0.96 U	1.8 U		0.96 UJ	1.1 U
ZINC		8.5 U	63.7 J		61	21.3

	SITE 32 WELLS DOWNGRADIENT OF SITE 30					
SAMPLE ID	TPGWFA01B0503-F	TPGWFA01B1208	TPGWMW100503	TPGWMW100503-F	TPGWMW1012008	TPGWMW121208
LOCATION ID	FA-01B	FA-01B	TP-MW10	TP-MW10	TP-MW10	TP-MW12
SAMPLE DATE	20030508	20081216	20030509	20030509	20081218	20081218
SAMPLE TYPE	NORMAL	NORMAL	NORMAL	NORMAL	NORMAL	NORMAL
QC TYPE	NM	NM	NM	NM	NM	NM
SACODE	NORMAL	NORMAL	NORMAL	NORMAL	NORMAL	NORMAL
MATRIX	GW	GW	GW	GW	GW	GW
DUPLICATE						
TOP	40	40	6	6	6	8
BOTTOM	55	55	13	13	13	18
DEPTH UNIT	FT	FT	FT	FT	FT	FT
Filtered Inorganics (ug/L)						
ALUMINUM	20.2 U	56 U		28.2 U	56 U	56 U
ANTIMONY	1.7 U	4.6 U		6.7 U	4.6 U	4.6 U
ARSENIC	1.8 U	5.3 U		9 U	5.3 U	5.3 U
BARIUM	31.5	34.8		31.9	19.9 J	14.2 J
BERYLLIUM	0.23 U	0.13 U		1.2 U	0.13 U	0.13 U
CADMIUM	0.28 U	0.16 J		1.4 U	0.16 J	0.14 U
CALCIUM	110000	138000		284000	219000	304000
CHROMIUM	0.57 U	1.1 U		2.9 U	1.1 U	1.1 U
COBALT	0.82 U	1.4 J		2.2 U	1.2 U	1.2 U
COPPER	2.2 U	5 U		4.6 U	5 U	5 U
IRON	33.8 U	121 J		6.1 U	61 U	61 U
LEAD	0.91 UJ	2.2 U		4.6 U	2.2 UJ	2.2 UJ
MAGNESIUM	169000	204000		759000	739000	1030000
MANGANESE	77.2	56.9		23.4 U	0.96 U	0.96 U
MERCURY	0.1 U	0.032 U		0.12 U	0.032 U	0.032 U
NICKEL	7.1	15.8		11.7 U	3.5	1.5 U
POTASSIUM	63900	65600		276000	210000	296000
SELENIUM	2.1 U	6.6 U		10.5 U	21.5	23.6
SILVER	0.57 U	0.59 U		2.9 U	0.59 UJ	0.59 UJ
SODIUM	1730000	2060000		6520000	6040000	8630000
THALLIUM	0.2 U	4.2 U		9.6 U	7.3 U	13.4 U
VANADIUM	4.7 U	0.96 U		1.8 U	0.96 UJ	0.96 UJ
ZINC	5.3	7.8 J		66.8	66.5	20.6 U
Miscellaneous Parameters						
ALKALINITY MG/L						
BROMIDE MG/L						
CARBONATE ALKALINITY MG/L						
CHLORIDE MG/L						
CYANIDE						
HEXAVALENT CHROMIUM MG/L						
NITRATE MG/L						
PH S.U.						
SALINITY PPT						
SULFATE MG/L						
TOTAL ORGANIC CARBON MG/L						
TOTAL SUSPENDED SOLIDS MG/L		10	12		27	36

P:\GIS\PORTSMOUTH_NSY\MAPDOCS\MXD\SITE30_XSECTION.MXD 03/22/10 TW

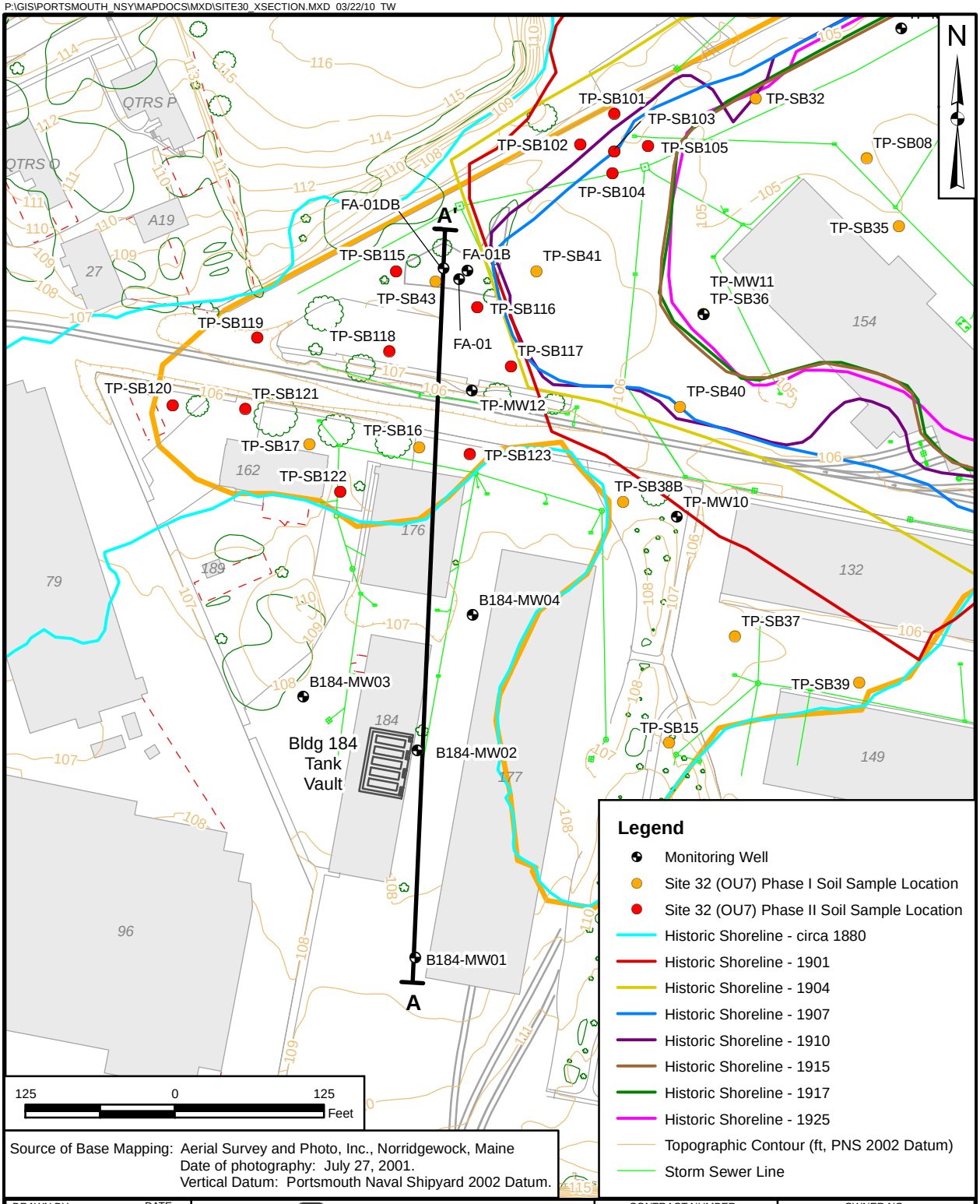

Source of Base Mapping: Aerial Survey and Photo, Inc., Norridgewock, Maine
Date of photography: July 27, 2001.
Vertical Datum: Portsmouth Naval Shipyard 2002 Datum.

DRAWN BY J. ENGLISH	DATE 01/21/10	Tetra Tech NUS, Inc.	CONTRACT NUMBER 0383 / OWNER NO. 0055
CHECKED BY M. GRAY	DATE 03/22/10	SITE 30 CROSS SECTION LOCATION MAP PORTSMOUTH NAVAL SHIPYARD KITTERY, MAINE	APPROVED BY — / DATE —
COST/SCHEDULE-AREA			APPROVED BY — / DATE —
SCALE AS NOTED			DRAWING NO. FIGURE 1 / REV 0

ACAD:0383CX07.dwg 03/22/10 CK

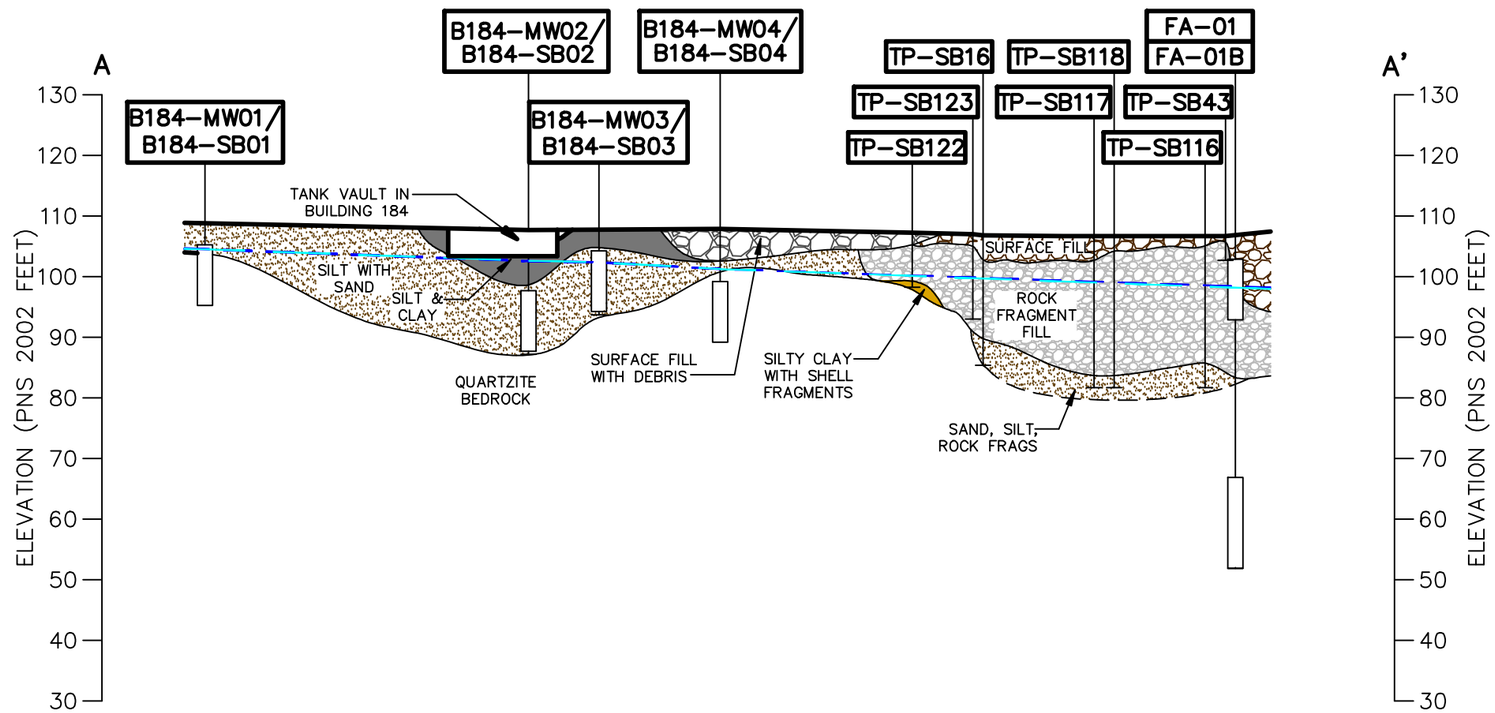

LEGEND

SURFACE FILL
SILT, SAND AND GRAVEL OR ROCK FRAGMENTS (GENERALLY GREENISH-GRAY QUARTZITE)

SURFACE FILL WITH DEBRIS
SURFACE FILL WITH MINOR DEBRIS, SUCH AS SLAG, ASH, METAL, CINDER, COAL CLINKERS, WOOD, PLASTIC, GLASS, CONCRETE, PORCELAIN, OR BRICK.

ROCK FRAGMENT FILL
LARGE ANGULAR ROCK FRAGMENTS COMPOSED OF DARK GRAY, FINE GRAINED QUARTZITE WITH TRACE (<5%) TO SOME (30 TO 45%) SAND, GRAVEL, AND/OR SILT/CLAY. ROCK FRAGMENTS FROM MATERIAL EXCAVATED FROM JENKIN'S GUT.

NATIVE SILT, SAND, AND CLAY
NATIVE SAND, SILT AND/OR CLAY, TYPICALLY WITH SHELL FRAGMENTS.

SILTY SAND
NATIVE SILTY SAND OR SILT AND SAND. TRACE GRAVEL POSSIBLE.

BEDROCK
DARK GRAY OR GREENISH-GRAY METAMORPHIC QUARTZITE.

0 75 150
HORIZONTAL SCALE IN FEET
0 25 50
VERTICAL SCALE IN FEET

NOTES:
1.) GROUNDWATER ELEVATIONS MEASURED ON DECEMBER 16, 2008.

DRAWN BY CK DATE 3/22/10	Tetra Tech NUS, Inc.	CROSS SECTION A-A' SITE 30 GROUNDWATER EVALUATION PORTSMOUTH NAVAL SHIPYARD KITTERY, MAINE	CONTRACT NO. 0383
CHECKED BY DATE			OWNER NO. CTO 0055
REVISED BY DATE			APPROVED BY DATE
SCALE AS NOTED			DRAWING NO. FIGURE 2 / REV. 0

FORM CADD NO. TTNUS-BH.DWG – REV 1 – 9/10/98

P:\GIS\PORTSMOUTH_NSY\MAPDOCS\MXD\SITE30_BEDROCK.MXD 03/22/10 JEE

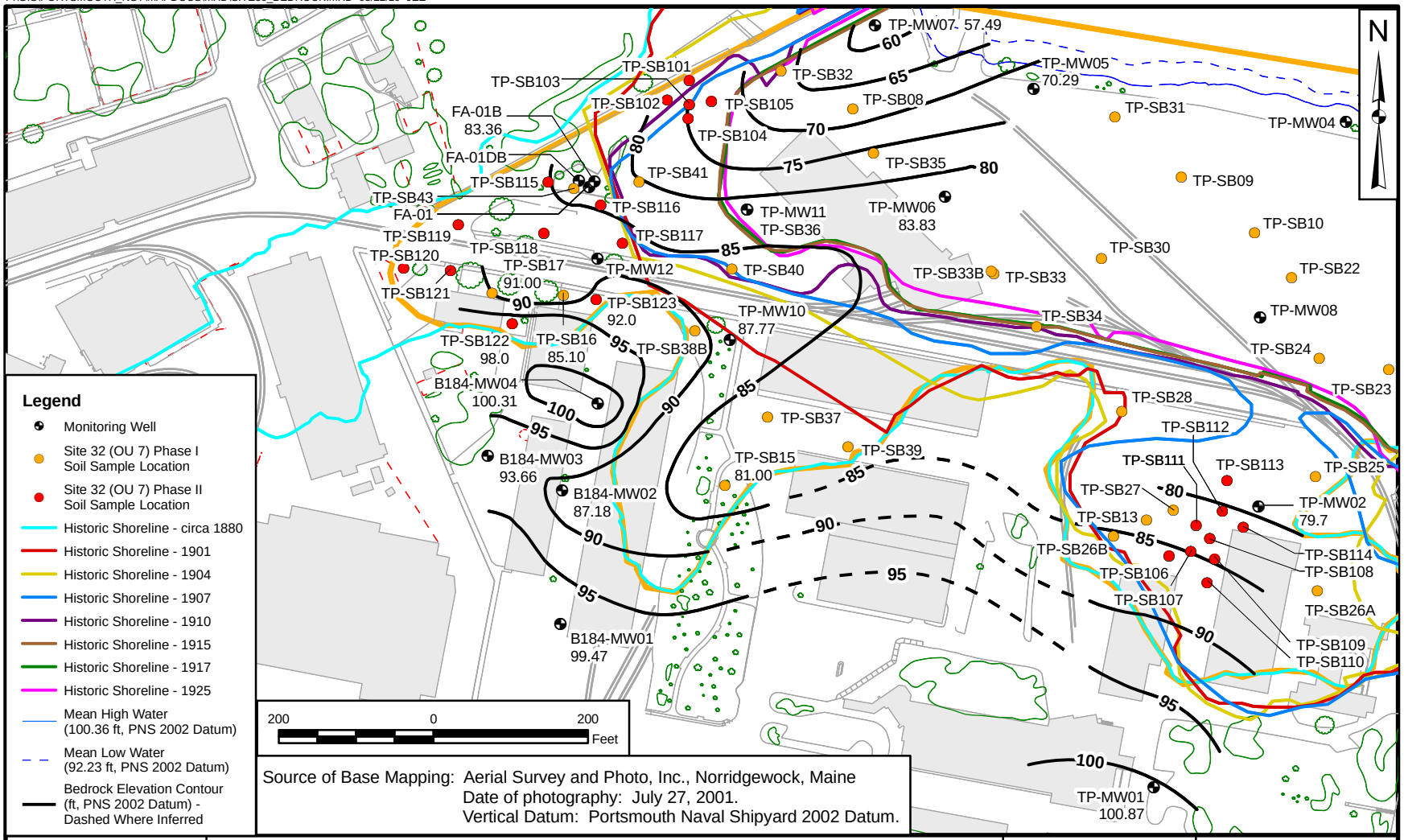

Source of Base Mapping: Aerial Survey and Photo, Inc., Norridgewock, Maine
Date of photography: July 27, 2001.
Vertical Datum: Portsmouth Naval Shipyard 2002 Datum.

DRAWN BY J. ENGLISH	DATE 01/21/10	Tetra Tech NUS, Inc.	CONTRACT NUMBER 0383 / OWNER NUMBER 0055
CHECKED BY M. GRAY	DATE 03/22/10	BEDROCK ELEVATION CONTOUR MAP SITE 30 PORTSMOUTH NAVAL SHIPYARD KITTERY, MAINE	APPROVED BY — / DATE —
COST/SCHEDULE-AREA			APPROVED BY — / DATE —
SCALE AS NOTED			DRAWING NO. FIGURE 3 / REV 0

REVISION 1
MARCH 2000

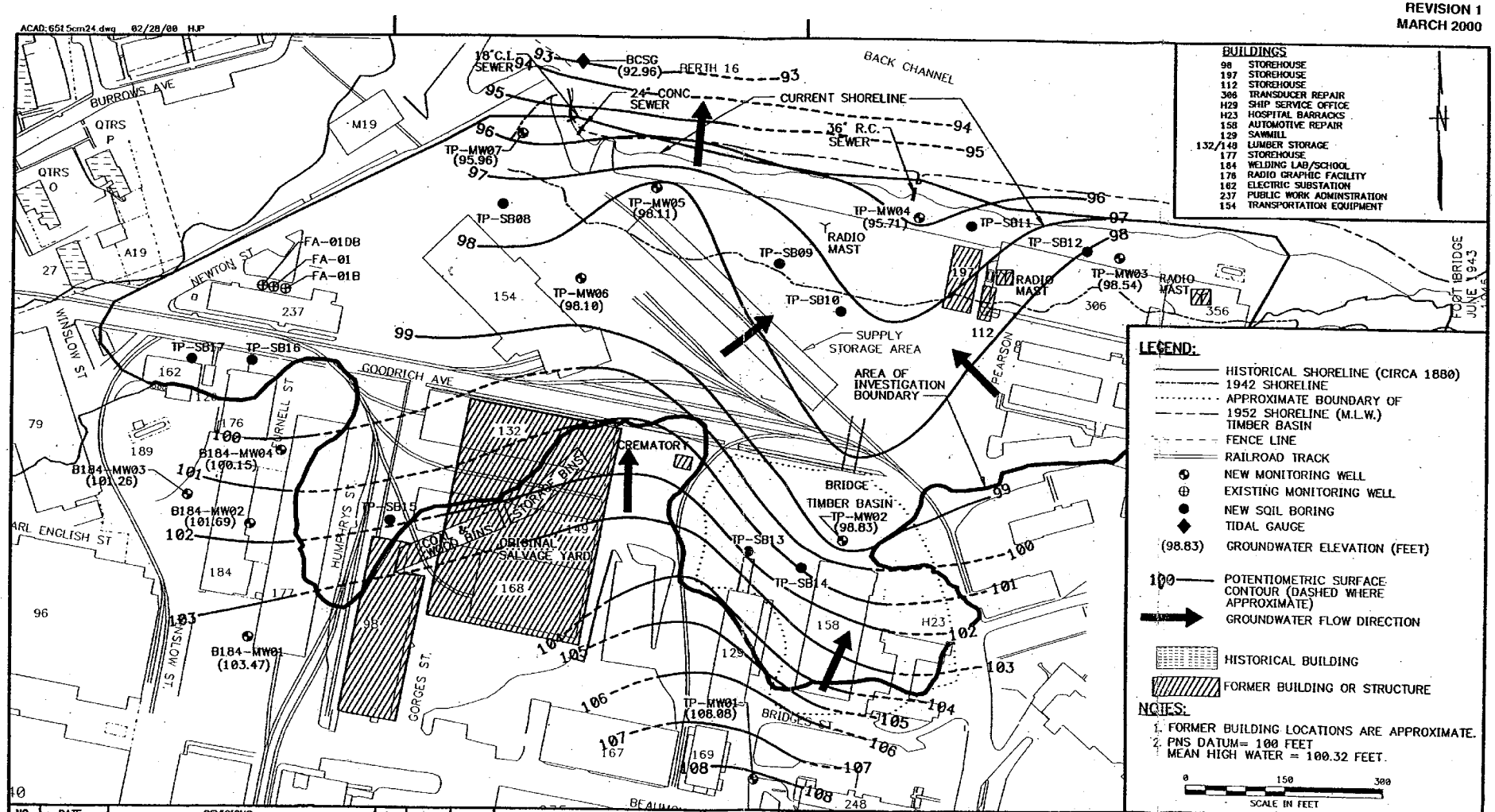

NO.	DATE	REVISIONS	BY	CHKD	APPD	REFERENCES

DRAWN BY DLT DATE 3/18/97
CHECKED BY MLM DATE 3/24/00
COST/SCHED-AREA
SCALE AS NOTED

Tetra Tech NUS, Inc.

POTENTIOMETRIC SURFACE MAP
(LOW TIDE-JULY 29, 1998)
TOPEKA PIER (SITE 32)
PORTSMOUTH NAVAL SHIPYARD
KITTERY, MAINE

CONTRACT NO. 6515
OWNER NO. 0232
APPROVED BY Mark L. Mengel DATE 3/24/00
APPROVED BY DATE
DRAWING NO. FIGURE 5-5
REV. 0

FORM CADD NO. SOUTH_BLDGN - REV 0 - 02/11/97

019907/P

FIGURE 4: SITE 30 GROUNDWATER EVALUATION
(Figure 5-5 from the Site Screening Report, TtNUS, May 2000)

CTO 0232

REVISION 1
MARCH 2000

ACAD:6515cm23.dwg 02/28/00 HJP

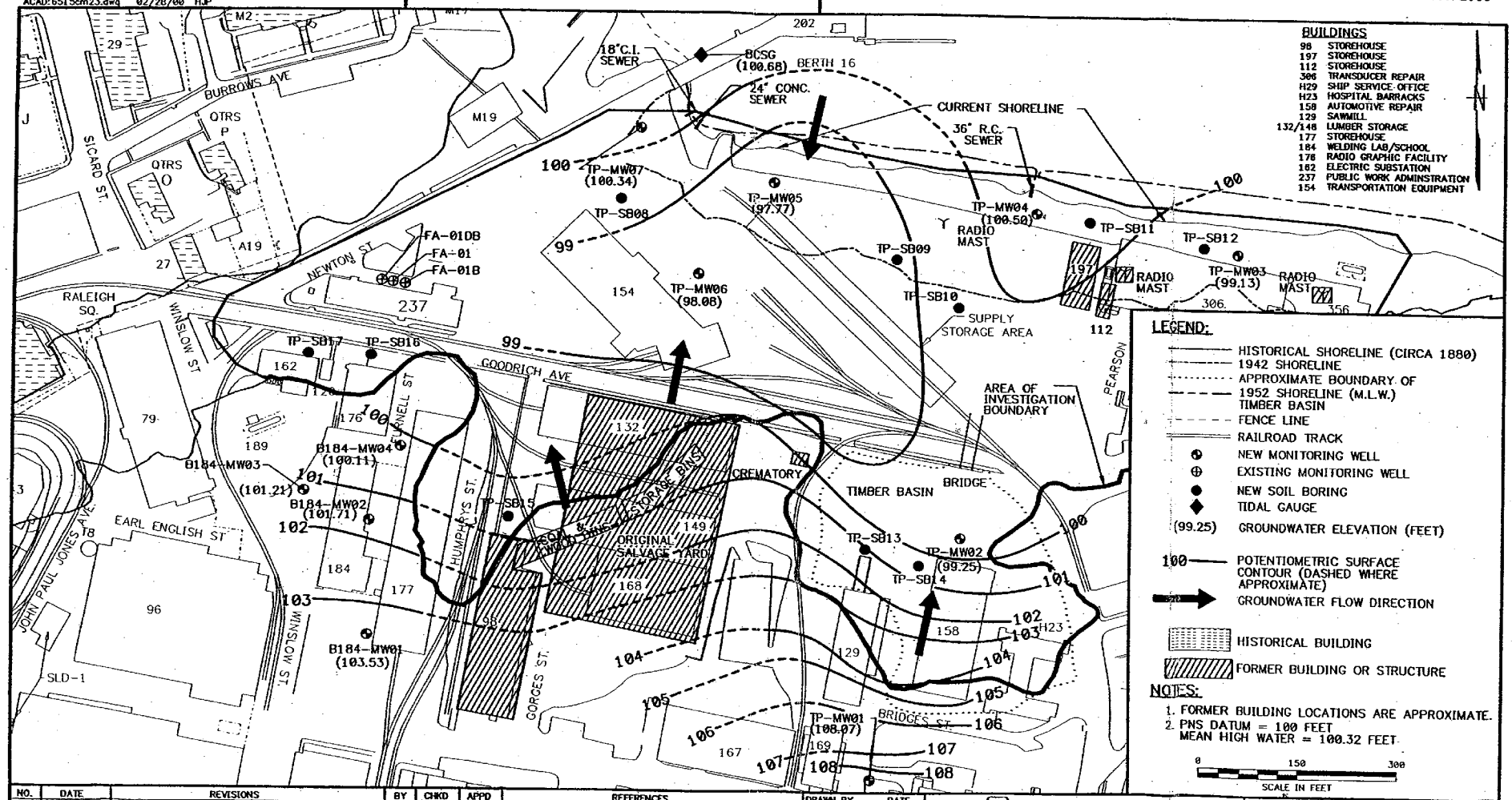

NO.	DATE	REVISIONS	BY	CHKD	APPD	REFERENCES

DRAWN BY DLT DATE 3/18/97
CHECKED BY MLM DATE 3/23/00
COST/SCHED-AREA
SCALE AS NOTED

Tetra Tech NUS, Inc.

POTENTIOMETRIC SURFACE MAP
(HIGH TIDE-JULY 29, 1998)
TOPEKA PIER (SITE 32)
PORTSMOUTH NAVAL SHIPYARD
KITTERY, MAINE

CONTRACT NO. 6515
OWNER NO. 0232
APPROVED BY Mark Mangel DATE 3/23/00
APPROVED BY DATE
DRAWING NO. FIGURE 5-6
REV. 0

FORM CADD NO. SOUTH_BLDGH - REV 0 - 02/11/97

FIGURE 5: SITE 30 GROUNDWATER EVALUATION
(Figure 5-6 from the Site Screening Report, TINUS, May 2000)

P:\GIS\PORTSMOUTH_NSY\MAPDOCS\MXD\SITE30_LOWTIDE_MAY2003.MXD 03/22/10 JEE

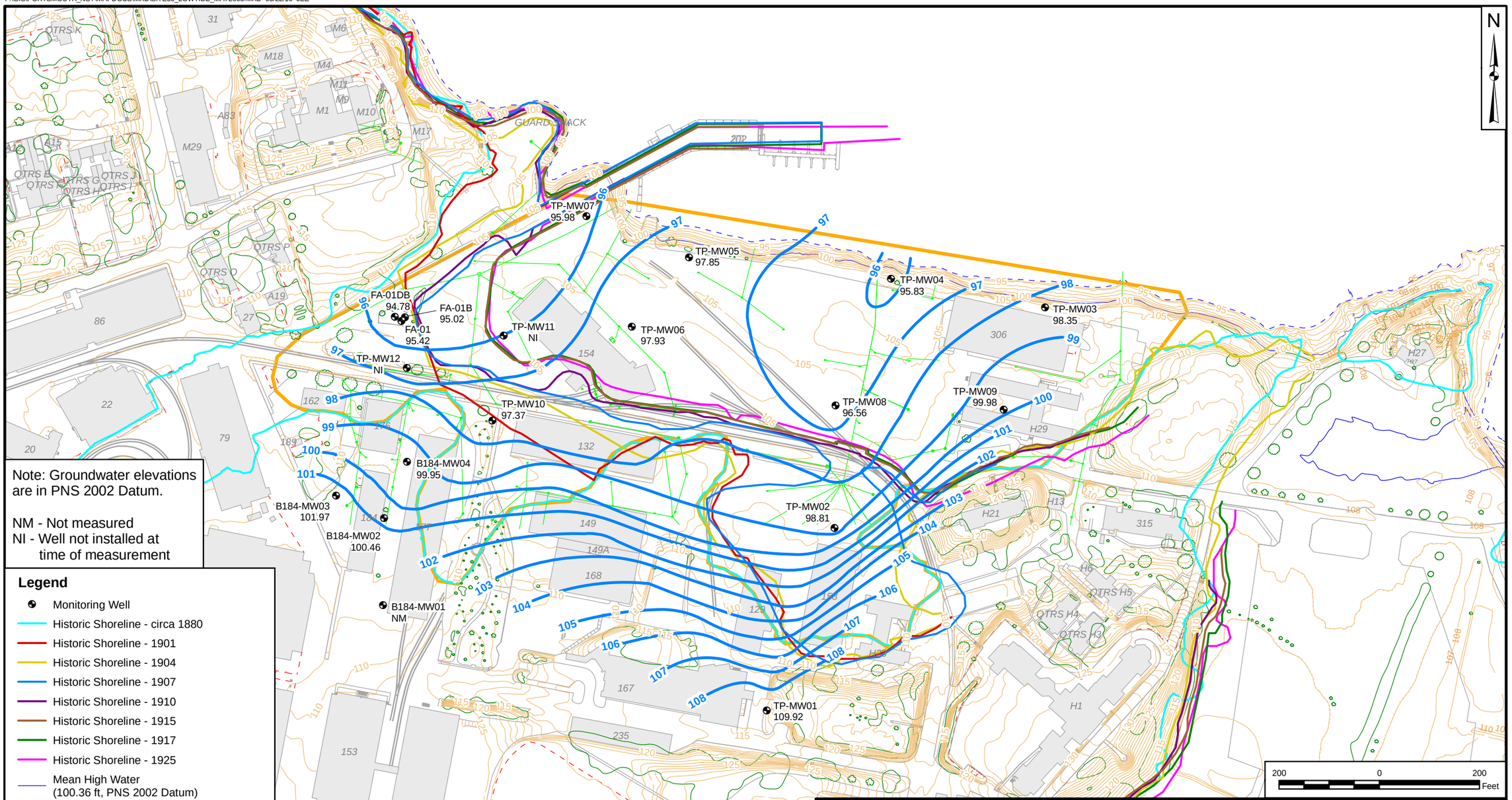

Note: Groundwater elevations are in PNS 2002 Datum.

NM - Not measured
NI - Well not installed at time of measurement

Legend

- Monitoring Well
- Historic Shoreline - circa 1880
- Historic Shoreline - 1901
- Historic Shoreline - 1904
- Historic Shoreline - 1907
- Historic Shoreline - 1910
- Historic Shoreline - 1915
- Historic Shoreline - 1917
- Historic Shoreline - 1925
- Mean High Water (100.36 ft, PNS 2002 Datum)
- Mean Low Tide (92.23 ft, PNS 2002 Datum)
- Potentiometric Contour (feet) - Dashed Where Inferred
- Topographic Contour (ft, PNS 2002 Datum)
- Existing Storm Sewer

Source of Base Mapping: Aerial Survey and Photo, Inc., Norridgewock, Maine
Date of photography: July 27, 2001.
Vertical Datum: Portsmouth Naval Shipyard 2002 Datum.

DRAWN BY J. ENGLISH	DATE 01/21/10	Tetra Tech NUS, Inc.	CONTRACT NUMBER 0383	OWNER NUMBER 0055
CHECKED BY M. GRAY	DATE 03/22/10	GROUNDWATER POTENTIOMETRIC SURFACE MAP LOW TIDE - MAY 2003 SITES 30 AND 32 PORTSMOUTH NAVAL SHIPYARD KITTERY, MAINE	APPROVED BY —	DATE —
COST/SCHEDULE-AREA			APPROVED BY —	DATE —
SCALE AS NOTED			DRAWING NO. FIGURE 6	REV 0

P:\GIS\PORTSMOUTH_NSY\MAPDOCS\MXD\SITE30_HIGHTIDE_MAY2003.MXD 03/22/10 JEE

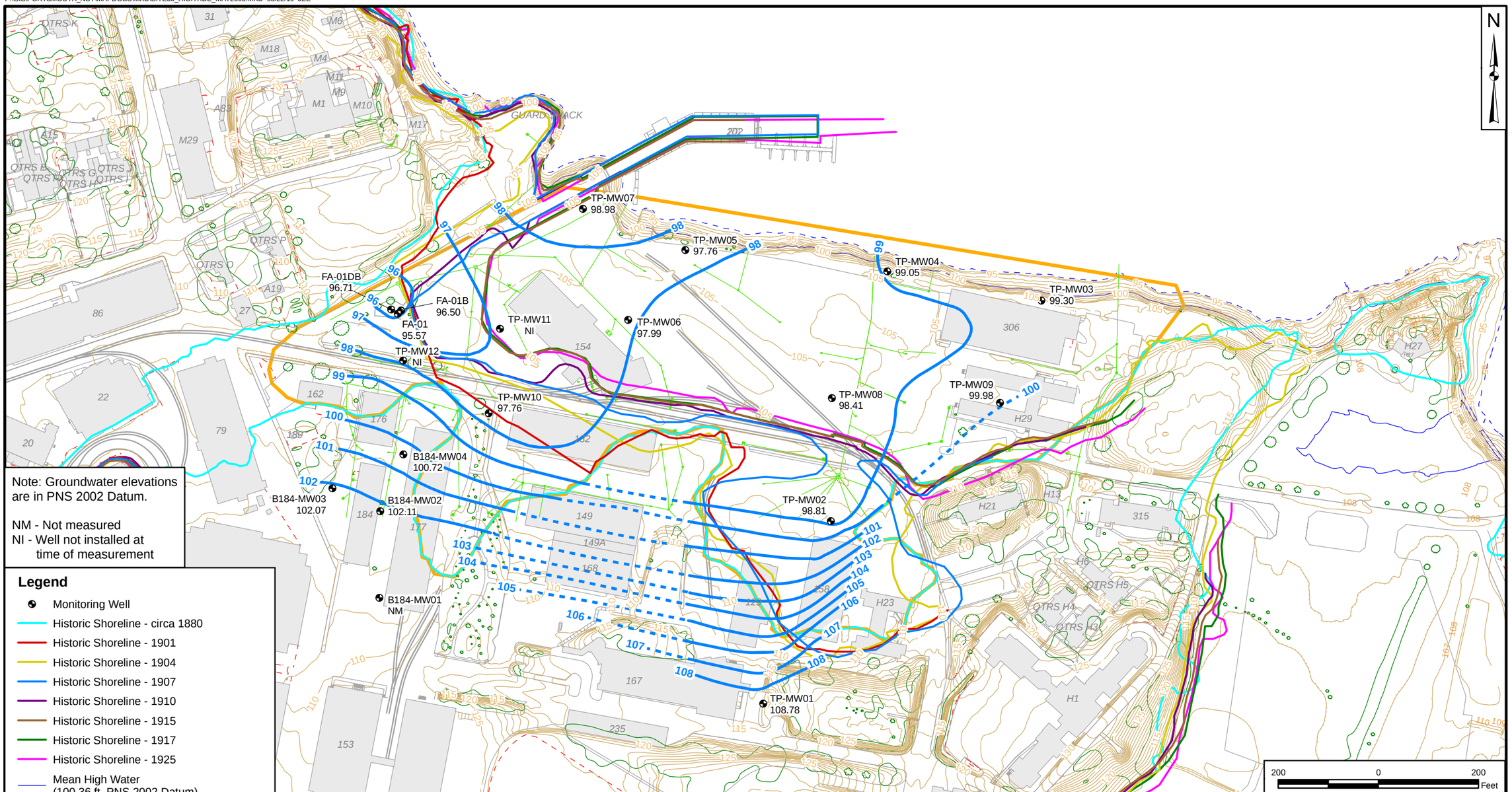

Note: Groundwater elevations are in PNS 2002 Datum.

NM - Not measured
NI - Well not installed at time of measurement

Legend

- Monitoring Well
- Historic Shoreline - circa 1880
- Historic Shoreline - 1901
- Historic Shoreline - 1904
- Historic Shoreline - 1907
- Historic Shoreline - 1910
- Historic Shoreline - 1915
- Historic Shoreline - 1917
- Historic Shoreline - 1925
- Mean High Water (100.36 ft, PNS 2002 Datum)
- Mean Low Tide (92.23 ft, PNS 2002 Datum)
- Potentiometric Contour (feet) - Dashed Where Inferred
- Topographic Contour (ft, PNS 2002 Datum)
- Existing Storm Sewer

Source of Base Mapping: Aerial Survey and Photo, Inc., Norridgewock, Maine
Date of photography: July 27, 2001.
Vertical Datum: Portsmouth Naval Shipyard 2002 Datum.

DRAWN BY J. ENGLISH	DATE 01/21/10	Tetra Tech NUS, Inc.	CONTRACT NUMBER 0383 / OWNER NUMBER 0055
CHECKED BY M. GRAY	DATE 03/22/10	GROUNDWATER POTENTIOMETRIC SURFACE MAP HIGH TIDE - MAY 2003 SITES 30 AND 32 PORTSMOUTH NAVAL SHIPYARD KITTERY, MAINE	APPROVED BY — / DATE —
COST/SCHEDULE-AREA			APPROVED BY — / DATE —
SCALE AS NOTED			DRAWING NO. FIGURE 7 / REV 0

P:\GIS\PORTSMOUTH_NSY\MAPDOCS\MXDS\TE30_LOWTIDE_REV.MXD 7/28/08 KM

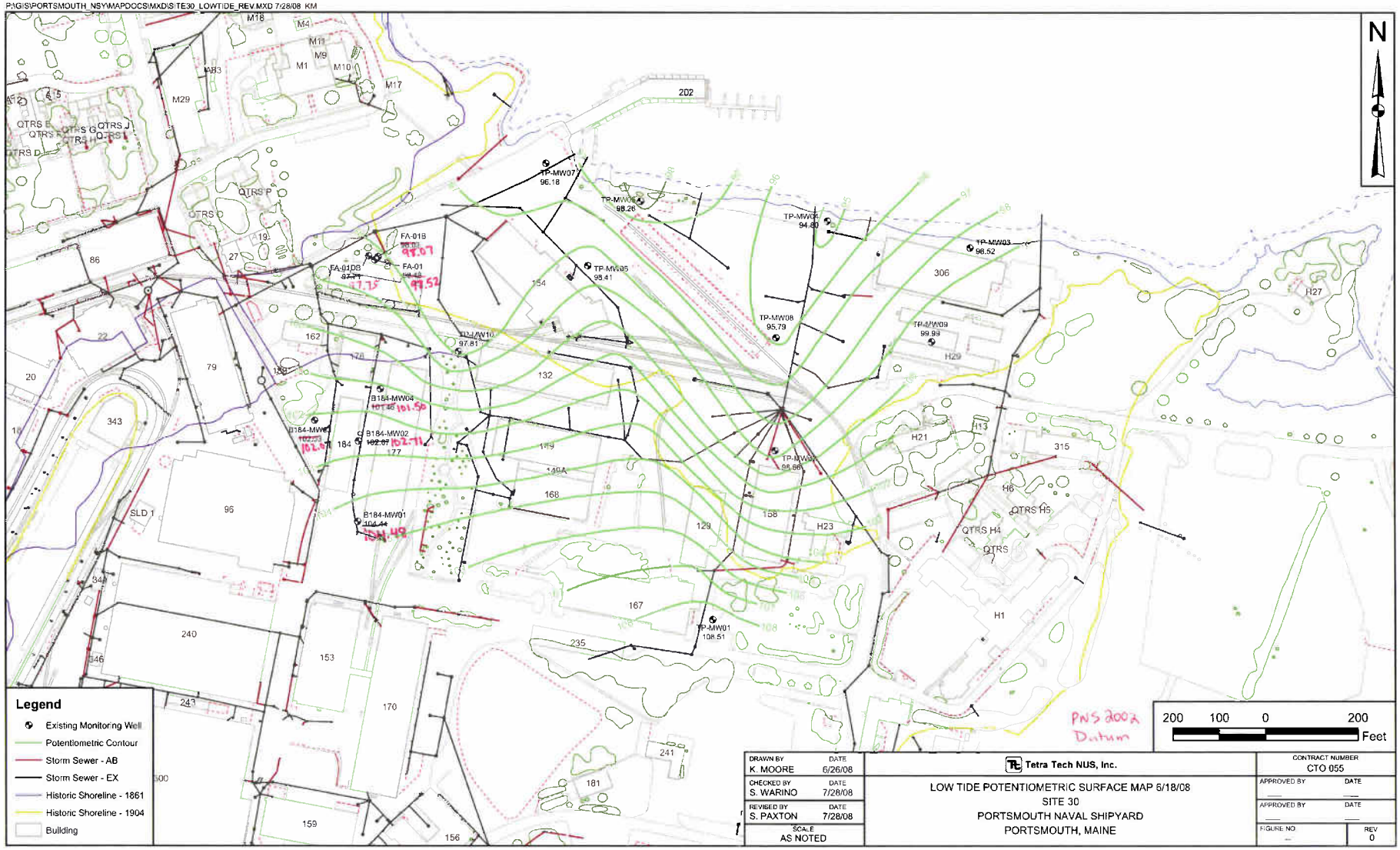

FIGURE 8: SITE 30 GROUNDWATER EVALUATION
(Figure from Appendix I of the Site 32 Remedial Investigation Quality Assurance Project Plan, Revision 1, TtNUS, November 2008. Hand-marked changes made to convert all water level elevations to PNS 2002 datum)

P:\GIS\PORTSMOUTH_NSY\MAPDOCS\MXD\SITE30_HIGHTIDE_REV.MXD 7/28/08 KM

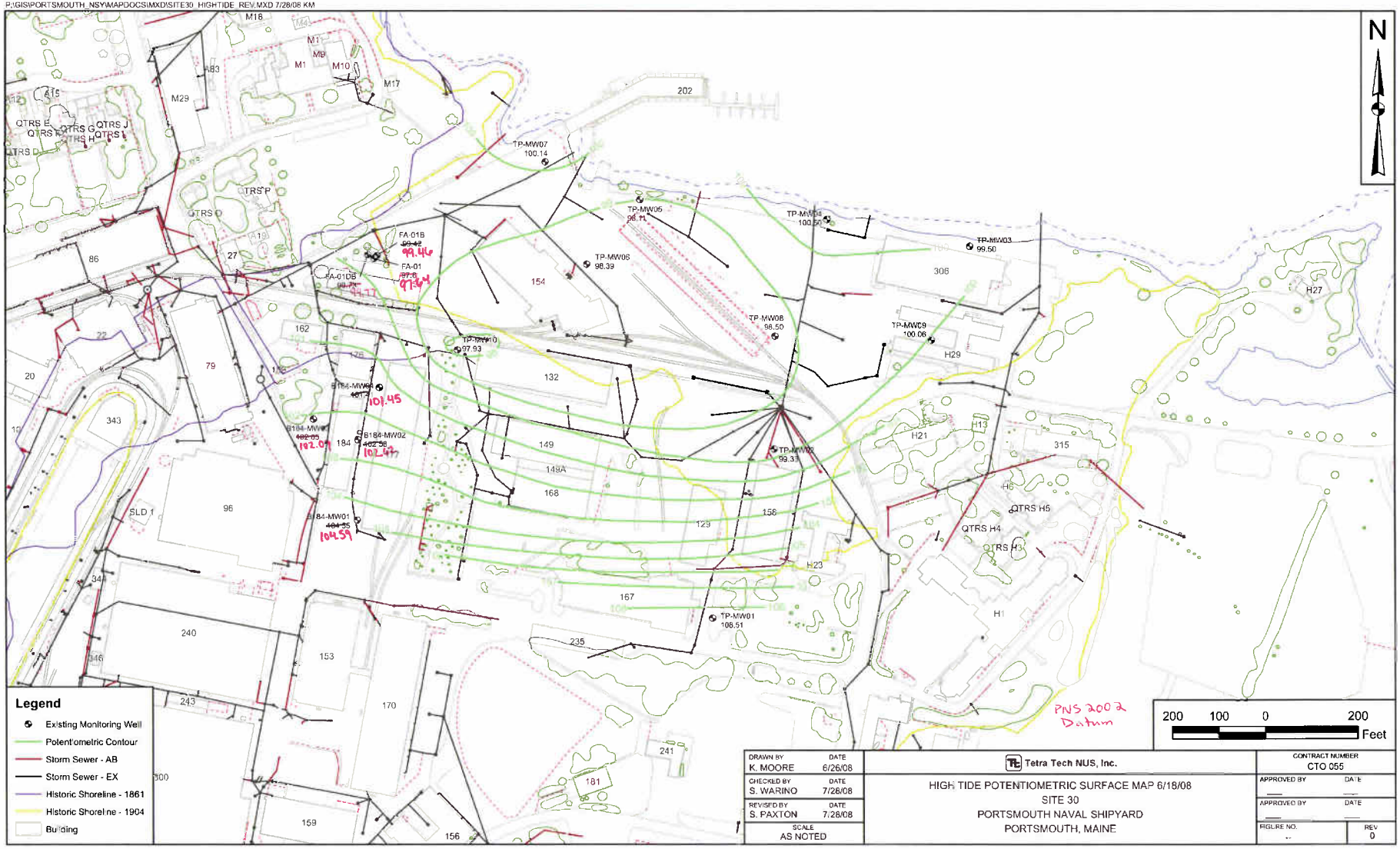

FIGURE 9: SITE 30 GROUNDWATER EVALUATION
(Figure from Appendix I of the Site 32 Remedial Investigation Quality Assurance Project Plan, Revision 1, TtNUS November 2008. Hand-marked changes made to convert all water level elevations to PNS 2002 datum)

P:\GIS\PORTSMOUTH_NSY\APR\SITE32.APR SITE 32 20081215 LOW TIDE ELEVATION LAYOUT 03/22/10 JEE

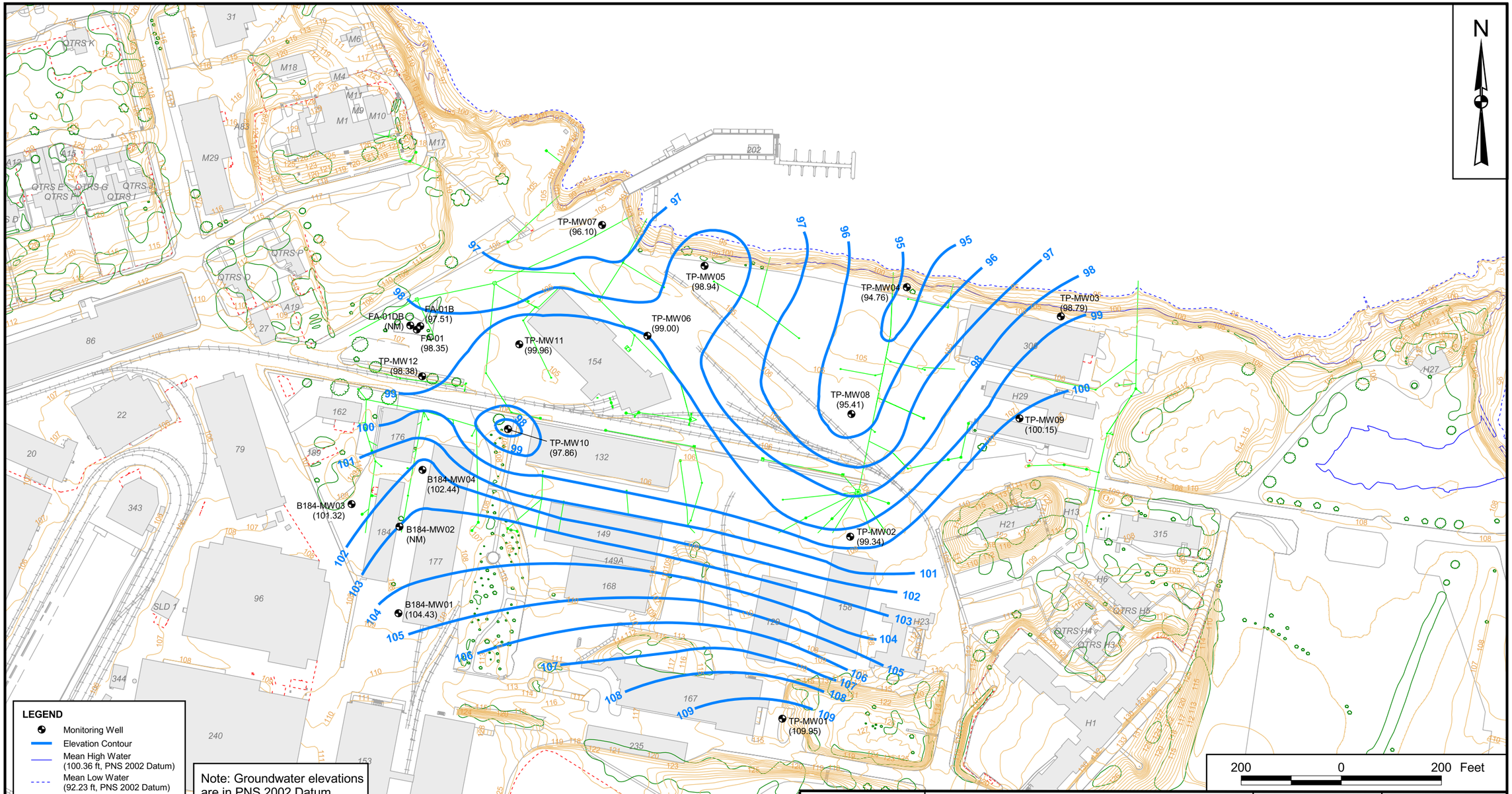

LEGEND

- Monitoring Well
- Elevation Contour
- Mean High Water (100.36 ft, PNS 2002 Datum)
- Mean Low Water (92.23 ft, PNS 2002 Datum)
- Topographic Contour
- Storm Sewer Line

Note: Groundwater elevations are in PNS 2002 Datum.

NM: Not Measured.

Source of Base Mapping: Aerial Survey and Photo, Inc., Norridgewock, Maine
Date of photography: July 27, 2001.
Vertical Datum: Portsmouth Naval Shipyard 2002 Datum.

DRAWN BY J. ENGLISH	DATE 02/11/09	Tetra Tech NUS, Inc.	CONTRACT NUMBER 0383 / OWNER NUMBER CTO 055
CHECKED BY M. GRAY	DATE 03/22/10	LOW TIDE WATER ELEVATION MAP (DECEMBER 15, 2008) SITES 30 AND 32 PORTSMOUTH NAVAL SHIPYARD KITTERY, MAINE	APPROVED BY — DATE —
COST/SCHEDULE-AREA			APPROVED BY — DATE —
SCALE AS NOTED			DRAWING NO. FIGURE 10 / REV 0

P:\GIS\PORTSMOUTH_NSY\APR\SITE32.APR SITE 32 20081215 HIGH TIDE ELEVATION LAYOUT 03/22/10 JEE

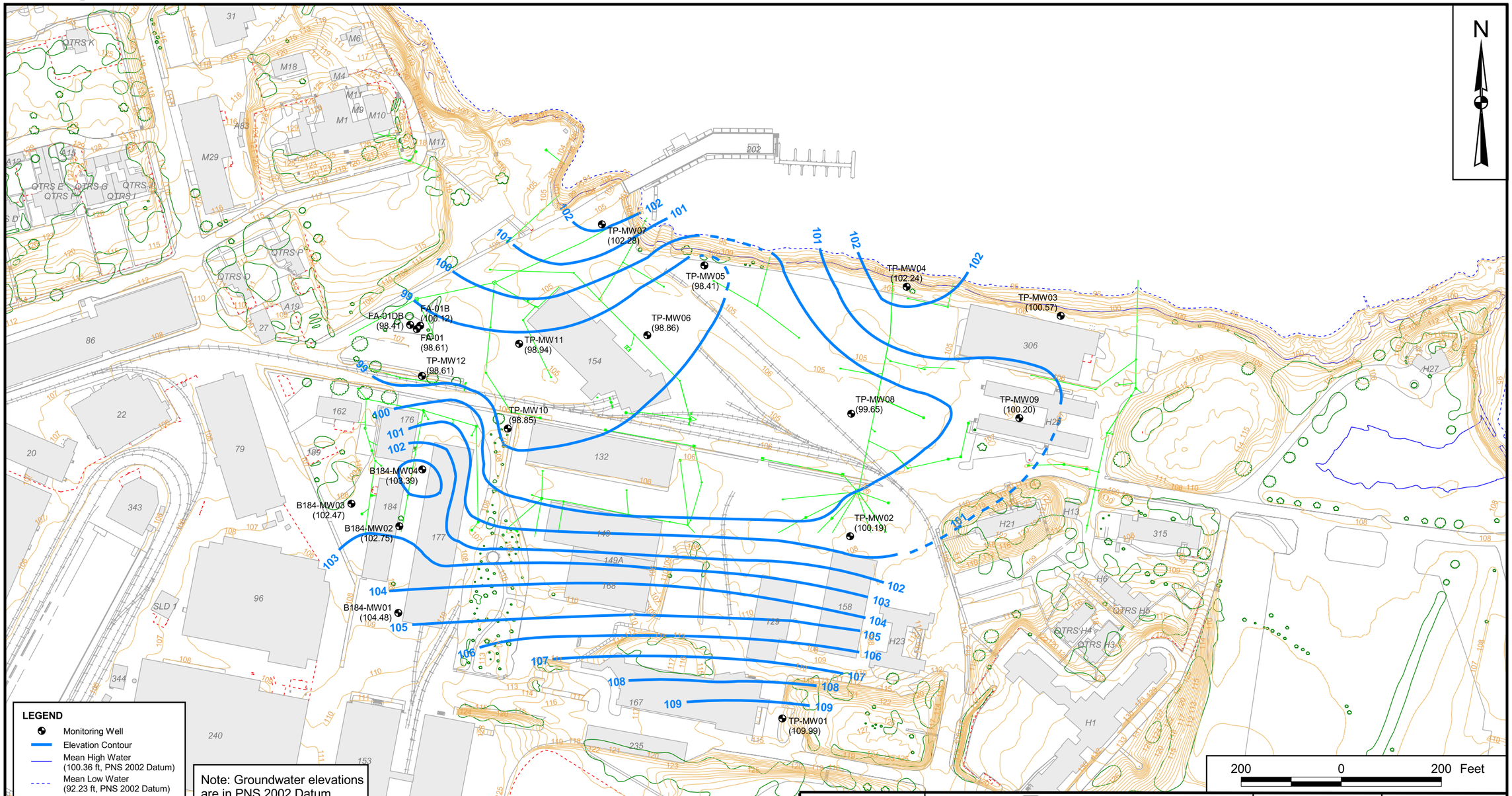

LEGEND

- Monitoring Well
- Elevation Contour
- Mean High Water (100.36 ft, PNS 2002 Datum)
- Mean Low Water (92.23 ft, PNS 2002 Datum)
- Topographic Contour
- Storm Sewer Line

Note: Groundwater elevations are in PNS 2002 Datum.

NM: Not Measured.

Source of Base Mapping: Aerial Survey and Photo, Inc., Norridgewock, Maine
Date of photography: July 27, 2001.
Vertical Datum: Portsmouth Naval Shipyard 2002 Datum.

DRAWN BY J. ENGLISH	DATE 02/11/09	Tetra Tech NUS, Inc.	CONTRACT NUMBER 0383 / OWNER NUMBER CTO 055
CHECKED BY M. GRAY	DATE 03/22/10	HIGH TIDE WATER ELEVATION MAP (DECEMBER 15, 2008) SITES 30 AND32 PORTSMOUTH NAVAL SHIPYARD KITTERY, MAINE	APPROVED BY — DATE —
COST/SCHEDULE-AREA			APPROVED BY — DATE —
SCALE AS NOTED			DRAWING NO. FIGURE 11 / REV 0

P:\GIS\PORTSMOUTH_NSY\APR\SITE32.APR SITE 32 20081216 LOW TIDE ELEVATION LAYOUT 03/22/10 JEE

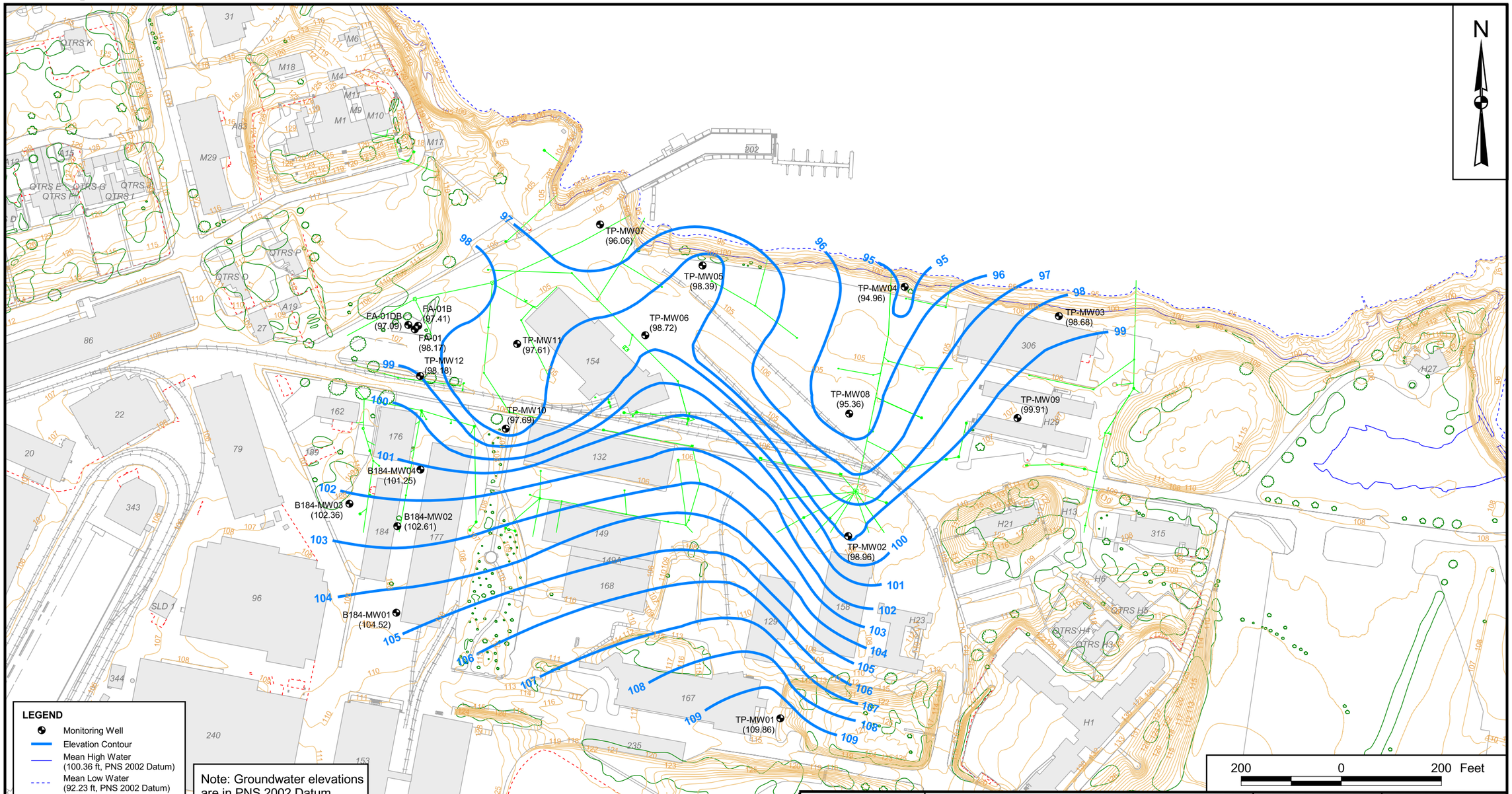

LEGEND

- Monitoring Well
- Elevation Contour
- Mean High Water (100.36 ft, PNS 2002 Datum)
- Mean Low Water (92.23 ft, PNS 2002 Datum)
- Topographic Contour
- Storm Sewer Line

Note: Groundwater elevations are in PNS 2002 Datum.

NM: Not Measured.

Source of Base Mapping: Aerial Survey and Photo, Inc., Norridgewock, Maine
Date of photography: July 27, 2001.
Vertical Datum: Portsmouth Naval Shipyard 2002 Datum.

DRAWN BY J. ENGLISH	DATE 02/11/09	Tetra Tech NUS, Inc.	CONTRACT NUMBER 0383 / OWNER NUMBER CTO 055
CHECKED BY M. GRAY	DATE 03/22/10	LOW TIDE WATER ELEVATION MAP (DECEMBER 16, 2008) SITES 30 AND 32 PORTSMOUTH NAVAL SHIPYARD KITTERY, MAINE	APPROVED BY — DATE —
COST/SCHEDULE-AREA			APPROVED BY — DATE —
SCALE AS NOTED			DRAWING NO. FIGURE 12 / REV 0

P:\GIS\PORTSMOUTH_NSY\APR\SITE32.APR SITE 32 20081216 HIGH TIDE ELEVATION LAYOUT 03/22/10 JEE

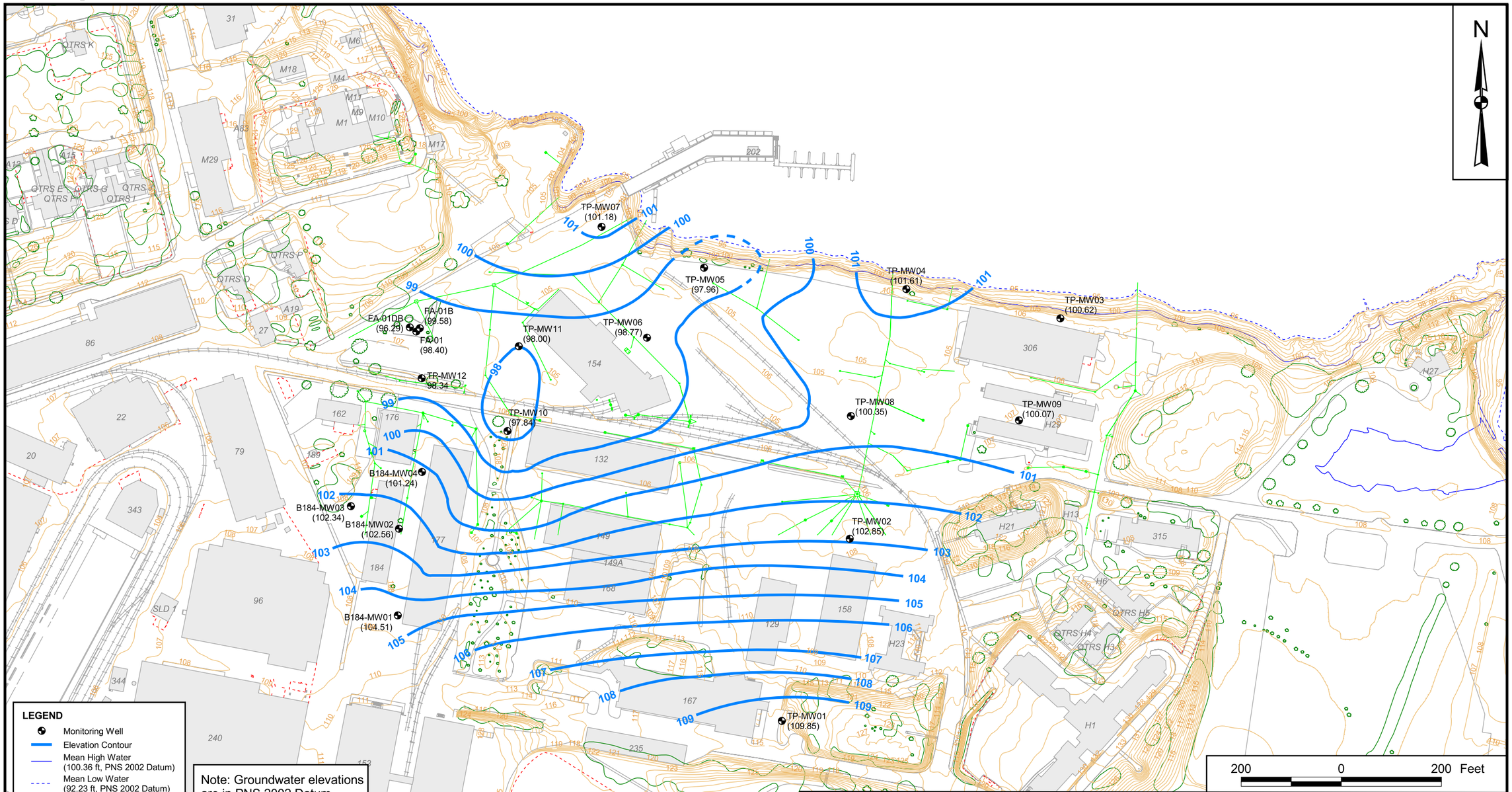

LEGEND

- Monitoring Well
- Elevation Contour
- Mean High Water (100.36 ft, PNS 2002 Datum)
- Mean Low Water (92.23 ft, PNS 2002 Datum)
- Topographic Contour
- Storm Sewer Line

Note: Groundwater elevations are in PNS 2002 Datum.

NM: Not Measured.

Source of Base Mapping: Aerial Survey and Photo, Inc., Norridgewock, Maine
Date of photography: July 27, 2001.
Vertical Datum: Portsmouth Naval Shipyard 2002 Datum.

DRAWN BY J. ENGLISH	DATE 02/11/09	Tetra Tech NUS, Inc.	CONTRACT NUMBER 0383 / OWNER NUMBER CTO 055
CHECKED BY M. GRAY	DATE 03/22/10	HIGH TIDE WATER ELEVATION MAP (DECEMBER 16, 2008) SITES 30 AND 32 PORTSMOUTH NAVAL SHIPYARD KITTERY, MAINE	APPROVED BY — DATE —
COST/SCHEDULE-AREA			APPROVED BY — DATE —
SCALE AS NOTED			DRAWING NO. FIGURE 13 / REV 0

APPENDIX C

QUANTITY CALCULATIONS AND ASSUMPTIONS FOR COSTING INPUT

CLIENT: PORTSMOUTH NAVAL SHIPYARD		JOB NUMBER: 112G00383.0000.0950	
SUBJECT: SITE 30 EE/CA			
BASED ON:		DRAWING NUMBER:	
BY: TJR Date: 3-2010	CHECKED BY: Date: 3/23/10	APPROVED BY:	DATE:

Calculation and Assumptions

Alternative 2: Removal of Tank Vault

Assumptions: Access to inside building is available through the existing doors to allow small to medium size equipment to enter. All building equipment has been removed by others. Water and electricity are available in the building at no charge.

Schedule of activities:
1: Remove office over tank
2: Install well point & pump out vault liquids
3: Remove building floor over tank
4: Remove soils in tank
5: Remove vault acid bricks
6: Clean vault wall along building outside wall. Clean remaining vault walls and floor as needed.
7: Remove "inside" vault walls and floor
8: Backfill vault with gravel/soil
9: Replace building floor

Remove office over vault
2 days with labors & electrician to demo office
assume 10 tons of demo debris for disposal

Install well point & pump out vault liquids
install well point through existing hole in the floor
pump the estimated 10,000 gallons of liquid into 2 tank trailers
dispose as a non-hazardous liquid at a local facility
allow 5 days for pumping
begin building floor demo with saw & hydraulic hammer

Remove building floor over tank
continue building floor demo, assume 5 days

floor volume:	36	ft
	48	ft
	0.5	ft thick
	864	cf or
	65	tons @ 150 lb/cf

floor to be disposed as a hazardous material

Remove soils in tank
use small backhoe to excavate, place into loader bucket to move to dump trailers

vault volume:	36	ft
	48	ft
	4	ft deep
	6,912	cf or
	256	cy or
	432	tons @ 125 lb/cf

assume 5 days to excavate & haul and dispose as a hazardous material

CLIENT: PORTSMOUTH NAVAL SHIPYARD		JOB NUMBER: 112G00383.0000.0950	
SUBJECT: SITE 30 EE/CA			
BASED ON:		DRAWING NUMBER:	
BY: TJR Date: 3-2010	CHECKED BY: [illegible] Date: 3/23/10	APPROVED BY:	DATE:

Remove vault acid bricks
using backhoe with hydraulic hammer, jack hammer and laborers with Level "C" protection, allow 5 days to remove bricks
brick volume:

two walls:	48 ft		
	4 ft tall		
	192 sf		
	2 walls		
	384 sf	384 sf	
two walls:	36 ft		
	4 ft tall		
	144 sf		
	2 walls		
	288 sf	288 sf	
floor	36 ft		
	48 ft		
	1,728 sf	1,728 sf	
		2,400 sf	
assume thickness of brick		0.5 ft	
		1,200 cf or	
		84 ton @ 140 lb/cf	

brick to be disposed as a hazardous material

Clean vault walls and floor
clean walls and floor with presser washer using laborer with Level "C" protection
wipe & chip sample "outside" concrete wall
assume estimated of 200 gallons of liquid is pump into drums
dispose as a non-hazardous liquid at a local facility
allow 5 days for clean & sample wall

Remove "inside" vault walls and vault floor
saw cut concrete from building foundation & backhoe with hydraulic hammer, jack hammer and laborers, allow 20 days to remove concrete (outside wall to remain)
concrete volume:

two walls:	48 ft		
	4 ft tall		
	192 sf		
	2 walls		
	384 sf	384 sf	
one wall:	36 ft		
	4 ft tall		
	144 sf	144 sf	
		528 sf	
		1 ft thick =	528 cf

CLIENT: PORTSMOUTH NAVAL SHIPYARD		JOB NUMBER: 112G00383.0000.0950
SUBJECT: SITE 30 EE/CA		
BASED ON:		DRAWING NUMBER:
BY: TJR Date: 3-2010	CHECKED BY: TWS Date: 3/23/10	APPROVED BY: DATE:

floor 36 ft
48 ft
1,728 sf

1,728 sf
0.67 ft thick = 1,152 cf
1,680 cf

1,680 cf or
126 ton @ 150 lb/cf

assume concrete disposed as a non-hazardous material
sample soil behind & under removed concrete

Backfill vault with gravel/soil
backfill volume:

soil removed from tank	256 cy
brick removed	44 cy
concrete removed	62 cy
	363 cy

backfill and compact soil, assume 5 days

Replace building floor
place 6" thick concrete slab over former vault. Assume size of slab 40' by 52'.

40 ft
52 ft
2,080 sf

Disposal Totals

Liquids:
10,000 gallons of vault liquid into 2 tankers (non-hazardous)
200 gallons of wall cleaning liquids into 4 drums (non-hazardous)

Solids:
65 tons of concrete floor (hazardous)
432 tons of vault soils (hazardous)
84 tons of vault acid bricks (hazardous)
126 tons of concrete vault walls & floor (non-hazardous)

CLIENT: PORTSMOUTH NAVAL SHIPYARD		JOB NUMBER: 112G00383.0000.0950	
SUBJECT: SITE 30 EE/CA			
BASED ON:		DRAWING NUMBER:	
BY: TJR Date: 3-2010	CHECKED BY: TJR Date: 3/23/10	APPROVED BY:	DATE:

Time to complete site work

	days
mob	5
site preparation & office removal	7
pump vault liquids	5
floor removal	5
excavation vault soils	5
brick removal	5
clean vault concrete	5
removal of vault walls & floor	20
backfill former vault	5
replace floor	5
demob	5
	72 days
	3 months

APPENDIX D

COST ESTIMATES

PORTSMOUTH NAVAL SHIPYARD
Kittery, Maine
Site 30 EE/CA
Alternative 2: Removal of Tank Vault
Capital Cost

3/23/2010 1:45 PM

Item	Quantity	Unit	Unit Cost Subcontract	Unit Cost Material	Unit Cost Labor	Unit Cost Equipment	Extended Cost Subcontract	Extended Cost Material	Extended Cost Labor	Extended Cost Equipment	Subtotal
1 PROJECT PLANNING & DOCUMENTS											
1.1 Prepare Work Plans & Permits	250	hr			$37.00		$0	$0	$9,250	$0	$9,250
1.2 Construction Completion Report	100	hr			$37.00		$0	$0	$3,700	$0	$3,700
2 MOBILIZATION AND DEMOBILIZATION											
2.1 Site Support Facilities (trailers, phone, electric, etc.)	1	ls		$1,200.00		$3,600.00	$0	$1,200	$0	$3,600	$4,800
2.2 Equipment Mobilization/Demobilization	7	ea			$177.00	$610.00	$0	$0	$1,239	$4,270	$5,509
3 FIELD SUPPORT											
3.1 Office Trailer	3	mo				$360.00	$0	$0	$0	$1,080	$1,080
3.2 Field Office Equipment, Utilities, & Support	3	mo		$470.00			$0	$1,410	$0	$0	$1,410
3.3 Storage Trailer	3	mo				$92.50	$0	$0	$0	$278	$278
3.4 Utility Connection/Disconnection (phone/electric)	1	ls	$1,250.00				$1,250	$0	$0	$0	$1,250
3.5 Site Superintendent	72	day		$152.00	$384.64		$0	$10,944	$27,694	$0	$38,638
3.6 Site Health & Safety and QA/QC	72	day		$152.00	$307.68		$0	$10,944	$22,153	$0	$33,097
4 DECONTAMINATION											
4.1 Decontamination Services	3	mo		$1,220.00	$2,245.00	$1,550.00	$0	$3,660	$6,735	$4,650	$15,045
4.2 Temporary Equipment Decon Pad	1	ls		$1,500.00	$2,000.00	$300.00	$0	$1,500	$2,000	$300	$3,800
4.3 Decon Water	3,000	gal		$0.20			$0	$600	$0	$0	$600
4.4 Decon Water Storage Tank, 6,000 gallon	3	mo				$771.00	$0	$0	$0	$2,313	$2,313
4.5 Clean Water Storage Tank, 4,000 gallon	3	mo				$693.00	$0	$0	$0	$2,079	$2,079
4.6 Disposal of Decon Waste (liquid & solid)	3	mo	$985.00				$2,955	$0	$0	$0	$2,955
5 SITE PREPARATION (Office Removal)											
5.1 Skid Steer	2	day			$330.40	$291.00	$0	$0	$661	$582	$1,243
5.2 Site Labor, (3 laborers)	6	day			$264.80		$0	$0	$1,589	$0	$1,589
5.3 Electrician	1	day			$392.00		$0	$0	$392	$0	$392
5.4 Roll-off Box	2	day				$10.00	$0	$0	$0	$20	$20
5.5 Debris Disposal	10	ton	$45.00				$450	$0	$0	$0	$450
6 VAULT LIQUID REMOVAL											
6.1 Skid Steer	5	day			$330.40	$291.00	$0	$0	$1,652	$1,455	$3,107
6.2 Well Point	1	ea		$160.00	$230.00	$0.00	$0	$160	$230	$0	$390
6.3 Site Labor, (3 laborers)	15	day			$264.80		$0	$0	$3,972	$0	$3,972
6.4 Pump, diaphragm w/hoses	5	day				$70.85	$0	$0	$0	$354	$354
6.5 Tanker Demurrage, 5,000 gal	5	day				$235.00	$0	$0	$0	$1,175	$1,175
6.6 Disposal of Liquids	10,000	gal	$0.15				$1,500	$0	$0	$0	$1,500
6.7 Transportation of Liquids ($500/5,000 gal)	2	trip	$500.00				$1,000	$0	$0	$0	$1,000
6.8 Offsite Disposal Testing	1	ea	$775.00	$25.00	$50.00	$20.00	$775	$25	$50	$20	$870
7 FLOOR REMOVAL OVER VAULT											
7.1 Backhoe/Loader	5	day			$343.60	$337.80	$0	$0	$1,718	$1,689	$3,407
7.2 Hydraulic Hammer for Backhoe	5	day				$78.60	$0	$0	$0	$393	$393
7.3 Skid Steer	5	day			$330.40	$291.00	$0	$0	$1,652	$1,455	$3,107
7.4 Jackhammer, Air Compressor, Hoses	5	day				$166.00	$0	$0	$0	$830	$830
7.5 Saw Concrete	5	day	$1,431.85				$7,159	$0	$0	$0	$7,159
7.6 Site Labor, (3 laborers)	15	day			$264.80		$0	$0	$3,972	$0	$3,972
7.7 Roll-off Boxes, 3 each	9	day				$10.00	$0	$0	$0	$90	$90
7.8 Transportation & Disposal of Hazardous Materials	65	ton	$265.00				$17,225	$0	$0	$0	$17,225
7.9 Offsite Disposal Testing	1	ea	$775.00	$25.00	$50.00	$20.00	$775	$25	$50	$20	$870
8 EXCAVATION OF VAULT (soil)											
8.1 Backhoe/Loader	5	day			$343.60	$337.80	$0	$0	$1,718	$1,689	$3,407
8.2 Skid Steer	5	day			$330.40	$291.00	$0	$0	$1,652	$1,455	$3,107
8.3 Site Labor, (3 laborers)	15	day			$264.80		$0	$0	$3,972	$0	$3,972
8.4 Transportation & Disposal of Hazardous Materials	432	ton	$265.00				$114,480	$0	$0	$0	$114,480
8.5 Offsite Disposal Testing	1	ea	$775.00	$25.00	$50.00	$20.00	$775	$25	$50	$20	$870

PORTSMOUTH NAVAL SHIPYARD
Kittery, Maine
Site 30 EE/CA
Alternative 2: Removal of Tank Vault
Capital Cost

3/23/2010 1:45 PM

Item	Quantity	Unit	Unit Cost Subcontract	Unit Cost Material	Unit Cost Labor	Unit Cost Equipment	Extended Cost Subcontract	Extended Cost Material	Extended Cost Labor	Extended Cost Equipment	Subtotal
9 ACID BRICK REMOVAL											
9.1 Backhoe/Loader	5	day			$343.60	$337.80	$0	$0	$1,718	$1,689	$3,407
9.2 Hydraulic Hammer for Backhoe	5	day				$78.60	$0	$0	$0	$393	$393
9.3 Skid Steer	5	day			$330.40	$291.00	$0	$0	$1,652	$1,455	$3,107
9.4 Jackhammer, Air Compressor, Hoses	5	day				$166.00	$0	$0	$0	$830	$830
9.5 Concrete Saw	5	day				$73.80	$0	$0	$0	$369	$369
9.6 Site Labor, (3 laborers), "Level C"	15	day			$264.80		$0	$0	$3,972	$0	$3,972
9.7 Roll-off Boxes, 4 each	20	day				$10.00	$0	$0	$0	$200	$200
9.8 Transportation & Disposal of Hazardous Materials	84	ton	$265.00				$22,260	$0	$0	$0	$22,260
9.9 Offsite Disposal Testing	1	ea	$775.00	$25.00	$50.00	$20.00	$775	$25	$50	$20	$870
10 CLEAN VAULT WALLS & FLOOR											
10.1 Pressure Washer	5	day				$60.80	$0	$0	$0	$304	$304
10.2 Pump, diaphragm w/hoses	5	day				$70.85	$0	$0	$0	$354	$354
10.3 Site Labor, (3 laborers), "Level C"	15	day			$264.80		$0	$0	$3,972	$0	$3,972
10.4 Skid Steer	5	day			$330.40	$291.00	$0	$0	$1,652	$1,455	$3,107
10.5 Drums	4	ea		$55.00			$0	$220	$0	$0	$220
10.6 Transportation of Liquids	1	trip	$500.00				$500	$0	$0	$0	$500
10.7 Disposal of Liquids	200	gal	$0.15				$30	$0	$0	$0	$30
10.8 Offsite Disposal Testing	1	ea	$775.00	$25.00	$50.00	$20.00	$775	$25	$50	$20	$870
10.9 Verification Samples, outside wall	3	ea	$775.00	$25.00	$50.00	$20.00	$2,325	$75	$150	$60	$2,610
11 REMOVAL OF VAULT											
11.1 Backhoe/Loader	20	day			$343.60	$337.80	$0	$0	$6,872	$6,756	$13,628
11.2 Hydraulic Hammer for Backhoe	20	day				$78.60	$0	$0	$0	$1,572	$1,572
11.3 Skid Steer	20	day			$330.40	$291.00	$0	$0	$6,608	$5,820	$12,428
11.4 Jackhammer, Air Compressor, Hoses	20	day				$166.00	$0	$0	$0	$3,320	$3,320
11.5 Saw Concrete	20	day	$1,431.85				$28,637	$0	$0	$0	$28,637
11.6 Site Labor, (3 laborers)	60	day			$264.80		$0	$0	$15,888	$0	$15,888
11.7 Roll-off Boxes, 6 each	60	day				$10.00	$0	$0	$0	$600	$600
11.8 Transportation & Disposal of Non-Hazardous Materials	126	ton	$75.00				$9,450	$0	$0	$0	$9,450
11.9 Offsite Disposal Testing	1	ea	$775.00	$25.00	$50.00	$20.00	$775	$25	$50	$20	$870
12 BACKFILL VAULT											
12.1 Sand/gravel Backfill	363	cy		$27.50			$0	$9,983	$0	$0	$9,983
12.2 Backhoe/Loader	5	day			$343.60	$337.80	$0	$0	$1,718	$1,689	$3,407
12.3 Compactor for Backhoe	5	day				$127.00	$0	$0	$0	$635	$635
12.4 Skid Steer	5	day			$330.40	$291.00	$0	$0	$1,652	$1,455	$3,107
12.0 Site Labor, (3 laborers)	30	day			$264.80		$0	$0	$7,944	$0	$7,944
13 REPLACE BUILDING FLOOR											
13.1 Reinforced Concrete Floor, 6" thick	2,080	sf	$7.26				$15,101	$0	$0	$0	$15,101
Subtotal							$228,972	$40,846	$150,049	$58,833	$478,699
Overhead on Labor Cost @ 30%									$45,015		$45,015
G & A on Cost @ 10%							$22,897	$4,085	$15,005	$5,883	$47,870
Tax on Materials and Equipment Cost @ 5%								$2,042		$2,942	$4,984
Total Direct Cost							$251,869	$46,972	$210,068	$67,658	$576,568
Indirects on Total Direct Cost @ 25%			(excluding transportation and disposal cost)								$101,679
Profit on Total Direct Cost @ 10%											$57,657
Subtotal											$735,904
Health & Safety Monitoring @ 3%											$22,077

PORTSMOUTH NAVAL SHIPYARD
Kittery, Maine
Site 30 EE/CA
Alternative 2: Removal of Tank Vault
Capital Cost

3/23/2010 1:45 PM

Item	Quantity	Unit	Unit Cost Subcontract	Unit Cost Material	Unit Cost Labor	Unit Cost Equipment	Extended Cost Subcontract	Extended Cost Material	Extended Cost Labor	Extended Cost Equipment	Subtotal
Total Field Cost											$757,981
Contingency on Total Field Costs @ 25%											$189,495
Engineering on Total Field Cost @ 10%											$75,798
TOTAL CAPITAL COST											**$1,023,274**

APPENDIX E

RESPONSES TO COMMENTS

RESPONSES TO MEDEP COMMENTS DATED APRIL 28, 2010
DRAFT SITE 30 ENGINEERING EVALUATION/COST ANALYSIS AND ACTION MEMORANDUM (REVISION 2)
PORTSMOUTH NAVAL SHIPYARD, KITTERY, MAINE

Draft EE/CA and Action Memorandum

1. **Comment:** Exec. Summary, p. ES-1: "The final stage of relocation will be complete by March 2010." Please update the status of the relocation here and in other parts of the document. The final document must reflect site conditions at the time of its completion. This comment also applies to the Draft Action Memo.

   Response: Currently there are two individuals that still occupy the office within Building 184. However, the welders have been relocated and no longer occupy the building. The current status of the relocation will be updated in each version of the EE/CA and Action Memo so that the information presented is up-to-date at the time of submission.

2. **Comment:** 2.4.1, p. 2-4: "In 1973, a crystalline substance was noticed…" "In 1994, a crystalline substance was again noticed…" "In 1996, a crystalline substance was again observed…"

   Please clarify if the crystalline substance was ever removed between these observations or if any other action was taken.

   Response: In both occurrences following observation the crystalline material was removed and disposed. In 1973 the material was reportedly scraped from the floor as part of normal housekeeping activities and disposed of with the regular waste stream form the facility. Following characterization of the crystalline material in 1994 the material was reportedly removed and disposed off-site as a hazardous waste. This information will be added to both the EE/CA and Action Memorandum. The revised text for the first paragraph of Section 2.4.1 of the EE/CA and the first paragraph on page II-3 of the Action Memorandum is presented below.

   EE/CA

   "In 1973, a crystalline substance was noticed along the edge of the former tank vault (Dolph and Hall, September 1995). The crystalline material was reportedly removed through normal housekeeping methods following the reported observation. In 1994, a crystalline…"

   "…and chromium. The TCLP analysis detected low concentrations of arsenic, barium, cadmium, chromium, and lead. With the exception of pH, the crystalline material did not exceed TCLP criteria. As a result of the high acidic readings (pH less than 2.0) the crystalline material was classified as a RCRA hazardous waste and was reportedly removed and disposed of as a hazardous waste."

   Action Memorandum

   "…groundwater. Information on the environmental investigations at Site 30 is provided in the Site 30 EE/CA (TtNUS, March 2010). Crystalline material identified in 1973 was reportedly removed during normal housekeeping activities. When crystalline material identified again in

1996, the crystals were reportedly tested, characterized as a RCRA hazardous waste based on pH readings below 2.0, and disposed off-site as hazardous waste."

3. **Comment:** 2.4.3, p. 2-5: "Results from the Test Pitting Investigation were used to make assumptions regarding disposal of materials for cost estimating purposes." Cost estimates in App. D indicate that it was assumed that the fill material would be designated hazardous. The results from the Test Pitting Investigation do not support this assumption. Please clarify.

   Response: The results of the testing indicated that material within the tank vault at one location has a pH that is less than 2. As a result the cost estimated conservatively assumed that the material within the tank vault is hazardous. The cost estimate and the alternative write up indicated that characterization sampling is required to establish the proper disposal methods for material removed from the tank vault. No changes have been made to the text or cost estimate based on this comment.

4. **Comment:** Table 3-1 Please clarify why the Navy has not identified any chemical-specific ARARs for Site 30. The crystalline substance is clearly a hazardous waste by characteristic and therefore falls under Federal and State hazardous waste statutes. This comment also applies to Table 1 of the Draft Action Memo.

   Response: In the chemical-specific ARARs and TBCs table only identifies the regulations as TBCs since the regulations were used as guidelines to establish the presence or absence risk to human or ecological receptors. Because the crystalline material does not become a hazardous waste until it is removed, the Hazardous Wastes statutes do not become an ARAR until the material is excavated. For this reason the Hazardous waste statutes are referred to as ARARs in the action specific table (Table 4-2).

5. **Comment:** Table 3-1 Please update the reference for the State's Guidance Manual for Human Health Risk Assessments to "Revised Guidance for Human Health Risk Assessments for Hazardous Substance Sites in Maine, State of Maine Department of Environmental Protection and Center for Disease Control, July 2009." This comment also applies to Table 1 of the Draft Action Memo.

   Response: The indicated reference update will be made to Table 1 of the Action Memorandum and Table 3-1 of the EE/CA. The revised reference will read as follows.

   "Revised Guidance for Human Health Risk Assessments for Hazardous Substance Sites in Maine, State of Maine Department of Environmental Protection and Center for Disease Control, July 2009."

6. **Comment:** Table 4-1 "LUCs are not required to prohibit exposure to contaminated fill, because of continued use of building in the foreseeable future."

   This text doesn't make sense. If the fill is not removed then LUCs would be required to prevent contact with it. However, in this case, LUCs are not implementable given the Navy wants unrestricted use of the building and therefore they should be eliminated.

   Response: LUCs were included in Table 4-1 because LUCs are typical for remedial activities that leave contamination in place. The LUCs were eliminated because of the Navy's goal to have unrestricted use of the building. The text under the General Screening header will be revised as indicated below.

"LUCs would be required to prohibit exposure to contaminated material if the tank vault were to remain in place. However, achieving the RAO of unrestricted use will eliminate the need to implement LUCs."

7. **Comment:** Table 4-1 "Due to the classification of Building 184 as historically significant, one load bearing wall of the former tank vault cannot be excavated."

   Please clarify the importance of the building's historical status for this technology. Regardless of the its historical classification the load bearing wall cannot be excavated due its necessity for the building's structural integrity.

   Response: The text discussing the historical status of the building will be removed from the identified text because the building historical status has no bearing on the retaining or eliminating scrubbing as a viable technology. The text in Table 4-1 under the General Screening header for the scrubbing technology will be revised as indicated below.

   "Because one of the tank vault walls is a load bearing wall for Building 184 this wall cannot be removed. As a result any residual contamination found on this wall must be washed from the wall."

8. **Comment:** Table 4-2 As the table's footnote indicates, the terms "potential" and "potentially" are used when requirements are invoked for certain remedial actions. Table 4-2 addresses only one specific remedial action, therefore remove these terms from all status designations. The listed requirements either are or are not ARARs/TBCs for excavation/off-site disposal. This comment also applies to Table 3 of the Draft Action Memo.

   Response: The terms "potential" and "potentially" will be removed from the table.

9. **Comment:** Table 4-2 The Maine Hazardous Waste Management Rules are Applicable given that the crystalline substance has been classified as hazardous by characteristic. This comment also applies to Table 3 of the Draft Action Memo.

   Response: As indicated in response to comment number 8 the term "potentially" was removed from the table making the ARAR referred to in this comment Applicable.

10. **Comment:** Table 4-2, p. 5 of 5 "These regulations are applicable for the potential transport of solid waste." Remove the term "potential" since this table specifically addresses off-yard disposal and transport of solid waste is certain. This comment also applies to Table 3 of the Draft Action Memo.

    Response: The term "Potential" and "Potentially" have been removed from the tables identified in the comment.

11. **Comment:** App. B It would be useful to include a brief statement on how wells TP-MW10 and TP-MW12 were located. For instance, MW12 was sited based on potentiometric maps.

    Response: the text in the Introduction will be revised as follows to provide additional information on how TP-MW10 and TP-MW12 were located.

"The evaluation focuses on providing information to support resolution of regulatory concerns raised regarding the understanding of groundwater flow and potential impact from Site 30. The concerns were raised in comments on the SSI Report, Site 30 EE/CA (Revisions 0 and 1), and draft Site 30 Action Memorandum Revision 0. The major concern was that groundwater flow direction for Site 30 had not been adequately characterized to appropriately locate downgradient monitoring wells for evaluation of potential groundwater impacts from Site 30. As part of the development of the data quality objectives (DQOs) for the RI for Site 32 ***(TtNUS, November 2008)***, monitoring wells were located at Site 32 that were downgradient of Site 30 to provide the additional information for assessment of groundwater flow direction. The monitoring wells (TP-MW10 and TP-MW12) were installed as part of the Phase I and Phase II Site 32 RI field activities. ***The locations for wells TP-MW10 and TP-MW-12 were based on groundwater flow and limitations due to utilities. TP-MW10, one of the wells installed in 2003 to improve well density around storm sewers at Site 32, was located northeast of Building 184 to also provide information on groundwater flow and conditions downgradient of Site 30. Based on evaluation of potentiometric surface maps prepared after the Phase I Site 32 RI field activities, monitoring well TP-MW12, installed in 2008, was located north of Building 184 to provide additional information for groundwater flow and potential migration of contaminants from Site 30 to Site 32.*** Water level measurements in Site 30 and Site 32 monitoring wells were collected as part of the Site 32 RI field activities. In addition, as part of the Phase II Site 32 RI field work, groundwater samples for inorganic analysis were collected at Site 30 monitoring wells to provide additional chemical data for Site 30. Additional information on the data collected and used as part of this evaluation are provided herein."

TETRA TECH

PITT-06-10-052

June 28, 2010

Project Number 112G00383

Mr. Matthew Audet
USEPA, Region 1
5 Post Office Square
Suite 100
Mail Code OSRR07-3
Boston, MA 02109-3912

Mr. Iver McLeod
Maine Department of Environmental Protection
State House Station 17
Augusta, Maine 04333-0017

Reference: Contract No. N62472-03-D-0057 (CLEAN)
Contract Task Order No. 55

Subject: Responses to MEDEP Comments on
Draft Engineering Evaluation/Cost Analysis (EE/CA) and Action Memorandum
for Non-Time-Critical Removal Action for Site 30 (Revision 2)
Portsmouth Naval Shipyard (PNS), Kittery, Maine

Dear Mr. Audet/Mr. McLeod:

On behalf of the U.S. Navy, Tetra Tech NUS, Inc. is pleased to provide to the U.S. Environmental Protection Agency Region I (USEPA) and to the Maine Department of Environmental Protection (MEDEP) 2 and 3 copies, respectively, of the subject documents.

Following receipt of USEPA comments, the Final EE/CA for Site 30 will be submitted.

If you have any comments or questions, or if additional information is required, please contact Ms. Linda Cole at 757.341.2011.

For the Community Restoration Advisory Board (RAB) members; if you have any comments or questions on these issues, they can be provided to the Navy at a RAB meeting, by calling the Public Affairs office at 207.438.1140 or by writing to:

Portsmouth Naval Shipyard
Public Affairs Office
Attn: Danna Eddy
Portsmouth, NH 03804-5000

Sincerely,

for

Deborah J. Cohen, P.E.
Project Manager

DJC/clm
Enclosure

Tetra Tech NUS, Inc.
661 Andersen Drive, Pittsburgh, PA 15220-2745
Tel 412.921.7090 Fax 412.921.4040 www.ttnus.com

TETRA TECH

Electronic Copy
NAVFAC MIDLANT. (Code OPTE3-2/L. Cole)
Mr. Doug Bogen
Ms. Michele Dionne
Ms. Mary Marshall
Mr. Peter Britz
NH Fish & Game (D. Grout)
Mr. Jon Carter
Mr. Tim Evans

Hard Copy
NAVFAC MIDLANT PWD ME (Code PRN4, M. Thyng) (1 copy and email)
Mr. Jack McKenna (1 copy)
Ms. Carolyn Lepage (1 copy)
Mr. Tim Smith (1 copy)
ME Dept. of Marine Resources (D. Nault)

Without Enclosure
Dr. Roger Wells
Mr. Onil Roy
PNS Code 100PAO (e-mail)
Y. Walker, NEHC
NOAA (K. Finkelstein)
U.S. Fish and Wildlife (K. Munney)
Ms. Diana McNabb (e-mail)
ATSDR (DOD-EJ/Carole Hossom)